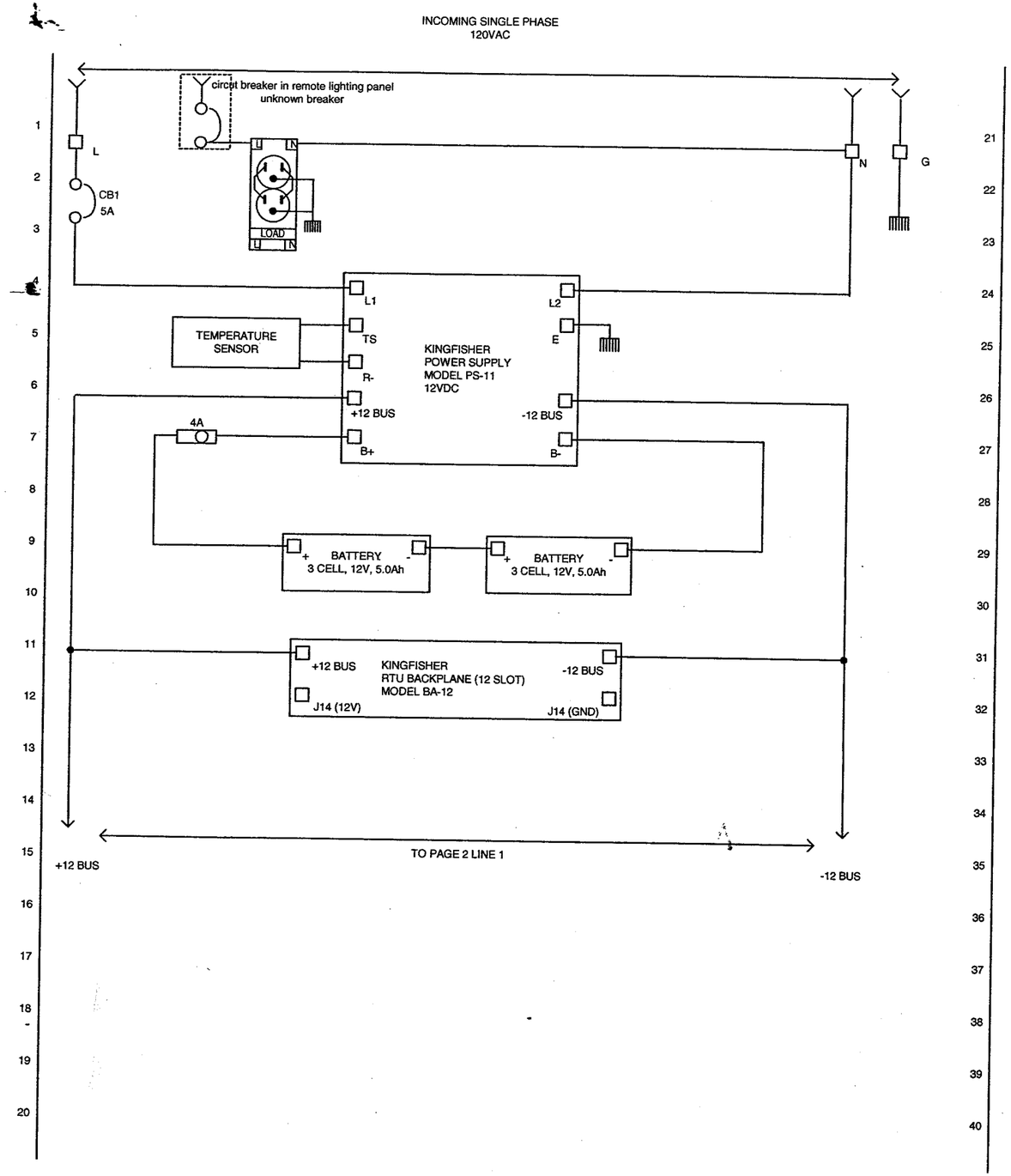

Reviewed By

Sheet Title	19TH STREET DIFFERENTIAL PRESSUEE		
Customer	EPA for the city of San Bernardino		
Project	Muscoy Growndwater Site	Job Number	CSB24489

ATSI
Advanced Telemetry Systems International, Inc.
P.O.461659 Escondido, CA 92046-1659 760.738.6804

Serial Number	Scale	Date	Revision	Drawn By
	N.S.	03/24/05	0	T. LaVine

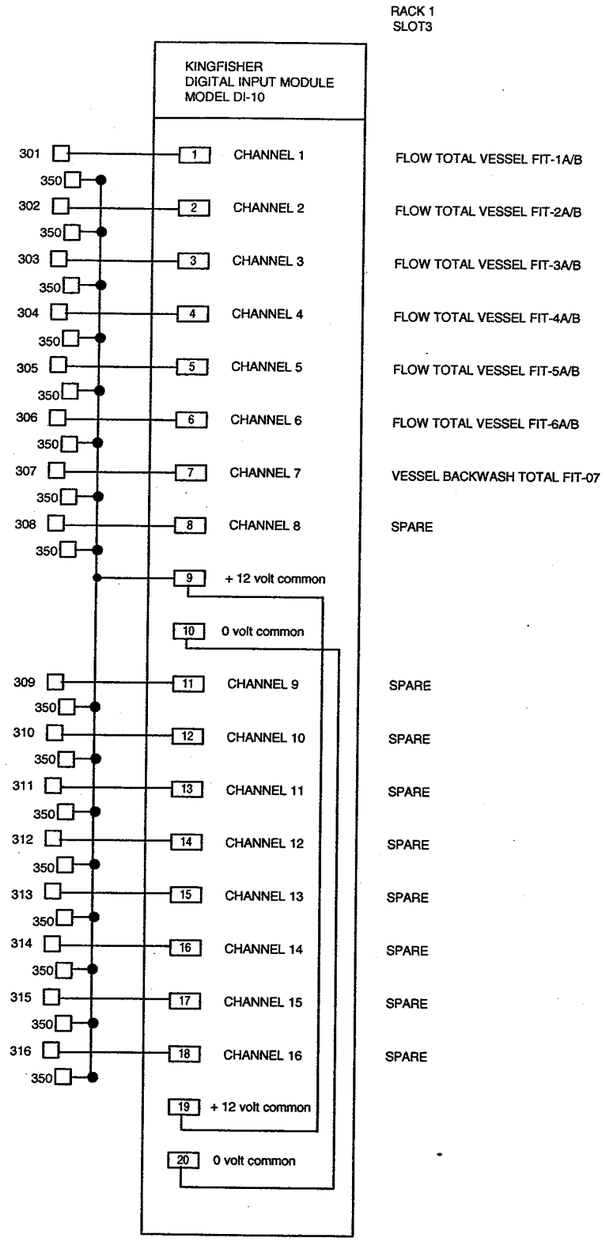

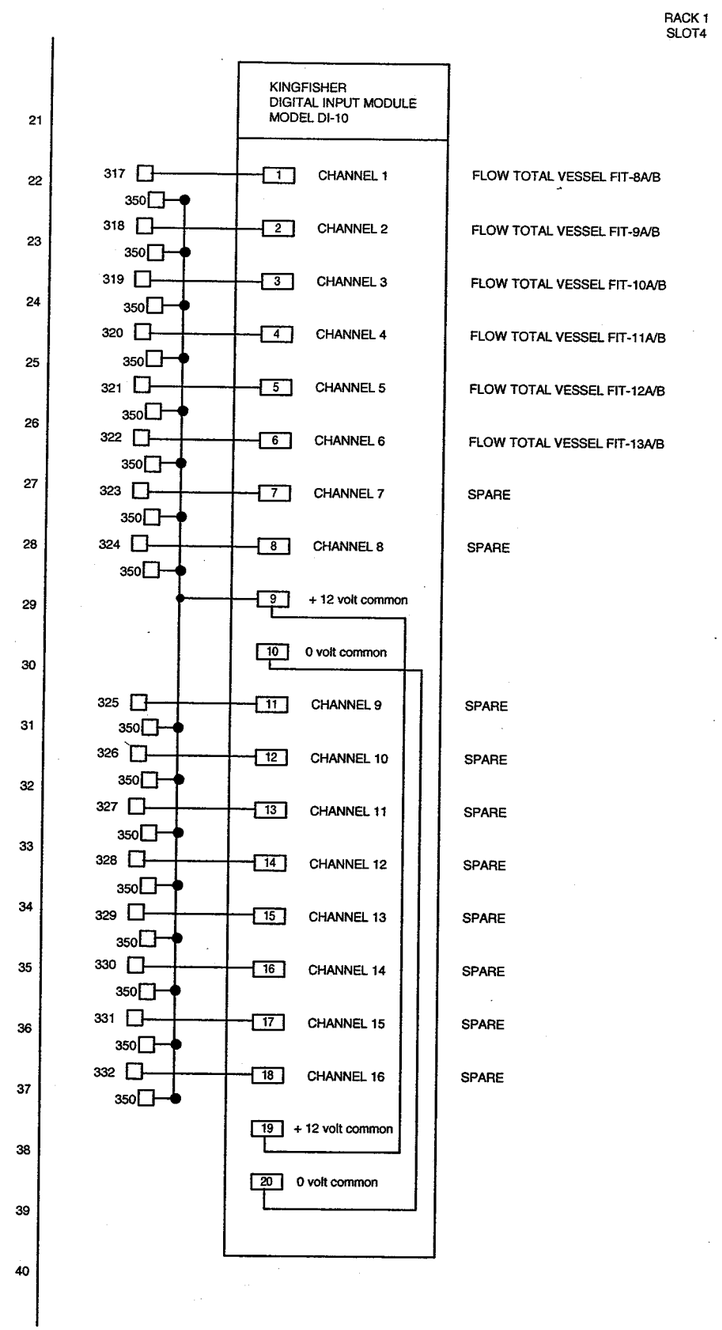

Sheet Title	**19th Street Differential pressure**			ATSI Advanced Telemetry Systems International, Inc. P.O.461659 Escondido, CA 92046-1659 760.738.6804	Serial Number	Scale	Date	Revision	Reviewed By
Customer	EPA for the city of San Bernardino					N.S.	03/24/05	0	Drawn By T. LaVine
Project	Muscoy Growndwater Site	Job Number	CSB24489						

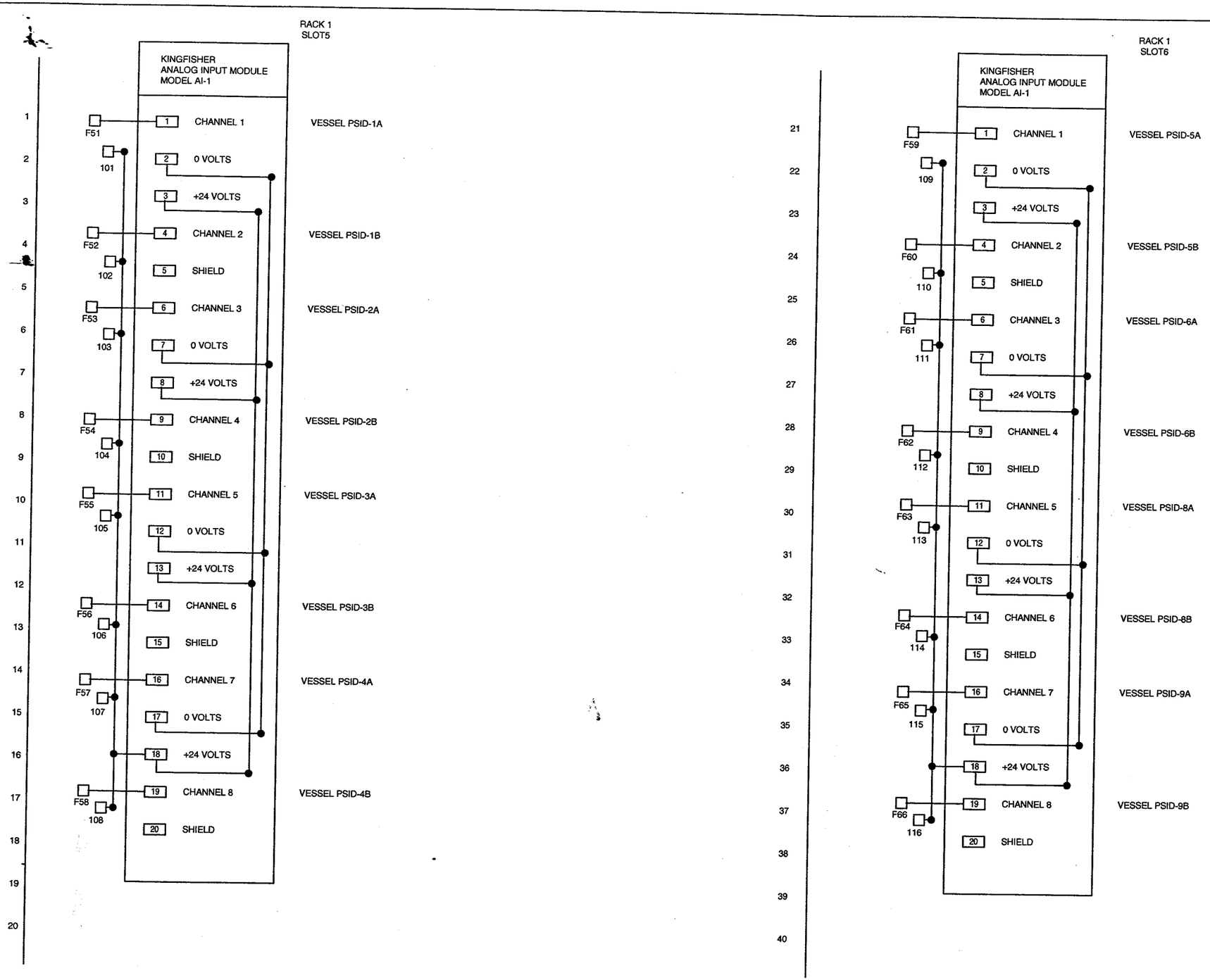

Sheet Title	19TH Street Differential Pressure			ATSI Advanced Telemetry Systems International, Inc. P.O.461659 Escondido, CA 92046-1659 760.738.6804	Serial Number	Scale	Date	Revision	Reviewed By
Customer	EPA for the city of San Bernardino					N.S.	03/24/05	0	Drawn By T. LaVine
Project	Muscoy Growndwater Site	Job Number	CSB 24489						

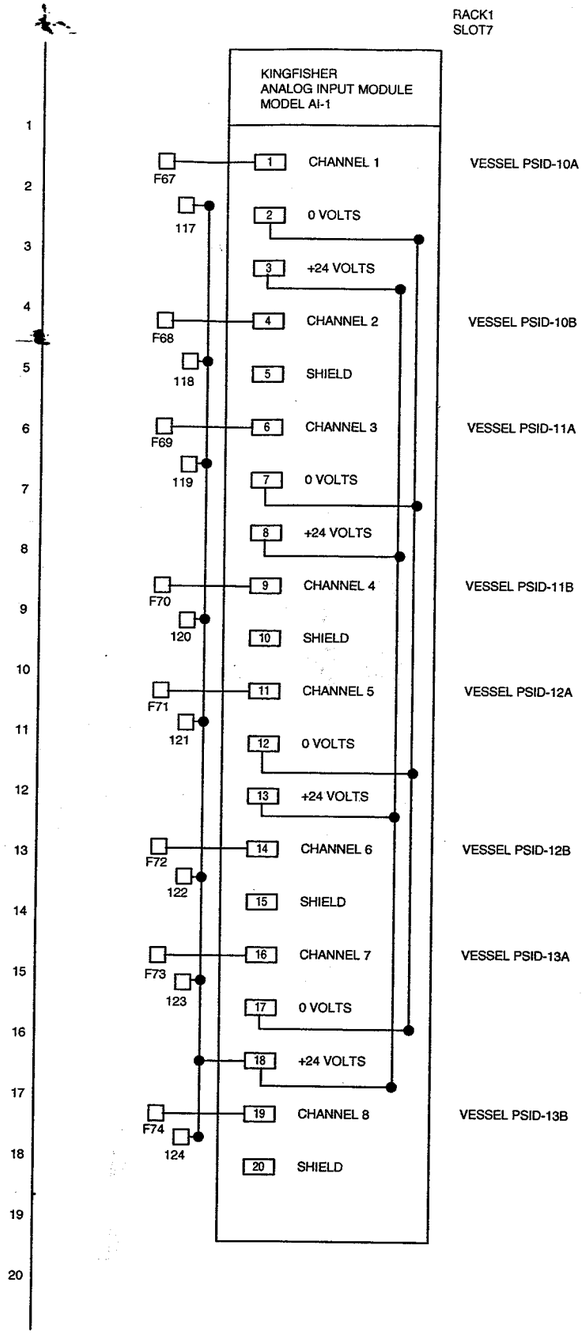

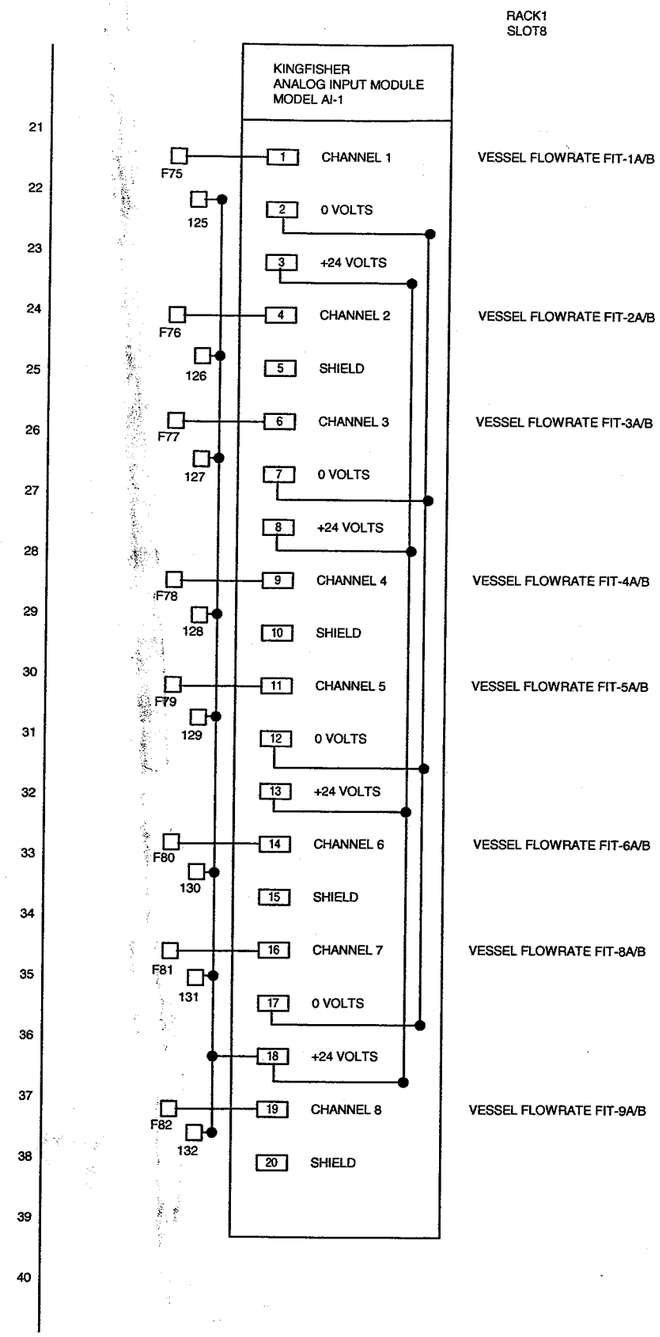

Reviewed By

Sheet Title	**19TH Street Differential Pressure**		
Customer	EPA for the city of San Bernardino		
Project	Muscoy Growndwater Site	Job Number	CSB 24489

ATSI
Advanced Telemetry Systems International, Inc.
P.O.461659 Escondido, CA 92046-1659 760.738.6804

Serial Number	Scale	Date	Revision	Drawn By
	N.S.	03/24/05	0	T. LaVine

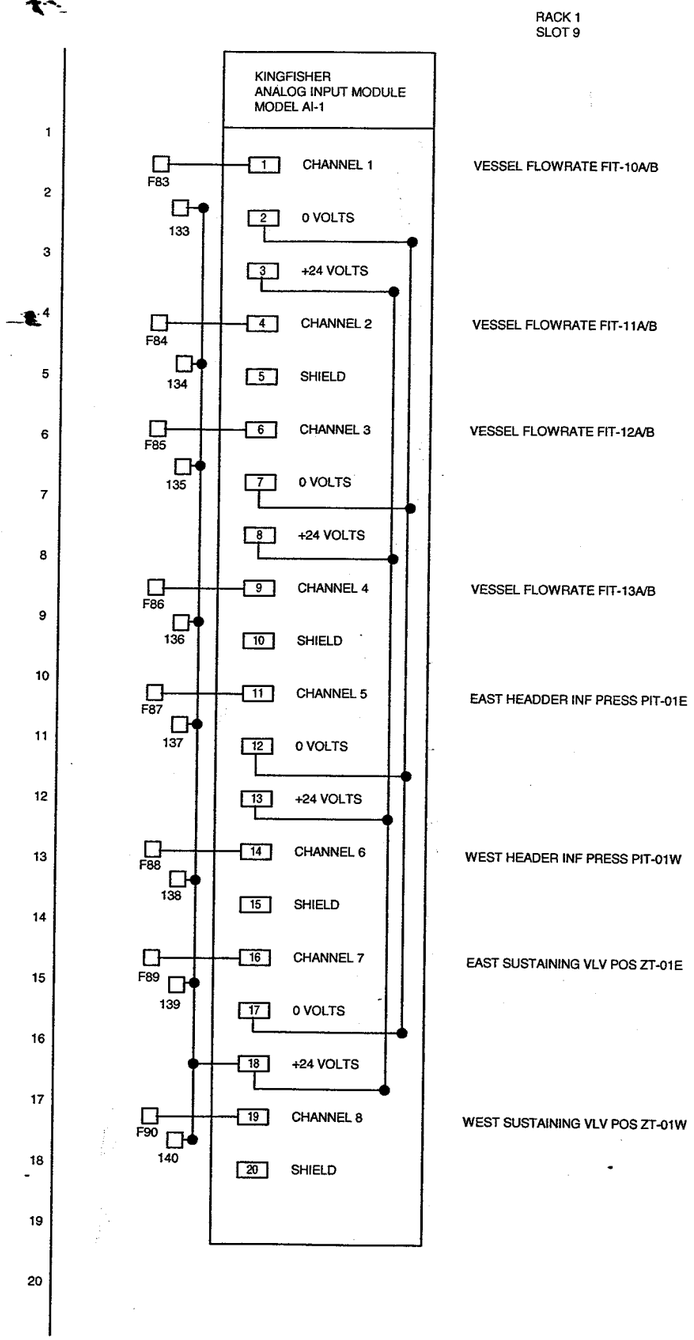

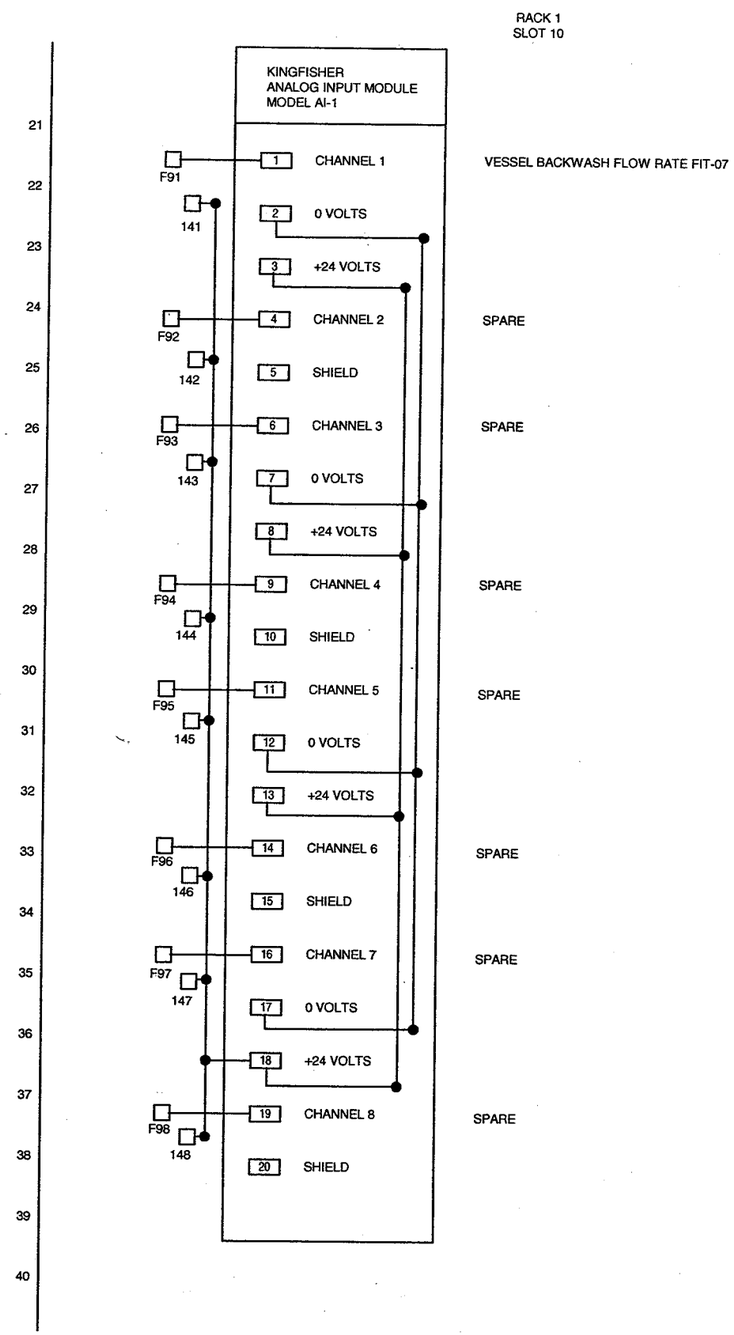

Reviewed By

Sheet Title	19TH Street Differential Pressure			ATSI Advanced Telemetry Systems International, Inc. P.O.461659 Escondido, CA 92046-1659 760.738.6804	Serial Number	Scale	Date	Revision	Drawn By
Customer	EPA for the city of San Bernardino					N.S.	03/24/05	0	T. LaVine
Project	Muscoy Growndwater Site	Job Number	CSB 24489						