From: Judith C. Chow, CASAC AAMM Subcommittee Member

Subject: Review of the Draft Federal Reference Method (FRM) for Lead in Pb-PM_{10} and Consultation of Approaches for the Development of A Low-Volume Ambient Air Monitor for Pb in Total Suspended Particulate (TSP) FRM or Federal Equivalent Method (FEM).

Date: July 15, 2008

This memo addresses the twelve questions on which the Subcommittee members were asked to comment regarding Attachment 1, "Draft Federal Reference Method (FRM) for Lead in PM_{10} (Pb-PM_{10}), and Attachment 2, "Approaches for the Development of a Low-Volume Ambient Air Monitor for Lead in Total Suspended Particulate (Pb-TSP) Sampler." This supplements prior comments to the first set of questions that was appended to the April 14, 2008 letter from Dr. Russell to Administrator Johnson.

1. QUESTIONS FOR ATTACHMENT 1 [DRAFT FEDERAL REFERENCE METHOD (FRM) FOR LEAD IN PM10 (PB-PM_{10}).]

1.1. Question 1: What are your comments on the use of the low-volume PM_{10c} FRM sampler as the Pb-PM_{10} FRM sampler?

My prior comments in the April 14 letter recommended that EPA move toward Pb-PM_{10}. These comments pointed out the lack of specificity and variability of inlet characteristics for the high-volume TSP sampler (Code of Federal Regulations, 2007a). High-volume TSP is a poor surrogate for inhalable particles and a poor surrogate for deposited particles. A true "Total Suspended Particulate" sampler that collects all of particles that remain in the air is of such large dimensions that it requires a small trailer and a large power supply to operate (Burton and Lundgren, 1987; Lundgren et al., 1984). The argument given in favor of retaining TSP in the April 14 letter was that large particles could contaminate surface areas and soils that might be ingested or resuspended. If toxic soils and house dust are of concern in addition to inhalable PM_{10}, then these should be sampled and analyzed directly (Egami et al., 1989; Adgate et al., 1998; Farfel et al., 2001; Bai et al., 2003).

FRM sampler inlets have been wind-tunnel tested and have well-defined cut-points and slopes (10.2 ± 1.41 μm for SA-246B inlet; Watson and Chow, 1993; 2001). Sampling systems coupled with these inlets provide accurate flow control, use low trace metal background PTFE Teflon-membrane filters, and yield precise mass measurements when coupled with appropriate laboratory weighing procedures. Low-volume PM_{10c} FRMs (Appendix O to Part 50) are similar to $PM_{2.5}$ FRMs, which use the same PM_{10} impactor inlet with the addition of WINS or very

sharp-cut cyclone inlets (Kenny et al., 2000; 2004; Peters et al., 2001a; 2001b; 2001c). The low-volume PM_{10c} FRM sampler is consistent with EPA's proposed difference method for $PM_{10-2.5}$ (U.S.EPA, 2006) that uses identical filter media, sample collection, gravimetric analysis, and quality assurance [QA]/quality control [QC]) procedures for the side-by-side samplers.

Low-volume PM_{10} and $PM_{2.5}$ samplers are commercially available, are widely deployed in many urban networks, and network operators are familiar with them. Costs for additional sampling and analysis should be reasonable. There is no need for a separate Pb-PM_{10} network, although the existing low-volume PM_{10} network might be expanded to suspected Pb hot-spots, as recommended by several committee members in the April 14 letter. The Pb-PM_{10} network should be considered within the context of EPA's integrated air monitoring strategy (Scheffe et al., 2007; U.S.EPA, 2005) that intends to re-design the national monitoring system to attain multiple objectives beyond compliance (Chow and Watson, 2008).

1.2. Question 2: What are your comments on the use of XRF as the Pb-PM_{10} FRM analysis method?

Energy dispersive x-ray fluorescence spectroscopy (XRF; NIOSH, 1998; U.S.EPA, 1999a; Watson et al., 1999a; RTI, 2004; DRI, 2007) is the most commonly used analytical method for multi-elemental analysis on Teflon-membrane filter samples, and the protocols always include Pb. XRF does not destroy the sample, so it can be archived and re-examined for stable particles by other methods (volatile aerosol components such as ammonium nitrate evaporate in XRF's evacuated sample chamber). XRF is currently used for $PM_{2.5}$ elemental analysis at urban locations in the Chemical Speciation Network (CSN), at non-urban locations in the Interagency Monitoring of PROtected Visual Environments (IMPROVE) network, and in many special studies.

Other methods have been proven to be equally sensitive, accurate, and precise for Pb measurements, including Proton Induced X-ray Emission Spectroscopy (U.S.EPA, 1999b), Atomic Absorption Spectroscopy (AAS) Code (Fernandez, 1989; NIOSH, 1994a; 1994b; U.S.EPA, 1999c; Code of Federal Regulations, 2007b), Inductively-Coupled Plasma Atomic Emission Spectroscopy (ICP-AES; U.S.EPA, 1999d; NIOSH, 2003a; 2003b; 2003c), Inductively-Coupled Plasma Mass Spectrometry (ICP-MS), and Anodic Stripping Voltametry (ASV; NIOSH, 2003d). These methods are commonly applied to air filters for Pb, especially in workplace environments and Hazardous Air Pollutant (HAPs) networks.

With adequate standard operating procedures (SOPs; such as those cited above), these methods give comparable results for a wide range of sample types and environments (Keppler et al., 1970; Gilfrich et al., 1973; Camp et al., 1974; 1978; Ahlberg and Adams, 1978; Nottrodt et al., 1978; Witz et al., 1982; Lin et al., 1993; Walder and Furuta, 1993; Pyle et al., 1996; Bettinelli et al., 1997; Reynolds et al., 1997; Watson et al., 1997; 1999b; 2000; Lemieux et al., 1998; Ashley et al., 1999; Rich et al., 1999; VanCott et al., 1999; Gigante and Gonsior, 2000; Sterling et al., 2000; Farfel et al., 2001; Harper et al., 2002; 2004; 2005; 2006; 2007; Menzel et al., 2002; Sussell and Ashley, 2002; Bai et al., 2003; Drake et al., 2003; Moreira et al., 2005; Ariola et al., 2006; Harper and Pacolay, 2006; Harris et al., 2006; Herner et al., 2006; Kilbride et al., 2006; Kim et al., 2007).

Figure 1 shows an example comparing Pb concentrations measured by AAS on high-volume PM_{10} quartz-fiber filter analyzed by the Illinois Department of Environmental Quality with Pb by XRF on the summed fine and coarse Teflon-membrane filters from a collocated dichotomous sampler analyzed by DRI. The results are comparable, with a few outliers. These monitors from South Chicago were in a highly industrialized area with relatively high levels of arsenic (As), selenium (Se) and other potentially toxic elements. Refined Pb is amenable to a common acid extraction methods, such as nitric acid and aqua-regia, which is not the case for most minerals (and possibly not for Pb in its native ore prior to refining). The comparisons for other toxic elements in Watson et al. (2000) are not as good as those for Pb.

Although a method may be shown to yield quantities comparable with reference materials and analyses by other methods, it may be inadequate if the equipment and procedures are not up to the task. Each SOP should state its assumptions and include tests to indicate when deviations from those assumptions are excessive. The procedure should attempt to minimize the effects of interferences or sample deviations from the ideal. The ability of an XRF procedure to attain a 1 ng/m^3 Pb detection limit depends on the filter mass (which affects the background count), sample volume, sample duration, and deposit area. It also depends on the Pb excitation radiation energy, intensity, beam area, and analysis time. The sensitivity and resolution of the SiLi detector is an important consideration, as well as peak overlap that will raise the background (which decreases the analysis precision). There are different, but analogous, considerations for the other methods cited above.

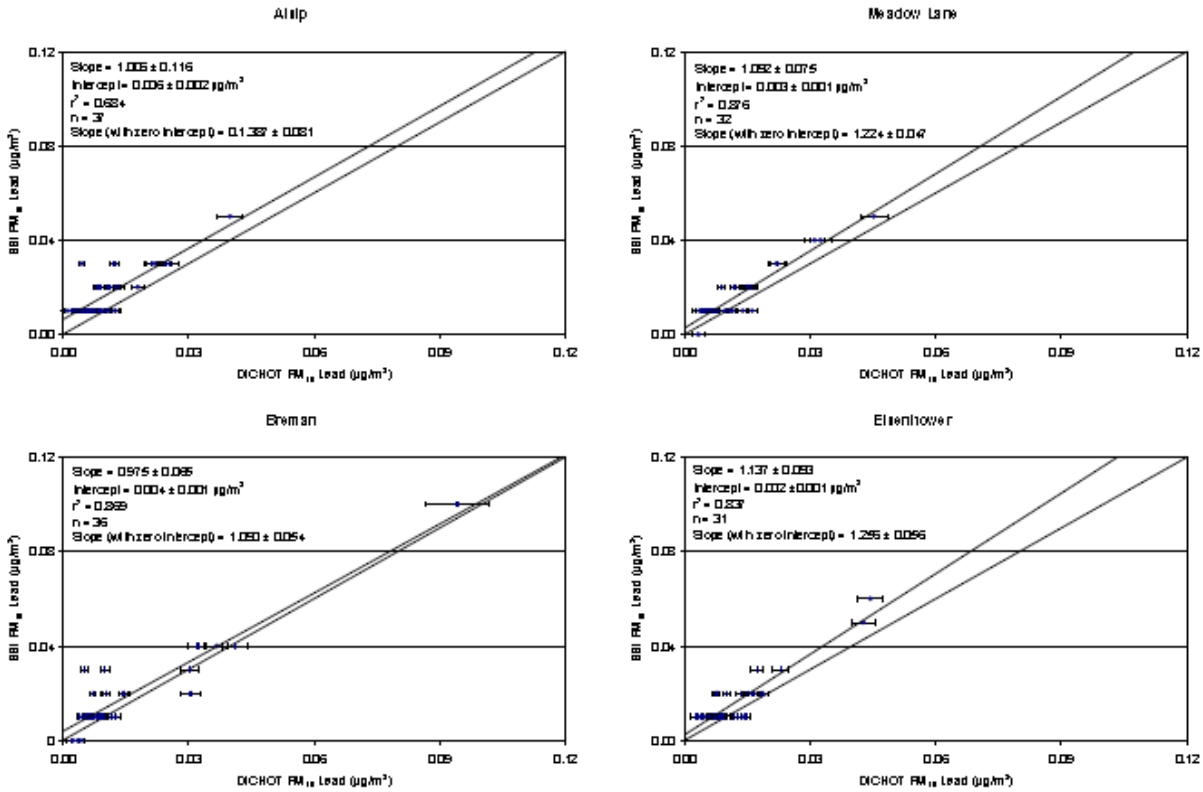

Figure 1. Comparison of PM_{10} lead concentrations from an Andersen high-volume PM_{10} on QMA quartz-fiber filters analyzed by AAS and a Sierra 241 dichotomous $PM_{10}/PM_{2.5}$ sampler with Teflon-membrane filters analyzed by XRF (Watson et al., 1999a) at the four sites during the third year of the Robbins Particulate Study in South Chicago between 10/01/97 and 09/26/98 (Watson et al., 2000).

As long as the minimum detectable limits (MDLs; 1.5 ng/cm^2), precision (±15% at 90% confidence level), and accuracy (±5%) are within the EPA's specified levels, any of the methods cited above should be adequate. That said, XRF and/or proton induced x-ray emission (PIXE) can simultaneously acquire 40-50 elements without much additional cost (except for the cost of acquiring additional standards, performing instrument calibration, and data processing). If only Pb is desired, most of the multi-element excitation conditions can be dropped, thereby increasing throughput and further lowering costs. The issues of extraction efficiency, use of different acid mixtures for extraction, matrix interferences, potential contamination, and sample destruction inherent in AAS, ICP-AES, ICP-MS, and ASV result in these methods being more costly, but they may be of use in some instances. For example, ICP-MS can quantify Pb isotopic abundances that might be of use in quantifying source contributions (Munksgaard and Parry, 1998).

1.3. Question 3. What are your comments on the specific analysis details of the XRF analysis method contained in the proposed Pb-PM_{10} FRM analysis method description?

While the method description in Appendix Q to Part 50, "Reference Method for the Determination of Lead in Particulate Matter as PM_{10} Collected From Ambient Air" covers many details, there are several points that need clarification:

Section 1.1 (Line 2). PM_{10} should be collected on an "acceptance tested" 46.2 mm diameter polytetrafluoroethylene (PTFE) filter. Acceptance testing is performed to verify blank levels for Teflon-membrane filters. In the early 1970s, one batch of Teflon-membrane filters was contaminated with Pb from the manufacturer, and this compromised the study results (Chow, 1995a).

Section 1.1 (Lines 7 and 8). The definition of PM_{10} should include a specific inlet efficiency curve with a 50% cut-point and slope, similar to the PM_{10} FRM specification (U.S.EPA, 1987).

Section 1.4 (Line 1). Is it necessary to specify "electrically powered"? I don't see any problem with other vacuum assisted suction methods as long as the flow rate specifications are attained. Photovoltaic cells and batteries are also sources of electricity.

Section 1.4 (Line 8). Change "Line intensity" to "photon energy".

Section 2.1 (Line 3). The deposit area on ringed Teflon-membrane filters varies slightly from different speciation samplers (e.g., 11.76 – 11.78 cm^2), and it is smaller than the 11.86 cm^2 estimated for the Pb-PM_{10} FRM sampler. It would be better if the deposit area is measured from several samplers and sample batches to assure that the correct value is being used.

Section 2.2 (Lines 4-5). "The one-sigma detection limit for Pb is calculated as the average overall uncertainty or propagated error for Pb, determined from measurements on a series of blank filters." This should be more explicit, i.e., translate the square root of the number of counts from a series of blank filters near the Pb analysis energies into $\mu g/m^3$ using the XRF calibration factor (µg/count), sample volume, and deposit area. The one-sigma detection limit is best based on each batch of unexposed blank filters to account for batch-to-batch variations. Even though these variations are expected to be small, it is a better practice to ensure consistency among different batches of filters. This might be incorporated into the acceptance testing criteria.

Section 3.1 (Lines 1 and 3). Define "too much deposit" (Line 1) and "heavy deposit" (Line 3). This shouldn't be a problem with XRF, because Pb has a strong energy and is not much affected by particle size or sample deposit (Criss and Birks, 1968; Hunter and Rhodes, 1972; Rhodes and Hunter, 1972; Dzubay and Nelson, 1975; Adams and Billiet, 1976). One could require a calculation of self-adsorption and the loading at which it might exceed the measurement tolerances using one or more of the cited methods.

Section 3.1 (Line 5). While an optimum PM_{10} filter loading of 150 $\mu g/cm^2$ or 1.6 mg/filter is reasonable for a 46.2 mm filter with a low-volume (16.7 L/min) sampler, this value needs to be justified with a citation. The same is true for the minimum deposit of 15 $\mu g/cm^2$ (Line 7). An optimal loading estimate might be required to be part of the procedures, again using published formulae.

Section 3.1 (Lines 8-10). Deposit non-uniformity may occur if an in-line filter holder is used, but in-line filter holders are not part of PM_{10} low-volume samplers. The deposits are very uniform with these samplers, as evidenced by their appearance. Modern XRF equipment also rotates the sample, and the incident beam is at an off-center angle, thereby lessening the effects of a non-uniform deposit. Deposit uniformity might be defined by a performance specification of some kind and be addressed in the SOP.

Section 3.2 (Line 11). "Energy resolution" should be defined as < 155-160 eV full-width at half maximum..

Section 4.1 (Line 4). A CV of 15% is high. Typically, precision can be much better than ±10%.

Section 6.1.2. (Lines 4-5). Selecting 50 out of 500 filters, or 10% of blank filters, for acceptance testing is more than is needed. Two filters out of a hundred are more reasonable and cost-effective.

Section 6.1.2 (Line 8). Where did 4.8 ng Pb/cm^2 come from? Based on the past records, 1-3 ng Pb/cm^2 seems to be a more adequate acceptance level, but this needs to be validated with a citation.

Section 6.2.1 (Lines 2 and 3). The method should not imply that Thermo and PANalytical, are the only units. UC Davis designed and operates its own system for IMPROVE samples, and it seems to work fine. I believe EPA is still using the old LBL workhorse in its RTP labs. Xenemetrix (new owners of Jordan Valley, www.xenemetrix.com/index.htm) and Spectro (www.spectro.com/pages/e/index.htm) also have XRF units adaptable to this purpose.

Section 6.2.2 (Lines 1-4). Both 15 and 50 µg/cm^2 Pb thin film standards can be obtained from Micromatter Inc. (Arlington, WA). NIST (2008) also has a Pb standard solution, standard reference material (SRM) 3128 with certified Pb value of 9.987 ± 0.018 mg/g, or other SRMs in different matrices that might be applicable to assessing accuracy and precision.

Section 6.2.4 (Line 17). "Calibration is performed only when significant repairs occur or when a change in fluorescers, X-ray tubes, or detector is made." Most XRFs are robust and may not need repairs for years. QA standards with each run monitor intensities and peak separations. Nevertheless, it's a good idea to perform base calibrations at least once per year, and to use the L_β line as a secondary peak to verify Pb by the L_α line.

Section 6.2.4.2 (Lines 3-4). Rather than keeping 20-30 filters as clean blank filters, it is better to retain 2% of every new batch of filters (i.e., 100 per batch) for acceptance testing (see above comment on Section 6.1.2).

1.4. Question 4. Do you think the precision, bias and MDL of the XRF method for the proposed Pb range will be adequate?

Yes, with the appropriate samples and procedures. Arsenic (As) and other spectral interferences can be estimated and corrected, and this is commonly done using the Pb L_β as well as the Pb L_α to quantify Pb levels. A quick calculation shows that if As levels were so high as to overwhelm the Pb lines, then Pb exposure would not be the biggest problem. The deposit inhomogeneity reported by Bandhu et al. (2000) were caused by their use of in-line filter holders. Chow (1995b) shows pictures of samples from in-line filter holders, demonstrating that you

don't need a lot of analysis to know when the deposit is non-uniform. The aerosol sampler (Fitz et al., 1989) used in the Southern California Air Quality Study (SCAQS) used in-line filter holders and required some extra effort to adjust the elemental data (Cahill et al., 1989; Chow et al., 1994; Matsumura and Cahill, 1991) for subsequent interpretation. None of the samplers under consideration use in-line filter holders, and all of them have a long-enough transition zone to assure a uniform deposit. The good comparability reported in most of the studies cited above could not be achieved if this were not the case.

1.5. Question 5. Are there any method interferences that we have not considered?

XRF spectrum processing methods are well-established for thin samples, and most of the newer analyzers have software that can implement several of the most common approaches to background subtraction, peak overlap correction, self-absorption (not really needed for Pb), coincidence counting, and deadtime corrections. The software implements well-established and non-proprietary methods (Bonner et al., 1973; Dzubay et al., 1977; Giauque et al., 1977; Grennfelt et al., 1971; Lubecki, 1969; Parkes et al., 1974; Russ, 1977; Statham, 1976; Statham, 1977) that can be applied to any digitized spectrum.

2. QUESTIONS FOR ATTACHMENT 2 [APPROACHES FOR THE DEVELOPMENT OF A LOW-VOLUME AMBIENT AIR MONITOR FOR LEAD IN TOTAL SUSPENDED PARTICULATE (PB-TSP) SAMPLER]

As noted several times before, TSP is defined by the dimensions and flow rates of the high-volume sampler, and even these vary substantially from sampler to sampler. We now have a better understanding of the inlets, flow controls, filter media, passive deposition, and wind speed/direction dependencies (McKee et al., 1971; Clements et al., 1972; Smith and Nelson, Jr., 1973; Chahal and Hunter, 1976; Benarie, 1977; Wedding et al., 1977; Blanchard and Romano, 1978; U.S.EPA, 1982; 1983; van der Meulen et al., 1984; Watson et al., 1989; Code of Federal Regulations, 2007a). A true TSP sampler (i.e., one that collects all of the suspended particles), would look like Figure 2, which is unlikely to be practical for most situations.

1.6. Question 1. Would a low-volume Pb-TSP sampler be an improvement over the existing high-volume Pb-TSP sampler? What advantages and disadvantages do you see associated with a low-volume Pb-TSP sampler?

No, because a low-volume sampler is unlikely to represent high-volume TSP. A low-volume TSP inlet would probably be symmetrically designed (e.g., a round cap on top of a round

pipe). This would remove the inherent bias with respect to wind direction that is present in the asymmetric peaked roof high-volume TSP inlet. One must also decide on the roof dimensions and the gap between the peaked roof and the sampler body. Code of Federal Regulations (2007a) states: "The absolute accuracy of the method is undefined because of the complex nature of atmospheric particulate matter and the difficulty in determining the ''true'' particulate matter concentration." The inlet is defined as follows: "The sampler cover or roof shall overhang the sampler housing somewhat…and shall be mounted so as to form an air inlet gap between the cover and the sampler housing walls. This sample air inlet should be approximately uniform on all sides of the sampler. The area of the sample air inlet must be sized to provide an effective particle capture air velocity of between 20 and 35 cm/sec at the recommended operational flow rate." With respect to flow rate, the specification is 1,100 to 1,700 L/min. How is anyone going to define, let alone duplicate, the size collection properties of such a poorly defined inlet?

Figure 3 compares collocated measurements from TSP high-volume samples with medium-volume samples acquired with a sequential filter sampler (SFS; U.S.EPA, 1989). To emulate TSP, the SFS plenum and inlet were removed and each 47 mm filter holder was covered with a PVC end-cap to emulate the air velocity through the gap between the high-volume peaked roof and sampler body (20 to 35 cm/sec, as noted above). Average efficiencies ranged from 66% to 106% with most of them being ~80%. This is the only test I am aware of that tried to emulate the peaked roof high-volume sampler inlet with another device.

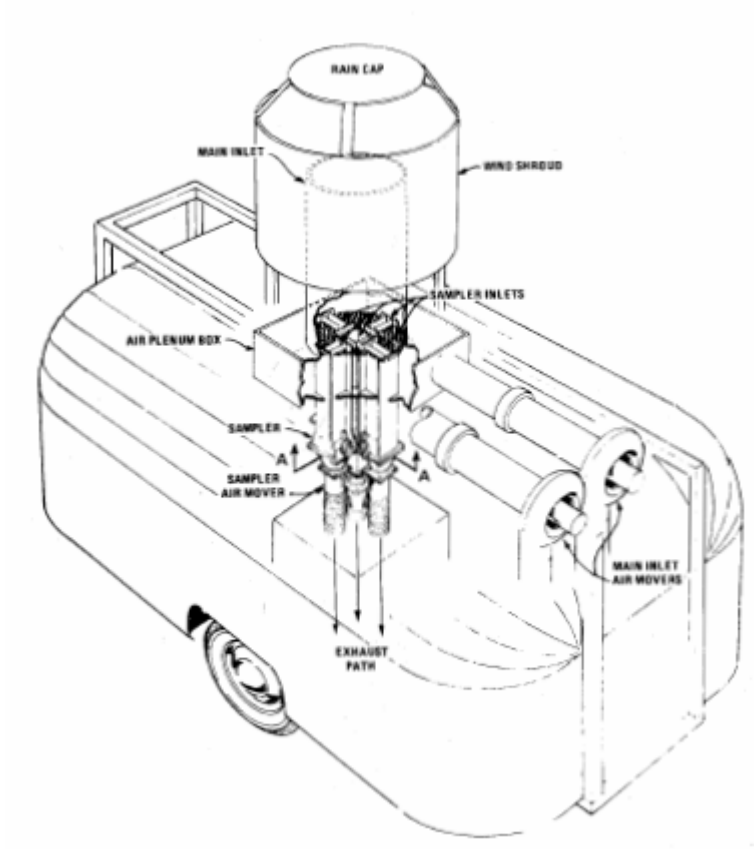

Figure 2. Schematic of the Wide Range Aerosol Classifier (Burton and Lundgren, 1987) designed to sample total suspended particulate, as opposed to TSP which is imprecisely defined by an imprecisely specified high-volume sampler with a peaked roof inlet.

Table 4.4.1 Average Collection Efficiencies of ERT Samplers with Respect to Hi-Vol Measurements

Season	Site	Total HiVol $\mu g/m^3$	Total ERT % of Total HiVol	Fine ERT % of Total HiVol	Fine HiVol % of HiVol
SUMMER	1	52	83	23	41
	2	65	75	39	44
	3	60	74	30	37
	4	76	75	28	35
	5	56	86	31	34
	6	36	82	41	41
AUTUMN	1	38	89	47	44
	2	88	72	33	37
	3	76	79	32	42
	4	100	81	29	34
	5	66	96	39	40
	6	39	80	45	49
WINTER	1	28	93	49	49
	2	79	78	34	36
	3	69	92	39	43
	4	85	83	31	37
	5	63	93	38	85*
	6	19	79	44	42
SPRING	1	40	79	49	39
	2	102	66	28	38
	3	92	86	26	36
	4	158	84	20	29
	5	87	106	34	38
	6	55	92	34	34
AVERAGE			83	35	39

*Outlier not included in Average

Figure 3. Column 4 compares medium-volume sequential filter sampler TSP (113 L/min) with peaked roof high-volume (1130 L/min) TSP for six sites in Portland, OR during 1977 (Watson, 1979).

1.7. Question 2. What inlet designs would be best suited for a low volume Pb-TSP sampler? What designs are not appropriate for a low-volume Pb-TSP sampler?

Replacing the current inlet with a non-symmetric (rectangular?) cap that attempts to emulate the 20 to 35 cm/sec flow rate through the annulus is the most logical approach, but I don't expect it to emulate a collocated high-volume measurement any better than the results of Figure 3. Computational Fluid Dynamics (CFD) models could be applied to the peaked roof high-volume sampler, as they have been to other inlets (Anthony and Flynn, 2006; Hu et al., 2007), to figure out what is going on and how to emulate properties at lower flow rates, but I don't think it's worth it.

1.8. Question 3. What is your preferred approach for the development of a low-volume Pb-TSP sampler, and why?

My preferred approach is to abandon TSP as an indicator of Pb inhalability and to stick with PM_{10}. Add sampling and analysis of deposits in soil or house dust if one is concerned about the ingestion of toxic dust.

1.9. Question 4. If the EPA were to develop a low-volume Pb-TSP FRM, how important is it that the sampling capture efficiency be characterized for varying particle sizes?

EPA would need to determine the 50% cut-point and slope for the inlet and define how it varies for different wind speeds and directions, meeting the same testing requirements that are in place for PM_{10} and $PM_{2.5}$ inlets with current technology.

1.10. Question 5. If the EPA were to develop a low-volume Pb-TSP FRM, should the new FRM replace the existing high-volume Pb-TSP FRM, or should the EPA maintain the existing FRM?

A better designed and characterized low-volume sampler should replace the existing high-volume Pb-TSP FRM. At the very least, the inlet should be symmetrical so that wind direction is not an issue. It would be better to have a consistent inlet and have comparable data than to continue with the 1950s high-volume technology that was developed before we understood the importance of particle size cuts.

EPA set the precedent when it switched from high-volume defined TSP to performance-defined PM_{10} in the late 1980s, so this issue shouldn't be all that controversial. With respect to health impacts, one should separate ingestion from inhalable particles. For areas with heavy deposition of Pb-contaminated dust, special studies should be conducted. This is not the case in most compliance networks, however.

1.11. Question 6. Is it appropriate to accept alternative sampler and inlet designs as FEM?

Yes, as well as laboratory analysis methods mated to sampler designs. Performance criteria and ways to verify compliance with them should be specified in the method, not specific pieces of hardware (Chow, 1995a; Chow and Watson, 2008)

1.12. Question 7. Are the proposed FEM testing criteria for Pb methods adequate to ensure equivalence of alternative sampler and inlet designs? If not, what additional testing requirements should be considered?

Even though the criteria are less stringent for FEMs as compared to FRMs, I don't agree with EPA's notion that "there is no need to perform wind tunnel tests to characterize sampler capture efficiency." One might change the word "sampler" to "inlet", as this is the key

component when defining the size fraction. Since high-volume TSP is ill-defined, low-volume TSP needs to be better defined.

3. REFERENCES

Adams, F.C.; and Billiet, J. (1976). Experimental verification of the X-ray absorption correction in aerosol loaded filters. *X-Ray Spectrometry*, **5**(4):188.

Adgate, J.L.; Willis, R.D.; Buckley, T.J.; Chow, J.C.; Watson, J.G.; Rhoads, G.G.; and Lioy, P.J. (1998). Chemical mass balance source apportionment of lead in house dust. *Enivron. Sci. Technol.*, **32**(1):108-114.

Ahlberg, M.S.; and Adams, F.C. (1978). Experimental comparison of photon and particle-induced X-ray emission analysis of air particulate matter. *X-Ray Spectrometry*, **7**(2):73.

Anthony, T.R.; and Flynn, M.R. (2006). Computational fluid dynamics investigation of particle inhalability. *J. Aerosol Sci.*, **37**(6):750-765.

Ariola, V.; D'Alessandro, A.; Lucarelli, F.; Marcazzan, G.; Mazzei, F.; Nava, S.; Garcia-Orellana, I.; Prati, P.; Valli, G.; Vecchi, R.; and Zucchiatti, A. (2006). Elemental characterization of PM_{10}, $PM_{2.5}$ and PM_1 in the town of Genoa (Italy). *Chemosphere*, **62**(2):226-232.

Ashley, K.; Song, R.G.; Esche, C.A.; Schlecht, P.C.; Baron, P.A.; and Wise, T.J. (1999). Ultrasonic extraction and portable anodic stripping voltammetric measurement of lead in paint, dust wipes, soil, and air: An interlaboratory evaluation. *J. Environ. Monit.*, **1**(5):459-464.

Bai, Z.P.; Yiin, L.M.; Rich, D.Q.; Adgate, J.L.; Ashley, P.J.; Lioy, P.J.; Rhoads, G.G.; and Zhang, J.F. (2003). Field evaluation and comparison of five methods of sampling lead dust on carpets. *AIHA Journal*, **64**(4):528-532.

Bandhu, H.K.; Puri, S.; Garg, M.L.; Singh, B.; Shahi, J.S.; Mehta, D.; Swietlicki, E.; Dhawan, K.D.; Mangal, P.C.; and Singh, N. (2000). Elemental composition and sources of air pollution in the city of Chandigarh, India, using EDXRF and PIXE techniques. *Nuclear Instruments and Methods in Physics Research*, **160**(1):126-138.

Benarie, M.M. (1977). Continuous sampling of urban suspended matter over large grain size spectrum - Validity of the Hivol sampler and other results. *Atmos. Environ.*, **11**:527-529.

Bettinelli, M.; Baroni, U.; Bilei, F.; and Bizzarri, G. (1997). Characterization of SCR-DENOx materials by ICP-MS and ICP-AES: Comparison with XRF and NAA. *Atomic Spectroscopy*, **18**(3):71-79.

Blanchard, G.E.; and Romano, D.J. (1978). High volume sampling: Evaluation of an inverted sampler for ambient TSP measurement. *J. Air Poll. Control Assoc.*, **28**(11):1142-1145.

Bonner, N.A.; Bazan, F.; and Camp, D.C. (1973). Elemental analysis of air filter samples using x-ray fluorescence. Report No. UCRL-51388. Prepared for U.S. Atomic Energy Commission, by Univ. of Calif., Lawrence Livermore Laboratory, Livermore, CA.

Burton, R.M.; and Lundgren, D.A. (1987). Wide-Range Aerosol Classifier - A size selective sampler for large particles. *Aerosol Sci. Technol.*, **6**(3):289-301.

Cahill, T.A.; Matsumura, R.T.; Perley, B.; Eldred, R.A.; Wilkinson, K.; and Kusko, B.H.(1989). Total elemental analysis of filters in SCAQS, Anaheim, CA. Proceedings, 82nd Annual Meeting of the Air & Waste Management Association, Pittsburgh, PA.

Camp, D.C.; Cooper, J.A.; and Rhodes, J.R. (1974). X-ray fluorescence analysis results of a first round intercomparison study. *X-Ray Spectrometry*, **3**:47.

Camp, D.C.; van Lehn, A.L.; and Rhodes, J.R. (1978). Intercomparison of trace element determinations in simulated and real air particulate samples. *X-Ray Spectrometry*, **4**:123.

Chahal, H.S.; and Hunter, D.C. (1976). High volume air sampler: An orifice meter as a substitute for a rotameter. *J. Air Poll. Control Assoc.*, **26**(12):1171-1172.

Chow, J.C.; Fujita, E.M.; Watson, J.G.; Lu, Z.; Lawson, D.R.; and Ashbaugh, L.L. (1994). Evaluation of filter-based aerosol measurements during the 1987 Southern California Air Quality Study. *Environ. Mon. Assess.*, **30**(1):49-80.

Chow, J.C. (1995a). Critical review: Measurement methods to determine compliance with ambient air quality standards for suspended particles. *J. Air Waste Manage. Assoc.*, **45**(5):320-382.

Chow, J.C. (1995b). Summary of the 1995 A&WMA critical review: Measurement methods to determine compliance with ambient air quality standards for suspended particles. *EM*, **1**(May):12-15.

Chow, J.C.; and Watson, J.G. (2008). New directions: Beyond compliance air quality measurements. *Atmos. Environ.*, **42**(21):5166-5168.

Clements, H.A.; McMullen, T.B.; Thompson, R.J.; and Akland, G.G. (1972). Reproducibility of the hivol sampling method under field conditions. *J. Air Poll. Control Assoc.*, **22**(12):955-958.

Code of Federal Regulations (2007a). Appendix B to Part 50-Reference method for the determination of suspended particulate matter in the atmosphere (high volume method). *CFR*, **40**(50):26-38. http://frwebgate1.access.gpo.gov/cgi-bin/PDFgate.cgi?WAISdocID=05434191166+1+1+0&WAISaction=retrieve.

Code of Federal Regulations (2007b). Appendix G to Part 50-Reference Method of the determination of lead in suspended particulate matter collected from ambient air. *CFR*, **40**(50):57-63. http://frwebgate1.access.gpo.gov/cgi-bin/PDFgate.cgi?WAISdocID=05434191166+1+1+0&WAISaction=retrieve.

Criss, J.W.; and Birks, L.S. (1968). Calculation methods for fluorescent X-ray spectrometry. Empirical coefficients vs. fundamental parameters. *Anal. Chem.*, **40**(7):1080-1086.

Drake, P.L.; Lawryk, N.J.; Ashley, K.; Sussell, A.L.; Hazelwood, K.J.; and Song, R.G. (2003). Evaluation of two portable lead-monitoring methods at mining sites. *Journal of Hazardous Materials*, **102**(1):29-38.

DRI (2007). DRI SOP 2-209r3: X-ray fluorescence (XRF) analysis of aerosol filter samples (PANalytical Epsilon 5). Prepared by Desert Research Institute, Reno, NV.

Dzubay, T.G.; Lamothe, P.J.; and Yoshuda, H. (1977). Polymer films as calibration standards for X-ray fluorescence analysis. *Adv. X-Ray Anal.*, **20**:411.

Dzubay, T.G.; and Nelson, R.O. (1975). Self absorption corrections for X-ray fluorescence analysis of aerosols. In *Advances in X-Ray Analysis, Vol. 18*, W.L. Pickles, C.S. Barrett, J.B. Newkirk, and C.O. Rund, Eds. Plenum Publishing Corporation, New York, NY, pp. 619-631.

Egami, R.T.; Watson, J.G.; Rogers, C.F.; Ruby, M.G.; Rood, M.J.; and Chow, J.C. (1989). Particle fallout container measurement of dustfall from the atmosphere. In *Methods of Air Sampling and Analysis,* 3 ed., J.P. Lodge, Ed. Lewis Publishers, Chelsea, MI, pp. 440-445.

Farfel, M.R.; Orlova, A.O.; Lees, P.S.J.; Bowen, C.; Elias, R.; Ashley, P.J.; and Chisolm, J.J., Jr. (2001). Comparison of two floor mat lead dust collection methods and their application in pre-1950 and new urban houses. *Environ. Sci. Technol.*, **35**(10):2078-2083.

Fernandez, F.J. (1989). Atomic absorption spectroscopy. In *Methods of Air Sampling and Analysis,* 3 ed., J.P. Lodge, Jr., Ed. Lewis Publishers, Chelsea, MI, pp. 83-89.

Fitz, D.R.; Chan, M.; Cass, G.R.; Lawson, D.R.; and Ashbaugh, L.L.(1989). A multi-component size-classifying aerosol and gas sampler for ambient air monitoring, Anaheim, CA. Proceedings, 82nd Annual Meeting of the Air & Waste Management Association, Pittsburgh, PA.

Giauque, R.D.; Garrett, R.B.; and Goda, L.Y. (1977). Calibration of energy-dispersive X-ray spectrometers for analysis of thin environmental samples. In *X-Ray Fluorescence Analysis of Environmental Samples*, T.G. Dzubay, Ed. Ann Arbor Science Publishers, Ann Arbor, MI, pp. 153-181.

Gigante, G.E.; and Gonsior, B. (2000). Comparison of different excitation methods for X-ray spectral analysis: the case of synchrotron radiation. *Fresenius Journal of Analytical Chemistry*, **368**(7):644-648.

Gilfrich, J.V.; Burkhalter, P.G.; and Birks, L.S. (1973). X-ray spectrometry for particulate air pollution - A quantitative comparison of techniques. *Anal. Chem.*, **4**:2002.

Grennfelt, P.; Akerstrom, A.; and Brosset, C. (1971). Determination of filter-collected airborne matter by X-ray fluorescence. *Atmos. Environ.*, **5**(1).

Harper, M.; Hallmark, T.S.; and Bartolucci, A.A. (2002). A comparison of methods and materials for the analysis of leaded wipes. *J. Environ. Monit.*, **4**(6):1025-1033.

Harper, M.; Hallmark, T.S.; Andrew, M.E.; and Bird, A.J. (2004). A comparison of X-ray fluorescence and wet chemical analysis of air filter samples from a scrap lead smelting operation. *J. Environ. Monit.*, **6**(10):819-826.

Harper, M.; Pacolay, B.; and Andrew, M.E. (2005). A comparison of X-ray fluorescence and wet chemical analysis for lead on air filters from different personal samplers used in a bronze foundry. *J. Environ. Monit.*, **7**(6):592-597.

Harper, M.; and Pacolay, B. (2006). A comparison of X-ray fluorescence and wet chemical analysis for lead on air filters from different personal samplers used in a secondary lead smelter/solder manufacturer. *J. Environ. Monit.*, **8**(1):140-146.

Harper, M.; Pacolay, B.; Hintz, P.; and Andrew, M.E. (2006). A comparison of portable XRF and ICP-OES analysis for lead on air filter samples from a lead ore concentrator mill and a lead-acid battery recycler. *J. Environ. Monit.*, **8**(3):384-392.

Harper, M.; Pacolay, B.; Hintz, P.; Bartly, D.L.; Slaven, J.E.; and Andrew, M.E. (2007). Portable XRF analysis of occupational air filter samples from different workplaces using different sampler: final results, summary and conclusion. *J. Environ. Monit.*, **9**:1263-1270.

Harris, A.R.; Fifarek, B.J.; Davidson, C.I.; and Blackmon, R.L. (2006). Stationary sources of airborne lead: A comparison of emissions data for southern California. *J. Air Waste Manage. Assoc.*, **56**(4):512-517.

Herner, J.D.; Green, P.G.; and Kleeman, M.J. (2006). Measuring the trace elemental composition of size-resolved airborne particles. *Environ. Sci. Technol.*, **40**(6):1925-1933.

Hu, S.; Seshadri, S.; and McFarland, A.R. (2007). CFD study on compound impaction in a jet-in-well impactor. *Aerosol Sci. Technol.*, **41**(12):1102-1109.

Hunter, C.B.; and Rhodes, J.R. (1972). Particle size effects in X-ray emission analysis: Formulae for continuous size distribution. *X-Ray Spectrometry*, **1**:107-111.

Kenny, L.C.; Gussman, R.A.; and Meyer, M.B. (2000). Development of a sharp-cut cyclone for ambient aerosol monitoring applications. *Aerosol Sci. Technol.*, **32**(4):338-358.

Kenny, L.C.; Merrifield, T.; Mark, D.; Gussman, R.; and Thorpe, A. (2004). The development and designation testing of a new USEPA-approved fine particle inlet: A study of the USEPA designation process. *Aerosol Sci. Technol.*, **38**(Suppl.2):15-22.

Keppler, J.F.; Maxfield, M.E.; Moss, W.D.; Tietjen, G.; and Linch, A.L. (1970). Interlaboratory evaluation of the reliability of blood lead analysis. *J. Am. Ind. Hyg. Assoc.*, **31**:412.

Kilbride, C.; Poole, J.; and Hutchings, T.R. (2006). A comparison of Cu, Pb, As, Cd, Zn, Fe, Ni and Mn determined by acid extraction/ICP-OES and ex situ field portable X-ray fluorescence analyses. *Environ. Poll.*, **143**(1):16-23.

Kim, N.S.; Kim, J.H.; Ahn, K.D.; and Lee, B.K. (2007). Use of field-portable x-ray fluorescence (FPXRF) Analyzer to measure airborne lead levels in Korean Workplaces. *Journal of Occupational Health*, **49**:493-498.

Lemieux, P.M.; Ryan, J.V.; French, N.B.; Haas, W.J.; Priebe, S.; and Burns, D.B. (1998). Results of the September 1997 DOE/EPA demonstration of multimetal continuous emission monitoring technologies. *Waste Management*, **18**(6-8):385-391.

Lin, J.M.; Fang, G.C.; Holsen, T.M.; and Noll, K.E. (1993). A comparison of dry deposition modeled from size distribution data and measured with a smooth surface for total particle mass, lead and calcium in Chicago. *Atmos. Environ.*, **27A**(7):1131-1138.

Lubecki, A. (1969). Theoretical discussion of methods of elimination of matrix effects in non-dispersive X-ray analysis. *J. Radioanal. Chem.*, **2**:3-18.

Lundgren, D.A.; Hausknecht, B.J.; and Burton, R.M. (1984). Large particle size distribution in 5 United States cities and the effect on a new ambient particulate matter standard (PM_{10}). *Aerosol Sci. Technol.*, **3**(4):467-473.

Matsumura, R.T.; and Cahill, T.A. (1991). Spatial inhomogeneities in SCAQS filters. Prepared for , Research Division, California Air Resources Board, by Air Quality Group, Crocker Nuclear Lab, University of California, Davis, CA.

McKee, H.C.; Childers, R.E.; and Saenz, O. (1971). Collaborative study of reference method for the determination of suspended particulates in the atmosphere (High Volume Method). Report No. APTD-0904. Prepared by U.S. Environmental Protection Agency, Research Triangle Park, NC.

Menzel, N.; Schramel, P.; and Wittmaack, K. (2002). Elemental composition of aerosol particulate matter collected on membrane filters: A comparison of results by PIXE and ICP-AES. *Nuclear Instruments & Methods in Physics Research Section B-Beam Interactions with Materials and Atoms*, **189**:94-99.

Moreira, F.R.; Borges, R.M.; and Oliveira, R.M. (2005). Comparison of two digestion procedures for the determination of lead in lichens by electrothermal atomic absorption spectrometry. *Spectrochimica Acta Part B-Atomic Spectroscopy*, **60**(5):755-758.

Munksgaard, N.C.; and Parry, D.L. (1998). Lead isotope ratios determined by ICP-MS: Monitoring of mining-derived metal particulates in atmospheric fallout, Northern Territory, Australia. *Sci. Total Environ.*, **217**(1-2):113-125.

NIOSH (1994a). Method 7082: Lead by flame AAS (Issue 2). Report No. 4th. Prepared by National Institute of Occupational Safety and Health, Cincinnati, OH. http://www.cdc.gov/niosh/nmam/pdfs/7082.pdf.

NIOSH (1994b). Method 7105: Lead by GFAAS (Issue 2). Report No. 4th. Prepared by National Institute of Occupational Safety and Health, Cincinnati, OH. http://www.cdc.gov/niosh/nmam/pdfs/7105.pdf.

NIOSH (1998). Method 7702: Lead by field portable XRF (Issue 1). Report No. 4th. Prepared by National Institute of Occupational Safety and Health, Cincinnati, OH. http://www.cdc.gov/niosh/nmam/pdfs/7702.pdf.

NIOSH (2003a). Method 7300: Elements by ICP (Aqua regia ashing) (Issue 1). Report No. 4th. Prepared by National Institute of Occupational Safety and Health, Cincinnati, OH. http://www.cdc.gov/niosh/nmam/pdfs/7301.pdf.

NIOSH (2003b). Method 7300: Elements by ICP (Nitric/perchloric acid ashing) (Issue 3). Report No. 4th. Prepared by National Institute of Occupational Safety and Health, Cincinnati, OH. http://www.cdc.gov/niosh/nmam/pdfs/7300.pdf.

NIOSH (2003c). Method 7303: Elements by ICP (Hot Block/HCl/HNO3 Digestion) (Issue 1). Report No. 4th. Prepared by National Institute of Occupational Safety and Health, Cincinnati, OH. http://www.cdc.gov/niosh/nmam/pdfs/7303.pdf.

NIOSH (2003d). Method 7701: Lead by portable ultrasonic extraction ASV (Issue 2). Report No. 4th. Prepared by National Institute of Occupational Safety and Health, Cincinnati, OH. http://www.cdc.gov/niosh/nmam/pdfs/7701.pdf.

NIST (2008). Standard reference materials: 105.13 Lead in paint, dust, and soil (powder and sheet forms). Prepared by National Institute of Standards and Technology, Gaithersburg, MD. https://srmors.nist.gov/tables/view_table.cfm?table=105-13.htm.

Nottrodt, K.H.; Georgii, H.W.; and Groeneveld, K.O. (1978). Absolute element concentrations in aerosols analyzed by atomic absorption spectrometry and by proton-induced X-ray emission, a comparison. *J. Aerosol Sci.*, **9**:169.

Parkes, J.; Rabbitt, L.J.; and Hampshire, M.J. (1974). Live peak-stripping during X-ray energy dispersive analysis. *Anal. Chem.*, **46**(12):1830-1831.

Peters, T.M.; Gussman, R.A.; Kenny, L.C.; and Vanderpool, R.W. (2001a). Evaluation of $PM_{2.5}$ size selectors used in speciation samplers. *Aerosol Sci. Technol.*, **34**(5):422-429.

Peters, T.M.; Norris, G.A.; Vanderpool, R.W.; Gemmill, D.B.; Wiener, R.W.; Murdoch, R.W.; McElroy, F.F.; and Pitchford, M.L. (2001b). Field performance of $PM_{2.5}$ Federal Reference Method Samplers. *Aerosol Sci. Technol.*, **34**(5):433-443.

Peters, T.M.; Vanderpool, R.W.; and Wiener, R.W. (2001c). Design and calibration of the EPA $PM_{2.5}$ well impactor ninety-six (WINS). *Aerosol Sci. Technol.*, **34**(5):389-397.

Pyle, S.M.; Nocerino, J.M.; Deming, S.N.; Palasota, J.A.; Palasota, J.M.; Miller, E.L.; Hillman, D.C.; Kuharic, C.A.; Cole, W.H.; Fitzpatrick, P.M.; Watson, M.A.; and Nichols, K.D.

(1996). Comparison of AAS, ICP-AES, PSA, and XRF in determining lead and cadmium in soil. *Environ. Sci. Technol.*, **30**(1):204-213.

Reynolds, S.J.; Etre, L.; Thorne, P.S.; Whitten, P.; Selim, M.; and Popendorf, W.J. (1997). Laboratory comparison of vacuum, OSHA, and HUD sampling methods for lead in household dusts. *J. Am. Ind. Hyg. Assoc.*, **58**(6):439-446.

Rhodes, J.R.; and Hunter, C.B. (1972). Particle size effects in X-ray emission analysis: simplified formulae for certain practical cases. *X-Ray Spectrometry*, **1**(3):113-117.

Rich, D.Q.; Yiin, L.M.; Rhoads, G.G.; Glueck, D.H.; Weisel, C.; and Lioy, P.J. (1999). A field comparison of two methods for sampling lead in household dust. *J. Expo. Anal. Environ. Epidemiol.*, **9**(2):106-112.

RTI (2004). Standard operating procedure for the x-ray fluorescence analysis of $PM_{2.5}$ deposits on Teflon filters. Prepared by Environ. & Industrial Meas. Div., Research Triangle Institute, Research Triangle Park, NC. http://www.epa.gov/ttn/amtic/files/ambient/pm25/spec/xrfsop.pdf.

Russ, J.C. (1977). Processing of energy-dispersive X-ray spectra. *X-Ray Spectrometry*, **6**(1):37-55.

Scheffe, R.; Hubbell, B.J.; Fox, T.D.; Rao, V.B.; and Pennell, W.R. (2007). The Rationale for a Multipollutant, Multimeda Air Quality Management Framework. *EM*, **May**:14-20.

Smith, F.; and Nelson, A.C., Jr. (1973). Reference method for the determination of suspended particulates in the atmosphere (High Volume Method). Report No. EPA-R4-73-028b. Prepared by U.S. Environmental Protection Agency, Research Triangle Park, NC.

Statham, P.J. (1976). A comparative study of techniques for quantitative analysis of the x-ray spectra obtained with a Si(Li) detector. *X-Ray Spectrometry*, **5**:16-28.

Statham, P.J. (1977). Deconvolution and background subtraction by least-squares fitting with prefiltering of spectra. *Anal. Chem.*, **49**(14):2149-2154.

Sterling, D.A.; Lewis, R.D.; Luke, D.A.; and Shadel, B.N. (2000). A portable X-ray fluorescence instrument for analyzing dust wipe samples for lead: Evaluation with field samples. *Environmental Research*, **83**(2):174-179.

Sussell, A.; and Ashley, K. (2002). Field measurement of lead in workplace air and paint chip samples by ultrasonic extraction and portable anodic stripping voltammetry. *J. Environ. Monit.*, **4**(1):156-161.

U.S.EPA (1982). Reference Method for the determination of suspended particulate matter in the atmosphere (High-Volume Method) - 40 CFR Part 50. *Federal Register*, **48**:54912.

U.S.EPA (1983). Reference Method for the Determination of Suspended Particulate Matter in the Atmosphere (High-Volume Method) - 40 CFR Part 50 Appendix B. *Federal Register*, **48**:17355.

U.S.EPA (1987). Reference Method for the Determination of Particle Matter as PM_{10} in the Atmosphere. *Federal Register*, **52**:29467.

U.S.EPA (1989). Ambient air monitoring reference and equivalent methods; Reference method designation. *Federal Register*, **54**(56):12273.

U.S.EPA (1999a). Compendium Method IO-3.3: Determination of metals in ambient particulate matter using X-ray fluoescence (XRF) spectroscopy. Report No. EPA/625/R-96/010a. Prepared by U.S. Environmental Protection Agency, Research Triangle Park, NC. http://www.epa.gov/ttn/amtic/files/ambient/inorganic/mthd-3-3.pdf.

U.S.EPA (1999b). Compendium Method IO-3.4: Determination of metals in ambient particulate matter using inductively coupled plasma spectrometry (ICP). Report No. EPA/625/R-96/010a. Prepared by U.S. Environmental Protection Agency, Research Triangle Park, NC. http://www.epa.gov/ttn/amtic/files/ambient/inorganic/mthd-3-4.pdf.

U.S.EPA (1999c). Compendium Method IO-3.2: Determination of metals in ambient particulate matter using atomic absorption (AA) spectroscopy. Report No. EPA/625/R-96/010a. Prepared by U.S. Environmental Protection Agency, Research Triangle Park, NC. http://www.epa.gov/ttn/amtic/files/ambient/inorganic/mthd-3-2.pdf.

U.S.EPA (1999b). Compendium Method IO-3.6: Determination of metals in ambient particulate matter using proton induced X-ray emission (PIXE) spectroscopy. Report No. EPA/625/R-96/010a. Prepared by U.S. Environmental Protection Agency, Research Triangle Park, NC. http://www.epa.gov/ttn/amtic/files/ambient/inorganic/mthd-3-6.pdf.

U.S.EPA (2005). National ambient air monitoring strategy. Prepared by U.S. Environmental Protection Agency, Research Triangle Park, NC. http://www.epa.gov/ttn/amtic/files/ambient/monitorstrat/naamstrat2005.pdf.

U.S.EPA (2006). National ambient air quality standards for particulate matter: Proposed rule. *Federal Register*, **71**(10):2620-2708.

van der Meulen, A.; Hofschreuder, P.; van de Vate, J.F.; and Oeseburg, F. (1984). Feasibility of high volume sampling for determination of total suspended particulate matter and trace metals. *J. Air Poll. Control Assoc.*, **34**(2):144-151.

VanCott, R.J.; McDonald, B.J.; and Seelos, A.G. (1999). Standard soil sample preparation error and comparison of portable XRF to laboratory AA analytical results. *Nuclear Instruments & Methods in Physics Research Section A-Accelerators Spectrometers Detectors and Associated Equipment*, **422**(1-3):801-804.

Walder, A.J.; and Furuta, N. (1993). High-precision Pb isotope ratio measurement by inductively coupled plasma multiple collector mass spectrometry. *Anal. Sci.*, **9**:675-681.

Watson, J.G. (1979). Chemical element balance receptor model methodology for assessing the sources of fine and total suspended particulate matter in Portland, Oregon. Ph.D. Dissertation, Oregon Graduate Center, Beaverton, OR.

Watson, J.G.; Bowen, J.L.; Chow, J.C.; Rogers, C.F.; Ruby, M.G.; Rood, M.J.; and Egami, R.T. (1989). High volume measurement of size classified suspended particulate matter. In *Methods of Air Sampling and Analysis,* 3rd ed., J.P. Lodge, Ed. Lewis Publishers, Inc., Chelsea, MI, pp. 427-439.

Watson, J.G.; and Chow, J.C. (1993). Ambient air sampling. In *Aerosol Measurement: Principles, Techniques and Applications*, K. Willeke and P.A. Baron, Eds. Van Nostrand, Reinhold, New York, NY, pp. 622-639.

Watson, J.G.; Chow, J.C.; Rogers, C.F.; Green, M.C.; Kohl, S.D.; Frazier, C.A.; Robinson, N.F.; and DuBois, D.W. (1997). Annual report for the Robbins Particulate Study - October 1995 through September 1996. Report No. 7100.3F2. Prepared for VERSAR Inc., Lombard, IL, by Desert Research Institute, Reno, NV.

Watson, J.G.; Chow, J.C.; and Frazier, C.A. (1999a). X-ray fluorescence analysis of ambient air samples. In *Elemental Analysis of Airborne Particles, Vol. 1*, S. Landsberger and M. Creatchman, Eds. Gordon and Breach Science, Amsterdam, pp. 67-96.

Watson, J.G.; Chow, J.C.; Kohl, S.D.; Kuhns, H.D.; Robinson, N.F.; Frazier, C.A.; and Etyemezian, V. (1999b). Annual report for the Robbins Particulate Study: October 1996 through September 1997. Report No. 7100.4F3. Prepared for VERSAR, Inc., Lombard, IL, by Desert Research Institute, Reno, NV.

Watson, J.G.; Chow, J.C.; Kohl, S.D.; Kuhns, H.D.; Robinson, N.F.; Frazier, C.A.; and Etyemezian, V. (2000). Annual report for the Robbins Particulate Study - October 1997 through September 1998. Prepared for Versar Inc., Lombard, IL, by Desert Research Institute, Reno, NV.

Watson, J.G.; and Chow, J.C. (2001). Ambient air sampling. In *Aerosol Measurement: Principles, Techniques, and Applications, Second Edition,* 2nd ed., P. Baron and K. Willeke, Eds. John Wiley & Sons, New York, NY, pp. 821-844.

Wedding, J.B.; McFarland, A.R.; and Cermak, J.E. (1977). Large particle collection characteristics of ambient aerosol samplers. *Enivron. Sci. Technol.*, **11**(4):387-390.

Witz, S.; Smith, T.B.; Shu, M.; and Moore, A.B. (1982). A comparison of mass, lead, sulfate and nitrate concentrations in a field study using dichotomous, size-selective and standard Hi-Vol samplers. *J. Air Poll. Control Assoc.*, **32**(3):276-278.