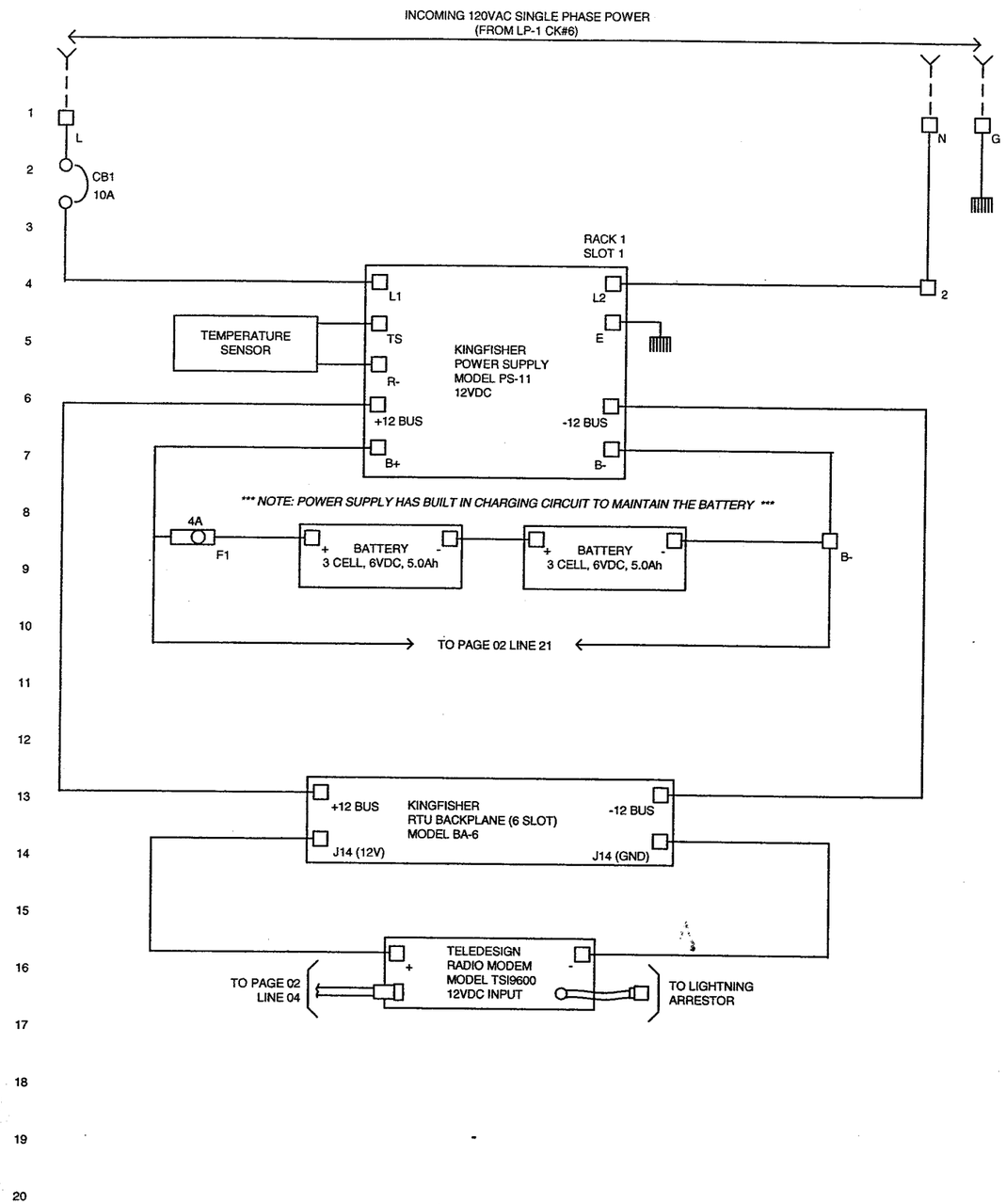

REVIEWED BY

ENCANTO PARK CONTROL PANEL			
Customer	EPA for the City of San Bernardino		
Project	Encanto Park Pumping Plant	JOB NUMBER	CSB24489

ATSI
Advanced Telemetry Systems International, Inc.
P.O.461659 Escondido, CA 92046-1659 760.738.6804

SCALE	DATE	REVISION	DESIGNED BY	DRAWN BY
N.S.	04-26-04	0	STAFF	M. SMITH

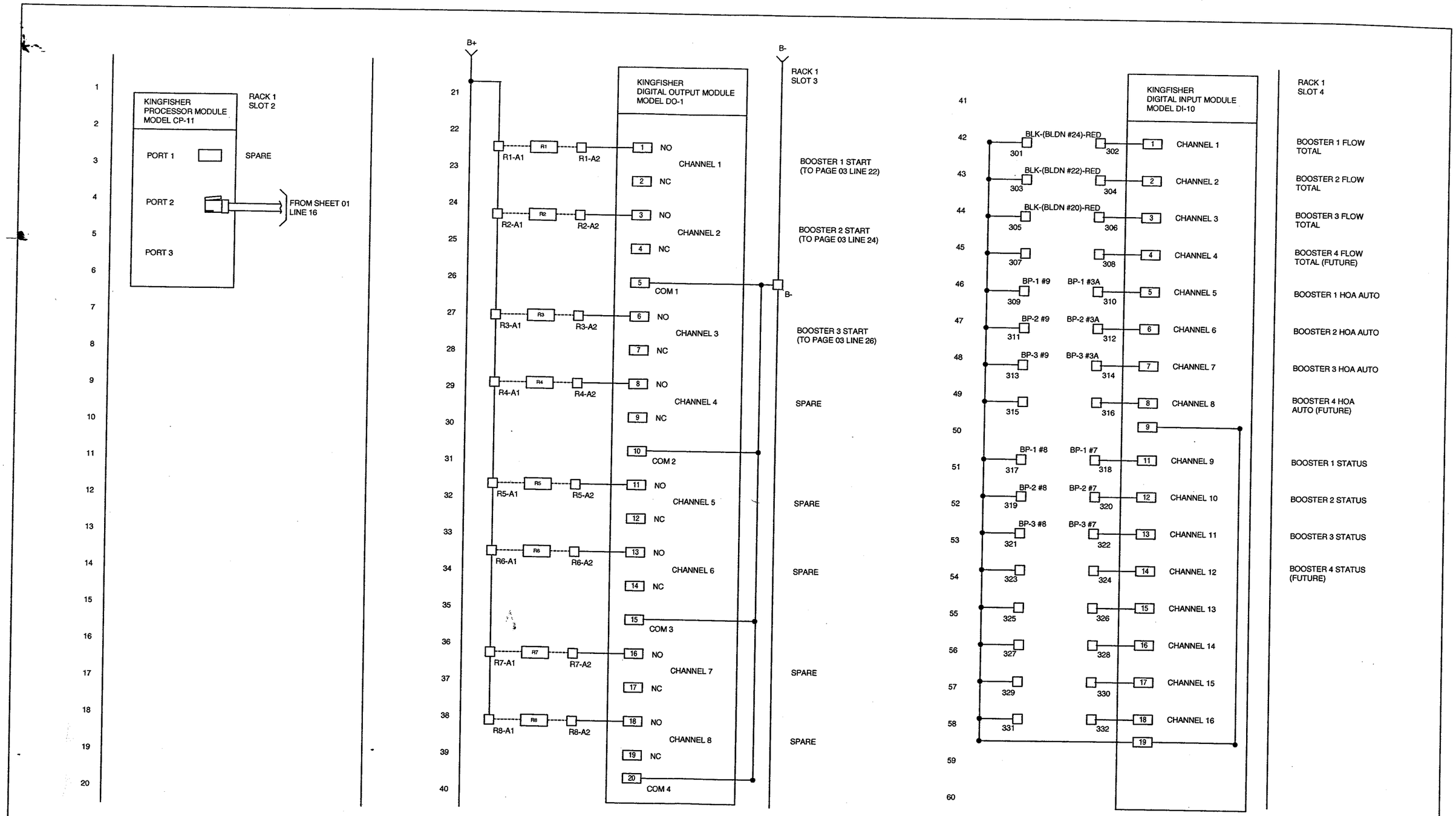

REVIEWED BY

ENCANTO PARK CONTROL PANEL			
Customer	EPA for the City of San Bernardino		
Project	Encanto Park Pumping Plant	JOB NUMBER	CSB24489

ATSI
Advanced Telemetry Systems International, Inc.
P.O.461659 Escondido, CA 92046-1659 760.738.6804

SCALE	DATE	REVISION	DESIGNED BY	DRAWN BY
N.S.	04-26-04	0	STAFF	M. SMITH

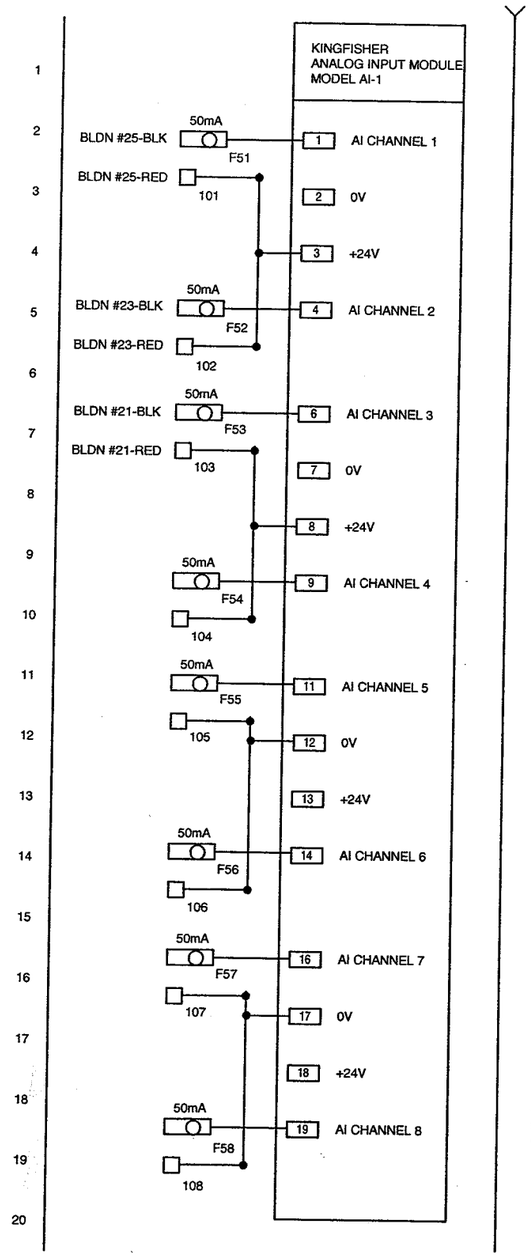

RACK 1
SLOT 5

BOSTER 1 FLOW RATE

BOOSTER 2 FLOWRATE

BOOSTER 3 FLOW RATE

WATER PRESSURE

CHLORINE RESIDUAL

WATER TEMPERATURE

WATER pH

BOOSTER 4 FLOW RATE
(FUTURE)

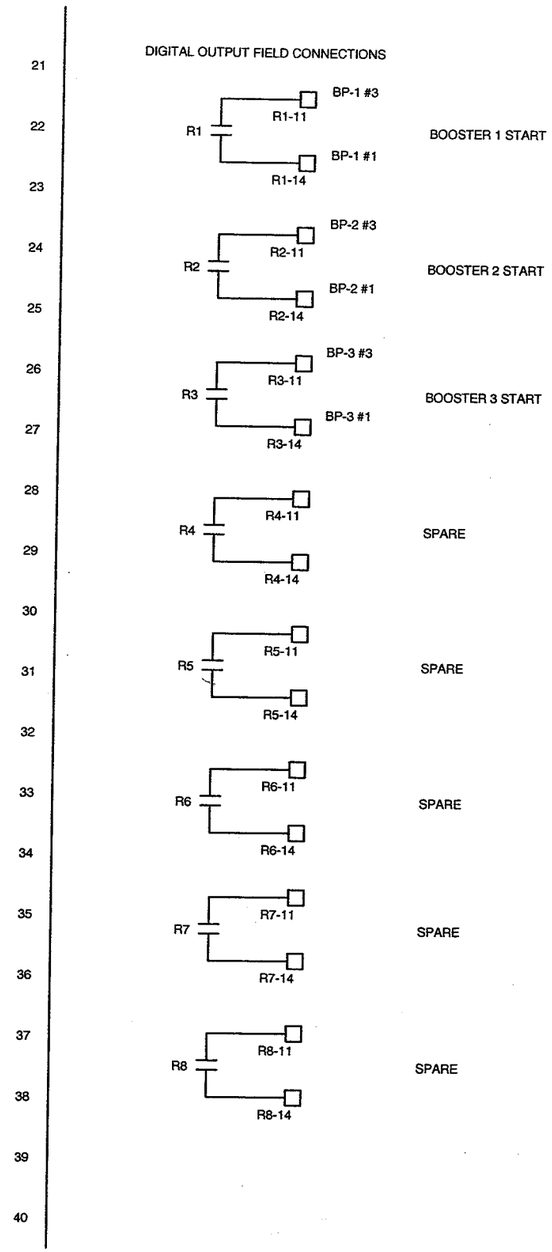

REVIEWED BY

ENCANTO PARK CONTROL PANEL			
Customer	EPA for the City of San Bernardino		
Project	Encanto Park Pumping Plant	JOB NUMBER	CSB24489

ATSI
Advanced Telemetry Systems International, Inc.
P.O.461659 Escondido, CA 92046-1659 760.738.6804

SCALE	DATE	REVISION	DESIGNED BY	DRAWN BY
N.S.	04-26-04	0	STAFF	M. SMITH

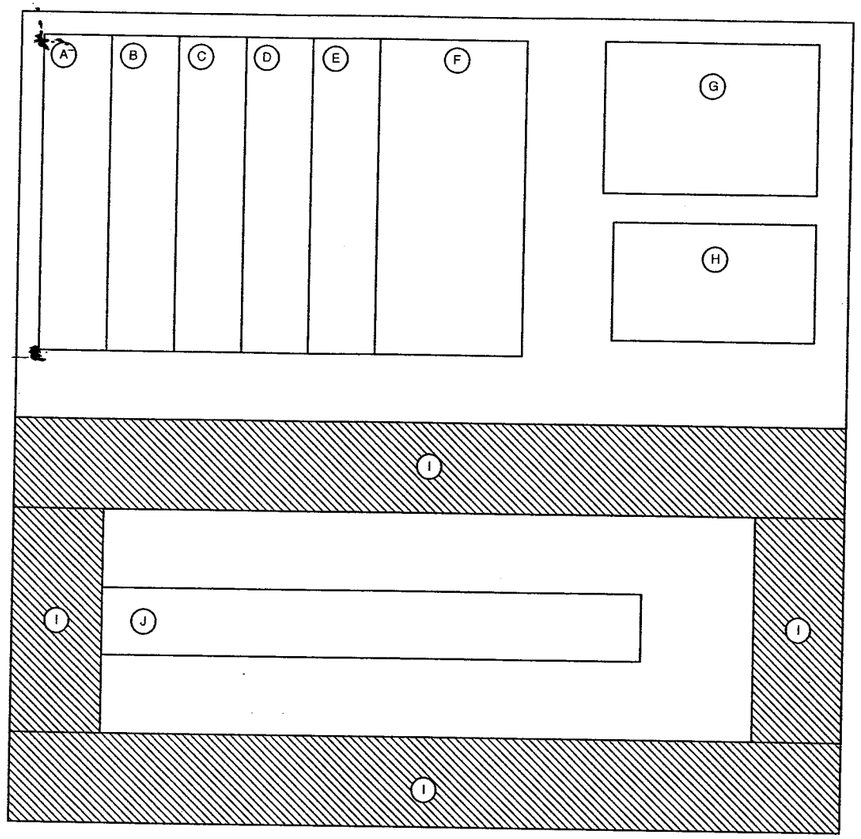

EQUIPMENT SUPPLIED BY OTHERS

LEGEND	
A	PS-11
B	CP-11
C	DO-1
D	DI-10
E	AI-1
F	BA-6
G	BATTERIES
H	TS-4000 RADIO
I	PANDUIT
J	DIN RAIL

ENCANTO PARK CONTROL PANEL			
Customer	EPA for the City of San Bernardino		
Project	ENCANTO PARK PUMPING PLANT	JOB NUMBER	CSB24489

ATSI
Advanced Telemetry Systems International, Inc.
P.O.461659 Escondido, CA 92046-1659 760.738.6804

SCALE	DATE	REVISION	DESIGNED BY	DRAWN BY
N.S.	04-26-04	0	STAFF	M. SMITH

REVIEWED BY