ENGINEERING EVALUATION/COST ANALYSIS (EE/CA)

AMCO Chemical Superfund Site
Oakland, California

Contract Order Number: EP-S9-13-01
OTIE Project Number: 2014230
DCN: OTIE-2014230-0002

Prepared for

Region 9
US Environmental Protection Agency
75 Hawthorn Street
San Francisco, CA 94105

Prepared by

1777 N. California Blvd., Suite 310
Walnut Creek, CA 94596

10 February 2015

UNITED STATES ENVIRONMENTAL PROTECTION AGENCY, REGION 9

Report Title:	Engineering Evaluation / Cost Analysis (EE/CA) AMCO Chemical Superfund Site, Oakland, California
Site Name:	AMCO Chemical Superfund Site
Location:	1414 3rd Street, Oakland, California
EPA Contract No.:	EP-S9-13-01
Task Order No.:	#007-NSEE-09DJ
OTIE Report DCN:	OTIE-2014230-0002
Firm:	Oneida Total Integrated Enterprises (OTIE)
Firm's Address:	1777 N. California Blvd., Suite 310 Walnut Creek, CA 94596
Telephone:	925-906-9698
EPA Project Manager:	Lynn Suer
EPA's Address:	75 Hawthorne Street San Francisco, California 94105
EPA's Telephone:	415-972-3148

This report was prepared in accordance with currently accepted professional practices and under the direct supervision of the Professional Engineer registered with the State of California, whose signature appears below.

Alexander Bowerman, P.E.
California Registration No.: 81188
Expiration: 30 September 2015

2-9-2015
Date

REGISTERED PROFESSIONAL ENGINEER
ALEXANDER SCOTT BOWERMAN
81188
CIVIL
STATE OF CALIFORNIA

Reviewed By:

Nova Clite, P.G.
California Registration No.: 8482
Expiration: 30 November 2015

2-9-2015
Date

PROFESSIONAL GEOLOGIST
NOVA CLITE
No. 8482
EXP. 11/2015
STATE OF CALIFORNIA

EXECUTIVE SUMMARY

This Engineering Evaluation / Cost Analysis (EE/CA) was prepared for the United States Environmental Protection Agency (EPA) Region 9, San Francisco, by Oneida Total Integrated Enterprises, LLC (OTIE) under EPA contract #ES-S9-13-01, Task Order 0007. The report evaluates removal alternatives for the reduction of volatile organic compounds (VOCs) at the AMCO Superfund Site (Site) located at 1414 3rd Street, Oakland, California (APN 004-0073-010-0). The EPA will be conducting a Non-Time Critical Removal Action (NTCRA) to reduce the highest levels of VOCs at the Site. The EPA is required by the Comprehensive Environmental Response, Compensation, and Liability Act (CERCLA) 300.415(b)(4)(i) of the National Oil and Hazardous Substances Pollution Contingency Plan (NCP) to prepare an EE/CA to select an appropriate removal alternative for the NTCRA. An EE/CA defines the removal action objectives (RAOs) for a site and then compares each proposed alternative based on effectiveness, implementability, and cost.

The NTCRA for the Site will be an interim remedy to address the portions of the Site with the highest concentrations of VOCs that pose a threat to human health or the environment. The EPA will pursue a process for determining final cleanup of the Site after the NTCRA is completed. The final action will address VOC and non-VOC contamination pathways remaining on Site after completion of the NTCRA.

The vapor intrusion (VI) exposure pathway is the overriding issue addressed by this NTCRA. The Site is currently paved with a non-engineered concrete layer ranging in thickness from 1 to 6 feet, except where there are existing buildings. The concrete layer mitigates potential risks associated with other risk pathways, including dermal contact or ingestion of contaminated soils and/or inhalation of dust particles.

The primary goal of the NTCRA is to reduce potential risks associated with VI into structures and residences at and near the Site, by reducing the mass of chlorinated VOCs in the source area. With limited sampling results, the calculation of risk and hazard from VI using these data is likely underestimated due to uncertainty. Existing data have confirmed a complete VI pathway for the warehouse/office space on the property. Indoor air sample results show indoor air concentrations exceeding concentrations considered safe for unrestricted use. The NTCRA is expected to significantly reduce the potential for VI in existing and future structures on the Site within the statutory limit of 12 months.

Existing data have not confirmed a completed VI pathway in residences adjacent to the site. However, due to detections of site-related VOCs in the crawl spaces of some homes, EPA installed vapor mitigation systems under four homes in 2010 to address the potential for a complete VI pathway. By eliminating the contaminant source, which feeds the groundwater plume, the risks associated with vapor flux from groundwater will diminish over time.

The AMCO Chemical Corporation owned and operated the Site as a chemical distribution facility from the 1960s until 1989. The business accepted a wide range of chemicals in bulk and repackaged and distributed chemicals in smaller containers for resale. Bulk chemicals were delivered via a rail spur located at the central area of the Site near the 3rd Street entrance, and the facility stored the chemicals in drums and tanks located throughout the Site. The chemicals handled at the Site included: chlorinated and non-chlorinated organic solvents, petroleum hydrocarbons, organochlorine pesticides, organophosphate pesticides, ethylene glycol and other glycol products, creosote, and inorganic salts.

Contamination was discovered at the Site in 1986 by the owner during a limited soil sampling event; however, regulatory involvement was not initiated until 1988 when the Department of Health Services (now the Department of Toxic Substances Control) conducted a site investigation in response to a spill

report. Subsequent sampling over the next few years confirmed high levels of chlorinated hydrocarbons and other VOCs in the central area of the Site, as well as semi-volatile organic compounds (SVOCs), pesticides, and metals. The EPA accepted regulatory oversight in 1996 and pursued an emergency response action to reduce the high levels of vinyl chloride in the central area of the Site. A Soil Vapor Extraction (SVE) system was built and operated for one year, but was shut down after one year of operation in response to community concerns regarding air emissions from the treatment system. Since 1996, the EPA has conducted routine groundwater sampling, soil gas sampling, and extensive soil sampling at the Site and at nearby properties. Sample results show consistently high levels of VOCs in the groundwater and soil in the central area of the Site near 3rd Street. In addition to soil and groundwater contamination, light non-aqueous phase liquid (LNAPL) was initially found on the Site in 1995 by PG&E during utility construction work on 3rd Street. In subsequent sampling events conducted by the EPA, LNAPL has been consistently observed in the three monitoring wells located in the central area of the Site (MW-13, MW-14, and RMW-02-13). The measured thickness of LNAPL in monitoring wells ranged from under 1 foot in MW-13 to over 8 feet in MW-14. Samples of the LNAPL indicated it is comprised of numerous different petroleum and chlorinated VOCs and SVOCs, including approximately 7.6% TCE and 2.5% cis-1,2 DCE.

The Site is underlain by two unconsolidated aquifers separated by a regional aquitard. The upper aquifer consists of imported fill and native sand and silty sand deposits with thin layers of silt and clay (Merritt Sand), is approximately 55 to 70 feet thick, and is a potential drinking water source in the upgradient portions of the Site (although it is not currently used as a potable supply). Contamination at the Site has been found primarily within this layer to approximately 45 feet below ground surface (bgs). Groundwater at the Site is approximately 5 feet bgs and flows to the southwest. The Merritt Sand is underlain by a confining layer (Older Bay Mud) composed of very dense silt with zones of dense clay. The Older Bay Mud is generally 50 to 90 feet thick in the vicinity of the Site. The lower aquifer (Alameda Formation) consists of interbedded clay, silt, sand and gravel, is approximately 250 feet thick in the vicinity of the Site, and is underlain with bedrock. The Alameda Formation is a potential drinking water source. Sampling results confirm that contaminants from the Site have not penetrated the confining layer into this drinking water aquifer.

One warehouse/office building, two small sheds and portions of the former SVE system remain on-site. The warehouse/office is located at the eastern boundary of the Site and the underlying soil is believed to be contaminated with VOCs based on the extrapolation of past and recent sampling results. Groundwater sampling was not conducted under the warehouse, although contamination is likely to be present based on the trends of nearby soil sampling results and groundwater flow. The warehouse is currently used as a commercial space and is subject to vapor intrusion from VOCs under the building. Due to this potential risk, the EE/CA included the area below the warehouse that could be impacted within the proposed treatment area boundary.

The RAOs selected for the NTCRA were based on the San Francisco Bay Regional Water Quality Control Board (SFRWQCB) Environmental Screening Levels (ESLs). The groundwater screening levels for vapor intrusion were selected as the groundwater RAO, and the soil ESLs were chosen as the soil RAO. Both RAOs were based on SFRWQCB screening levels for areas where groundwater is a potential drinking water source. Comparing the RAOs to the highest contaminant concentrations detected in Site soil and groundwater revealed that trichloroethene (TCE), vinyl chloride, and cis-1,2-dichloroethene (cis-1,2-DCE) are the primary drivers for the NTCRA (their concentrations were highest relative to their respective RAOs). During investigations conducted between 2006 and 2013, TCE was detected at 5,600,000 micrograms per kilogram (µg/kg) in soil and 5,000 micrograms per liter (µg/L) in groundwater. Vinyl

chloride was detected at 16,000 µg/kg in soil and 15,000 µg/L in groundwater. Cis-1,2-DCE was detected at 1,400,000 µg/kg in soil and 66,000 µg/L in groundwater. The RAOs will apply to a treatment area that includes the portion of the Site with the highest VOC concentrations.

The EE/CA evaluated six removal alternatives for the reduction of VOCs at the Site: No Action, Excavation and Off-Site Disposal, Multi-Phase Extraction (MPE), In-Situ Thermal Heating (ISH), Enhanced In-Situ Bioremediation (EISB) with Free Product Recovery, and Free Product Recovery followed by Air Sparging and Soil Vapor Extraction (AS/SVE). Relative ranking of the EE/CA removal action alternatives is presented below:

Ranking	Technology	Effectiveness	Implementability	Removal Action Timeframe	Cost*
1	Alternative 4 - ISH	Good to Excellent	Moderate to Good	6 - 9 Months	$8,522,140
2	Alternative 3 – MPE	Moderate	Moderate	5 Years	$11,249,080
3	Alternative 2 – Excavation and Offsite Disposal	Moderate	Poor to Moderate	3 - 6 Months	$28,957,017
4	Alternative 6 – AS/SVE	Moderate	Moderate	7 Years	$12,420,716
5	Alternative 5 – EISB	Poor to Moderate	Moderate to Good	11 Years	$7,833,951
6	Alternative 1 – No Action	Poor	N/A	N/A	$0

Notes:

1) Ranking based on qualitative assessment of all EE/CA guidance criteria. Refer to Tables 7-1 and 7-2 for details.

2) * = cost is a total of direct capital, indirect capital, performance monitoring and decommissioning costs.

3) Removal action timeframes include construction and operation of constructed systems, but do not include long-term monitoring

Alternative 4 – In-Situ Thermal Heating is the recommended removal action alternative for the Site. ISH heats the soil and groundwater to volatilize contaminants, which are then collected by vapor extraction wells and transferred to an above ground treatment system. The implementation of ISH will significantly reduce LNAPL, vapor phase, dissolved phase and adsorbed phase VOCs throughout the entire treatment area including the vadose zone and saturated zone. Site geology is amenable to ISH, and ISH can be implemented with minimal long-term impacts to the existing structures and subsurface utility infrastructure.

Implementing ISH would result in immediate reductions in vapor risk within existing structures on the property. The ISH alternative has the highest probability of achieving the RAOs within the 12-month statutory limit.

Reliable vendors are available to quickly mobilize and implement Alternative 4. ISH infrastructure and equipment could be installed within 3-4 months once design is finalized and approved, and it is estimated that ISH would operate for approximately 6 months to achieve RAOs.

An additional benefit of ISH is that subsurface temperatures remain elevated for several months, and sometimes years, after the system is shutdown. During this slow cool down phase, the subsurface will be at an optimum temperature (30 – 45°C) for new microbial growth, greatly accelerating natural biodegradation of residual VOCs. Injection of an organic substrate, after ISH shutdown, would further accelerate the natural process of reductive dechlorination and greatly increase the long-term effectiveness and permanence of the action.

TABLE OF CONTENTS

Executive Summary 1

Acronyms and Abbreviations v

1.0 Introduction 1-1
- 1.1. EE/CA Background 1-1
- 1.2. Project Objectives 1-1

2.0 Site Description and Background 2-1
- 2.1. Site Description, Operation and History 2-1
  - 2.1.1. Materials Manufactured, Stored and/or Disposed On-Site 2-1
  - 2.1.2. Site Operational History 2-1
  - 2.1.3. Regulatory History (Federal, State, Local) and Past Response Actions 2-4
  - 2.1.4. Structures and Topography 2-11
  - 2.1.5. Geology and Hydrogeology 2-12
  - 2.1.6. Sensitive Ecosystems 2-15
- 2.2. Previous Removal Actions 2-16
  - 2.2.1. Soil Vapor Extraction System 2-16
  - 2.2.2. Cleanup of Lead Contaminated Soils in Residential Yards near the Site 2-16
  - 2.2.3. Installation of Vapor Intrusion Mitigation Systems 2-16
- 2.3. Source, Nature and Extent of Contamination 2-16
  - 2.3.1. Location of Contaminants by Type 2-17
  - 2.3.2. Contaminant Levels 2-19
  - 2.3.3. Physical and Chemical Attributes of Contaminants 2-19
- 2.4. Analytical Data 2-19

3.0 Streamlined Risk Evaluation 3-1
- 3.1. Selection and Screening of Chemicals for Potential Concern 3-1
- 3.2. Conceptual Site Exposure Model 3-1
- 3.3. Risk Evaluation 3-2
  - 3.3.1. Vapor Intrusion 3-3
  - 3.3.2. Risks Due to Exposure to Soils 3-3
  - 3.3.3. Streamlined Risk Evaluation Conclusions 3-4

4.0 Applicable or Relevant and Appropriate Requirements (ARAR) Compliance 4-1

5.0 Identification of Removal Action Scope, Goals, and Objectives 5-1
- 5.1. Statutory Limits on Removal Actions 5-1
- 5.2. Determination of Removal Scope 5-1
  - 5.2.1. Removal Action Objectives 5-2
- 5.3. Determination of Removal Schedule 5-2
- 5.4. Planned Removal Action Activities 5-2

6.0 Identification And Analysis Of Removal Action Alternatives 6-1
- 6.1. Alternative 1: No Action 6-1
  - 6.1.1. Description of Process/Technology 6-1
  - 6.1.2. Effectiveness 6-1
  - 6.1.3. Implementability 6-1
  - 6.1.4. Cost 6-1

6.2. Alternative 2: Excavation and Offsite Disposal 6-1
6.2.1. Description of Process/Technology 6-1
6.2.2. Effectiveness of Cleanup 6-2
6.2.3. Implementability of Removal Technology 6-3
6.2.4. Cost 6-4
6.3. Alternative 3: Multi-Phase Extraction 6-4
6.3.1. Description of Process/Technology 6-4
6.3.2. Effectiveness of Cleanup 6-5
6.3.3. Implementability of Removal Technology 6-6
6.3.4. Cost 6-6
6.4. Alternative 4: In-Situ Thermal Heating 6-7
6.4.1. Description of Process/Technology 6-7
6.4.2. Effectiveness of Cleanup 6-8
6.4.3. Implementability of Removal Technology 6-10
6.4.4. Cost 6-10
6.5. Alternative 5: Enhanced In-Situ Bioremediation with Free Product Recovery 6-10
6.5.1. Description of Process/Technology 6-10
6.5.2. Effectiveness of Cleanup 6-11
6.5.3. Implementability of Removal Technology 6-13
6.5.4. Cost 6-13
6.6. Alternative 6: Free Product Recovery Followed by Air Sparging and Soil Vapor Extraction 6-13
6.6.1. Description of Process/Technology 6-13
6.6.2. Effectiveness of Cleanup 6-14
6.6.3. Implementability of Removal Technology 6-15
6.6.4. Cost 6-16
7.0 Comparative Analysis of Removal Action Alternatives 7-1
7.1. Effectiveness 7-1
7.1.1. Overall Protectiveness of Public Health and the Environment 7-1
7.1.2. Ability to Achieve Removal Action Objectives 7-1
7.1.3. Long-Term Effectiveness and Permanence 7-2
7.1.4. Reduction of Toxicity, Mobility, or Volume through Treatment 7-2
7.1.5. Short Term Effectiveness 7-3
7.2. Implementability 7-3
7.2.1. Technical Feasibility 7-4
7.2.2. Availability of Services and Materials 7-4
7.2.3. Administrative Feasibility 7-5
7.2.4. Cost 7-5
8.0 Recommended Removal Action Alternative 8-1
9.0 References 9-1

FIGURES

Figure 2-1 Site Location Map
Figure 2-2 Soil Characterization Sampling Grid and Concrete Thickness
Figure 2-3 Combined Plume Map- Shallow Groundwater – August 2012
Figure 2-4 Soil Sampling Results and Combined Plume Map - January 2014
Figure 3-1 Exposure Based Conceptual Site Model
Figure 5-1 Proposed Treatment Area
Figure 5-2 Conceptual Site Model with Treatment Depths
Figure 6-1 Conceptual Excavation
Figure 6-2 Excavation Process Flow Diagram
Figure 6-3 Multi-Phase Extraction System Plan
Figure 6-4 Multi-Phase Process Flow Diagram
Figure 6-5 In-Situ Thermal Heating Plan
Figure 6-6 In-Situ Thermal Heating Process Flow Diagram
Figure 6-7 Enhanced In-Situ Bioremediation Plan
Figure 6-8 LNAPL Recovery System Plan
Figure 6-9 Enhanced In-Situ Bioremediation Process Flow Diagram
Figure 6-10 Air Sparging/ Soil Vapor Extraction Plan
Figure 6-11 Air Sparging/ Soil Vapor Extraction Process Flow Diagram

TABLES (In Text)

Table 2-2. Contaminants Identified During the Site Investigation 2-17
Table 2-3. LNAPL Found in the Monitoring Wells near the Site 2-17
Table 2-4. Primary Contaminants Found at the Site.....2-17
Table 2-5. Primary Contaminants Found at the Site.....2-18
Table 4-1. Summary of ARARs.....4-3
Table 8-1. Ranking Summary 8-1

TABLES (After Text)

Table 2-1 List of Chemicals used by AMCO Chemical Corporation
Table 2-6 Light Non-Aqueous Phase Liquid (LNAPL) Composition
Table 2-7 Maximum VOC Soil Concentrations in Treatment Area
Table 2-8 Maximum VOC Concentrations in Groundwater
Table 2-9 Physical and Chemical Attributes of VOCs
Table 3-1 Summary of Cancer Risks and Noncancer Hazards - Soil
Table 3-2 Cancer Risk Results Detailed Summary for Risk Drivers - Future Adult/Child Resident - Groundwater

Table 3-3 Noncancer Risk Results Detailed Summary for Risk Drivers - Future Adult/Child Resident – Groundwater
Table 3-4 Indoor Air Sampling from Warehouse/Office, Outdoor Air and Environmental Screening Levels
Table 5-1 Removal Action Objectives
Table 6-1 Excavation and Offsite Disposal Cost Summary
Table 6-2 Multi-Phase Extraction (MPE) Cost Summary
Table 6-3 In-Situ Thermal Heating (ISH) Cost Summary
Table 6-4 Product Recovery with Enhanced In-Situ Bioremediation Cost Summary
Table 6-5 Air Sparging with Soil Vapor Extraction (AS/SVE) Cost Summary
Table 7-1 Evaluation of Removal Action Alternatives – *Conceptual Design, Assumptions, and Effectiveness*
Table 7-2 Evaluation of Removal Action Alternatives – *Implementability and Costs*

LIST OF APPENDICES

Appendix A – Detailed Costing Spreadsheet, Alternative 2 – Excavation and Offsite Disposal

Appendix B – Detailed Costing Spreadsheet, Alternative 3 – Multi-Phase Extraction

Appendix C – Detailed Costing Spreadsheet, Alternative 4 – In-Situ Thermal Heating

Appendix D – Detailed Costing Spreadsheet, Alternative 5 – Enhanced In-Situ Bioremediation with Free Product Recovery

Appendix E - Detailed Costing Spreadsheet, Alternative 6 – Free Product Removal Followed by Air Sparging Soil and Soil Vapor Extraction

ACRONYMS AND ABBREVIATIONS

Chemical Abbreviations	
ALDRN	Aldrin
An	antimony
As	arsenic
BEN	benzene
B(a)ANTRCN	benzo(a)anthracene
B(a)PYR	benzo(a)pyrene
B(b)FLURNTN	benzo(b)fluoranthene
B(k)FLURNTN	benzo(k)fluoranthene
BrM	bromomethane
CBen	chlorobenzene
CCl4	carbon tetrachloride (tetrachloromethane)
Cd	cadmium
CHRYSN	chrysene
Cl	chloride
Co	cobalt
CO_2	carbon dioxide
Cr	chromium
Cu	copper
DB(a,h)ANTRCN	dibenzo(a,h)anthracene
1,1-DCA	1,1-dichloroethane
1,2-DCA	1,2-dichloroethane
1,2-DCB	1,2-dichlorobenzene
1,3-DCB	1,3-dichlorobenzene
1,4-DCB	1,4-dichlorobenzene
1,1-DCE	1,1-dichloroethene
Cis-1,2-DCE	cis-1,2-dichloroethene
Trans-1,2-DCE	trans-1,2-dichloroethene
1,2-DCP	1,2-dichloropropane
DDD or p,p'-DDD	dichlorodiphenyldichloroethane
DDE or p,p'-DDE	dichlorodiphenyldichloroethene
DDT or p,p'-DDT	dichlorodiphenyltrichloroethane
DLDRN	Dieldrin
1,4-Dxn	1,4-dioxane
EBZ	ethylbenzene
EDB	1,2-dibromoethane (ethylene dibromide)
Fe2+	ferrous iron
HCL	hydrochloric acid
Hg	mercury
H2SO4	sulfuric acid
I(1,2,3-c,d)PYR	Indeno(1,2,3-c,d)pyrene
MBK	2-hexanone (methyl butyl ketone)

MEK	2-butanone (methyl ethyl ketone)
MIBK	4-methyl-2-pentanone (methyl isobutyl ketone)
MTBE	methyl tert-butyl ether
1-MNAPH	1-methylnaphthalene
2-MNAPH	2-methylnaphthalene
NAPH	naphthalene
NO_3	nitrate
NS-n-PPLAM	n-Nitrosodi-n-propylamine
PAH	polycyclic aromatic hydrocarbon
Pb	lead
PCB	polychlorinated biphenyl
PCB-1242	Arochlor 1242
PCB-1254	Arochlor 1254
PCB-1260	Arochlor 1260
PCDD	polychlorinated dibenzo-*p*-dioxin
PCDF	polychlorinated dibenzofurans
PCE	tetrachloroethene (perchloroethylene)
PCP	pentachlorophenol
PHEN	phenanthrene
SO_4	sulfate
TAME	tert-amyl methyl ether
TBA	tert-butyl alcohol
1,1,1-TCA	1,1,1-trichloroethane
1,1,2-TCA	1,1,2-trichloroethane
1,1,2,2-TCA	1,1,2,2-tetrachloroethane
1,2,3-TCB	1,2,3-trichlorobenzene
1,2,4-TCB	1,2,4-trichlorobenzene
TCDD	2,3,7,8-tetrachlorodibenzo-p-dioxin
TCE	trichloroethene
TCM	trichloromethane (chloroform)
Tl	thallium
124-TMB	1,2,4-trimethylbenzene
135-TMB	1,3,5-trimethylbenzene
TOL	toluene
TPH	total petroleum hydrocarbons
TPH-d	total petroleum hydrocarbons (diesel range)
TPH-e	total extractable petroleum hydrocarbons (diesel and motor oil range)
TPH-g	total petroleum hydrocarbons (gasoline range)
TPH-mo	total petroleum hydrocarbons (motor oil range)
VC	vinyl chloride
Xylenes or XYL	xylenes

Abbreviations and Acronyms (continued)	
°C	degrees Celsius
°F	degrees Fahrenheit
%	percent
AA	Assistant Administrator
Accutest	Accutest Northern California Laboratory
AMCO	AMCO Chemical Corporation
Amtrak	National Railroad Passenger Corporation
APP	Accident Prevention Plan
AST	aboveground storage tank
ASTM	ASTM International (formerly American Society for Testing and Materials)
BART	Bay Area Rapid Transit
bgs	below ground surface
bvcA	gene encoding the VC to ethene reductive dehalogenase BvcA
BZ	Breathing zone
Caltrans	California Department of Transportation
CCR	California Code of Regulation
CERCLA	Comprehensive Environmental Response, Compensation, and Liability Act
CFR	Code of Federal Regulations
CIH	Certified Industrial Hygienist
CLP	(US EPA) Contract Laboratory Program
CMOS	completely miscible organic solvent
CMS	chip measurement system
cm/s	centimeters per second
COC	chemical of concern; chain of custody
COD	chemical oxygen demand
COPC	Contaminant of Potential Concern
CPT	cone penetrometer testing
CPVC	chlorinated polyvinyl chloride
CSM	Conceptual Site Model
CVOC	chlorinated volatile organic compound
DC Metals	DC Metals, Inc.
DHC	*Dehalococcoides* bacteria
DHS	[California] Department of Health Services
DNAPL	dense non-aqueous phase liquids
DO	dissolved oxygen
DOC	dissolved organic carbon
DPT	direct push technology
DTSC	[California] Department of Toxic Substances Control
EBMUD	East Bay Municipal Utility District
EC	electrical conductivity

Abbreviations and Acronyms (continued)	
ECD	electrolytic conductivity detector
EE/CA	Engineering Evaluation / Cost Analysis
EISB	Enhanced In-Situ Bioremediation
ELAP	Environmental Laboratory Accreditation Program
EPA	United States Environmental Protection Agency
ERH	Electric Resistive Heating
ESL	Environmental Screening Level
FID	flame ionization detector
FS	feasibility study
ft	feet
ft/day	feet per day
ft/ft	feet per foot
ft/year	feet per year
GC/MS	Gas Chromatograph/Mass Spectrophotometer
GPS	global positioning system
HSA	hollow stem auger
HI	hazard index
HMIS	United States Army's Hazardous Material Information System
HOC	hydrophobic organic compound
Hz	hertz
I-880	Interstate 880 freeway
ID	identification
IDW	investigation-derived waste
ISH	In-Situ Thermal Heating
ITRC	Interstate Technology & Regulatory Council
ITSI	Innovative Technical Solutions, Inc.
ITSI-Gilbane	Innovative Technical Solutions, Inc.- Gilbane
J	estimated result
lbs.	pounds
LNAPL	light non-aqueous phase liquid
LOGSA	Material Command Logistics Support Agency
MCL	maximum contaminant level
mg/kg	milligram per kilogram
MIP	membrane interface probe
MPE	Multi-Phase Extraction
MSD	matrix spike duplicate
mS/cm	millisiemens per centimeter
msl	mean sea level
MTCA	Model Toxic Control Act
mV	millivolt

Abbreviations and Acronyms (continued)	
MW	Monitoring Well
NAD83	North American Datum of 1983
NAPL	non-aqueous phase liquid
NAVD88	North American Vertical Datum of 1988
NCP	National Contingency Plan
NE	not established
NELAP	National Environmental Laboratory Accreditation Program
NPDES	National Pollutant Discharge Elimination System
ng/L	nanograms per liter
NOAA	National Oceanic and Atmospheric Administration
NPL	National Priorities List
NTCRA	Non-Time Critical Removal Action
O&M	Operation and Maintenance
ORP	oxidation-reduction potential
OSWER	Office of Solid Waste and Emergency Response
OTIE	Oneida Total Integrated Enterprises, LLC
PAHs	Polycyclic Aromatic Hydrocarbons
PA/SI	Preliminary Assessment/Site Investigation
pceA	gene encoding the PCE to TCE reductive dehalogenase PceA
PG	Professional Geologist
PG&E	Pacific Gas & Electric
PID	photo-ionization detector
PMOS	partially miscible organic solvent
POC	Point of Contact
POTW	Publicly Owned Treatment Works
ppbv	parts per billion per volume
ppmv	parts per million per volume
PPE	personal protective equipment
PRSC	Post Removal Site Control
PSCC	Packaging, Storage, and Containerization Center
PVC	polyvinyl chloride
QA	quality assurance
QC	quality control
RAO	Removal Action Objectives
RDase	reductive dehalogenase (enzyme)
RI	remedial investigation
RL	reporting limit
RSL	regional screening level, US EPA Region 9
SAIC	Science Applications International Corporation
SAP	Sampling and Analysis Plan

Abbreviations and Acronyms (continued)	
SARA	Superfund Amendments and Reauthorization Act of 1986
Sch	schedule
SCI	Subsurface Consultants, Inc.
SFRWQCB	San Francisco Regional Water Quality Control Board
SHSP	Site-Specific Health & Safety Plan
SIM	selective ion monitoring
Site	AMCO Chemical Superfund Site, Oakland, California
SL	screening level
SPRR	Southern Pacific Railroad
SPT	standard penetration test
SSHO	Site Safety and Health Officer
SSHP	Site Safety and Health Plan
SVOC	semi-volatile organic compound
tceA	gene encoding the TCE to VC reductive dehalogenase TceA
TCLP	Toxicity Characteristic Leaching Procedure
TDS	total dissolved solids
TEF	toxicity equivalence factor
TEQ	toxic equivalency quantity
TOC	total organic carbon
Todd	Todd Engineers, Inc.
µg/L	micrograms per liter
µg/m3	micrograms per cubic meter
UPRR	Union Pacific Railroad
USA	Underground Service Alert of Northern California
USCS	Unified Soil Classification System
US EPA or EPA	United States Environmental Protection Agency
USGS	United States Geological Survey
UST	underground storage tank
UTL	upper tolerance limit
vcrA	gene encoding the TCE to ethene reductive dehalogenase VcrA
VFA	volatile fatty acid
VI	vapor intrusion
VOA	volatile organic analysis
VOC	volatile organic compound
XRF	X-Ray Fluorescence Spectrometer

1.0 INTRODUCTION

This Engineering Evaluation/Cost Analysis (EE/CA) describes proposed activities to address an area of the AMCO Superfund Site (Site) located at 1414 3rd Street, Oakland, California, with the highest levels of volatile organic compounds (VOCs) in the soil and groundwater. This EE/CA provides supporting documentation for conducting a Non-Time Critical Removal Action (NTCRA) at the Site and was prepared in accordance with the *Guidance on Conducting Non-Time Critical Removal Actions Under CERCLA* (EPA, 1993).

1.1. EE/CA BACKGROUND

The EE/CA is a streamlined, focused document that provides site characterization data, provides a streamlined assessment human health and ecological risks, evaluates various response alternatives, recommends a preferred response alternative, and provides a vehicle for public involvement.

The goals of the EE/CA are to identify the objectives of the removal action and to analyze the effectiveness, implementability, and cost of various alternatives that may satisfy these objectives. The EPA is performing this EE/CA through its consultant Oneida Total Integrated Enterprises, LLC. (OTIE), under EPA contract #ES-S9-13-01, Task Order 0007.

1.2. PROJECT OBJECTIVES

The project objectives of this EE/CA are summarized below:

- Satisfy the environmental review requirements for removal actions at the Site;
- Satisfy administrative record requirements for documentation of removal action selections; and
- Provide a framework for evaluating and selecting alternative technologies.

2.0 SITE DESCRIPTION AND BACKGROUND

2.1. SITE DESCRIPTION, OPERATION AND HISTORY

The Site (APN 004-0073-010-0) is an approximately 0.9-acre property located at 1414 3rd Street, Oakland, Alameda County, California (Figure 2-1). The local area is known as the South Prescott neighborhood in the West Oakland part of the city. The Site is bordered on the north by a vacant lot owned by Bay Area Rapid Transit (BART), on the west by residences, on the south by 3rd Street and on the east by Mandela Parkway. An industrial property leased to the National Railroad Passenger Corporation (Amtrak) is located directly south of the Site and 3rd Street. A parking lot is located to the east of the Site along Mandela Parkway. The nearest residences are located along 3rd and Center Streets immediately adjacent to the Site. A municipal park (South Prescott Park) lies southwest of the property, across 3rd Street. The West Oakland BART station is located one block north of the Site. The Cypress Freeway (Interstate I-880) is located just south of the Site and passes over 3rd Street near the southeast corner of the property.

2.1.1. Materials Manufactured, Stored and/or Disposed On-Site

During operation of the Site, bulk chemicals were off-loaded from a rail spur on-site and stored in drums and storage tanks and later repackaged into smaller containers for resale. Bulk chemical storage facilities included up to 12 aboveground storage tanks (ASTs) and two 10,000-gallon underground storage tanks (USTs), as well as numerous drums. In addition, a pipe network, currently buried between layers of concrete, was used for chemical transfer at the Site. Transfer activities may have included unloading rail and truck tankers, filling tanks and drums, and transferring chemicals between tanks. The pipe network is known to have extended along the rail spur in the central and south central portion of the Site, and, based on field observations (CH2M Hill, 2011), is believed to have extended to the western portion of the Site.

Available records indicate that a wide range of commercial and industrial chemicals were handled at the Site. The classes of chemicals included: chlorinated and non-chlorinated organic solvents, petroleum hydrocarbons, organochlorine pesticides, organophosphate pesticides, ethylene glycol and other glycol products, organic acids, creosote, and inorganic salts. Table 2-1 provides a list of specific compounds and products known to have been handled at the Site. The list of compounds handled at the Site is based on available surviving records, including the AMCO 1965-66 batchbook, AMCO 1971-1992 batchbook, and the United States Army's Hazardous Material Information System (HMIS, a database maintained by the Material Command Logistics Support Agency [LOGSA], Packaging, Storage, and Containerization Center [PSCC], Packing and Transportation Division) (Science Applications International Corporation [SAIC], 2004).

2.1.2. Site Operational History

The Site was historically used for a range of industrial purposes and is currently subleased to local artists and businesses for commercial uses. The EPA conducted an analysis of aerial photographs of the area to determine past uses (Woods, 2003, and Mack, 2007). In addition, past uses were researched during the preparation of the Remedial Investigation (RI) (CH2M Hill, 2011) and the RI Addendum (ITSI-Gilbane, 2014) and by other interested parties (Caltrans, 1998). The findings from these sources are summarized below.

1869 - 1951: The area now known as the South Prescott neighborhood was purchased in 1869 and was subsequently developed due to its ideal location near the Port of Oakland and rail transportation. The housing adjacent to the Site dates from the late 1880's. In 1902, vacant lots and residential buildings occupied the Site and by 1912, a building identified as both a "kitchen boiler warehouse" and an

Anheuser Busch storehouse had been built on the Site. In the early 1930s, Sunset Supply Company, a bottle and rag dealer began operating at the Site. By 1951, the Site was occupied by Walter R. Cole and Company, a welding and tank works facility.

1957 (Caltrans, 1998): Aerial photos indicate an industrial complex located southwest of the Site on the south side of 3rd Street in the area that is now the eastern portion of South Prescott Park. The facility was reportedly a fertilizer factory and warehouse.

1959 (Woods, 2003): Residential buildings remain on parcels currently known as the Small and Large Vacant Lots (adjacent to the Site). Major rail yards are present both south and to the east of the Site. The Southern Pacific Railroad (SPRR), now known as the Union Pacific Railroad (UPRR) rail yard is to the south and a rail freight terminal was located to the east side of Cypress Street (now named Mandela Parkway).

1967 (Woods, 2003): East of the Site, buildings and railroad spurs associated with the freight terminal present in 1959 have been removed. Industrial and residential buildings in the area between 5th, Cypress, Center, and 7th Streets are no longer present, having been removed to make way for the future West Oakland BART station.

1967 (CH2M Hill, 2011): The AMCO Chemical building was constructed and a rail spur now extends onto the Site along the western side of the building. At least four vertical tanks, one near the western edge of the Site and three adjacent to the rail spur, have been installed. In addition, aerial photographs of the Site indicate possible disturbed ground near the central portion of the Site where the USTs were located. It is believed the USTs were installed prior to 1970, most likely in the 1960s.

1976 (Caltrans, 1998): The land on the south side of 3rd Street, from approximately Henry Street to Mandela Parkway, was leased by the railroad to Bobo's Junkyard, a junkyard and auto dismantling business.

1977 (Woods, 2003; Mack, 2007): An access road was built through the parcel adjacent to the Site, connecting the north end of the Site to Center Street to the west. A second railroad spur was constructed on the east side of the AMCO warehouse building. At least one additional vertical tank was installed adjacent to the existing rail spur. A review of property records and aerial photographs indicate the following uses surrounding the Site:

- Alexander's Ragtime Auto Wreckers operated a salvage yard on the property immediately north of the Site (CDM, 1999).
- A commercial/industrial facility was constructed on the east side of Cypress Street.
- The fertilizer factory and warehouse structures southwest of the Site on the south side of 3rd Street were demolished.

1980 (CH2M Hill, 2011): Ten ASTs are identified from an aerial photograph of the Site. The ASTs included the five tanks previously observed, one additional vertical tank and a horizontal tank along the on-Site rail spur, and three vertical tanks in the northeastern area of the Site. The salvage yard operations located at the parcel adjacent to the north boundary of the Site (currently known as the BART vacant lot) have encroached onto the Site and the 346 Center Street property.

1986 (Engineering Science, 1986): The Site Investigation Report describes various chemical handling and storage facilities, including ASTs, USTs, drum storage areas, a warehouse, and a railroad spur. The report indicates that one additional vertical tank is present in the northeastern area of the Site. In addition, the

report describes condition and use of the former icehouse (located in the northeastern area of the Site). The icehouse was used for drum storage even though it sustained significant fire damage and did not have a roof. The warehouse was used for both drum storage and repackaging chemicals into different containers

1987 (CDM, 1999): The junkyard property immediately north of the Site was purchased by BART and the debris removed.

1989 (Mack, 2007): The ASTs and several buildings were removed, leaving the warehouse as the primary remaining structure on the Site. The icehouse and drum storage sheds on the west side of the Site remain, but all have significant damage and do not have roofs. Most of the drums observed during the DTSC inspection (DHS, 1988) had been removed. The automobile junkyard south of 3rd Street was closed and a metal salvage operation started operation.

1989 (ITSI-Gilbane, 2014): AMCO ceases operation at the Site and the property is purchased by DC Metals under a limited partnership with Cypress Street Investments. All drums, ASTs, and the damaged structures (the icehouse and drum storage sheds) were removed. There is no record of the removal of the USTs (Ecology and Environment, 2001). Concrete pavement was placed over most of the Site (Cherry, 2012). The concrete is uneven, varies in thickness and does not have reinforcement.

1989 October (CH2M Hill, 2011): The debris/salvage yard located north and adjacent to the Site is removed, although debris is still evident at the facility. The ASTs have been removed. The tank pad for the vertical tank along the western edge of the Site remains in place.

1989 October: During the Loma Prieta Earthquake the portion of the I-880 (Cypress) Freeway that passes through the neighborhood sustained significant damage and was demolished. In response to community concerns, I-880 was rerouted around the neighborhood to just south of the Site. The new I-880 elevated structure passes over the southeastern corner of the Site. To construct the freeway, Bobo's Junkyard was closed along with a portion of the northern railroad yard located south of 3rd Street. After completion of the freeway, the South Prescott Park was constructed just south of the Site.

1989 December (CH2M Hill, 2011): Disturbed ground, as well as a backhoe and dozer, are noted in the central portion of the Site. It is likely that the USTs were removed during this period. Based on field observations, the pipe network does not appear to have been removed, except in the immediate vicinity of the removed USTs.

1989 – 1998: DC Metals operates a scrap metal yard at the Site.

1997 – 1998: The EPA constructs and operates a Soil Vapor Extraction (SVE) treatment system to remove VOCs near the Site entry on 3rd Street. The system operated from January 1997 to July 1998.

1998 – 2009: Cable Moore, Inc. leased the property from DC Metals and used the Site for cable storage and fabrication operations.

December 2009 – **October 2014**: The property and buildings at 1414 3rd Street were not in use.

Five residences adjoin the west boundary of the Site and face Third and Center Streets. The large vacant lot to the northwest and west of the Site was fenced and locked and no operations were evident. To the north of the Site, the BART vacant lot is currently planted with bamboo near the property line. No bamboo was noted on the Site. The property on the east side of Mandela Parkway is currently used as a parking lot. To the south of the Site, Amtrak is using a portion of the land under the elevated I-880 freeway south of 3rd Street as an equipment and supply storage area for their maintenance facility.

2014 October – Current (February 2015): The warehouse and office spaces have been leased and are currently in use as a commercial space.

2.1.3. Regulatory History (Federal, State, Local) and Past Response Actions

1986: Site Investigation for AMCO

In March 1986, Engineering Science, a contractor for AMCO, collected six surface soil samples from six locations throughout the facility (ES 1986). Samples were analyzed for VOCs, total oil and grease, and metals by unspecified methods. Vinyl chloride was not detected in any of the samples; however, 1,1,1-trichloroethane (1,1,1-TCA) and 1,1-dichloroethane (1,1-DCA) were detected at maximum concentrations of 25,500 micrograms per kilogram (µg/kg) and 2,100 µg/kg, respectively. Total oil and grease were detected at concentrations ranging from 170 milligrams per kilogram (mg/kg) to 7,700 mg/kg. Arsenic, chromium, and lead were detected at elevated levels, with maximum detected concentrations of 540 mg/kg, 710 mg/kg, and 1,300 mg/kg, respectively.

1988: Department of Health Services (DHS) now Department of Toxic Substances Control (DTSC)

In response to a complaint that chemicals had been spilled on the ground at the site, DTSC conducted a site inspection and sampling to determine if hazardous waste violations had occurred (DHS, 1988). During the inspection, DTSC determined from the property owner that chlorinated and non-chlorinated organic solvents, water-soluble and oil-soluble cleaners, and other chemicals had been handled and stored at the Site. The DTSC inspector observed leaking and deteriorated drums and chemicals spills to the soil. A report of violation was drafted, but was not sent to AMCO (Ecology & Environment, Inc. [E&E], 2001).

1988: Alameda County Department of Environmental Health (DEH)

The DEH conducted an emergency response at the Site after notification that the Oakland Fire Department had observed leaking drums. The DEH investigators noted more than one hundred 5- and 55-gallon drums, many of which were corroded, bulging, or leaking. Among the drum labels noted in the investigation were acetone, 1,1,1-TCA; methanol, methyl ethyl ketone (MEK), and dry cleaning solvent (E&E, 2001). The DEH did not find that emergency action was necessary and met with the facility owner regarding required cleanup (E&E, 2001). The USTs were reported to have stored ethylene and propylene glycols (DEH, 1996). There is no documentation regarding releases from the ASTs or USTs.

1995: PG&E Utility Work Sampling

May: PG&E contractor, Smith-Reidel, collected soil samples from eight boring locations during the construction of a utility trench. Four of the borings were located on 3rd Street, immediately south of the Site. The samples were analyzed for gasoline; total extractable petroleum hydrocarbons; benzene, toluene, ethylbenzene, and xylenes (BTEX), and organochlorine pesticides. Gasoline and BTEX were detected in the samples.

June: PG&E crews noted strong odors during the construction of a utility trench on Center Street between 3rd and 5th Streets. Contractor CET Environmental Services (CET) collected six soil samples from the area, none of which contained detectable levels of vinyl chloride (E&E, 2001). Smith-Reidel, AMCO's environmental consultant, collected additional soil samples from three hand-auger borings under the sidewalk on 3rd Street, immediately south of the Site. Vinyl chloride was detected at a maximum concentration of 120 µg/kg, along with BTEX; 1,1,1-TCA; 1,1-DCA; and cis-1,2-dichloroethene

(cis-1,2-DCE). Smith-Reidel also reported the presence of non-aqueous-phase liquid (NAPL) in the trench (E&E, 2001).

1995: Caltrans Cypress (I-880) Freeway Construction Project Sampling

A contractor for Caltrans, APEX Environmental Recovery (APEX), conducted soil and groundwater sampling to characterize the area of proposed highway footings for the Cypress Freeway Construction Project (APEX, 1995). Samples were collected from areas surrounding the site: five on 3rd Street and one from Mandela Parkway. Four of the borings were collected at 10 feet below ground surface (bgs) and two borings extended to 55 feet bgs. Twenty-three soil samples and four groundwater samples from these locations were analyzed for VOCs. Vinyl chloride was detected in seven soil samples from three boring locations on 3rd Street, at concentrations ranging from 9 µg/kg to 540 µg/kg. Tetrachloroethene (PCE) was detected at 1900 µg/kg and cis-1,2-DCE was found at 18,000 µg/kg. Other chlorinated hydrocarbons including trans-1,2-DCE; 1,1,1-TCA; and BTEX were also detected in the soil collected from borings on 3rd Street. Groundwater was sampled at five locations (four wells along 3rd Street and one on Mandela Parkway). Samples were collected at 10 feet bgs (four borings) and 55 feet bgs (two borings). Vinyl chloride was detected in the groundwater derived from samples taken at three borings on 3rd Street at concentrations ranging from 30 micrograms per liter (µg/L) to 44,000 µg/L. Other contaminants found at elevated levels were: cis-1,2-DCE (81,000 µg/L), trans-1,2-DCE (290 µg/L), PCE (3 µg/L), and 1,1,1-TCA (1500 µg/L).

1996: Investigation for DC Metals

BSK & Associates (BSK), a contractor for DC Metals, collected 11 soil samples and four groundwater samples at four locations throughout the Site (BSK, 1996). Soil samples were collected from approximately 1 foot below the base of the concrete paving and at 5-foot intervals to maximum depths of 10 feet bgs, with one sample from each boring analyzed for chlorinated hydrocarbons. Groundwater samples were collected at approximately 5 to 8 feet bgs. Vinyl chloride was detected in two soil samples at concentrations of 70 µg/kg and 1,000 µg/kg, and in two groundwater samples at 0.95 µg/L and 0.98 µg/L. In addition, cis-1,2-DCE (22,000 µg/kg in soil and 5,900 µg/L in groundwater) and trans-1,2-DCE (79 µg/kg in soil and 220 µg/L in groundwater) were found. Other chlorinated hydrocarbons including PCE and TCE were also detected at elevated levels in the groundwater.

1996: PG&E Utility Work Sampling

CET, a consultant for PG&E, conducted additional soil and groundwater sampling to investigate the environmental conditions in the immediate vicinity of the utility trench on 3rd Street, immediately south of the Site (CET, 1996). Eighteen soil samples were collected from five soil borings, ranging from 8 to 16 feet bgs. Two groundwater samples were collected from the soil borings, and one grab sample was collected from water in a utility vault in the sidewalk. Five contaminants were found at elevated levels in the soil: vinyl chloride (170 µg/kg), cis-1,2-DCE (12,000 µg/kg), trans-1,2-DCE (220 µg/kg), PCE (600 µg/kg), and TCE (260 µg/kg). Three contaminants were found at elevated levels in the groundwater: vinyl chloride (290 µg/L), cis-1,2-DCE (120 µg/L) and trans-1,2-DCE (2.6 µg/L).

1996: DTSC

Investigations conducted on behalf of PG&E and Caltrans by DTSC indicated the presence of vinyl chloride and other chlorinated solvents in soil and groundwater at sample locations on 3rd Street directly south of the Site. Sampling conducted in 1996 on behalf of DC Metals documented the presence

of vinyl chloride on the property (E&E, 2001). The DTSC requested EPA assistance at the Site and EPA accepted enforcement oversight for the Site.

1996: EPA Removal Assessment

The EPA's emergency response consultant, E&E, initiated a removal assessment by collecting 26 soil gas samples on-site and at nearby residences for vinyl chloride. Vinyl chloride was detected at a maximum concentration of 5,300 parts per billion per volume (ppbv). In response to the findings, the EPA determined that an emergency response was necessary.

1997: EPA Emergency Response, Groundwater Monitoring

February: The EPA installed five monitoring wells (MW-11 through MW-14) in the central area of the Site and sampled for VOCs, SVOCs, and metals as the first step in the removal action. The following contaminants were detected at elevated levels: PCE (20,000 µg/L), TCE (310,000 µg/L), cis-1,2-DCE (20,000 µg/L), vinyl chloride (5,400 µg/L), benzene (1,200 µg/L), naphthalene (710 µg/L), arsenic (43.6 µg/L), chromium (2,380 µg/L), and lead (1,220 µg/L).

June: The EPA sampled MW-11 through MW-14 for VOCs and SVOCs and found the following contaminants at elevated levels: PCE (6,000 µg/L), TCE (250,000 µg/L), cis-1,2-DCE (28,000 µg/L), vinyl chloride (4,900 µg/L), benzene (1,200 µg/L), and naphthalene 370 µg/L).

September: The EPA sampled MW-11 through MW-14 for VOCs and SVOCs and found the following contaminants at elevated levels: PCE (3,300 µg/L), TCE (200,000 µg/L), cis-1,2-DCE (54,000 µg/L), vinyl chloride (6,100 µg/L), benzene (330 µg/L), and naphthalene (340 µg/L).

1997: EPA Emergency Response, Remedial Action

Emergency response activities conducted by the EPA at the Site included the removal of an underground chemical tank from under the sidewalk on the 3rd Street frontage of the Site, the installation of a dual-phase groundwater/soil SVE system (SVE), and continued groundwater monitoring to assess the effectiveness of the treatment system.

During the construction of the SVE system, the EPA conducted an investigation to determine if underground storage tanks remained on-site and found that the tanks had been removed and the excavation backfilled with non-native soil and debris (Mandel, EPA 1996). A 1,800-gallon UST containing oily water and sludge was found under the sidewalk on 3rd Street during the excavation for the SVE collection trenches. The tank and all excavated soil were disposed of off-site (E&E, 2001).

1997: EPA Soil Gas Sampling

The EPA's consultant, E&E, collected 12 soil gas samples for VOCs on-site. Three contaminants were found at elevated levels: TCE (12,000 ppbv), vinyl chloride (2,200,000 ppbv), and benzene (15,000 ppbv).

1998: EPA, SVE Shutdown, Soil Gas, Soil, and Groundwater Sampling

The SVE system was shut down in 1998 in response to community concerns related to air emissions from the treatment system. The EPA's consultants E&E and CH2M Hill gathered information for the Preliminary Assessment/Site Investigation (PA/SI) and continued monitoring site conditions after the SVE treatment system was shut down. In December, soil gas samples were collected at 13 locations to assess VOCs from 2-3 feet bgs. Three permanent soil gas probes were installed during the sampling

event. Three contaminants were found at elevated levels: TCE (1,100 ppbv), vinyl chloride (1,100,000 ppbv), and benzene (3,100 ppbv).

During the same event, groundwater samples were collected from wells MW-11 through MW-14 and analyzed for VOCs, SVOCs, and metals. Contaminants found at elevated levels included: PCE (8,200 µg/L), TCE (190,000 µg/L), cis-1,2-DCE (110,000 µg/L), vinyl chloride (19,000 µg/L), naphthalene (57,000 µg/L), arsenic (130 µg/L), chromium (1,100 µg/L), and lead (92 µg/L).

1999: EPA Soil Gas Sampling

In September, the EPA conducted additional soil gas sampling at the Site and adjacent properties to determine the extent and magnitude of contamination. Soil gas samples were collected from the three permanent soil gas probes on-site for VOCs and the following contaminants were detected at elevated levels: TCE (5.7 ppbv), vinyl chloride (71 ppbv) and benzene (160 ppbv). Soil samples collected on-site at 2, 5, and 10 ft bgs and were analyzed for VOCs. The following contaminants were found at elevated levels: PCE (100,000 µg/kg), TCE (1,700,000 µg/kg), cis-1,2-DCE (660,000 µg/kg), vinyl chloride (5,100 µg/kg), and benzene (6,200 µg/kg).

Soil gas sampling for VOCs at the adjacent residential properties on 3rd Street resulted in the detection of vinyl chloride (0.045 ppbv) in one crawlspace. One soil sample was collected in Prescott Park (south of the Site) at 2 ft bgs and analyzed for VOCs. Xylene was found at 6.9 µg/kg.

2000: EPA Soil Gas, Soil, and Groundwater Sampling

In April, the EPA conducted sampling to complete the PA/SI effort. Soil gas samples were collected from one of the three permanent soil gas probe locations on-site and analyzed for VOCs. The other two probe locations were not sampled because the probes at these locations contained water. Vinyl chloride was found at 820 ppbv and benzene was detected at 57 ppbv. Soil samples were collected from six locations at 5-foot intervals from 30 to 45 ft bgs and were analyzed for VOCs and metals. The following contaminants were found at elevated levels: PCE (3,700 µg/kg), and TCE (170,000 µg/kg), cis-1,2-DCE (170,000 µg/kg), vinyl chloride (81 µg/kg), and lead (40,000 µg/kg).

Groundwater samples from MW-12 through MW-14 were analyzed for VOCs and metals. Approximately 7 gallons of floating NAPL were removed from MW-14 during well purging. In addition, groundwater grab samples were collected from six temporary borings at depths ranging from 5 to 40 feet bgs at the Site. Contaminants found at elevated levels included: PCE (860 µg/L), TCE (150,000 µg/L), cis-1,2-DCE (130,000 µg/L), vinyl chloride (22,000 µg/L), arsenic (303 µg/L), chromium (6,950 µg/L), and lead (498 µg/L).

2001: EPA Preliminary Assessment and Site Investigation (PA/SI)

The EPA completed the PA/SI of the Site in January 2001. The PA/SI is documented in the *Preliminary Assessment and Site Investigation (PA/SI) Report* (E&E, 2001).

2002: EPA Soil Gas and Groundwater Sampling

Additional sampling of groundwater, soil gas, and crawlspace air was conducted in August 2002 following the PA/SI. A soil gas samples was collected from one of the permanent soil gas probes on-site and analyzed for VOCs and metals. The other two probe locations were inaccessible during the sampling event. Numerous VOCs were detected in the soil gas samples. The highest concentrations of VOCs were detected in the central portion of the Site. Vinyl chloride and benzene in soil gas were detected at

concentrations of 2,200,000 parts ppbv and 15,000 ppbv, respectively. Vinyl chloride and benzene concentrations greater than 1,000 ppbv also were detected at the north/northwestern boundary of the Site, and vinyl chloride was detected in the vacant lot to the northwest at concentrations as high as 360 ppbv.

Groundwater samples were collected from wells MW-12 through MW-14 and from wells on the neighboring property at 1401 3rd Street. The samples were analyzed for VOCs. LNAPL was observed in MW-14 and MW-13 at thicknesses of 5.4 feet and 0.20 feet, respectively. The following contaminants were found at elevated levels: PCE (690 µg/L), TCE (150,000 µg/L), cis-1,2-DCE (230,000 µg/L), vinyl chloride (14,000 µg/L), and benzene (820 µg/L).

2003: EPA National Priorities Listing (NPL)

The EPA proposed the Site for listing on the National Priorities List (NPL) of federal Superfund sites. The proposal to list the Site on the NPL was published in the Federal Register on April 30, 2003, and the Site was listed as a Superfund site on September 29, 2003.

2009: EPA Monitoring Well Installation

Due to site access issues, additional Upper Aquifer groundwater monitoring wells were installed in two phases. Twelve wells were installed in 2009 and an additional nine wells were installed in January 2012.

2010: EPA Installs Vapor Intrusion (VI) Mitigation System in Residences

EPA installed VI mitigation systems in four residences adjoining the site. This action was conducted as a Time-Critical Removal to address the potential for vapor intrusion. The basis for the action was the results of crawl space and indoor air sampling that showed the presence of site-related contaminants in crawl spaces of these homes, though not in indoor air. Due to the limited dataset for indoor air, it seemed prudent to install mitigation systems as a precautionary measure. Since 2010, the effectiveness of these systems has been periodically monitored by sampling and analyzing crawl space air, indoor air and ambient air. Results of the monitoring confirm that these systems have been effectively addressing the potential for indoor air intrusion

2011: EPA Remedial Investigation

EPA completed a remedial investigation (RI) of the Site in January 2011. The chemical of concern (COCs) include VOCs (chlorinated and petroleum hydrocarbons), SVOCs, organochlorine pesticides, PCBs, metals, and dioxins/furans. The following section is an excerpt from the RI Report (CH2M Hill, 2011):

> ***Key findings of the RI are as follows:***
>
> Several feet of LNAPL were observed floating on groundwater beneath the central area of the Site. The LNAPL consists primarily of VOCs, including PCE and TCE, but also contains SVOCs, pesticides, and dioxins/furans. The LNAPL is serving as the primary continuing source of contamination to groundwater, soil, and soil gas.
>
> The highest concentrations of contaminants in groundwater and soil gas (primarily VOCs) were generally observed in the central and south central areas of the Site, corresponding with the known locations of former chemical storage units and buried distribution piping. However, other distinct areas of elevated contamination concentrations in groundwater and soil gas were observed beneath the large vacant lot on Center Street and beneath the UPRR/Amtrak yard south of the facility, suggesting that separate releases of contaminants have occurred in these areas.

1,4-dioxane has widely migrated in groundwater from the Site, and it is expected to continue migrating. Other contaminants mobilized in groundwater are soluble arsenic, iron, and manganese. Other metals, organochlorine pesticides, PCBs, and dioxins/furans generally have limited mobility in the environment, and the extents of these compounds are limited to the immediate vicinities of their historic suspected source areas.

Groundwater contaminant concentrations beneath the central and south central portions of the Site decrease rapidly with depth. The concentrations in the deepest monitoring wells at the Site are low or below detection levels, indicating that dense non-aqueous phase liquid (DNAPL) has not migrated below approximately 20 to 30 feet bgs at the site.

The VOCs identified as key contaminants (chlorinated solvents and petroleum hydrocarbons) are undergoing significant biodegradation in groundwater. However, data suggests that the down gradient edge of the VOC plume is expanding despite the naturally occurring biodegradation.

The distributions of contaminants in soil are less centralized and more widespread than in groundwater, suggesting multiple industrial, non-industrial, and non-point sources. Many contaminants in soil, particularly lead, exceed risk criteria for industrial and residential receptors.

Elevated lead concentrations were detected at several residential properties adjacent to or near the Site. The concentrations of lead detected in the soil posed an immediate risk to residents, particularly children. A soil removal action to address the lead contamination was performed at all residential parcels occupying the same block as the Site.

2014: EPA Remedial Investigation Addendum

The EPA completed an Addendum to the RI in September 2014. The Addendum documented the sampling results of soil, groundwater, and indoor/crawl space/ambient air collected from 2009 through 2013. More specifically, the sampling efforts included:

- Extensive, additional soil characterization in the central area of the Site,
- Groundwater sampling of the gravel pack surrounding a large sewer interceptor running along 3rd Street,
- Installation of a well into the lower aquifer (Alameda Formation) followed by groundwater sampling from this well,
- Routine groundwater sampling from the monitoring well network,
- Sampling of crawlspace, indoor and ambient air in and around several residences, and
- Routine soil vapor sampling.

The following is an excerpt from the RI Addendum Report (ITSI-Gilbane, 2014):

Fate and Transport Determination

The LNAPL in the central area of the Site continues to contribute COC contamination to groundwater, especially in the shallow zone of the Upper Aquifer. Two significant processes seem to be in effect on the site. The chlorinated solvents are dissolved in the LNAPL rather than forming a DNAPL, which has limited the migration of the contaminants into the deeper groundwater at the Site. The second process is the biodegradation of many of the VOCs at the Site, which has limited the lateral movement of the VOC plume. Dehalococcoides, the microorganism associated with complete chlorinated ethene biodegradation, are present at concentrations indicative of active reductive dechlorination in groundwater associated with TCE, cis-1,2-DCE, and vinyl chloride plumes in the shallow and intermediate zones. Dissolved gases (methane, ethene, and ethane) associated with active biodegradation also are present in groundwater with elevated VOC concentrations.

Soil sampling results

Over 1500 samples were collected at 11 depths (1 ft bgs to 70 ft bgs) from 125 locations (Figure 2-2). The sampling locations included the Site and the following adjoining properties: the Large Vacant Lot, Small Vacant Lot, and Parking Lot. In addition to the soil sampling effort, a combination cone penetrometer testing (CPT) and membrane interface probe (MIP) was used to characterize the vertical soil stratigraphy and distribution of VOC contamination. 17 CPT-MIP borings were taken at depths that varied from 25.5 feet (MIP-5) to162 feet bgs (MIP-10).

The sampling results confirmed that the most significant releases of chemicals to soils occurred in the central area of the Site where bulk chemicals were transferred from rail cars or delivery trucks to storage tanks and drums. In this area, NAPL and elevated concentrations of many COCs were found at high levels including: PCE; TCE; cis-1,2-DCE; vinyl chloride; 1,1-DCA; 1,2-DCA; benzene; ethylbenzene; xylenes; 1,2,4-TMB; and 1,4-DCB. These contaminants were found in shallow surface soils to depths of 30 feet bgs. VOCs were not detected in soil samples collected below 60 feet bgs.

SVOCs (such as benzo(a)pyrene) and metals (arsenic and lead) were found in soil (typically less than 5 ft bgs) at concentrations exceeding screening levels across the Site and the neighboring properties. Pesticides (aldrin, dieldrin, DDT, DDD, and DDE) were found above their soil screening levels at the Site and the Large Vacant Lot. Pesticide contamination extends to a maximum depth of 30 feet bgs in the source area, while the vertical extent of pesticide contaminated soil at other areas of the Site generally is shallow (5 ft bgs or less).

Groundwater sampling results

Groundwater sampling was conducted at 23 shallow zone wells, 17 intermediate zone wells, and 12 deep zone wells. The highest VOC concentrations were detected in the shallow zone in the central area of the Site. The chlorinated VOC concentrations in the shallow-zone were more than an order of magnitude greater than those in intermediate zone groundwater. LNAPL (as free product) was found at measurable thicknesses in monitoring wells MW-13 and MW-14. LNAPL also was also observed at times in monitoring well RMW-02-13. These three wells are all located in the central area of the Site.

The contaminants of concern in the upper aquifer groundwater at the site included VOCs, SVOCs, metals, PCB-1260, pesticides, and dioxins/furans. Chlorinated VOCs, primarily TCE, cis 1,2-DCE, and vinyl chloride, were the major contaminants in groundwater and had a large lateral extent in both the shallow (5-15 feet bgs) and intermediate (25-35 feet bgs) zones of the Upper Aquifer.

1,4,4-dioxane was found to have the largest lateral footprint at the Site. The shallow zone plume for 1,4,4-dioxane extended from the northeastern corner of the Site (well RMW-03-15) to beyond monitoring well BMW-08, located approximately 300 feet southwest of Site. In the intermediate zone groundwater, the lateral extent of the 1,4,4-dioxane plume was smaller, but the concentrations of 1,4,4-dioxane were higher.

Other VOCs found above screening levels were: toluene, methylated benzenes, and chlorinated benzenes. The lateral footprint of the plumes for these VOCs includes the RMW-02 and RMW-12 well clusters, with the vertical extent of these VOCs was primarily within 15 feet bgs.

Pesticides, PCBs, and dioxin/furan were found in the central portion of the Site. High concentrations of arsenic and iron and, to a lesser degree, manganese, are present in groundwater associated with the VOC plumes.

October 2014: The EPA became aware that the property had been leased to a new tenant who intended to sub-lease portions of the property to local artists and businesses for commercial uses. The EPA responded to this new use of by conducting indoor air sampling of the warehouse/office space in October 2014. The sampling results (Table 3-4) indicated that site-associated vapors were intruding into

the warehouse and office spaces at levels that would not be protective under an unrestricted use scenario. The levels did not exceed commercial screening levels and were consistent with results of prior indoor air sampling results. The EPA will continue to monitor indoor air while the structures are in commercial use to better assess potential health risks to occupants and determine if mitigation is needed.

2.1.4. Structures and Topography

The Site and surrounding areas are relatively flat with ground surface elevations ranging from 8.3 to 12.3 feet above mean sea level (msl). No surface water bodies are located at or adjacent to the Site.

2.1.4.1. Buildings

The remaining structures on the site are a warehouse with an attached office and two smaller structures. The warehouse/office structure is over 50 years old and is in serviceable condition. The structure is on a raised concrete foundation with a steel frame covered with corrugated metal sheet siding.

A small, wood frame structure is located near the facility entrance on 3rd Street and may have been constructed as early as the 1920's. The other shed is located on 3rd Street at the west boundary of the site and has terracotta tile brick walls on a concrete slab foundation. The building is of indeterminate age and is in poor condition.

Buildings that no longer exist at the Site include a large chemical storage warehouse, an icehouse, and a large storage shed. The large chemical storage warehouse was located along the northern boundary of the property and was removed between 1967 and 1970. The icehouse (approximately 76 feet by 50 feet) was located in the northeastern corner of the property and was demolished between 1989 and 1993. The large storage shed (approximately 25 feet by 114 feet) was located at the western boundary of the property adjacent to the residential properties on 3rd Street and was removed in 1989.

2.1.4.2. Historic and Archeologically Significant Features

The Site is not listed, or proposed for listing, on the Federal, State or local historic registers. The surrounding neighborhood was constructed in the mid-to late 1800's and is considered historically significant by the City of Oakland. The remaining structures on the Site are a warehouse and attached office and two small sheds. The warehouse/office structure is estimated to be 50 years old and is in dilapidated, yet serviceable condition. A small wood frame structure near the 3rd street entry has a gable roof and was built in a style indicating it may have been built as early as the 1920's. The windows have been broken and the interior is in disrepair. The other remaining structure on the Site is a shed constructed with terracotta tile bricks on a concrete slab foundation. The shed is of indeterminate age and is in poor condition.

The buildings are unlikely to qualify for listing on either the federal, state or local historic registers. No significant events are known to have occurred at the facility, none of the buildings are unique in either design or the use of materials, and none of the buildings were designed or built by a recognized person of interest.

The site area was initially developed in the 1860's and there are no known archeological resources in the area. Any excavation at the site may unearth some items of historic interest, such as glass bottles. However, during prior work at the site, no historic or archeological materials have been found.

2.1.4.3. Land cover

Two small areas of the Site are unpaved: adjacent to the north end of the warehouse and a narrow easement strip along the east side of the warehouse. The remainder of the Site is paved with concrete which ranges in thickness from 1 foot to 6 feet (Figure 2-4). In some locations, the concrete cover was found to have multiple 6 inch to 12 inch layers separated by debris of similar thicknesses. The debris within these concrete layers included building debris (metal lath, glass, and wood) and soil. The soil intermixed in the debris is generally black in color and in some areas has a petroleum hydrocarbon odor. The unpaved areas of the Site are covered primarily with debris and exposed soil. There are no trees or other vegetation on the property.

2.1.4.4. Utilities

A gas line and 6-inch water line are located under the 3rd Street sidewalk at the entry to the Site. An overhead electrical line is present above the sidewalk on 3rd Street and a more recent electrical power drop is located on the east side of the warehouse. The East Bay Municipal Utility District (EBMUD) operates a major sewer line servicing the City of Oakland (the EBMUD Interceptor). The sewer interceptor is a 105 inch (inside diameter), monolithic, reinforced concrete pipe located under the 3rd Street roadway. Sampling conducted during the RI Addendum found that the EBMUD Interceptor is not acting as a preferential pathway for contaminants moving down gradient from the Site.

2.1.4.5. Transportation

The West Oakland BART station is located several blocks north of the Site. The West Oakland station is a major hub on the system and acts as a transfer point for all train lines servicing the east bay, and provides access to both the Oakland and San Francisco airports. The system has an average ridership of 400,000 people per day.

A major regional freeway (I-880) was rerouted from a location several blocks north of the Site after the Loma Prieta earthquake to the southern boundary of the Site. The neighborhood surrounding the Site has several easily accessible routes onto the freeway.

2.1.4.6. Stormwater and Drainage Channels

The drainage pathways on and near the Site were studied by EPA due to the lack of an engineered stormwater management system. Five general areas of stormwater runoff were observed. Along the western boundary of the Site, runoff generally drains to the adjacent properties. In the northwest corner, the adjacent property is the large vacant lot; along the remainder of this boundary, the adjacent parcels are generally residential properties. At the northeast boundary of the property, runoff generally drains to the municipal storm drain system along Mandela Parkway. Water from the central portion of the Site generally drains to the storm drains along 3rd Street. Due to the uneven concrete paving stormwater collects within the Site boundaries.

2.1.5. Geology and Hydrogeology

2.1.5.1. Geology:

Past studies for the Site (Subsurface Consultants, Inc. [SCI] & Todd Engineers, Inc. [Todd] 1999; CH2M Hill, 2011) have consistently found that the geological model of the Site is of a fairly uniform, layered, and laterally continuous system with two unconsolidated aquifers separated by an aquitard above consolidated bedrock.

Most of the Site is underlain by undifferentiated fill material typically four to eight feet thick, although the fill may be thinner in specific locations. Much of the early fill placed in the bay front and wetland

areas originated from dredged sediment during the construction of the Oakland Inner Harbor (SFRWQCB, 1999). The fill consists mostly of silty sand to clayey sand, typically with some moderate amounts of miscellaneous refuse (brick fragments, glass, concrete, metal debris, wood, etc.). The percentage of fines (i.e., silt plus clay) generally decreases with increasing depth. Poorly graded fine sands (Unified Soil Classification System [USCS] classification SP) are observed below 30 to 45 feet bgs. Thin lenses (ranging from a few inches to 1.5 feet thick) of sandy silt to clay are interbedded throughout the formation. The finer-grained soils in the upper 20 to 25 feet bgs exhibit lower hydraulic conductivity values than the coarser-grained soils found at depth (CH2M Hill, 2011).

Mapped native surficial deposits at the Site consist of Merritt Sand. The Merritt Sand is a fine- to medium-grained sand or silty sand with thin lenses of sandy clay and clayey silt of alluvial and aeolian origin. During the 2011 RI (CH2M, Hill), Merritt Sands were encountered from the bottom of the undifferentiated fill material to approximately 55 to 60 feet bgs at the northern edge of the facility, and as deep as 70 feet bgs south of the facility. The upper 45 feet of the Merritt Sands are loose, but become very dense below this depth.

A sharp sea level rise following the last ice age (8,000 to 11,000 years ago) caused the infilling of stream valleys incised into the Merritt Sands with estuarine mud, known as the Younger Bay Mud (Rogers and Figuers, 1991). In the most southerly and southeasterly portions of the Site, the Merritt Sand is overlain by Younger Bay Mud to a maximum depth of 15 feet bgs. At some up-gradient locations Younger Bay Mud, peat soils, and other clayey soils were observed in the shallow interval.

The Younger Bay Mud consists of very soft, organic-rich clayey silt to silty clay with abundant plant debris and thin peat lenses. Peat consists almost entirely of plant debris with little to no inorganic soil material. Locations where Younger Bay Mud and peat were encountered during the RI are consistent with the location of tidal channels that were mapped prior to landfilling and development of the area around the facility.

The Merritt Sand is underlain by the Older Bay Mud, at depths ranging from 55 to 70 feet bgs. The Older Bay Mud is typically a firm, dark greenish-gray, low-to moderate-plasticity clay with varying amounts of sand and fine gravel. The upper portion of the Older Bay Mud beneath the investigation area is primarily comprised of very dense silt with zones of dense clay (CH2M Hill, 2011). According to the hydrogeologic interpretation presented in the Hydrogeologic Investigation Report for the Oakland Harbor Navigation Improvement (-50 Foot) Project (SCI & Todd, 1999), the Older Bay Mud occurs as a laterally extensive unit ranging in thickness from approximately 50 to 90 feet.

The Alameda Formation, which generally consists of interbedded clay, silt, sand and gravel, underlies the Older Bay Mud. The Alameda Formation has a thickness of greater than 250 feet in the vicinity of the Site. Bedrock is composed of Jurassic-aged Franciscan Formation sandstone and shale, which lie more than 400 feet below the Site.

2.1.5.2. Hydrogeology:

Regional Groundwater

The Site is located in the East Bay Plain groundwater basin, which extends from San Pablo Bay in the north to Hayward in the south and from San Francisco Bay on the west to the Hayward Fault on the east. The basin is defined by the contact of the unconsolidated sediments and the bedrock. Regionally, the East Bay Plain is subdivided into two primary basins, the San Francisco and San Pablo Basins, and further subdivided into seven Sub-Areas based on geologic, geomorphic, and geographic factors (SFRWQCB, 1999).

The Site lies in the western portion of the Oakland Sub-Area along the margin of the Central Sub-Area. Shallow groundwater in this area of the basin occurs in an unconfined aquifer consisting of undifferentiated fill material and Merritt Sand. This shallow aquifer is underlain by the low permeability Older Bay Mud unit. The Older Bay Mud unit is a regionally continuous aquitard that separates the brackish to fresh water in the Merritt Sand from the relatively fresh groundwater in the sand units of the Alameda Formation. Regional groundwater flow direction in the East Bay Plain groundwater basin is east to west from the Hayward Fault to the San Francisco Bay, generally correlating to surface topography. Typically, east-west trending preferential flow pathways exist in buried stream channels throughout the majority of the basin (SFRWQCB, 1999).

Based on prior investigations, shallow groundwater flow within the western portion of the Oakland Sub-Area is generally toward the Oakland Inner and Outer Harbors, which are the closest surface water bodies. Groundwater levels on the western margin of the Oakland Sub-Area are tidally influenced, however, this influence is only observable in a few deeper wells screened in higher permeability soils, and then is only barely detectable during long-term observation using sensitive equipment. Tidal influence is not observed in any of the shallower wells at or in the vicinity of the Site (CH2M Hill, 2011).

Site Groundwater

Two unconsolidated aquifers, separated by an aquitard, are present beneath the Site. The shallow aquifer is generally unconfined and includes a thin layer of surface fill, the Merritt Sands, and isolated occurrences of Younger Bay Mud. The deeper aquifer, the Alameda Formation, is separated from the Merritt Sands and confined by a thick, laterally extensive aquitard consisting of Older Bay Mud.

Groundwater levels in the shallow aquifer fluctuate seasonally from approximately 5.5 to 8.5 feet above msl, or approximately 2.5 to 6.5 feet bgs, as a function of formation hydraulic conductivity and precipitation infiltration (CH2M Hill, 2011).

The influence of tidal fluctuations on groundwater levels at the Site is minimal. The tidal influence in shallow wells (i.e., less than 25 feet deep) was found to be not measurable during the RI investigation (CH2M Hill, 2011); however, a barely measurable tidal fluctuation of up to 0.01 foot was measured in some wells screened deeper than 25 feet bgs.

Shallow aquifer soils (0 to 25 feet bgs) exhibit hydraulic conductivities ranging from 5.6×10^{-5} centimeters per second [cm/s] (0.16 feet per day [ft/d]) to 5.4×10^{-4} cm/s (1.5 ft/d). Below approximately 25 feet bgs, the soil contains fewer fines and has correspondingly higher hydraulic conductivity values, which range from 1.4×10^{-3} cm/s (4.1 ft/d) to 2.5×10^{-3} cm/s (7.1 ft/d) (CH2M Hill, 2011).

In addition, Younger Bay Mud was found to the east of the former facility during the RI (CH2M Hill, 2011). In past studies, Younger Bay Mud has been observed in the areas generally consistent with the fringes of the historic tidal channels. The Younger Bay Mud encountered during the RI was organic-rich silty clay to clayey silt of medium plasticity. The groundwater extracted from wells screened within the Younger Bay Mud is black in color and exhibits a strong sulfur odor. This Younger Bay Mud, which has a lower hydraulic conductivity with respect to other shallow aquifer material, is not interpreted to be laterally or vertically continuous in the vicinity of the Site and therefore does not have a broad effect on groundwater flow (CH2M Hill, 2011).

Hydrogeologic investigations in the Basin have quantified the vertical permeability of Older Bay Mud material in the laboratory. The geometric mean of six samples collected from the aquitard was

2×10^{-8} cm/s (SCI & Todd, 1999). Given the three to five orders of magnitude difference between the shallow aquifer and the aquitard, the Older Bay Mud significantly retards the vertical communication of groundwater between the shallow and deep aquifers. The deep aquifer, which is defined by the lower extent of the Older Bay Mud, is estimated to occur at depths greater than 130 feet bgs beneath the Site (CH2M Hill, 2011).

Groundwater Flow Direction and Gradient

The groundwater flow direction ranges from south to southwest at the Site, toward the San Francisco Bay, with subtle variation as a function of seasonal precipitation. In the dry season, flow generally appears to be toward the southwest; in the wet season, flow is generally to the south (CH2M Hill, 2011). Groundwater gradients vary across the investigation area. Gradients north of 3rd Street are typically steeper, ranging from 0.006 to 0.008 feet per foot (ft/ft), and shallower south of 3rd Street, ranging from 0.001 to 0.003 ft/ft. The determination of groundwater flow direction south of 3rd Street is somewhat less precise due to the very small variation in groundwater levels (CH2M Hill, 2011).

Data analysis conducted during the RI indicated small, downward vertical hydraulic gradients within the shallow aquifer. The vertical gradients observed ranged from -0.074 ft/ft (i.e., downward) to 0.062 ft/ft (i.e., upward). The median vertical gradient across all well groups was -0.005 ft/ft, and the average vertical gradient was -0.006 ft/ft. Small, downward vertical gradients such as these are common in areas affected by surface infiltration of rainfall and residential irrigation. Ranges of groundwater flow velocities for the shallow aquifer have been calculated based on an estimated porosity of 0.35 and the range of hydraulic conductivity values and gradients. The calculated ranges of groundwater flow velocities are from 0.33 to 7.5 ft per year (ft/yr) and 8.6 to 48 ft/yr in the shallow and deeper portions of the aquifer, respectively (i.e., above and below approximately 25 feet bgs, respectively).

2.1.6. Sensitive Ecosystems

The Site has been developed for approximately 150 years and is paved with a concrete cap; therefore, no sensitive flora or fauna are expected to be present. The Site is located approximately 0.6 miles north of the Oakland Inner Harbor area of the San Francisco Bay and the Oakland Outer Harbor is 1.5 miles to the west. In general, the San Francisco Bay is an estuarine environment in which freshwater from the Sacramento and Joaquin Rivers mixes with saltwater from the Pacific Ocean. The I-880 Freeway and a large rail yard separate the Site from the Harbor areas.

Meteorology

Oakland, California has a temperate, Mediterranean climate typified by dry, warm summers and moderate winters due to the proximity of the San Francisco Bay. During the summer the area is cooled by maritime fog. Temperatures are moderate throughout the year, ranging from an annual average low of 45 F to an average high of 74 F. Average annual rainfall is approximately 24 inches per year, with the highest levels occurring between October and April and the lowest levels between May and August. The state of California has been in a severe drought status for the last several years. Winds near the site are typically light, 10 mph towards the east, but sometimes offshore “Diablo” winds occur in the fall. These hot, dry winds are similar to the Santa Ana winds of Southern California and raise the fire danger for the Oakland hills which lie to the east of the site (NOAA, 2014).

2.2. PREVIOUS REMOVAL ACTIONS

2.2.1. Soil Vapor Extraction System

The EPA installed a SVE system in response to concerns regarding the high levels of vinyl chloride at the site. Groundwater and soil vapor were extracted from the Site through a T-shaped underground trench located near the main entry to the site. Water and vapor were piped through an air stripper and the contaminant – air mixture was sent to an ultraviolet oxidation treatment system and then through a granulated carbon unit for final treatment. Treated water was discharged to the storm drain. The SVE treatment system operated from January 1997 to July 1998 and removed 41 lbs of vinyl chloride and 6,726 lbs of VOCs from soil and groundwater, and treated a total of 684,000 gallons of contaminated groundwater at the site. The system was shut down in response to community concerns related to air emissions from the treatment system.

During the excavation for the SVE collection trenches, a 1,800-gallon UST containing oily water and sludge was discovered. The tank, located under the sidewalk on 3rd Street, was removed along with a small volume of petroleum-contaminated soil. The tank and all excavated soil were disposed of off-site (E&E, 2001).

Following the shutdown of the treatment system, the EPA conducted groundwater, soil, and air sampling in December 1998, September 1999, and April 2000 to verify that residents near the Site were not at risk from the contamination. The results of the investigation are presented in the *Preliminary Assessment and Site Investigation [PA/SI] Report* (E&E, 2001).

2.2.2. Cleanup of Lead Contaminated Soils in Residential Yards near the Site

In 2007 the EPA conducted a removal action to remove lead contaminated soils from residential yards adjacent to the Site and replace them with clean, imported soil.

2.2.3. Installation of Vapor Intrusion Mitigation Systems

In 2010, a removal was conducted to install vapor intrusion mitigation systems in four residences adjacent to the Site in response to the results of indoor and ambient air sampling results obtained in 2009 (RI Addendum, September 2014). The data did not support VI as the primary source of VOCs detected in indoor air within the homes. Rather, VOCs present in the indoor air of these residential buildings were primarily due to the quality of the ambient air and chemicals and/or the materials used in the construction and maintenance of the buildings. Nevertheless, due to the very limited dataset, the EPA decided to install mitigation systems as a precautionary measure. Subsequent rounds of indoor air sampling, following installation and operation of the VI mitigation systems, has confirmed the effectiveness of the treatment systems in eliminating VI as a potential exposure pathway in the residences.

2.3. SOURCE, NATURE AND EXTENT OF CONTAMINATION

During the RI and the RI Addendum, 200 individual contaminants were identified in the soil, groundwater and soil vapor of the Site, with 98 identified as COCs. Soil and groundwater sampling at the Site indicates that the majority of contamination is located in the shallow groundwater zone. The primary contaminants identified during the site investigations are summarized in Table 2-2 below.

Table 2-2. Contaminants Identified During the Site Investigation

VOCs:	1,2,4-TMB, 1,3,5-Trimethylbenzene, Benzene, Carbon Tetrachloride, Chloroform, cis-1,2-DCE, PCE, Toluene, TCE, Vinyl Chloride
SVOCs:	1,4-Dioxane, 2-Methlynaphthalene, Benzo(a)pyrene, Naphthalene
Pesticides:	Aroclor 1260, 4,4-DDT, Dieldrin
Metals:	Antimony, Arsenic, Iron, Lead, Manganese

2.3.1. Location of Contaminants by Type

2.3.1.1. Light Non-Aqueous Phase Liquid (LNAPL):

LNAPL was initially found on the Site in 1995 by PG&E during utility construction work on 3rd Street (the southern boundary of the site). In subsequent sampling events conducted by EPA, LNAPL has been consistently found in the monitoring wells near the center of the Site, MW-13, MW-14, and RMW-02-13.

Table 2-3. LNAPL Found in the Monitoring Wells near the Site

Sampling Event	MW-13	MW-14	RMW-02-13
August 2002	0.2 feet	5.4 feet	Not applicable
March 2005	Not measured	3.68 feet	Not measured
January 2012	0.81	8.39 feet	4.70 feet

2.3.1.2. Groundwater

During the RI investigation, LNAPL and water were found at shallow depths (less than 35 feet bgs) in the center area of the site (MW 14). The sampling results indicated a mixture of fuel petroleum hydrocarbons and chlorinated hydrocarbons with significant concentrations of other dissolved hydrophobic organic compounds. The only contaminant found at a high concentration in the lower groundwater zone (below 35 feet bgs) was TCE. The primary contaminants found were:

Table 2-4. Primary Contaminants Found at the Site

Petroleum Hydrocarbons:	Benzene, Ethylbenzene, Toluene, Xylenes
Chlorinated Hydrocarbons:	1,1,1-TCA, 1,1-DCA, 1,2-Dichlorobenzene, cis-1,2-DCE, trans-1,2-DCE, Methylene Chloride, PCE, TCE
SVOCs and PAHs:	1,4-Dioxane, 2-Methylnapthalene, Acenaphthene, Benzyl butyl phthalate, Bis(2-ethylhexyl)phthalate, Dibenzofuran, Di-n-butyl phthalate, Fluoroanthene, Fluoranthene, Fluorene, Naphthalene, Pentachlorophenol, Phenanthrene, Pyrene
Pesticides:	4,4-DDD, 4,4-DDE, Dieldrin

In addition, dioxins/ furans, chromium, and copper were detected in the shallow groundwater. Based on the groundwater sampling conducted during the RI, it was concluded that DNAPLs are not likely present on the Site.

2.3.1.3. Soil

Thirty-nine contaminants above screening levels were found during limited soil sampling (24 locations) conducted for the RI. Soil was sampled at 1- 2 feet and 4-5 feet bgs. 1,500 samples were collected from 125 locations at depths of 1-30 feet bgs during the RI Addendum. Dioxins/ Furans were found in several locations during both sampling events. The primary contaminants found at the Site were:

Table 2-5. Primary Contaminants Found at the Site

VOCs:	Benzene, cis-1,2-DCA, PCE, Toluene, TCE, Vinyl Chloride (1,2,4-TMB and 1,3,5-TMB were not analyzed).
SVOCs:	1,4-Dioxane, 2-Methylnaphthalene, Benzo(a)pyrene, Naphthalene
Pesticides and PCBs:	Aroclor-1260, DDT, Dieldrin
Metals:	Antimony, Arsenic, Iron, Lead, Manganese

2.3.1.4. Soil Gas

In 2009, EPA collected samples from a permanent soil gas probe (RSP-07) which is located in the 3rd Street sidewalk a few feet southwest of the warehouse/office building. The following contaminants were found at concentrations above screening levels: 1,1-DCA; cis-1,2-DCE; trans-1,2-DCE; PCE; TCE; and Trichloromethane.

Samples were collected during the RI investigation (September 2010) from or near the 24 soil sample locations and from RS-07. The highest concentrations were found in the central, south-central and eastern areas of the site. The primary contaminants found on-site were: cis-1,2-DCE; trans-1,2-DCE; PCE; 1,1-DCA; and TCE.

During the preparation of the RI Addendum (February 2012), soil gas samples were collected from RSP-07. The following contaminants were found at concentrations above screening levels: 1,1-DCA; cis-1,2-DCE; PCE; and TCE.

2.3.1.5. Air

The crawlspace and indoor air of the existing office building was sampled by EPA in June 2009 and again during the preparation of the RI (September 2010). The following contaminants were found at concentrations above the screening level during both rounds of sampling: 1,1-DCA; 1,2-DCA; 1,2,4-TMB; 1,3,5-TMB; Chloroform; cis-1,2-DCE; trans-1,2-DCE; PCE; Toluene; TCE; Trichloromethane; and Vinyl Chloride. In addition, Benzene and 1,4-Dioxane were found in the indoor air at concentrations equal to the ambient air.

During the preparation of the RI Addendum, limited sampling of crawlspace and indoor air of the existing office building was conducted in February 2012. The following contaminants were found at concentrations above the screening level during this sampling event: 1,1-DCA; 1,2-DCA; 1,4-Dioxane; cis-1,2-DCE; PCE; Trichloromethane; TCE; and Vinyl Chloride. In addition, Benzene was found in the indoor air at concentrations equal to the ambient air.

2.3.2. Contaminant Levels

The primary goal of the NTCRA is to reduce potential risks associated with VI into structures and residences at and near the Site, by focusing on reducing the mass of chlorinated VOCs in the source area of the Site. The following tables summarize the contaminant levels at the site:

- Table 2-6 presents concentrations of VOCs, SVOCs and organochlorine pesticides/PCBs in LNAPL (also referred to as free product) collected from monitoring well MW-14.
- Table 2-7 provides a list of the VOCs found over the screening levels for soil.
- Table 2-8 is a list of the VOCs found over the screening levels for groundwater.

Soil sampling and groundwater monitoring well locations are depicted in Figure 2-2. The highest concentrations of TCE, vinyl chloride and cis-1,2-DCE contamination in the shallow groundwater are found in the central area of the Site and have migrated southwest (Figure 2-3).

The Removal Action Objectives (RAOs) for the Site were developed based on the highest concentrations of VOCs found in the soil, soil gas, groundwater, and the presence of LNAPL. A summary of the RAOs developed for the Site are discussed in Section 5.2.1 *Removal Action Objectives*.

2.3.3. Physical and Chemical Attributes of Contaminants

The physical and chemical characteristics of the VOCs found over screening levels in soil, groundwater and air are provided in Table 2-9.

2.4. Analytical Data

The EPA has conducted extensive soil and groundwater sampling at the Site during the preparation of the RI and RI addendum and continues to perform groundwater and air monitoring. No additional sampling data was required to prepare this EE/CA.

3.0 STREAMLINED RISK EVALUATION

In accordance with the EPA EE/CA guidance, a streamlined risk evaluation (SRE) is a type of evaluation that is intermediate in scope between the limited risk evaluation undertaken for emergency removal actions and the conventional baseline assessment normally conducted for remedial actions. It is used to help justify taking a removal action and identify what current or potential exposures should be prevented. The SRE should focus on the specific problem that the removal action is intended to address.

This NTCRA is intended to specifically address risks associated with the potential for vapor intrusion into the commercial buildings on the Site. Vapor intrusion is caused when vapors emanating from nearby or underlying VOC contaminated soils and/or groundwater enter into structures via preferential pathways, such as plumbing conduits or cracks in foundations. Risks associated with the implementation of the action (e.g. construction activities) are also evaluated.

This SRE was prepared in a manner consistent with EPA's Risk Assessment Guidance for Superfund, Part A (EPA, 1989), Part B (EPA, 1991), Part E (EPA, 2004) and Part F (EPA, 2009), as well as guidelines published by the California Environmental Protection Agency (CalEPA, 2005). The SRE is based upon the data from the RI and HHRA (CH2M Hill, 2011), RI Addendum (ITSI-Gilbane, 2014) and recent (October, 2014) indoor air sampling data included as Table 3-4 of this EE/CA and in the Administrative Record for this NTCRA.

The assumptions provided for the general public by EPA and incorporated into this SRE are conservative (i.e., representative highest exposure that is reasonably expected to occur at a site) and thus, health-protective. This SRE is a baseline evaluation that assumes exposure to contaminated media under baseline conditions without consideration of future remediation or natural attenuation of chemicals.

3.1. SELECTION AND SCREENING OF CHEMICALS FOR POTENTIAL CONCERN

The former AMCO Chemical Corporation was a chemical handling, storage and distribution facility that operated from the late 1960s until 1989. Bulk chemicals were delivered to the facility by rail and truck, off-loaded and stored in tanks and drums before being transferred to smaller containers for resale. The most significant releases of chemicals to soils occurred in the area where bulk chemicals were transferred from rail cars or delivery trucks to storage tanks or drums. The source area is located in the central southern portion of the Site and encompasses an area of roughly 160 to 200 feet (east to west) by 226 feet (north to south). In the source area, LNAPL and elevated concentrations of many COCs are present in the soil and groundwater, with contamination extending from near the surface to depths of 30 feet bgs. The COCs found, including all media across the Site, include VOCs (chlorinated and petroleum hydrocarbons), SVOCs, organochlorine pesticides, polychlorinated biphenyls (PCBs), metals, and dioxins/furans (CH2M Hill, 2011).

In the source area, LNAPL is present in two monitoring wells and high concentrations of COCs are present in soil, groundwater, and soil gas. The LNAPL is a complex mixture of organic compounds, consisting of fuel petroleum hydrocarbons and chlorinated hydrocarbons with significant concentrations of other hydrophobic organics dissolved in the LNAPL. COC contamination in the source area, including the LNAPL, is a continuing source of contamination to soil gas and groundwater, which has migrated downgradient of the Site.

3.2. CONCEPTUAL SITE EXPOSURE MODEL

The development of a Conceptual Site Exposure Model (CSEM) is an essential component of a risk evaluation. The CSEM (Figure 3-1) integrates information regarding the physical characteristics of the

site, exposed populations, sources of contamination, and contaminant mobility (fate and transport) to identify potential exposure routes and receptors to be evaluated in the risk assessment. The CSEM identifies the potential exposure pathways for the overall Site, which are quantitatively evaluated in the human health risk assessment for the Site. Sources of contamination, contaminant release mechanisms, transport/migration pathways, exposure routes, and potential receptors for the overall Site are defined in the HHRA (CH2M Hill, 2011), which is included in the Administrative Record for this NTCRA.

However, the proposed NTCRA will not address all of these exposure pathways. Rather, it will focus on:

- Human health risks associated with inhalation of vapors that could, potentially, intrude into indoor air, and
- Human health risks associated dermal contact and ingestion of soil, and inhalation of fugitive dust that could occur during the construction and implementation of the actions proposed for the NTCRA.

Potential risks associated with groundwater ingestion are not addressed in this SRE, as these are quantified in the HHRA (CH2M Hill, 2011) and will not be affected by implementation of the NTCRA. Groundwater underneath the Site is not currently used for drinking or other potable uses and it is unlikely that residents or construction workers would ingest groundwater from the source area during implementation of the proposed action.

Similarly, the SRE does not address potential risks to ecological receptors. The RI (CH2M Hill, 2011) does not include an ecological risk assessment due to the absence of ecological receptors in this industrial/commercial area. Previous evaluations have determined that the Site did not have significant populations of ecological receptors or species of special status. A similar finding of no ecological receptors resulted from the ecological risk evaluation for the South Prescott Park site (Tetra Tech, Inc. 1997).

3.3. Risk Evaluation

The Site is located at the southeastern corner of the South Prescott neighborhood of West Oakland. The neighborhood land use is mixed, consisting of commercial, industrial, and residential land use. Details on the neighborhood, including zoning, demographics, and history, are presented in the RI Report (CH2M Hill, 2011). After 1989, the main changes in the area were the construction of the Interstate 880 freeway (I-880), which opened to traffic in 1997, and the establishment of South Prescott Park. In the vicinity of the Site, I-880 is an elevated structure with a portion of the freeway crossing overhead of the southeastern corner of the Site. Amtrak is using a portion of the land under the elevated I-880 freeway south of 3rd Street as an equipment and supply storage area for their maintenance facility. Following construction of the freeway, South Prescott Park was completed on the non-residential land between 3rd Street and I-880 from Peralta Street on the west, to just east of Center Street. Land use for the properties west of the Site on 3rd Street continues to be residential. East of the Site, the property on the east side of Mandela Parkway (formerly Cypress Street) is currently being used as a parking lot.

The source area is currently paved with concrete ranging from 1 foot to 6 feet in thickness. This hard layer effectively prevents direct contact with contaminated soil and groundwater, unless it is breached (as would occur during implementation of the NTCRA proposed alternatives or potential future uses that breach the concrete layer). For this SRE it was assumed that no pavement would be present to preclude direct contact with soil. Shallow soil samples were generally collected from between 1 and 2 feet below the concrete or below ground surface in unpaved areas. Deep soil risk or subsurface risk refers to risk from exposure to contamination from surface to the maximum sample depth of approximately 7 feet.

3.3.1. Vapor Intrusion

The RI (CH2M Hill, 2011) and RI Addendum (ITSI-Gilbane, 2014) provide qualitative assessments of the potential for vapor intrusion into nearby residences, based on several rounds of crawlspace and indoor air data. The assessments compare contaminant concentrations measured in air to established screening levels for protection of human health. The sampling results for indoor and crawlspace air, soil gas and ambient air sampling were used to justify EPA's decision to implement a removal action to install mitigation systems in four residences (10 occupied units) in 2010. EPA concluded that although site-related contaminants could not be detected in the indoor air of these residences, the detection of site-related contaminants in their crawl spaces was sufficient justification for mitigation, given the limited data set and resulting uncertainties. Air sampling subsequent to the mitigation (Rounds 2 and 3, ITSI-Gilbane, 2014) has confirmed the effectiveness of the mitigation systems. Another round of indoor air sampling is scheduled for 2015.

The RI and RI Addendum also qualitatively assess the risks of vapor intrusion in the warehouse/office space on the AMCO property. A completed VI pathway and potential exposure was established for the office space on the AMCO property (ITSI-Gilbane, 2014), but the building and property were unoccupied from 2009 until Fall 2014. In October, 2014 EPA became aware that a new tenant intended to sublease the warehouse and office space to local artists for commercial activities. EPA sampled the warehouse and office space to determine the quality of the indoor air. Sampling results indicated that vapor intrusion is occurring (Table 3-4), confirming results of samples taken during the RI. The indoor air concentrations in the warehouse did not exceed commercial levels in October. The samples from the crawlspace of the office exceeded commercial screening levels; the indoor air in the office did not. The dataset is very limited so this qualitative assessment of risk likely underestimates actual risk. Currently the office space is used only for storage. EPA will continue to monitor the indoor air of these on-property structures to determine the need for mitigation.

The background, outdoor (ambient) air quality in the South Prescott neighborhood is poor as a result of sources other than the Site. VOCs detected in the ambient air include benzene, carbon tetrachloride, naphthalene, 1,4-dioxane, ethylbenzene, chloroform, and PCE. Benzene, carbon tetrachloride, and 1,4-dioxane were present in background (ambient) air at concentrations above the EPA regional screening levels for these COCs (ITSI-Gilbane, 2014).

3.3.2. Risks Due to Exposure to Soils

Excess lifetime cancer risk (ELCR) and non-cancer hazard index (HI) were calculated for both hypothetical future on-site residents and industrial/commercial workers for soil in the source area. Because the neighborhood surrounding the Site is a vulnerable community, the EPA used an excess lifetime cancer risk of $1x10^{-6}$ and a non-carcinogenic compound hazard index (HI) of 1 as the criteria at which action will be required at the Site. Many contaminants in soil exceed these risk criteria (CH2M Hill, 2011).

For a hypothetical future on-site residential reasonable maximum exposure (RME) scenario, for both shallow and deep soil the ELCR is $3x10^{-4}$. The HI for the child is 10 for exposure to shallow soil and 11 for exposure to deep soil (Table 3-1). For the adult, the HIs for exposure to the shallow soil is 1 and exposure to deep soil is 2. For the industrial worker RME scenario, the ELCR is $1x10^{-4}$ for exposure to shallow soil and $1x10^{-4}$ for exposure to deep soil. HIs for exposure to both the shallow soil and deep soil are 1. For the construction worker RME scenario, the ELCR is $1x10^{-5}$ for exposure to shallow soil and $1x10^{-5}$ for exposure to deep soil. The HI for exposure to shallow soil is 23 and the HI for exposure to deep soil is 20. The ELCR for exposure to inorganic constituents present at typical background soil

concentrations with residential exposure assumptions is $4x10^{-5}$, and the HI for the child is 10 for exposure to shallow soil.

The VOCS contributed the largest proportion of the estimated ELCR attributable to potential exposure to site-related contaminants in shallow soil at the Site, including vinyl chloride, naphthalene, benzene and ethylbenzene. The VOCs - including xylenes, naphthalene and toluene - also contributed to the non-cancer hazards attributable to potential exposure to shallow soil.

3.3.3. Streamlined Risk Evaluation Conclusions

The SRE concludes that soil in the source area of the Site may pose unacceptable risks to human health during construction activities that breach the concrete cap. In addition, future use scenarios that involve removing the cap could pose unacceptable risks primarily due to residual semi-volatiles that are not treated by the NTCRA.

The SRE further concludes that the contaminated groundwater plume underlying downgradient residences poses a risk to human occupants due to the potential for vapor intrusion. These risks are currently mitigated by ventilation systems installed in the crawlspaces or beneath a slab foundation. Vapor intrusion also poses a potential risk to commercial users of the warehouse and/or office space on the Site. The EPA is currently monitoring the indoor air quality and uses of the property to determine if mitigation is needed.

4.0 APPLICABLE OR RELEVANT AND APPROPRIATE REQUIREMENTS (ARAR) COMPLIANCE

Section 300.415(i) of the National Oil and Hazardous Substances Pollution Contingency Plan (NCP) requires Fund-financed removal actions taken under CERCLA section 104 to attain ARARs under Federal or State environmental laws or facility siting laws, to the extent practicable considering the urgency of the situation and the scope of the removal.

ARARs consist of two sets of requirements, those that are applicable and those that are relevant and appropriate. Applicable standards are those substantive standards that specifically address the situation at a CERCLA site. An applicable requirement may or may not have been specifically promulgated to apply to a CERCLA site. Requirements that are not directly applicable, but address problems or situations similar to the circumstances of the proposed removal action are considered appropriate and relevant requirements. Determination of appropriate and relevant requirements is a two-step process. The first step is to determine whether or not the requirement is relevant. The requirement is relevant if it addresses problems or situations sufficiently similar to the circumstances of the proposed response action. The second step is to determine applicability. A determination is made as to whether the requirement is well-suited to the conditions of the site.

Table 4-1 summarizes the ARAR compliance of each of the proposed EE/CA removal action alternatives.

Table 4-1. Summary of ARARs

Regulation	Description	Media			ARAR Determination	
		Soil	Groundwater	Gas (soil gas, indoor air, vapor emissions)	Applicable	Relevant and Appropriate
Waste Management						
22 CCR Division 4.5, Chapter 11 (Identification of Hazardous Waste)	These regulations define what wastes are identified as hazardous.	X	X	NA	R, MPE, ISH, EISB, AS/SVE	NA
22 CCR Sections 20210, 20220, and 20230	These regulations define what is a regulated waste (hazardous), a nonhazardous waste, and an inert waste.	X	X	NA	R, MPE, ISH, EISB, AS/SVE	NA
22 CCR Sections 66262.10-66262.89 (Standards Applicable to Generators of Hazardous Waste)	The regulations describe the responsibilities of hazardous waste generators. Specific requirements are given for the manifest system, pre-transport requirements, and exportation of hazardous waste.	X	X	NA	R, MPE, ISH, EISB, AS/SVE	NA
California Health and Safety Code Section 25123.3, Remediation Waste Staging	This regulation applies to liquid and solid hazardous waste materials temporarily stored onsite which are not RCRA wastes.	X	NA	NA	R	NA
8 CCR 5192, Hazardous Waste Operation and Emergency Response	This regulation requires EPA to implement an occupational safety and health program headed by the site coordinator. The purpose of the program is to protect employees during the work on the site.	X	X	X	R, MPE, ISH, EISB, AS/SVE	NA

Table 4-1. Summary of ARARs (*continued*)

Regulation	Description	Media			ARAR Determination	
		Soil	Groundwater	Gas (soil gas, indoor air, vapor emissions)	Applicable	Relevant and Appropriate
22 CCR Part 172 (Hazardous Materials Table, Special Provisions, Hazardous Materials Communications, Emergency Response Information, Training Requirements, and Security Plans)	These regulations describe the requirements for the transport of hazardous materials.	X	X	NA	R, MPE, ISH, EISB, AS/SVE	NA
49 CFR Part 173 (Shippers – General Requirements for Shipments and Packaging)	The regulations describe the requirements for preparing hazardous materials for transport.	X	X	NA	R, MPE, ISH, EISB, AS/SVE	NA
22 CCR Section 6624.170 – 66264.178 (Use and Management Containers)	These regulations define the responsibilities for handling hazardous waste containers stored or transferred by owners or operators of a hazardous waste facility.	X	X	NA	R, MPE, ISH, EISB, AS/SVE	NA
40 CFR Section 264.544 (d)-(f), (h)-(k) (Staging Piles)	These regulations allow soil with hazardous waste to be stockpiled for up to two years during a remedial action without triggering land disposal restrictions.	X	NA	NA	R	NA
22 CCR Chapter 18 (Land Disposal Restrictions)	The regulations require that certain hazardous materials meet minimum treatment standards prior to land disposal.	X	X	NA	R, MPE, ISH, EISB, AS/SVE	NA
40 CFR Part 268, Subpart D (Land Disposal Restrictions, Treatment Standards)	The regulations require waste containing certain chemicals either meet a certain concentration or that the generator use a specified technology prior to land disposal	X	NA	NA	R, MPE, ISH, EISB, AS/SVE	NA

Table 4-1. Summary of ARARs (*continued*)

Regulation	Description	Media			ARAR Determination	
		Soil	Groundwater	Gas (soil gas, indoor air, vapor emissions)	Applicable	Relevant and Appropriate
Water Quality						
SWRCB Order No. 2009-00090DWQ, Construction General Permit, Sections III, A, B, & D, Section V, Section VI, Section VIII	This permit requires compliance with the NPDES General Permit for storm water discharges associated with construction and land disturbance activities. The permit conditions apply to stormwater which has come into contact with contaminated materials, as well as, water which has not hot been in contact with contaminated materials.	X	X	NA	MPE, AS/SVE	NA
NPDES No CAG912003 (General Waste Discharge or Reuse of Extracted and Treated Groundwater Resulting from the Cleanup of Groundwater Polluted by Volatile Organic Compounds)	This general permit regulates the discharge of treated groundwater to surface waters.	NA	X	NA	R, MPE, ISH, AS/SVE	NA
EBMUD Special Discharge Permit	This permit establishes pretreatment requirements for short term, limited volume discharges to the POTW.	NA	X	NA	R, MPE, ISH, EISB, AS/SVE	NA
SWRCB Antidegradation Policy, Resolution 68-16	Treated groundwater disposed to a water source may not degrade the water quality of the receiving water.	NA	X	NA	R, MPE, ISH, EISB, AS/SVE	NA
SWRCB Resolution No. 92-49 (Policies and Procedures for Investigation and Cleanup and Abatement of Discharges under Water Code Section 13304)	This policy authorizes the RWQCB to oversee cleanup activities may result in that affect or threaten water quality. In addition, the regulation establishes the policies and procedures for RWQCB oversight of investigations and cleanups.	NA	X	NA	R, MPE, ISH, EISB, AS/SVE	NA

Table 4-1. Summary of ARARs (*continued*)

Regulation	Description	Media			ARAR Determination	
		Soil	Groundwater	Gas (soil gas, indoor air, vapor emissions)	Applicable	Relevant and Appropriate
Air Quality						
BAAQMD Regulation 6-1-302 (Particulate Matter)	This rule prohibits emissions equal to or greater than 20% opacity.	X	NA	NA	R, MPE, ISH, EISB, AS/SVE	NA
BAAQMD Regulation 8 (Organic Compounds), Rule 40 (Aeration of Contaminated Soil and Removal or Underground Storage Tanks), 8-40-304 through 8-4--306	This regulation limits the emissions of organic compounds from contaminated soil during excavation and stockpiling.	X	X	X	R, MPE, ISH, EISB, AS/SVE	NA
BAAQMD Regulation 8 (Organic Compounds), Rule 47 (Air Stripping and Soil Vapor Extraction Operations), 8-47-301 and 8-47-302	This regulation limits emissions of organic compounds from contaminated groundwater and soil and requires soil vapor extraction systems to be vented through a control device.	NA	NA	X	R, MPE, ISH, EISB, AS/SVE	NA
BAAQMD Regulation 8 (Organic Compounds), Rule 8 (Wastewater Collection and Separation Systems)	This regulation limits the emission of organic compounds from wastewater collection and separation systems that handle liquid organic compounds.	NA	X	NA	R, MPE, ISH, EISB, AS/SVE	NA
BAAQMD Regulation 2-2-301	This regulation requires application of the Best Available Control Technology if a source is expected to emit 10 or more pounds per highest day of precursor organic compounds, non-precursor organic compounds, nitrogen oxides, sulfur dioxide, PM10 or carbon monoxide. This rule may apply if vapor extraction causes emissions greater than the threshold limit.	X	NA	X	R, MPE, ISH, EISB, AS/SVE	NA

Table 4-1. Summary of ARARs (*continued*)

Regulation	Description	Media			ARAR Determination	
		Soil	Groundwater	Gas (soil gas, indoor air, vapor emissions)	Applicable	Relevant and Appropriate
General and Other						
22 CCR Section 67391.1 (Requirements for Land Use Covenants)	This regulation requires a land use covenant be placed on future uses for the site when a hazardous materials remain after a remedial action is taken.	X	X	NA	R, MPE, ISH, EISB, AS/SVE	NA

Abbreviations:

AS/SVE	Air Sparging with Soil Vapor Extraction
BAAQMD	Bay Area Air Quality Management District
CA	California
CCR	California Code of Regulations
CFR	Code of Federal Regulations
EBMUD	East Bay Municipal Utility District
EISB	Enhanced In-Situ Bioremediation
ISH	In-Situ Thermal Heating
MPE	Multi-Phase Extraction
NA	Not Applicable
NPDES	National Pollutant Discharge Elimination System
POTW	Publicly Owned Treatment Works
COCs	Contaminants of Concern
EPA	U.S. Environmental Protection Agency
MCLs	Maximum Contaminant Levels
R	Excavation Removal
RV	Extraction/ Soil Removal
RWQCB	Regional Water Quality Control Board
SWRCB	State Water Resources Control Board
X	Applicable

5.0 IDENTIFICATION OF REMOVAL ACTION SCOPE, GOALS, AND OBJECTIVES

The primary goal of the removal action is to protect human health and the environment by minimizing or preventing exposure to Site contaminants and preventing Site contaminants from migrating into the surrounding environment. The removal action will focus on reducing the mass of chlorinated VOCs in the source area (LNAPL source). Adsorbed, dissolved, and vapor phase VOCs will naturally attenuate after the source is removed.

5.1. STATUTORY LIMITS ON REMOVAL ACTIONS

The EPA is pursuing a fund lead removal action to reduce the levels of VOCs in the groundwater and soil at the Site through a NTCRA. On April 6, 1987, EPA Section 104(e) of the Superfund Amendments and Reauthorization Act of 1986 (SARA) amended CERCLA to raise the statutory limits for removal actions and established new exemptions to the limits.

Under SARA, the limits on removal actions increased from $1 million and 6 months to $2 million and twelve months. The exemption applies to sites, such as AMCO, where the EPA is funding the removal action. The EPA Regional Administrator is authorized to approve an exemption to the twelve-month limit for removal actions requiring more than twelve months to complete. Waivers are granted for twelve month periods. For removal actions requiring more than $2 million in funding, the Assistant Administrator (AA), Office of Solid Waste and Emergency Response (OSWER), is authorized to grant an exemption to the funding limit. The AA may delegate this authority to the Regional Administrator and waivers are granted in $2 million dollar increments. The waivers granting these exemption authorizations are known as Action Memoranda. In situations where the preferred removal action alternative selected in the EE/CA is expected to exceed these limits, the EE/CA will note that the statutory limit will not be met and the need for an exemption will be required.

All of the removal action alternatives discussed in this EE/CA exceed the $2 million dollar statutory limit. An EE/CA Approval Memorandum was prepared and submitted to EPA Headquarters in 2014. It requested approval to fund the preparation of an EE/CA with estimated costs of cleanup alternatives ranging from $4 – 10 million. The EE/CA Approval Memo was signed by the Acting Director of Office of Superfund Remediation and Technology Innovation (OSRTI) on July 22, 2014 (See Administrative Record).

The EPA San Francisco Region (Region 9) will present the proposed NTCRA for the Site at a meeting of EPA's National Risk-based Priority Panel (Priority Panel) in March 2015. The Priority Panel establishes priorities for funding new cleanup construction projects in the Superfund program. This national approach is intended as a way for each Region to list its priority projects and rank these projects against priority projects from other Regions, ensuring that scarce resources are allocated to the projects posing the most risk to human health and the environment projects on a national scale.

5.2. DETERMINATION OF REMOVAL SCOPE

The primary goal of the NTCRA is to reduce potential risks associated with VI into structures and residences at and near the Site, by reducing the mass of chlorinated VOCs in the source area. After reviewing historical site data a treatment area was selected. As shown on Figures 5-1, 5-2, and 5-3, the selected treatment area includes all areas of the property that are known or suspected to contain LNAPL and/or high levels of VOC contamination in soil and groundwater.

Additional performance evaluation sampling is recommended to optimize the removal action design of the NTCRA. The data will also serve as a baseline against which to measure removal action progress.

5.2.1. Removal Action Objectives

In order to determine appropriate RAOs for this removal action, a list of VOC COCs was developed containing all of the VOCs detected in LNAPL, soil, or groundwater as reported in the 2014 RI Addendum (ITSI, 2014). The highest detected concentrations of each COC were then compared to applicable EPA and State (SFRWQCB) screening levels.

RAOs for soil and groundwater were selected based on the SFRWQCB Environmental Screening Levels (ESLs). The Groundwater Screening Levels for Vapor Intrusion were selected as the groundwater RAO, and the soil ESLs were selected as the soil RAO. Both screening levels used were based on residential use in areas where groundwater may be a source of drinking water.

Comparison of VOC concentrations detected in soil and groundwater to newly established RAOs revealed that the primary drivers for this NTCRA will be TCE in soil, vinyl chloride in groundwater, and cis-1,2-DCE in soil. The primary drivers for the NTCRA represent the compounds with the highest ratios of detected concentrations to RAOs.

The soil and groundwater RAOs are presented in Table 5-1.

5.3. Determination of Removal Schedule

The removal action design would likely be completed in the summer of 2015, and the removal action could be implemented starting in the fall of 2015. Adverse weather, permitting issues, and coordination with utility companies could potentially delay the start date of the removal action. The start date will also depend on subcontractor availability.

The completion date for the removal action will depend on which alternative is selected, and could range from Summer 2016 to Fall 2026.

5.4. Planned Removal Action Activities

The removal actions discussed in this EE/CA are interim remedies designed to address VOCs in the source area. Non-VOC contamination is not within the scope of this EE/CA.

A Remedial Investigation and Feasibility Study (RI/FS) Addendum will be needed to characterize contamination remaining after the NTCRA, and to evaluate possible options for a final cleanup of the site.

6.0 IDENTIFICATION AND ANALYSIS OF REMOVAL ACTION ALTERNATIVES

The following sections describe the proposed removal action alternatives and discuss their effectiveness, implementability, and cost. Proposed implementation details are provided to support the estimated costs, which have been evaluated in accordance with *A Guide to Developing and Documenting Cost Estimates During the Feasibility Study* (US EPA/US Army Corps of Engineers, 2000). Actual removal action execution methods can vary from those described in this Section. Six removal alternatives for the reduction of VOCs at the Site were evaluated: No Action, Excavation and Off-Site Disposal, Multi-Phase Extraction (MPE), In-Situ Thermal Heating (ISH), Enhanced In-Situ Bioremediation (EISB) with Free Product Recovery, and Free Product Recovery followed by Air Sparging and Soil Vapor Extraction (AS/SVE).

6.1. ALTERNATIVE 1: NO ACTION

6.1.1. Description of Process/Technology

Alternative 1 is No Action. This is a baseline alternative against which to compare the other alternatives. The No Action alternative includes no further actions to manage or monitor environmental concerns at the Site.

6.1.2. Effectiveness

Under the No Action alternative, the Site would not achieve the RAOs. The remedy is not protective of human health and the environment and it would not allow for unrestricted use of the Site. VOCs would continue to flux from LNAPL to soil vapor and groundwater.

Because this alternative does not involve implementing any removal actions, there is no concern for worker safety during implementation.

6.1.3. Implementability

The No Action alternative is technically feasible to implement.

6.1.4. Cost

No costs are associated with the No Action alternative.

6.2. ALTERNATIVE 2: EXCAVATION AND OFFSITE DISPOSAL

6.2.1. Description of Process/Technology

Alternative 2 – Excavation and Offsite Disposal involves physically removing contaminated soil and groundwater from the treatment area and transporting the waste material offsite for disposal. A total of approximately 11,600 cubic yards of soil would be removed. A three dimensional depiction of the excavation volume is provided as Figure 6-1. The contaminated soil and groundwater under the warehouse/office building, sidewalk, and street would not be addressed by Alternative 2.

Implementing Alternative 2 at the Site would first involve demolishing the small building near the center of the southern property line and abandoning the existing wells within the excavation footprint. After removing the building and abandoning the wells, a tent would be installed over the entire excavation area to prevent fugitive VOC emissions and dust from impacting the surrounding neighborhood. A ventilation system would be used to keep the tent under negative pressure and prevent VOCs, dust and vehicle fumes from escaping. Vapors extracted from the tented area would be treated onsite with a granular activated carbon vapor treatment system before being discharged to the atmosphere. The

ventilation system would be operated and monitored in a manner that complies with the substantive requirements of the BAAQMD and other State and Federal agencies, as described in Section 4.

After removing the existing layer of concrete from the ground surface, sheet piling would be installed around the perimeter of the excavation footprint to facilitate dewatering. Approximately 600,000 gallons of water would be generated during initial dewatering (volume present in soil to be excavated), and dewatering would continue as needed during excavation. Extracted groundwater would be temporarily stored in above ground tanks pending transportation and offsite disposal as hazardous waste. On-site treatment and disposal of the groundwater was not found to be feasible or cost effective due to the large volume of water generated in a short period of time.

During excavation, shoring and other engineering controls would be implemented as needed to protect the structural integrity of the excavation sidewalls, subsurface utilities, and adjacent structures. For this alternative, it is assumed that sufficient engineering controls are acceptable, available, and geotechnically feasible. An engineering feasibility study would be needed to assess and design the shoring necessary to protect the existing warehouse building and utilities as well as to select proper excavation equipment for the limited work space inside the tent.

Excavated soil would be loaded into closed top (sealed) roll off bins for transportation and off-site disposal as hazardous waste. The excavation would then be backfilled with clean imported fill material. After backfilling and compacting, dewatering would be terminated and the sheet pile would be removed.

Four groundwater monitoring wells would be installed within the excavation footprint to monitor groundwater contamination levels following excavation.

The removal action timeframe for implementing Alternative 2 is approximately 3 months.

A process flow diagram for the dewatering and vapor treatment systems is presented in Figure 6-2.

6.2.2. Effectiveness of Cleanup

The following sections discuss the effectiveness of Alternative 2.

Overall Protectiveness of Public Health and the Environment

The excavation and offsite disposal alternative is moderately protective of human health and the environment. Excavation will provide immediate, complete, and permanent removal of contaminants within the excavation footprint, with the exception of LNAPL, which could potentially migrate into deeper ‘clean’ soil. Because the existing warehouse building will not be demolished, significant VOC mass (including LNAPL) may be located underneath the structure, street, and sidewalk, and would remain in place. This contamination will continue to impact groundwater and potentially present a vapor intrusion risk to workers inside the warehouse could also contaminate clean fill.

Even with sufficient engineering controls such as tenting, vapor treatment, sheet pile, shoring, and proper PPE, excavation could pose significant chemical and physical hazards to workers and nearby residents. Fugitive VOC emissions may be an issue each time the tent doors are opened to allow trucks, equipment, or personnel to enter the work area.

Excavation is a transfer technology that would involve transporting a very significant volume of contaminated soil and groundwater from the site. Approximately 19,500 tons of hazardous soil waste would be placed in an offsite landfill, and over 600,000 gallons of heavily contaminated groundwater would be disposed of at an appropriate facility.

Ability to Achieve Removal Action Objectives

The potential source material located underneath the warehouse/office building will not be removed under Alternative 2, and would continue to present a vapor intrusion risk to occupants. Because of this, the excavation alternative would fail to achieve the RAOs for soil and groundwater.

Long-Term Effectiveness and Permanence

Implementing Alternative 2 would remove the majority of the LNAPL source material present at the Site, resulting in permanent reductions in contaminant mass and vapor risk.

Based on available data, LNAPL is expected to extend under the warehouse/office building. Upon discontinuing dewatering and removing sheet pile, impacted groundwater and mobile LNAPL (if present) from under the warehouse would likely flow into the dewatered area and recontaminate the clean imported backfill.

Reduction of Toxicity, Mobility, or Volume through Treatment

Alternative 2 will significantly and permanently reduce contaminant mass present at the Site; however, VOCs in areas adjacent to the excavation (i.e. under the warehouse/office building) will likely recontaminate the treated area after dewatering is ceased. Dewatering may spread contamination, including mobile LNAPL, to deeper zones.

Short Term Effectiveness

While the treatment duration for Alternative 2 is relatively short compared to the other alternatives, implementation will involve significant short-term impacts to the neighborhood. There is a potential for fugitive VOCs, dust, noise from vehicles and equipment, and diesel truck emissions. Additionally, workers could potentially be exposed to harmful substances during excavation and waste handling activities.

6.2.3. Implementability of Removal Technology

The following sections discuss the implementability of Alternative 2.

Technical Feasibility

Excavation is a proven, reliable, and simple technology. Despite the significant geotechnical and engineering aspects to be considered, the excavation alternative has moderate to good technical feasibility. An engineering feasibility study would be necessary to design the shoring and other engineering controls. A security guard would be stationed on site at all times when crews are not actively working.

Availability

Availability of services and materials for excavation and offsite disposal is good with several qualified contractors available in the area.

Excavation will likely require specialty shoring and construction equipment; however, excavations have been successfully completed at other sites with similar technical constraints.

Administrative Feasibility

Excavation is a widely accepted remedy with minimal permitting requirements. Capital costs would be high with this alternative, and shipping hazardous material off site for disposal could lead to long term liability issues.

This alternative would meet the 12-month statutory timeframe for treatment.

6.2.4. Cost

The total cost for Alternative 2 is approximately $28,957,017.

A breakdown of costs is provided in Table 6-1. A detailed costing spreadsheet is presented in Appendix A.

6.3. ALTERNATIVE 3: MULTI-PHASE EXTRACTION

6.3.1. Description of Process/Technology

Alternative 3 – Multi-Phase Extraction (MPE) involves extracting liquid (mobile LNAPL and groundwater) and soil vapor under high vacuum from extraction wells spaced throughout the treatment area. MPE effectively removes free phase, dissolved phase, and vapor phase contamination from the vadose and shallow groundwater zones. The three constituents of the extracted stream would then be separated and addressed individually. As liquids are extracted, a cone of depression would form at each extraction well and the groundwater table would be depressed across the entire treatment area. The area-wide lowering of the groundwater table would expose previously saturated soils to vapor extraction, and the cones of depression at each extraction well would help facilitate mobile LNAPL recovery.

Implementing Alternative 3 would involve installing approximately 32 multi-phase extraction remediation wells within the treatment area, as shown in Figure 6-3. A top-loading pneumatic pump would be suspended in each remediation well for groundwater and LNAPL extraction, and vapor extraction piping would be plumbed to the top of each well casing. The liquid stream would first pass through a product separator to recover the LNAPL component, which would be pumped to an above grade double-walled product tank for temporary storage pending offsite disposal. The groundwater effluent from the product separator would be passed through an air stripper and activated carbon filter to remove VOCs, and then discharged to the East Bay Municipal Utility District (EBMUD) sanitary sewer (pending approval). The contaminated vapor effluent from the air stripper would be routed to a cryogenic condensation vapor treatment system such as the C3 Technology system offered by GEO, Incorporated (hereafter referred to as the GEO C3). Sound insulation would be installed as needed to reduce noise generated by the treatment system.

A positive displacement blower would be used to extract soil vapor from each remediation well. The extracted vapor stream would first pass through a knockout tank to remove any entrained liquids. The condensate collected in the knockout tank would be pumped into the product separator described above and passed through an air stripper and activated carbon prior to being discharged to the sanitary sewer. The vapor stream would pass through the GEO C3 vapor treatment system to condense and recover chlorinated VOCs and volatile petroleum hydrocarbons. The pure contaminant material recovered by the GEO C3 vapor treatment system would be pumped to the above grade double-walled product storage tank pending offsite disposal. The vapor effluent from the GEO C3 system would pass through a two granular activated carbon vessels in series for polishing prior to being discharged to the atmosphere.

The remediation system would be operated and monitored in a manner that complies with the substantive requirements of the BAAQMD and other State and Federal agencies, as described in Section 4.

A process flow diagram for the multi-phase extraction system is presented in Figure 6-4.

A pilot study is recommended to determine proper MPE well spacing and size the extraction and treatment equipment. Because the groundwater is very shallow, the ground surface would likely need to be sealed to prevent ambient air from being drawn into the soil vapor extraction system.

Approximately eight new groundwater monitoring wells would be installed to monitor the removal action progress.

The removal timeframe for implementation of Alternative 3 is approximately 5 years.

6.3.2. Effectiveness of Cleanup

The following sections discuss the effectiveness of Alternative 3.

Overall Protectiveness of Public Health and the Environment

Multi-phase extraction is a proven technology that would reduce health risks by treating the highly contaminated vadose and shallow saturated zones. Treatment effectiveness would be limited below the de-watered area, and VOC-laden residual LNAPL would remain below the groundwater interface. LNAPL recovery effectiveness is highly dependent on whether the LNAPL is recoverable (i.e. whether it flows into recovery wells from the formation).

Channeling and formation of preferential pathways within heterogeneous media could lead to uneven treatment and residual “hot spots”. Previous excavations, well installations, and trenches at the site will increase heterogeneity, possibly decreasing the effectiveness of MPE. Unless a polishing technology such as enhanced in-situ bioremediation (EISB) or in-situ chemical oxidation (ISCO) is implemented following multi-phase extraction, VOC-laden residual LNAPL would continue to contaminate groundwater, soil, and soil vapor after system operation is discontinued.

Multi-phase extraction is a transfer technology, meaning the contamination will ultimately be treated or disposed of elsewhere rather than being destroyed on site.

Ability to Achieve Removal Action Objectives

Alternative 3 is not likely to achieve RAOs for soil or groundwater due to the residual LNAPL that will remain at the groundwater interface and the dissolved phase contamination that will remain below the dewatered zone.

Long-Term Effectiveness and Permanence

Implementing MPE would remove considerable VOC mass in the vadose and dewatered groundwater zones, resulting in a permanent reduction of vapor risks. However, VOC-laden residual LNAPL would remain trapped in the formation not impacted by dewatering. This material would continue to contaminate groundwater, soil, and soil vapor long after the system was shut down.

In addition to VOC-laden residual LNAPL left behind in the groundwater, dissolved and adsorbed phase VOCs would remain below the dewatered zone.

Reduction of Toxicity, Mobility, or Volume through Treatment

Multi-phase extraction would provide an immediate reduction in vapor risk as soon as vacuum was applied to the extraction wells. Given sufficient time (approximately 5 years), MPE would remove mobile LNAPL and considerable VOC mass from the vadose and saturated zones and reduce toxicity, mobility and volume of contaminant mass.

VOC-laden residual LNAPL, dissolved phase, and adsorbed phase VOCs will remain if no polishing technology is implemented following MPE.

Short Term Effectiveness

MPE would provide an immediate reduction to vapor risk as soon as vacuum is applied to the subsurface, but up to 5 years of continuous operation would be needed for cumulative mass removal to reach asymptotic levels.

6.3.3. Implementability of Removal Technology

The following sections discuss the implementability of Alternative 3.

Technical Feasibility

MPE is technically feasible as a removal action alternative to address chlorinated VOCs and volatile petroleum hydrocarbons at the Site, and has been successfully implemented at many sites with similar characteristics. MPE is a reliable method to reduce source mass and VOC flux to air and shallow groundwater.

MPE is subject to channeling and formation of preferential groundwater and soil vapor pathways in heterogeneous media. The previous excavations, trenches, wells, soil borings, and sumps will contribute to this. In addition, the ground surface will likely need to be sealed to prevent the vapor extraction system from short circuiting (drawing ambient air into extraction wells).

The presence of 1,4-dioxane in the site groundwater has no impact on the technical feasibility of MPE. EBMUD does not currently have a discharge limit for 1,4-dioxane (Audrey Comeaux, EBMUD E-mail message to Dacre Bush, OTIE, November 19, 2014). In addition, the SFRWQB does not require a permit for re-injection of treated groundwater as part of a site-specific groundwater cleanup project (Stephen Hill, SFRWQCB, E-mail message to Lynn Suer, EPA, November 10, 2014).

The MPE system must be operated constantly to maintain hydraulic containment and keep the groundwater table depressed. Operational issues such as fouling and fatigue can result in down time and reduced treatment effectiveness.

Effectiveness of MPE is greatly dependent on the permeability of the subsurface. Heterogeneity, including zones of fine-grained sediment, can lead to channeling, preferential flow pathway formation, and uneven treatment.

Availability

Equipment for MPE is widely available from a variety of vendors. Vapor treatment options regarding ex-situ thermal oxidation are limited; however, GEO C3 vapor treatment equipment is available and proven effective. Advanced oxidation water treatment technology is available if 1,4-dioxane must be removed prior to discharging to the sanitary sewer, but this would significantly increase costs.

Administrative Feasibility

MPE is administratively feasible and has been implemented successfully at many similar sites, minimizing regulatory and permit condition issues. Despite its effectiveness, MPE would likely require approximately 5 years for cumulative mass removal to reach asymptotic levels. This alternative would greatly exceed the 12-month statutory limit for treatment.

6.3.4. Cost

The total cost for Alternative 3 is approximately $11,249,080.

A breakdown of costs is provided in Table 6-2. A detailed costing spreadsheet is presented in Appendix B.

6.4. ALTERNATIVE 4: IN-SITU THERMAL HEATING

6.4.1. Description of Process/Technology

Alternative 4 – In-Situ Thermal Heating (ISH) involves heating the soil and groundwater in-situ to volatilize contaminants. The evaporated contaminants are then recovered through vapor extraction and treatment. In-situ thermal heating technologies that are commonly used for remediation of soils and groundwater in source zones contaminated with chlorinated VOCs and volatile petroleum hydrocarbons include electrical resistive heating (ERH) and thermal conductive heating (TCH) [EPA, 2004]. The heat generated by ERH and TCH technologies increases the mobility of contaminants, potentially increasing migration, therefore ISH technologies are often paired with groundwater extraction to provide hydraulic containment and minimize offsite migration.

ERH utilizes electrodes installed within the treatment area. As the electricity flows from one electrode to another through groundwater and soil moisture, heat is generated due to the inherent electrical resistance of the subsurface media. Because ERH relies on groundwater and soil moisture to conduct electricity and generate heat, the maximum achievable temperature is 100 degrees Celsius (boiling point of water at the water table). As the subsurface temperature rises, VOCs volatilize and the generated steam strips the VOCs from the subsurface where they are captured by a vapor recovery system (EPA, 2004).

TCH relies on direct application of heat, generally produced by heater wells. Higher temperatures can be achieved with TCH, but the temperature drops off quickly with increasing distance from each heater well. Because of this, TCH heater wells must be spaced more tightly than ERH electrodes to achieve the even heating throughout the zone of contamination.

The primary difference between ERH and TCH is that TCH relies solely on heat conductance through the soil and groundwater. Therefore, to achieve a uniform heat profile above the boiling point throughout the treatment zone, the TCH heating elements and adjacent soils must reach temperatures up to 400º C or more in some cases. Since ERH uses the soil's electrical resistivity to generate heat, a uniform heat profile can be achieved with temperatures at boiling point. ERH, due to its relatively low temperatures as compared to TCH, has a much lower potential to affect soil matrices, subsurface utilities, and nearby structures. ERH has been applied directly below buildings at several sites with no negative impacts observed. Implementing ERH requires considerably less drilling than TCH and the overall treatment costs are generally lower. For the purposes of this EE/CA, ERH has been selected as the ISH technology for further consideration. From this point forward, the term ISH implies in-situ thermal heating using ERH technology.

Implementing ISH at the Site would involve installing approximately 70 heating electrodes, 52 multi-phase extraction wells, and 24 monitoring points for measurement of temperature, pressure, and VOC vapor concentrations (Figure 6-5). The electrodes will vary in length from 10 feet to 50 feet depending on their location in the treatment area. The final electrode lengths would be determined during the system design. Three existing groundwater monitoring wells within the treatment area would be replaced using heat resistant materials, and eight new groundwater monitoring wells would be installed for performance monitoring. The heating electrodes and multi-phase extraction wells would be installed with approximately 20 foot spacing to achieve even heating as well as sufficient vapor recovery and hydraulic containment. Approximately 16 heating electrodes, eight multi-phase extraction wells, and three monitoring points would be installed through the foundation inside the warehouse and office buildings to monitor and treat contamination underneath the structures. Due to the shallow contamination and groundwater table, the ground surface across the entire treatment area would be

sealed with a closed cell, cellular concrete. The cellular concrete cap is designed to prevent fugitive VOC emissions and vapor extraction short-circuiting and provides thermal insulation. Monitoring and engineering controls would be required to ensure that LNAPL and VOCs are not spread to new areas and VOCs are not emitted to the surface.

Each multi-phase extraction well would be fitted with a pneumatic submersible pump for groundwater (and possibly mobile LNAPL) extraction, and the wellhead would be plumbed to the vapor extraction system for recovery of contaminant vapors and steam. Extracted groundwater would pass through a product separator to recover LNAPL, bag filters to remove solids, and a treatment system composed of air stripping and liquid-phase granular activated carbon technologies to remove VOCs. Sound insulation would be installed as needed to reduce noise generated by the treatment system.

Treated groundwater would be re-injected at heating electrodes to maintain proper moisture levels (as needed). A portion of the extracted groundwater would be discharged to maintain hydraulic containment or discharged to the EBMUD sanitary sewer. Groundwater is extracted from multi-phase extraction wells and re-injected at electrodes at a rate of approximately 0.1 gallons per minute (gpm) per 10 feet of electrode during treatment. Injecting groundwater helps to prevent electrode overheating, maintain electrical connectivity with the soil, and increase convective heat transfer as the energy produced near the electrodes is spread throughout the treatment zone via fluid flow. Groundwater is typically extracted at a rate approximately 5% higher than it is re-injected in order to provide hydraulic containment and prevent migration of mobilized contaminants. The excess groundwater would be discharged to the sanitary sewer.

The presence of 1,4-dioxane in the site groundwater has no impact on the technical feasibility of ISH. The SFRWQB does not require a permit for re-injection of treated groundwater as part of a site-specific groundwater cleanup project (Stephen Hill, SFRWQCB, E-mail message to Lynn Suer, EPA, November 10, 2014). In addition, EBMUD does not currently have a discharge limit for 1,4-dioxane (Audrey Comeaux, EBMUD E-mail message to Dacre Bush, OTIE, November 19, 2014).

The heated soil vapor and steam pulled from each extraction well would first pass through a condenser and knockout tank to condense and remove moisture. Condensate from the condenser and knockout tank would be routed to the inlet of a product separator. The vapor stream would then be pumped into a GEO C3 vapor treatment system for primary VOC treatment, followed by granular activated carbon for polishing. The GEO C3 system would also be used to treat the VOC-laden air generated by the air stripper. Product recovered by the GEO C3 system and product separator would be pumped into an above grade double-walled tank for temporary storage pending offsite disposal.

Bench scale testing is recommended by vendors to confirm feasibility of ERH and design electrode and extraction well spacing.

The remediation system would be operated and monitored in a manner that complies with the substantive requirements of the BAAQMD and other State and Federal agencies, as described in Section 4.

A process flow diagram for the ISH system is presented in Figure 6-6.

6.4.2. Effectiveness of Cleanup

The following sections discuss the effectiveness of Alternative 4.

Overall Protectiveness of Public Health and the Environment

ISH is a proven and reliable technology that should considerably reduce risks to public health and the environment by treating both the vadose and saturated zones within a rapid timeframe. Implementing ISH will provide an immediate reduction to vapor risks as soon as vacuum is applied to the vadose zone. ISH is the best available technology for quickly, effectively, and safely removing VOCs (including LNAPL) from the subsurface.

ISH is a transfer technology, in that it will involve disposing of contaminant mass offsite. However, this technology will greatly reduce the waste volume leaving the site, especially when combined with the GEO C3 process that condenses the extracted contaminant material to nearly pure levels.

The technology is energy intensive in the short term.

Ability to Achieve Removal Action Objectives

Of all the removal action alternatives considered in this EE/CA, ISH has the highest likelihood of achieving RAOs for soil and groundwater. ISH addresses LNAPL, vapor phase, dissolved phase, and adsorbed phase VOCs across all depths of the entire treatment area. VOC concentration reductions in excess of 98% are commonly achieved within short removal action timeframes.

Long-Term Effectiveness and Permanence

ISH is expected to effectively remove considerable VOC mass from the subsurface by altering the composition of the LNAPL. This results in greatly diminished contaminant flux into soil vapor and groundwater. By removing the source of continued groundwater and soil vapor contamination (LNAPL), ISH will provide long-term reductions in the levels of contamination at the Site. The heat generated by ISH lingers in the subsurface long after the system is shut down. The elevated temperature may enhance and accelerate the naturally occurring processes that degrade contamination by stimulating thermophilic biological activity. Implementing EISB (injecting hydrogen donor substrate) following ISH can further accelerate the rate of biodegradation.

If the complete source area is not heated, adjacent source material will re-contaminate the treated area (“donut hole effect”). This effect would be minimized at the Site by implementing ISH over the majority of the source area, including the contaminated area underneath the warehouse/office building.

Reduction of Toxicity, Mobility, or Volume through Treatment

ISH technology can be expected to provide good to excellent reduction of toxicity, mobility, and volume through treatment. Implementing ISH will provide an immediate reduction of vapor risk as soon as the system is turned on and vacuum is applied to the subsurface. Contaminant mobility will be increased by ISH, however this is mitigated through vapor extraction and hydraulic containment.

ISH technology is the most efficient means for removing VOCs from soil and groundwater in-situ.

Short Term Effectiveness

With the exception of excavation, ISH has the shortest removal action timeframe of any alternative considered. Once infrastructure is built, the system can operate continuously with minimal disruption to the community or adjacent structures. With instant reductions of vapor risk upon startup and a total removal action timeframe of approximately 6 months, ISH scores very well for short-term effectiveness.

Noise, dust, and traffic impacts will be associated with initial construction activities; however this is not unique to the ISH alternative. Only excavation has a shorter removal action timeframe than ISH, but excavation involves considerably higher risk to contractors and the surrounding community during implementation.

6.4.3. Implementability of Removal Technology

The following sections discuss the implementability of Alternative 4.

Technical Feasibility

Over the past 10 years, ISH has become a reliable and proven technology. Site conditions, geology, and existing utility infrastructure are amenable to ISH, and ample space is available for treatment equipment.

The shallow groundwater table will likely necessitate sealing the ground surface with cellular insulating concrete, possibly after removing the existing thick, discontinuous layer of concrete. Sealing the ground surface would help trap heat and prevent fugitive VOC emissions.

Security would be a significant concern with this alternative due to heavy use of copper, however this would be addressed by maintaining a security guard on site 24 hours a day. High voltage electrical lines may present a safety issue to vandals or burglars, but this issue would be mitigated through on-site security guards and automatic safety shutoffs.

Availability

The equipment and resources necessary for timely and successful implementation of ISH are readily available despite the fact that only four vendors exist in North America. In addition, only one vendor supplies the C3 vapor treatment system that would be required due to community concerns about air emissions.

Administrative Feasibility

Aside from excavation, ISH is the only alternative likely to meet the statutory limits of 12 months for treatment. ISH has been implemented at several similar sites in the area, aiding regulatory acceptance.

Implementing ISH requires significant infrastructure, likely requiring building and safety permits. Utility companies would be relied upon to install necessary infrastructure, possibly resulting in delays.

6.4.4. Cost

The total cost for Alternative 4 is approximately $8,522,140.

A breakdown of costs is provided in Table 6-3. A detailed costing spreadsheet is presented in Appendix C.

6.5. Alternative 5: Enhanced In-Situ Bioremediation with Free Product Recovery

6.5.1. Description of Process/Technology

Alternative 5 – Enhanced In-Situ Bioremediation (EISB) with Free Product Recovery involves recovering NAPL from the subsurface and then implementing EISB. EISB would involve addition of an electron donor to create the reducing conditions necessary for in-situ bioremediation of chlorinated VOCs, followed by addition of an electron acceptor for treatment of volatile petroleum hydrocarbons. The addition of an electron donor allows certain anaerobic microbes to substitute hydrogen for chlorine on chlorinated contaminant molecules, thus dechlorinating the compounds and producing non-toxic byproducts. In this reaction, hydrogen (the electron donor) is oxidized while the chlorinated ethene (the electron acceptor) is reduced. PCE is converted to TCE, then dichloroethene (DCE, either cis-1,2-DCE or trans-1,2-DCE), then vinyl chloride, and finally ethene with the removal of each chloride ion. This is a very slow and unstable naturally occurring process, but can be greatly accelerated through the addition of a hydrogen donor.

After completing the reductive dechlorination phase, an electron acceptor would be added for treatment of petroleum hydrocarbons. Due to the anaerobic conditions at the site, sulfate is selected as the electron acceptor instead of oxygen. In this case, sulfate is reduced while the petroleum hydrocarbons are oxidized.

In-situ bioremediation is an aqueous process. EISB does not provide effective vadose zone treatment, nor is it an effective means for treatment of LNAPL. In order for EISB to be effective, it must be preceded by free product recovery. If LNAPL is not removed prior to implementing EISB, it will remain a source for continued groundwater contamination. This would likely result in significant rebound of contaminant concentrations in groundwater after terminating EISB treatment.

Alternative 5 would involve installation of approximately 47 new remediation wells and eight new groundwater monitoring wells, as shown in Figure 6-7. Approximately 22 of the remediation wells (those within the area containing LNAPL) would serve dual purposes as product recovery wells and extraction/injection wells. (Figure 6-8) The remediation wells located within the 45-foot deep treatment area would be constructed as dual nested wells to help ensure even substrate distribution across the entire contaminated zone (upper-screened interval used for product recovery, as applicable).

Down-well product recovery pumps (skimmers) would be used to extract mobile LNAPL from the groundwater interface prior to beginning bioremediation. Extracted product would be conveyed to an above grade dual-walled tank for temporary storage prior to offsite disposal. Product recovery would commence for a period of approximately three years prior to implementing EISB.

Following recovery of mobile LNAPL, chlorinated VOC treatment would be implemented through the addition and recirculation of sodium lactate and emulsified vegetable oil substrate. Groundwater would be pumped from extraction wells using submersible pumps, amended with substrates, and re-injected into the injection wells. An inline water-driven injector would be used to add substrate to the extracted groundwater. Continued recirculation of groundwater would help ensure even mixing and direct contact between remediation substrates and contaminated groundwater.

After approximately 5 years of chlorinated VOC treatment (reductive dechlorination) and verification that chlorinated VOC treatment is complete, the sodium lactate and emulsified vegetable oil substrate would be replaced by sulfate (electron acceptor) to accelerate biodegradation of volatile petroleum hydrocarbons. Sulfate would be injected and recirculated for a period of approximately 3 years.

Pilot testing including LNAPL transitivity testing and aquifer testing is recommended to determine well spacing and design. Laboratory bench scale and field pilot testing are recommended to determine substrate type and quantity.

The remediation system would be operated and monitored in a manner that complies with the substantive requirements of the BAAQMD and other State and Federal agencies, as described in Section 4.

The removal action timeframe for implementation of Alternative 5 is approximately 11 years.

A process flow diagram for the product recovery and EISB system is presented in Figure 6-8.

6.5.2. Effectiveness of Cleanup

The following sections discuss the effectiveness of Alternative 5.

Overall Protectiveness of Public Health and the Environment

This alternative would remove the majority of mobile LNAPL from the site and destroy dissolved phase VOCs in-situ with relatively little energy use compared to the other alternatives. Because the dissolved-

phase contaminants would be destroyed in-situ, there would be no need for continued offsite disposal of hazardous materials following the initial product recovery phase.

The biological processes exploited by this alternative only occur below the groundwater table; therefore, contamination (including residual LNAPL) would remain in the vadose zone and in the saturated zone, presenting a continued source of soil, soil vapor, and groundwater contamination.

Due to the extensive timeframe required for LNAPL recovery at the onset of treatment, this alternative does not provide any immediate reduction of risk to public health or the environment. LNAPL recovery effectiveness is highly dependent on whether the LNAPL is recoverable (i.e. whether it flows into recovery wells from the formation).

Effectiveness of EISB is limited by distribution factors. Even if LNAPL recovery were successful overall, residual LNAPL would remain trapped within the pore spaces of fine grained sediments. Fine-grained soils and subsurface heterogeneity can result in channeling as injected substrates flow through preferential pathways, potentially resulting in uneven treatment. Additional monitoring and engineering controls would be required to ensure that short-circuiting does not occur, and that LNAPL remaining after the product recovery phase is not spread to new areas during high-pressure substrate injection.

Ability to Achieve Removal Action Objectives

Given sufficient time (approximately 11 years), this alternative could effectively decrease LNAPL mass and reduce dissolved-phase contaminant concentrations within the treatment area. LNAPL would remain at residual saturation within the vadose and saturated zones, presenting a vapor intrusion risk or serving as a continued source of groundwater contamination.

Alternative 5 is unlikely to achieve RAOs for soil because residual LNAPL and vadose zone contamination will remain after treatment. The residual LNAPL and vadose zone soil contamination would remain a source for groundwater contamination, likely resulting in significant rebound after treatment is completed.

Long-Term Effectiveness and Permanence

EISB is expected to be highly effective at treating the saturated zone based on current site geochemistry. However, residual LNAPL in the vadose and saturated zones will continue to act as a source of groundwater, soil, and soil vapor contamination.

Distribution limitations, including fine-grained sediments and subsurface heterogeneity, may lead to some areas not being treated effectively. Pockets of adsorbed and dissolved phase VOCs remaining after treatment could continue to contribute to groundwater and soil vapor contamination.

Reduction of Toxicity, Mobility, or Volume through Treatment

Product recovery followed by EISB would considerably reduce mobile LNAPL mass and destroy toxic VOCs in groundwater by converting them to non-toxic end products. Because residual LNAPL would remain below the groundwater table and the vadose zone would remain untreated, this technology would not result in immediate reductions of vapor risk.

Short Term Effectiveness

The EISB approach has the longest removal action timeframe of any alternative considered, requiring approximately 11 years of treatment. The initial product recovery phase is expected to take approximately three years, and during that period reductions in vapor risk would be minimal at best. Dissolved and adsorbed phase VOCs would not be addressed until at least three years after beginning treatment.

6.5.3. Implementability of Removal Technology

The following sections discuss the implementability of Alternative 5.

Technical Feasibility

Alternative 5 is a technically feasible approach to considerably reducing source (LNAPL) mass and decreasing dissolved phase VOC concentrations within the treatment area. The technologies are proven, and current site conditions indicate that biodegradation of chlorinated VOCs and petroleum hydrocarbons is occurring within the contaminant plume. Nitrate and sulfate have been depleted, ethene concentrations are increasing, and the plume is remaining relatively stable. Additionally, high Dehalococcoides microbial populations indicate that dehalogenation of chlorinated VOCs is already occurring at the site and could be greatly accelerated through the addition of hydrogen donors.

Alternative 5 is a phased approach, with each stage of treatment dependent on the success of the previous stages. Reductive dechlorination of chlorinated VOCs cannot begin until mobile LNAPL has been recovered. If mobile LNAPL remains following the product recovery phase, it may be spread to new areas or even daylight during high pressure injection of substrates. Sulfate biostimulation for petroleum hydrocarbon treatment cannot begin until reductive dechlorination has been completed.

Effective distribution of substrates in the subsurface is a limiting factor for all injection technologies. If groundwater cannot be extracted in sufficient quantities, municipal water will need to be procured.

Effectiveness of EISB is greatly dependent on the permeability of the subsurface. Heterogeneity, including zones of fine-grained sediment, can lead to channeling, preferential flow pathway formation, and uneven treatment.

Availability

Many vendors are available offering technology-specific materials, equipment and methods for LNAPL recovery and EISB implementation.

Administrative Feasibility

LNAPL recovery and EISB technologies are widely used at similar sites, minimizing regulatory and permit requirements.

Alternative 5 will greatly exceed the 12-month statutory limit for treatment.

6.5.4. Cost

The total cost for Alternative 5 is approximately $7,833,951.

A breakdown of costs is provided in Table 6-4. A detailed costing spreadsheet is presented in Appendix D.

6.6. ALTERNATIVE 6: FREE PRODUCT RECOVERY FOLLOWED BY AIR SPARGING AND SOIL VAPOR EXTRACTION

6.6.1. Description of Process/Technology

Alternative 6 – Free Product Recovery Followed by Air Sparging and Soil Vapor Extraction (AS/SVE) involves first recovering mobile LNAPL from the treatment area. After recovering mobile LNAPL, an AS/SVE system would be installed and operated. Air sparging involves injecting air into a contaminated aquifer. The injected air travels outward and upward from the air sparge well, stripping volatile contaminants as it travels through the subsurface. As the VOC-laden air rises upward into the vadose zone, it is captured and removed by a soil vapor extraction and treatment system.

For this alternative, free product recovery would be achieved in a manner similar to that described in Section 6.5.1 for the EISB alternative. Approximately 22 product recovery wells would be installed within the treatment area, and each would be fitted with a down-well product skimmer. (Figure 6-8) Recovered product would be piped to an above grade dual-walled product tank pending offsite disposal. After completing free phase product recovery, approximately 74 air sparge wells and 17 horizontal vapor extraction wells would be installed within the treatment area as shown in Figure 6-10. The air sparge wells located in the 45-foot deep portion of the treatment area would be constructed as dual-nested wells to ensure even treatment across the entire treatment depth.

Air would be supplied to the AS wells by a rotary screw compressor with associated receiver tank, filters, valves, manifolds, timers, and instrumentation. The soil vapor extraction wells would be attached to a vapor treatment system consisting of positive displacement blower, knockout tank, GEO C3 vapor treatment equipment, and granular activated carbon vessels. Water collected in the knockout tank would be temporarily stored on site in an above ground storage tank pending offsite disposal or discharge to the sanitary sewer. Sound insulation would be installed as needed to reduce noise generated by the treatment system.

Approximately eight additional groundwater monitoring wells would be installed at the site to monitor remediation progress.

Because of the shallow groundwater table, the ground surface would likely need to be sealed to prevent short circuiting of ambient air into the SVE system and prevent potential VOC emissions as a result of AS operations.

Alternative 6 is estimated to take approximately 7 years to complete; three years of mobile LNAPL recovery and 4 years of AS/SVE system operation. Pilot testing is recommended to determine LNAPL transmissivity and proper AS/SVE wells spacing.

A process flow diagram for the AS/SVE system is presented in Figure 6-11.

6.6.2. Effectiveness of Cleanup

The following sections discuss the effectiveness of Alternative 6.

Overall Protectiveness of Public Health and the Environment

Implementing Alternative 6 would likely remove the majority of the mobile LNAPL within the treatment area, greatly reducing vapor flux to surrounding properties and mass flux to groundwater. AS/SVE would selectively remove VOCs from residual LNAPL, effectively changing the LNAPL composition and further reducing vapor risks. AS/SVE would also remove considerable dissolved phase VOC mass from groundwater and vapor phase mass from the vadose zone.

The effectiveness of Alternative 6 would depend heavily on whether LNAPL is present and can be removed via recovery wells (i.e. whether LNAPL flows into recovery wells from the surrounding formation). Even if product recovery were successful overall, residual LNAPL would remain trapped within the pore spaces of fine-grained sediments. Due to the very thin vadose zone, engineering controls and monitoring would be required to ensure that LNAPL, contaminated groundwater or soil vapor are not emitted from the subsurface during sparging activities.

Ability to Achieve Removal Action Objectives

Alternative 6 would considerably reduce the VOC mass, but residual LNAPL that has been stripped of VOCs may remain at the groundwater interface and VOCs would remain trapped in areas with low

permeability. VOC concentrations remaining in soil and groundwater after treatment would likely exceed RAOs.

Long-Term Effectiveness and Permanence

The entire treatment area could be addressed by AS/SVE, including the portion under the warehouse building. Removing the majority of mobile LNAPL mass would reduce the potential for significant rebound post shutdown. Residual LNAPL that has been stripped of VOCs may remain on site, serving as a source for continued flux to groundwater and soil vapor. Subsurface heterogeneity may lead to the formation of preferential air flow pathways in both the saturated and unsaturated zones, resulting in uneven treatment. Adsorbed and dissolved phase VOCs trapped within low permeability zones would likely result in back-diffusion of VOCs into groundwater.

Air sparging would significantly raise dissolved oxygen levels in Site groundwater. Because reductive dechlorination only occurs under anaerobic conditions, this could potentially have a negative effect on the natural biological activity occurring along the downgradient margin of the treatment area.

Reduction of Toxicity, Mobility, or Volume through Treatment

Alternative 6 would reduce mobile LNAPL mass considerably and remove VOCs from soil, soil vapor, and groundwater. However, implementing this alternative would likely leave residual LNAPL that has been stripped of VOCs. The residual contamination may exceed soil and groundwater RAOs and continue to present a vapor risk to the community.

Short Term Effectiveness

Implementing the AS/SVE alternative would be minimally effective at mitigating health risks to the community in the short term. Approximately three years of mobile LNAPL recovery would be required prior to beginning AS/SVE, and health risks would be minimally reduced during this time, if at all.

Approximately 7 years of treatment would be required with this alternative; only the EISB alternative exceeds this timeframe.

6.6.3. Implementability of Removal Technology

The following sections discuss the implementability of Alternative 6.

Technical Feasibility

Free product recovery, air sparging, and soil vapor extraction are technically feasible treatment options that address LNAPL as well as dissolved phase, adsorbed phase, and vapor phase contamination. The technologies are proven, and generally effective. Monitoring and engineering controls would be necessary to ensure that LNAPL is not spread, VOCs are not emitted to the surface, and AS mounding does not impact SVE effectiveness.

The existing concrete cover would need to be cut or removed in its entirety to allow installation of the horizontal vapor extraction wells under the warehouse, and the surface would likely need to be sealed to prevent short-circuiting and optimize SVE effectiveness.

Effectiveness of AS/SVE (and all technologies that involve injecting or extracting vapors or liquids) is greatly dependent on the permeability of the subsurface. Heterogeneity, including zones of fine-grained sediment, can lead to channeling, preferential flow pathway formation, and uneven treatment.

Availability

Numerous vendors are available to supply product recovery and AS/SVE equipment. Only one vendor is available to supply the C3 vapor treatment system specified for the MPE, ISH, and AS/SVE alternatives due to community concerns over ex-situ thermal oxidation.

Administrative Feasibility

AS/SVE technology has been applied at numerous similar sites, minimizing regulatory and permit condition issues.

This alternative greatly exceeds the 12-month statute for treatment. Only the EISB alternative has a longer removal action timeframe.

6.6.4. Cost

The total cost for Alternative 6 is approximately $12,420,716.

A breakdown of costs is provided in Table 6-5. A detailed costing spreadsheet is presented in Appendix E.

.

7.0 COMPARATIVE ANALYSIS OF REMOVAL ACTION ALTERNATIVES

The following sections compare the removal action alternatives against the criteria identified above. The comparative analysis is summarized in Table 7-1.

7.1. EFFECTIVENESS

The following sections compare the effectiveness of the six removal action alternatives discussed in this EE/CA.

7.1.1. Overall Protectiveness of Public Health and the Environment

Alternative 4 – In-Situ Thermal Heating scores highest for overall protectiveness of Public Health and the Environment. ISH will effectively address free and residual LNAPL, along with dissolved phase, adsorbed phase, and vapor phase contamination, providing the most thorough removal of contamination within the treatment area and the most significant reduction in risk to public health and the environment.

Alternative 2 (excavation), Alternative 3 (MPE), and Alternative 6 (AS/SVE with product recovery) all fared equally with moderate scores. Each of these alternatives will leave source material in place, likely resulting in continued contaminant flux to groundwater and soil vapor, although AS/SVE will strip VOCs from the LNAPL. Excavation will leave source material (suspected LNAPL) under the warehouse building, and MPE and AS/SVE technologies will leave residual LNAPL. MPE would also likely leave dissolved phase contamination in the deeper saturated zones.

Alternative 5 (EISB with product recovery) received a score of poor to moderate for overall protectiveness of public health and the environment. This alternative will leave residual LNAPL in place and fails to treat the vadose zone, likely leading to continued soil vapor issues.

Alternative 1 – No Action scored the lowest of all six in terms of overall protectiveness of public health and the environment.

7.1.2. Ability to Achieve Removal Action Objectives

Alternative 4 – In-Situ Thermal Heating has the highest likelihood to achieve RAOs. ISH can address all depths of the entire treatment area, including the area under the warehouse building. ISH effectively removes LNAPL, along with vapor phase, dissolved phase, and adsorbed phase VOCs.

Alternative 6 (AS/SVE with product recovery) has the second highest likelihood of achieving RAOs. This alternative addresses all depths across the entire treatment area footprint, but leaves residual LNAPL stripped of VOCs at the groundwater interface and VOCs trapped in fine-grained sediments, potentially exceeding RAOs.

The third highest score for likelihood to achieve RAOs was given to Alternative 3 – Multi-Phase Extraction. Alternative 3 addresses the entire treatment area footprint, but leaves behind residual LNAPL at the groundwater interface, along with dissolved and adsorbed phase VOCs trapped in tight sediments and in the deep saturated zone. Alternative 3 is unlikely to achieve RAOs for deep groundwater or soil near the groundwater interface.

Alternative 2 (excavation) received the fourth highest score for ability to achieve removal action objectives. Considerable VOC-laden LNAPL would likely remain under the warehouse building, exceeding RAOs and contributing to further soil, soil vapor, and groundwater contamination.

Alternative 5 (EISB with product recovery) received the fifth highest score for ability to achieve RAOs. This alternative would leave residual LNAPL in the saturated zone, and fails to address VOCs in the vadose zone across the entire treatment area.

Alternative 1 – No Action is least likely to achieve RAOs of all alternatives considered.

7.1.3. Long-Term Effectiveness and Permanence

Alternative 4 – In-Situ Thermal Heating scores highest for long-term effectiveness and permanence. ISH effectively removes considerable mass from the vadose and saturated zones, including LNAPL. Because ISH is able to effectively strip VOCs from LNAPL, rebound is expected to be less significant than for other alternatives that leave residual LNAPL stripped of VOCs in place. The subsurface will retain considerable heat for up to one year after treatment is completed, potentially accelerating natural biodegradation of remaining VOCs by thermophilic bacteria.

Alternative 6 (AS/SVE) received a moderate to good score, and Alternative 2 (excavation) received a poor to moderate score for long-term effectiveness and permanence. Both of these technologies will leave behind contamination that could potentially lead to rebound after treatment is completed. Excavation will leave contamination (possibly LNAPL) under the warehouse building, likely resulting in contamination of the clean fill material after dewatering is ceased and the sheet piles are removed. Excavation must be conducted in tandem with LNAPL recovery, or LNAPL may be spread into the surrounding formation. AS/SVE will leave residual LNAPL in the saturated zone, although VOCs may have been selectively stripped from it.

Alternative 3 (MPE) scores slightly lower for long-term effectiveness and permanence than the AS/SVE option. Like AS/SVE, MPE will leave residual LNAPL in the saturated zone. MPE would also leave dissolved and adsorbed phase contamination in deeper groundwater areas that are not able to be dewatered.

Alternative 5 (EISB with product recovery) scores poor to moderate for long-term effectiveness and permanence. The EISB alternative will leave residual LNAPL in the saturated zone, and does not address VOCs in the vadose zone. Unlike alternatives involving airflow through the vadose zone (ISH, MPE, and AS/SVE), the EISB does not selectively remove VOCs from residual LNAPL. The residual LNAPL will continue to act as a source for groundwater and soil vapor contamination.

Alternative 1 – No Action scored lower than all other alternatives for long-term effectiveness and permanence.

7.1.4. Reduction of Toxicity, Mobility, or Volume through Treatment

Alternative 4 (ISH) scores higher than any other alternative for reduction of toxicity, mobility, or volume through treatment. ISH is the most effective means for removing VOCs and LNAPL from the vadose and saturated zones, and has a high probability of success based on site conditions and similar case histories. ISH is able to address the entire treatment area, including contamination present under the warehouse building.

The second highest score for reduction of toxicity, mobility, or volume through treatment was given to Alternative 6 (AS/SVE with product recovery). This alternative will remove considerable free phase, dissolved phase, and adsorbed phase VOC mass from the vadose and saturated zones. Residual LNAPL will likely remain following treatment, but VOCs may be selectively removed as air passes around and through the source material. Additional contamination may remain trapped in areas with fine-grained sediments or areas where subsurface heterogeneity leads to channeling and formation of preferential pathways.

Alternative 2 (excavation) received the third highest score with moderate to good reduction of toxicity, mobility, or volume through treatment. Excavation will remove nearly all impacted soil within the excavation footprint; however LNAPL will remain under the warehouse building and near subsurface utilities, and may be spread into the surrounding formation if LNAPL recovery is not performed in tandem with excavation. The VOCs remaining in adjacent soil and groundwater after excavation would likely contaminate the clean imported fill material as soon as dewatering ceased and the sheet piles were removed. There is also a possibility that dewatering may draw mobile LNAPL into deeper zones.

Both Alternative 3 (MPE) and Alternative 5 (EISB with product recovery) received moderate scores for reduction of toxicity, mobility, or volume through treatment. Both technologies will leave residual LNAPL at the groundwater interface. MPE fails to address contamination in deep saturated zones, and EISB fails to address vadose zone contamination. In either case, the remaining VOCs could serve as a source of VOC flux to soil and groundwater.

Alternative 1 – No Action received the lowest score with poor (zero) reduction of toxicity, mobility, or volume through treatment.

7.1.5. Short Term Effectiveness

Generally, Alternatives that involve applying a vacuum to the vadose zone at startup scored best for short-term effectiveness compared to alternatives that start with three years of mobile LNAPL recovery. Applying vacuum to the vadose zone results in immediate reductions in vapor risk, while removing mobile LNAPL has little effect on soil vapor in the short term.

Alternative 4 – In-Situ Thermal Heating scored highest for short-term effectiveness. Vapor risk be immediately reduced upon startup of the vapor extraction system, and considerable VOC mass is expected to be removed in just six months of treatment. ISH addresses free phase VOCs in the vadose zone and groundwater interface, as well as dissolved and adsorbed phase VOCs in the saturated zone within the shortest timeframe of any alternative other than excavation.

Alternative 3 (MPE) received the same score as Alternative 4 (ISH) for short-term effectiveness since both technologies employ vapor extraction at startup, effectively reducing vapor risk.

Both Alternative 5 (EISB with product recovery) and Alternative 6 (AS/SVE with product recovery) received moderate to poor scores for short-term effectiveness. Both alternatives require approximately three years of mobile LNAPL recovery prior to implementing the primary treatment technologies. During this initial three years, vapor risk will be reduced minimally, if at all.

Alternative 2 – Excavation received a poor score for short-term effectiveness. While the removal action timeframe is the shortest of any alternative, excavating highly contaminated soils adjacent to inhabited structures involves considerable risk to public health during implementation. The risks potentially posed by fugitive VOC emissions during excavation, transportation, and disposal of large quantities of highly contaminated soil outweigh the short-term benefits of the three-month removal action timeframe.

Alternative 1 – No Action received a poor score for short-term effectiveness.

7.2. IMPLEMENTABILITY

The following sections compare the implementability of the removal action alternatives discussed in this EE/CA. Alternative 1 (No Action) scored highest across all measures of implementability, but stands little chance of being selected. Therefore, the following sections focus on comparing Alternatives 2 through 6.

7.2.1. Technical Feasibility

Alternative 4 – In-Situ Thermal Heating scored highest for technical feasibility. ISH is a reliable and proven treatment technology that effectively treats vadose and saturated zone contamination. The technology is effective across a wide range of soil types and contamination levels, including LNAPL. ISH can effectively address the entire treatment area, including underneath the warehouse building and near subsurface utilities on the south side of the property. Implementing ISH will require additional security at the site due to heavy use of copper conductors (subject to theft) and safety concerns due to high voltage electrical lines.

Alternative 2 (excavation) and Alternative 6 (AS/SVE with product recovery) both received moderate to good scores for technical feasibility.

Excavation is a simple, reliable, and proven technology; however the proximity of nearby structures and subsurface utilities leads to significant geotechnical and engineering concerns. The shallow groundwater table adds to these concerns, necessitating the use of sheet piles and extensive dewatering to reach the desired treatment depths. If selected, the excavation alternative must be implemented during the dry season.

The shallow groundwater table and presence or LNAPL complicate the AS/SVE system design. Engineering controls would be required to minimize condensate generation, mounding, surfacing, and migration of LNAPL. Additional monitoring and engineering controls would be needed to optimize system operating parameters at each AS and SVE well depending on soil properties and vadose zone thickness.

Alternative 3 (MPE) and Alternative 5 (EISB with product recovery) both received moderate scores for technical feasibility.

MPE is a reliable method to reduce source mass and VOC flux to soil vapor and shallow groundwater. MPE systems must be run continuously to maintain hydraulic containment of dissolved phase VOCs and LNAPL in groundwater, and to maintain a depressed groundwater table. The technology is subject to fouling, fatigue, and other factors that can lead to down time and reduced treatment effectiveness. MPE is also subject to short-circuiting through preferential pathways in heterogeneous media (prior excavations, trenches, wells, etc.), and will leave residual LNAPL stripped of VOCs.

Site geochemical conditions indicate that reductive dechlorination is already occurring naturally in the subsurface, and could likely be accelerated through the addition of hydrogen donor compounds. However, Alternative 5 is subject to phased approach limitations; reductive dechlorination cannot begin until product recovery is completed, and sulfate addition will not begin until reductive dechlorination has been completed. Success of bioremediation is dependent upon having a source of water to mix with remediation reagents and inject into the subsurface. Ideally, the water would be pumped from the site in order to supply the water needed for bioremediation and provide hydraulic containment. If groundwater cannot be extracted from the subsurface in sufficient quantities, municipal water will need to be procured. The success of this alternative is also highly dependent on effective and even distribution of substrates. Subsurface heterogeneity may lead to uneven treatment.

7.2.2. Availability of Services and Materials

Alternative 5 – Free Product Recovery Followed by Enhanced In-Situ Bioremediation scored highest for availability of services and materials. The equipment required for product recovery and in-situ bioremediation is relatively simple and widely available. The remediation substrates (sodium lactate, emulsified vegetable oil, and sulfate) are available for immediate delivery from several vendors.

The second highest score for availability of services and materials was given to Alternative 2 – Excavation and Offsite Disposal. Many qualified excavation contractors are available in the area despite the specialized shoring and construction equipment that would be required due to site constraints.

Alternative 3 (MPE), Alternative 4 (ISH), and Alternative 6 (AS/SVE with product recovery) all received moderate scores for availability of services and materials. Due to community concerns about air emissions, all three of these alternatives will require a GEO C3 vapor treatment system. The GEO C3 vapor treatment system is proprietary and only available from one vendor in North America.

7.2.3. Administrative Feasibility

Alternative 4 – In-Situ Thermal Heating scored highest with moderate to good administrative feasibility. The short removal action timeframe fits within the 12-month statutory limit for cleanup, and the technology has been successfully implemented at several other sites in the area. Implementing ISH will require considerable infrastructure, requiring building and safety and public works permits.

The second highest score for administrative feasibility was given to Alternative 3 – Multi-Phase Extraction. MPE has been successfully implemented at several sites in the area, minimizing permit condition issues. The presence of 1,4-dioxane in groundwater may affect administrative feasibility. Advanced oxidation equipment will be required if 1,4-dioxane is not approved to be discharged to the POTW.

Both Alternative 5 (EISB with product recovery) and Alternative 6 (AS/SVE with product recovery) received moderate to poor scores for administrative feasibility. Both technologies have been successful at similar sites, but neither will come close to meeting the 12-month statutory limit for cleanup.

Alternative 2 – Excavation and Offsite Disposal received the lowest score for administrative feasibility. Despite being a widely accepted removal action technology, excavation has a high capital cost and would necessitate transporting large volumes of hazardous waste offsite. This could lead to long-term liability issues. A limited number of facilities are available to accept the hazardous waste that would be generated.

7.2.4. Cost

The costs for the removal action alternatives considered in this EE/CA rank as follows from least to most expensive:

1) Alternative 1 – No Action: $0
2) Alternative 5 – EISB: $7,833,951
3) Alternative 4 – ISH: $8,522,140
4) Alternative 3 – MPE: $11,249,080
5) Alternative 6 – AS/SVE: $12,420,716
6) Alternative 2 – Excavation: $28,957,017

Alternative 5 (EISB) and Alternative 4 (ISH) were estimated to have the lowest cost with the exception of the No Action alternative.

8.0 RECOMMENDED REMOVAL ACTION ALTERNATIVE

OTIE performed an EE/CA for the Site to determine the most feasible technology to remove the highest VOC concentrations at the Site under a NTCRA. All methodologies used were in accordance with the appropriate EPA guidance documents (USEPA, 1993). Relative ranking of the EE/CA removal action alternatives is presented in below:

Table 8-1. Ranking Summary

Ranking	Technology	Effectiveness	Implementability	Removal Action Timeframe	Cost*
1	Alternative 4 - ISH	Good to Excellent	Moderate to Good	6 - 9 Months	$8,522,140
2	Alternative 3 – MPE	Moderate	Moderate	5 Years	$11,249,080
3	Alternative 2 – Excavation and Offsite Disposal	Moderate	Poor to Moderate	3 - 6 Months	$28,957,017
4	Alternative 6 – AS/SVE	Moderate	Moderate	7 Years	$12,420,716
5	Alternative 5 – EISB	Poor to Moderate	Moderate to Good	11 Years	$7,833,951
6	Alternative 1 – No Action	Poor	N/A	N/A	$0

Notes:

1) Ranking based on qualitative assessment of all EE/CA guidance criteria; please refer to Tables 7-1 and 7-2 for details.

2) * = cost is a total of direct capital, indirect capital and post removal site control costs including Operation and Maintenance (O&M), performance monitoring and decommissioning costs.

3) Removal action timeframes include construction and projected O&M duration, not including post completion monitoring or decommissioning time.

Alternative 4 – In-Situ Thermal Heating is the recommended removal action alternative for the Site. ISH heats the soil and groundwater to volatilize contaminants which are then collected by vapor extraction wells and transferred to an above ground treatment system. The implementation of ISH will significantly reduce LNAPL, along with vapor phase, dissolved phase and adsorbed phase VOCs throughout the entire treatment area including the vadose zone and saturated zone. Site geology is amenable to ISH, and ISH can be implemented with minimal long-term impacts to the existing structures and subsurface utility infrastructure.

Implementing in-situ heating would result in immediate reductions in vapor risk as soon as the system is started, effectively addressing the community's concerns over vapor intrusion. The ISH alternative has the highest probability of achieving the removal action objectives within the 12-month statutory limit.

Reliable vendors are available to quickly mobilize and implement Alternative 4. ISH infrastructure and equipment could be installed within 3-4 months once design is finalized and approved, and it is estimated ISH would operate for approximately 6 months to achieve RAOs.

An additional benefit of ISH is that subsurface temperatures remain elevated for several months, and sometimes years, after the system is shutdown. During this slow cool down phase, the subsurface will be at an optimum temperature (30 – 45°C) for new microbial growth, greatly accelerating natural biodegradation of residual VOCs. Further stimulating the EISB processes via injection of an organic substrate and bio-augmentation after ISH shutdown would further accelerate the natural process of reductive de-chlorination and greatly increase the long-term effectiveness and permanence.

9.0 REFERENCES

California Department of Health Services (CDHS), 2005. *Public health Assessment for the AMCO Chemical Site* under a cooperative agreement with the Agency for Toxic Substances and Disease Registry (ATSDR).

California Department of Toxic Substances Control (DTSC), 2006. *Endangerment Determination and Remedial Action Order (Docket No I &/SE 94/95-002).*

California Environmental Protection Agency, DTSC, Human and Ecological Risk Division (HERD). 2005. *Recommended DTSC Default Exposure Factors for Use in Risk Assessment at California Military Facilities.* October.

California Regional Water Quality Control Board, San Francisco Region (RWQCB). 1999. *East Bay Plan Groundwater Basin Beneficial Use Evaluation Report*. Groundwater Committee. June.

California Regional Water Quality Control Board, San Francisco Region (RWQCB). 2004. *East Bay Plan Water Quality Control Plan (Basin Plan)*. November 17.

Camp, Dresser & McKee (CDM). 2000. *Removal Action Closure Report*, 349 Mandela Parkway, Oakland, California. February 23.

Ecology and Environment (E&E). 2001. *Preliminary Assessment/ Site Investigation Report*, *AMCO Chemical Site (aka DC Metals), Oakland, California*. August

Engineering-Science (ES). 1986. *Letter to AMCO Chemical on Site Investigation and Soil Sampling in Outside Yard Area.* April 8.

CH2M Hill. 2011. *Final Remedial Investigation Report AMCO Chemical Superfund Site.* January.

US Environmental Protection Agency (US EPA). 1989. Risk Assessment Guidance for Superfund: Volume I – Human Health Evaluation Manual (Part A), Interim Final, EPA/540/1-89/002, December 1989.

US EPA. 1991a. *Risk Assessment Guidance for Superfund, Human Health Evaluation Manual, Supplemental Guidance, "Standard Default Exposure Factors." Interim Final*. OSWER, Directive 9285.6-03. March 25.

US EPA. 1991b. *Risk Assessment Guidance for Superfund: Volume I Human Health Evaluation Manual. (Part B, Development of Risk-Based Preliminary Remediation Goal) Publication 9285.7-01B.* Office of Emergency and Remedial Response, Washington, DC. NTIS PB92-963333.

US EPA. 1993. *Guidance on Conducting Non-time-critical Removal Actions under CERCLA*. Office of Solid Waste and Emergency Response, EPA, Washington, DC. EPA 540-R-93-057.

US EPA. 1996. *Soil Screening Guidance: User's Guide.* Office of Solid Waste and Emergency Response, EPA, Washington, DC. Publication 9355.4-23. July 1996.

US Environmental Protection Agency (US EPA). 1997. *Ecological Risk Assessment Guidance for Superfund: Process for Designing and Conducting Ecological Risk Assessments. Interim Final*. Office of Solid Waste and Emergency Response.

US EPA. 1997. Ecological Risk Assessment Guidance for Superfund: Process for Designing and Conducting Ecological Risk Assessments. Interim Final. Office of Solid Waste and Emergency Response, EPA, Washington, DC. EPA 540-R-97-006.

US EPA. 1997. Exposure Factors Handbook. U.S. Environmental Protection Agency, Washington, DC, EPA/600/P-95/002F a-c, 1997.PA, Washington, DC. EPA 540-R-97-006.US Environmental Protection Agency (US EPA). 2004. In Situ Thermal Treatment of Chlorinated Solvents, Fundamentals and Field Applications. March.

US EPA and US Army Corps of Engineers. A Guide to Developing and Documenting Cost Estimates During the Feasibility Study. EPA 540-R-00-002/OSWER 9355.0-75. www.epa.gov/superfund. July 2000.

US EPA. 2004. Review of need for ecological risk assessment at AMCO Site. Memorandum from Ned Black, Regional Ecologist, to Brunilda Davila, Remedial Project Manager. 30 April.

US EPA. 2004b. Risk Assessment Guidance for Superfund (RAGS), Volume I: Human Health Evaluation Manual (Part E, Supplemental Guidance for Dermal Risk Assessment) Interim, EPA/540/R/99/005. July.

US EPA. 2004c. User's Guide and Background Technical Document for Preliminary Remediation Goals. Region 9. October 2004.

US EPA. 2009. Risk Assessment Guidance for Superfund Volume I: Human Health Evaluation Manual (Part F, Supplemental Guidance for Inhalation Risk Assessment). Final. EPA-540-R-070-002. OSWER 9285.7-82. January.

Rogers, J.D. and Figuers, SH. 1991. Engineering Geological Site Characterization of the Greater Oakland-Alameda Area, Alameda and San Francisco Counties, California [Report to the National Science Foundation] Rogers/Pacific Inc., Pleasant Hill, California. December 30.

Science Application International Corporation (SAIC). 2004. AMCO Chemical Company Superfund Site, Analysis of Invoices and Chemicals Handled. 1985-1991.

Subsurface Consultants, Inc. (SCI) and Todd Engineers, Inc. 1999. Hydrogeological Investigation; 50 Foot Oakland Harbor Navigation Improvement Project, Port of Oakland, California. August 13.

Tetra Tech, Inc. 1997. Baseline Risk Assessment, Proposed Third Street Park, Oakland. February.

FIGURES

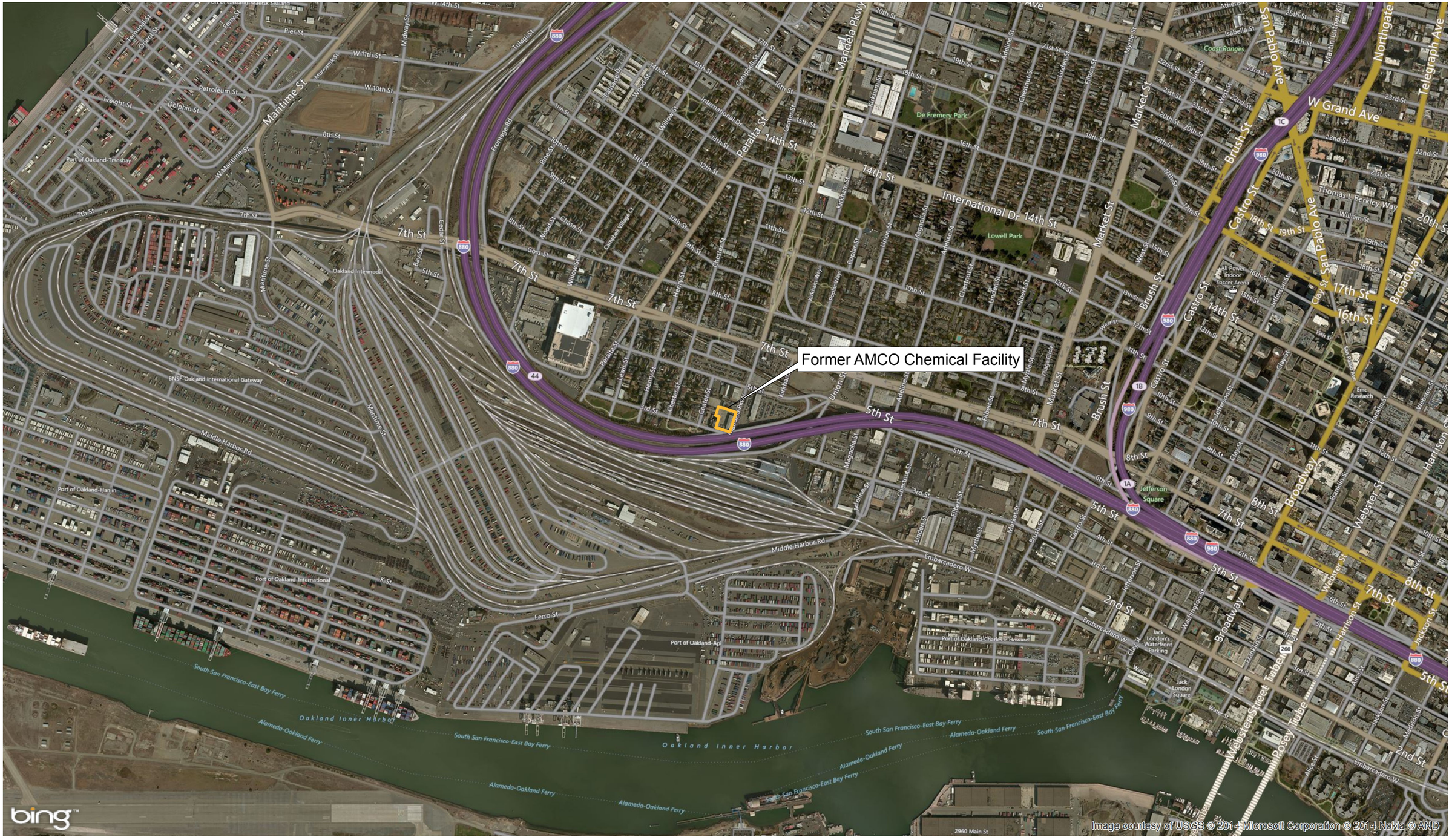

OTIE
Oneida Total Integrated Enterprises

USEPA, Region 9
AMCO Chemical Superfund Site
Oakland, California

FIGURE 2-1
Site Location Map

G:\GIS_Workspace\AMCO\November 2014\Figure 2-1 - Site Location Map.mxd 1/7/2015 [10:08 AM] WITMIC

(Source Reference: ITSI Gilbane, 2013)

OTIE Oneida Total Integrated Enterprises

USEPA, Region 9
AMCO Chemical Superfund Site
Oakland, California

FIGURE 2-2
Soil Characterization Sampling Grid and Concrete Thickness
Former AMCO Facility
and Warehouse Building

G:\GIS_Workspace\AMCO\November 2014\Figure 2-2 - Soil Characterization Sampling Grid.mxd 1/8/2015 [10:31 AM] WITMIC

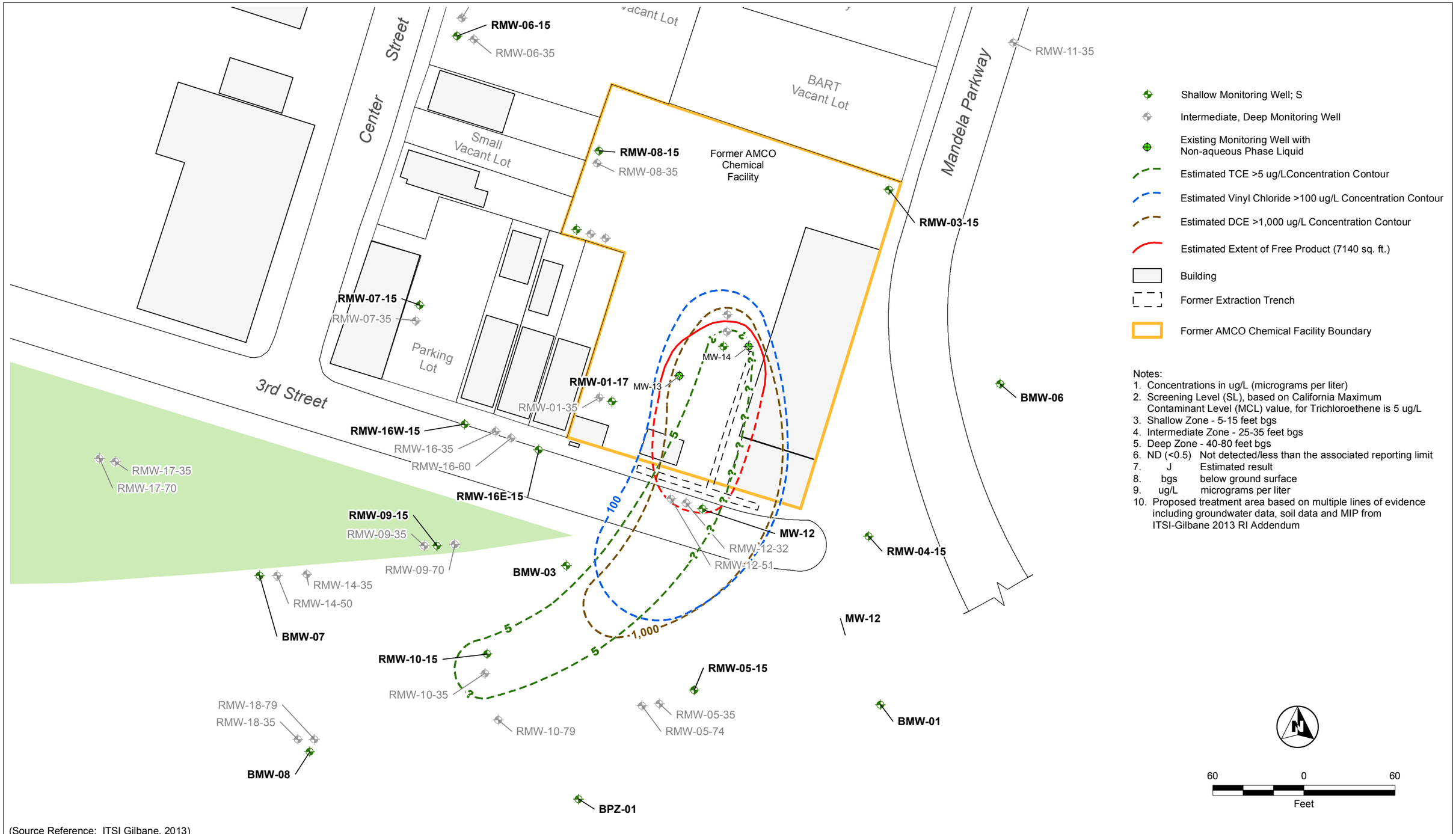

Notes:
1. Concentrations in ug/L (micrograms per liter)
2. Screening Level (SL), based on California Maximum Contaminant Level (MCL) value, for Trichloroethene is 5 ug/L
3. Shallow Zone - 5-15 feet bgs
4. Intermediate Zone - 25-35 feet bgs
5. Deep Zone - 40-80 feet bgs
6. ND (<0.5) Not detected/less than the associated reporting limit
7. J Estimated result
8. bgs below ground surface
9. ug/L micrograms per liter
10. Proposed treatment area based on multiple lines of evidence including groundwater data, soil data and MIP from ITSI-Gilbane 2013 RI Addendum

(Source Reference: ITSI Gilbane, 2013)

OTIE Oneida Total Integrated Enterprises

USEPA, Region 9
AMCO Chemical Superfund Site
Oakland, California

FIGURE 2-3
Combined Plume Map
Shallow Groundwater
August 2012

G:\GIS_Workspace\AMCO\AMCO\Figure 2-3 - Combined Plume Map.mxd 1/7/2015 [09:30 AM] WITMIC, ITSI

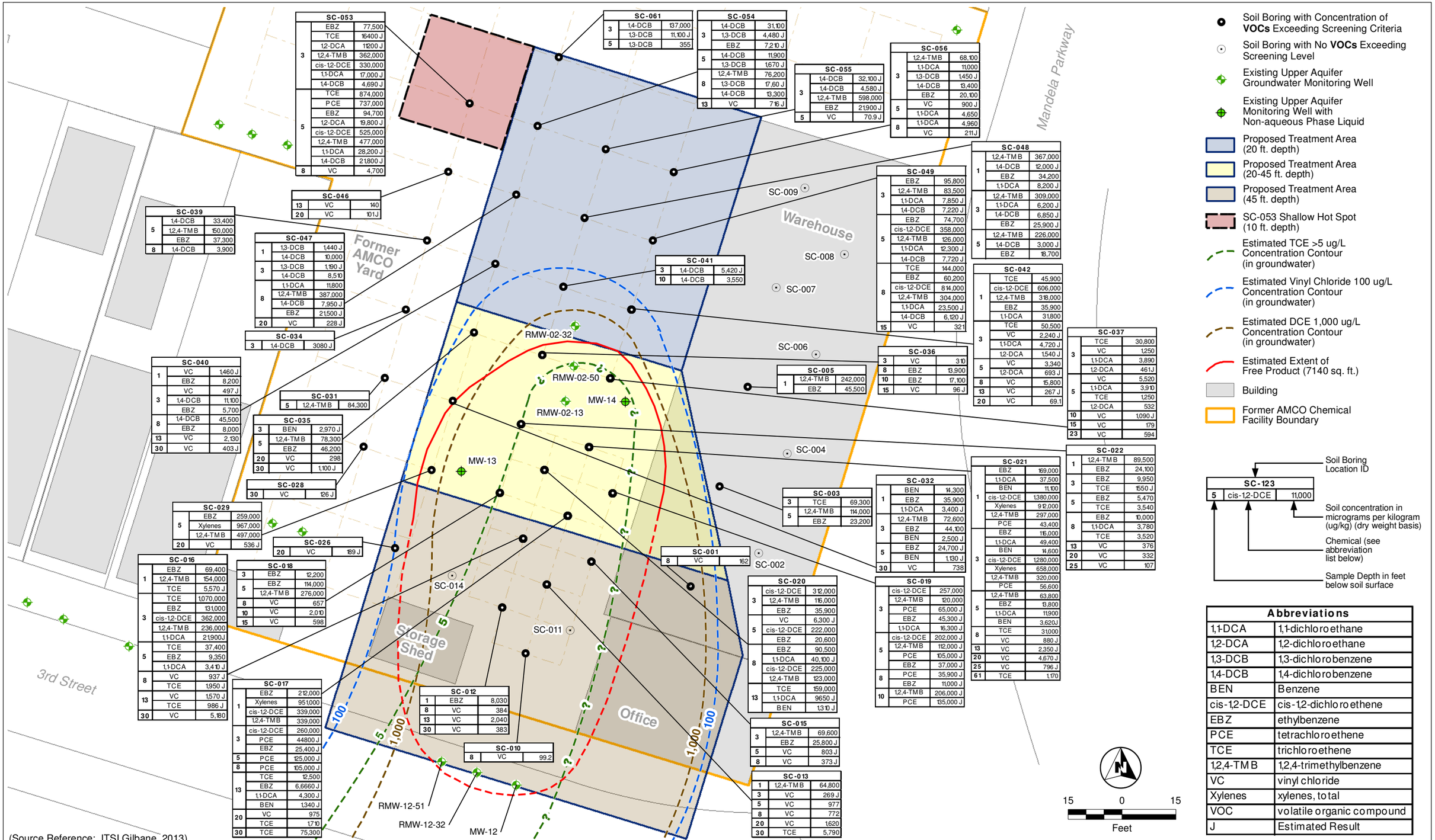

SC-053		
3	EBZ	77,500
	TCE	16400 J
	1,2-DCA	11200 J
	1,2,4-TMB	362,000
	cis-1,2-DCE	330,000
	1,1-DCA	17,000 J
	1,4-DCB	4,690 J
5	TCE	874,000
	PCE	737,000
	EBZ	94,700
	1,2-DCA	19,800 J
	cis-1,2-DCE	525,000
	1,2,4-TMB	477,000
	1,1-DCA	28,200 J
	1,4-DCB	21,800 J
8	VC	4,700

SC-061		
3	1,4-DCB	137,000
	1,3-DCB	11,100 J
5	1,3-DCB	355

SC-054		
3	1,4-DCB	31,100
	1,3-DCB	4,480 J
	EBZ	7,210 J
5	1,4-DCB	11,900
	1,3-DCB	1,670 J
8	1,2,4-TMB	76,200
	1,3-DCB	17,60 J
	1,4-DCB	13,300
13	VC	716 J

SC-055		
3	1,4-DCB	32,100 J
	1,4-DCB	4,580 J
	1,2,4-TMB	598,000
	EBZ	21,900 J
5	VC	70.9 J

SC-056		
3	1,2,4-TMB	68,100
	1,1-DCA	11,000
	1,3-DCB	1,450 J
	1,4-DCB	13,400
	EBZ	20,100
5	VC	900 J
	1,1-DCA	4,650
8	1,1-DCA	4,960
	VC	211J

SC-046		
13	VC	140
20	VC	101J

SC-039		
5	1,4-DCB	33,400
	1,2,4-TMB	150,000
	EBZ	37,300
8	1,4-DCB	3,900

SC-047		
1	1,3-DCB	1,440 J
	1,4-DCB	10,000
3	1,3-DCB	1,190 J
	1,4-DCB	8,510
8	1,1-DCA	11,800
	1,2,4-TMB	387,000
	1,4-DCB	7,950 J
	EBZ	21,500 J
20	VC	228 J

SC-034		
3	1,4-DCB	3080 J

SC-041		
3	1,4-DCB	5,420 J
10	1,4-DCB	3,550

SC-049		
3	EBZ	95,800
	1,2,4-TMB	83,500
	1,1-DCA	7,850 J
	1,4-DCB	7,220 J
5	EBZ	74,700
	cis-1,2-DCE	358,000
	1,2,4-TMB	126,000
	1,1-DCA	12,300 J
	1,4-DCB	7,720 J
8	TCE	144,000
	EBZ	60,200
	cis-1,2-DCE	814,000
	1,2,4-TMB	304,000
	1,1-DCA	23,500 J
	1,4-DCB	6,120 J
15	VC	321

SC-048		
1	1,2,4-TMB	367,000
	1,4-DCB	12,000 J
	EBZ	34,200
	1,1-DCA	8,200 J
3	1,2,4-TMB	309,000
	1,1-DCA	6,200 J
	1,4-DCB	6,850 J
	EBZ	25,900 J
5	1,2,4-TMB	226,000
	1,4-DCB	3,000 J
	EBZ	18,700

SC-042		
1	TCE	45,900
	cis-1,2-DCE	606,000
	1,2,4-TMB	318,000
	EBZ	35,900
	1,1-DCA	31,800
3	TCE	50,500
	VC	2,240 J
	1,1-DCA	4,720 J
	1,2-DCA	1,540 J
5	VC	3,340
	1,2-DCA	693 J
8	VC	15,800
13	VC	267 J
20	VC	69.1

SC-040		
1	VC	1,460 J
	EBZ	8,200
3	VC	497 J
	1,4-DCB	11,100
	EBZ	5,700
8	1,4-DCB	45,500
	EBZ	8,000
13	VC	2,130
30	VC	403 J

SC-031		
5	1,2,4-TMB	84,300

SC-035		
3	BEN	2,970 J
5	1,2,4-TMB	78,300
	EBZ	46,200
20	VC	298
30	VC	1,100 J

SC-028		
30	VC	126 J

SC-036		
3	VC	310
8	EBZ	13,900
10	EBZ	17,100
15	VC	96 J

SC-005		
1	1,2,4-TMB	242,000
	EBZ	45,500

SC-037		
3	TCE	30,800
	VC	1,250
	1,1-DCA	3,890
	1,2-DCA	461J
5	VC	5,520
	1,1-DCA	3,910
	TCE	1,250
	1,2-DCA	532
10	VC	1,090 J
15	VC	179
23	VC	594

SC-022		
1	1,2,4-TMB	89,500
	EBZ	24,100
3	EBZ	9,950
	TCE	1550 J
5	EBZ	5,470
	TCE	3,540
8	EBZ	10,000
	1,1-DCA	3,780
	TCE	3,520
13	VC	376
20	VC	332
25	VC	107

SC-021		
1	EBZ	169,000
	1,1-DCA	37,500
	BEN	11,100
	cis-1,2-DCE	1,380,000
	Xylenes	912,000
	1,2,4-TMB	297,000
3	PCE	43,400
	EBZ	116,000
	1,1-DCA	49,400
	BEN	14,600
	cis-1,2-DCE	1,280,000
	Xylenes	658,000
	1,2,4-TMB	320,000
	PCE	56,600
5	1,2,4-TMB	63,800
	EBZ	13,800
	1,1-DCA	11,900
	BEN	3,620J
8	TCE	31,000
	VC	880 J
13	VC	2,350 J
20	VC	4,670 J
25	VC	796 J
61	TCE	1,170

SC-032		
1	BEN	14,300
	EBZ	35,900
	1,1-DCA	3,400 J
3	1,2,4-TMB	72,600
	EBZ	44,100
	BEN	2,500 J
5	EBZ	24,700 J
	BEN	1,130 J
30	VC	738

SC-003		
3	TCE	69,300
5	1,2,4-TMB	114,000
	EBZ	23,200

SC-029		
5	EBZ	259,000
	Xylenes	967,000
	1,2,4-TMB	497,000
20	VC	536 J

SC-026		
20	VC	189 J

SC-001		
8	VC	162

SC-019		
3	cis-1,2-DCE	257,000
	1,2,4-TMB	120,000
	PCE	65,000 J
	EBZ	45,300 J
	1,1-DCA	16,300 J
5	cis-1,2-DCE	202,000 J
	1,2,4-TMB	112,000 J
	PCE	105,000 J
	EBZ	37,000 J
8	PCE	35,900 J
	EBZ	11,000 J
10	1,2,4-TMB	206,000 J
	PCE	135,000 J

SC-020		
3	cis-1,2-DCE	312,000
	1,2,4-TMB	116,000
	EBZ	35,900
5	VC	6,300 J
	cis-1,2-DCE	222,000
	EBZ	20,600
8	EBZ	90,500
	1,1-DCA	40,100 J
	cis-1,2-DCE	225,000
	1,2,4-TMB	123,000
13	TCE	159,000
	1,1-DCA	9650 J
	BEN	1,310 J

SC-016		
1	EBZ	69,400
	1,2,4-TMB	154,000
	TCE	5,570 J
3	TCE	1,070,000
	EBZ	131,000
	cis-1,2-DCE	362,000
	1,2,4-TMB	236,000
	1,1-DCA	21,900J
5	TCE	37,400
	EBZ	9,350
	1,1-DCA	3,410 J
8	VC	937 J
	TCE	1,950 J
13	VC	1,570 J
	TCE	986 J
30	VC	5,180

SC-018		
3	EBZ	12,200
5	EBZ	114,000
	1,2,4-TMB	276,000
8	VC	657
10	VC	2,010
15	VC	598

SC-012		
1	EBZ	8,030
8	VC	384
13	VC	2,040
30	VC	383

SC-010		
8	VC	99.2

SC-017		
1	EBZ	212,000
	Xylenes	951,000
	cis-1,2-DCE	339,000
	1,2,4-TMB	339,000
3	cis-1,2-DCE	260,000
	PCE	44800 J
	EBZ	25,400 J
5	PCE	125,000 J
8	PCE	105,000 J
13	TCE	12,500
	EBZ	6,6660 J
	1,1-DCA	4,300 J
	BEN	1,340 J
20	VC	975
	TCE	1,710
30	TCE	75,300

SC-015		
3	1,2,4-TMB	69,600
	EBZ	25,800 J
5	VC	803 J
8	VC	373 J

SC-013		
1	1,2,4-TMB	64,800
3	VC	269 J
5	VC	977
8	VC	772
20	VC	1,620
30	TCE	5,790

Abbreviations	
1,1-DCA	1,1-dichloroethane
1,2-DCA	1,2-dichloroethane
1,3-DCB	1,3-dichlorobenzene
1,4-DCB	1,4-dichlorobenzene
BEN	Benzene
cis-1,2-DCE	cis-1,2-dichloroethene
EBZ	ethylbenzene
PCE	tetrachloroethene
TCE	trichloroethene
1,2,4-TMB	1,2,4-trimethylbenzene
VC	vinyl chloride
Xylenes	xylenes, total
VOC	volatile organic compound
J	Estimated Result

OTIE
Oneida Total Integrated Enterprises

USEPA, Region 9
AMCO Chemical Superfund Site
Oakland, California

FIGURE 2-4
Soil Sampling Results and Combined Plume Map January 2014
Source Area (Former AMCO Facility)
December 2011 - January 2012

G:\GIS_Workspace\AMCO\November 2014\Figure 2-4 - Soil Sampling Results and Combined Plume Map January 2014.mxd 2/6/2015 [16:01 PM] WITMIC

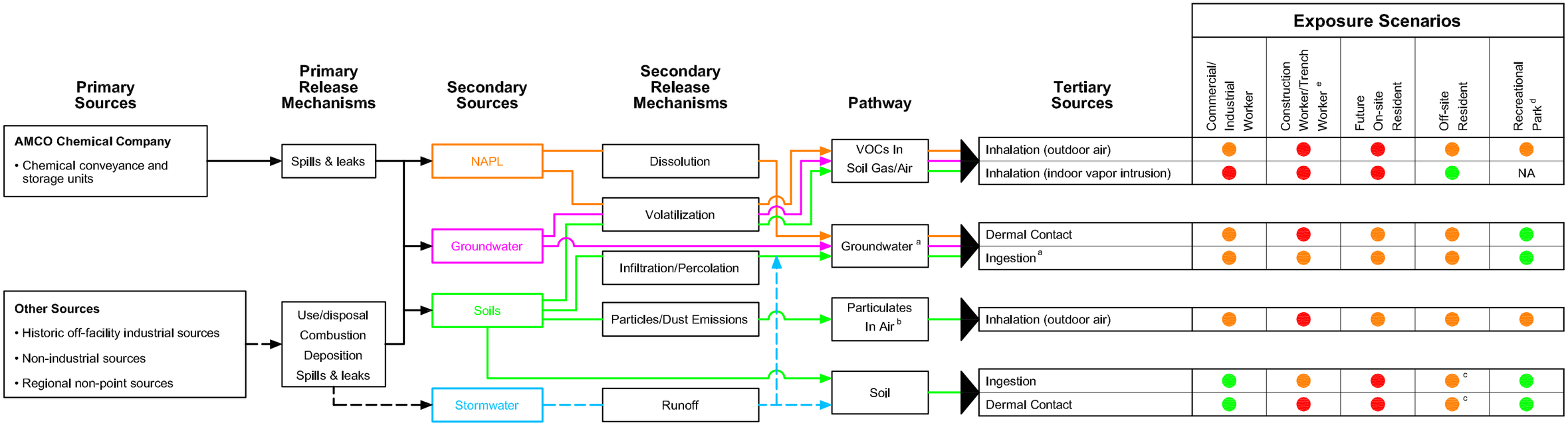

LEGEND:

- = Complete pathway
- = Potentially complete pathway but not an existing pathway and/or not considered a significant source of risk
- = Incomplete pathway
- NA = Not Applicable
- NAPL = Non-aqueous Phase Liquid
- VOC = Volatile Organic Compound
- = Direct Source
- = Indirect Source

NOTES:

a Groundwater is designated for municipal and domestic supply beneficial use by default; however, there are no domestic water wells within 1 mile of the site, and there are no municipal water wells within 4 miles of the site.

b Only during future construction activities.

c Exposure to contaminants in the residential soil. The pathway is currently incomplete for exposure to on-site soil.

d South Prescott Park

e Intrusive work (excavation, foundation, yard)

OTIE Oneida Total Integrated Enterprises

USEPA, Region 9
AMCO Chemical Superfund Site
Oakland, California

FIGURE 3-1
Exposure Based Conceptual Site Model

G:\GIS_Workspace\AMCO\November 2014\Figure 3-1 - Conceptual Site Exposure Model.dwg

Notes:
1. Concentrations in ug/L (micrograms per liter)
2. Screening Level (SL), based on California Maximum Contaminant Level (MCL) value, for Trichloroethene is 5 ug/L
3. Shallow Zone - 5-15 feet bgs
4. Intermediate Zone - 25-35 feet bgs
5. Deep Zone - 40-80 feet bgs
6. ND (<0.5) Not detected/less than the associated reporting limit
7. J Estimated result
8. bgs below ground surface
9. ug/L micrograms per liter
10. Proposed treatment area based on multiple lines of evidence including groundwater data, soil data and MIP from ITSI-Gilbane 2013 RI Addendum
11. Soil concentration exceedance of removal action objective at SL-005 1 ft below ground surface will be addressed during remedial design phase.

(Source Reference: ITSI Gilbane, 2013)

OTIE Oneida Total Integrated Enterprises

USEPA, Region 9
AMCO Chemical Superfund Site
Oakland, California

FIGURE 5-1
Proposed Treatment Area

G:\GIS_Workspace\AMCO\November 2014\Figure 5-1 - Proposed Treatment Area.mxd 1/7/2015 [10:06 AM] WITMIC

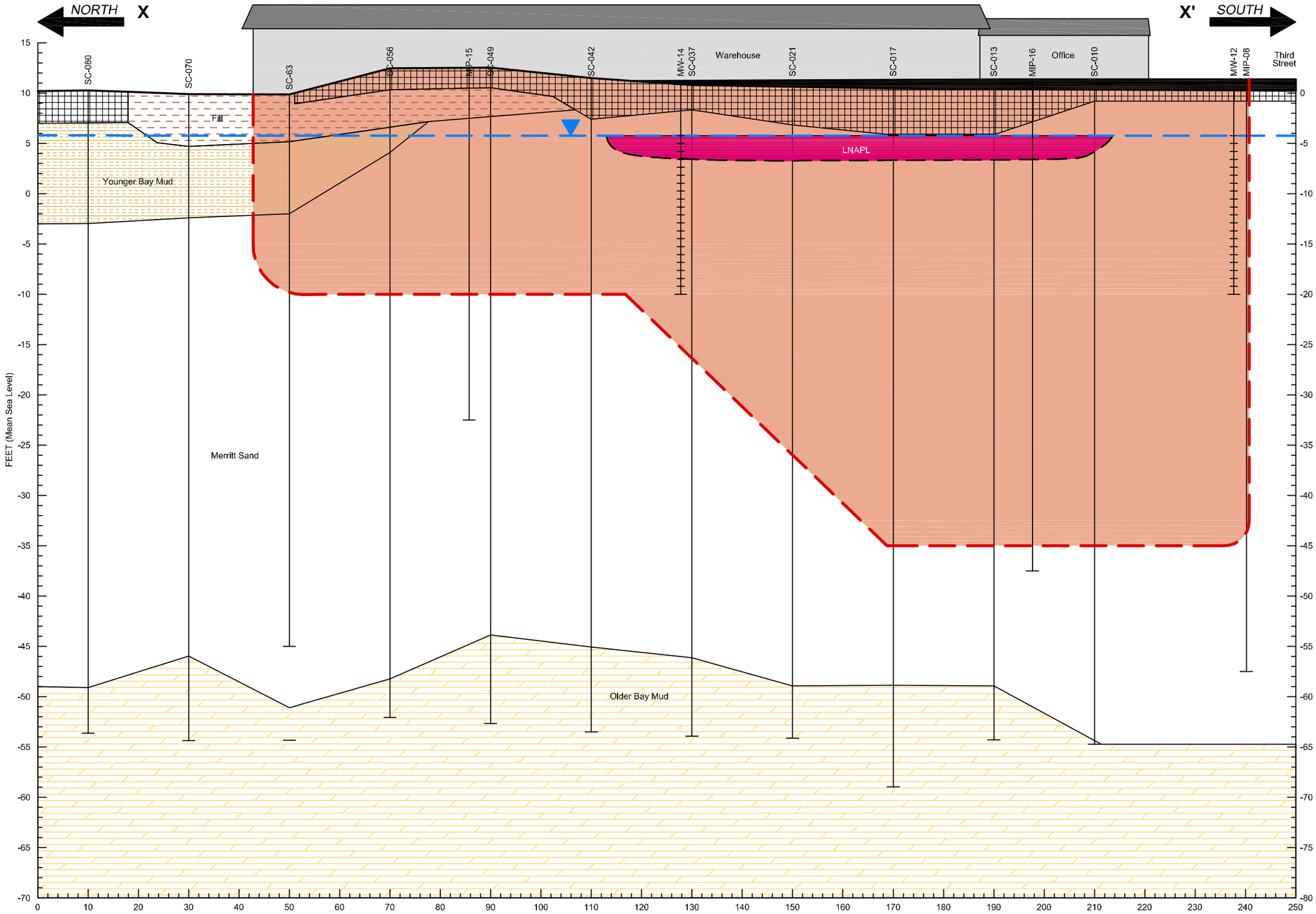

LEGEND

- Concrete Pavement (thickness varies)
- Gravelly sand, silty sand, debris (Fill)
- Merritt Sand
- Silts, silty sand, clayey sand, organic soils (Younger Bay Mud)
- Stiff clay with sand lenses (Older Bay Mud)
- LNAPL
- Extent of Treatment Area
- Groundwater level projected from groundwater elevation in February 2012 at monitoring well RMW-02-13

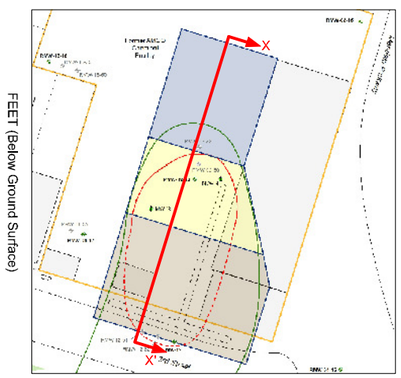

NOTES

Vertical and lateral delineation of treatment zone based on:

1) Final Remedial Investigation Report Addendum (ITSI, 2014), Figures 5-22 through 5-25

2) Appendix I of ITSI, 2014, Figure 6

Cross Section and Geology sourced from ITSI-Gilbane, 2014 Figure 4-1

SC-63 = 2012 Soil Boring completed by Gilbane
MIP-08 = 2010/2011 Membrane Interface Probe Boring by Gilbane
MW-12 = Shallow Zone Monitoring Well

LNAPL = Light Non-Aqueus Phase Liquid
LNAPL shown for conceptual illustration only, actual thicknessss and distribution in formation is unknown

0 20' 40'
HORIZONTAL SCALE IN FEET

0 10' 20'
VERTICAL SCALE IN FEET

OTIE
Oneida Total Integrated Enterprises

USEPA, Region 9
AMCO Chemical Superfund Site
Oakland, California

FIGURE 5-2
Conceptual Site Model with Treatment Depths

G:\GIS_Workspace\AMCO\November 2014\Figure 5-2 - Conceptual Site Model.dwg

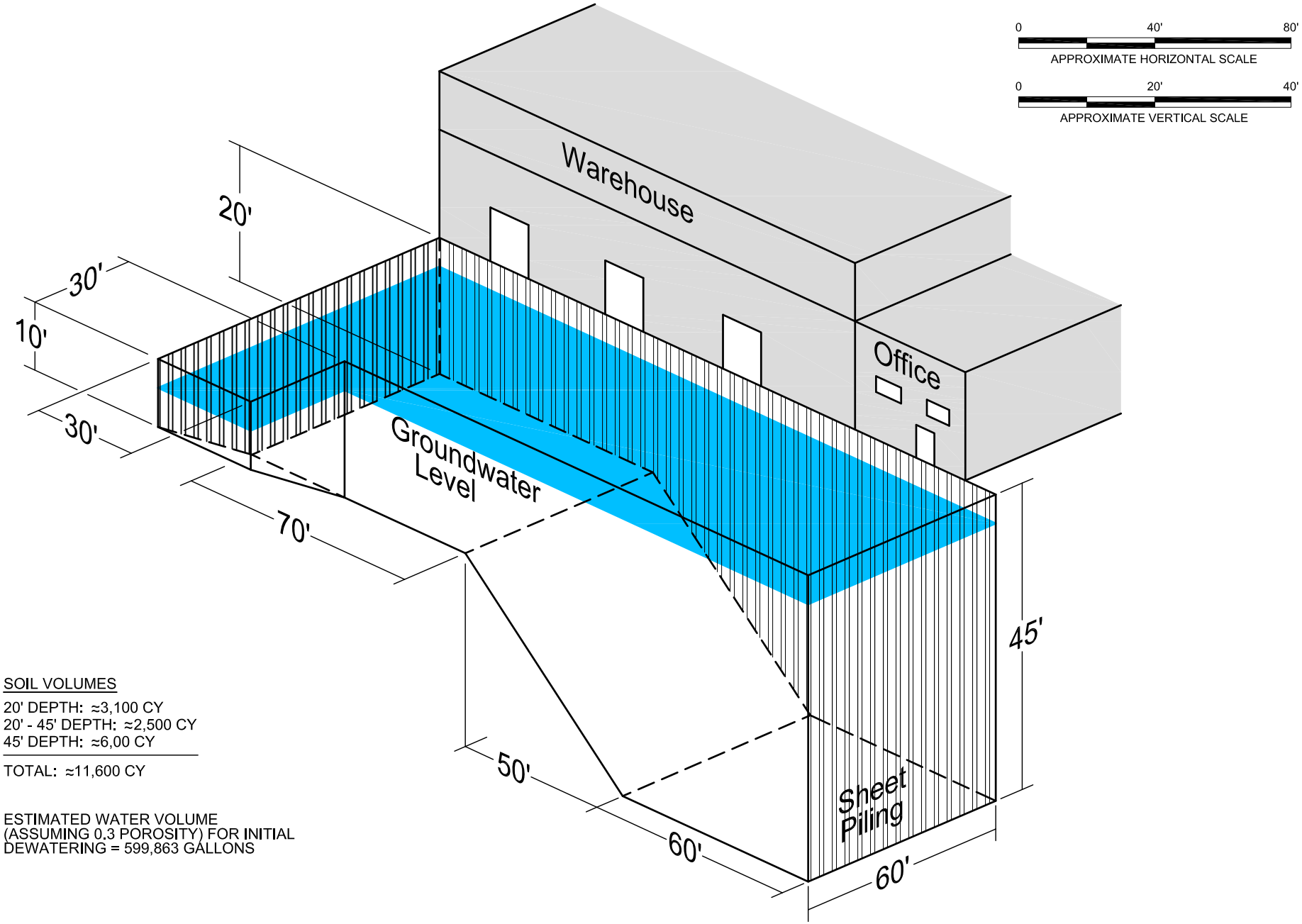

SOIL VOLUMES

20' DEPTH: ≈3,100 CY
20' - 45' DEPTH: ≈2,500 CY
45' DEPTH: ≈6,00 CY

TOTAL: ≈11,600 CY

ESTIMATED WATER VOLUME
(ASSUMING 0.3 POROSITY) FOR INITIAL
DEWATERING = 599,863 GALLONS

OTIE
Oneida Total Integrated Enterprises

USEPA, Region 9
AMCO Chemical Superfund Site
Oakland, California

FIGURE 6-1
Conceptual Excavation

G:\GIS_Workspace\AMCO\November 2014\Figure 6-1 - Conceptual Excavation.dwg

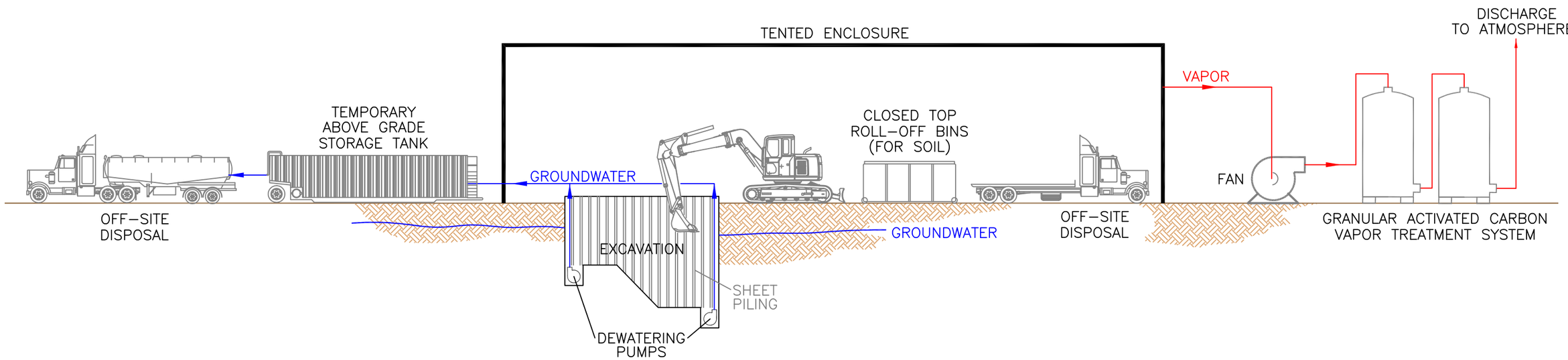

Figure 6-2
Excavation Process Flow Diagram

AMCO Chemical Superfund Site
1414 3rd Street, Oakland, California

OTIE
Oneida Total Integrated Enterprises

Date: January 7, 2015

File: AMCO-D&H CSM.dwg

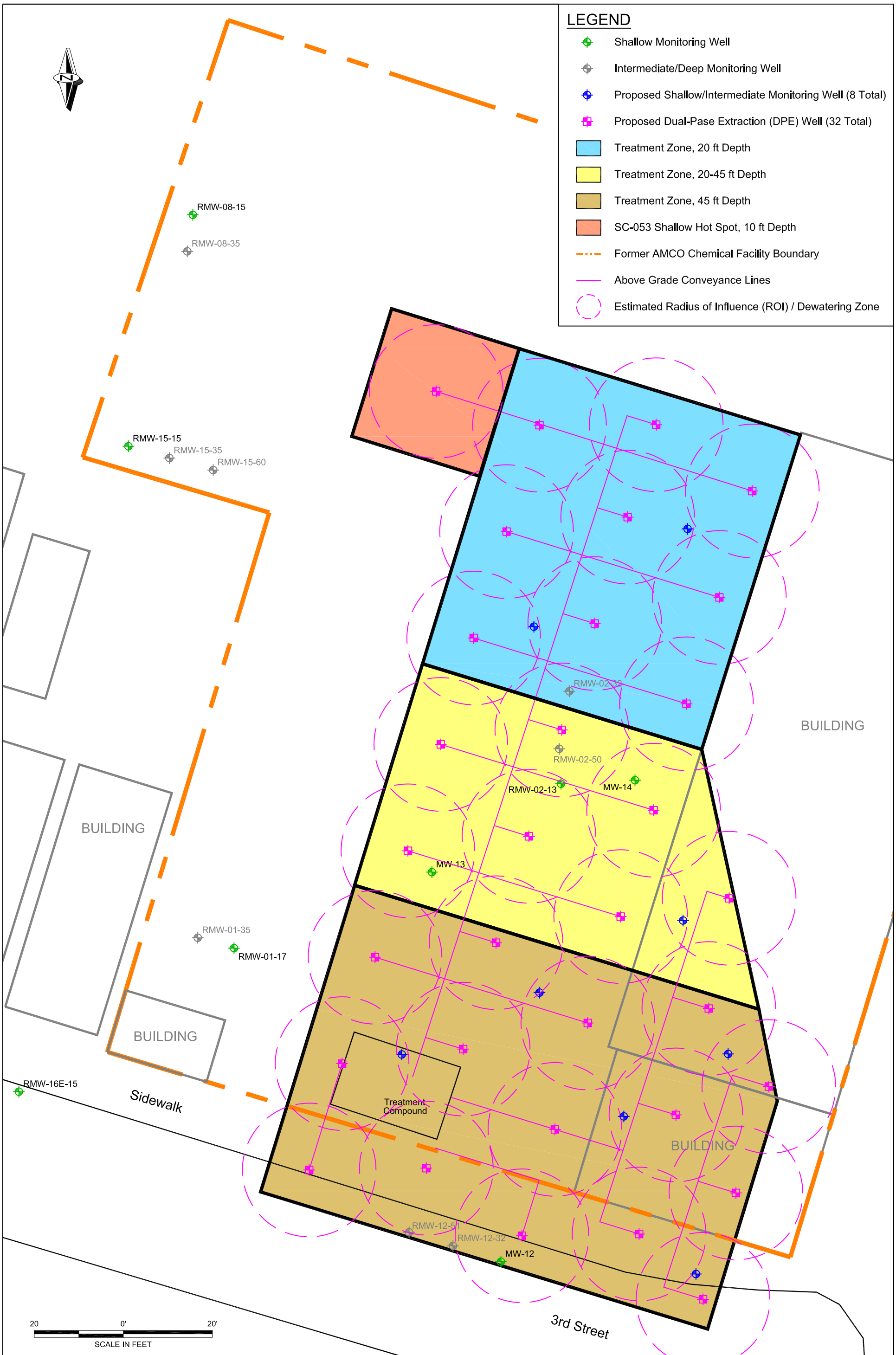

OTIE
Oneida Total Integrated Enterprises

USEPA, Region 9
AMCO Chemical Superfund Site
Oakland, California

FIGURE 6-3
Multi-Phase Extraction System Plan

AMCO-Proposed.dwg

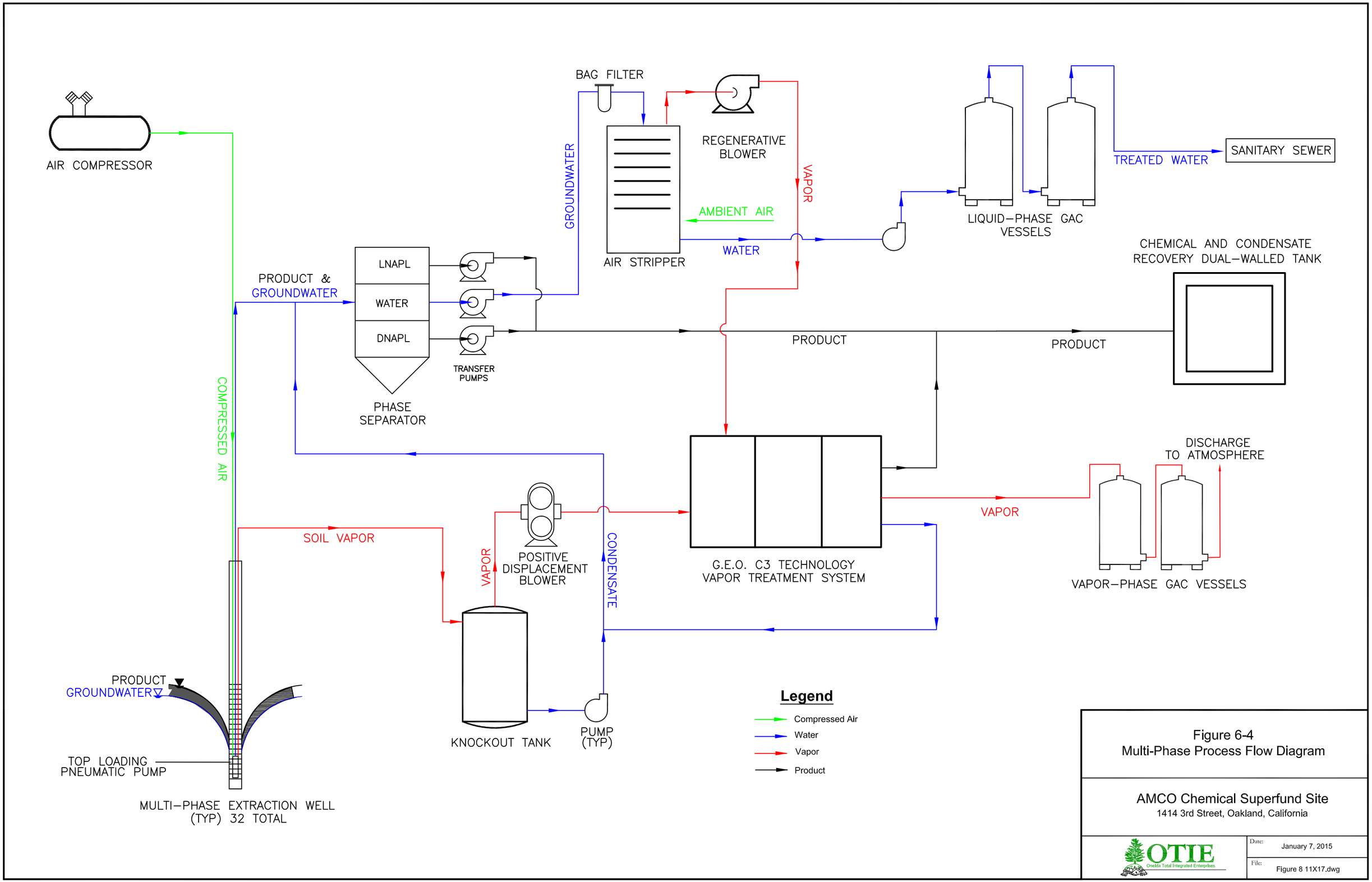
AIR COMPRESSOR
COMPRESSED AIR
BAG FILTER
GROUNDWATER
REGENERATIVE BLOWER
VAPOR
AMBIENT AIR
AIR STRIPPER
WATER
LIQUID–PHASE GAC VESSELS
TREATED WATER
SANITARY SEWER
CHEMICAL AND CONDENSATE RECOVERY DUAL–WALLED TANK
PRODUCT & GROUNDWATER
LNAPL
WATER
DNAPL
TRANSFER PUMPS
PHASE SEPARATOR
PRODUCT
PRODUCT
DISCHARGE TO ATMOSPHERE
VAPOR
SOIL VAPOR
VAPOR
POSITIVE DISPLACEMENT BLOWER
CONDENSATE
G.E.O. C3 TECHNOLOGY VAPOR TREATMENT SYSTEM
VAPOR–PHASE GAC VESSELS
PRODUCT
GROUNDWATER
TOP LOADING PNEUMATIC PUMP
MULTI–PHASE EXTRACTION WELL (TYP) 32 TOTAL
KNOCKOUT TANK
PUMP (TYP)
Legend
Compressed Air
Water
Vapor
Product
Figure 6-4
Multi-Phase Process Flow Diagram
AMCO Chemical Superfund Site
1414 3rd Street, Oakland, California
OTIE
Oneida Total Integrated Enterprises
Date: January 7, 2015
File: Figure 8 11X17.dwg

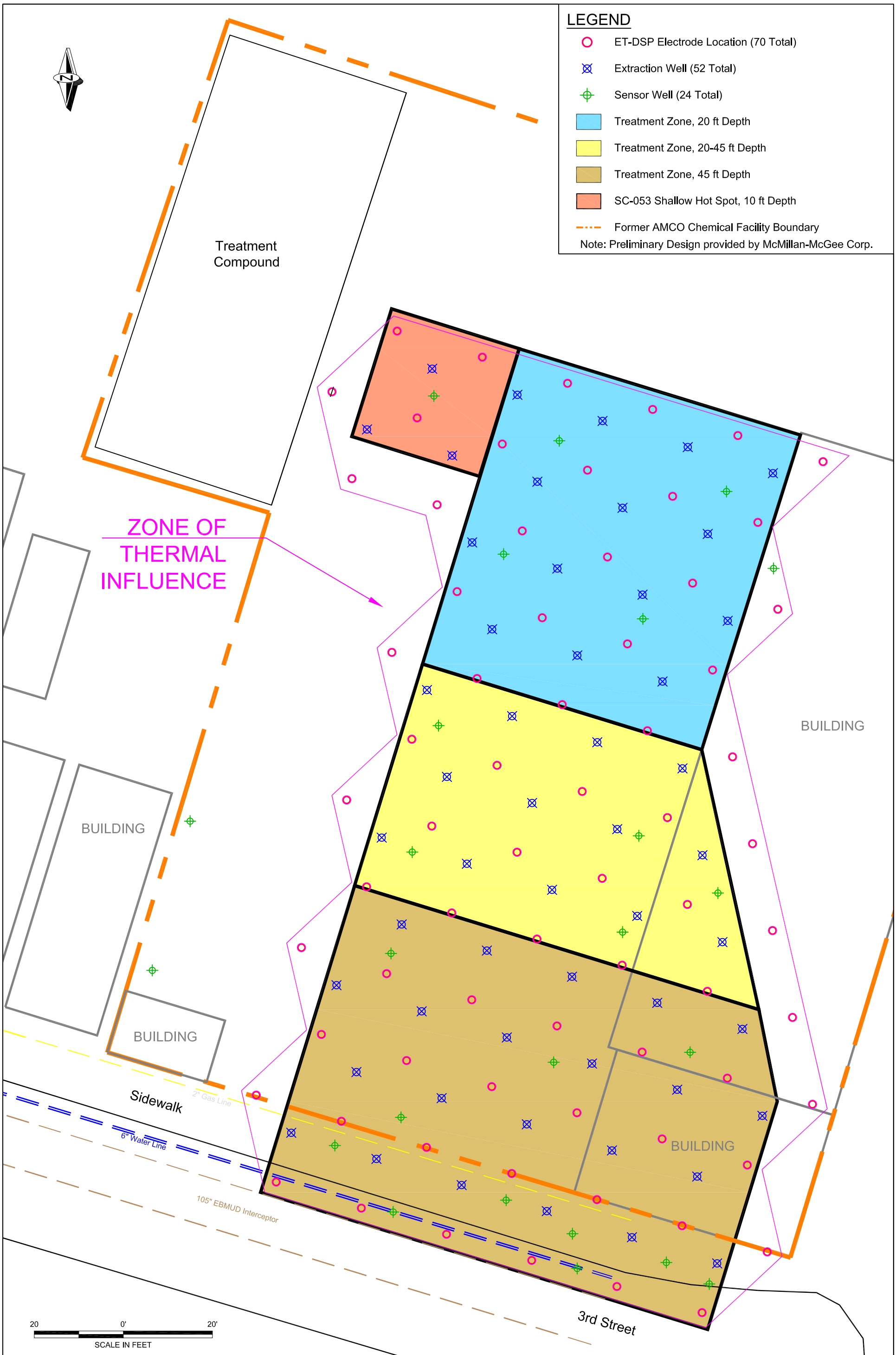

OTIE
Oneida Total Integrated Enterprises

USEPA, Region 9
AMCO Chemical Superfund Site
Oakland, California

FIGURE 6-5
In-Situ Heating System Layout

AMCO-ERH-Mc2.dwg

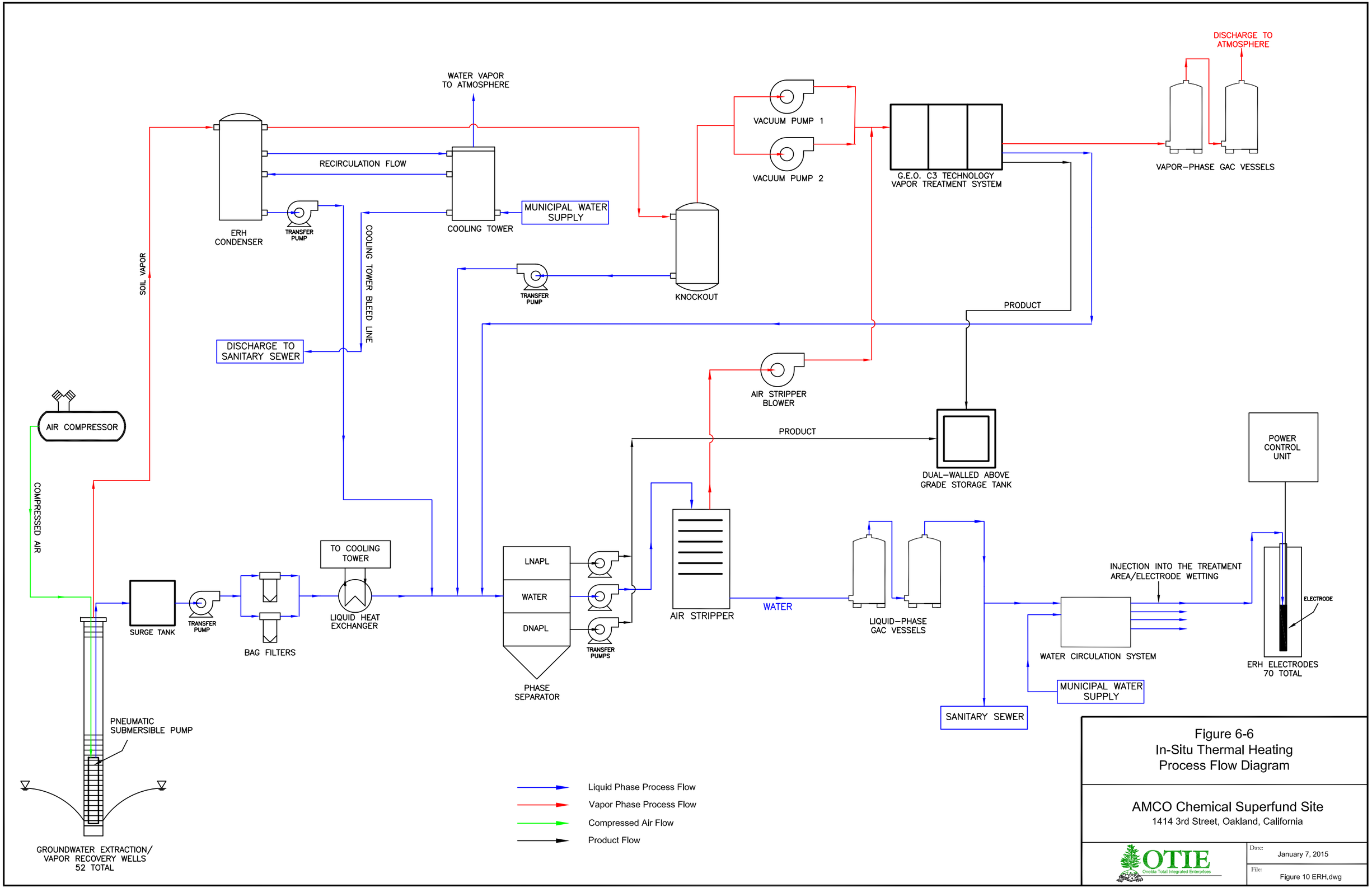

Figure 6-6
In-Situ Thermal Heating
Process Flow Diagram

AMCO Chemical Superfund Site
1414 3rd Street, Oakland, California

OTIE
Oneida Total Integrated Enterprises

Date: January 7, 2015

File: Figure 10 ERH.dwg

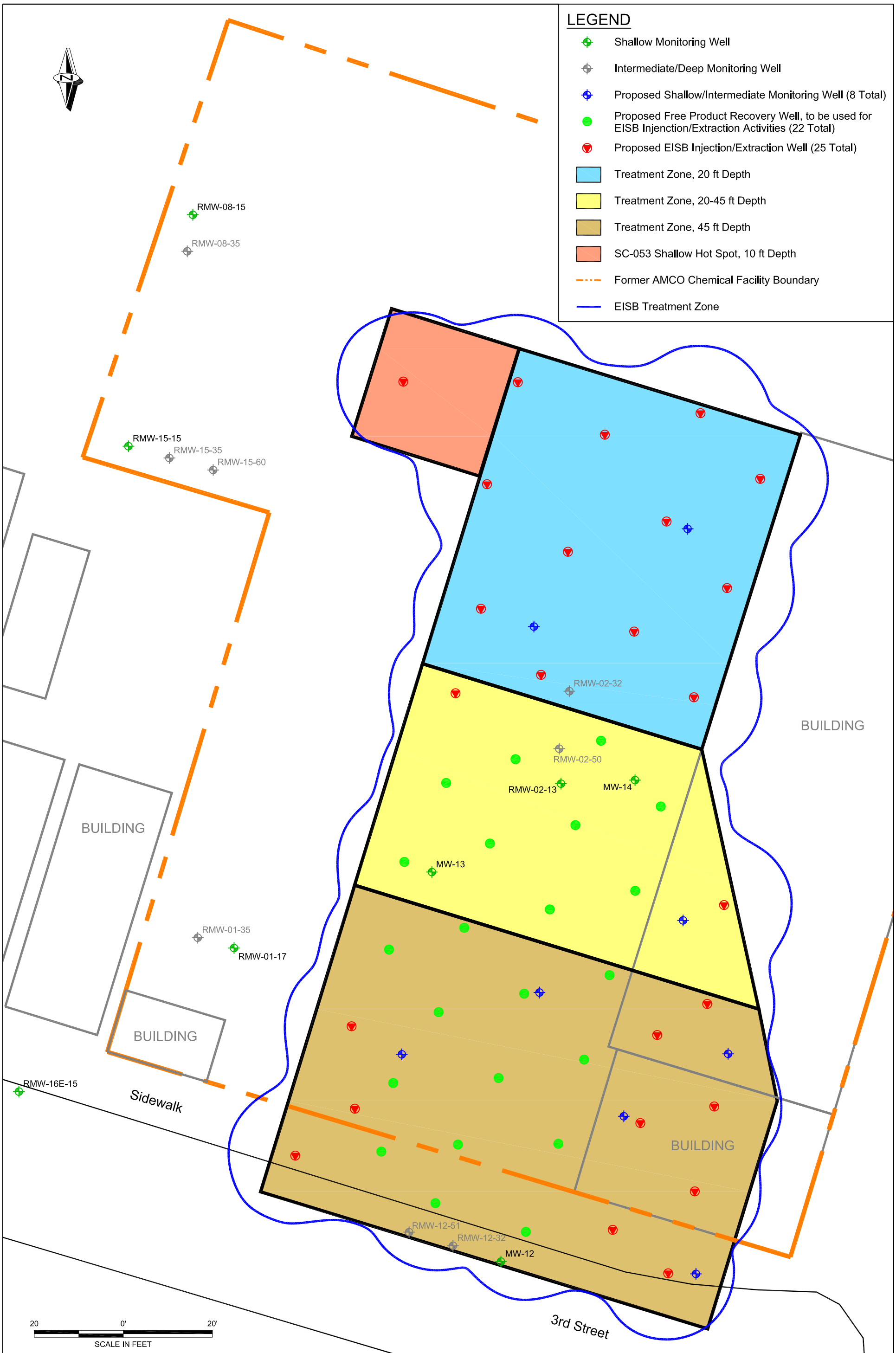

OTIE
Oneida Total Integrated Enterprises

USEPA, Region 9
AMCO Chemical Superfund Site
Oakland, California

FIGURE 6-7
Enhanced In-Situ Bioremediation Plan

AMCO-Proposed.dwg

OTIE
Oneida Total Integrated Enterprises

USEPA, Region 9
AMCO Chemical Superfund Site
Oakland, California

FIGURE 6-8
LNAPL Recovery System Plan

AMCO-Proposed.dwg

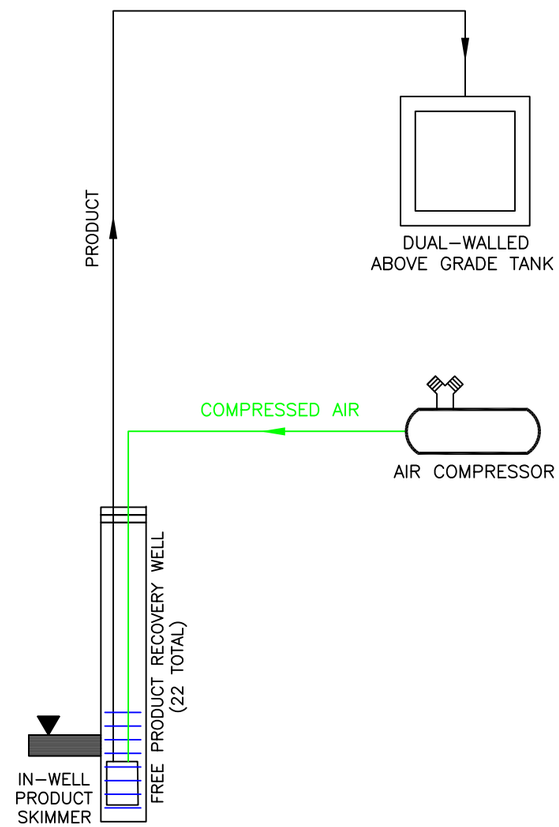

PHASE 1: FREE PRODUCT RECOVERY SYSTEM

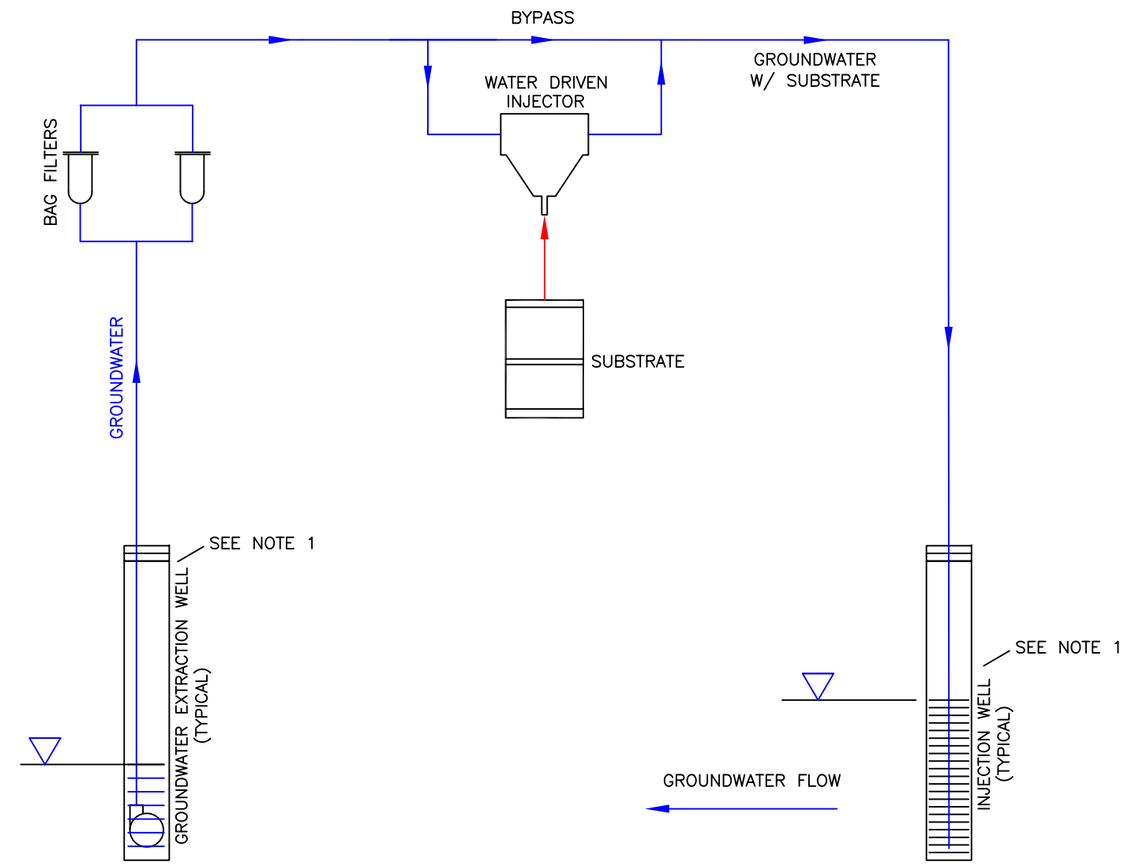

PHASE 2: HYDROGEN DONOR (SODIUM LACTATE AND EMULSIFIED VEGETABLE OIL)

PHASE 3: ELECTRON ACCEPTER (SULFATE)

Legend

- Substrate
- Product
- Groundwater

PHASE 1: 3 YEARS PRODUCT RECOVERY
PHASE 2: 5 YEARS REDUCTIVE DECHLORINATION BIOREMEDIATION
PHASE 3: 3 YEARS ANAEROBIC PETROLEUM BIOREMEDIATION

NOTE 1: EISB SYSTEM TO HAVE A TOTAL OF 47 GROUNDWATER INJECTION/EXTRACTION WELLS.

Figure 6-9
Enhanced In-Situ Bioremediation
Process Flow Diagram

AMCO Chemical Superfund Site
1414 3rd Street, Oakland, California

OTIE
Oneida Total Integrated Enterprises

Date: January 7, 2015

File: Figure 13 11x17.dwg

OTIE
Oneida Total Integrated Enterprises

USEPA, Region 9
AMCO Chemical Superfund Site
Oakland, California

FIGURE 6-10
Air Sparging/Soil Vapor Extraction Plan

AMCO-Proposed.dwg

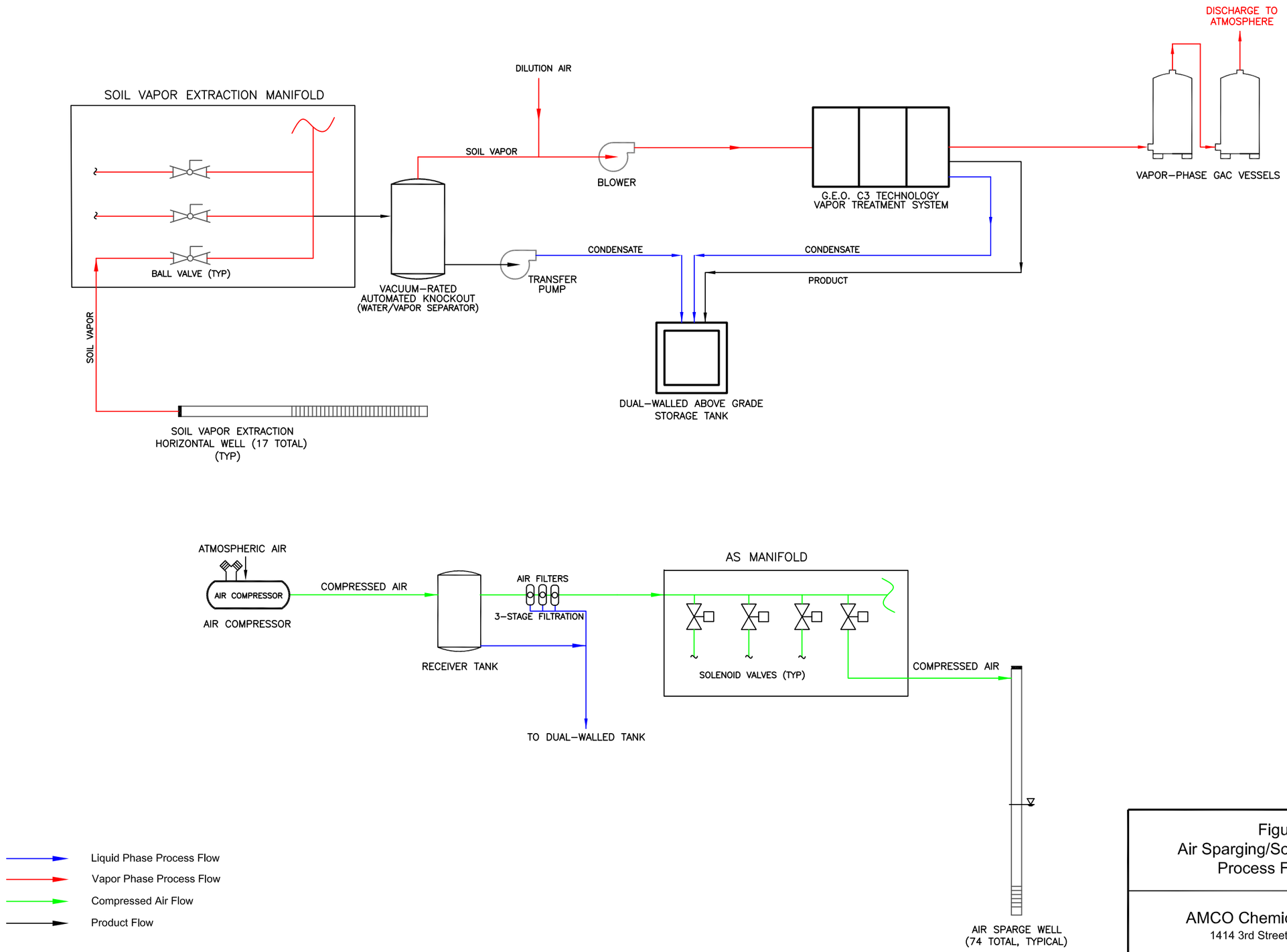

Figure 6-11
Air Sparging/Soil Vapor Extraction
Process Flow Diagram

AMCO Chemical Superfund Site
1414 3rd Street, Oakland, California

OTIE
Oneida Total Integrated Enterprises

January 7, 2015

File: Figure 15 11x17.dwg

TABLES

Table 2-1
List of Chemicals used by AMCO Chemical Corporation
AMCO Chemical Superfund Site
Oakland, California

VOCs	SVOCs	Organochlorine Pesticides	Organophosphate Pesticides	Organic Mixtures, Petroleum Based	Organic Mixtures	Organic Acids	Other Organic Compounds	Natural Extract Products	Inorganics	Other
Benzene	Creosote	DDT	Diazinon	Brake Fluid	Detergent (non-ionic)	Acetic Acid	Butyratic Dope	Linseed oil	Amonium carbonate	Carbon remover
Cyclohexane	Napthene	Dieldrin	Malathion	Fog Oil	Dry Cleaning Solvent	Citric Acid	Butyl Cellulose	Pine oil	Amonium hydroxide	Cutting fluid
Dichloromethane		Lindane (γ-BHT)		Gasoline (unleaded)	Epoxy Thinner	Oxalic Acid	Cyclohexylamine	Safflower oil	Cupric Sulfate	Deicing/ Defrosting fluid
Ethylbenzene				Kerosene	Graphite	Polyvinyl Acid (granular)	Diethylaminoethanol	Sesame oil	Ferric chloride	Anti-icing compound
Methylene chloride				Penetrating Oil	Stoddard Solvent	Steric Acid	Ethylene glycol	Tallow	Lime	Dust mop treating compound
o-Dichlorobenzene				Petroatum (petroleum jelly)			Glycols (other)	Turpentine	Magnesium chloride	Rat poison
Toluene				Turbine Oil			Isopropyl alcohol		Magnesium oxide	
Trichloroethene							Methanol		Orthophosphate acid	
Methyl ethyl ketone							Morpholine		Persulfate	
Xylenes							Paraffin (wax)		Sodium chromate	
							Polyurathane		Sodium hypochlorite	
							Propylene glycol		Sodium silicate	
							Tricresyl phosphate		Sodium thiosulfate	
							Triethanolamine			

Sources: AMCO 1965-66 Batchbook
AMCO 1971-1992 Batchbook
CH2M Hill, Remedial Investigation Report, 2011

Table 2-6
Light Non-Aqueous Phase Liquid (LNAPL) Composition
Sample Location: MW-14, Sample Date: 14, March 2005
AMCO Chemical Superfund Site Oakland, California

Analyte	Units	Analytical Results
Volatile Organic Compounds		
Trichloroethene	µg/kg	76,000,000 J
Toluene	µg/kg	36,000,000 J
cis-1,2-Dichloroethene	µg/kg	25,000,000 J
Xylenes, total	µg/kg	23,200,000 J
Ethylbenzene	µg/kg	3,400,000 J
1,1,1-Trichloroethane	µg/kg	2,400,000 J
Tetrachloroethene	µg/kg	1,900,000 J
1,1-Dichloroethane	µg/kg	1,300,000 J
Methylene chloride	µg/kg	820,000 J
1,2-Dichlorobenzene	µg/kg	300,000 J
Benzene	µg/kg	200,000 J
trans-1,2-Dichloroethene	µg/kg	150,000 J
Semi-volatile Organic Compounds		
2-Methylnaphthalene	µg/kg	15,000,000
Naphthalene	µg/kg	2,900,000
Phenanthrene	µg/kg	470,000 J
Acenaphthene	µg/kg	350,000 J
Fluorene	µg/kg	220,000
Fluoranthene	µg/kg	160,000
Pyrene	µg/kg	160,000 J
Dibenzofuran	µg/kg	140,000
Di-n-butyl phthalate	µg/kg	100,000
bis(2-Ethylhexyl)phthalate	µg/kg	76,000
Pentachlorophenol	µg/kg	63,000 J
Benzyl butyl phthalate	µg/kg	57,000 J
1,4-Dioxane (p-dioxane)	µg/kg	53,000 J
Chrysene	µg/kg	38,000
Anthracene	µg/kg	37,000
Benzo(a)anthracene	µg/kg	34,000
1,4-Dichlorobenzene	µg/kg	20,000 J
Carbazole	µg/kg	15,000
Benzo(b)fluoranthene	µg/kg	13,000
Benzo(k)fluoranthene	µg/kg	7,000
Metals		
Chromium	mg/kg	42
Copper	mg/kg	7.5 J
Organochlorine Pesticides/PCBs		
4,4'-DDD	µg/kg	3,100,000
4,4'-DDD	µg/kg	3,100,000
Dieldrin	µg/kg	360,000
beta-BHC	µg/kg	4,300
alpha-Chlordane	µg/kg	2,900 J
Aldrin	µg/kg	2,500 J
Methoxychlor	µg/kg	2,300 J
gamma-BHC	µg/kg	2,000 J
4,4'-DDT	µg/kg	1,900
Endrin ketone	µg/kg	1,400
alpha-BHC	µg/kg	1,100 J

Table 2-6
Light Non-Aqueous Phase Liquid (LNAPL) Composition *(continued)*
Sample Location: MW-14, Sample Date: 14, March 2005
AMCO Chemical Superfund Site Oakland, California

Analyte	Units	Analytical Results
Dioxins/Furans		
OCDD	ng/kg	985,000
OCDF	ng/kg	94,700
1,2,3,4,6,7,8-HpCDD	ng/kg	73,600
1,2,3,4,6,7,8-HpCDF	ng/kg	13,300
1,2,3,6,7,8-HxCDD	ng/kg	1,790
Total Dioxin Toxicity equivalent	ng/kg	1,400 J
1,2,3,4,7,8,9-HpCDF	ng/kg	616
1,2,3,7,8,9-HxCDD	ng/kg	456
1,2,3,7,8,9-HxCDF	ng/kg	213 J
1,2,3,4,7,8-HxCDD	ng/kg	178
2,3,4,6,7,8-HxCDF	ng/kg	170
1,2,3,6,7,8-HxCDF	ng/kg	163 J1
2,3,4,7,8-PeCDF	ng/kg	85.6
1,2,3,7,8-PeCDD	ng/kg	70.3 J
1,2,3,7,8-PeCDF	ng/kg	45.7 J1
Property		
Flash point	°C	18

Notes:
J estimated value
J1 estimated maximum possible concentration
R rejected for failure to meet quality control requirements
°C degrees Celcius
µg/kg micrograms per kilogram
mg/kg milligrams per kilogram
ng/kg nanograms per kilogram
Units are presented as reported by the laboratory.

Table 2-7
Maximum VOC Soil Concentrations in Treatment Area
December 2011 – January 2012 Sampling
AMCO Chemical Superfund Site
Oakland, California

Volatile Organic Compounds	Sample Depth ft bgs	Sample Location*	Maximum Concentration µg/kg	Soil Screening Level µg/kg
Xylenes, total	1	SC-029	967,000	630,000
cis-1,2-Dichloroethene	1	SC-021	1,380,000	160,000
1,2,4 Trimethylbenzene	3	SC-055	598,000	62,000
Tetrachloroethene	5	SC-053	737,000	22,000
Ethylbenzene	1	SC-029	259,000	5,400
1,1-Dichloroethane	3	SC-021	49,400	3,300
1,4 Dichlorobenzene	3	SC-061	137,000	2,400
Benzene	3	SC-021	14,600	1,100
Trichloroethene	10	SC-019	5,570,000	910
1,2 Dichloroethane	5	SC-053	19,800	430
Vinyl Chloride	8	SC-042	15,800	60

*ITSI-Gilbane, January 2012 event

Table 2-8
Maximum VOC Concentrations in Groundwater
AMCO Chemical Superfund Site
Oakland, California

Contaminant	Screening Level Concentration µg/L	Maximum Concentrations Concentration µg/L			
	2012	Sept 2006	Well	August 2012	Well
Trichloroethene	5	140	RMW-10-35	100	RMW-14-50
Toluene	150	12,000	RMW-02-13	24,000	MW-12
cis-1,2-Dichloroethene	6	25,000	MW-12	66,000	MW-12
Xylenes, total	1,750	3,200	RMW-02-13	2,020	RMW-02-13
Ethylbenzene	300	670	RMW-02-13	470	RMW-02-13
1,1,1-Trichloroethane	200	240	MW-12	850	MW-12
Tetrachloroethene	5	24	RMW-07-35	33	RMW-07-35
1,1-Dichloroethane	5	1,300	RMW-02-32	2,300	MW-12
Methylene chloride	5	140	RMW-02-32	<0.25	All Locations
1,2-Dichlorobenzene	600	5,700	RMW-02-32	200	RMW-01-35
Benzene	1	340	RMW-02-13	300	RMW-02-13
trans-1,2-Dichloroethene	10	220	MW-12	730	MW-12
1,1-Dichloroethene	6	19	RMW-12-32	380	MW-12
tert-Butyl Alcohol	12	240	RMW-12-32 and BPZ-01	820	RMW-10-35
Chlorobenzene	70	630	RMW-01-17	1,400	RMW-02-32
1,2,4 Trichlorobenzene	5	48	RMW-02-32	26	RMW-02-13
Vinyl Chloride	0.5	15,000	RMW-02-32	7,300	MW-12

Screened Depths of Monitoring Wells

Well	Top of Screen (ft bgs)	Bottom of Screen (ft bgs)
RMW-02-32	22	32
RMW-02-13	3	13
RMW-12-32	27	32
MW 12	5	19.5
MW 13	5	18.5
MW 14	5	18.65

Table 2-9
Physical and Chemical Attributes of VOCs
AMCO Chemical Superfund Site Oakland, California

Chemical Name	Other Common Names	Physical Properties	Boiling Point (°C)	Solubility (in Water at 25°C)	Log Kow b Octanol-water partitioning coeff.	Log Koc c Soil adsorption coeff.
1,1,1- Trichloroethane	methylchloroform methyltrichloromethane trichloromethylmethane	Colorless, oily liquid with a sweet odor. It evaporates easily at room temperature and burns easily. It is found in building materials, cleaning products, paints, and metal degreasing agents.[1]	74.1[2]	0.1495% (w/w) (1500 mg/L) [3]	2.49[4]	2.03[5]
1,1,2-Trichloroethane		Colorless liquid with a sharp, sweet odor like ether. It evaporates quickly and is insoluble in water, but miscible with other chlorinated solvents and soluble in alcohols, ethers, esters, and ketones. Forms hydrogen chloride, phosgene, carbon monoxide and other toxic gases when it contacts with hot surfaces or flames. It reacts with strong oxidizers, strong bases and chemically-active metals such as sodium, potassium, magnesium and powdered aluminum. It attacks many plastics, rubber, steel and zinc.	110[1]	No data	No data	No data
1,2,3-Trichlorobenzene	1,2,3-TCB 1,2,3-TrCB	Clear liquid used as a chemical intermediate in high heat applications such as glass tempering, in transformer oils, lubricants, and a coolant in electrical installations. It is also used as insecticide and fungicide and as a dye carrier.	219[1]	No data	No data	No data
1,2,4-Trichlorobenzene	1,2,4-Trichlorobenzol	Properties and uses are similar to 1,2,3-Trichlorobenzene. It is a clear liquid used as a chemical intermediate in high heat applications such as glass tempering, in transformer oils, lubricants, and a coolant in electrical installations. It is also used as insecticide and fungicide and as a dye carrier.	212[1]	No data	No data	No data
1,2,4-Trimethylbenzene	Pseudocumene, Asymmetrical trimethylbenzene, psi-cumene	Colorless, flammable liquid with a strong odor. It occurs naturally in coal tar and petroleum (about 3%). It is nearly insoluble in water, but easily soluble in ethanol, diethyl ether, and benzene. It is used as a liquid scintillator, a sterilizing agent and in the manufacture of dyes, perfumes, and resins. Another major use is as a gasoline additive.	169-171[2]	57 mg/L [17]	3.78 [19]	472 [19]

Table 2-9
Physical and Chemical Attributes of VOCs (*continued*)
AMCO Chemical Superfund Site Oakland, California

Chemical Name	Other Common Names	Physical Properties	Boiling Point (°C)	Solubility (in Water at 25°C)	Log Kow b Octanol-water partitioning coeff.	Log Koc c Soil adsorption coeff.
1,2-Dibromo-3-chloropropane		Colorless liquid with a sharp smell. It can be tasted in water at very low concentrations. Some industries use it to make another chemical that is used to make materials that resist burning. Large amounts were used in the past on certain farms to kill pests that harmed crops. Farmers in all states other than Hawaii stopped using this chemical in 1979. Hawaii stopped using it in 1985.	196[34]	1230 mg/L[34]	2.26[19]	2.17[35]
1,1-Dichloroethane		Colorless, oily liquid with a sweet odor. It evaporates easily at room temperature and burns easily. Used as an intermediate in the manufacture of 1,1,1-trichloroethane, and to a lesser extent, vinyl chloride and high vacuum rubber. In the past, it was used as a surgical anesthetic.[1]	57.3[6]	0.55 g/100g[1]	1.79[1]	1.48[1]
1,2-Dichloroethane	Ethylene dichloride Ethane dichloride Dutch liquid, Dutch oil Freon 150	A clear liquid with a pleasant smell and sweet taste. The most common use is in the production of vinyl chloride which is used to make a variety of plastic and vinyl products including polyvinyl chloride (PVC) pipes, furniture and automobile upholstery, wall coverings, housewares, and automobile parts. It is also used to as a solvent and is added to leaded gasoline to remove lead.	83.5 [7]	8.69 x 103 mg/L [17]	1.48 [9]	1.67 [28]
1,2-Dichlorobenzene		Colorless to pale yellow liquid used to make herbicides.[1]	180[7]	156 mg/L[8]	3.43[9]	2.51[10]
1,2-Dichloropropane		Colorless, flammable liquid with a chloroform-like odor. It is moderately soluble in water and readily evaporates into air. Production in the United States has declined over the past 20 years. It was used in the past as a soil fumigant, chemical intermediate and industrial solvent and was found in paint strippers, varnishes, and furniture finish removers. Most of these uses were discontinued. Currently used as a chemical intermediate to make perchloroethylene and several other related chlorinated chemicals.	96.37 [36]	2700 mg/L [3]	1.99[19]	1.67[10]

Table 2-9
Physical and Chemical Attributes of VOCs (*continued*)
AMCO Chemical Superfund Site Oakland, California

Chemical Name	Other Common Names	Physical Properties	Boiling Point (°C)	Solubility (in Water at 25°C)	Log Kow b Octanol-water partitioning coeff.	Log Koc c Soil adsorption coeff.
1,4 Dichlorobenzene	para-Dichlorobenzene p-Dichlorobenzene p-DCB PDB Paramoth Para crystals Paracide	Colorless to white solid with a strong, pungent odor. When exposed to air, it slowly changes from a solid to a vapor. It is used to control moths, molds, and mildew and is used as a disinfectant in waste containers and restrooms.	174[7]	80 mg/L [29]	3.44 [13]	2.44 [10]
1,1,2,2-Tetrachloroethane	s-Tetrachloroethane Acetylene tetrachloride R-130 TeCA	Colorless, dense liquid that has a sweet, chloroform like odor. It has the highest solvent power of any chlorinated hydrocarbon. It was once widely used as a solvent and as an intermediate in the industrial production of trichloroethylene, tetrachloroethylene, and 1,2-dichloroethylene. As a refrigerant, it is used under the name R-130.	146.5[11]	1 g/350mL[11]	2.39[19]	No data
1,3,5-Trimethylbenzene	Mesitylene	Clear liquid with a strong, peculiar odor. Used most often in solvents and thinners, Widely used to make paint thinner, automobile fuel, dye, and wood stain	164.7[1]	57 mg/L [1]	3.78 [17]	No data
2-Hexanone	Methyl n-butyl ketone, MBK Propyl acetone.	Clear, colorless liquid with a sharp odor. It dissolves very easily in water, and can evaporate easily into the air as a vapor. No longer made or used in the United States. It was used in paint and paint thinner, to make other chemical substances, and to dissolve oils and waxes. It is formed as a waste product resulting from industrial activities such as making wood pulp and producing gas from coal, and in oil shale operations.	128[12]	20,000-35,000 mg/L[12]	1.38 [18]	No data
4-Methyle-2-pentanone	MIBK Isopropylacetone Hexone Isobutyl methyl ketone, 4-Methylpentan-2-one 4-methyl-2-pentanone 4-methylpentan-2-one 2-methyl-4-pentanone 2-methylpropyl methyl ketone	Colorless liquid widely used as a solvent. Has quite low solubility in water, making it useful for liquid-liquid extraction. It can be used to extract gold, silver and other precious metals from cyanide solutions, such as those found at gold mines, to determine the levels of those dissolved metals. Diisobutyl ketone (DIBK), a related lipophilic ketone, is also used for this purpose. Methyl isobutyl ketone is also used as a denaturing agent for denatured alcohol. When mixed with water or isopropyl	117[19]	17,000 mg/L[19]	1.09[19]	19[19]

Table 2-9
Physical and Chemical Attributes of VOCs (*continued*)
AMCO Chemical Superfund Site Oakland, California

Chemical Name	Other Common Names	Physical Properties	Boiling Point (°C)	Solubility (in Water at 25°C)	Log Kow b Octanol-water partitioning coeff.	Log Koc c Soil adsorption coeff.
	4-methyl-2-oxopentane isobutylmethyl ketone isohexanone	alcohol MIBK serves as a developer for PMMA electron beam lithography resist. MIBK is used as a solvent for CS in the preparation of the CS spray used currently by British police forces				
Acetone	Dimethyl ketone 2-Propanone beta-Ketopropane	Colorless liquid with a distinct smell and taste. It evaporates easily, is flammable, and dissolves in water. Acetone is used to make plastic, fibers, drugs, and other chemicals. It is also used to dissolve other substances. It is also found naturally in the environment in plants, trees, volcanic gases, forest fires, and as a product of the breakdown of body fat.	56.2[1]	Completely miscible[1]	-.024[32]	0.73[31]
Benzene		Benzene is a colorless liquid with a sweet odor. It evaporates into the air very quickly and dissolves slightly in water. It is highly flammable and is formed from both natural processes and human activities.[1]	80.1[2]	w/w 0.188%[2]	2.13[11]	1.8 –1.9[11]
Chlorobenzene		Colorless, flammable liquid with an aromatic, almond-like odor. Some of it will dissolve in water, but it readily evaporates into air. Chlorobenzene production in the United States has declined by more than 60% from its peak in 1960. It was used in the past to make other chemicals, such as phenol and DDT. Now chlorobenzene is used as a solvent for some pesticide formulations, to degrease automobile parts, and as a chemical intermediate to make several other chemicals	132[23]	500 mg/L[17]	2.84[17]	2.52[33]
Chloroethane		A highly flammable, colorless gas at room temperature and pressure. It has a characteristically sharp smell and evaporates quickly when exposed to air. In the past it was used in leaded gasoline and It is currently used in the production of cellulose, dyes, medicinal drugs, and as a solvent and refrigerant. It is also used to anesthetize the skin before medical procedures and as a treatment in sports injuries.	32.5[2]	0.574 g/100mL[2]	1.43[4]	1.52[31]

Table 2-9
Physical and Chemical Attributes of VOCs (*continued*)
AMCO Chemical Superfund Site Oakland, California

Chemical Name	Other Common Names	Physical Properties	Boiling Point (°C)	Solubility (in Water at 25°C)	Log Kow b Octanol-water partitioning coeff.	Log Koc c Soil adsorption coeff.
Cis-1,2-Dichloroethene	1,2-Dichloroethene 1,2-dichloroethyle	Highly flammable, colorless liquid with a sharp, harsh odor. Used to produce solvents and in chemical mixtures.[1]	59.6 @ 745 mm Hg 60.3 @ 760 mm Hg[12]	3.5 g/L[1,3]	2.09[13]	2.06[1]
Ethylbenzene		A colorless liquid found in a number of products including gasoline and paints. It is naturally found in coal tar and petroleum and is also found in manufactured products such as inks, pesticides, and paints. Ethylbenzene is used primarily to make another chemical, styrene. Other uses include as a solvent, in fuels, and to make other chemicals.	136.19[14]	@ 0: 197 mg/L[15] 15: 140 mg/L[16] 20: 152 mg/L[17] 25: 160 mg/L[18]	4.34[19]	2.38[20]
Isopropylbenzene	Cumene	Colorless, flammable liquid with a sharp, penetrating, gasoline-like odor. It is a constituent of crude oil and refined fuels. Nearly all the Isoprolybenzene that is produced is converted to cumene hydroperoxide, which is an intermediate in the synthesis of other industrially important chemicals, such as phenol and acetone. Isopropylbenzen is also used as a thinner for paints, lacquers, and enamels and as a component in high octane fuels.	152 [1]	50 mg/L [1]	3.66 [19]	3.54 [19]
Methyl tert-Butyl Ether	MTBE	Colorless flammable liquid with a distinctive, disagreeable odor. Used since the 1980s as an additive for unleaded gasoline to achieve more efficient burning. Also used as a medical treatment to dissolve gallstones.	55.2[7]	4.8 g/100g[37]	1.24[19]	2.89[19]
Methylene chloride	dichloromethane	A colorless liquid with a mild, sweet odor. Used as an industrial solvent and as a paint stripper. It may also be found in some aerosol and pesticide products and is used in the manufacture of photographic film.[1]	40[7]	20,000 mg/L[17]	1.3[13]	1.4[21]

Table 2-9
Physical and Chemical Attributes of VOCs (*continued*)
AMCO Chemical Superfund Site Oakland, California

Chemical Name	Other Common Names	Physical Properties	Boiling Point (°C)	Solubility (in Water at 25°C)	Log Kow b Octanol-water partitioning coeff.	Log Koc c Soil adsorption coeff.
tert-Butyl Alcohol	2-methyl-2-propanol 2M2P	Used as a solvent, ethanol denaturant, paint remover ingredient, and gasoline octane booster and oxygenate. It is a chemical intermediate used to produce MTBE and ETBE.	82.41[19]	235,208 mg/L[19]	0.689[19]	0.62[19]
Tetrachloroethene	tetrachloroethylene perchloroethylene PCE tetrachloroethene.	A nonflammable liquid at room temperature. It evaporates easily into the air and has a sharp, sweet odor. Was widely used for dry cleaning fabrics and metal-degreasing. It is also used to make other chemicals and is used in some consumer products.[1]	121[7]	150 mg/L[1]	3.40[1]	2.2- 2.7[22]
Toluene		Clear, colorless liquid with a distinctive smell. Occurs naturally in crude oil and in the tolu tree. It is also produced in the process of making gasoline and other fuels from crude oil and making coke from coal. Used in making paints, paint thinners, fingernail polish, lacquers, adhesives, and rubber and in some printing and leather tanning processes.[1]	110.6[23]	534.8 mg/L[24]	2.72[24]	1.57- 2.25[24]
Trans 1,2-Dichloroethene	Pseudocumene Asymmetrical trimethylbenzene psi-cumene	Colorless, flammable liquid with a strong odor. It occurs naturally in coal tar and petroleum and is produced during petroleum distillation. It is nearly insoluble in water but easily soluble in ethanol, diethyl ether, and benzene.	42.2 @ 745mm Hg 48.0 – 48.5 @ 760 mm Hg[12]	6.3 g/L[1,3]	2.09[4]	1.56[1]
trans-1,3-Dichloropropene	Propene	Colorless liquid	112[1]	No data	No data	No data
Trichloroethene	Trichloroethylene TCE	A nonflammable, colorless liquid with a somewhat sweet odor and a sweet, burning taste. Used mainly as a solvent to remove grease from metal parts, but it is also an ingredient in adhesives, paint removers, typewriter correction fluids, and spot removers.[1]	86.7[25]	@ 20: 1.070 g/L[25] 25: 1.366 g/L[26]	2.42[9]	2.03- 2.66[27]

Table 2-9
Physical and Chemical Attributes of VOCs (*continued*)
AMCO Chemical Superfund Site Oakland, California

Chemical Name	Other Common Names	Physical Properties	Boiling Point (°C)	Solubility (in Water at 25°C)	Log Kow b Octanol-water partitioning coeff.	Log Koc c Soil adsorption coeff.
Vinyl Chloride	Vinyl chloride monomer VCM Chloroethylene Refrigerant-1140 Chloroethene Ethylene monochloride.	A colorless gas with a mild, sweet odor. It is used to make polyvinyl chloride (PVC). PVC is used to make a variety of plastic products, including pipes, wire and cable coatings, and packaging materials. In the past, it was used as a refrigerant.	-13.37 [2]	2,763 mg/L [19]	1.36 [30]	1.99 [31]
Xylene		A colorless, sweet-smelling liquid that catches on fire easily. It occurs naturally in petroleum and coal tar. It is one of the top 30 chemicals produced in the United States in terms of volume. It is used as a solvent and in the printing, rubber, and leather industries. It is also used as a cleaning agent, a thinner for paint, and in paints and varnishes. It is found in small amounts in airplane fuel and gasoline.	137-140[11]	106 mg/L[11]	3.2[11]	2.2 [11]

[1] Hazardous Substances Data Bank (HSDB) 2012
[2] Budavari 1989
[3] Horvath 1982
[4] Hansch and Leo 1985
[5] Friesel et al 1984
[6] O'Neil et al 2006
[7] Lide 2000
[8] Banjeree et al 1980
[9] Hansch et al 1995
[10] Chiou et al 1983
[11] ATSDR 2014
[12] Weast 1983, Merck 1989
[13] Hansch and Leo 1985
[14] Cannella 2007
[15] Polak and Lu 1973
[16] Rosen et al 1963, Verschueren 1983
[17] Verschueren 1983
[18] Amoore and Hautala 1983
[19] EPA 1982
[20] Hodson and Williams 1986
[21] Roy and Griffin 1982
[22] Seip et al 1986, Zytner et all 1989
[23] Weast 1989
[24] Howard 1990
[25] McNeill 1979
[26] Tewari et al 1982
[27] Gabarini and Lion 1986
[28] Borisover and Graber 1997
[29] Yallowsky and He 2003
[30] NIOSH 1986
[31] Lyman et al 1982
[32] Collander 1951, Sangster 1989
[33] Mabey et al 1982
[34] Windholz 1983
[35] Sabljic 1984, Wilson et al 1981
[36] Riddick et al 1986
[37] Merck 1989

Table 3-1
Summary of Cancer Risks and Noncancer Hazards - Soil
AMCO Chemical Superfund Site
Oakland, California

Exposure Scenario/ Receptor	Former AMCO Chemical Facility			Background		
	Cancer	Noncancer	Risk Drivers	Cancer	Noncancer	Risk Drivers
Worker						
Industrial Worker						
Shallow Soil	1.E-04	1	Vinyl chloride, xylenes, naphthalene, 2-methylnaphthalene, manganese, aluminum, cadmium, aldrin and dieldrin	1.E-05	0.8	Arsenic and thallium
Deep Soil	1.E-04	1				
Future Construction Worker						
Shallow Soil	1.E-05	23		1.E-06	3	
Deep Soil	1.E-05	20				
Hypothetical Resident						
Future Adult Resident (24 years)						
Shallow Soil	1.E-04	1		1.E-05	1	
Deep Soil	1.E-04	2				
Future Child Resident (6 years)						
Shallow Soil	2.E-04	10		3.E-05	11	
Deep Soil	2.E-04	11				
Sum of Adult plus Child (30 years)						
Shallow Soil	3.E-04			4.E-05		
Deep Soil	3.E-04					

References

Soil Exposure Parameters and Methods:

EPA, 1989: Risk Assessment Guidance for Superfund (RAGS) Volume 1 Human Health Evaluation Manual. Part A.

EPA, 1996: Soil Screening Guidance.

CalEPA, DTSC, HERD, 2005: Recommended DTSC Default Exposure Factors for Use in Risk Assessment at California Military Facilities.

Toxicity Values:

EPA, 2010: Integrated Risk Information System.

OEHHA, 2010: California Office of Environmental Health Hazard Assessment. Toxicity Criteria Database.

OEHHA, 2007: California Office of Environmental Health Hazard Assessment. Child Reference Dose.

Table 3-2
Cancer Risk Results Detailed Summary for Risk Drivers - Future Adult/Child Resident Groundwater
AMCO Chemical Superfund Site Oakland, California

Carcinogenic Effects Risk Results - Excess Lifetime Cancer Risk Estimates										
Future Residential										
	Adult Resident					Child Resident				
Reasonable Maximum Exposure										
Chemical of Potential Concern	**Ingestion**	**Dermal**	**Inhalation**	**Total**	**% Contribution**	**Ingestion**	**Dermal**	**Inhalation**	**Total**	**% Contribution**
Metals										
Arsenic	4.00E-03	2.10E-05		4.10E-03	9%	2.40E-03	1.60E-05		2.40E-03	9%
Chromium (VI)	1.60E-06	1.70E-08		1.70E-06	0%	9.60E-07	1.30E-08		9.70E-07	0%
Subtotal Metals	**4.00E-03**	**2.10E-05**		**4.10E-03**	**9%**	**2.40E-03**	**1.60E-05**		**2.40E-03**	**9%**
Pesticides/PCBs										
4,4'-DDD	1.10E-05	7.80E-05		9.00E-05	0.20%	6.60E-06	4.40E-05		5.10E-05	0.20%
4,4'-DDE	2.50E-06	1.50E-05		1.80E-05	0.04%	1.40E-06	8.50E-06		1.00E-05	0.04%
4,4'-DDT	5.70E-07	6.60E-06		7.20E-06	0.02%	3.40E-07	3.70E-06		4.00E-06	0.02%
Aldrin	6.50E-05	5.80E-06		7.00E-05	0.20%	3.80E-05	3.30E-06		4.10E-05	0.20%
alpha-BHC	1.80E-05	7.80E-06		2.60E-05	0.06%	1.00E-05	4.40E-06		1.50E-05	0.05%
alpha-Chlordane	4.10E-06	8.40E-06		1.20E-05	0.03%	2.40E-06	4.70E-06		7.10E-06	0.03%
Atrazine	4.30E-06	5.50E-07		4.90E-06	0.01%	2.50E-06	3.10E-07		2.80E-06	0.01%
beta-BHC	6.20E-06	2.70E-06		9.00E-06	0.02%	3.60E-06	1.50E-06		5.20E-06	0.02%
Dieldrin	1.40E-04	9.50E-05		2.30E-04	0.50%	8.10E-05	5.40E-05		1.30E-04	0.50%
gamma-BHC	3.40E-06	1.50E-06		4.90E-06	0.01%	2.00E-06	8.40E-07		2.80E-06	0.01%
gamma-Chlordane	2.80E-06	5.80E-06		8.60E-06	0.02%	1.60E-06	3.30E-06		4.90E-06	0.02%
Heptachlor	4.70E-06	2.20E-06		6.90E-06	0.02%	2.70E-06	1.20E-06		4.00E-06	0.02%
Heptachlor epoxide	1.00E-05	1.60E-05		2.60E-05	0.06%	6.00E-06	8.80E-06		1.50E-05	0.05%
Aroclor-1260	1.80E-05	6.40E-04		6.60E-04	1.40%	1.10E-05	3.60E-04		3.70E-04	1.40%
Subtotal Pesticides/PCBs	**2.90E-04**	**8.90E-04**		**1.20E-03**	**3%**	**1.70E-04**	**5.00E-04**		**6.70E-04**	**2%**

Table 3-2
Cancer Risk Results Detailed Summary for Risk Drivers - Future Adult/Child Resident Groundwater *(continued)*
AMCO Chemical Superfund Site Oakland, California

Carcinogenic Effects Risk Results - Excess Lifetime Cancer Risk Estimates										
Future Residential										
	Adult Resident					Child Resident				
Reasonable Maximum Exposure										
Chemical of Potential Concern	**Ingestion**	**Dermal**	**Inhalation**	**Total**	**% Contribution**	**Ingestion**	**Dermal**	**Inhalation**	**Total**	**% Contribution**
SVOCs/VOCs										
1,4-Dioxane (p-dioxane)	2.00E-04	7.10E-07		2.00E-04	0.40%	1.20E-04	4.20E-07		1.20E-04	0.40%
2,4,6-Trichlorophenol	4.70E-06	3.60E-06		8.30E-06	0.02%	2.70E-06	2.00E-06		4.80E-06	0.02%
Benzo(a)anthracene	1.00E-05	1.30E-04		1.40E-04	0.30%	5.90E-06	7.20E-05		7.80E-05	0.30%
Benzo(a)pyrene	5.60E-05	1.20E-03		1.30E-03	3%	3.30E-05	6.80E-04		7.20E-04	3%
Benzo(b)fluoranthene	8.60E-06	1.90E-04		2.00E-04	0.40%	5.00E-06	1.10E-04		1.10E-04	0.40%
Benzo(k)fluoranthene	5.20E-06	1.10E-04		1.10E-04	0.20%	3.00E-06	6.00E-05		6.30E-05	0.20%
bis(2-Ethylhexyl)phthalate	2.20E-06	4.20E-06		6.50E-06	0.01%	1.30E-06	2.40E-06		3.70E-06	0.01%
Bromoform	1.20E-06	8.50E-08	2.20E-06	3.50E-06	0.01%	7.20E-07	4.80E-08	1.30E-06	2.00E-06	0.01%
Chrysene	1.20E-06	1.60E-05		1.70E-05	0.04%	7.20E-07	8.80E-06		9.50E-06	0.03%
Dibenz(a,h)anthracene	3.10E-06	1.00E-04		1.10E-04	0.20%	1.80E-06	5.80E-05		5.90E-05	0.20%
Indeno(1,2,3-c,d)pyrene	2.30E-06	4.90E-05		5.20E-05	0.11%	1.30E-06	2.80E-05		2.90E-05	0.11%
Naphthalene	1.50E-04	1.00E-04	7.60E-04	1.00E-03	2%	9.00E-05	5.70E-05	4.50E-04	5.90E-04	2%
Nitrobenzene			1.30E-05	1.30E-05	0%			7.70E-06	7.70E-06	0%
N-Nitrosodi-n-propylamine	1.30E-04	4.40E-06		1.40E-04	0.30%	7.70E-05	2.50E-06		7.90E-05	0.30%
Pentachlorophenol	1.30E-05	1.50E-04		1.70E-04	0.40%	7.40E-06	8.60E-05		9.30E-05	0.30%
1,1,2,2-Tetrachloroethane	2.40E-05	3.00E-06	1.20E-04	1.50E-04	0.30%	1.40E-05	1.70E-06	7.20E-05	8.80E-05	0.30%
1,1,2-Trichloroethane	9.00E-06	8.40E-07	3.60E-05	4.50E-05	0.10%	5.30E-06	4.70E-07	2.10E-05	2.70E-05	0.10%
1,1-Dichloroethane	3.00E-05	2.30E-06	1.50E-04	1.80E-04	0.40%	1.70E-05	1.30E-06	8.80E-05	1.10E-04	0.40%
1,1-Dichloroethene			1.80E-04	1.80E-04	0.40%			1.00E-04	1.00E-04	0.40%
1,2,4-Trichlorobenzene	4.10E-06	5.40E-06		9.50E-06	0.02%	2.40E-06	3.00E-06		5.40E-06	0.02%
1,2-Dibromo-3-chloropropane	1.60E-04	3.00E-05	7.90E-04	9.70E-04	2%	9.20E-05	1.70E-05	4.60E-04	5.70E-04	2%
1,2-Dichloroethane	1.20E-05	9.60E-07	6.10E-05	7.40E-05	0.20%	7.20E-06	5.50E-07	3.60E-05	4.40E-05	0.16%
1,2-Dichloropropane	1.70E-06	1.70E-07	8.40E-06	1.00E-05	0.02%	1.00E-06	9.60E-08	4.90E-06	6.00E-06	0.02%
1,4-Dichlorobenzene	1.10E-05	7.40E-06	3.90E-04	4.10E-04	0.90%	6.40E-06	4.10E-06	2.30E-04	2.40E-04	0.90%
Benzene	3.80E-04	5.70E-05	1.90E-03	2.30E-03	5%	2.20E-04	3.40E-05	1.10E-03	1.40E-03	5%
Carbon tetrachloride	4.20E-07	1.10E-07	2.10E-06	2.60E-06	0.01%	2.50E-07	6.30E-08	1.20E-06	1.50E-06	0.01%
Chloroethane			1.30E-05	1.30E-05	0.03%			7.80E-06	7.80E-06	0.03%
Chloroform	1.30E-06	1.20E-07	3.80E-06	5.20E-06	0.01%	7.50E-07	6.50E-08	2.30E-06	3.10E-06	0.01%
cis-1,3-Dichloropropene	3.90E-06	2.10E-07	1.10E-05	1.50E-05	0.03%	2.30E-06	1.20E-07	6.50E-06	8.90E-06	0.03%
Ethylbenzene	4.60E-05	2.80E-05	1.80E-04	2.60E-04	1%	2.70E-05	1.60E-05	1.10E-04	1.50E-04	1%
Methyl tert-butyl ether	3.40E-07	7.80E-09	8.60E-07	1.20E-06	0.00%	2.00E-07	4.60E-09	5.10E-07	7.10E-07	0.00%
Methylene chloride	1.10E-06	4.00E-08	1.30E-06	2.50E-06	0.01%	6.30E-07	2.40E-08	7.90E-07	1.40E-06	0.01%
trans-1,3-Dichloropropene	3.90E-06	2.10E-07	1.10E-05	1.50E-05	0.03%	2.20E-06	1.20E-07	6.30E-06	8.70E-06	0.03%
Trichloroethene	3.20E-06	5.40E-07	1.90E-05	2.20E-05	0%	1.80E-06	3.00E-07	1.10E-05	1.30E-05	0%
Vinyl chloride	1.10E-02	5.80E-04	2.10E-02	3.20E-02	70%	6.40E-03	3.50E-04	1.20E-02	1.90E-02	70%
Subtotal SVOCs/VOCs	**1.20E-02**	**2.80E-03**	**2.50E-02**	**4.10E-02**	**87%**	**7.20E-03**	**1.60E-03**	**1.50E-02**	**2.40E-02**	**88%**

Table 3-2
Cancer Risk Results Detailed Summary for Risk Drivers - Future Adult/Child Resident Groundwater (continued)
AMCO Chemical Superfund Site Oakland, California

Carcinogenic Effects Risk Results - Excess Lifetime Cancer Risk Estimates										
Future Residential										
	Adult Resident					Child Resident				
Reasonable Maximum Exposure										
Chemical of Potential Concern	**Ingestion**	**Dermal**	**Inhalation**	**Total**	**% Contribution**	**Ingestion**	**Dermal**	**Inhalation**	**Total**	**% Contribution**
Dioxans/Furans										
1,2,3,4,6,7,8-HpCDD	6.50E-06	2.50E-04		2.60E-04	0.60%	3.80E-06	1.40E-04		1.50E-04	0.50%
1,2,3,4,6,7,8-HpCDF	1.30E-06	4.70E-05		4.80E-05	0.10%	7.80E-07	2.60E-05		2.70E-05	0.10%
1,2,3,4,7,8,9-HpCDF	1.40E-07	4.80E-06		4.90E-06	0.01%	8.00E-08	2.70E-06		2.80E-06	0.01%
1,2,3,4,7,8-HxCDD	3.70E-07	1.10E-05		1.20E-05	0.03%	2.20E-07	6.40E-06		6.60E-06	0.02%
1,2,3,4,7,8-HxCDF	1.20E-06	3.30E-05		3.50E-05	0.07%	7.00E-07	1.90E-05		1.90E-05	0.07%
1,2,3,6,7,8-HxCDD	1.90E-06	5.80E-05		6.00E-05	0.13%	1.10E-06	3.30E-05		3.40E-05	0.12%
1,2,3,6,7,8-HxCDF	2.30E-07	6.40E-06		6.60E-06	0.01%	1.30E-07	3.60E-06		3.70E-06	0.01%
1,2,3,7,8,9-HxCDF	5.40E-07	1.50E-05		1.60E-05	0.03%	3.20E-07	8.50E-06		8.90E-06	0.03%
1,2,3,7,8-PeCDD	1.50E-06	3.80E-05		3.90E-05	0.10%	8.90E-07	2.10E-05		2.20E-05	0.08%
1,2,3,7,8-PeCDF	1.60E-07	3.60E-06		3.70E-06	0.01%	9.40E-08	2.00E-06		2.10E-06	0.01%
2,3,4,6,7,8-HxCDF	5.60E-07	1.50E-05		1.60E-05	0.03%	3.20E-07	8.70E-06		9.00E-06	0.03%
2,3,4,7,8-PeCDF	1.90E-06	4.10E-05		4.30E-05	0.09%	1.10E-06	2.30E-05		2.40E-05	0.09%
2,3,7,8-TCDF	2.40E-07	4.20E-06		4.50E-06	0.01%	1.40E-07	2.40E-06		2.50E-06	0.01%
OCDF	1.00E-07	4.60E-06		4.70E-06	0.01%	6.10E-08	2.60E-06		2.60E-06	0.01%
OCDD	3.10E-07	1.50E-05		1.50E-05	0.03%	1.80E-07	8.30E-06		8.50E-06	0.03%
Subtotal Dioxans/Furans	**1.80E-05**	**5.70E-04**		**5.90E-04**	**1.30%**	**1.00E-05**	**3.20E-04**		**3.30E-04**	**1.20%**
Total:	**1.70E-02**	**4.30E-03**	**2.50E-02**	**4.64E-02**		**9.70E-03**	**2.40E-03**	**1.50E-02**	**2.72E-02**	

Total Estimated Cancer Risk Across All Exposure Routes	**5.E-02**				**3.0E-02**
Sum of Adult and Child Excess Lifetime Cancer Risk (30 year exposure):		**2.6E-02**	**6.7E-03**	**4.0E-02**	**7.36E-02**
Total Estimated Adult plus Child Cancer Risk Across All Exposure Routes:					**7.E-02**

Notes

Subtotals and Total Cumulative risk of all chemicals evaluated is summed.

% Contribution (Subtotal % Contribution) = Percent contribution of total cancer risk for all chemicals evaluated.

References

Groundwater Exposure Parameters and Methods:

EPA, 1989: Risk Assessment Guidance for Superfund (RAGS) Volume 1 Human Health Evaluation Manual. Part A.

EPA, 1997: Exposure Factors Handbook. Volume 1, General Factors. August.

EPA, 2004a. RAGS Part E, Supplemental Guidance for Dermal Risk Assessment.

EPA, 2004b. User's Guide and Background Technical Document for Preliminary Remediation Goals Table Region 9. October.

Toxicity Values:

EPA, 2010: Integrated Risk Information System.

OEHHA, 2010: California Office of Environmental Health Hazard Assessment. Toxicity Criteria Database.

OEHHA, 2007: California Office of Environmental Health Hazard Assessment. Child Reference Dose.

Table 3-3
Noncancer Risk Results Detailed Summary for Risk Drivers - Future Adult/Child Resident - Groundwater
AMCO Chemical Superfund Site Oakland, California

Non-Carcinogenic Effects Risk Results - Hazard Quotients										
	Future Residential									
	Adult Resident					Child Resident				
	Reasonable Maximum Exposure									
Chemical of Potential Concern	**Ingestion**	**Dermal**	**Inhalation**	**Total**	**% Contribution**	**Ingestion**	**Dermal**	**Inhalation**	**Total**	**% Contribution**
Metals										
Aluminum	2.60E-01	1.30E-03		2.60E-01	0.10%	6.00E-01	4.00E-03		6.00E-01	0.10%
Antimony	1.00E-01	5.40E-04		1.00E-01	0.04%	2.40E-01	1.60E-03		2.40E-01	0.04%
Arsenic	2.60E+01	1.40E-01		2.60E+01	10%	6.10E+01	4.00E-01		6.20E+01	10%
Boron	5.90E-01	3.10E-03		5.90E-01	0.20%	1.40E+00	9.10E-03		1.40E+00	0.20%
Cadmium	6.90E-02	3.60E-04		6.90E-02	0.03%	7.30E+00	4.80E-02		7.30E+00	1.17%
Cobalt	8.10E-01	1.70E-03		8.10E-01	0%	1.90E+00	5.00E-03		1.90E+00	0%
Iron	2.10E+00	1.10E-02		2.10E+00	1%	4.90E+00	3.20E-02		4.90E+00	1%
Manganese	4.90E+00	2.60E-02		5.00E+00	2%	1.20E+01	7.60E-02		1.20E+01	2%
Nickel	7.50E-02	7.80E-05		7.50E-02	0.03%	3.20E-01	4.20E-04		3.20E-01	0.05%
Selenium	1.00E-01	5.40E-04		1.00E-01	0.04%	2.40E-01	1.60E-03		2.40E-01	0.04%
Vanadium	1.80E-01	9.10E-04		1.80E-01	0.10%	4.10E-01	2.70E-03		4.10E-01	0.10%
Cyanide	8.60E-02	4.50E-04		8.70E-02	0.03%	2.00E-01	1.30E-03		2.00E-01	0.03%
Subtotal Metals	**3.60E+01**	**1.80E-01**		**3.60E+01**	**14%**	**9.00E+01**	**5.90E-01**		**9.10E+01**	**15%**
Pesticides/PCBs										
4,4'-DDT	9.90E-03	1.10E-01		1.20E-01	0.05%	2.30E-02	2.50E-01		2.80E-01	0.04%
Aldrin	3.70E-01	3.30E-02		4.00E-01	0.20%	8.60E-01	7.50E-02		9.40E-01	0.10%
alpha-Chlordane	1.80E-02	3.80E-02		5.60E-02	0.02%	6.50E-01	1.30E+00		1.90E+00	0.31%
Dieldrin	5.10E-01	3.50E-01		8.50E-01	0.30%	1.20E+00	7.80E-01		2.00E+00	0.30%
Endrin	5.90E-02	4.10E-02		1.00E-01	0.04%	1.40E-01	9.10E-02		2.30E-01	0.04%
gamma-Chlordane	1.40E-02	2.80E-02		4.20E-02	0%	4.80E-01	9.60E-01		1.40E+00	0%
Heptachlor	1.00E-01	4.70E-02		1.50E-01	0%	2.40E-01	1.10E-01		3.40E-01	0%
Heptachlor epoxide	2.50E-01	3.90E-01		6.40E-01	0.20%	5.90E-01	8.70E-01		1.50E+00	0.20%
Methoxychlor	1.60E-01	3.90E-01		5.50E-01	0%	3.80E-01	8.70E-01		1.30E+00	0%
Aroclor-1260	1.30E+00	4.70E+01		4.80E+01	18%	3.10E+00	1.00E+02		1.10E+02	17%
Subtotal Pesticides/PCBs	**2.90E+00**	**4.80E+01**		**5.10E+01**	**19%**	**7.80E+00**	**1.10E+02**		**1.20E+02**	**19%**
SVOCs/VOCs										
1,4-Dioxane (p-dioxane)	2.10E-01	7.60E-04		2.10E-01	0.10%	5.00E-01	1.80E-03		5.00E-01	0.10%
2,4,6-Trichlorophenol	2.00E-01	1.50E-01		3.50E-01	0.10%	4.60E-01	3.40E-01		7.90E-01	0.10%
2,4-Dimethylphenol	1.10E-01	1.60E-02		1.20E-01	0.05%	2.50E-01	3.60E-02		2.90E-01	0.05%
2-Methylnaphthalene	1.50E+00	2.10E+00		3.70E+00	1.40%	3.60E+00	4.80E+00		8.40E+00	1.30%
2-Methylphenol	6.70E-02	6.40E-03		7.40E-02	0.03%	1.60E-01	1.40E-02		1.70E-01	0.03%
3,4-methylphenol	4.60E+00	4.40E-01		5.00E+00	1.90%	1.10E+01	9.80E-01		1.20E+01	1.90%
4-Methylphenol	1.10E+00	1.00E-01		1.20E+00	0.40%	2.50E+00	2.30E-01		2.70E+00	0.40%
bis(2-Ethylhexyl)phthalate	2.30E-02	4.40E-02		6.70E-02	0.03%	5.40E-02	9.90E-02		1.50E-01	0.02%
Hexachloroethane	2.70E-02	2.30E-02		5.10E-02	0.02%	6.40E-02	5.20E-02		1.20E-01	0.02%
Naphthalene	1.90E-01	1.20E-01	2.20E+01	2.20E+01	8%	4.40E-01	2.80E-01	5.10E+01	5.20E+01	8%
Nitrobenzene	2.70E-02	2.00E-03	1.10E-01	1.40E-01	0.10%	6.40E-02	4.50E-03	2.50E-01	3.20E-01	0.10%

Table 3-3
Noncancer Risk Results Detailed Summary for Risk Drivers - Future Adult/Child Resident - Groundwater *(continued)*
AMCO Chemical Superfund Site Oakland, California

Non-Carcinogenic Effects Risk Results - Hazard Quotients										
	Future Residential									
	Adult Resident					Child Resident				
	Reasonable Maximum Exposure									
Chemical of Potential Concern	**Ingestion**	**Dermal**	**Inhalation**	**Total**	**% Contribution**	**Ingestion**	**Dermal**	**Inhalation**	**Total**	**% Contribution**
Pentachlorophenol	1.00E-02	1.20E-01		1.30E-01	0.05%	7.20E-01	8.30E+00		9.10E+00	1.44%
1,1,2,2-Tetrachloroethane	8.80E-02	1.10E-02	2.90E-02	1.30E-01	0.00%	2.10E-01	2.50E-02	6.90E-02	3.00E-01	0.00%
1,1,2-Trichloroethane	9.10E-02	8.50E-03		1.00E-01	0.00%	2.10E-01	1.90E-02		2.30E-01	0.00%
1,1-Dichloroethane	7.60E-02	5.90E-03		8.20E-02	0.00%	1.80E-01	1.40E-02		1.90E-01	0.00%
1,1-Dichloroethene	2.30E-02	3.10E-03	2.80E-01	3.10E-01	0.10%	5.30E-02	7.30E-03	6.70E-01	7.30E-01	0.10%
1,2,4-Trichlorobenzene	4.10E-02	5.40E-02	3.60E+00	3.70E+00	1.40%	9.60E-02	1.20E-01	8.50E+00	8.70E+00	1.40%
1,2,4-Trimethylbenzene	1.10E+00	1.20E+00		2.30E+00	1%	2.50E+00	2.70E+00		5.30E+00	1%
1,2-Dibromo-3-chloropropane	3.30E-01	6.30E-02	5.70E+00	6.10E+00	2%	7.70E-01	1.40E-01	1.40E+01	1.40E+01	2%
1,2-Dichlorobenzene	2.20E-01	1.50E-01	1.80E+00	2.10E+00	0.80%	5.20E-01	3.30E-01	4.10E+00	5.00E+00	0.80%
1,2-Dichloropropane	1.60E-03	1.50E-04	6.10E-01	6.10E-01	0.20%	3.60E-03	3.50E-04	1.40E+00	1.40E+00	0.20%
1,3,5-Trimethylbenzene	3.00E-01	2.40E-01		5.50E-01	0%	7.00E-01	5.50E-01		1.30E+00	0%
1,4-Dichlorobenzene	8.50E-02	5.70E-02	1.30E-01	2.70E-01	0.10%	2.00E-01	1.30E-01	3.10E-01	6.30E-01	0.10%
2-Hexanone	1.30E-01	5.40E-03	3.70E-01	5.10E-01	0%	3.00E-01	1.20E-02	8.90E-01	1.20E+00	0%
Benzene	2.70E+00	4.20E-01	6.40E+00	9.50E+00	4%	6.40E+00	9.90E-01	1.50E+01	2.20E+01	4%
Chlorobenzene	9.20E-01	3.30E-01	6.40E+00	7.70E+00	3%	2.20E+00	7.40E-01	1.50E+01	1.80E+01	3%
cis-1,2-Dichloroethene	3.80E+01	4.70E+00		4.20E+01	16%	8.80E+01	1.10E+01		9.90E+01	16%
cis-1,3-Dichloropropene	3.80E-03	2.10E-04	1.00E-01	1.00E-01	0.04%	8.90E-03	4.70E-04	2.40E-01	2.50E-01	0.04%
Ethylbenzene	1.20E-01	7.30E-02	2.10E-01	4.10E-01	0.20%	2.90E-01	1.70E-01	5.10E-01	9.60E-01	0.20%
Isopropylbenzene (cumene)	7.40E-03	8.70E-03	3.20E-02	4.80E-02	0.02%	1.70E-02	1.90E-02	7.60E-02	1.10E-01	0.02%
Methyl ethyl ketone	2.00E-02	1.80E-04	4.10E-02	6.10E-02	0.02%	4.60E-02	4.40E-04	9.70E-02	1.40E-01	0.02%
Methyl isobutyl ketone	1.70E+00	5.20E-02	7.70E-01	2.50E+00	1.00%	3.90E+00	1.20E-01	1.80E+00	5.80E+00	0.93%
tert-Butyl alcohol	3.20E-02		6.10E+00	6.20E+00	2%	7.50E-02		1.40E+01	1.50E+01	2%
Tetrachloroethene	3.30E-02	1.90E-02	1.60E-01	2.20E-01	0.08%	7.70E-02	4.40E-02	3.90E-01	5.10E-01	0.08%
Toluene	2.10E+00	7.20E-01	9.70E+00	1.30E+01	5%	4.90E+00	1.70E+00	2.30E+01	3.00E+01	5%
trans-1,2-Dichloroethene	5.50E-01	4.90E-02	3.20E+00	3.80E+00	1.40%	1.30E+00	1.10E-01	7.50E+00	8.90E+00	1.42%
trans-1,3-Dichloropropene	3.70E-03	2.00E-04	9.80E-02	1.00E-01	0.04%	8.70E-03	4.50E-04	2.30E-01	2.40E-01	0.04%
Trichloroethene	5.20E+00	8.90E-01	7.80E-01	6.90E+00	3%	1.20E+01	2.00E+00	1.80E+00	1.60E+01	3%
Vinyl chloride	1.50E+01	7.90E-01	7.80E+00	2.30E+01	9%	3.50E+01	1.90E+00	1.80E+01	5.50E+01	9%
m,p-Xylenes	1.30E-01		6.40E-01	7.70E-01	0%	3.00E-01		1.50E+00	1.80E+00	0%
o-Xylene	6.10E-02	5.20E-02	3.00E-01	4.20E-01	0.20%	1.40E-01	1.20E-01	7.20E-01	9.80E-01	0.20%
Xylenes, total	2.20E-01	1.40E-01	7.60E+00	8.00E+00	3%	5.10E-01	3.30E-01	1.80E+01	1.90E+01	3%
Subtotal SVOCs/VOCs	**7.70E+01**	**1.30E+01**	**8.50E+01**	**1.80E+02**	**67%**	**1.80E+02**	**3.80E+01**	**2.00E+02**	**4.20E+02**	**67%**
Total:	**1.20E+02**	**6.20E+01**	**8.50E+01**	**2.62E+02**		**2.80E+02**	**1.50E+02**	**2.00E+02**	**6.28E+02**	

Total Estimated Hazard Index Across All Exposure Routes: **262** **628**

Notes

Subtotals and Total: Cumulative Hazard Index of all chemicals evaluated is summed.

% Contribution (Subtotal % Contribution) = Percent contribution of total hazard index for all chemicals evaluated.

References

Groundwater Exposure Parameters and Methods:

EPA, 1989: Risk Assessment Guidance for Superfund (RAGS) Volume 1 Human Health Evaluation Manual. Part A.

EPA, 1997: Exposure Factors Handbook. Volume 1, General Factors. August.

EPA, 2004a. RAGS Part E, Supplemental Guidance for Dermal Risk Assessment.

EPA, 2004b. User's Guide and Background Technical Document for Preliminary Remediation Goals Table Region 9. October.

Toxicity Values:

EPA, 2010: Integrated Risk Information System.

OEHHA, 2010: California Office of Environmental Health Hazard Assessment. Toxicity Criteria Database.

OEHHA, 2007: California Office of Environmental Health Hazard Assessment. Child Reference Dose.

Table 3-4

Indoor Air Sampling from Warehouse/Office, Outdoor Air and Environmental Screening Levels

AMCO Chemical Superfund Site
Oakland, California

Contaminant	RSL		Outdoor Air ($\mu g/m^3$)	Warehouse		Office			
	($\mu g/m^3$)	($\mu g/m^3$)		Breathing Zone Sample ($\mu g/m^3$)	Pathway Sample ($\mu g/m^3$)	Breathing Zone Sample ($\mu g/m^3$)	Breathing Zone Sample ($\mu g/m^3$)	Pathway Sample ($\mu g/m^3$)	Pathway Sample ($\mu g/m^3$)
Sample ID #	Residential	Commercial	OA-01	IA-04	IA-05	IA-02	IA-03	IA-06	IA-07
1,1-Dichloroethene	21	88	ND	ND	ND	ND	ND	ND	ND
1,1-Dichloroethane	1.8	7.7	ND	ND	ND	0.22 (C1, J)	0.52 (C1, J)	ND	**4.2** (C1, J)
cis-1,2-Dichloroethene	NA	NA	0.62 (C1, J)	ND	0.39	1.0	0.97	0.46	26
Chloroform	0.12	0.53	ND	ND	ND	0.19 (C1, J)	0.19 (C1, J)	ND	**0.25** (J, C1)
1,1,1-Trichloroethane	520	2200	ND	ND	ND	ND	ND	ND	0.99
Benzene	0.36	1.6	1.8	0.49	0.52	0.48	0.50	0.47	0.24
Trichloroethene	0.21	0.88	ND	0.54	1.3	0.48	0.85	0.65	**6.4** (C1, J)
Tetrachloroethene	4.2	18	ND	ND	ND	0.72 (J, Q2)	0.72 (J, Q2)	0.27 (C1, J, Q2)	**11**
1,1,2-Trichloro-1,2,2-trifluoroethane	3100	13000	0.96 (C1, J)	0.48 (J, C1)	0.51 (J, C1)	0.52 (C1, J)	0.52 (C1, J)	0.48 (C1, J)	0.49 (C1, J)
Vinyl chloride	0.17	2.8	ND	ND	ND	ND	ND	ND	ND

NOTES:

Bold numbers indicates concentrations exceeding residential screening values

Compared to RSL Levels: Target Carcinogenic Target Risk (TR) = 1E-06; Noncancer Hazard Index (HI) = 0.1

Letters following concentrations are qualifiers:

(C1) The reported concentration for this analyte is below the quantitation limit

(J) The reported result for this analyte should be considered an estimated value

(Q2) The laboratory control standard associated with this sample did not meet recovery criteria for this analyte results for this batch in QC summary.

ND Non-detect

RSL Regional Screening Levels, EPA

Source: EPA, Region 9, Lynn Suer

Table 5-1
Removal Action Objectives
AMCO Chemical Superfund Site Oakland, California

	Groundwater				Soil				
Contaminant of Concern	**Removal Action Objective (ug/L)**	**Maximum Concentration Detected in Site Groundwater (ug/L) (2006 and 2012 Groundwater Monitoring)**	**Sample Location**	**Ratio of Maximum Concentration / RAO**	**Removal Action Objective (ug/kg)**	**Maximum Concentration Detected in Site Soils (From RI Addendum) (ug/kg)**	**Soil Boring ID**	**Sample Depth (top of sample interval)**	**Ratio of Maximum Concentration / RAO**
Trichloroethene	**130**	**5000***	**MIP-8**	**38.5**	**460**	**5,600,000**	**SC-019**	**10**	**12,109**
Vinyl chloride	**1.8**	**15,000**	**RMW-02-32**	**8,333**	**32**	**16,000**	**SC-042**	**8**	**500**
cis-1,2-Dichloroethene	**3,100**	**66,000**	**MW-12**	**21.3**	**190**	**1,400,000**	**SC-021**	**1**	**7,368**
1,2-Dichloroethane	**100**	**38**	**RMW-02-13**	**0.38**	**4.5**	**20,000**	**SC-053**	**5**	**4,444**
Tetrachloroethene	**63**	**33**	**RMW-07-35**	**0.5238**	**550**	**740,000**	**SC-053**	**5**	**1,345**
Toluene	**95,000**	**24,000**	**MW-12**	**0.2526**	**2,900**	**2,600,000**	**SC-021**	**1**	**897**
Xylenes, total	**37,000**	**3,200**	**RMW-02-13**	**0.0865**	**2,300**	**970,000**	**SC-029**	**5**	**422**
1,2,4-Trimethylbenzene	**7300**	**990**	**RMW-02-32**	**0.1356**	**1,500**	**600,000**	**SC-055**	**2**	**400**
Benzene	**27**	**340**	**RMW-02-13**	**12.6**	**44**	**15,000**	**SC-021**	**3**	**340.9**
1,1-Dichloroethane	**N/A**	**2,300**	**MW-12**	**N/A**	**200**	**49,000**	**SC-021**	**3**	**245**
1,4-Dichlorobenzene	**180**	**990**	**RMW-02-32**	**5.5**	**590**	**140,000**	**SC-061**	**3**	**237.3**
1,2-Dichlorobenzene	**190**	**5,700**	**RMW-02-32**	**30.0**	**1,100**	**250,000**	**SC-040**	**8**	**227.3**
Methylene chloride	**2,600**	**140**	**RMW-02-32**	**0.0538**	**77**	**16,000**	**SC-037**	**3**	**208**
Chlorobenzene	**N/A**	**1,400**	**RMW-02-32**	**N/A**	**1,500**	**250,000**	**SC-061**	**3**	**166.7**
1,1,1-Trichloroethane	**720,000**	**850**	**MW-12**	**0.0012**	**7,800**	**1,200,000**	**SC-019**	**10**	**154**
Ethylbenzene	**310**	**670**	**RMW-02-13**	**2.2**	**3,300**	**260,000**	**SC-029**	**5**	**78.8**
trans-1,2-Dichloroethene	**14,000**	**730**	**MW-12**	**0.0521**	**670**	**14,000**	**SC-021**	**1**	**20.9**
Acetone	**130,000,000**	**9,700**	**MW-12**	**0.0001**	**500**	**9,400**	**SC-014**	**13**	**18.8**
1,2,4-Trichlorobenzene	**7,300**	**48**	**RMW-02-32**	**0.0066**	**1,500**	**12,000**	**SC-048**	**1**	**8.0**
tert-Butyl Alcohol	**N/A**	**820**	**RMW-10-35**	**N/A**	**75**	**140**	**SC-023**	**20**	**1.9**
Chloroethane	2,300,000	390	RMW-02-32	N/A	1,100	730	SC-045	0	N/A
1,2-Dibromo-3-chloropropane	N/A	0.59	RMW-05-15	N/A	5	Not Detected	--	--	N/A
1,2-Dichloropropane	140	5	MW-12	N/A	120	Not Detected	--	--	N/A
trans-1,3-Dichloropropene	26	2	RMW-14-50	N/A	59	Not Detected	--	--	N/A
2-Hexanone	N/A	190	RMW-02-13	N/A	N/A	Not Detected	--	--	N/A
4-Methyl-2-pentanone (MIBK)	N/A	49,000	RMW-02-32	N/A	N/A	100,000	SC-016	13	N/A
Methyl tert-Butyl Ether (MTBE)	9,900	32	RMW-02-13	N/A	23	43	SC-052	3	N/A
Isopropylbenzene (Cumene)	N/A	450	RMW-02-32	N/A	N/A	58,000	SC-053	5	N/A
1,2,3-Trichlorobenzene	N/A	9	RMW-02-13	N/A	N/A	6,400	SC-048	1	N/A
1,1,2-Trichloroethane	N/A	13	RMW-02-13	N/A	70	Not Detected	--	--	N/A
1,1,2,2-Tetrachloroethane	N/A	18	RMW-02-13	N/A	18	Not Detected	--	--	N/A
1,3,5-Trimethylbenzene	N/A	2,500	RMW-02-32	N/A	N/A	240,000	SC-055	2	N/A

NOTES:

* MIP hydropunch

Groundwater RAO: SFRWQCB Groundwater Screening Levels for Vapor Intrusion (Residential, potential drinking)

Soil RAO: SFRWQCB Soil ESL (Residential, potential drinking)

N/A: Compound not included in table or no value listed

Compounds listed in bold text are Primary COCs for NTCRA (one or more detections above RAO)

Table 6-1
Cost Summary
Alternative 2 - Excavation and Offsite Disposal
AMCO Chemical Superfund Site
Oakland, California

Construction Labor Cost:	$449,005
Material Cost:	$121,600
Construction Subcontractor Cost:	$5,259,744
Disposal Cost:	$14,341,836
Transportation Cost:	$4,710,420
Other Direct Costs:	$4,290
TOTAL CONSTRUCTION CAPITAL COST (Less Contingency):	$24,886,895
TOTAL CONTINGENCY COST:	$2,488,689
TOTAL CONSTRUCTION CAPITAL COST (With Contingency):	$27,375,584
TOTAL CONSTRUCTION COST EXCLUDING WASTE T&D:	$8,323,328
Project Management (5%):	$416,166
Remedial Design (8%):	$665,866
Construction Management (6%):	$499,400
TOTAL COST:	**$28,957,017**

Note: Project management, remedial design, and construction management costs are calculated as percent of the total construction capital cost excluding waste transportation and disposal.

Table 6-2
Cost Summary
Alternative 3 - Multi-Phase Extraction (MPE)
AMCO Chemical Superfund Site
Oakland, California

Total Construction Costs		
	Construction Labor Cost:	$2,399,100
	Material Cost:	$429,112
	Construction Subcontractor Cost:	$5,273,436
	Disposal Cost:	$344,634
	Transportation Cost:	$46,463
	Other Direct Costs:	$56,100
TOTAL CONSTRUCTION CAPITAL COST (Less Contingency):		$8,548,846
TOTAL CONTINGENCY COST:		$854,885
TOTAL CONSTRUCTION CAPITAL COST (With Contingency):		$9,403,731
Project Management (5%):		$470,187
Remedial Design (8%):		$752,298
Construction Management (6%):		$564,224
	TOTAL CONSTRUCTION COST:	**$11,190,440**
Total O&M Costs		
	O&M Labor Cost:	$44,430
	O&M Subcontractor Cost:	$7,422
	O&M Material Cost:	$6,570
	O&M Disposal Cost:	$973
	O&M Transportation Cost:	$3,893
TOTAL O&M CAPITAL COST (Less Contingency):		$63,289
TOTAL CONTINGENCY COST:		$6,329
TOTAL O&M CAPITAL COST (With Contingency):		$69,617
Technical Support (10%)		$6,962
	TOTAL O&M COST:	$69,617
TOTAL COSTS		
TOTAL CONSTRUCTION COST:		$11,190,440
TOTAL O&M COST:		$58,640
	TOTAL COST:	**$11,249,080**

Table 6-3
Cost Summary
Alternative 4 - In-Situ Thermal Heating (ISH)
AMCO Chemical Superfund Site
Oakland, California

Total Construction Costs	
Construction Labor Cost:	$632,972
Material Cost:	$550,768
Construction Subcontractor Cost:	$4,905,217
Disposal Cost:	$293,359
Transportation Cost:	$77,367
Other Direct Costs:	$5,940
TOTAL CONSTRUCTION CAPITAL COST (Less Contingency):	$6,465,623
TOTAL CONTINGENCY COST:	$646,562
TOTAL CONSTRUCTION CAPITAL COST (With Contingency):	$7,112,185
Project Management (5%):	$355,609
Remedial Design (8%):	$568,975
Construction Management (6%):	$426,731
TOTAL CONSTRUCTION COST:	**$8,463,500**

Total O&M Costs	
Total O&M Labor Cost:	$37,979
Total O&M Subcontractor Cost	$6,344
Total O&M Material Cost:	$4,826
Total O&M Disposal Cost:	$832
Total O&M Transportation Cost:	$3,328
TOTAL O&M CAPITAL COST (Less Contingency):	$53,309
TOTAL CONTINGENCY COST:	$5,331
TOTAL O&M CAPITAL COST (With Contingency):	$58,640
Technical Support (10%)	$5,864
TOTAL O&M COST:	$58,640

TOTAL COSTS	
TOTAL CONSTRUCTION COST:	$8,463,500
TOTAL O&M COST:	$58,640
TOTAL COST:	**$8,522,140**

Table 6-4
Cost Summary
Alternative 5 – Product Recovery with Enhanced In-Situ Bioremediation
AMCO Chemical Superfund Site
Oakland, California

Total Construction Costs	
Construction Labor Cost:	$2,789,748
Material Cost:	$1,227,043
Construction Subcontractor Cost:	$1,545,810
Disposal Cost:	$286,898
Transportation Cost:	$84,447
Other Direct Costs:	$5,940
TOTAL CONSTRUCTION CAPITAL COST (Less Contingency):	$5,939,886
TOTAL CONTINGENCY COST:	$593,989
TOTAL CONSTRUCTION CAPITAL COST (With Contingency):	$6,533,875
Project Management (5%):	$326,694
Remedial Design (8%):	$522,710
Construction Management (6%):	$392,032
TOTAL CONSTRUCTION COST:	**$7,775,311**

Total O&M Costs	
O&M Labor Cost:	$88,929
O&M Subcontractor Cost:	$19,807
O&M Material Cost:	$15,829
O&M Disposal Cost:	$1,948
O&M Transportation Cost:	$7,793
TOTAL O&M CAPITAL COST (Less Contingency):	$134,305
TOTAL CONTINGENCY COST:	$13,430
TOTAL O&M CAPITAL COST (With Contingency):	$13,430
Technical Support (10%)	$14,774
TOTAL O&M COST:	**$147,735**

TOTAL COSTS	
TOTAL CONSTRUCTION COST:	$7,775,311
TOTAL O&M COST:	$58,640
TOTAL COST:	**$7,833,951**

Table 6-5
Alternative 6 - Air Sparging with Soil Vapor Extraction (AS/SVE)
Cost Summary
AMCO Chemical Superfund Site
Oakland, California

Total Construction Costs	
Construction Labor Cost:	$3,924,470
Material Cost:	$511,429
Construction Subcontractor Cost:	$4,533,555
Disposal Cost:	$290,531
Transportation Cost:	$123,863
Other Direct Costs:	$60,060
TOTAL CONSTRUCTION CAPITAL COST (Less Contingency):	$9,443,909
TOTAL CONTINGENCY COST:	$944,391
TOTAL CONSTRUCTION CAPITAL COST (With Contingency):	$10,388,300
Project Management (5%):	$519,415
Remedial Design (8%):	$831,064
Construction Management (6%):	$623,298
TOTAL CONSTRUCTION COST:	**$12,362,077**

Total O&M Costs	
O&M Labor Cost:	$48,056
O&M Subcontractor Cost:	$8,027
O&M Material Cost:	$8,554
O&M Disposal Cost:	$1,053
O&M Transportation Cost:	$4,211
TOTAL O&M CAPITAL COST (Less Contingency):	$69,900
TOTAL CONTINGENCY COST:	$6,990
TOTAL O&M CAPITAL COST (With Contingency):	$76,890
Technical Support (10%)	$7,689
TOTAL O&M COST:	$76,890

TOTAL COSTS	
TOTAL CONSTRUCTION COST:	$12,362,077
TOTAL O&M COST:	$58,640
TOTAL COST:	**$12,420,716**

Table 7-1
Evaluation of Removal Action Alternatives – *Conceptual Design, Assumptions, and Effectiveness*

AMCO Chemical Superfund Site Oakland, California

			EFFECTIVENESS				
Alternative No./ Technology	**Conceptual Design**	**Assumptions**	**Overall Protection of Public Health and the Environment**	**Ability to Achieve RAOs**	**Long-Term Effectiveness and Permanence**	**Reduction of Toxicity, Mobility, Volume Through Treatment**	**Short-Term Effectiveness**
1. No Action	N/A	N/A	POOR	POOR	POOR	N/A	POOR
2. Excavation and Offsite Disposal	Removal and offsite disposal of approximately 11,600 cubic yards of contaminated soil and LNAPL. Shoring or sheet piling needed for structural integrity of sidewalls and protection of adjacent utilities, roads and structures. Initial dewatering for approximately 600,000 gallons of contaminated groundwater and LNAPL (estimated volume present within excavation area). Dewatering will continue as necessary during excavation, but would be minimized by the sheet piling if placed on all sides. Extracted groundwater would be hauled offsite for treatment and disposal. To prevent fugitive VOC emissions and dust from impacting the surrounding neighborhood, a tented enclosure would be installed over the excavation area. The tent would be vented with negative pressure and the air would be treated with granular activated carbon air. Four groundwater monitoring wells would be installed within the excavation footprint to monitor groundwater contamination levels following excavation.	Excavation of VOC source areas as depicted in **Figure 6-1,** assumes that excavation technically feasible with engineering controls and that excavation is geotechnically feasible. An engineering feasibility study would be required during the remedial design phase to design the necessary shoring and to select equipment for suitable for conducting work in the limited space.	MODERATE. Pros: Immediate and permanent removal of contaminants from the treatment area within a short timeframe, greatly reducing health risks to the community in the long term	POOR TO MODERATE. Pros: Excavation will remove nearly all LNAPL, vapor phase, dissolved phase, and adsorbed phase contamination from within the excavation footprint.	POOR TO MODERATE. Pros: Removes considerable mass within the source area from both vadose and saturated zones.	MODERATE TO GOOD. Pros: Significant reduction of contaminants within treatment zone will be achieved.	POOR. Pros: Relatively short duration.
			Cons: Excavation could pose significant potential exposure issues to the community during removal. Excavation is a transfer technology that would result in the disposal of 19,500 tons of waste at an offsite landfill. In addition, excavation may result in a significant energy footprint due to transportation depending on proximity to a certified landfill. Significant mass may be left in place under the warehouse/ office building.	Cons: Contamination will remain under the warehouse building at levels exceeding the RAOs and would continue to resent a vapor intrusion risk to occupants.	Cons: Transfers contaminants and associated liability to another facility. Dewatering may spread LNAPL and other contaminants into deeper 'clean' soil and recontaminate clean fill once dewatering ceases.	Cons: VOCs in areas adjacent to the excavation (warehouse/ office) will likely recontaminate the treated area after dewatering is ceased. Dewatering may spread contamination, including mobile LNAPL, to deeper zones.	Cons: Significant impacts to neighborhood via potential for fugitive VOCs, dust, noise, traffic vibrations, and emissions, associated with the excavation and trucking of hazardous material and potential for worker exposure during removal. **Removal action Timeframe: 3 Months**
3. Multi-Phase Extraction (MPE)	32 multi-phase extraction (MPE) wells connected to positive displacement blower(s) for vapor recovery and fitted with top loading pneumatic pumps for total liquid recovery. Liquid treatment will consist of a product separator, an air stripper, and followed by two granular activated carbon vessels prior to discharge to the sanitary sewer. Soil vapor treatment consisting of knockout tank, GEO C3 vapor treatment system with granular activated carbon vessels. Condensate chemicals and LNAPL would be stored on-site in a dual-walled above grade storage tank prior to disposal and treatment off-site. Eight groundwater monitoring wells would be installed to monitor the progress of the removal action.	Five years of DPE operations required to reach asymptotic levels. The EE/CA assumes MPE wells spaced 25 feet apart in the treatment area and a groundwater flow rate of 10 to 20 gpm is estimated. In addition, a pilot study or review of prior MPE operating data is recommended to determine MPE well spacing and water treatment design. The EE/CA assumes EBMUD (the POTW) will allow discharge of treated water with 1,4-dioxane concentrations. Current EBMUD discharge limits do not include limitations on 1,4-dioxane.The EPA will be required to comply with EBMUD permit requirements.	MODERATE. Pros: Proven and reliable technology that will reduce health risks by treating the vadose zone and shallow saturated zone. The main advantage of MPE is that it lowers the water table, thus "creating" a thicker vadose zone to allow air flow through the existing highly impacted shallow capillary fringe area and shallow groundwater zone.	MODERATE. Pros: MPE will remove considerable vapor phase mass from the vadose zone, mobile LNAPL from the groundwater interface, and dissolved phase VOCs from shallow groundwater.	MODERATE. Pros: Removes considerable VOC mass in the vadose and shallow saturated zone reducing vapor risks permanently.	MODERATE. Pros: MPE will remove mobile LNAPL and considerable VOC mass from the vadose and saturated zone and reduce mobility, toxicity, and volume of contaminant mass.	GOOD. Pros: MPE will immediately address vapor risk at the site
			Cons: Will leave VOC-laden residual LNAPL in the shallow soil and saturated zone and be limited in treating at depths below de-watering elevation, would need a polishing technology to treat VOC-laden residual LNAPL. MPE is a transfer technology in that the contaminant mass will ultimately be treated and disposed offsite. However, considerably less volume of material will be transported offsite relative to excavation, as it will be stripped from the soil/groundwater and consolidated prior to removal. Technology is somewhat energy intensive, but less than ISH.	Cons: MPE will leave residual VOC-laden LNAPL at the groundwater interface, as well as dissolved phase VOCs in deep groundwater. Contamination will likely remain above RAOs in shallow soil and deep groundwater.	Cons: No guarantee that the majority of LNAPL mass will be removed. MPE is not equally effective across the treatment area. Deeper zones which do not get dewatered will not be treated as effectively as shallow zones. Technology will leave residual VOC-laden LNAPL in fine grain sediment and adsorbed-phase VOCs in the deeper saturated zone contributing to groundwater contamination once system turned off.	Cons: Residual VOC-laden LNAPL and adsorbed-phase contamination will remain if no polishing technology implemented.	Cons: Relatively long treatment duration, approximately 5 years is estimated for cumulative mass removal to reach asymptotic levels. **Removal action Timeframe: 5 Years.**

Table 7-1
Evaluation of Removal Action Alternatives – *Conceptual Design, Assumptions, and Effectiveness (continued)*
AMCO Chemical Superfund Site Oakland, California

			EFFECTIVENESS				
Alternative No./ Technology	**Conceptual Design**	**Assumptions**	**Overall Protection of Public Health and the Environment**	**Ability to Achieve RAOs**	**Long-Term Effectiveness and Permanence**	**Reduction of Toxicity, Mobility, Volume Through Treatment**	**Short-Term Effectiveness**
4. In-Situ Thermal Heating	70 electrodes, 52 MPE wells, and 24 monitoring points for measuring temperature, pressure, and vapor concentrations. Soil vapor treatment consisting of a condenser, knockout tank, and GEO C3 Technology vapor treatment system with granular activated carbon vessels. Condensate chemicals and free product to be stored on-site in a dual-walled above grade storage tank prior to disposal off-site. Water will be extracted from MPE wells to ensure hydraulic containment as well as provide water for injection at electrodes to prevent overheating, maintain electrical conductivity with soil, and provide groundwater mixing to aid convective heat transfer. Extracted groundwater will be treated with an air stripper and granular activated carbon prior to being reinjected into the electrodes. Excess groundwater not required for reinjection as well as cooling tower water will be discharged into the sanitary sewer. Three existing groundwater monitoring wells to be replaced and eight new groundwater monitoring wells would be installed to monitor the progress of the removal action.	6 months of heating required to remove majority of source mass (cumulative mass recovery at asymptotic levels). Injection/recirculation of steam condensate approved by the SFRWQCB. Bench scale study confirms feasibility and confirms design of electrode and extraction well spacing. Pilot testing is not necessary. Due to shallow groundwater table, the existing concrete surface would be removed and the site ground surface would be sealed with an insulating concrete cap to ensure vapor capture, prevent short circuiting and provide insulation. Assumed that EBMUD (the POTW) will allow discharge of treated water with 1,4-dioxane concentrations. Current EBMUD discharge limits do not include limitations on 1,4-dioxane.The EPA will be required to comply with EBMUD permit requirements.	GOOD Pros: Proven and reliable technology that should considerably reduce health risks to the community and local environment by treating the vadose zone and saturated zone within a rapid timeframe and immediately reduce vapor risks upon start-up. More effective than MPE alone (Alternative 3) as very little VOC mass will be left after treatment. ISH is the best available technology for quickly and effectively removing VOCs in the subsurface.	GOOD TO EXCELLENT Pros: Removes LNAPL from the groundwater interface as well as vapor phase, dissolved phase, and adsorbed phase VOCs from all depths within the entire treatment area. Concentration reductions in excess of 98% are commonly achieved with ISH, indicating that RAOs are likely to be reached for the majority of the Site VOCs. After shutdown, subsurface temperatures will remain high, stimulating thermophillic biodegradation.	GOOD Pros: Removes considerable mass resulting in greatly diminished contaminant flux to soil vapor and the downgradient dissolved phase plume, may also stimulate microbial activity for additional effectiveness once active heating has ceased.	GOOD TO EXCELLENT Pros: More efficient removal of VOCs and LNAPL can be achieved with ISH over any other technology. High probability of success based on site inputs and similar case histories.	GOOD. Pros: Once infrastructure is built, system can be operated with minimal disruption to community or adjacent properties and immediate reduction of vapor intrusion concerns will be achieved when the vacuum is applied to the subsurface upon start-up. General removal action timeframe is much shorter than any other technology, except for excavation.
			Cons: ISH is a transfer technology in that the contaminant mass will ultimately be treated and disposed offsite. However, considerably less volume of material will be transported offsite as it will be stripped from the soil/groundwater and consolidated prior to removal. Technology is energy intensive in the short term. If complete source area is not heated, adjacent source material may re-contaminate the treated zone once system is turned off ("donut hole effect"). Monitoring and engineering controls would be required to ensure that LNAPL is not spread to new areas and VOCs are not emitted to the surface.	Cons: RAOs for cis-1,2-dichloroethene and vinyl chloride may not be achieved during heating. However, removing the LNAPL source material will prevent further VOC flux into the groundwater, likely allowing the remaining contamination to attenuate naturally.	Cons: May require follow-up polishing technology, such as EISB to further reduce VOCs.	Cons: Non-treated adjacent source areas may re-contaminant treated areas.	Cons: Noise, dust and traffic impacts will be associated with construction activities. **Removal action Timeframe: 6 Months**

Table 7-1
Evaluation of Removal Action Alternatives – *Conceptual Design, Assumptions, and Effectiveness (continued)*
AMCO Chemical Superfund Site Oakland, California

			EFFECTIVENESS				
Alternative No./ Technology	**Conceptual Design**	**Assumptions**	**Protection of Public Health and the Environment**	**Ability to Achieve RAOs**	**Long-Term Effectiveness and Permanence**	**Reduction of Toxicity, Mobility, Volume Through Treatment**	**Short-Term Effectiveness**
5. Free Product Removal Followed by Enhanced In Situ Bioremediation (EISB)	22 product recovery wells to be used as EISB injection/extraction wells following mobile LNAPL recovery. 25 EISB injection/extraction wells (47 EISB injection/extraction wells total). Product would be removed via down-well skimmers and routed to an above grade dual-walled storage tank. Enhanced in-situ bioremediation (EISB) would include an addition of sodium lactate and emulsified vegetable oil substrate via recirculation (for hydrogen donor) for chlorinated VOC treatment and sulfate recirculation (electron acceptor) for petroleum hydrocarbon treatment. Injection/extraction wells in the 45 feet treatment depth zone would be dual-nested. Eight groundwater monitoring would be installed to monitor the progress of the EISB treatment.	Three (3) years of product recovery. Five (5) years of chlorinated VOC biostimulation (recirculation and monitoring). Three (3) years of petroleum biostimulation. Pilot testing including NAPL transmissivity testing and aquifer testing is recommended to determine well spacing/construction design. Laboratory bench scale and field pilot testing is recommended prior to selecting substrates. Field pilot testing recommended to determine well spacing design.	POOR TO MODERATE	POOR	POOR TO MODERATE	MODERATE	POOR TO MODERATE.
			Pros: Removes majority of mobile LNAPL. Destroys dissolved phase VOCs in-situ with relatively low energy use compared to other alternatives.	Pros: Free product recovery and EISB will reduce free phase mass considerably.	Pros: EISB is expected to be highly effective at treating the saturated zone based on current site geochemistry.	Pros: Effective at saturated zone treatment, would reduce free phase mass considerably and destroy toxic VOCs in groundwater to non-toxic end products via in-situ treatment.	Pros: Majority of mobile LNAPL recovered within first three years of treatment.
			Cons: LNAPL removal effectiveness highly dependent on if the LNAPL is recoverable, (i.e., if it will flow into recovery wells from the formation). Treatment limited to saturated zone, vadose zone not treated directly. Biological destruction is a slow process; may take years to achieve measureable reduction in fluxes to soil vapor and groundwater. EISB technically limited by distribution factors, primarily fine grained units and soil heterogeneity. Onsite storage and offsite disposal of free product necessary and removal action duration much longer than most other alternatives. Monitoring and engineering controls would be required to ensure that LNAPL does not spread to new areas or surface during injections.	Cons: Product recovery will leave behind residual LNAPL, and EISB fails to address vadose zone contamination. RAOs are unlikely to be achieved for soil or groundwater.	Cons: Vadose zone will continue to act as a source to air and groundwater. Fine grained sediments and subsurface heterogeneity may lead to uneven treatment, VOCs will remain in the vadose and saturated zone and continue to release flux to air and groundwater	Cons: No treatment in vadose zone. Residual NAPL will not be totally removed and continue to contribute to soil vapor and groundwater toxicity until completed treatment by long term EISB is achieved. This technology will not result in immediate reductions to vapor risk.	Cons: Longer removal action timeframe than other alternatives. Vadose zone is not treated and this technology will not result in immediate reduction to vapor risk. No reduction in dissolved phase VOCs until after EISB phase is started. Free product would need to be stored onsite and hauled offsite. **Removal action Timeframe: 11 Years.**
6. Free Product Removal followed by Soil Vapor Extraction (SVE) and Air Sparging (AS) System	22 product recovery wells; mobile LNAPL will be removed via down-well skimmers and routed to an above grade dual-walled storage tank (same as #5 above). 17 horizontal vapor extraction wells and 74 air sparge wells. Air sparge wells located in deep areas will be dual nested. Soil vapor treatment consisting of knockout tank, G.E.O. C3 Technology vapor treatment system with granular activated carbon vessels. Condensate chemicals and recovered LNAPL to be stored on-site in a dual-walled above grade storage tank prior to disposal off-site. Eight groundwater monitoring would be installed to monitor the progress of the removal action.	Three (3) years of product recovery. Four (4) years of AS/SVE Operations required to achieve asymptotic conditions. Pilot testing including LNAPL transmissivity testing is recommended to determine well spacing/construction design. It may be necessary to remove the existing concrete surface to allow installation and appropriate function of the horizontal wells. Due to the shallow groundwater table, the ground surface will likely need to be sealed to ensure vapor capture and prevent short circuiting.	MODERATE	MODERATE	MODERATE	Moderate	POOR TO MODERATE.
			Pros: Removes majority of mobile LNAPL during product recovery phase. AS/SVE phase should remove significant VOCs from the saturated and vadose zone, treating the entire source zone and reducing vapor risks.	Pros: Removes majority of mobile LNAPL, as well as vapor phase and dissolved phase VOCs.	Pros: Methods should allow for entire source zone to be remediated (including beneath structures), reducing potential for significant rebound post shut-down.	Pros: Would remove mobile LNAPL and significantly reduce VOCs mass in soil and groundwater.	Pros: Majority of mobile LNAPL recovered within first three years of treatment. AS/SVE equally effective over the entire source zone.
			Cons: LNAPL removal effectiveness highly dependent on if the LNAPL is recoverable, (i.e., if it will flow into recovery wells from the surrounding formation). AS/SVE would leave VOCs in the shallow soil and groundwater. AS/SVE would not be as effective in treating the vadose zone compared to multi-phase extraction due to lower vacuum levels and physical limitations of a shallow vadose zone and the variable thickness and uneven surface of the concrete cap. AS/SVE tends to raise the groundwater table due to mounding caused by AS wells and the vacuum applied to the vadose zone by the SVE. Therefore, SVE air flow will only occur in the upper 5 feet or less of soils. If mobile LNAPL removal is not complete prior to AS/SVE (which is likely) engineering controls and monitoring would be required to ensure that LNAPL is not spread to new areas and VOC are not emitted to the surface. Unlikely to achieve low VOC levels without additional polishing step such as EISB. Recovered LNAPL would need to be stored onsite for offsite disposal. AS/SVE is a transfer technology in that the contaminant mass will ultimately be treated and disposed offsite. However, considerably less volume of material will be transported offsite relative to excavation, as it will be stripped from the soil/groundwater and consolidated prior to removal.	Cons: Residual VOC-laden LNAPL will be left at the groundwater interface after treatment, likely causing VOC concentrations to exceed RAOs in areas impacted by LNAPL. Pockets of VOCs above RAOs will likely remain trapped within fine grained sediments.	Cons: Fine grained sediments and subsurface heterogeneity may lead to uneven treatment, VOCs will remain in the vadose and saturated zone and continue to release flux to air and groundwater. Air sparging would significantly raise dissolved oxygen levels in Site groundwater. Because reductive dechlorination only occurs under anaerobic conditions, this could potentially have a negative effect on the natural biological activity currently slowing offsite migration of chlorinated VOCs and keeping the dissolved phase plume relatively stable.	Cons: Likely to leave VOCs in soil and groundwater which could continue to release VOC flux to air and groundwater.	Cons: Longer removal action timeframe than most other alternatives with the exception of EISB. Vapor risk would be reduced minimally during the initial three years of product recovery unless SVE is operated concurrently with free product recovery. No reduction of VOCs and vapor risk until AS/SVE begins. Free product would need to be stored onsite and hauled offsite causing potential exposure scenarios. **Removal action Timeframe: 7 Years.**

Table 7-2
Evaluation of Removal Action Alternatives – *Implementability and Costs*
AMCO Chemical Superfund Site Oakland, California

IMPLEMENTABILITY				Costs		
Alternative No./ Technology	**Technical Feasibility**	**Administrative Feasibility**	**Availability of Service and Materials**	**Total Construction Cost**	**Total O&M Cost**	**Total Cost**
1. No Action	N/A	N/A	N/A	N/A	N/A	
2. Excavation and Offsite Disposal	MODERATE TO GOOD.	POOR.	GOOD.	$28,957,017	$0	$28,957,017
	Pros: Proven, reliable and simple technology.	Pros: Widely accepted technology, with minimal permitting necessary. Can be completed within statutory timeframe.	Pros: Many good excavation contractors available in area.			
	Cons: Significant geotechnical and engineering aspects to be considered and mitigated.	Cons: High capital cost and the limited number of qualified disposal facilities within California approved for CERCLA hazardous waste. Long-term liability issues.	Cons: Specialty shoring and construction equipment may be needed due to site constraints.			
3. Multi-Phase Extraction (MPE)	MODERATE.	MODERATE.	MODERATE.	$11,190,440	$69,617	$11,249,080
	Pros: Reliable method to reduce source mass and VOC flux to air and shallow groundwater	Pros: Many other successful applications at similar sites, minimizing regulatory and permit condition issues.	Pros: Equipment specific to MPE is widely available from several different vendors. The vapor treatment vendor is located in Southern California, maintains inventory of available equipment that can be rapidly mobilized to the site.			
	Cons: Must be operated continuously to maintain hydraulic containment and depressed groundwater table, subject to operational issues (e.g. fouling, fatigue, etc.). Subject to short-circuiting in heterogeneous media (prior excavations, trenches) due to preferential air/water flow. Advanced oxidation water treatment technology required in the event 1,4 dioxane treatment is required by EBMUD. Residual LNAPL may remain. Less effective in the deeper saturated zone. The ground surface may need to be sealed to prevent short circuiting and optimize SVE effectiveness.	Cons: Project will significantly exceed statutory limits of 12 month treatment. Securing permit for treated water discharge may be hampered by presence of 1,4-dioxane.	Cons: Vapor treatment options are limited for air emission created by ex-situ thermal oxidation, greatly limiting off-gas treatment equipment and vendor options. Only 1 vapor treatment vendor has necessary technology for vapor treatment because the community will not allow ex-situ thermal treatment.			
4. In-Situ Thermal Heating	GOOD.	MODERATE TO GOOD	MODERATE	$8,463,500	$58,640	$8,522,140
	Pros: ISH has become reliable and proven technology over the last 10 years. Site conditions and geology are amenable to ISH, utility infrastructure and available space for equipment is ample. Treatment effective over entire source zone.	Pros: Short removal action timeframe. Several other applications of ISH completed in the area will help regulatory acceptance.	Pros: Reliable heating vendors exist in North America that can quickly mobilize and successfully implement ISH. The vapor treatment vendor is located in Southern California, maintains inventory of available equipment that can be rapidly mobilized to the site.			
	Cons: Limited number of vendors are available, especially with limitation on vapor treatment due to community concerns. High capital costs and energy use. Elevated security concerns due to heavy use of copper in well field. Existing cement cap/surface may need to be removed to allow for appropriate steam recovery. Due to shallow groundwater table, the surface will likely need to be sealed with an insulating concrete cap to ensure vapor capture, prevent short-circuiting, and provide insulation.	Cons: Significant infrastructure needed requiring building and safety permits and reliance of power companies to install necessary utility infrastructure may cause delays.	Cons: Only 4 ISH vendors exist in the U.S., and only 1 vapor treatment vendor has necessary technology for vapor treatment because the community will not allow ex-situ thermal treatment.			
5. Free Product Removal Followed by Enhanced In Situ Bioremediation (EISB)	MODERATE.	POOR TO MODERATE.	EXCELLENT.	$7,775,311	$147,735	$7,833,951
	Pros: Technologies are proven and many vendors and technology-specific equipment are available. Site conditions (depleted nitrate and sulfate, high DHC populations, ethene concentrations, stable plume lengths) indicate that current chlorinated solvent and petroleum hydrocarbon biodegradation is occurring and can be accelerated by NAPL recovery and biostimulation. New studies suggest 1,4-dioxane can degrade under anaerobic conditions.	Pros: Many other applications at similar sites for technologies, minimizing regulatory and permit condition issues. Minimal infrastructure and associated building permits needed.	Pros: Numerous vendors and technology specific equipment available.			
	Cons: Phased approach limitations, each stage dependent on success of prior stage, (e.g., free product removal needed before biostimulation, degradation of chlorinated VOCs necessary prior to degradation of residual petroleum compounds). If mobile LNAPL remains following the product recovery phase, it may be spread to new areas or even daylight during high pressure injection of substrates. Effective distribution of substrates in the subsurface is a limiting factor for all injection technologies. Subsurface heterogeneity may lead to uneven treatment. Monitoring and engineering controls will be required to address these potential issues.	Cons: Project will significantly exceed statutory limits of 12 month treatment.	Cons: None.			

Table 7-2
Evaluation of Removal Action Alternatives – *Implementability and Costs (continued)*
AMCO Chemical Superfund Site Oakland, California

IMPLEMENTABILITY				Costs		
Alternative No./ Technology	**Technical Feasibility**	**Administrative Feasibility**	**Availability of Service and Materials**	**Total Construction Costs**	**Total O&M Costs**	**Total Cost**
6. Free Product Removal followed by Soil Vapor Extraction (SVE) and Air Sparging (AS) System	MODERATE TO GOOD. Pros: Addresses both vadose zone and saturated zone. Treatment is equally effective over the entire source zone. Technologies are proven and generally effective. Many vendors and technology specific equipment are available. Cons: Subsurface heterogeneity may lead to uneven treatment. Monitoring and engineering controls would be necessary to ensure that LNAPL is not spread, VOCs are not emitted to the surface, and AS mounding does not impact SVE effectiveness. Concrete may need to be removed to allow for installation of horizontal wells. The ground surface would likely need to be sealed to prevent short circuiting and optimize SVE effectiveness. Condensate would be generated by SVE applied to shallow groundwater leading to liquid disposal requirements. Phased approach limitations as well, e.g., success of AS/SVE would be somewhat dependent on success of mobile LNAPL removal.	POOR TO MODERATE. Pros: Many other applications at similar sites for technologies, minimizing regulatory and permit condition issues. Cons: Project will significantly exceed statutory limits of 12-month treatment.	MODERATE. Pros: Numerous vendors and technology specific equipment available. The vapor treatment vendor is located in Southern California, maintains inventory of available equipment that can be rapidly mobilized to the site. Cons: Only 1 vapor treatment vendor has necessary technology for vapor treatment because the community will not allow ex-situ thermal treatment.	$12,362,077	$76,890	$12,420,716

APPENDIX A

Detailed Costing Spreadsheet,
Alternative 2 – Excavation and Offsite Disposal

EE/CA - AMCO
BASIS OF ESTIMATE SHEETS

Statement of Work

Scope Description:

Alternative 2.
The scope of Alternative 2 includes excavating contaminated soil from the site and haulign the waste material offsite for disposal.

Judgemental Factors Applied In Projecting From Known Source Data to the Estimate:

Costs developed for this BOE were based upon recent company experience as well as subcontractor quotes (both written and verbal)

Key Assumptions (not in conflict with the WBS):

1) All material will be excavated and disposed off site at an approved facility. 2) Soil conversion factor 1.75 (BCY to ton). 3) Concrete conversion factor 2.4 (BCY to ton). 4) 100% of excavated waste will be hazardous, and hauled to Aragonite, Utah for incineration. 6) A contingency equal to 10% of the total construction cost is added to account for unknowns.

Cost Elements

Construction Labor:

Item Description	Number of Units	Unit	Unit Price	TOTAL COST
Preliminary Site Cleanup and Security Improvements				
Engineer-Mid	160	hr	114.23	$18,277
SSHO	160	hr	114.01	$18,242
subtotal				**$36,518**
Remedial Design Data Collection				
Engineer-Mid	80	hr	114.23	$9,138
SSHO	80	hr	114.01	$9,121
Geologist-Mid	80	hr	115.97	$9,278
subtotal				**$27,537**
Abandon Wells				
Engineer-Mid	50	hr	114.23	$5,712
SSHO	50	hr	114.01	$5,701
Geologist-Mid	50	hr	115.97	$5,799
subtotal				**$17,211**
Install Tent				
Engineer-Mid	40	hr	114.23	$4,569
Environmental Technician	40	hr	71.37	$2,855
SSHO	40	hr	114.01	$4,560
subtotal				**$11,984**
Install Vapor Treatment System				
Engineer-Mid	40	hr	114.23	$4,569
Environmental Technician	40	hr	71.37	$2,855
SSHO	40	hr	114.01	$4,560
subtotal				**$11,984**
System Integration and Testing				
Engineer-Mid	40	hr	114.23	$4,569
Environmental Technician	40	hr	71.37	$2,855
SSHO	40	hr	114.01	$4,560
subtotal				**$11,984**
Remove, Haul, and Dispose of Concrete				
Engineer-Mid	80	hr	114.23	$9,138
Environmental Technician	180	hr	71.37	$12,847
SSHO	80	hr	114.01	$9,121
subtotal				**$31,106**
Install Sheet Pile and Dewatering System, Dewater				
Engineer-Mid	350	hr	114.23	$39,981
Environmental Technician	350	hr	71.37	$24,980
SSHO	350	hr	114.01	$39,904
subtotal				**$104,864**
Excavate, Haul, and Dispose of Soil and Groundwater				
Engineer-Mid	200	hr	114.23	$22,846
Environmental Technician	200	hr	71.37	$14,274
SSHO	200	hr	114.01	$22,802
subtotal				**$59,922**
Backfill, Compaction, Surface Restoration, Well Installation				
Engineer-Mid	200	hr	114.23	$22,846
Environmental Technician	200	hr	71.37	$14,274
Geologist-Mid	40	hr	115.97	$4,639
SSHO	200	hr	114.01	$22,802
subtotal				**$64,561**
Surface Component Decommisioning and Removal				
Engineer-Mid	200	hr	114.23	$22,846
Environmental Technician	200	hr	71.37	$14,274
SSHO	200	hr	114.01	$22,802
subtotal				**$59,922**
Post Excavation Groundwater Monitoring				
Engineer-Mid	50	Lump	114.23	$5,712
SSHO	50	Lump	114.01	$5,701
subtotal				**$11,412**
Total Construction Labor Cost				**$449,005**

Material:

Item Description	Number of Units	Unit	Unit Price	TOTAL COST	
PPE, Level D (day)	264	Person-Day	10.00	$2,640	Estimate based on previos project experience
Misc disposable field equipment (lump)	6	Month	1000.00	$6,000	Estimate based on previos project experience
Drums (each)	15	1	60.00	$900	Estimate based on previos project experience
17,640 gallon "frac tank" rental	1	Each	12060.00	$12,060	Verbal quote from Baker Tanks (2014)
Noise dampening enclosure for equipment	1	Lump	$100,000.00	$100,000	Estimate based on previos project experience
subtotal				**$121,600**	
Total Material Cost				**$121,600**	

EE/CA - AMCO
BASIS OF ESTIMATE SHEETS

Construction Costs:

Construction Description	Number of Units	Unit	Unit Rate	TOTAL COST	
Preliminary Site Cleanup and Security Improvements					
Utility Clearance	1	Lump	2000.00	$2,000	Estimate based on previous project experience
Security Fencing	840	LF	6.82	$5,729	Verbal Quote - National Construction Rentals
Power Drop	1	Lump	85000.00	$85,000	Estimate provided by ERH subcontractor McMillan-Mcgee (2014)
Security Guard	1	Month	8000.00	$8,000	Quote from California Private Patrol (2014)
Demo existing structure and SVE	1	Lump	25000.00	$25,000	Estimate based on previous project experience
subtotal				**$125,729**	
Remedial Design Data Collection					
Data Collection (drilling and sampling)	1	Lump	75000.00	$75,000	Estimate based on previous project experience
subtotal				**$75,000**	
Abandon Wells					
Well Abandonment	238	LF	90.00	$21,420	Estimate based on previous project experience
Security guard	0.25	month	8000.00	$2,000	Quote from California Private Patrol (2014)
subtotal				**$23,420**	
Install Tent					
Install Tent	1	Lump	500000.00	$500,000	Email quote from Big Top Shelters (2014)
Security Guard	0	month	8000.00	$2,000	Quote from California Private Patrol (2014)
subtotal				**$502,000**	
Install Vapor Treatment System					
Install Vapor Treatment System	1	Lump	330000.00	$330,000	Estimate based on previous project experience
Security guard	0.25	month	8000.00	$2,000	Quote from California Private Patrol (2014)
subtotal				**$332,000**	
System Integration and Testing					
Security guard	0.25	month	8000.00	$2,000	Quote from California Private Patrol (2014)
subtotal				**$2,000**	
Demo and Load Concrete					
Concrete Demolition	600	BCY	140.00	$84,000	Verbal quote - Pacific States Environmental Contractors (2015)
Load Concrete	840	LCY	5.00	$4,200	Verbal quote - Pacific States Environmental Contractors (2015)
Dust and vapor control	10	Day	1500.00	$15,000	Estimate based of previous project experience
Sampling and testing	16	Each	550.00	$8,800	Estimate based of previous project experience
Traffic Control	1	Month	2000.00	$1,000	Estimate based of previous project experience
Security guard	1.00	month	8000.00	$8,000	Quote from California Private Patrol (2014)
subtotal				**$121,000**	
Install Sheet Pile and Dewatering System					
Install sheet pile	50	SF	17800.00	$890,000	Verbal quote - Pacific States Environmental Contractors (2015)
Install dewatering wells	900	LF	1833.00	$1,649,700	Engineering estimate - 20 wells, average depth 45 feet
Mobilize dewatering pumps	1	Lump	2000.00	$2,000	Engineering estimate
Security guard	2.00	month	8000.00	$16,000	Quote from California Private Patrol (2014)
subtotal				**$2,557,700**	
Dewatering					
Waste characterization sampling	136	Each	650.00	$88,400	Engineering estimate - Assume 1 sample per 17,640 gal tank
Security guard	0.50	month	8000.00	$4,000	Quote from California Private Patrol (2014)
subtotal				**$92,400**	
Excavate, Haul, and Dispose of Soil and Groundwater					
Excavate soil (direct load to intermodal)	11,600	BCY	12.00	$139,200	Verbal quote - Pacific States Environmental Contractors (2015)
Waste Characterization sample analysis	232	each	550.00	$127,600	Engineering estimate - Assume 1 sample per 50 BCY
Confirmation sampling	216	Each	550.00	$118,800	Engineering estimate - assume 1 sample per 100 SF of footprint for each of two lifts
Traffic Control	2	Month	2000.00	$4,000	Estimate based of previous project experience
Security Guard	3	month	8000.00	$24,000	Quote from California Private Patrol (2014)
subtotal				**$413,600**	
Backfill, Compaction, Surface Restoration, Well Installation					
Backfill and compaction	11,600	BCY	30.00	$348,000	Verbal quote - Pacific States Environmental Contractors (2015)
Groundwater well installation	200	LF	110.00	$22,000	Engineering estimate based on previous projects
Security Guard	1	Month	8000.00	$8,000	Quote from California Private Patrol (2014)
subtotal				**$378,000**	
Surface Component Decommisioning and Removal					
Decontaminate and demobilize tent	1	Lump	500000.00	$500,000	Email quote from Big Top Shelters (2014)
Demobilize vapor treatment equipment	1	Lump	40000.00	$40,000	Engineering estimate
Security Guard	1	Mo	8000.00	$8,000	Quote from California Private Patrol (2014)
subtotal				**$548,000**	
Post Excavation Groundwater Monitoring					
Sample analysis	1	Lump	1500.00	$1,500	Engineering estimate based on previous projects
Equipment rental	1	Lump	1000.00	$1,000	Engineering estimate based on previous projects
subtotal				**$2,500**	
Construction Costs Subtotal				**$5,173,349**	
Subcontractor handling (1.67%)				**$86,395**	
Construction Costs TOTAL				**$5,259,744**	

Disposal Costs:

Waste Disposal Description	Number of Units	Unit	Unit Rate	TOTAL COST	
Concrete disposal/recycling fee	1440	Ton	65.00	$93,600	Verbal quote - Pacific States Environmental Contractors (2015)
Hazardous soil disposal	20,300	Ton	546.00	$11,083,800	Email quote from Clean Harbors (2015). Incineration; Aragonite, Utah.
Hazardous water disposal	2,400,000	Gal	1.30	$3,120,000	Cleen Harbors quote (Feb 2011) - Escalated 4 years at 4%/year
NAPL disposal	4,600	Gal	9.66	$44,436	Engineering estimate based on previous projects
Total Disposal Costs				**$14,341,836**	

Transportation Costs:

Waste Transportation Description	Number of Units	Unit	Unit Rate	TOTAL COST	
Concrete hauling	840	LCY	33.00	$27,720	Verbal quote - Pacific States Environmental Contractors (2015)
Hazardous soil hauling	20300	Ton	201.00	$4,080,300	Email quote from Clean Harbors (2015). Intermodal transport to Aragonite, Utah.
Hazardous water Hauling	480	Load	1255.00	$602,400	Engineering estimate - assume 5,000 gal per load
Total Transportation Cost				**$4,710,420**	

Other Direct Costs:

Item Description	Number of Units	Unit	Unit Rate	TOTAL COST
Portable sanitary station (week)	26	week	165.00	$4,290
Truck Scales (Month)				$0
ODC's - Site Support				**$4,290**
Labor				$0
Equipment				$0
Material:				$0
ODC's				$0
Subcontractors				$0
ODC's - Rad H&S				**$0**
Total ODC Costs				**$4,290**

Contingency:

Basis of Contingency:
10% general contingency applied.

Percent Contingency: 10.0%

Total WBS Cost:

Total Construction Labor Cost:	$449,005
Total Material Cost:	$121,600
Total Construction Cost	$5,259,744
Total Disposal Cost:	$14,341,836
Total Transportation Cost:	$4,710,420
Total ODC:	$4,290
TOTAL CONSTRUCTION CAPITAL COST (Less Contingency):	$24,886,895
TOTAL CONTINGENCY COST:	$2,488,689
TOTAL CONSTRUCTION CAPITAL COST (With Contingency):	**$27,375,584**
TOTAL CONSTRUCTION COST EXCLUDING WASTE T&D:	**$8,323,328**
Project Management (5%):	**$416,166**
Remedial Design (8%):	**$665,866**
Construction Management (6%):	**$499,400**

NOTE: Project Management, Remedial Design, and Construction Management costs are calculated as percents of the Total Construction Capital Cost excluding waste transportation and disposal.

TOTAL COST: $28,957,017

Approvals:

Prepared By:		Date:	
Reviewed By:		Date:	
Approved By:		Date:	

APPENDIX B

Detailed Costing Spreadsheet, Alternative 3 – Multi-Phase Extraction

EE/CA - AMCO
BASIS OF ESTIMATE SHEETS

Statement of Work

Scope Description:

Alternative 3.
The scope of Alternative 3 involves implementing multi-phase extraction within the treatment area for a total of 5 years followed by one year of quarterly groundwater monitoring.

Judgemental Factors Applied In Projecting From Known Source Data to the Estimate:

Costs developed for this BOE were based upon recent company experience as well as subcontractor quotes (both written and verbal)

Key Assumptions (not in conflict with the WBS):

1) Soil conversion factor 1.75 (BCY to ton). 2) Concrete conversion factor 2.4 (BCY to ton). 3) 100% of soil and water waste generated will be hazardous; soil waste hauled to Aragonite, Utah for incineration. 4) A contingency equal to 10% of the total construction cost is added to account for unknowns.

Cost Elements

Construction Labor:

Item Description	Number of Units	Unit	Unit Price	TOTAL COST
Preliminary Work for MPE Implementation - Year 1				
Preliminary Site Cleanup and Security Improvements				
Engineer-Mid	160	hr	$114.23	$18,277
Environmental Technician	160	hr	$71.37	$11,419
SSHO	160	hr	$114.01	$18,242
subtotal				**$47,938**
Remedial Design Data Collection				
Engineer-Mid	80	hr	$114.23	$9,138
SSHO	80	hr	$114.01	$9,121
Geologist-Mid	80	hr	$115.97	$9,278
subtotal				**$27,537**
Pilot Testing				
Engineer-Mid	160	hr	$114.23	$18,277
SSHO	160	hr	$114.01	$18,242
Geologist-Mid	50	hr	$115.97	$5,799
subtotal				**$42,317**
Subsurface Component Installation				
Engineer-Mid	160	hr	$114.23	$18,277
SSHO	160	hr	$114.01	$18,242
Geologist-Mid	160	hr	$115.97	$18,555
subtotal				**$55,074**
Surface Component Mobilization and Installation				
Engineer-Mid	160	hr	$114.23	$18,277
SSHO	160	hr	$114.01	$18,242
subtotal				**$36,518**
Conveyance Piping Installation and Wellfield Completions				
Engineer-Mid	160	hr	$114.23	$18,277
Environmental Technician	160	hr	$71.37	$11,419
SSHO	160	hr	$114.01	$18,242
subtotal				**$47,938**
System Integration and Testing				
Engineer-Mid	40	hr	$114.23	$4,569
SSHO	40	hr	$114.01	$4,560
subtotal				**$9,130**
Shakedown and Startup				
Engineer-Mid	80	hr	$114.23	$9,138
SSHO	80	hr	$114.01	$9,121
subtotal				**$18,259**
MPE Operation - Year 1				
Engineer-Mid	1,600	hr	$114.23	$182,768
SSHO	1,600	hr	$114.01	$182,416
subtotal				**$365,184**
MPE Operation - Year 2				
subtotal				**$365,184**
TOTAL (Escalated 1 year at 4%/year)				**$379,791**
MPE Operation - Year 3				
subtotal				**$365,184**
TOTAL (Escalated 2 years at 4%/year)				**$394,983**
MPE Operation - Year 4				
subtotal				**$365,184**
TOTAL (Escalated 3 years at 4%/year)				**$410,782**
MPE Operation - Year 5				
subtotal				**$365,184**
TOTAL (Escalated 4 years at 4%/year)				**$427,214**
Post Shut-Down Groundwater Sampling, System Demo, and Demobilization - Year 6				
Post Shut-Down Groundwater Sampling				
Engineer-Mid	40	hr	$114.23	$4,569
SSHO	40	hr	$114.01	$4,560
subtotal				**$9,130**
TOTAL (Escalated 5 years at 4%/year)				**$11,108**
Well Destruction and Conveyance Piping Abandonment				
Engineer-Mid	160	hr	$114.23	$18,277
Geologist-Mid	160	hr	$115.97	$18,555
SSHO	160	hr	$114.01	$18,242
subtotal				**$55,074**
TOTAL (Escalated 5 years at 4%/year)				**$67,005**
Surface Component Decomissioning and Removal				
Engineer-Mid	160	hr	$114.23	$18,277
Environmental Technician	160	hr	$71.37	$11,419
SSHO	160	hr	$114.01	$18,242
subtotal				**$47,938**
TOTAL (Escalated 5 years at 4%/year)				**$58,323**
Total Construction Labor Cost (Present Value)				**$2,399,100**

O&M Labor:

Item Description	Number of Units	Unit	Unit Price	TOTAL COST
Quarterly Monitoring - Year 6				
Four Quarterly Monitoring Events				
Engineer-Mid	160	hr	$114.23	$18,277
SSHO	160	hr	$114.01	$18,242
subtotal				**$36,518**
TOTAL (Escalated 5 years at 4%/year)				**$44,430**
Total O&M Labor Cost (Present Value)				**$44,430**

Construction Materials:

Item Description	Number of Units	Unit	Unit Price	TOTAL COST	
Preliminary Work for MPE Implementation - Year 1					
PPE, Level D (day)	300	Person-Day	$10.00	$3,000	Estimate based on previous project experience
Misc disposable field equipment (lump)	2	Month	$1,000.00	$2,000	Estimate based on previous project experience
Noise dampening enclosures for equipment	1	Lump	$100,000.00	$100,000	Estimate based on previous project experience
2,000 gallon product tank	1	Each	$8,808.00	$8,808	Online quote from Northern Tool (2014)
Condensate water tank (2,000 gal)	1	Each	$2,000.00	$2,000	Estimate based on previous project experience
Vapor phase GAC	2	Each	$4,000.00	$8,000	500-lb units with initial carbon. Estimate based on previous project experience
Product separator	1	Each	$20,000.00	$20,000	Email estimate from GeoTech Environmental (2014)
Air stripper	1	Each	$50,000.00	$50,000	Email estimate from QED Environmental Systems (2014)
Liquid phase GAC	2	Each	$8,000.00	$16,000	2000-lb units with initial carbon. Estimate based on previous project experience
Groundwater pumps w/ fittings and hose	32	Each	$3,324.00	$106,368	Quote provided by QED Environmental Systems (2014)
Air compressor for pneumatic pumps	1	Each	$15,208.00	$15,208	Email estimate from American Compressors (2014)
subtotal				**$331,384**	
MPE Operation - Year 1					
PPE, Level D (day)	200	Person-Day	$10.00	$2,000	Estimate based on previous project experience
Misc disposable field equipment (lump)	12	Month	$1,000.00	$12,000	Estimate based on previous project experience
subtotal				**$14,000**	
MPE Operation - Year 2					
subtotal				**$14,000**	
TOTAL (Escalated 1 year at 4%/year)				**$14,560**	
MPE Operation - Year 3					
subtotal				**$14,000**	
TOTAL (Escalated 2 years at 4%/year)				**$15,142**	
MPE Operation - Year 4					
subtotal				**$14,000**	
TOTAL (Escalated 2 years at 4%/year)				**$15,748**	
MPE Operation - Year 5					
subtotal				**$14,000**	
TOTAL (Escalated 2 years at 4%/year)				**$16,378**	
Post Shut-Down Groundwater Sampling, System Demo, and Demobilization - Year 6					
PPE, Level D (day)	200	Person-Day	$10.00	$2,000	Estimate based on previous project experience
Misc disposable field equipment (lump)	12	Month	$1,000.00	$12,000	Estimate based on previous project experience
Groundwater sampling equipment	1	Event	$1,000.00	$4,000	Estimate based on previous project experience
subtotal				**$18,000**	
TOTAL (Escalated 5 years at 4%/year)				**$21,900**	
Total Construction Material Cost (Present Value)				**$429,112**	

EE/CA - AMCO
BASIS OF ESTIMATE SHEETS

O&M Materials:

Item Description	Number of Units	Unit	Unit Price	TOTAL COST	
Quarterly Monitoring - Year 6					
Four Quarterly Monitoring Events					
PPE, Level D (day)	40	Person-Day	$10.00	$400	Estimate based on previous project experience
Misc disposable field equipment (lump)	1	Month	$1,000.00	$1,000	Estimate based on previous project experience
Groundwater sampling equipment	4	Event	$1,000.00	$4,000	Estimate based on previous project experience
subtotal				**$5,400**	
TOTAL (Escalated 5 years at 4%/year)				**$6,570**	
Total O&M Material Cost (Present Value)				**$6,570**	

Construction Subcontractor Costs:

Construction Description	Number of Units	Unit	Unit Rate	TOTAL COST	
Preliminary Work for MPE Implementation - Year 1					
Preliminary Site Cleanup and Security Improvements					
Utility Clearance	1	Lump	$2,000.00	$2,000	Estimate based on previous project experience
Install security fencing	840	LF	$6.82	$5,729	Verbal Quote - National Construction Rentals (2014)
Install security system	1	Lump	$15,000.00	$15,000	Estimate based on previous project experience
Power Drop	1	Lump	$85,000.00	$85,000	Estimate provided by McMillan-Mcgee Corp (2014)
Demolish exitsting concrete layer	600	BCY	$140.00	$84,000	Verbal quote - Pacific States Environmental Contractors (2015)
Load concrete	840	LCY	$5.00	$4,200	Verbal quote - Pacific States Environmental Contractors (2015)
Dust and vapor control	10	Day	$1,500.00	$15,000	Estimate based on previous project experience
Sampling and testing	16	Each	$550.00	$8,800	Estimate based on previous project experience
Install vapor cap	1	Lump	$85,000.00	$85,000	Estimate provided by McMillan-Mcgee Corp (2014)
Traffic Control	1	Month	$2,000.00	$2,000	Estimate based on previous project experience
Demo existing structure and SVE	1	Lump	$25,000.00	$25,000	Estimate based on previous project experience
Security Guard	1	month	$8,000.00	$8,000	Quote from California Private Patrol (2014)
Security System	1	Month	$1,000.00	$1,000	Quote from Core1 Security Services (2014)
subtotal				**$340,729**	
Remedial Design Data Collection					
Data collection (drilling and sampling)	1	Lump	$75,000.00	$75,000	Estimated based on previous project experience
Traffic Control	0.5	Month	$2,000.00	$1,000	Estimate based on previous project experience
Security Guard	0.5	month	$8,000.00	$4,000	Quote from California Private Patrol (2014)
Security System	0.5	Month	$1,000.00	$500	Quote from Core1 Security Services (2014)
subtotal				**$80,500**	
Pilot Testing					
AS/SVE Pilot Testing (all inclusive)	1	Lump	$175,000.00	$175,000	Estimated based on similar pilot study conducted in 2012. Includes all subs an
Traffic Control	0.5	Month	$2,000.00	$1,000	Estimate based on previous project experience
Security Guard	0.5	month	$8,000.00	$4,000	Quote from California Private Patrol (2014)
Security System	0.5	Month	$1,000.00	$500	Quote from Core1 Security Services (2014)
subtotal				**$180,500**	
Subsurface Component Installation					
Extraction well installation	1,093	LF	$110.00	$120,230	Estimated based on previous project experience
Groundwater monitoring well installation	400	LF	$110.00	$44,000	Estimated based on previous project experience
Traffic Control	1	Month	$2,000.00	$2,000	Estimate based on previous project experience
Security Guard	1	month	$8,000.00	$8,000	Quote from California Private Patrol (2014)
Security System	1	Month	$1,000.00	$1,000	Quote from Core1 Security Services (2014)
subtotal				**$175,230**	
Surface Component Mobilization and Installation					
Mobilize and install vapor treatment system	1	Lump	$17,000.00	$17,000	Quote provided by GEO, Inc (2014)
Traffic Control	1	Month	$2,000.00	$2,000	Estimate based on previous project experience
Security Guard	1	month	$8,000.00	$8,000	Quote from California Private Patrol (2014)
Security System	1	Month	$1,000.00	$1,000	Quote from Core1 Security Services (2014)
subtotal				**$28,000**	
Conveyance Piping Installation and Wellfield Completions					
Install conveyance piping (includes materials)	1	Lump	$75,000.00	$75,000	Estimate based on previous project experience
Traffic Control	0.5	Month	$2,000.00	$1,000	Estimate based on previous project experience
Security Guard	0.5	month	$8,000.00	$4,000	Quote from California Private Patrol (2014)
Security System	0.5	Month	$1,000.00	$500	Quote from Core1 Security Services (2014)
subtotal				**$80,500**	
System Integration and Testing					
GEO, Inc operator on site	5	day	$750.00	$3,750	Quote provided by GEO, Inc (2014)
GEO C3 system monthly costs	0.25	Month	$33,000.00	$8,250	Quote provided by GEO, Inc (2014)
Electrical usage for vapor treatment	24,192	KWH	$0.18	$4,265	One week of electricity for vapor treatment system. Usage based on GEO, Inc. quote (2014).
Traffic Control	0.50	Month	$2,000.00	$1,000	Estimate based on previous project experience
Security Guard	0.50	month	$8,000.00	$4,000	Quote from California Private Patrol (2014)
Security System	0.50	Month	$1,000.00	$500	Quote from Core1 Security Services (2014)
subtotal				**$21,765**	
Shakedown and Startup					
PPE, Level D (day)	10	Person-Day	$10.00	$100	Estimate based on previous project experience
Misc disposable field equipment (lump)	0.25	Month	$1,000.00	$250	Estimate based on previous project experience
GEO, Inc operator on site	5	day	$750.00	$3,750	Quote provided by GEO, Inc (2014)
GEO C3 system monthly costs	0.25	Month	$33,000.00	$8,250	Quote provided by GEO, Inc (2014)
Electrical usage for vapor treatment	1,261,440	KWH	$0.18	$222,392	One week of electricity for vapor treatment system. Usage based on GEO, Inc. quote (2014).
Traffic Control	0.25	Month	$2,000.00	$500	Estimate based on previous project experience
Security Guard	0.25	month	$8,000.00	$2,000	Quote from California Private Patrol (2014)
Security System	0.25	Month	$1,000.00	$250	Quote from Core1 Security Services (2014)
subtotal				**$237,492**	
MPE Operation - Year 1					
PPE, Level D (day)	400	Person-Day	$10.00	$4,000.00	Estimate based on previous project experience
Misc disposable field equipment (lump)	12	Month	$1,000.00	$12,000.00	Estimate based on previous project experience
GEO, Inc operator on site	52	day	$750.00	$39,000.00	Quote provided by GEO, Inc (2014)
GEO C3 system monthly costs	12	Month	$33,000.00	$396,000.00	Quote provided by GEO, Inc (2014)
Electrical usage for vapor treatment	1,261,440	KWH	$0.18	$222,391.87	One year of electricity for vapor treatment system. Usage based on GEO, Inc. quote (2014).
Vapor phase GAC changeout	2	Each	$1,500.00	$3,000.00	Change out one 500-lb unit. Estimate based on previous project experience
Liquid phase GAC changeout	4	Each	$6,000.00	$24,000.00	Estimate based on previous project experience
Security System	12.00	Month	$1,000.00	$12,000.00	Quote from Core1 Security Services (2014)
subtotal				**$712,392**	
MPE Operation - Year 2					
subtotal				**$712,392**	
TOTAL (Escalated 1 year at 4%/year)				**$740,888**	
MPE Operation - Year 3					
subtotal				**$712,392**	
TOTAL (Escalated 2 years at 4%/year)				**$770,523**	
MPE Operation - Year 4					
subtotal				**$712,392**	
TOTAL (Escalated 3 years at 4%/year)				**$801,344**	
MPE Operation - Year 5					
subtotal				**$712,392**	
TOTAL (Escalated 4 years at 4%/year)				**$833,398**	
Post Shut-Down Groundwater Sampling, System Demo, and Demobilization - Year 6					
Post Shutdown Groundwater Sampling					
Laboratory analysis	1	Event	$1,500.00	$1,500	Estimate based on previous project experience
subtotal				**$1,500**	
TOTAL (Escalated 5 years at 4%/year)				**$1,825**	
Well Destruction and Conveyance Piping Abandonment					
Well Abandonment (overdrill)	1,093	LF	$90.00	$98,370	Estimate based on previous project experience
Conveyance piping abandonment	1	Lump	$15,000.00	$15,000	Estimate based on previous project experience
Traffic Control	2.00	Month	$2,000.00	$4,000	Estimate based on previous project experience
Security Guard	2.00	month	$8,000.00	$16,000	Quote from California Private Patrol (2014)
Security System	2.00	Month	$1,000.00	$2,000	Quote from Core1 Security Services (2014)
subtotal				**$135,370**	
TOTAL (Escalated 5 years at 4%/year)				**$164,698**	
Surface Component Decomissioning and Removal					
Decommission and demobe GEO C3 unit	1	Lump	$8,500.00	$8,500	Quote provided by GEO, Inc (2014)
Traffic Control	0.50	Month	$2,000.00	$1,000	Estimate based on previous project experience
Security Guard	0.50	month	$8,000.00	$4,000	Quote from California Private Patrol (2014)
Security System	0.50	Month	$1,000.00	$500	Quote from Core1 Security Services (2014)
subtotal				**$14,000**	
TOTAL (Escalated 5 years at 4%/year)				**$17,033**	
Construction Subcontractor Costs Subtotal (Present Value)				**$5,186,816**	
Subcontractor handling (1.67%)				**$86,620**	
Construction Subcontractor Costs TOTAL (Present Value)				**$5,273,436**	

O&M Subcontractor Costs:

Quarterly Monitoring - Year 6					
Four Quarterly Monitoring Events					
Lab analysis	4	Event	$1,500.00	$6,000	Estimate based on previous project experience
subtotal				**$6,000**	
TOTAL (Escalated 5 years at 4%/year)				**$7,300**	
O&M Subcontractor Costs Subtotal (Present Value)				**$7,300**	
Subcontractor handling (1.67%)				**$122**	
O&M Subcontractor Costs TOTAL (Present Value)				**$7,422**	

EE/CA - AMCO
BASIS OF ESTIMATE SHEETS

Construction Disposal Costs:

Waste Disposal Description	Number of Units	Unit	Unit Rate	TOTAL COST	
Preliminary Work for MPE Implementation - Year 1					
Concrete disposal/recycling fee	1440	Ton	$65.00	$93,600	Verbal quote - Pacific States Environmental Contractors (2015)
Hazardous soil disposal	75	Ton	$546.00	$40,950	Email quote from Clean Harbors (2015). Incineration; Aragonite, Utah.
subtotal				**$134,550**	
MPE Operation - Year 1					
Treated water disposal	10,000,000	Gal	$0.005	$50,000	Estimate based on previous project experience
subtotal				**$50,000**	
MPE Operation - Year 2					
subtotal				**$50,000**	
TOTAL (Escalated 1 year at 4%/year)				**$52,000**	
MPE Operation - Year 3					
subtotal				**$16,000**	
TOTAL (Escalated 2 years at 4%/year)				**$17,306**	
MPE Operation - Year 4					
subtotal				**$16,000**	
TOTAL (Escalated 3 years at 4%/year)				**$17,998**	
MPE Operation - Year 5					
subtotal				**$16,000**	
TOTAL (Escalated 4 years at 4%/year)				**$18,718**	
Post Shut-Down Groundwater Sampling, System Demo, and Demobilization - Year 6					
LNAPL disposal	4,600	Gal	$9.66	$44,436	Estimate based on previous project experience
subtotal				**$44,436**	
TOTAL (Escalated 5 years at 4%/year)				**$54,063**	
Total Disposal Costs (Present Value)				**$344,634**	

Construction Transportation Costs:

Waste Transportation Description	Number of Units	Unit	Unit Rate	TOTAL COST	
Preliminary Work for MPE Implementation - Year 1					
Concrete hauling	840	LCY	$33.00	$27,720	Verbal quote - Pacific States Environmental Contractors (2015)
Hazardous soil hauling	75	Ton	$201.00	$15,075	Email quote from Clean Harbors (2015). Intermodal transport to Aragonite, Uta
subtotal				**$42,795**	
Post Shut-Down Groundwater Sampling, System Demo, and Demobilization - Year 6					
NAPL hauling	15	ton	$201.00	$3,015	Assumed similar to hazardous soil hauling. Cleen Harbors quote (2015)
subtotal				**$3,015**	
TOTAL (Escalated 5 years at 4%/year)				**$3,668**	
Total Transportation Cost (Present Value)				**$46,463**	

O&M Disposal Costs:

Waste Disposal Description	Number of Units	Unit	Unit Rate	TOTAL COST	
Quarterly Monitoring - Year 6					
Four Quarterly Monitoring Events					
Hazardous water disposal	4	Drum	$200.00	$800	Estimate based on previous project experience
subtotal				**$800**	
TOTAL (Escalated 5 years at 4%/year)				**$973**	
Total O&M Disposal Costs (Present Value)				**$973**	

O&M Transportation Costs:

Waste Transportation Description	Number of Units	Unit	Unit Rate	TOTAL COST	
Quarterly Monitoring - Year 8					
Four Quarterly Monitoring Events					
Hazardous water hauling	4	Drum	$800.00	$3,200	Estimate based on previous project experience
subtotal				**$3,200**	
TOTAL (Escalated 5 years at 4%/year)				**$3,893**	
Total O&M Disposal Costs (Present Value)				**$3,893**	

Other Direct Costs:

Item Description	Number of Units	Unit	Unit Rate	TOTAL COST
Portable sanitary station (week)	340	week	$165.00	$56,100
Truck Scales (Month)				$0
ODC's - Site Support				**$56,100**
Labor				$0
Equipment				$0
Material:				$0
ODC's				$0
Subcontractors				$0
ODC's - Rad H&S				**$0**
Total ODC Costs				**$56,100**

Contingency:

Basis of Contingency:
10% general contingency applied.

Percent Contingency: 10.0%

Total WBS Costs:

Total Construction Costs

Total Construction Labor Cost:	$2,399,100
Total Construction Material Cost:	$429,112
Total Construction Subcontractor Cost	$5,273,436
Total Construction Disposal Cost:	$344,634
Total Construction Transportation Cost:	$46,463
Total ODC:	$56,100
TOTAL CONSTRUCTION CAPITAL COST (Less Contingency):	$8,548,846
TOTAL CONTINGENCY COST:	$854,885
TOTAL CONSTRUCTION CAPITAL COST (With Contingency):	**$9,403,731**
Project Management (5%):	**$470,187**
Remedial Design (8%):	**$752,298**
Construction Management (6%):	**$564,224**
TOTAL CONSTRUCTION COST:	**$11,190,440**

Total O&M Costs

Total O&M Labor Cost:	$44,430
Total O&M Subcontractor Cost:	$7,422
Total O&M Material Cost:	$6,570
Total O&M Disposal Cost:	$973
Total O&M Transportation Cost:	$3,893
TOTAL O&M CAPITAL COST (Less Contingency):	$63,289
TOTAL CONTINGENCY COST:	$6,329
TOTAL O&M CAPITAL COST (With Contingency):	$69,617
Technical Support (10%)	**$6,962**
TOTAL O&M COST:	**$69,617**

TOTAL COSTS

TOTAL CONSTRUCTION COST:	**$11,190,440**
TOTAL O&M COST:	**$58,640**
TOTAL COST:	**$11,249,079.83**

Approvals:

Prepared By:		Date:	
Reviewed By:		Date:	
Approved By:		Date:	

APPENDIX C

Detailed Costing Spreadsheet, Alternative 4 – In-Situ Thermal Heating

EE/CA - AMCO
BASIS OF ESTIMATE SHEETS

Statement of Work

Scope Description:

Alternative 4.
The scope of Alternative 4 involves implementing in-situ electrical resistance heating technology to recover VOCs from the treatment area.

Judgemental Factors Applied In Projecting From Known Source Data to the Estimate:

Costs developed for this BOE were based upon recent company experience as well as subcontractor quotes (both written and verbal)

Key Assumptions (not in conflict with the WBS):

1) Soil conversion factor 1.75 (BCY to ton). 2) Concrete conversion factor 2.4 (BCY to ton). 3) 100% of soil and water waste generated will be hazardous; soil waste hauled to Aragonite, Utah for incineration. 4) A contingency equal to 10% of the total construction cost is added to account for unknowns.

Cost Elements

Construction Labor:

Item Description	Number of Units	Unit	Unit Price	TOTAL COST
Preliminary Site Cleanup and Security Improvements				
Engineer-Mid	160	hr	$114.23	$18,277
SSHO	160	hr	$114.01	$18,242
subtotal				**$36,518**
Remedial Design Data Collection				
Engineer-Mid	80	hr	$114.23	$9,138
SSHO	80	hr	$114.01	$9,121
Geologist-Mid	80	hr	$115.97	$9,278
subtotal				**$27,537**
Bench Testing				
Engineer-Mid	40	hr	$114.23	$4,569
SSHO	40	hr	$114.01	$4,560
subtotal				**$9,130**
Subsurface Component Installation				
Engineer-Mid	160	hr	$114.23	$18,277
SSHO	160	hr	$114.01	$18,242
Geologist-Mid	160	hr	$115.97	$18,555
subtotal				**$55,074**
Surface Component Mobilization and Installation				
Engineer-Mid	160	hr	$114.23	$18,277
Environmental Technician	160	hr	$71.37	$11,419
SSHO	160	hr	$114.01	$18,242
subtotal				**$47,938**
Conveyance Piping Installation and Wellfield Completions				
Engineer-Mid	160	hr	$114.23	$18,277
SSHO	160	hr	$114.01	$18,242
subtotal				**$36,518**
System Integration and Testing				
Engineer-Mid	40	hr	$114.23	$4,569
SSHO	40	hr	$114.01	$4,560
subtotal				**$9,130**
Shakedown and Startup				
Engineer-Mid	40	hr	$114.23	$4,569
SSHO	40	hr	$114.01	$4,560
subtotal				**$9,130**
ISH Operation (6 months)				
Engineer-Mid	1,000	hr	$114.23	$114,230
SSHO	1,000	hr	$114.01	$114,010
subtotal				**$228,240**
Post Shutdown Groundwater Monitoring				
Engineer-Mid	40	hr	$114.23	$4,569
SSHO	40	hr	$114.01	$4,560
subtotal				**$9,130**
Well abandonment and Conveyance Piping Removal				
Engineer-Mid	320	hr	$114.23	$36,554
SSHO	320	hr	$114.01	$36,483
Geologist-Mid	160	hr	$115.97	$18,555
subtotal				**$91,592**
Surface Component Decomissioning and Removal				
Engineer-Mid	320	hr	$114.23	$36,554
SSHO	320	hr	$114.01	$36,483
subtotal				**$73,037**
Total Construction Labor Cost				**$632,972**

O&M Labor:

Item Description	Number of Units	Unit	Unit Price	TOTAL COST
1st Quarterly Groundwater Monitoring Event				
Engineer-Mid	40	hr	$114.23	$4,569
SSHO	40	hr	$114.01	$4,560
subtotal				**$9,130**
2nd Quarterly Groundwater Monitoring Event				
Engineer-Mid	40	hr	$114.23	$4,569
SSHO	40	hr	$114.01	$4,560
subtotal				**$9,130**
3rd Quarterly Groundwater Monitoring Event				
Engineer-Mid	40	hr	$114.23	$4,569
SSHO	40	hr	$114.01	$4,560
subtotal				**$9,130**
4th Quarterly Groundwater Monitoring Event				
Engineer-Mid	40	hr	$114.23	$4,569
SSHO	40	hr	$114.01	$4,560
subtotal				**$9,130**
Subtotal O&M Labor Cost				**$36,518**
Total O&M Labor Cost (Present Value)				**$37,979**

O&M will occur on the second year, therefore cost escalated one year at 4%/year

Construction Materials:

Item Description	Number of Units	Unit	Unit Price	TOTAL COST	
PPE, Level D (day)	400	Person-Day	$10.00	$4,000	Estimate based on previous project experience
Noise dampening encosures for equipment	1	Lump	$100,000.00	$100,000	Estimate based on previous project experience
Misc disposable field equipment (lump)	6	Month	$1,000.00	$6,000	Estimate based on previous project experience
Drums (each)	15	1	$60.00	$900	Estimate based on previous project experience
Groundwater sampling equipment	1	Event	$1,000.00	$1,000	Estimate based on previous project experience
Municipal water for cooling tower	5,540,898	gal	$0.00	$22,164	Estimate provided by McMillan-Mcgee Corp (2014).
Product tank (2000-gal)	1	Each	$8,808.00	$8,808	Online quote from Nothern Tool
Condensate water tank (2,000 gal)	1	Each	$2,000.00	$2,000	Estimate based on previous project experience
Treated water holding tanks (4x6500 gal)	1	Lump	$24,000.00	$24,000	Verbal estimate from Baker Tanks
Pneumatic groundwater pumps with fittings	52	Each	$5,244.00	$272,688	Temperature rated. 2009 email estimate from QED Environmental Systems, escalated 5 years at 4%/year.
Air compressor for pneumatic pumps	1	Each	$15,208.00	$15,208	Email estimate from American Compressors (2014)
Product separator	1	Each	$20,000.00	$20,000	Email estimate from GeoTech Environmental (2014)
Air stripper	1	Each	$50,000.00	$50,000	Email estimate from QED Environmental Systems (2014)
Vapor phase GAC	2	Each	$4,000.00	$8,000	500-lb units with initial carbon. Estimate based on previous project experience
Liquid phase GAC	2	Each	$8,000.00	$16,000	2000-lb units with initial carbon. Estimate based on previous project experience
subtotal				**$550,768**	
Total Construction Material Cost				**$550,768**	

O&M Materials:

Item Description	Number of Units	Unit	Unit Price	TOTAL COST	
PPE, Level D (day)	40	Person-Day	$10.00	$400	Estimate based on previous project experience
Groundwater sampling equipment	4	Event	$1,000.00	$4,000	Estimate based on previous project experience
Drums (each)	4	Each	$60.00	$240	Estimate based on previous project experience
subtotal				**$4,640**	
Subtotal O&M Material Cost				**$4,640**	
Total O&M Material Cost (Present Value)				**$4,826**	

O&M will occur on the second year, therefore cost escalated one year at 4%/year

EE/CA - AMCO
BASIS OF ESTIMATE SHEETS

Construction Subcontractor Costs:

Construction Description	Number of Units	Unit	Unit Rate	TOTAL COST	
Preliminary Site Cleanup and Security Improvements					
Utility Clearance	1	Lump	$2,000.00	$2,000	Estimate based on previous project experience
Install security fencing	840	LF	$6.82	$5,729	Verbal Quote - National Construction Rentals (2014)
Install security system	1	Lump	$15,000.00	$15,000	Estimate based on previous project experience
Power Drop	1	Lump	$85,000.00	$85,000	Estimate provided by McMillan-Mcgee Corp (2014)
Demolish exitsting concrete layer	600	BCY	$140.00	$84,000	Verbal quote - Pacific States Environmental Contractors (2015)
Load concrete	840	LCY	$5.00	$4,200	Verbal quote - Pacific States Environmental Contractors (2015)
Dust and vapor control	10	Day	$1,500.00	$15,000	Estimate based on previous project experience
Sampling and testing	16	Each	$550.00	$8,800	Estimate based on previous project experience
Install vapor cap	1	Lump	$85,000.00	$85,000	Estimate provided by McMillan-Mcgee Corp (2014)
Traffic Control	1	Month	$2,000.00	$2,000	Estimate based on previous project experience
Demo existing structure and SVE	1	Lump	$25,000.00	$25,000	Estimate based on previous project experience
Security Guard	1	month	$8,000.00	$8,000	Quote from California Private Patrol (2014)
Security System	1	Month	$1,000.00	$1,000	Quote from Core1 Security Services (2014)
subtotal				**$340,729**	
Remedial Design Data Collection					
Data Collection (drilling and sampling)	1	Lump	$75,000.00	$75,000	Estimate based on previous project experience
subtotal				**$75,000**	
Bench Testing					
Data Collection (All inclusive)	1	Lump	$111,591.00	$111,591	Estimate based on previous ERH project experience (Ratheon Building B-2)
subtotal				**$111,591**	
Subsurface Component Installation					
Well Abandonment	238	LF	$90.00	$21,420	Overdrill existing GW wells within treatment area (PVC casings). Estimate based on previous project experience.
Install extraction wells	1,830	LF	$110.00	$201,300	Estimate based on previous project experience. McMillan-Mcgee Corp specified 1830 LF in design.
Install electrodes	2,323	LF	$75.00	$174,225	Estimate provided by McMillan-Mcgee Corp (2014)
Install sensor wells	845	LF	$50.00	$42,250	Estimate provided by McMillan-Mcgee Corp (2014)
Install groundwater monitoring wells	540	LF	$110.00	$59,400	Estimate based on previous project experience
Traffic Control	1	Month	$2,000.00	$2,000	Estimate based on previous project experience
Security guard	1.00	Month	$8,000.00	$8,000	Quote from California Private Patrol (2014)
Security System	1	Month	$1,000.00	$1,000	Quote from Core1 Security Services (2014)
subtotal				**$509,595**	
Surface Component Mobilization and Installation					
Mobilize and install ERH system	1	Lump	$1,125,937.00	$1,125,937	Quote provided by McMillan-Mcgee Corp (2014)
Mobilize and install vapor treatment system	1	Lump	$17,000.00	$17,000	Quote provided by GEO, Inc (2014)
Security Guard	1	month	$8,000.00	$8,000	Quote from California Private Patrol (2014)
Security System	1	Month	$1,000.00	$1,000	Quote from Core1 Security Services (2014)
subtotal				**$1,151,937**	
Conveyance Piping Installation and Wellfield Completions					
Piping/manifold installation	1	Lump	$156,000.00	$156,000	Estimate provided by McMillan-Mcgee Corp (2014). Includes materials
Traffic Control	0	Month	$2,000.00	$500	Estimate based on previous project experience
Security guard	0.25	month	$8,000.00	$2,000	Quote from California Private Patrol (2014)
Security System	1	Month	$1,000.00	$1,000	Quote from Core1 Security Services (2014)
subtotal				**$159,500**	
System Integration and Testing					
GEO, Inc operator on site	10	day	$750.00	$7,500	Quote provided by GEO, Inc (2014)
Electrical usage	230,028	KWH	$0.18	$40,554	One week of electricity usage for ERH and GEO C3 systems. Usage based on subcontractor bids. Elecricity rate from U.S. Energy Information Administration.
Traffic Control	1	Month	$2,000.00	$1,000	Estimate based on previous project experience
Security guard	0.25	month	$8,000.00	$2,000	Quote from California Private Patrol (2014)
Security System	0.25	Month	$1,000.00	$250	Quote from Core1 Security Services (2014)
subtotal				**$51,304**	
Shakedown and Startup					
Electrical usage	230,028	KWH	$0.18	$40,554	One week of electricity for ERH and GEO C3 systems. Elecricity rate from U.S. Energy Information Administration.
GEO, Inc system monthly rate	0.25	Month	$33,000.00	$8,250	Quote provided by GEO, Inc (2014)
Traffic Control	0.25	Month	$2,000.00	$500	Estimate based on previous project experience
Security guard	0.25	month	$8,000.00	$2,000	Quote from California Private Patrol (2014)
Security System	0.25	Month	$1,000.00	$250	Quote from Core1 Security Services (2014)
subtotal				**$51,554**	
ERH Operation (6 months)					
Electrical usage	5,980,722	KWH	$0.18	$1,054,401	6 month of electricity for ERH and GEO C3 systems. Elecricity rate from U.S. Energy Information Administration.
GEO, Inc system monthly rate	6	Month	$33,000.00	$198,000	Quote provided by GEO, Inc (2014)
ERH system operation	1	Lump	$450,622.00	$450,622	Quote provided by McMillan-Mcgee Corp (2014)
Vapor phase GAC changeout	1	Each	$1,500.00	$1,500	Estimate based on previous project experience
Liquid phase GAC changeout	6	Each	$6,000.00	$36,000	Estimate based on previous project experience
Traffic Control	6	Month	$2,000.00	$12,000	Estimate based on previous project experience
Security guard	6	month	$8,000.00	$48,000	Quote from California Private Patrol (2014)
Security System	6	Month	$1,000.00	$6,000	Quote from Core1 Security Services (2014)
subtotal				**$1,806,523**	
Post Shutdown Groundwater Monitoring					
Sample Analysis	1	Event	$1,500.00	$1,500	Estimate based on previous project experience
Traffic Control	0.25	Month	$2,000.00	$500	Estimate based on previous project experience
Security guard	0.25	month	$8,000.00	$2,000	Quote from California Private Patrol (2014)
Security System	0.25	Month	$1,000.00	$250	Quote from Core1 Security Services (2014)
subtotal				**$4,250**	
Well abandonment and Conveyance Piping Removal					
Well abandonment	4,998	Each	$90.00	$449,820	Overdrill extraction wells, electrodes, and sensor wells. Estimate based on previous project experience.
Traffic Control	2.00	Month	$2,000.00	$4,000	Estimate based on previous project experience
Security guard	2.00	month	$8,000.00	$16,000	Quote from California Private Patrol (2014)
Security System	2.00	Month	$1,000.00	$2,000	Quote from Core1 Security Services (2014)
subtotal				**$471,820**	
Surface Component Decomissioning and Removal					
Decommission and demobe ERH system	1	Lump	$60,342.00	$60,342	Quote provided by McMillan-Mcgee Corp (2014)
Decommission and demobe GEO C3 unit	1	Lump	$8,500.00	$8,500	Quote provided by GEO, Inc (2014)
Traffic Control	2.00	Month	$2,000.00	$4,000	Estimate based on previous project experience
Security guard	2.00	month	$8,000.00	$16,000	Quote from California Private Patrol (2014)
Security System	2.00	Month	$1,000.00	$2,000	Quote from Core1 Security Services (2014)
subtotal				**$90,842**	
Construction Subcontractor Costs Subtotal				**$4,824,645**	
Subcontractor handling (1.67%)				**$80,572**	
Construction Subcontractor Costs TOTAL				**$4,905,217**	

O&M Subcontractor Costs:

O&M Description	Number of Units	Unit	Unit Rate	TOTAL COST	
1st Quarterly Groundwater Monitoring Event					
Sample Analysis	1	Event	$1,500.00	$1,500	Estimate based on previous project experience
subtotal				**$1,500**	
2nd Quarterly Groundwater Monitoring Event					
Sample Analysis	1	Event	$1,500.00	$1,500	Estimate based on previous project experience
subtotal				**$1,500**	
3rd Quarterly Groundwater Monitoring Event					
Sample Analysis	1	Event	$1,500.00	$1,500	Estimate based on previous project experience
subtotal				**$1,500**	
4th Quarterly Groundwater Monitoring Event					
Sample Analysis	1	Event	$1,500.00	$1,500	Estimate based on previous project experience
subtotal				**$1,500**	
O&M Subcontractor Costs Subtotal				**$6,000**	
Subcontractor handling (1.67%)				**$100**	
O&M Subcontractor Costs TOTAL				**$6,344**	O&M will occur on the second year, therefore cost is escalated one year at 4%/year

Construction Disposal Costs:

Waste Disposal Description	Number of Units	Unit	Unit Rate	TOTAL COST	
Concrete disposal/recycling fee	1440	Ton	$65.00	$93,600	Verbal quote - Pacific States Environmental Contractors (2015)
Hazardous soil disposal	247	Ton	$546.00	$134,862	Email quote from Clean Harbors (2015). Incineration; Aragonite, Utah.
Treated water discharge to sanitary sewer	5,846,140	Gal	$0.0035	$20,461	Engineering estimate based on previous projects. Includes cooling tower water and excess extracted and treated groundwater.
NAPL disposal	4,600	Gal	$9.66	$44,436	Engineering estimate based on previous projects
subtotal				**$293,359**	
Total Disposal Costs				**$293,359**	

Construction Transportation Costs:

Waste Transportation Description	Number of Units	Unit	Unit Rate	TOTAL COST	
Concrete hauling	840	LCY	$33.00	$27,720	Verbal quote - Pacific States Environmental Contractors (2015)
Hazardous soil hauling	247	Ton	$201.00	$49,647	Email quote from Clean Harbors (2015). Intermodal transport to Aragonite, Uta
subtotal				**$77,367**	
Total Transportation Cost				**$77,367**	

EE/CA - AMCO
BASIS OF ESTIMATE SHEETS

O&M Disposal Costs:

Waste Disposal Description	Number of Units	Unit	Unit Rate	TOTAL COST	
Hazardous water disposal	4	Drum	$200.00	$800	Engineering estimate based on previous projects
subtotal				**$800**	
Subtotal O&M Disposal Costs				**$800**	
Total O&M Disposal Costs				**$832**	O&M will occur on the second year, therefore cost is escalated one year at 4%/year

O&M Transportation Costs:

Waste Transportation Description	Number of Units	Unit	Unit Rate	TOTAL COST	
Hazardous water hauling	4	Drum	$800.00	$3,200	Engineering estimate based on previous projects
subtotal				**$3,200**	
Subtotal O&M Transportation Cost				**$3,200**	
Subtotal O&M Transportation Cost				**$3,328**	O&M will occur on the second year, therefore cost is escalated one year at 4%/year

Other Direct Costs:

Item Description	Number of Units	Unit	Unit Rate	TOTAL COST
Portable sanitary station (week)	36	week	$165.00	$5,940
Truck Scales (Month)				$0
ODC's - Site Support				**$5,940**
Labor				$0
Equipment				$0
Material:				$0
ODC's				$0
Subcontractors				$0
ODC's - Rad H&S				**$0**
Total ODC Costs				**$5,940**

Contingency:

Basis of Contingency:
10% general contingency applied.

Percent Contingency: 10.0%

Total WBS Costs:

Total Construction Costs

Total Construction Labor Cost:	$632,972
Total Construction Material Cost:	$550,768
Total Construction Subcontractor Cost	$4,905,217
Total Construction Disposal Cost:	$293,359
Total Construction Transportation Cost:	$77,367
Total ODC:	$5,940
TOTAL CONSTRUCTION CAPITAL COST (Less Contingency):	$6,465,623
TOTAL CONTINGENCY COST:	$646,562
TOTAL CONSTRUCTION CAPITAL COST (With Contingency):	**$7,112,185**
Project Management (5%):	**$355,609**
Remedial Design (8%):	**$568,975**
Construction Management (6%):	**$426,731**
TOTAL CONSTRUCTION COST:	**$8,463,500**

Total O&M Costs

Total O&M Labor Cost:	$37,979
Total O&M Subcontractor Cost:	$6,344
Total O&M Material Cost:	$4,826
Total O&M Disposal Cost:	$832
Total O&M Transportation Cost:	$3,328
TOTAL O&M CAPITAL COST (Less Contingency):	$53,309
TOTAL CONTINGENCY COST:	$5,331
TOTAL O&M CAPITAL COST (With Contingency):	$58,640
Technical Support (10%)	**$5,864**
TOTAL O&M COST:	**$58,640**

TOTAL COSTS

TOTAL CONSTRUCTION COST:	**$8,463,500**
TOTAL O&M COST:	**$58,640**
TOTAL COST:	**$8,522,139.83**

Approvals:

Prepared By:		Date:	
Reviewed By:		Date:	
Approved By:		Date:	

APPENDIX D

Detailed Costing Spreadsheet, Alternative 5 – Enhanced In-Situ Bioremediation with Free Product Recovery

EE/CA - AMCO
BASIS OF ESTIMATE SHEETS

Statement of Work

Scope Description:

Alternative 5.
The scope of Alternative 5 involves implementing product recovery for three years followed by in-situ chlorinated VOC treatment for 5 years and volatile petroleum hydrocarbon treatment for 3 years. Total treatment duration is 11 years.

Judgemental Factors Applied In Projecting From Known Source Data to the Estimate:

Costs developed for this BOE were based upon recent company experience as well as subcontractor quotes (both written and verbal)

Key Assumptions (not in conflict with the WBS):

1) Soil conversion factor 1.75 (BCY to ton). 2) Concrete conversion factor 2.4 (BCY to ton). 3) 100% of soil and water waste generated will be hazardous; soil waste hauled to Aragonite, Utah for incineration. 4) A contingency equal to 10% of the total construction cost is added to account for unknowns.

Cost Elements

Construction Labor:

Item Description	Number of Units	Unit	Unit Price	TOTAL COST
Preliminary Work for Product Recovery - Year 1				
Preliminary Site Cleanup and Security Improvements				
Engineer-Mid	320	hr	$114.23	$36,554
Environmental Technician	320	hr	$71.37	$22,838
SSHO	320	hr	$114.01	$36,483
subtotal				**$95,875**
Remedial Design Data Collection				
Engineer-Mid	80	hr	$114.23	$9,138
SSHO	80	hr	$114.01	$9,121
Geologist-Mid	80	hr	$115.97	$9,278
subtotal				**$27,537**
Bench Testing				
Engineer-Mid	60	hr	$114.23	$6,854
SSHO	60	hr	$114.01	$6,841
subtotal				**$13,694**
Subsurface Component Installation				
Engineer-Mid	160	hr	$114.23	$18,277
SSHO	160	hr	$114.01	$18,242
Geologist-Mid	160	hr	$115.97	$18,555
subtotal				**$55,074**
Surface Component Mobilization and Installation				
Engineer-Mid	160	hr	$114.23	$18,277
SSHO	160	hr	$114.01	$18,242
subtotal				**$36,518**
Conveyance Piping Installation and Wellfield Completions				
Engineer-Mid	80	hr	$114.23	$9,138
SSHO	80	hr	$114.01	$9,121
subtotal				**$18,259**
System Integration and Testing				
Engineer-Mid	40	hr	$114.23	$4,569
SSHO	40	hr	$114.01	$4,560
subtotal				**$9,130**
Shakedown and Startup				
Engineer-Mid	80	hr	$114.23	$9,138
SSHO	80	hr	$114.01	$9,121
subtotal				**$18,259**
Product Recovery - Year 1				
Product Recovery				
Engineer-Mid	1,600	hr	$114.23	$182,768
SSHO	1,600	hr	$114.01	$182,416
subtotal				**$365,184**
Product Recovery - Year 2				
Product Recovery				
subtotal				**$365,184**
TOTAL (Escalated 1 year at 4%/year)				**$379,791**
Product Recovery - Year 3				
Product Recovery				
subtotal				**$365,184**
TOTAL (Escalated 2 years at 4%/year)				**$394,983**
Preliminary Work for EISB - Year 4				
Subsurface Component Installation				
Engineer-Mid	360	hr	$114.23	$41,123
SSHO	360	hr	$114.01	$41,044
Geologist-Mid	360	hr	$115.97	$41,749
subtotal				**$123,916**
TOTAL (Escalated 3 years at 4%/year)				**$139,388**
Surface Component Mobilization and Installation				
Engineer-Mid	160	hr	$114.23	$18,277
SSHO	160	hr	$114.01	$18,242
subtotal				**$36,518**
TOTAL (Escalated 3 years at 4%/year)				**$41,078**
Conveyance Piping Installation and Wellfield Completions				
Engineer-Mid	80	hr	$114.23	$9,138
SSHO	80	hr	$114.01	$9,121
subtotal				**$18,259**
TOTAL (Escalated 3 years at 4%/year)				**$20,539**
System Integration and Testing				
Engineer-Mid	40	hr	$114.23	$4,569
SSHO	40	hr	$114.01	$4,560
subtotal				**$9,130**
TOTAL (Escalated 3 years at 4%/year)				**$10,270**
Shakedown and Startup				
Engineer-Mid	40	hr	$114.23	$4,569
SSHO	40	hr	$114.01	$4,560
subtotal				**$9,130**
TOTAL (Escalated 3 years at 4%/year)				**$10,270**
Chlorinated Solvent Treatment - Year 4				
Chlorinated Solvent Treatment Injection Event				
Engineer-Mid	400	hr	$114.23	$45,692
SSHO	400	hr	$114.01	$45,604
Environmental Technician	400	hr	$71.37	$28,548
subtotal				**$119,844**
TOTAL (Escalated 3 years at 4%/year)				**$134,808**
Chlorinated Solvent Treatment - Year 6				
Chlorinated Solvent Treatment Injection Event				
subtotal				**$119,844**
TOTAL (Escalated 5 years at 4%/year)				**$145,809**
Chlorinated Solvent Treatment - Year 8				
Chlorinated Solvent Treatment Injection Event				
subtotal				**$119,844**
TOTAL (Escalated 7 years at 4%/year)				**$157,707**
Volatile Petroleum Hydrocarbon Treatment - Year 9				
Volatile Petroleum Hydrocarbon Treatment Injection Event				
Engineer-Mid	400	hr	$114.23	$45,692
SSHO	400	hr	$114.01	$45,604
Environmental Technician	400	hr	$71.37	$28,548
subtotal				**$119,844**
TOTAL (Escalated 8 years at 4%/year)				**$164,015**
Volatile Petroleum Hydrocarbon Treatment - Year 10				
Volatile Petroleum Hydrocarbon Treatment Injection Event				
subtotal				**$119,844**
TOTAL (Escalated 9 years at 4%/year)				**$170,575**
Volatile Petroleum Hydrocarbon Treatment - Year 11				
Volatile Petroleum Hydrocarbon Treatment Injection Event				
subtotal				**$119,844**
TOTAL (Escalated 10 years at 4%/year)				**$177,398**
Decommisioning and Demobilization - Year 11				
Post Treatment Groundwater Monitoring Event				
Engineer-Mid	40	hr	$114.23	$4,569
SSHO	40	hr	$114.01	$4,560
subtotal				**$9,130**
TOTAL (Escalated 10 years at 4%/year)				**$13,514**
Well Abandonment				
Engineer-Mid	320	hr	$114.23	$36,554
SSHO	320	hr	$114.01	$36,483
Geologist-Mid	320	hr	$115.97	$37,110
subtotal				**$110,147**
TOTAL (Escalated 10 years at 4%/year)				**$163,045**
Surface Component Decomissioning and Removal				
Engineer-Mid	80	hr	$114.23	$9,138
SSHO	80	hr	$114.01	$9,121
subtotal				**$18,259**
TOTAL (Escalated 10 years at 4%/year)				**$27,028**
Total Construction Labor Cost (Present Value)				**$2,789,748**

EE/CA - AMCO
BASIS OF ESTIMATE SHEETS

O&M Labor:

Item Description	Number of Units	Unit	Unit Price	TOTAL COST
Quarterly Monitoring - Year 5				
Four Quarterly Monitoring Events				
Engineer-Mid	160	hr	$114.23	$18,277
SSHO	160	hr	$114.01	$18,242
subtotal				**$36,518**
TOTAL (Escalated 4 years at 4%/year)				**$42,721**
Quarterly Monitoring - Year 7				
Four Quarterly Monitoring Events				
subtotal				**$36,518**
TOTAL (Escalated 6 years at 4%/year)				**$46,207**
Total O&M Labor Cost (Present Value)				**$88,929**

Construction Materials:

Item Description	Number of Units	Unit	Unit Price	TOTAL COST	
Preliminary Work for Product Recovery - Year 1					
PPE, Level D (day)	300	Person-Day	$10.00	$3,000	Estimate based on previous project experience
Misc disposable field equipment (lump)	2	Month	$1,000.00	$2,000	Estimate based on previous project experience
2,000 gallon product tank	1	Each	$8,808.00	$8,808	Online quote from Northern Tool (2014)
Pneumatic skimmers	22	Each	$2,912.00	$64,064	Cost from Xitech Instruments 2014 price list. 4" High Performance Smart Skimmer
Skimmer Controller	3	Each	$6,995.00	$20,985	Cost from Xitech Instruments 2014 price list. Remote Control Station 8 Skimmers + Shutoff
Air Compressor for skimmers	1	Each	$6,982.00	$6,982	Grainger price for 5-HP 3-ph compressor
Product conveyance piping	1	Lump	$20,000.00	$20,000	Engineering estimate based on previous project experience
subtotal				**$125,839**	
Product Recovery - Year 1					
PPE, Level D (day)	400	Person-Day	$10.00	$4,000	Estimate based on previous project experience
Misc disposable field equipment (lump)	12	Month	$1,000.00	$12,000	Estimate based on previous project experience
subtotal				**$16,000**	
Product Recovery - Year 2					
subtotal				**$16,000**	
TOTAL (Escalated 1 year at 4%/year)				**$16,640**	
Product Recovery - Year 3					
subtotal				**$16,000**	
TOTAL (Escalated 2 years at 4%/year)				**$17,306**	
Preliminary Work for EISB - Year 4					
PPE, Level D (day)	215	Person-Day	$10.00	$2,150	Estimate based on previous project experience
Misc disposable field equipment (lump)	3	Month	$1,000.00	$3,000	Estimate based on previous project experience
Water tanks (4000 gal)	3	Each	$4,000.00	$12,000	Estimate based on previous project experience
Inline Mixer	2	Each	$10,000.00	$20,000	Estimate based on previous project experience
Groundwater pumps w/ fittings and hose	3	Each	$3,324.00	$9,972	Quote provided by QED Environmental Systems (2014)
Air compressor for groundwater pumps	1	Each	$15,208.00	$15,208	Quote provided by American Compressor (2014)
Injection pumps w/ fittings and hoses	2	Each	$3,000.00	$6,000	Estimate based on previous project experience
subtotal				**$68,330**	
TOTAL (Escalated 3 years at 4%/year)				**$76,862**	
Chlorinated Solvent Treatment - Year 4					
PPE, Level D (day)	150	Person-Day	$10.00	$1,500	Estimate based on previous project experience
Misc disposable field equipment (lump)	4	Month	$1,000.00	$4,000	Estimate based on previous project experience
Sodium Lactate and Emulsified Veg Oil	24,000	CY Soil Treated	$3.00	$72,000	Cost estimated based on quote received from Remediation & Natural Attenuation Services, Inc. for similar project (2014)
subtotal				**$77,500**	
TOTAL (Escalated 3 years at 4%/year)				**$87,177**	
Chlorinated Solvent Treatment - Year 6					
subtotal				**$77,500**	
TOTAL (Escalated 5 years at 4%/year)				**$94,291**	
Chlorinated Solvent Treatment - Year 8					
subtotal				**$77,500**	
TOTAL (Escalated 7 years at 4%/year)				**$101,985**	
Volatile Petroleum Hydrocarbon Treatment - Year 9					
PPE, Level D (day)	150	Person-Day	$10.00	$1,500	Estimate based on previous project experience
Misc disposable field equipment (lump)	4	Month	$1,000.00	$4,000	Estimate based on previous project experience
Sulfate substrate	176,000	Pound	$1.00	$176,000	Email estimate from EOS Remediation, LLC. Mass estimated from previous project experience.
subtotal				**$181,500**	
TOTAL (Escalated 8 years at 4%/year)				**$248,395**	
Volatile Petroleum Hydrocarbon Treatment - Year 10					
subtotal				**$181,500**	
TOTAL (Escalated 9 years at 4%/year)				**$258,331**	
Volatile Petroleum Hydrocarbon Treatment - Year 11					
subtotal				**$181,500**	
TOTAL (Escalated 10 years at 4%/year)				**$268,664**	
Decommisioning and Demobilization - Year 11					
Post Treatment Groundwater Monitoring Event					
PPE, Level D (day)	150	Person-Day	$10.00	$1,500	Estimate based on previous project experience
Misc disposable field equipment (lump)	0	Month	$1,000.00	$250	Estimate based on previous project experience
Groundwater sampling equipment	1	Event	$1,000.00	$1,000	
subtotal				**$2,750**	
TOTAL (Escalated 10 years at 4%/year)				**$4,071**	
Well Abandonment					
PPE, Level D (day)	120	Person-Day	$10.00	$1,200	Estimate based on previous project experience
Misc disposable field equipment (lump)	2	Month	$1,000.00	$2,000	Estimate based on previous project experience
subtotal				**$3,200**	
TOTAL (Escalated 10 years at 4%/year)				**$4,737**	
Surface Component Decomissioning and Removal					
PPE, Level D (day)	20	Person-Day	$10.00	$200	Estimate based on previous project experience
Misc disposable field equipment (lump)	1	Month	$1,000.00	$500	Estimate based on previous project experience
subtotal				**$700**	
TOTAL (Escalated 10 years at 4%/year)				**$1,036**	
Total Construction Material Cost (Present Value)				**$1,227,043**	

O&M Materials:

Item Description	Number of Units	Unit	Unit Price	TOTAL COST	
Quarterly Monitoring - Year 5					
Four Quarterly Monitoring Events					
PPE, Level D (day)	150	Person-Day	$10.00	$1,500	Estimate based on previous project experience
Misc disposable field equipment (lump)	1	Month	$1,000.00	$1,000	Estimate based on previous project experience
Groundwater sampling equipment	4	Event	$1,000.00	$4,000	
subtotal				**$6,500**	
TOTAL (Escalated 4 years at 4%/year)				**$7,604**	
Quarterly Monitoring - Year 7					
Four Quarterly Monitoring Events					
subtotal				**$6,500**	
TOTAL (Escalated 6 years at 4%/year)				**$8,225**	
Total O&M Material Cost (Present Value)				**$15,829**	

EE/CA - AMCO
BASIS OF ESTIMATE SHEETS

Construction Subcontractor Costs:

Construction Description	Number of Units	Unit	Unit Rate	TOTAL COST	
Preliminary Work for Product Recovery - Year 1					
Preliminary Site Cleanup and Security Improvements					
Utility Clearance	1	Lump	$2,000.00	$2,000	Estimate based on previous project experience
Install security fencing	840	LF	$6.82	$5,729	Verbal Quote - National Construction Rentals (2014)
Install security system	1	Lump	$15,000.00	$15,000	Estimate based on previous project experience
Power Drop	1	Lump	$85,000.00	$85,000	Estimate provided by McMillan-Mcgee Corp (2014)
Demolish exitsting concrete layer	600	BCY	$140.00	$84,000	Verbal quote - Pacific States Environmental Contractors (2015)
Load concrete	840	LCY	$5.00	$4,200	Verbal quote - Pacific States Environmental Contractors (2015)
Dust and vapor control	10	Day	$1,500.00	$15,000	Estimate based on previous project experience
Sampling and testing	16	Each	$550.00	$8,800	Estimate based on previous project experience
Traffic Control	1	Month	$2,000.00	$2,000	Estimate based on previous project experience
Demo existing structure and SVE	1	Lump	$25,000.00	$25,000	Estimate based on previous project experience
Security Guard	1	month	$8,000.00	$8,000	Quote from California Private Patrol (2014)
Security System	1	Month	$1,000.00	$1,000	Quote from Core1 Security Services (2014)
subtotal				**$255,729**	
Remedial Design Data Collection					
Data collection (drilling and sampling)	1	Lump	$75,000.00	$75,000	Estimated based on previous project experience
subtotal				**$75,000**	
Bench Testing					
Bench Testing (all inclusive)	1	Lump	$50,000.00	$50,000	Estimated based on previous project experience
subtotal				**$50,000**	
Subsurface Component Installation					
Product recovery well installation	990	LF	$110.00	$108,900	Estimated based on previous project experience
Groundwater monitoring well installation	400	LF	$110.00	$44,000	Estimated based on previous project experience
Traffic Control	1	Month	$2,000.00	$2,000	Estimate based on previous project experience
Security Guard	1	month	$8,000.00	$8,000	Quote from California Private Patrol (2014)
Security System	1	Month	$1,000.00	$1,000	Quote from Core1 Security Services (2014)
subtotal				**$163,900**	
Surface Component Mobilization and Installation					
Traffic Control	1	Month	$2,000.00	$2,000	Estimate based on previous project experience
Security Guard	1	month	$8,000.00	$8,000	Quote from California Private Patrol (2014)
Security System	1	Month	$1,000.00	$1,000	Quote from Core1 Security Services (2014)
subtotal				**$11,000**	
Conveyance Piping Installation and Wellfield Completions					
Traffic Control	0.5	Month	$2,000.00	$1,000	Estimate based on previous project experience
Security Guard	0.5	month	$8,000.00	$4,000	Quote from California Private Patrol (2014)
Security System	0.5	Month	$1,000.00	$500	Quote from Core1 Security Services (2014)
subtotal				**$5,500**	
System Integration and Testing					
Traffic Control	0.50	Month	$2,000.00	$1,000	Estimate based on previous project experience
Security Guard	0.50	month	$8,000.00	$4,000	Quote from California Private Patrol (2014)
Security System	0.50	Month	$1,000.00	$500	Quote from Core1 Security Services (2014)
subtotal				**$5,500**	
Shakedown and Startup					
Traffic Control	0.25	Month	$2,000.00	$500	Estimate based on previous project experience
Security Guard	0.25	month	$8,000.00	$2,000	Quote from California Private Patrol (2014)
Security System	0.25	Month	$1,000.00	$250	Quote from Core1 Security Services (2014)
subtotal				**$2,750**	
Product Recovery - Year 1					
Product Recovery					
Traffic Control	12.00	Month	$2,000.00	$24,000	Estimate based on previous project experience
Security System	12.00	Month	$1,000.00	$12,000	Quote from Core1 Security Services (2014)
subtotal				**$36,000**	
Product Recovery - Year 2					
Product Recovery					
subtotal				**$36,000**	
TOTAL (Escalated 1 year at 4%/year)				**$37,440**	
Product Recovery - Year 3					
Product Recovery					
subtotal				**$36,000**	
TOTAL (Escalated 2 years at 4%/year)				**$38,938**	
Preliminary Work for EISB - Year 4					
Subsurface Component Installation					
Extraction/Injection well installation	1,500	LF	$110.00	$165,000	Estimate based on previous project experience
Traffic Control	2.00	Month	$2,000.00	$4,000	Estimate based on previous project experience
Security Guard	2.00	month	$8,000.00	$16,000	Quote from California Private Patrol (2014)
Security System	2.00	Month	$1,000.00	$2,000	Quote from Core1 Security Services (2014)
subtotal				**$187,000**	
TOTAL (Escalated 3 years at 4%/year)				**$210,350**	
Surface Component Mobilization and Installation					
Traffic Control	1.00	Month	$2,000.00	$2,000	Estimate based on previous project experience
Security Guard	1.00	month	$8,000.00	$8,000	Quote from California Private Patrol (2014)
Security System	1.00	Month	$1,000.00	$1,000	Quote from Core1 Security Services (2014)
subtotal				**$11,000**	
TOTAL (Escalated 3 years at 4%/year)				**$12,374**	
Conveyance Piping Installation and Wellfield Completions					
Traffic Control	0.50	Month	$2,000.00	$1,000	Estimate based on previous project experience
Security Guard	0.50	month	$8,000.00	$4,000	Quote from California Private Patrol (2014)
Security System	0.50	Month	$1,000.00	$500	Quote from Core1 Security Services (2014)
subtotal				**$5,500**	
TOTAL (Escalated 3 years at 4%/year)				**$6,187**	
System Integration and Testing					
Traffic Control	0.25	Month	$2,000.00	$500	Estimate based on previous project experience
Security Guard	0.25	month	$8,000.00	$2,000	Quote from California Private Patrol (2014)
Security System	0.25	Month	$1,000.00	$250	Quote from Core1 Security Services (2014)
subtotal				**$2,750**	
TOTAL (Escalated 3 years at 4%/year)				**$3,093**	
Shakedown and Startup					
Traffic Control	0.25	Month	$2,000.00	$500	Estimate based on previous project experience
Security Guard	0.25	month	$8,000.00	$2,000	Quote from California Private Patrol (2014)
Security System	0.25	Month	$1,000.00	$250	Quote from Core1 Security Services (2014)
subtotal				**$2,750**	
TOTAL (Escalated 3 years at 4%/year)				**$3,093**	
Chlorinated Solvent Treatment - Year 4					
Chlorinated Solvent Treatment Injection Event					
Traffic Control	2.00	Month	$2,000.00	$4,000	Estimate based on previous project experience
Security Guard	2.00	month	$8,000.00	$16,000	Quote from California Private Patrol (2014)
Security System	12.00	Month	$1,000.00	$12,000	Quote from Core1 Security Services (2014)
subtotal				**$32,000**	
TOTAL (Escalated 3 years at 4%/year)				**$35,996**	
Chlorinated Solvent Treatment - Year 6					
Chlorinated Solvent Treatment Injection Event					
subtotal				**$32,000**	
TOTAL (Escalated 5 years at 4%/year)				**$38,933**	
Chlorinated Solvent Treatment - Year 8					
Chlorinated Solvent Treatment Injection Event					
subtotal				**$32,000**	
TOTAL (Escalated 7 years at 4%/year)				**$42,110**	
Volatile Petroleum Hydrocarbon Treatment - Year 9					
Volatile Petroleum Hydrocarbon Treatment Injection Event					
Traffic Control	2.00	Month	$2,000.00	$4,000	Estimate based on previous project experience
Security Guard	2.00	month	$8,000.00	$16,000	Quote from California Private Patrol (2014)
Security System	12.00	Month	$1,000.00	$12,000	Quote from Core1 Security Services (2014)
subtotal				**$32,000**	
TOTAL (Escalated 8 years at 4%/year)				**$43,794**	
Volatile Petroleum Hydrocarbon Treatment - Year 10					
Volatile Petroleum Hydrocarbon Treatment Injection Event					
subtotal				**$32,000**	
TOTAL (Escalated 9 years at 4%/year)				**$45,546**	
Volatile Petroleum Hydrocarbon Treatment - Year 11					
Volatile Petroleum Hydrocarbon Treatment Injection Event					
subtotal				**$32,000**	
TOTAL (Escalated 10 years at 4%/year)				**$47,368**	
Decommisioning and Demobilization - Year 11					
Post Treatment Groundwater Monitoring Event					
Laboratory analysis	1	Event	$1,500.00	$1,500	Estimate based on previous project experience
subtotal				**$1,500**	
TOTAL (Escalated 10 years at 4%/year)				**$2,220**	
Well Abandonment					
Well Abandonment (overdrill)	2,490	LF	$90.00	$224,100	Estimate based on previous project experience
Traffic Control	2.00	Month	$2,000.00	$4,000	Estimate based on previous project experience
Security Guard	2.00	month	$8,000.00	$16,000	Quote from California Private Patrol (2014)
Security System	2.00	Month	$1,000.00	$2,000	Quote from Core1 Security Services (2014)
subtotal				**$246,100**	
TOTAL (Escalated 10 years at 4%/year)				**$364,288**	
Surface Component Decomissioning and Removal					
Security Guard	0.50	month	$8,000.00	$4,000	Quote from California Private Patrol (2014)
Security System	0.50	Month	$1,000.00	$500	Quote from Core1 Security Services (2014)
subtotal				**$4,500**	
TOTAL (Escalated 10 years at 4%/year)				**$6,661**	
Construction Subcontractor Costs Subtotal (Present Value)				**$1,520,419**	
Subcontractor handling (1.67%)				**$25,391**	
Construction Subcontractor Costs TOTAL (Present Value)				**$1,545,810**	

EE/CA - AMCO
BASIS OF ESTIMATE SHEETS

O&M Subcontractor Costs:

Quarterly Monitoring - Year 5					
Four Quarterly Monitoring Events					
Lab analysis	4	Event	$1,500.00	$6,000	Estimate based on previous project experience
Security System	2.00	Month	$1,000.00	$2,000	Quote from Core1 Security Services (2014)
subtotal				**$8,000**	
TOTAL (Escalated 4 years at 4%/year)				**$9,359**	
Quarterly Monitoring - Year 7					
Four Quarterly Monitoring Events					
subtotal				**$8,000**	
TOTAL (Escalated 6 years at 4%/year)				**$10,123**	
O&M Subcontractor Costs Subtotal (Present Value)				**$19,481**	
Subcontractor handling (1.67%)				**$325**	
O&M Subcontractor Costs TOTAL (Present Value)				**$19,807**	

Construction Disposal Costs:

Waste Disposal Description	Number of Units	Unit	Unit Rate	TOTAL COST	
Preliminary Work for Product Recovery - Year 1					
Concrete disposal/recycling fee	1440	Ton	$65.00	$93,600	Verbal quote - Pacific States Environmental Contractors (2015)
Hazardous soil disposal	266	Ton	$546.00	$145,236	Email quote from Clean Harbors (2015). Incineration; Aragonite, Utah.
subtotal				**$238,836**	
Product Recovery - Year 3					
NAPL disposal	4,600	Gal	$9.66	$44,436	Engineering estimate based on previous projects
subtotal				**$44,436**	
TOTAL (Escalated 2 years at 4%/year)				**$48,062**	
Total Disposal Costs				**$286,898**	

Construction Transportation Costs:

Waste Transportation Description	Number of Units	Unit	Unit Rate	TOTAL COST	
Preliminary Work for Product Recovery - Year 1					
Concrete hauling	840	LCY	$33.00	$27,720	Verbal quote - Pacific States Environmental Contractors (2015)
Hazardous soil Hauling	266	Ton	$201.00	$53,466	Email quote from Clean Harbors (2015). Intermodal transport to Aragonite, Utah.
subtotal				**$81,186**	
Product Recovery - Year 3					
NAPL hauling	15	ton	$201.00	$3,015	Assumed similar to hazardous soil hauling. Clean Harbors quote (2015)
subtotal				**$3,015**	
TOTAL (Escalated 2 years at 4%/year)				**$3,261**	
Total Transportation Cost				**$84,447**	

O&M Disposal Costs:

Waste Disposal Description	Number of Units	Unit	Unit Rate	TOTAL COST	
Quarterly Monitoring - Year 5					
Four Quarterly Monitoring Events					
Hazardous water disposal	4	Drum	$200.00	$800	Estimate based on previous project experience
subtotal				**$800**	
TOTAL (Escalated 4 years at 4%/year)				**$936**	
Quarterly Monitoring - Year 7					
Four Quarterly Monitoring Events					
subtotal				**$800**	
TOTAL (Escalated 6 years at 4%/year)				**$1,012**	
Total O&M Disposal Costs (Present Value)				**$1,948**	

O&M Transportation Costs:

Waste Transportation Description	Number of Units	Unit	Unit Rate	TOTAL COST	
Quarterly Monitoring - Year 5					
Four Quarterly Monitoring Events					
Hazardous water hauling	4	Drum	$800.00	$3,200	Estimate based on previous project experience
subtotal				**$3,200**	
TOTAL (Escalated 4 years at 4%/year)				**$3,744**	
Quarterly Monitoring - Year 7					
Four Quarterly Monitoring Events					
subtotal				**$3,200**	
TOTAL (Escalated 6 years at 4%/year)				**$4,049**	
Total O&M Disposal Costs (Present Value)				**$7,793**	

Other Direct Costs:

Item Description	Number of Units	Unit	Unit Rate	TOTAL COST
Portable sanitary station (week)	36	week	$165.00	$5,940
Truck Scales (Month)				$0
ODC's - Site Support				**$5,940**
Labor				$0
Equipment				$0
Material:				$0
ODC's				$0
Subcontractors				$0
ODC's - Rad H&S				**$0**
Total ODC Costs				**$5,940**

Contingency:

Basis of Contingency:
10% general contingency applied.

Percent Contingency: 10.0%

Total WBS Costs:

Total Construction Costs

Total Construction Labor Cost:	$2,789,748
Total Construction Material Cost:	$1,227,043
Total Construction Subcontractor Cost	$1,545,810
Total Construction Disposal Cost:	$286,898
Total Construction Transportation Cost:	$84,447
Total ODC:	$5,940
TOTAL CONSTRUCTION CAPITAL COST (Less Contingency):	$5,939,886
TOTAL CONTINGENCY COST:	$593,989
TOTAL CONSTRUCTION CAPITAL COST (With Contingency):	**$6,533,875**
Project Management (5%):	**$326,694**
Remedial Design (8%):	**$522,710**
Construction Management (6%):	**$392,032**
TOTAL CONSTRUCTION COST:	**$7,775,311**

Total O&M Costs

Total O&M Labor Cost:	$88,929
Total O&M Subcontractor Cost:	$19,807
Total O&M Material Cost:	$15,829
Total O&M Disposal Cost:	$1,948
Total O&M Transportation Cost:	$7,793
TOTAL O&M CAPITAL COST (Less Contingency):	$134,305
TOTAL CONTINGENCY COST:	$13,430
TOTAL O&M CAPITAL COST (With Contingency):	$147,735
Technical Support (10%)	**$14,774**
TOTAL O&M COST:	**$147,735**

TOTAL COSTS

TOTAL CONSTRUCTION COST:	**$7,775,311**
TOTAL O&M COST:	**$58,640**
TOTAL COST:	**$7,833,950.73**

Approvals:			
Prepared By:		Date:	
Reviewed By:		Date:	
Approved By:		Date:	

APPENDIX E

Detailed Costing Spreadsheet, Alternative 6 – Free Product Removal Followed by Air Sparging Soil and Soil Vapor Extraction

EE/CA - AMCO
BASIS OF ESTIMATE SHEETS

Statement of Work

Scope Description:

Alternative 6.
The scope of Alternative 6 involves implementing product recovery within the treatment area for a period of three years, followed by four years of air sparging and soil vapor extraction.

Judgemental Factors Applied In Projecting From Known Source Data to the Estimate:

Costs developed for this BOE were based upon recent company experience as well as subcontractor quotes (both written and verbal)

Key Assumptions (not in conflict with the WBS):

1) Soil conversion factor 1.75 (BCY to ton). 2) Concrete conversion factor 2.4 (BCY to ton). 3) 100% of soil and water waste generated will be hazardous; soil waste hauled to Aragonite, Utah for incineration. 4) A contingency equal to 10% of the total construction cost is added to account for unknowns.

Cost Elements

Construction Labor:

Item Description	Number of Units	Unit	Unit Price	TOTAL COST
Preliminary Work for Product Recovery - Year 1				
Preliminary Site Cleanup and Security Improvements				
Engineer-Mid	400	hr	$114.23	$45,692
Environmental Technician	400	hr	$71.37	$28,548
SSHO	400	hr	$114.01	$45,604
subtotal				**$119,844**
Remedial Design Data Collection				
Engineer-Mid	80	hr	$114.23	$9,138
SSHO	80	hr	$114.01	$9,121
Geologist-Mid	80	hr	$115.97	$9,278
subtotal				**$27,537**
Pilot Testing				
Engineer-Mid	160	hr	$114.23	$18,277
SSHO	160	hr	$114.01	$18,242
Geologist-Mid	50	hr	$115.97	$5,799
subtotal				**$42,317**
Subsurface Component Installation				
Engineer-Mid	160	hr	$114.23	$18,277
SSHO	160	hr	$114.01	$18,242
Geologist-Mid	160	hr	$115.97	$18,555
subtotal				**$55,074**
Surface Component Mobilization and Installation				
Engineer-Mid	160	hr	$114.23	$18,277
SSHO	160	hr	$114.01	$18,242
subtotal				**$36,518**
Conveyance Piping Installation and Wellfield Completions				
Engineer-Mid	80	hr	$114.23	$9,138
SSHO	80	hr	$114.01	$9,121
subtotal				**$18,259**
System Integration and Testing				
Engineer-Mid	40	hr	$114.23	$4,569
SSHO	40	hr	$114.01	$4,560
subtotal				**$9,130**
Shakedown and Startup				
Engineer-Mid	80	hr	$114.23	$9,138
SSHO	80	hr	$114.01	$9,121
subtotal				**$18,259**
Product Recovery - Year 1				
Product Recovery				
Engineer-Mid	1,600	hr	$114.23	$182,768
SSHO	1,600	hr	$114.01	$182,416
subtotal				**$365,184**
Product Recovery - Year 2				
Product Recovery				
subtotal				**$365,184**
TOTAL (Escalated 1 year at 4%/year)				**$379,791**
Product Recovery - Year 3				
Product Recovery				
subtotal				**$365,184**
TOTAL (Escalated 2 years at 4%/year)				**$394,983**
Preliminary Work for AS/SVE - Year 4				
Subsurface Component Installation				
Engineer-Mid	360	hr	$114.23	$41,123
SSHO	360	hr	$114.01	$41,044
Geologist-Mid	360	hr	$115.97	$41,749
subtotal				**$123,916**
TOTAL (Escalated 3 years at 4%/year)				**$139,388**
Surface Component Mobilization and Installation				
Engineer-Mid	160	hr	$114.23	$18,277
SSHO	160	hr	$114.01	$18,242
subtotal				**$36,518**
TOTAL (Escalated 3 years at 4%/year)				**$41,078**
Conveyance Piping Installation and Wellfield Completions				
Engineer-Mid	160	hr	$114.23	$18,277
SSHO	160	hr	$114.01	$18,242
subtotal				**$36,518**
TOTAL (Escalated 3 years at 4%/year)				**$41,078**
System Integration and Testing				
Engineer-Mid	40	hr	$114.23	$4,569
SSHO	40	hr	$114.01	$4,560
subtotal				**$9,130**
TOTAL (Escalated 3 years at 4%/year)				**$10,270**
Shakedown and Startup				
Engineer-Mid	40	hr	$114.23	$4,569
SSHO	40	hr	$114.01	$4,560
subtotal				**$9,130**
TOTAL (Escalated 3 years at 4%/year)				**$10,270**
AS/SVE System Operation - Year 4				
Engineer-Mid	1,800	hr	$114.23	$205,614
SSHO	1,800	hr	$114.01	$205,218
subtotal				**$410,832**
TOTAL (Escalated 3 years at 4%/year)				**$462,130**
AS/SVE System Operation - Year 5				
subtotal				**$410,832**
TOTAL (Escalated 4 years at 4%/year)				**$480,615**
AS/SVE System Operation - Year 6				
subtotal				**$410,832**
TOTAL (Escalated 5 years at 4%/year)				**$499,840**
AS/SVE System Operation - Year 7				
subtotal				**$410,832**
TOTAL (Escalated 6 years at 4%/year)				**$519,834**
Post Shut-Down Groundwater Sampling, System Demo, and Demobilization - Year 8				
Post Shut-Down Groundwater Sampling				
Engineer-Mid	40	hr	$114.23	$4,569
SSHO	40	hr	$114.01	$4,560
subtotal				**$9,130**
TOTAL (Escalated 7 years at 4%/year)				**$12,014**
Well Destruction and Conveyance Piping Abandonment				
Engineer-Mid	320	hr	$114.23	$36,554
Geologist-Mid	320	hr	$115.97	$37,110
SSHO	320	hr	$114.01	$36,483
subtotal				**$110,147**
TOTAL (Escalated 7 years at 4%/year)				**$144,946**
Surface Component Decomissioning and Removal				
Engineer-Mid	320	hr	$114.23	$36,554
SSHO	320	hr	$114.01	$36,483
subtotal				**$73,037**
TOTAL (Escalated 7 years at 4%/year)				**$96,111**
Total Construction Labor Cost (Present Value)				**$3,924,470**

O&M Labor:

Item Description	Number of Units	Unit	Unit Price	TOTAL COST
Quarterly Monitoring - Year 8				
Four Quarterly Monitoring Events				
Engineer-Mid	160	hr	$114.23	$18,277
SSHO	160	hr	$114.01	$18,242
subtotal				**$36,518**
TOTAL (Escalated 7 years at 4%/year)				**$48,056**
Total O&M Labor Cost (Present Value)				**$48,056**

EE/CA - AMCO
BASIS OF ESTIMATE SHEETS

Construction Materials:

Item Description	Number of Units	Unit	Unit Price	TOTAL COST	
Preliminary Work for Product Recovery - Year 1					
PPE, Level D (day)	300	Person-Day	$10.00	$3,000	Estimate based on previous project experience
Misc disposable field equipment (lump)	2	Month	$1,000.00	$2,000	Estimate based on previous project experience
2,000 gallon product tank	1	Each	$8,808.00	$8,808	Online quote from Northern Tool (2014)
Pneumatic skimmers	22	Each	$2,912.00	$64,064	Cost from Xitech Instruments 2014 price list. 4" High Performance Smart Skim
					Cost from Xitech Instruments 2014 price list. Remote Control Station 8
Skimmer Controller	3	Each	$6,995.00	$20,985	Skimmers + Shutoff
Air Compressor for skimmers	1	Each	$6,982.00	$6,982	Grainger price for 5-HP 3-ph compressor
Product conveyance piping	1	Lump	$20,000.00	$20,000	Engineering estimate based on previous project experience
subtotal				**$125,839**	
Product Recovery - Year 1					
PPE, Level D (day)	400	Person-Day	$10.00	$4,000	Estimate based on previous project experience
Misc disposable field equipment (lump)	12	Month	$1,000.00	$12,000	Estimate based on previous project experience
subtotal				**$16,000**	
Product Recovery - Year 2					
subtotal				**$16,000**	
TOTAL (Escalated 1 year at 4%/year)				**$16,640**	
Product Recovery - Year 3					
subtotal				**$16,000**	
TOTAL (Escalated 2 years at 4%/year)				**$17,306**	
Preliminary Work for AS/SVE - Year 4					
PPE, Level D (day)	215	Person-Day	$10.00	$2,150	Estimate based on previous project experience
Misc disposable field equipment (lump)	4	Month	$1,000.00	$4,000	Estimate based on previous project experience
AS/SVE skid	1	Lump	$83,550.00	$83,550	Cost estimated based on 2012 build of similar system (escalated 2 years)
Pipe and fittings for AS/SVE system	1	Lump	$13,000.00	$13,000	Cost estimated based on 2012 build of similar system (escalated 2 years)
Condensate water tank	1	Each	$2,000.00	$2,000	Estimate based on previous project experience
Vapor phase GAC	2	Each	$4,000.00	$8,000	500-lb units with initial carbon. Estimate based on previous project experience
Noise dampening enclosures for equipment	1	Lump	$100,000.00	$100,000	Estimate based on previous project experience
subtotal				**$212,700**	
TOTAL (Escalated 3 years at 4%/year)				**$239,259**	
AS/SVE operation - Year 4					
PPE, Level D (day)	225	Person-Day	$10.00	$2,250	Estimate based on previous project experience
Misc disposable field equipment (lump)	12	Month	$1,000.00	$12,000	Estimate based on previous project experience
Groundwater sampling equipment	4	Event	$1,000.00	$4,000	Estimate based on previous project experience
subtotal				**$18,250**	
TOTAL (Escalated 3 years at 4%/year)				**$20,529**	
AS/SVE operation - Year 5					
subtotal				**$18,250**	
TOTAL (Escalated 4 years at 4%/year)				**$21,350**	
AS/SVE operation - Year 6					
subtotal				**$18,250**	
TOTAL (Escalated 5 years at 4%/year)				**$22,204**	
AS/SVE operation - Year 7					
subtotal				**$18,250**	
TOTAL (Escalated 6 years at 4%/year)				**$23,092**	
Post Shut-Down Groundwater Sampling, System Demo, and Demobilization - Year 8					
PPE, Level D (day)	300	Person-Day	$10.00	$3,000	Estimate based on previous project experience
Misc disposable field equipment (lump)	3	Month	$1,000.00	$3,000	Estimate based on previous project experience
Groundwater sampling equipment	1	Event	$1,000.00	$1,000	Estimate based on previous project experience
subtotal				**$7,000**	
TOTAL (Escalated 7 years at 4%/year)				**$9,212**	
Total Construction Material Cost (Present Value)				**$511,429**	

O&M Materials:

Item Description	Number of Units	Unit	Unit Price	TOTAL COST	
Quarterly Monitoring - Year 8					
Four Quarterly Monitoring Events					
PPE, Level D (day)	150	Person-Day	$10.00	$1,500	Estimate based on previous project experience
Misc disposable field equipment (lump)	1	Month	$1,000.00	$1,000	Estimate based on previous project experience
Groundwater sampling equipment	4	Event	$1,000.00	$4,000	Estimate based on previous project experience
subtotal				**$6,500**	
TOTAL (Escalated 7 years at 4%/year)				**$8,554**	
Total O&M Material Cost (Present Value)				**$8,554**	

Construction Subcontractor Costs:

Construction Description	Number of Units	Unit	Unit Rate	TOTAL COST	
Preliminary Work for Product Recovery - Year 1					
Preliminary Site Cleanup and Security Improvements					
Utility Clearance	1	Lump	$2,000.00	$2,000	Estimate based on previous project experience
Install security fencing	840	LF	$6.82	$5,729	Verbal Quote - National Construction Rentals (2014)
Install security system	1	Lump	$15,000.00	$15,000	Estimate based on previous project experience
Power Drop	1	Lump	$85,000.00	$85,000	Estimate provided by McMillan-Mcgee Corp (2014)
Demolish exitsting concrete layer	600	BCY	$140.00	$84,000	Verbal quote - Pacific States Environmental Contractors (2015)
Load concrete	840	LCY	$5.00	$4,200	Verbal quote - Pacific States Environmental Contractors (2015)
Dust and vapor control	10	Day	$1,500.00	$15,000	Estimate based on previous project experience
Sampling and testing	16	Each	$550.00	$8,800	Estimate based on previous project experience
Install vapor cap	1	Lump	$85,000.00	$85,000	Estimate provided by McMillan-Mcgee Corp (2014)
Traffic Control	1	Month	$2,000.00	$2,000	Estimate based on previous project experience
Demo existing structure and SVE	1	Lump	$25,000.00	$25,000	Estimate based on previous project experience
Security Guard	1	month	$8,000.00	$8,000	Quote from California Private Patrol (2014)
Security System	1	Month	$1,000.00	$1,000	Quote from Core1 Security Services (2014)
subtotal				**$340,729**	
Remedial Design Data Collection					
Data collection (drilling and sampling)	1	Lump	$75,000.00	$75,000	Estimated based on previous project experience
subtotal				**$75,000**	
Pilot Testing					
AS/SVE Pilot Testing (all inclusive)	1	Lump	$175,000.00	$175,000	Estimated based on similar pilot study conducted in 2012. Includes all subs an
subtotal				**$175,000**	
Subsurface Component Installation					
Product recovery well installation	990	LF	$110.00	$108,900	Estimated based on previous project experience
Groundwater monitoring well installation	400	LF	$110.00	$44,000	Estimated based on previous project experience
Traffic Control	1	Month	$2,000.00	$2,000	Estimate based on previous project experience
Security Guard	1	month	$8,000.00	$8,000	Quote from California Private Patrol (2014)
Security System	1	Month	$1,000.00	$1,000	Quote from Core1 Security Services (2014)
subtotal				**$163,900**	
Surface Component Mobilization and Installation					
Traffic Control	1	Month	$2,000.00	$2,000	Estimate based on previous project experience
Security Guard	1	month	$8,000.00	$8,000	Quote from California Private Patrol (2014)
Security System	1	Month	$1,000.00	$1,000	Quote from Core1 Security Services (2014)
subtotal				**$11,000**	
Conveyance Piping Installation and Wellfield Completions					
Traffic Control	0.5	Month	$2,000.00	$1,000	Estimate based on previous project experience
Security Guard	0.5	month	$8,000.00	$4,000	Quote from California Private Patrol (2014)
Security System	0.5	Month	$1,000.00	$500	Quote from Core1 Security Services (2014)
subtotal				**$5,500**	
System Integration and Testing					
Traffic Control	0.50	Month	$2,000.00	$1,000	Estimate based on previous project experience
Security Guard	0.50	month	$8,000.00	$4,000	Quote from California Private Patrol (2014)
Security System	0.50	Month	$1,000.00	$500	Quote from Core1 Security Services (2014)
subtotal				**$5,500**	
Shakedown and Startup					
Traffic Control	0.25	Month	$2,000.00	$500	Estimate based on previous project experience
Security Guard	0.25	month	$8,000.00	$2,000	Quote from California Private Patrol (2014)
Security System	0.25	Month	$1,000.00	$250	Quote from Core1 Security Services (2014)
subtotal				**$2,750**	
Product Recovery - Year 1					
Security System	12.00	Month	$1,000.00	$12,000	Quote from Core1 Security Services (2014)
subtotal				**$12,000**	
Product Recovery - Year 2					
subtotal				**$12,000**	
TOTAL (Escalated 1 year at 4%/year)				**$12,480**	
Product Recovery - Year 3					
subtotal				**$12,000**	
TOTAL (Escalated 2 years at 4%/year)				**$12,979**	

EE/CA - AMCO
BASIS OF ESTIMATE SHEETS

Preliminary Work for AS/SVE - Year 4					
Subsurface Component Installation					
AS well installation	2,860	LF	$150.00	$429,000	Estimate based on previous project experience
Horivontal SVE well installation and trenching	1	Lump	$317,921.00	$317,921	Cost estimated based on 2012 build of similar system (escalated 2 years)
Traffic Control	2.00	Month	$2,000.00	$4,000	Estimate based on previous project experience
Security Guard	2.00	month	$8,000.00	$16,000	Quote from California Private Patrol (2014)
Security System	2.00	Month	$1,000.00	$2,000	Quote from Core1 Security Services (2014)
subtotal				**$768,921**	
TOTAL (Escalated 3 years at 4%/year)				**$864,932**	
Surface Component Mobilization and Installation					
Mobilize and install vapor treatment system	1	Lump	$17,000.00	$17,000	Quote provided by GEO, Inc (2014)
Traffic Control	1.00	Month	$2,000.00	$2,000	Estimate based on previous project experience
Security Guard	1.00	month	$8,000.00	$8,000	Quote from California Private Patrol (2014)
Security System	1.00	Month	$1,000.00	$1,000	Quote from Core1 Security Services (2014)
subtotal				**$28,000**	
TOTAL (Escalated 3 years at 4%/year)				**$31,496**	
Conveyance Piping Installation and Wellfield Completions					
Piping and manifold installation	1	Lump	$100,000.00	$100,000	Cost estimated based on 2012 build of similar system (escalated 2 years)
Traffic Control	0.50	Month	$2,000.00	$1,000	Estimate based on previous project experience
Security Guard	0.50	month	$8,000.00	$4,000	Quote from California Private Patrol (2014)
Security System	0.50	Month	$1,000.00	$500	Quote from Core1 Security Services (2014)
subtotal				**$105,500**	
TOTAL (Escalated 3 years at 4%/year)				**$118,673**	
System Integration and Testing					
GEO, Inc operator on site	5	day	$750.00	$3,750	Quote provided by GEO, Inc (2014)
Electrical usage for vapor treatment	24,192	KWH	$0.18	$4,265	One week of electricity for vapor treatment system. Usage based on GEO, Inc. quote (2014).
Electrical usage for air compresser	5,796	KWH	$0.18	$1,022	Kaeser ASD-40 with refrigerated dryer draws 34.5 KW, or 828 KWH/day (per manufacturer)
Traffic Control	0.25	Month	$2,000.00	$500	Estimate based on previous project experience
Security Guard	0.25	month	$8,000.00	$2,000	Quote from California Private Patrol (2014)
Security System	0.25	Month	$1,000.00	$250	Quote from Core1 Security Services (2014)
subtotal				**$11,787**	
TOTAL (Escalated 3 years at 4%/year)				**$13,259**	
Shakedown and Startup					
GEO, Inc operator on site	5	day	$750.00	$3,750	Quote provided by GEO, Inc (2014)
GEO C3 system monthly costs	0.25	Month	$33,000.00	$8,250	Quote provided by GEO, Inc (2014)
Electrical usage for vapor treatment	24,245	KWH	$0.18	$4,274	One week of electricity for vapor treatment system. Usage based on GEO, Inc. quote (2014).
Electrical usage for air compresser	5,796	KWH	$0.18	$1,022	Kaeser ASD-40 with refrigerated dryer draws 34.5 KW, or 828 KWH/day (per manufacturer)
Lab analysis of groundwater samples	4	Event	$1,500.00	$6,000	Quarterly groundwater monitoring (progress monitoring) during AS/SVE operation. Estimate based on previous project experience.
Traffic Control	0.25	Month	$2,000.00	$500	Estimate based on previous project experience
Security Guard	0.25	month	$8,000.00	$2,000	Quote from California Private Patrol (2014)
Security System	0.25	Month	$1,000.00	$250	Quote from Core1 Security Services (2014)
subtotal				**$26,046**	
TOTAL (Escalated 3 years at 4%/year)				**$29,298**	
AS/SVE System Operation - Year 4					
GEO, Inc operator on site	52	day	$750.00	$39,000	Quote provided by GEO, Inc (2014)
GEO C3 system monthly costs	12	Month	$33,000.00	$396,000	Quote provided by GEO, Inc (2014)
Electrical usage for vapor treatment	24,245	KWH	$0.18	$4,274	One week of electricity for vapor treatment system. Usage based on GEO, Inc. quote (2014).
Electrical usage for air compresser	5,796	KWH	$0.18	$1,022	Kaeser ASD-40 with refrigerated dryer draws 34.5 KW, or 828 KWH/day (per manufacturer)
Vapor phase GAC changeout	2	Each	$1,500.00	$3,000	Change out one 500-lb unit. Estimate based on previous project experience
Security System	12.00	Month	$1,000.00	$12,000	Quote from Core1 Security Services (2014)
subtotal				**$455,296**	
TOTAL (Escalated 3 years at 4%/year)				**$512,146**	
AS/SVE System Operation - Year 5					
subtotal				**$455,296**	
TOTAL (Escalated 4 years at 4%/year)				**$532,632**	
AS/SVE System Operation - Year 6					
subtotal				**$455,296**	
TOTAL (Escalated 5 years at 4%/year)				**$553,938**	
AS/SVE System Operation - Year 7					
subtotal				**$455,296**	
TOTAL (Escalated 6 years at 4%/year)				**$576,095**	
Decommisioning and Demobilization - Year 8					
Post Shutdown Groundwater Sampling					
Laboratory analysis	1	Event	$1,500.00	$1,500	Estimate based on previous project experience
subtotal				**$1,500**	
TOTAL (Escalated 7 years at 4%/year)				**$1,974**	
Well Destruction and Conveyance Piping Abandonment					
Well Abandonment (overdrill)	2,860	LF	$90.00	$257,400	Estimate based on previous project experience
Horizontal well abandonment	1	Lump	$25,000.00	$25,000	Estimate based on previous project experience
Traffic Control	2.00	Month	$2,000.00	$4,000	Estimate based on previous project experience
Security Guard	2.00	month	$8,000.00	$16,000	Quote from California Private Patrol (2014)
Security System	2.00	Month	$1,000.00	$2,000	Quote from Core1 Security Services (2014)
subtotal				**$304,400**	
TOTAL (Escalated 7 years at 4%/year)				**$400,570**	
Surface Component Decomissioning and Removal					
Traffic Control	0.50	Month	$2,000.00	$1,000	Estimate based on previous project experience
Security Guard	0.50	month	$8,000.00	$4,000	Quote from California Private Patrol (2014)
Security System	0.50	Month	$1,000.00	$500	Quote from Core1 Security Services (2014)
subtotal				**$5,500**	
TOTAL (Escalated 7 years at 4%/year)				**$7,238**	
Construction Subcontractor Costs Subtotal (Present Value)				**$4,459,088**	
Subcontractor handling (1.67%)				**$74,467**	
Construction Subcontractor Costs TOTAL (Present Value)				**$4,533,555**	
O&M Subcontractor Costs:					
Quarterly Monitoring - Year 8					
Four Quarterly Monitoring Events					
Lab analysis	4	Event	$1,500.00	$6,000	Estimate based on previous project experience
subtotal				**$6,000**	
TOTAL (Escalated 7 years at 4%/year)				**$7,896**	
O&M Subcontractor Costs Subtotal (Present Value)				**$7,896**	
Subcontractor handling (1.67%)				**$132**	
O&M Subcontractor Costs TOTAL (Present Value)				**$8,027**	
Construction Disposal Costs:					
Waste Disposal Description	**Number of Units**	**Unit**	**Unit Rate**	**TOTAL COST**	
Preliminary Work for Product Recovery - Year 1					
Concrete disposal/recycling fee	1440	Ton	$65.00	$93,600	Verbal quote - Pacific States Environmental Contractors (2015)
Hazardous soil disposal	50	Ton	$546.00	$27,300	Email quote from Clean Harbors (2015). Incineration; Aragonite, Utah.
subtotal				**$120,900**	
Product Recovery - Year 3					
NAPL disposal	4,600	Gal	$9.66	$44,436	Engineering estimate based on previous projects
subtotal				**$44,436**	
TOTAL (Escalated 2 years at 4%/year)				**$51,984**	
Preliminary Work for AS/SVE - Year 4					
Hazardous soil disposal	141	Ton	$546.00	$76,986	Email quote from Clean Harbors (2015). Incineration; Aragonite, Utah.
subtotal				**$76,986**	
TOTAL (Escalated 3 years at 4%/year)				**$86,599**	
AS/SVE System Operation - Year 4					
Hazardous water disposal	5,000	Gal	$1.30	$6,500	Cleen Harbors quote (Feb 2011) - Escalated 4 years at 4%/year
subtotal				**$6,500**	
TOTAL (Escalated 3 years at 4%/year)				**$7,312**	
AS/SVE System Operation - Year 5					
Hazardous water disposal	5,000	Gal	$1.30	$6,500	Cleen Harbors quote (Feb 2011) - Escalated 4 years at 4%/year
subtotal				**$6,500**	
TOTAL (Escalated 4 years at 4%/year)				**$7,604**	
AS/SVE System Operation - Year 6					
Hazardous water disposal	5,000	Gal	$1.30	$6,500	Cleen Harbors quote (Feb 2011) - Escalated 4 years at 4%/year
subtotal				**$6,500**	
TOTAL (Escalated 5 years at 4%/year)				**$7,908**	
AS/SVE System Operation - Year 7					
Hazardous water disposal	5,000	Gal	$1.30	$6,500	Cleen Harbors quote (Feb 2011) - Escalated 4 years at 4%/year
subtotal				**$6,500**	
TOTAL (Escalated 6 years at 4%/year)				**$8,225**	
Total Disposal Costs (Present Value)				**$290,531**	

EE/CA - AMCO
BASIS OF ESTIMATE SHEETS

Construction Transportation Costs:

Waste Transportation Description	Number of Units	Unit	Unit Rate	TOTAL COST	
Preliminary Work for Product Recovery - Year 1					
Concrete hauling	840	LCY	$33.00	$27,720	Verbal quote - Pacific States Environmental Contractors (2015)
Hazardous soil hauling	266	Ton	$201.00	$53,466	Email quote from Clean Harbors (2015). Intermodal transport to Aragonite, Uta
subtotal				**$81,186**	
Product Recovery - Year 3					
NAPL hauling	15	ton	$201.00	$3,015	Assumed similar to hazardous soil hauling. Cleen Harbors quote (2015)
subtotal				**$3,015**	
TOTAL (Escalated 2 years at 4%/year)				**$3,527**	
Preliminary Work for AS/SVE - Year 4					
Hazardous soil hauling	141	Ton	$201.00	$28,341	Email quote from Clean Harbors (2015). Intermodal transport to Aragonite, Uta
subtotal				**$28,341**	
TOTAL (Escalated 2 years at 4%/year)				**$33,155**	
AS/SVE System Operation - Year 4					
Hazardous water hauling	1	Load	$1,255.00	$1,255	Engineering estimate based on previous projects. Assume 5,000 gallons per load.
subtotal				**$1,255**	
TOTAL (Escalated 3 years at 4%/year)				**$1,412**	
AS/SVE System Operation - Year 5					
Hazardous water hauling	1	Load	$1,255.00	$1,255	Engineering estimate based on previous projects. Assume 5,000 gallons per load.
subtotal				**$1,255**	
TOTAL (Escalated 4 years at 4%/year)				**$1,468**	
AS/SVE System Operation - Year 6					
Hazardous water hauling	1	Load	$1,255.00	$1,255	Engineering estimate based on previous projects. Assume 5,000 gallons per load.
subtotal				**$1,255**	
TOTAL (Escalated 5 years at 4%/year)				**$1,527**	
AS/SVE System Operation - Year 7					
Hazardous water hauling	1	Load	$1,255.00	$1,255	Engineering estimate based on previous projects. Assume 5,000 gallons per load.
subtotal				**$1,255**	
TOTAL (Escalated 6 years at 4%/year)				**$1,588**	
Total Transportation Cost (Present Value)				**$123,863**	

O&M Disposal Costs:

Waste Disposal Description	Number of Units	Unit	Unit Rate	TOTAL COST	
Quarterly Monitoring - Year 8					
Four Quarterly Monitoring Events					
Hazardous water disposal	4	Drum	$200.00	$800	Estimate based on previous project experience
subtotal				**$800**	
TOTAL (Escalated 7 years at 4%/year)				**$1,053**	
Total O&M Disposal Costs (Present Value)				**$1,053**	

O&M Transportation Costs:

Waste Transportation Description	Number of Units	Unit	Unit Rate	TOTAL COST	
Quarterly Monitoring - Year 8					
Four Quarterly Monitoring Events					
Hazardous water hauling	4	Drum	$800.00	$3,200	Estimate based on previous project experience
subtotal				**$3,200**	
TOTAL (Escalated 7 years at 4%/year)				**$4,211**	
Total O&M Disposal Costs (Present Value)				**$4,211**	

Other Direct Costs:

Item Description	Number of Units	Unit	Unit Rate	TOTAL COST
Portable sanitary station (week)	364	week	$165.00	$60,060
Truck Scales (Month)				$0
ODC's - Site Support				**$60,060**
Labor				$0
Equipment				$0
Material:				$0
ODC's				$0
Subcontractors				$0
ODC's - Rad H&S				**$0**
Total ODC Costs				**$60,060**

Contingency:

Basis of Contingency:
10% general contingency applied.

Percent Contingency: 10.0%

Total WBS Costs:

Total Construction Costs

Total Construction Labor Cost:	$3,924,470
Total Construction Material Cost:	$511,429
Total Construction Subcontractor Cost	$4,533,555
Total Construction Disposal Cost:	$290,531
Total Construction Transportation Cost:	$123,863
Total ODC:	$60,060
TOTAL CONSTRUCTION CAPITAL COST (Less Contingency):	$9,443,909
TOTAL CONTINGENCY COST:	$944,391
TOTAL CONSTRUCTION CAPITAL COST (With Contingency):	**$10,388,300**
Project Management (5%):	**$519,415**
Remedial Design (8%):	**$831,064**
Construction Management (6%):	**$623,298**
TOTAL CONSTRUCTION COST:	**$12,362,077**

Total O&M Costs

Total O&M Labor Cost:	$48,056
Total O&M Subcontractor Cost:	$8,027
Total O&M Material Cost:	$8,554
Total O&M Disposal Cost:	$1,053
Total O&M Transportation Cost:	$4,211
TOTAL O&M CAPITAL COST (Less Contingency):	$69,900
TOTAL CONTINGENCY COST:	$6,990
TOTAL O&M CAPITAL COST (With Contingency):	$76,890
Technical Support (10%)	**$7,689**
TOTAL O&M COST:	**$76,890**

TOTAL COSTS

TOTAL CONSTRUCTION COST:	**$12,362,077**
TOTAL O&M COST:	**$58,640**
TOTAL COST:	**$12,420,716.47**

Approvals:

Prepared By:		Date:	
Reviewed By:		Date:	
Approved By:		Date:	