EDC CONSULTANTS

PROFESSIONAL ENGINEERS, PLANNERS & SURVEYORS

EDC W.O. 95-110.....CONTRACT NO. SC-95-A-0231.....NEWMARK RD.....6/6/95

.....SURVEY OF SOUTH PLANT NORTH OF 13TH STREET.....

HORIZONTAL AND VERTICAL CONTROL FOR AERIAL SURVEY (X,Y,Z, AND VERTICAL ONLY)

LIST POINTS

AT & V-ONLY #	NORTHING	EASTING	ELEV.	DESCR
18	2000.000	4000.000	1105.840	PW13THM
19	2008.020	4000.000	1105.960	PW13THM
20	99.990	99.990	1104.360	13THGEN
25	2347.500	4000.225	1110.170	PWWBSHM
26	2376.100	4000.070	1110.490	PWWBSHM
27	3207.500	4000.121	1122.620	PWMAGNM
28	3236.860	4000.000	1122.950	PWMAGNM
29	3879.180	3999.958	1131.830	SW16THM
30	3949.740	3999.805	1132.760	SW16THM
31	4201.600	4000.036	1136.850	SW17THM
32	4452.420	4000.000	1140.890	SW17THM
33	4969.858	4000.010	1148.810	SW18THM
34	4453.987	4680.498	1140.790	PW17&SW
35	5918.653	3999.339	1164.140	SW21STM
36	6603.142	3998.688	1173.980	PWHLNDM
37	6602.976	4025.828	1173.870	PWHLNDM
38	6969.213	4027.211	1178.390	SW23RDM
39	7637.272	4029.748	1187.950	PW25THM
40	8297.058	4032.133	1197.780	LT27THM
41	8944.512	4029.280	1208.040	SW28THM
42	9578.890	4030.759	1216.880	RPSWLKM
43	10260.745	4033.402	1225.350	MON30T
44	10886.639	4035.473	1233.120	IP31STM
45	10906.173	4094.326	1232.330	RP31STM
46	11527.996	4037.434	1240.650	S&WMV&M
47	11526.832	4697.028	1240.680	MH.SERW
48	11526.544	5017.638	1242.240	IP.LUGC
49	11526.116	5338.078	1243.700	MHSPLVE
50	11525.119	5979.597	1246.620	MHMB&LE
51	11283.781	5994.208	1242.720	NW.HPE
52	11127.020	5994.563	1240.140	W.HPE
53	10831.242	5993.678	1235.840	SW.HPE
54	10818.548	6599.285	1239.300	SE.HPE
55	11137.662	6588.517	1243.250	E.HPE
56	11342.924	6599.568	1247.350	NE.HPE
57	9745.508	4031.738	1218.790	IP29THM
60	10885.542	4041.161	0.000	RP31STM
61	10205.516	5995.018	0.000	RP30T
62	11523.893	6634.764	0.000	IPMB&W
70	99.990	99.990	1122.850	V-OPP#
71	99.990	99.990	1137.710	V-OPP#
72	99.990	99.990	1163.710	V-OPP#
73	99.990	99.990	1177.970	V-OPP#
74	99.990	99.990	1198.330	V-OPP#
75	99.990	99.990	1215.820	V-OPP#
76	99.990	99.990	1233.030	V-OPP#
77	99.990	99.990	1238.310	V-OPP#
78	99.990	99.990	1253.990	V-OPP#

W.O. 95-110

CONTROL DIAGRAM

1" = 1000'

▲ — X, Y, Z

● — VERTICAL ONLY

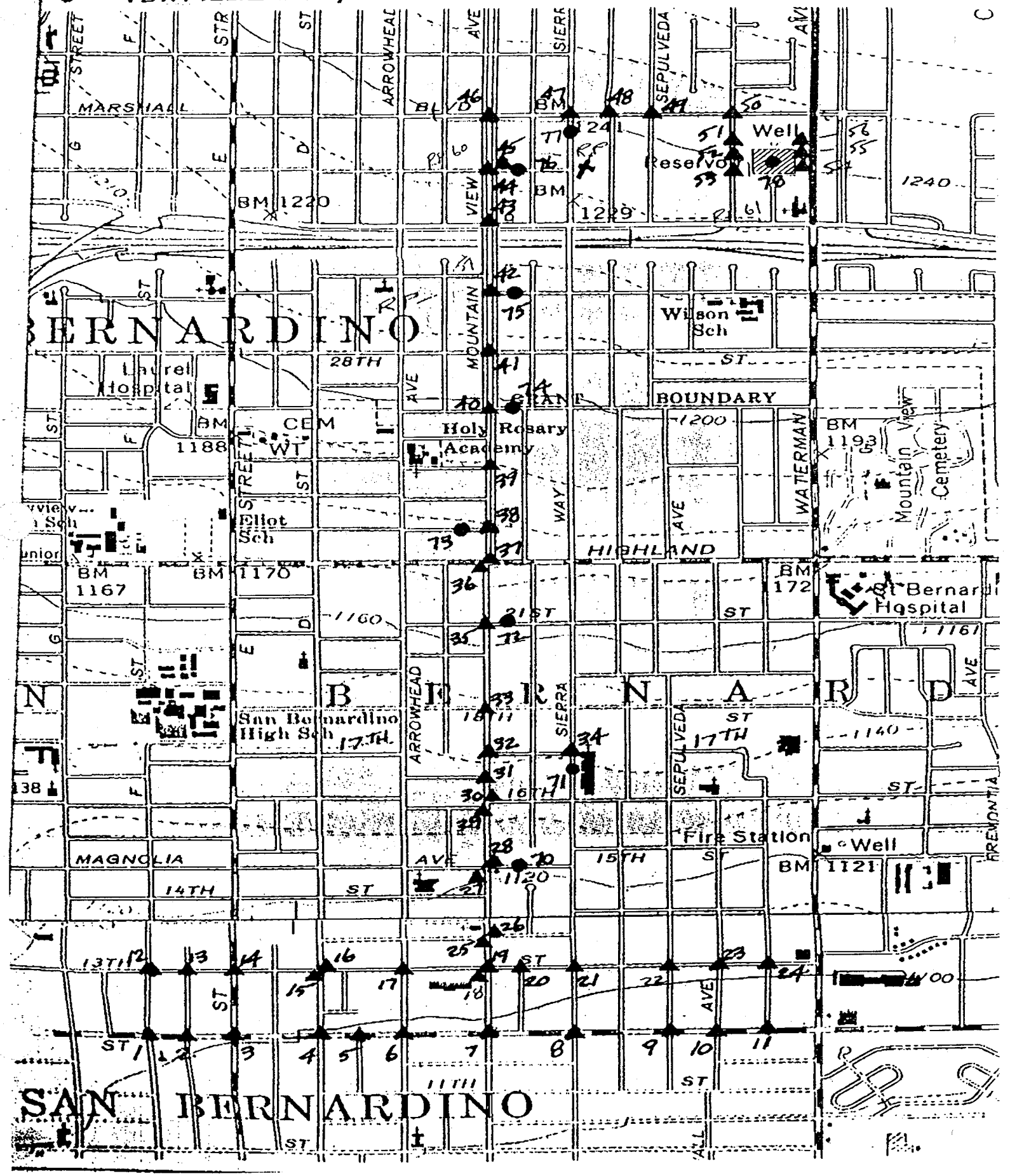

EDC CONSULTANTS

350 WEST BIRCH ST., SUITE 205, SAN BERNARDINO, CA 92401 • (909) 381-9916 • FAX (909) 381-9515

Date: 1/31/97

TO:

NAME: James Ryu, PE
COMPANY: SBMWD
PHONE #: (909) 384-5391
FAX: 384-5532
ADDRESS/CITY/STATE/ZIP:
OF PAGES INCLUDING THIS ONE: 5

RECEIVED
ENGINEERING
FEB 3 1997
CITY OF SAN BERNARDINO
MUNICIPAL WATER DEPT.

FROM:

NAME: Dave Lesser
COMMENTS:

RE: Newmark Waterline
11th Street Pipeline
Cut Sheets

If you do not receive all pages, please call back as soon as possible: (909) 381-9916

TIME SENT:

EDC CONSULTANTS

PROFESSIONAL ENGINEERS, PLANNERS & SURVEYORS
350 WEST FIFTH STREET, SUITE 205 - SAN BERNARDINO, CA 92401 - (909)381-9916 - FAX (909)381-9515

NEWMARK WL

GRADE SHEET

Crew PRL, RWC Calc'd. By PRL Sheet 1 of 4
Plan Sheet 4 Job No. 97-110 Date 1/31/97
Street 11 TH Street Grades 1E
Location As Shown Stakes 8' o/s North
Station Plan Grade Stake El. Cut/Fill Remarks Painted "+"

Station	Plan Grade	Stake El.	Cut/Fill	Remarks
13+62.15	83.40	90.82	<7.42	PRC 0.32
13+40.54	1083.47	92.08	<8.61	GRADE BREAK ℄ "U" ST.
13+24.43	83.55	91.57	<8.02	BC 19' LT. ℄ 11TH ST.
13+00	83.65	91.12	<7.47	
12+50	83.84	91.30	<7.46	
12+00	84.03	91.31	<7.28	
11+50	84.22	91.22	<7.00	19' LT. ℄ 11TH ST 0.3851
11+00	84.41	91.41	<7.00	
10+50	84.60	91.65	<7.05	
10+00	84.79	92.22	<7.43	
9+84	84.83	92.15	<7.32	14' LT. ℄ 11TH ST. 12" MJ 90° Bend
9+84 (9+28.50)	85.08	91.28	<6.20	41.50' RT. ℄ 11TH ST. 12" MJ 90° Bend
9+75 (9+14.50)	1085.11	—	—	41.50' RT. ℄ 11TH ST. 12" MJ Plug

EDC CONSULTANTS

PROFESSIONAL ENGINEERS, PLANNERS & SURVEYORS
350 WEST FIFTH STREET, SUITE 205 - SAN BERNARDINO,CA 92401 - (909)381-9916 - FAX (909)381-9515

NEWMARK W.L.

GRADE SHEET

Crew DRL, RNC Calc'd.By DRL Sheet 2 of 4
Plan Sheet 4- Job No. 97-110 Date 1/31/97
Street 11TH Street Grades ℄
Location 12' LT ℄ & DL 10' Lt ℄ Stakes 8' O/S North =
Station Plan Grade Stake El. Cut/Fill Remarks Printed "+"

93.58	18+00	81.86	88.09	<6.23	
	17+50	82.13	88.38	<6.25	
	17+36.50	1082.20	88.49	<6.29	GRADE BREAK
	17+00	82.32	88.52	<6.20	
	16+81.12	82.38			℄ Mayfield Ave.
	16+50	82.48	88.85	<6.37	
	16+00	82.64	89.11	<6.47	
	15+50	82.80	89.39	<6.59	
	15+00	82.96	89.71	<6.75	
	14+50	83.12	90.12	<7.00	
	13+99.87	83.28	90.54	<7.26	EC 12' LT. ℄ 11TH ST.

0.32'

EDC CONSULTANTS

PROFESSIONAL ENGINEERS, PLANNERS & SURVEYORS

350 WEST FIFTH STREET, SUITE 205 - SAN BERNARDINO, CA 92401 - (909)381-9916 - FAX (909)381-9515

NEW MARK W.L.

GRADE SHEET

Crew DRL RNC Calc'd.By [illegible] Sheet 3 of 4

Plan Sheet 4-E5 Job No. 97-110 Date 1/31/97

Street 11 TH Street Grades [illegible]

Location 12' N. ℄ & DL 10' N ℄ Stakes 8' o/s North

Station	Plan Grade	Stake El.	Cut/Fill	Remarks Pointed "+"
22+50 DL	80.56 79.03	87.36	<6.80 <8.33	
22+00 DL	80.58 79.08	87.41	<6.83 <8.33	
21+50 DL	80.63 79.13	87.36	<6.73 <8.23	
21+00 DL	80.68 79.18	87.30	<6.62 <8.12	
20+50 DL	80.73 79.23	87.59	<6.86 <8.36	
20+00 DL	1080.78 79.28	87.84	<7.06 <8.56	GRADE BREAK
19+50 DL	81.05 79.39	87.41	<6.36 <8.02	
19+00 DL	81.32 79.51	87.58	<6.26 <8.07	
18+50 DL	81.59 79.63	87.87	<6.28 <8.24	
18+34.11 DL	1081.67 79.67	87.79	<6.12 <8.12	12" FLG TEE 12' LT ℄
				BEG 12" WASTE LINE (DL 10' LT

0.10

EDC CONSULTANTS

PROFESSIONAL ENGINEERS, PLANNERS & SURVEYORS
350 WEST FIFTH STREET, SUITE 205 - SAN BERNARDINO, CA 92401 - (909)381-9916 - FAX (909)381-9515

NEWMARK W.L.

GRADE SHEET

Crew DRL, RWL Calc'd.By DRL Sheet 4 of 4
Plan Sheet 4 & 5 Job No. 97-117 Date 1/31/97
Street 11th Street Grades ℄
Location 12'N. ℄ & DL 10'N ℄ Stakes 8' o/s & 10' o/s

Station	Plan Grade	Stake El.	Cut/Fill	Remarks
25+2150				JOIN EXIST-FIELD VERIFY
25+08 1080.27 DL 78.77		87.77	<7.50 <9.00	GRADE BREAK
25+00 80.28 DL 78.78		87.75	<7.47 <8.97	
24+50 80.33 DL 78.83		87.76	<7.43 <8.93	0.10%
24+00 80.38 DL 78.88		87.62	<7.24 <8.74	
23+50 80.43 DL 78.93		87.61	<7.18 <8.68	
23+00 80.48 DL 78.48		87.52	<7.04 <8.54	

Sierra Way To Wall FIRST Phase

CO5273
So. Plant.

1 - 12" Fly x MJ adapt.
4 - 12" Mega-Lug's
6 - 12" Field Lock gasket's
1 - 12" MJ x MJ C.I. 90° bend
1 - 12" MJ lap w/4" blow off
920' 12" Ductile IRON Pipe

Monday 1-27-97 - offset 12" Fly gasket bolts, Fly x MJ adapt, 1 Field Lock & 13 - 12" Tyton Rubber's

Frank Phone 2171642

Monday 1-27-97

Removed 12" blind Fly, Install 12" offset x 3' set Fabricated by CWD, Installed 236 FT of 12" Ductile IRON Pipe, Repaired three 4" sewer Lateral's & backfilled Trench to be re-compacted at Later date. and recover one 12" blind Fly from CO. 5271 Elco Job.

Tuesday 1-28-97

Installed 446 12" Ductile pipe No other materials

Wednesday 1-29-97

Installed 252 12" Ductile pipe, one 12" MJ x 6" Fly tee w/ 6" MJ x Fly gate for blow off & hit 6" existing water main on Sepulvida st. C.W.D. Crew's made Repair's

Thursday 1-30-97

Installed 12" MJ 90° bend 53' of 12" Ductile & 6" blow off assembly. Contractor employee's were working in Trench deeper than 5' I [redacted] called it to supervisor's attention

~~Monday off~~ 10 5 2 1 5

(1)

Tuesday 2-5-97

Mike with Truatwien construction filled 985' of 12" Dip from 11th & Sierra way To The Wall st Well site with water and pressure Tested at 150 psi for 2 hours.

wednesday 2-5-97

Truatwien Installed 160' 12" PVC, 162' 16" DIP and backfilled trench

Thursday 2-6-97

Truatwien Installed 160' 12" PVC, 162' 16" Dip and backfilled trench. I called it to Const. Supervisor's attention about employee's in trench working out side of Shored area of trench That safety comes first.

Friday day off 2-7-97

~~Truatwien Installed 190'-16" DIP & 190'-12" PVC pipe went past intersection of Arrowhead ave up to 1108 Arrowhead.~~

Monday 2-10-97

Truatwien Installed 60'-16" & 60'-12 pipe ~~[illegible]~~ Two Thirds way across Arrowhead ave. Contractor was delayed because of old Gas Lines That were in ~~[illegible]~~ Trench Line that had to be cut out of The way.

CO 5273

Tuesday 2-11-97 ~~2-11-97~~

Truatwien Installed 190' 16" Dip & 12" PVC pipe stopped at 1108 Arrowhead.

Wednesday 2-12-97

Truatwien const. Installed Valve's, Tee's & Fitting's for 1108 Arrowhead. (Worked Late 8:00)

Thursday 2-13-97

Completed 1108 Arrowhead & Installed 180' - 16" DIP to intersection of Mayfield & 11th st.

Friday 2.14-97

Installed 16" DIP up to "D" st. 264'

Saturday

Crossed 2/3 rds of "D" st. 2-15-97

Monday 2-17-97

Crossed other 3rd of "D" st + 164' btwn "D" st & Stoddard.

Tuesday 2-18-97

Installed 16" DIP up to Stoddard with Mega-Lug's

Wednesday 2-19-97

Installed 72' 16" DIP + 90° 16" Bend & Mega-Lug's

Wednesday 2-20-97

Install 2-16" Butterfly gate valve's, 16" MJ x 12" Plg tee with Mega-Lug's

Thursday 2-21-97

Install 12" MJ C.I. 45° C.I. bends, 40'-12" DIP & Pave 11th st. & fill Total 16" DIP Line from well #1 to Well #4, 12" DIP for Well #1 Stoddard well.

Friday 2-22-97

Truatwiew pressure tested 16" DIP at 150 psi for two hours

Monday & Tuesday

Clean up & Pave Trenches Truatwiew's & Elco's

Saturday 3-1-97

Sewer Laterals

From Sierra way To Wall street on 11th street.

1 1101 N. Sierra way
2 114 E. 11th
3 134 E. 11th
4 136 E. 11th
5 142 E. 11th
6 150 E. 11th
7 1101 N. Lugo St
8 164 E. 11th
9 172 E. 11th
10 180 E. 11th
11 188 E. 11th
12 194 E. 11th
13 208 E. 11th
14 212 E. 11th
15 216 E. 11th

From Arrowhead to MT view

16 298 W. 11th
17 290 W. 11th
18 280 W. 11th
19 270 W. 11th
20 260 W. 11th
21 250 W. 11th
22 240 W. 11th
23 230 W. 11th

From "D" st To Arrowhead.

24 320 W. 11th
25 328 W. 11th
26 336 W 11th
27 338 W. 11th
28 358 W. 11th
29 364 W. 11th

28 Sewer Laterals Total. 11th st.

Sewer Lateral's offset

196 W. 11th st
1135 N. MT View
11 N. MT View

From 11TH st to 9TH st on 11TH st. 4'6" x 1309

From Sierra way to Wall on 11TH st. 3'4" x 997

offset's	MT View sewer	Replace
1 1135 MT View		1 1165 MT View
2 196 W. 11TH st.		2 1237 MT View
3 1151 MT View		3 1245 MT View
4 1155 MT View		4 1251 MT View
5 1123 MT View		5 1259 MT View
6 1225 MT View (not yet completed)		6 1267 "
		7 1271 "
8 MT View	196 Magnolia st.	8 1277 "
1433 "	39 1625 MT View	9 1287 "
1453 " * #2	40 1637 "	10 1295 "
1485 "	41 1649 "	11 1303 " 4 Sewer 2at's
1495 "	42 1661 "	12 1325 "
1523 "	43 1673 "	13 1331 "
1533 "	44 1685 "	14 1337 "
1543 "	45 1687	15 1349 "
1557 "	46 1701	16 1357 "
[redacted] "	47 1713	17 1361 "
1565	48 1725	18 1365 "
1567 "	49 1737	19 1371 "
1573 "	50 * 1749 NO SEWER Lateral	20 1381 "
1583 "	51 1761	21 1383 "
1599 "	52 1773	22 1399 "
1601 "	53 1785	
1613 "		

Sewer Laterals

54*	1797	mt vie, No Sewer Lateral.
55	1807	mt view
56	1839	"
57	1869	"
58	1879	"
59	1915	"
60	1931	"
61	1949	"
62	1963	"
63	1979	"
64	1995	"
65	2007	"
66	2015	"
67	2031	"
68	2047	"
69	2063	"
70	2079	"
71	2095	"
72	2107	"
73	2115	"
74	2119	"
75		
76		
77		

44+50 To 52+40 under Layment.

5' x 760' concrete

Sewer Lateral's Total
80

Wednesday

Co 5273 2-26-97

Truatwien const started on 11th & MT View Bldg stubout's didn't line up with Trench saw cut by Truatwien had to offset 24" & 16" main's to line up with new trench. Installed 2-24" & 2-16" C.I. 45° bend with 4 extra mega-Lug's on each main & 54' of each size of pipe.

Thursday 2-27-97

Contractor worked in the Rain. Installed Pipe 100' short of intersection of Orange & MT View

Friday 2-28-97

Truatwien installed pipe short of Base Line

Saturday 3-1-97

Truatwien crossed Base Line up to center line 1,980' of 16" & 1980' of 24" DIP Trucked to MT View *

Monday 3-3-97

Crossed Base Line from ℄ to 150' North

Tuesday 3-4-97

Re-compacted MT View btwn 11th & Base Line

Wednesday 3-5-97

Installed 250' of 16" & 24" DIP and 16" Butterfly gate, 16" MJ x 6" Fly Tee & 2" Service Saddle.

Concrete underlayment from 11th st
To Center Line of Baseline st. — 4387.5 FT^2

$2.5 \times 7.5 \times 731 = 13706 \div 27 = 507\ FT^3/yds$

16"&24" Ductile iron pipe from Tie-in to ℄ of
Base Line st. 645 FT
STREET Cut from 11th st to ℄ of Base Line 650 FT x 7½ FT

Concrete underlayment from ℄ of Orange
To south crosswalk of Baseline 315'
[redacted]

from North Crosswalk at Baseline

Class Two base material
From ℄ of Orange st. to South crosswalk of Base Line
315 FT $315 \times 7.5 \times 3.5 = 8269$ [redacted] FT^3

From south crosswalk sta 13+25 to sta 24+00 = 1075 FT
$1075 \times 7.5 \times 3.5 = 28219$ [redacted] FT^3

1 Runaway 3-6-97

Treatwiler Install 24"x4" Flg Tapping sleeve, 24" Butterfly gate valve, 24"MJx6" Flg C.I. Tee and 16"&24" DIP upto 13th st intersection.

Monday 3-10-97

Installed pipe from 13th st upto 300'

Tuesday 3-11-97

Installed pipe from 14th st up to 360'

Wednesday 3-12-97

Installed 360' upto Virginia st.

Thursday 3-13-97

Installed 300' of 16"&24" DIP past Magnolia st. (Hit gas service)

Friday 3-14-97

Unload 16"&24" on MT View & Clean-up.

Monday 3-17-97

Installed 16"&24" DIP ~~to~~ up to 16th st.

Tuesday 3-18-97

Installed 150' 16"&24" DIP Set Shoring Shield because sandy soil.

Class Two Base Material ~~[illegible]~~ L - P1

from sta 6+34 To sta 14+30 = 796'

4' - 6" = 3'6" 796 x 3.6 = 2786 x 6.00 = 16,716.00

2,786 Tons

from sta 16+00 To sta 24+00 = 800'

3'6" - 6" = 3' 800 x 3 = 2400 x 6.00 = 14,400.00

2,400 Tons

16,716.00
14400.00
31,116.00

Treatwiew installed 150-16" & 24" D.I.P. at 16th & Mt View crossed Gas, 12" wtr, 4" wtr & 10" sewer mains and backfilled Trench.

Tuesday 4-8-97

T Reatwiew started on 16" main on 17th st. Laid pipe past alley way

Wednesday 4-9-97

Asphalt Cap Tuatwein const

11TH & MT View	20' x 68' =	1360 FT²	
Base Line & MT View	B.O. & A.V./12.5 x 5 =	62.5 FT²	1003.25 FT²
13TH & MT View	B.O. & A.V. 13.5 x 30 =	405 FT²	
Magnolia & MT View	B.O & A.V. 5.5 x 10.5 =	57.75 FT²	
16TH & MT View	B.O & A.V 13.5 x 29.5 =	398.25 FT²	
21ST & MT View	B.O & A.V. 5.5 x 14.5 =	79.75 FT²	

1003.25 x .23 = $230.75 Blow off's & Air vac Lateral's

1360 x .23 = $312.80 Intersection 11TH & MT View

Sta 6+40 To Sta 9+00 = 260' x 16 = 4160 FT² x .23 = $956.80

Sta 9+00 To Sta 44+90 = 3,590 x 16 = 57,440 FT² x .23 = $13,211.20

Sta 44+90 To Sta 60+81 = 1591 x 12 = 19,092 FT² x .23 = $4,391.16

17TH st 530' x 10 = 5300 FT² + 400 FT² = 5,700 FT² x .23 = $1,311.00

MINUS Blow off's & Air vac Lateral's $20,182.96

with Blow off's & Air vac Lateral's $20,413.71

Total's

Truatwein Const. Asphalt cap.

11th & MT View	20'x 68' =	1360 FT²	
Base Line & MT View	13.5x30' =	405 FT²	
B.O. & A.V.			
13th & MT View	12.5x5 =	62.5 FT²	
B.O. & A.V.			
Magnolia & MT View	5.5x10.5 =	57.75 FT²	
B.O. & A.V.			
16th & MT View	13.5x29.5 =	398.25 FT²	
B.O. & A.V.			
21st & MT View	5.5x14.5 =	79.75 FT²	
B.O. & A.V.			
Blow offs & Air vac's	1003.25 FT² x .23 =		$ 230.75
11th & MT View Intersection	1360 FT² x .23 =		312.80
Sta 6+40 To sta 9+00 =	4160 FT² x .23 =		956.80
Sta 9+00 To sta 44+90 =	57440 FT² x .23 =		13,211.20
Sta 44+90 To sta 60+81 =	19,092 FT² x .23 =		4,391.16
17th & MT View	7640 FT² x .23 =		1,757.20
			[illegible]
			20,809.91

3-23-98

CO 5273

24" Raw water main inspection Mt View
(Pressure test complete)

Acct # 5-330-01
Supervision

Equip # 31

T. Alcaraz 5.0 hrs CO 5273
4.0 hrs Supervision

5273

EDC CONSULTANTS

PROFESSIONAL ENGINEERS, PLANNERS & SURVEYORS
350 WEST FIFTH STREET, SUITE 205 - SAN BERNARDINO, CA 92401 - (909)381-9916 - FAX (909)381-9515

12" PIPELINE

GRADE SHEET

Crew DRL, RWC Calc'd.By DRL Sheet 1 of 3
Plan Sheet 6 and 7 Job No. 97-110 Date 1/25/97
Street 11TH Street Grades ℄
Location 10' Left of ℄ Stakes 8' o/s North =
Station Plan Grade Stake El. Cut/Fill Remarks Printed "+"

(CON'T ON SHT 2)

38+00	37+81.23	76.89	83.57	C 6 68	℄ LUGO AVE
37+75		76.92	83.58	C 6 66	
37+50		76.94	83.74	C 6 80	
37+25		76.97	83.89	C 6 92	
37+00		76.99	83.95	C 6 96	GRADE BREAK
36+75		77.04	84.01	C 6 97	
36+50		77.09	84.17	C 7 08	
36+25		77.14	84.35	C 7 21	
36+00		77.18	84.44	C 7 26	
35+75		77.04	84.53	C 7 49	
35+50		77.28	—		
35+25		77.33	84.77	C 7 44	
35+00		77.38	84.87	C 7 49	
34+75		77.43	85.02	C 7 59	
34+50		77.47	85.19	C 7 72	
34+39.62		77.44	85.54	C 8 10	ANGLE PT. 10' LT. ℄
34+25		77.52	—		
34+03.62		77.56	—		12" TEE 12' LT. ℄
32+96.54	33+87.83	1077.77	—	℄ SIERRA WAY —	GB / NIC

S=0.001

S=0.001

85.55 T.IP Sierra Way

EDC CONSULTANTS

PROFESSIONAL ENGINEERS, PLANNERS & SURVEYORS
350 WEST FIFTH STREET, SUITE 205 - SAN BERNARDINO,CA 92401 - (909)381-9916 - FAX (909)381-9515

12" PIPELINE

GRADE SHEET

Crew DEL, RWC Calc'd.By DEL Sheet 2 of 3
Plan Sheet 6 and 7 Job No. 97-110 Date 1/25/97
Street 11TH Street Grades ℄
Location 10' Left of ℄ Stakes 8' o/s North = Painted "+"

(CON'T ON SHT. 3)

Station	Plan Grade	Stake El.	Cut/Fill	Remarks
42+25	76.47	83.18	C 6.71	
42+00	76.49	83.30	C 6.81	
41+75	76.52	83.38	C 6.86	
41+67.15				℄ SEPULVEDA AVE. 84.04 T.P.
41+50	76.54	83.41	C 6.87	
41+25	76.57	83.40	C 6.83	
41+00	76.59	83.45	C 6.86	
40+75	76.62	83.46	C 6.84	
40+50	76.64	83.50	C 6.86	S=0.001
40+25	76.67	83.54	C 6.87	
40+10	—	—	—	B.O. 16' LT.
40+00	76.69	83.49	C 6.80	
39+75	76.72	83.49	C 6.77	
39+50	76.74	83.51	C 6.77	
39+25	76.77	83.49	C 6.72	
39+00	76.79	83.52	C 6.73	
38+75	76.82	83.59	C 6.77	
38+50	76.84	83.50	C 6.66	
38+25	76.87	83.53	C 6.66	

(CON'T FROM SHT. 1)

EDC CONSULTANTS

PROFESSIONAL ENGINEERS, PLANNERS & SURVEYORS

350 WEST FIFTH STREET, SUITE 205 - SAN BERNARDINO,CA 92401 - (909)381-9916 - FAX (909)381-9515

12" PIPELINE

GRADE SHEET

Crew DEL, RMC Calc'd.By DRL Sheet 3 of 3

Plan Sheet 6 and 7 Job No. 97-110 Date 1/25/97

Street 11TH Street Grades TC

Location 10' Left of ℄ Stakes 8' offset with =

Station	Plan Grade	Stake El.	Cut/Fill	Remarks
03+14.11			E. ℄	
03+07.12	1076.34	82.87	C 6.53	90° BEND
03+28.69			W. ℄	
03+25	76.37	82.96	C 6.59	
03+00	76.39	82.96	C 6.57	
02+75	76.42	83.12	C 6.70	
02+50	76.44	83.14	C 6.70	

S = 0.001

(CONT. FROM SHT. 2)

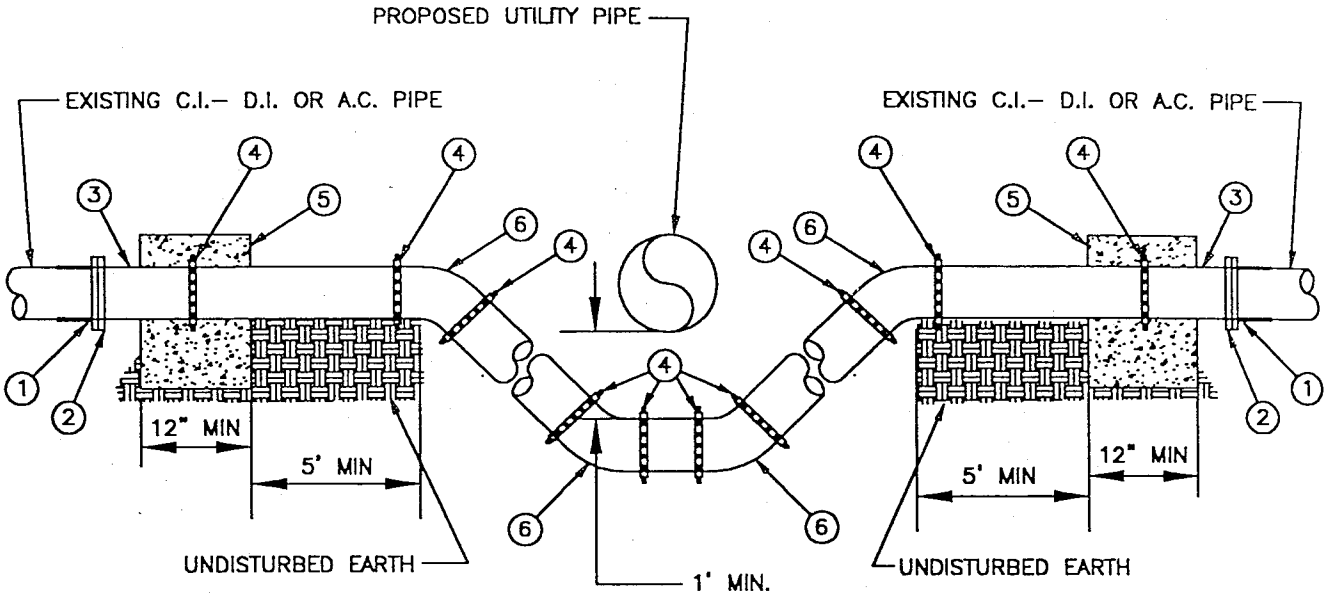

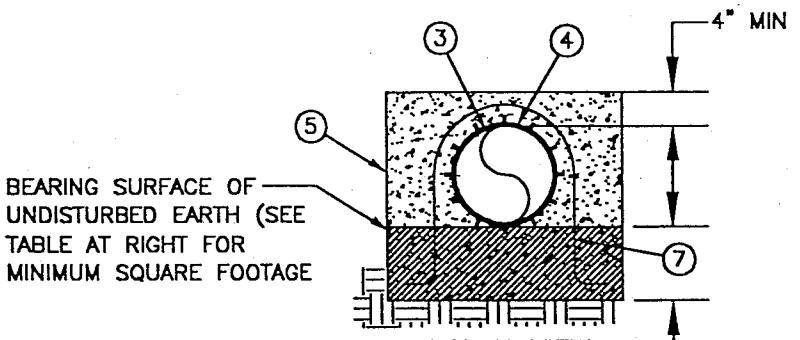

SECTION VIEW
THRUST BLOCK\BEARING SURFACE

SURFACE BEARING TABLE

12" PIPE	4.5 SQUARE FEET
8" PIPE	3.0 SQUARE FEET
6" PIPE	2.0 SQUARE FEET
4" PIPE	2.0 SQUARE FEET

ITEM	QTY	DESCRIPTION
①	2 EA	____" FLANGED COUPLING ADAPTOR (NOT NEEDED IF EXISTING PIPE IS DUCTILE IRON)
②	2 EA	____" FLANGE x MJ ADAPTOR (NOT NEEDED IF EXISTING PIPE IS DUCTILE IRON)
③	____LF	____" DUCTILE IRON PIPE
④	10 EA	____" MEGA–LUG LINEAL RESTRAINT
⑤	2 EA	CONCRETE THRUST BLOCK (2000 PSI MIN. STRENTH)
⑥	4 EA	____" 45° D.I. BEND (MJ)(RESTRAINED)
⑦	2 EA	#4 REBAR (MAINTAIN 2" MIN. DISTANCE FROM EARTH)

		SAN BERNARDINO MUNICIPAL WATER DEPARTMENT	DRAWING NUMBER
		4" THRU 12" VERTICAL OFF–SET OF EXISTING D.I., C.I. OR A.C. PIPE	SBMWD W 6.9
REVISION	DATE	APPROVED W. William Bryden DATE 12-6-96	
SCALE: NONE		W. WILLIAM BRYDEN RCE 28981	

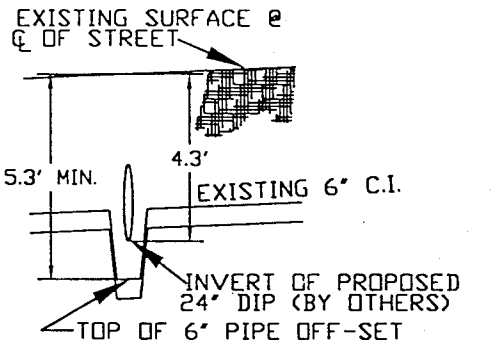

PROFILE - 6" OFF-SET

SCALE: VERT. 1"=5', HORIZ. 1"=50'

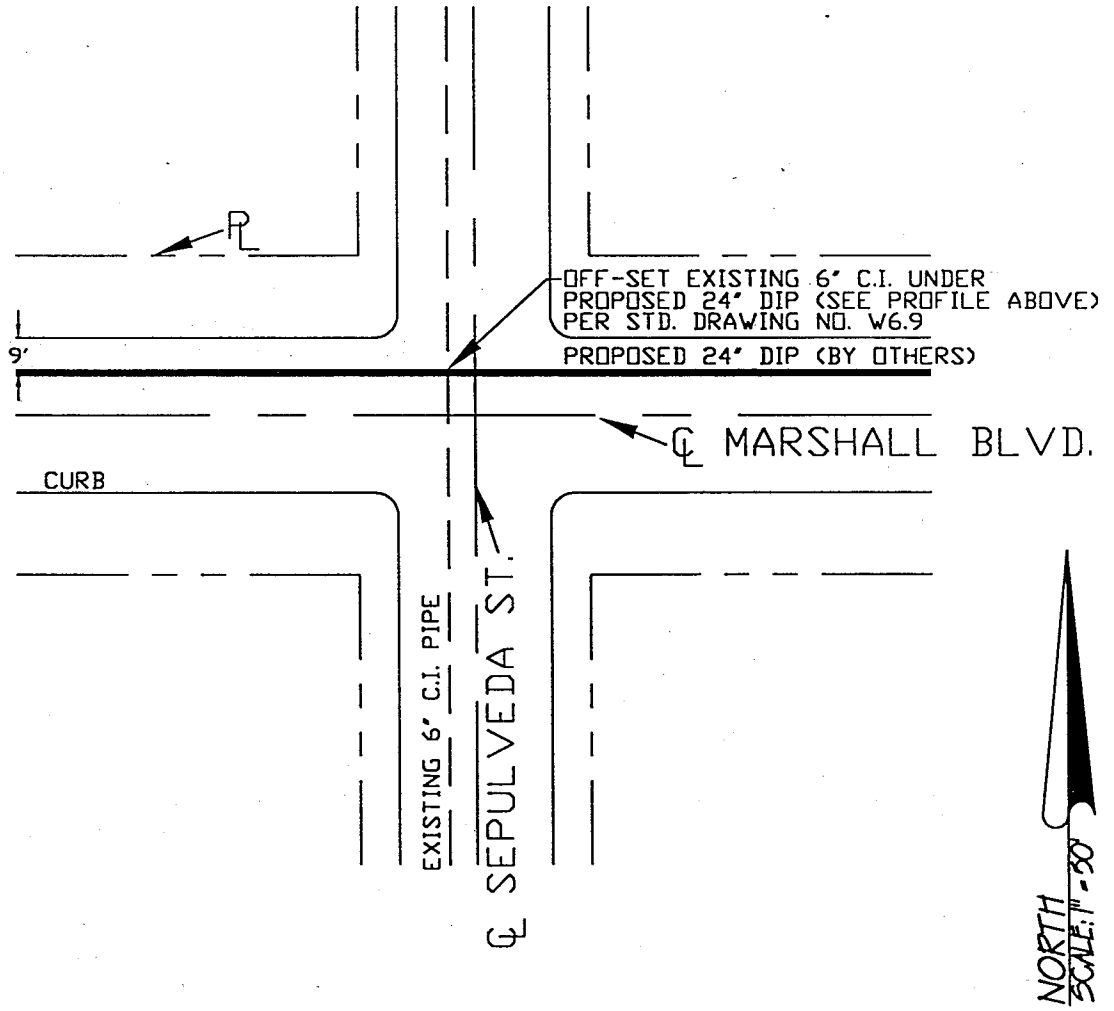

DESIGNED S.W. LEDBETTER	APPROVED 12-02 19 96 S.B.M.W.D. / PRINCIPAL ENGINEER REGISTERED CIVIL ENGINEER NO. 28981	CITY OF SAN BERNARDINO MUNICIPAL WATER DEPARTMENT 300 N. D STREET, SAN BERNARDINO, CA. 92418 • (909) 384 - 5391
DRAWN BY S.W. LEDBETTER	CONSTRUCTION ORDER # 5273	US-EPA SOUTH PLANT TRANSMISSION PIPELINE VERTICAL OFF-SET OF EXISTING WATER LINES
CHECKED BY J.G. DYE	SHEET 2 OF 8 SHEETS	

File Location moondog d:\@data\autocad\US-EPA\co5273

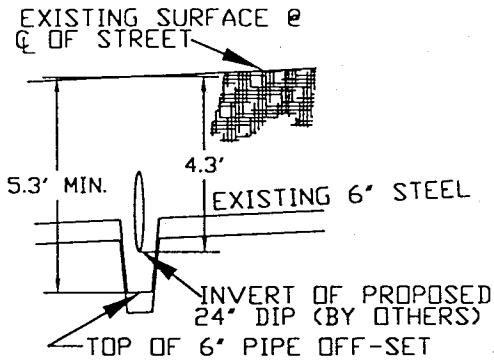

PROFILE - 6" OFF-SET

SCALE: VERT. 1"=5', HORIZ. 1"=50'

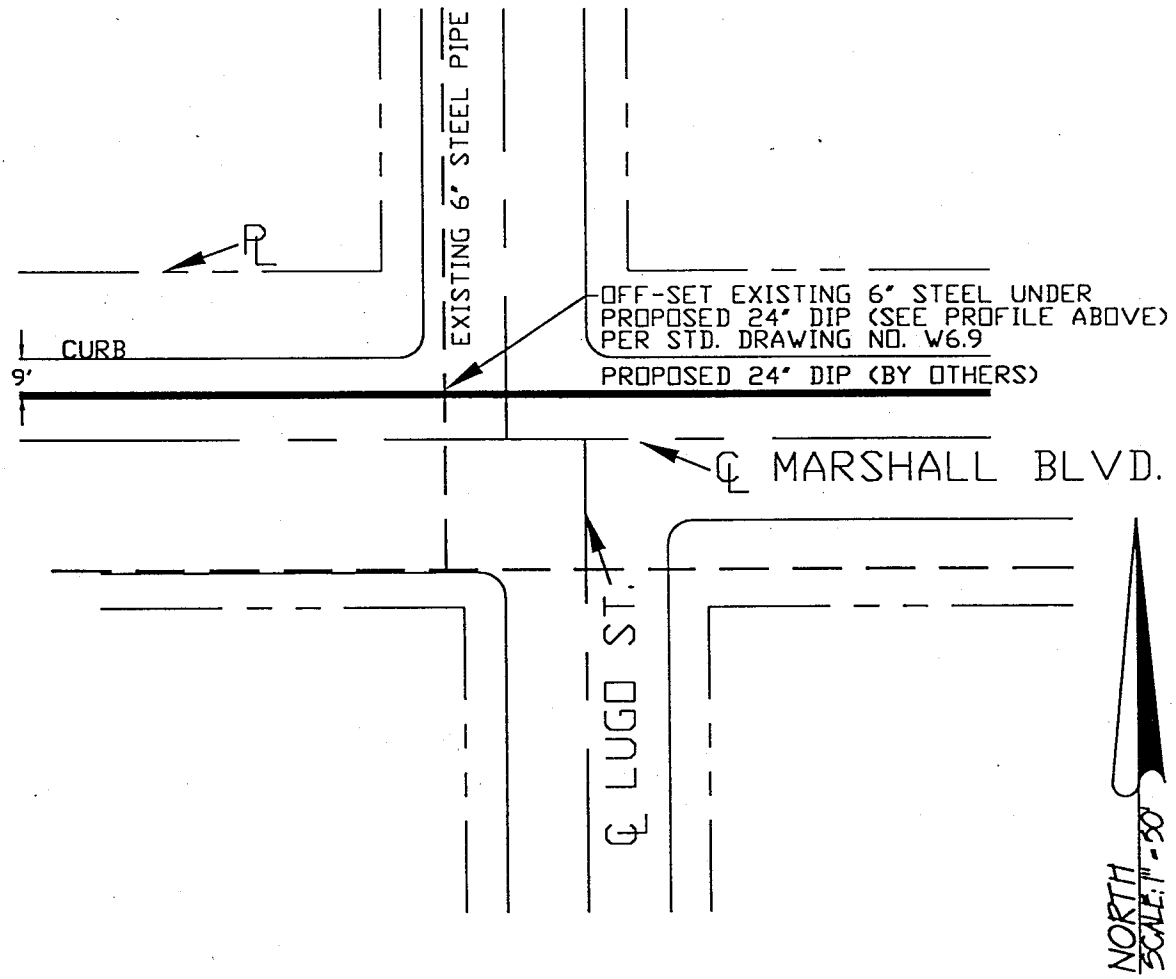

DESIGNED S.W. LEDBETTER	APPROVED 11-02 19 96 S.B.M.W.D. / PRINCIPAL ENGINEER REGISTERED CIVIL ENGINEER NO. 28981	CITY OF SAN BERNARDINO MUNICIPAL WATER DEPARTMENT 300 N. D STREET, SAN BERNARDINO, CA. 92418 • (909) 384 - 5391
DRAWN BY S.W. LEDBETTER	CONSTRUCTION ORDER # 5273	US-EPA SOUTH PLANT TRANSMISSION PIPELINE VERTICAL OFF-SET OF EXISTING WATER LINES
CHECKED BY J.G. DYE	SHEET 3 OF 8 SHEETS	

File Location moondog d:\@data\autocad\US-EPA\co5273

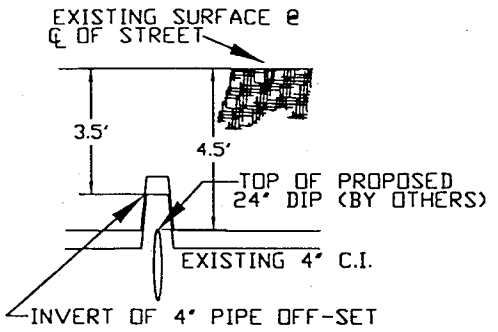

PROFILE - 4" OFF-SET

SCALE: VERT. 1"=5', HORIZ. 1"=50'

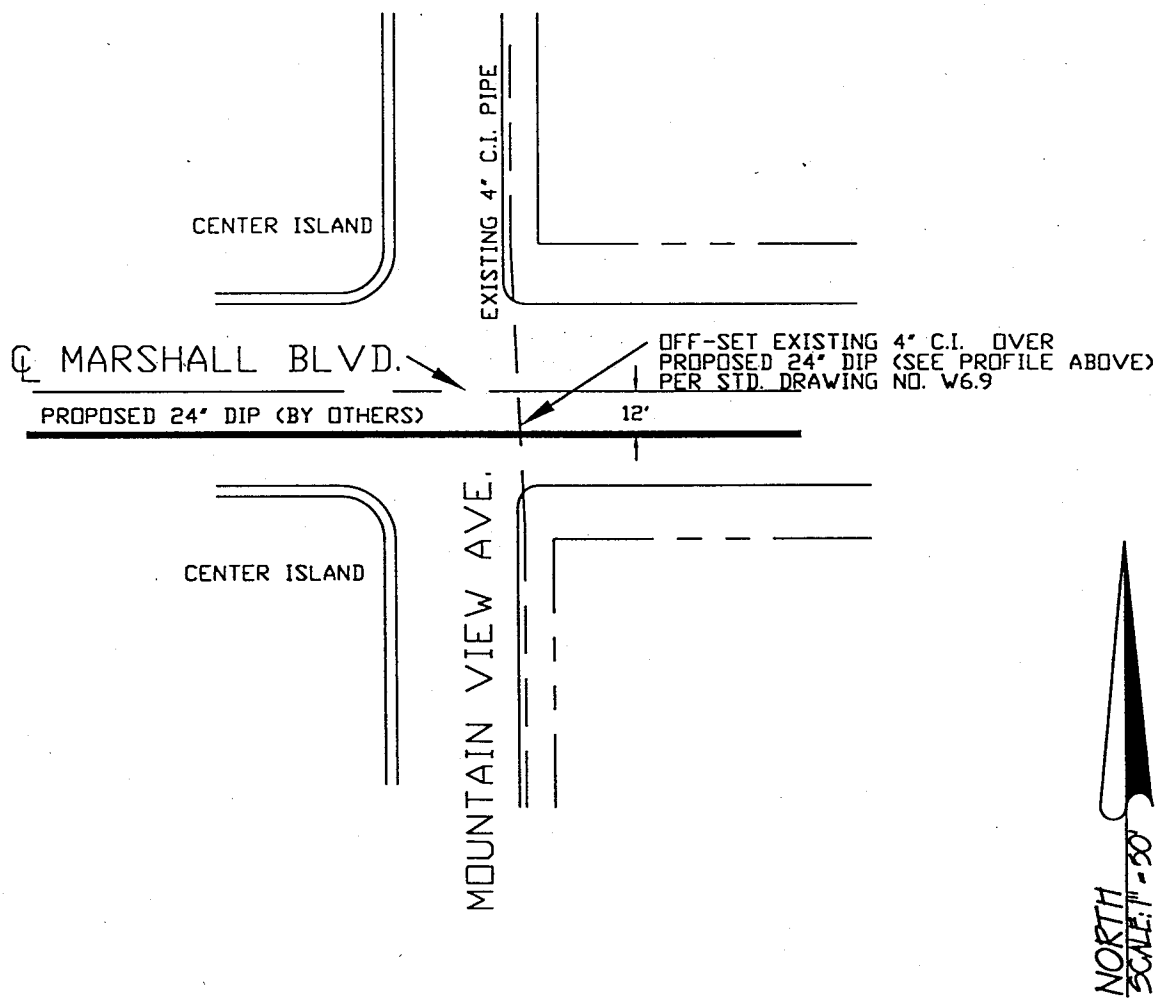

DESIGNED S.W. LEDBETTER	APPROVED 12-02 19 96	CITY OF SAN BERNARDINO
DRAWN BY S.W. LEDBETTER	S.B.M.W.D. / PRINCIPAL ENGINEER REGISTERED CIVIL ENGINEER NO. 28981	MUNICIPAL WATER DEPARTMENT 300 N. D STREET, SAN BERNARDINO, CA. 92418 • (909) 384 - 5391
CHECKED BY J.G. DYE	CONSTRUCTION ORDER # 5273	US-EPA SOUTH PLANT TRANSMISSION PIPELINE VERTICAL OFF-SET OF EXISTING WATER LINES
	SHEET 4 OF 8 SHEETS	

File Location moondog d:\@data\autocad\US-EPA\co5273

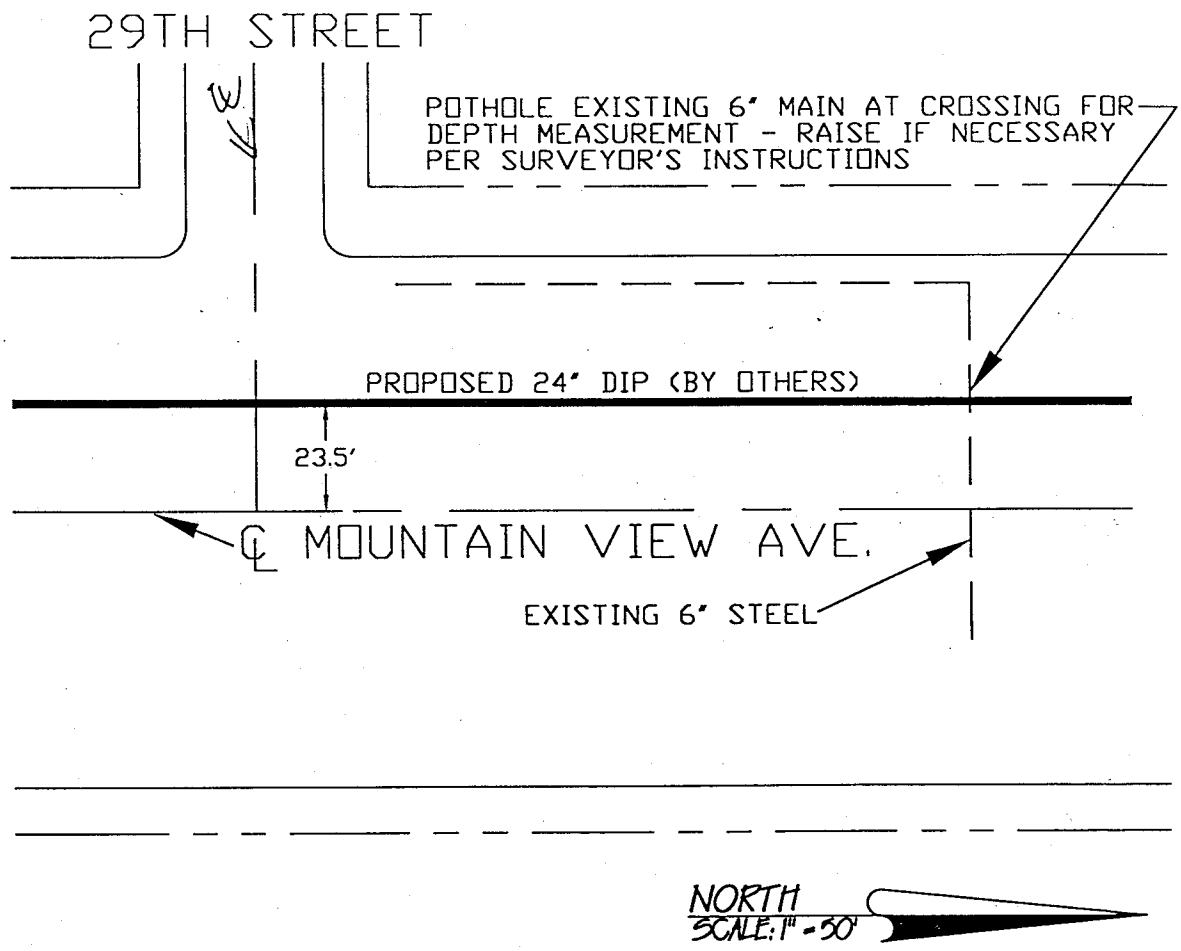

DESIGNED S.W. LEDBETTER	APPROVED 12-02 19 96	CITY OF SAN BERNARDINO
DRAWN BY S.W. LEDBETTER	S.B.M.W.D. / PRINCIPAL ENGINEER REGISTERED CIVIL ENGINEER NO. 28981	MUNICIPAL WATER DEPARTMENT
CHECKED BY J.G. DYE	CONSTRUCTION ORDER # 5273	300 N. D STREET, SAN BERNARDINO, CA. 92418 • (909) 384 - 5391
	SHEET 6 OF 8 SHEETS	US-EPA SOUTH PLANT TRANSMISSION PIPELINE POTHOLE EXISTING 6" WATER LINE

File Location moondog d:\@data\autocad\US-EPA\co5273

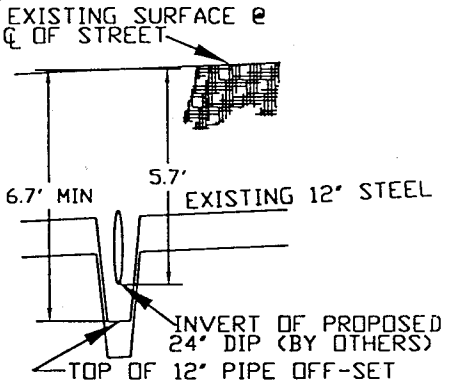

PROFILE - 12" OFF-SET

SCALE: VERT. 1"=5', HORIZ. 1"=50'

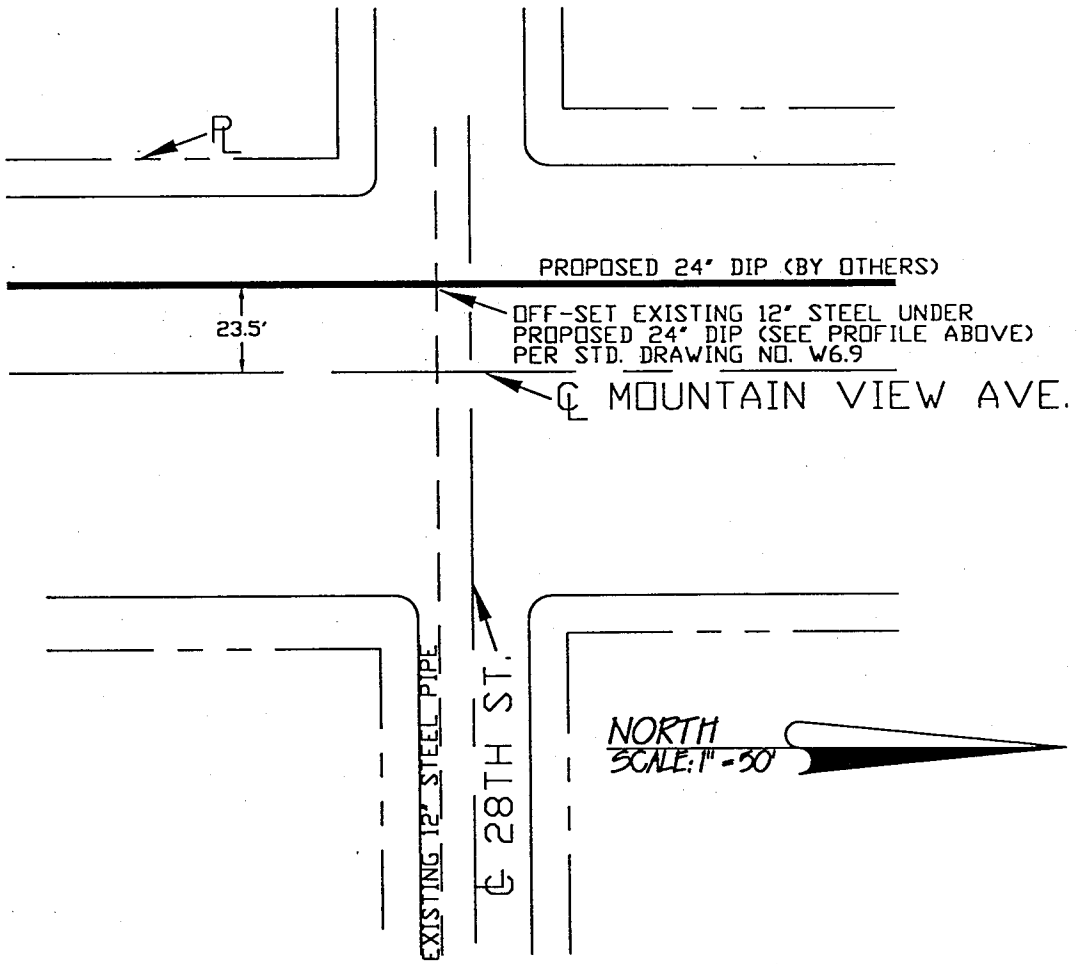

DESIGNED S.W. LEDBETTER	APPROVED 8-02 19 96 S.B.M.W.D. / PRINCIPAL ENGINEER REGISTERED CIVIL ENGINEER NO. 28981	CITY OF SAN BERNARDINO MUNICIPAL WATER DEPARTMENT 300 N. D STREET, SAN BERNARDINO, CA. 92418 • (909) 384 - 5391
DRAWN BY S.W. LEDBETTER	CONSTRUCTION ORDER # 5273	US-EPA SOUTH PLANT TRANSMISSION PIPELINE VERTICAL OFF-SET OF EXISTING WATER LINES
CHECKED BY J.G. DYE	SHEET 5 OF 8 SHEETS	

File Location moondog d:\@data\autocad\US-EPA\co5273

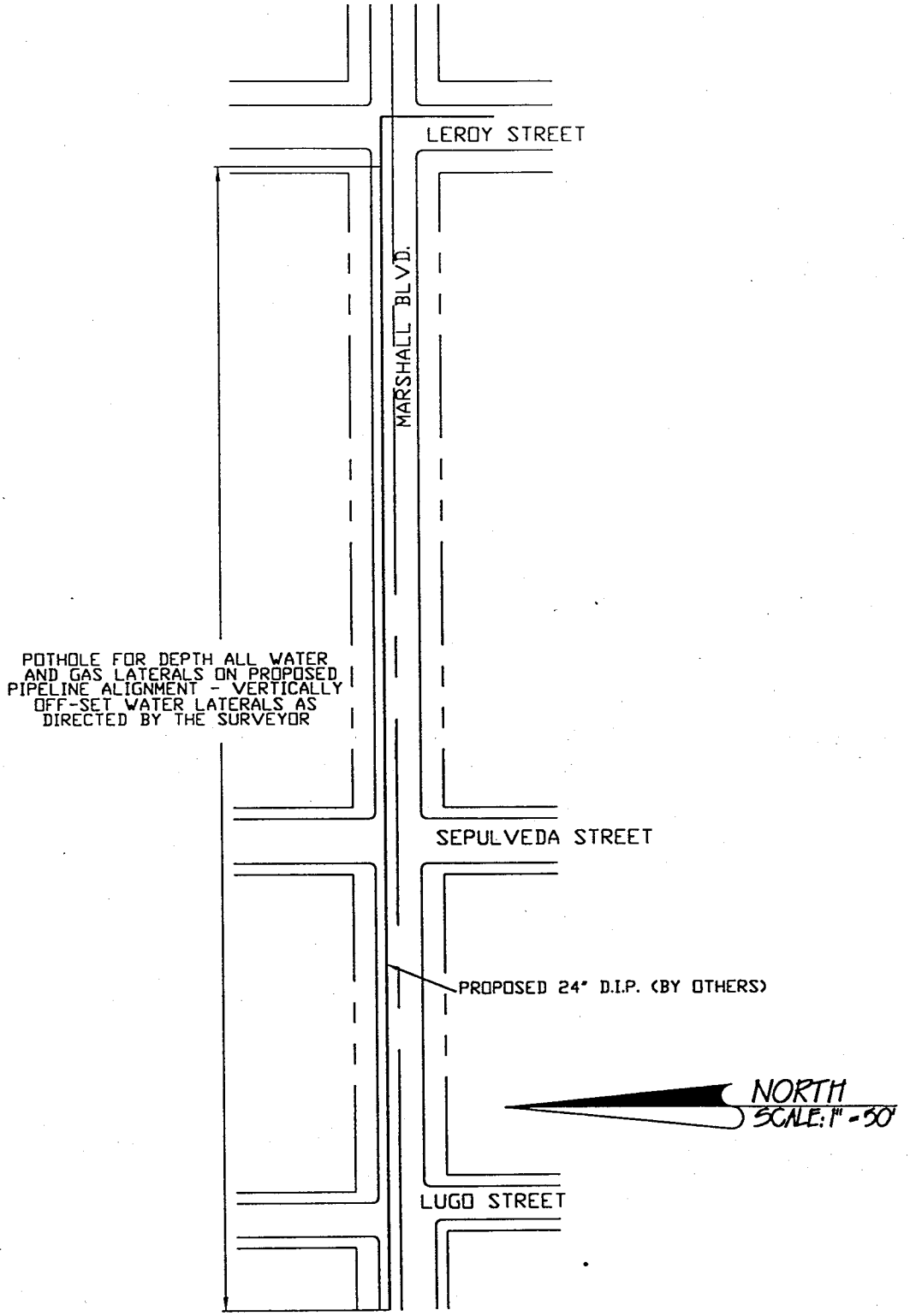

DESIGNED S.W. LEDBETTER

DRAWN BY S.W. LEDBETTER

CHECKED BY J.G. DYE

APPROVED 12-02 19 96

S.B.M.W.D. / PRINCIPAL ENGINEER
REGISTERED CIVIL ENGINEER NO. 28981

CONSTRUCTION ORDER # 5273

SHEET 7 OF 8 SHEETS

CITY OF SAN BERNARDINO
MUNICIPAL WATER DEPARTMENT
300 N. D STREET, SAN BERNARDINO, CA. 92418 • (909) 384 - 5391

US-EPA
SOUTH PLANT TRANSMISSION PIPELINE
POTHOLE EXISTING WATER & GAS LATERALS

File Location moondog d:\@data\autocad\US-EPA\co5273

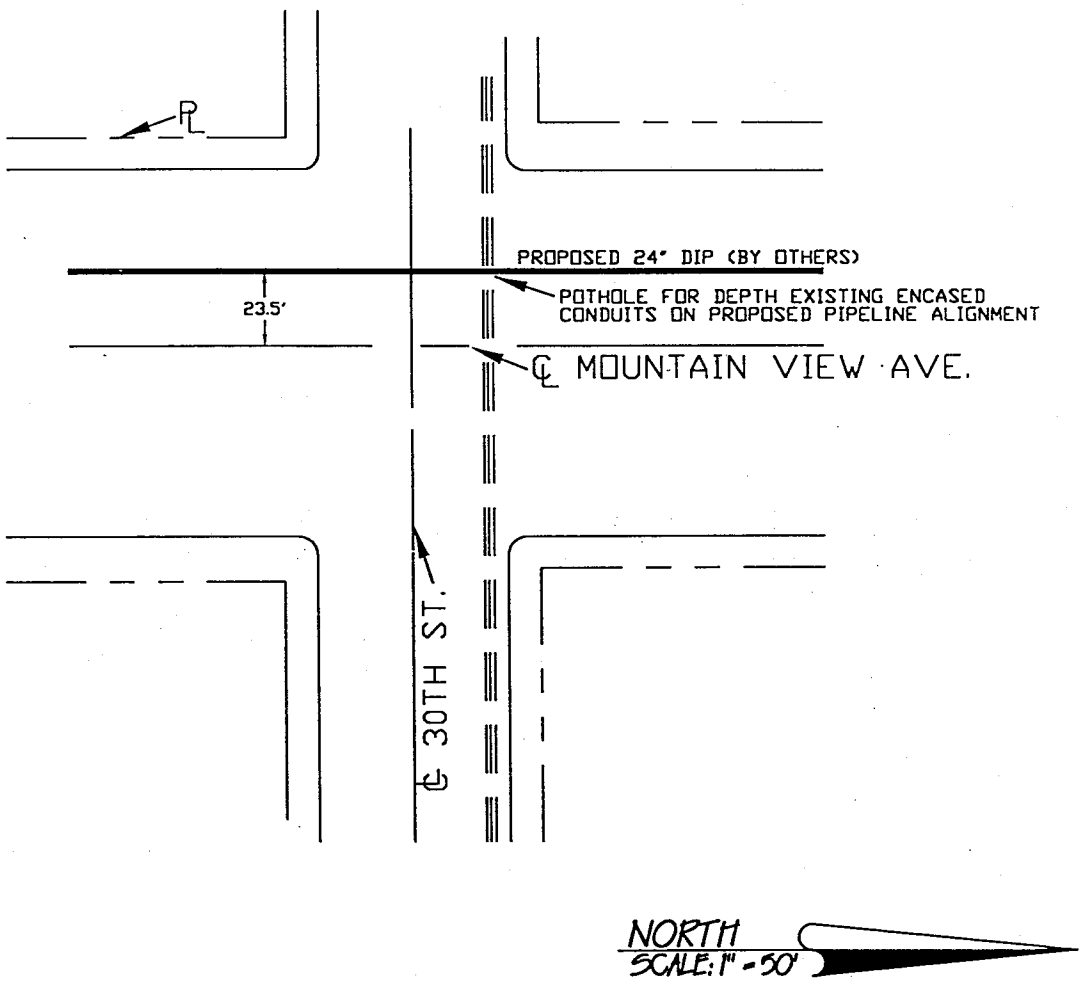

DESIGNED S.W. LEDBETTER	APPROVED 12-02 19 96	CITY OF SAN BERNARDINO
DRAWN BY S.W. LEDBETTER	S.B.M.W.D. / PRINCIPAL ENGINEER REGISTERED CIVIL ENGINEER NO. 28981	MUNICIPAL WATER DEPARTMENT
CHECKED BY J.G. DYE	CONSTRUCTION ORDER # 5273	300 N. D STREET, SAN BERNARDINO, CA. 92418 • (909) 384 - 5391
	SHEET 8 OF 8 SHEETS	US-EPA
		SOUTH PLANT TRANSMISSION PIPELINE POTHOLE EXISTING UTILITY CONDUITS

File Location moondog d:\@data\autocad\US-EPA\co5273

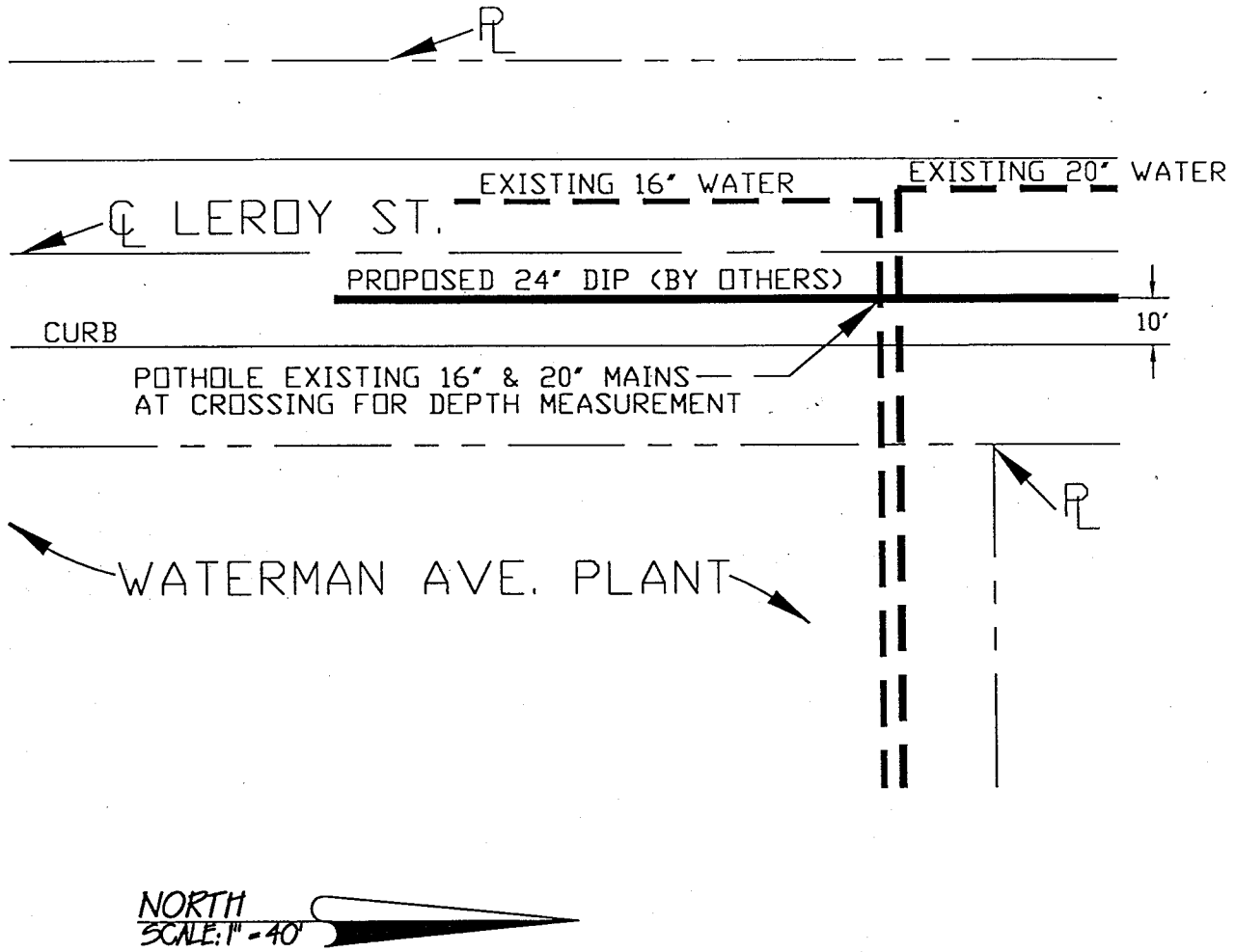

NORTH
SCALE: 1" = 40'

DESIGNED S.W. LEDBETTER	APPROVED 12-6-96 19 96 S.B.M.W.D. / PRINCIPAL ENGINEER REGISTERED CIVIL ENGINEER NO. 28981	CITY OF SAN BERNARDINO MUNICIPAL WATER DEPARTMENT 300 N. D STREET, SAN BERNARDINO, CA. 92418 • (909) 384 - 5391
DRAWN BY S.W. LEDBETTER	CONSTRUCTION ORDER # 5273	US-EPA SOUTH PLANT TRANSMISSION PIPELINE POTHOLE EXISTING WATER LINES
CHECKED BY J.G. DYE	SHEET 1 OF 8 SHEETS	

File Location moondog d:\@data\autocad\US-EPA\co5273