UNITED STATES ENVIRONMENTAL PROTECTION AGENCY
REGION IX
75 Hawthorne Street
San Francisco, CA 94105

Subject: Distribution of Newmark OU Final Documents

Dear Colleague (see Addressees list):

Enclosed you will find a CD with an electronic copy of the following reports, in pdf format.

1. Cost and Performance Report for Newmark Operable Unit Remedial Action, Newmark Groundwater Contamination Superfund Site

2. Operation, Maintenance, and Performance Manual: Newmark Treatment System, Newmark Groundwater Contamination Superfund Site

3. Remedial Action Report for Newmark OU Remedial Action, Newmark Groundwater Contamination Superfund Site

Due to the high cost of printing these reports, hard copies distribution are very limited. If you would like to have one , please let me know.

Thank you for your interest. I look forward to our continued collaboration in the treatment of the Newmark groundwater contamination.

Sincerely,

/s/

Kim Hoang, Ph.D., M.P.H.
Remedial Project Manager
hoang.kim@epa.gov
Phone: (415) 972-3147
Fax: (415) 947-3526

Enclosure

cc: Dwayne Deutscher, URS-Greiner
Dennis Bane, URS-Greiner

Addressees:

Upper Santa Ana
C/o Mr. Anthony Araiza
West San Bernardino County Water District
855 West Baseline
PO Box 920
Rialto, CA 92377

Dwayne Deutscher
URS Corporation, Inc.
2520 Venture Oaks Way, Suite 250 North
Sacramento, CA 95833-3200

Terri Reeder
California Regional Water Quality Control Board
Santa Ana Region
3737 Main Street, Suite 500
Riverside, CA 92501-3339

B J Bailey
Army Corp of Engineers
Sacramento District
1323 J Street (CESPK-PM-H)
Sacramento, CA 95814-2922

Yasser Aref
Site Mitigation Unit
CalEPA/DTSC
5796 Corporate Ave,
Cypress, CA 90630

Yen Tran
CA Department of Health Services
So. CA Drinking Water Field Operations Branch
464 West Fourth Street, Suite 437
San Bernardino, CA 92401

William Bryden
City of San Bernardino Municipal Water Dept.
P.O. Box 710
San Bernardino, CA 92404

Lawrence M. Libeu
General Manager

San Bernardino Valley Water Conservation District
P.O. Box 1839
Redlands, CA 92373-0581

Daniel B. Cozard
Santa Ana Watershed Project Authority
11615 Sterling Ave.
Riverside,CA 92503

Wesley R. Danskin
United States Geological Survey, Water Resources Div
5735 Kearny Villa Rd, Suite O
San Diego,CA 92123

Don Hough
Riverside Highland Water Company
1450 East Washington Street
Colton,CA 92324

Loraine June
City of Colton
160 S. 10th Street
Colton,CA 92324

Bob Martin
East Valley Water District
P.O. Box 3427
San Bernardino, CA 92413

Zarah Panahi
City of Riverside
Public Utilities Dept.
3900 Main Street, 4th Floor
Riverside, CA 92507

Bob Reiter
General Manager
San Bernardino Valley Municipal Water District
1350 South "E" Street
San Bernardino, CA 92412

Rick Wellington
City of Rialto
Water Department
150 S. Palm Ave.
Rialto, CA 92376

NEWMARK GROUNDWATER CONTAMINATION SUPERFUND SITE
NEWMARK OPERABLE UNIT REMEDIAL ACTION

COST AND PERFORMANCE REPORT

FINAL

Prepared for:

Contract No. 68-W-98-225 / WA No. 015-RARA-09J5
U.S. Environmental Protection Agency
Region IX
75 Hawthorne Street
San Francisco, California 94105

Prepared by:

URS Group, Inc.
2520 Venture Oaks Way, Suite 250
Sacramento, California 95833

October 2004

DISCLAIMER

This report has been prepared for the United States Environmental Protection Agency (EPA) by URS Group, Inc. (URS). This document presents a summary of the costs associated with the Newmark Operable Unit (OU) Remedial Action work assignment (WA) and the performance of the associated equipment and facilities. The project is at the Newmark Groundwater Contamination Superfund Site (Site), Newmark OU, in San Bernardino, California.

This report has been prepared by URS under the review of registered professionals. The data and conclusions in this report are based on information provided to URS by others and on information from URS contract files. The summaries, interpretations, and conclusions presented in this report were governed by URS' experience and professional judgment.

This page intentionally left blank.

TABLE OF CONTENTS

Section **Page**

DISCLAIMER i
ACRONYMS AND ABBREVIATIONS v

1.0 EXECUTIVE SUMMARY 1-1

2.0 SITE INFORMATION 2-1
2.1 Identifying Information 2-1
2.2 Technology Application 2-1
2.3 Background 2-1
2.4 Site Logistics/Contacts 2-3

3.0 MATRIX AND CONTAMINANT DESCRIPTION 3-1
3.1 Matrix Identification 3-1
3.2 Site Geology and Hydrogeology 3-1
3.3 Contaminant Characterization 3-2
3.4 Contaminant Properties 3-2
3.5 Nature and Extent of Contaminants 3-3
3.6 Matrix Characteristics Affecting Treatment Cost or Performance 3-3
3.6.1 Soil Classification 3-3
3.6.2 Clay Content and/or Particle-Size Distribution 3-3
3.6.3 Presence of NAPLS 3-3
3.6.4 Groundwater pH 3-4
3.6.5 Pumping Rate 3-4
3.6.6 Other Miscellaneous Parameters 3-4

4.0 TREATMENT SYSTEM DESCRIPTION 4-1
4.1 Primary Treatment Technology Types 4-1
4.2 Supplemental Treatment Technology Types 4-1
4.3 Timeline 4-1
4.4 Treatment System Schematic 4-1
4.5 Health and Safety Requirements 4-2
4.6 Key Design Criteria 4-2
4.7 Operating Parameters Affecting Cost or Performance 4-8
4.7.1 System Throughput 4-8
4.7.2 Pumping Rate 4-8

5.0 PERFORMANCE DATA ASSESSMENT 5-1
5.1 Performance Objectives 5-1
5.2 Treatment Plan 5-1
5.3 Performance Data 5-1
5.4 Performance Data Assessment 5-3
5.4.1 Flow to the Treatment Plants 5-4
5.4.2 Influent and Effluent PCE and TCE Concentrations 5-4

TABLE OF CONTENTS (Continued)

5.4.3 VOC Mass Removal 5-5
5.4.4 Performance Summary 5-5
5.5 Performance Data Quality 5-5

6.0 TREATMENT SYSTEM COST 6-1

7.0 REGULATORY AND INSTITUTIONAL ISSUES 7-1

8.0 SCHEDULE 8-1

9.0 OBSERVATIONS AND LESSONS LEARNED 9-1
9.1 Cost Observations and Lessons Learned 9-1
9.2 Off-Gas Corrective Actions 9-1
9.3 Other Observations and Lessons Learned 9-1

10.0 POINTS OF CONTACT 10-1

11.0 REFERENCES 11-1

LIST OF APPENDICES

APPENDIX A Parts List
APPENDIX B System Drawings
APPENDIX C Letters and Notifications

LIST OF TABLES

Table 2-1 Site Identifying Information 2-1
Table 3-1 Properties of Primary Contaminants 3-2
Table 4-1 Chronology of Events 4-1
Table 4-2 North Plume Extraction Wells 4-2
Table 4-3 Design Basis for LPGAC System 4-3
Table 4-4 Design Criteria for Other LPGAC Components 4-4
Table 4-5 South Plume Extraction Wells 4-5
Table 4-6 Waterman Plant Design Basis for LPGAC Systems 4-5
Table 4-7 17th Street Plant Design Basis for LPGAC Systems 4-7
Table 4-8 Design Criteria for Other LPGAC Components, Waterman Plant 4-8
Table 5-1 Performance Information 5-2
Table 5-2 Treated Water Flow 5-4
Table 5-3 PCE and TCE Concentrations 5-4
Table 5-4 Carbon Summary 5-5
Table 6-1 Summary of Remedial Action Costs 6-2

ACRONYMS AND ABBREVIATIONS

ARCS	Alternative Remedial Contracts Strategy
ASTM	American Society for Testing and Materials
bgs	below ground surface
Cal/EPA	California Environmental Protection Agency
CAP	Cost and Performance
CLPAS	Contract Laboratory Program Analytical Services
DCE	dichloroethene
DHS	Department of Health Services
DTSC	Department of Toxic Substances Control
EPA	United States Environmental Protection Agency
ºF	degrees Fahrenheit
FS	feasibility study
GAC	granular activated carbon
gpm	gallons per minute
kg	kilogram
MCL	maximum contaminant level
MGD	million gallons per day
NAPL	nonaqueous phase liquids
O&M	operations and maintenance
ODW	Office of Drinking Water
OU	operable unit
PCE	tetrachloroethene
PMP	Performance Monitoring Program
PPE	personal protective equipment
RA	remedial action
RAC	Response Action Contracts
RAR	remedial action report
RD	remedial design
RI	remedial investigation
ROD	record of decision
RWQCB	Regional Water Quality Control Board
SBMWD	San Bernardino Municipal Water Department
SS	suspended solids

ACRONYMS AND ABBREVIATIONS

TCE	trichloroethene
TSS	total settleable solids
U.S. EPA	United States Environmental Protection Agency
USGS	United States Geological Survey
VOC	volatile organic compound
µg/L	micrograms per liter

1.0 EXECUTIVE SUMMARY

This Cost and Performance (CAP) Report summarizes the cost and performance of the treatment system for the Newmark Operable Unit (OU) at the Newmark Groundwater Contamination Superfund Site in northern San Bernardino, California. The report reflects the cost and performance of the system's 22-month operational period, from October 1998 to July 2000.

The source of the large plume of solvents (the Muscoy Plume), which contains tetrachloroethene (PCE) and trichloroethene (TCE), associated with this site is unknown. The United States Environmental Protection Agency (EPA) has been conducting a remedial investigation/feasibility study (RI/FS) since 1990.

The Record of Decision (ROD) (EPA, 1993) for an interim action for the Newmark OU was signed by EPA on August 4, 1993. The regulatory framework under which the site cleanup is occurring includes various agencies of the state of California that have been involved in the site since 1980. EPA has reached an agreement with the local water supply agency, the San Bernardino Municipal Water Department (SBMWD), to accept the treated water from this project. The state of California Environmental Protection Agency (Cal/EPA), Department of Toxic Substances Control (DTSC) division, has been active in investigating this site and providing wellhead treatment systems at the most critical wellfields. DTSC is also the support agency for the project, acting as the coordinator of the state's response to the project. The Department of Health Services (DHS), Office of Drinking Water, and the Regional Water Quality Control Board (RWQCB), Santa Ana Region, have played important roles at the Newmark site and will continue to be involved.

Groundwater samples within the Muscoy plume show maximum contaminant concentrations of less than 50 micrograms per liter (µg/L) of PCE, with lesser levels of TCE and other volatile organic compounds (VOCs). Chlorofluorocarbons also are present at concentrations below drinking water standards, or maximum contaminant levels (MCLs). The Newmark OU ROD from August 3, 1993 (EPA, 1993) determined that the water will be treated to meet drinking water standards for VOCs. EPA selected a remedy for the Newmark OU that involves extraction by pumping and treating large volumes of groundwater to remove VOCs using granular activated carbon (GAC) filtration. The interim remedy for the Newmark OU was selected to meet the following specific objectives:

- To inhibit the migration of groundwater contamination into clean portions of the aquifer;
- To limit additional contamination from continuing to flow into the Newmark OU plume area; and
- To begin to remove contaminants from the groundwater plume for eventual restoration of the aquifer to beneficial uses.

Influent water at the treatment plants has been sampled from the time the system began to operate. Influent concentrations were at or below MCLs and effluent concentrations were below MCLs. This indicates that the treatment plants were meeting the objective of VOC removal.

The total cost for the treatment system is approximately $16.44 million (see Table 6-1)**,** including cost of operating the system during the two years of Performance Evaluation period, as well as construction repair as identified during this 2-year period.

This report follows the format outlined in the *Guide to Documenting and Managing Cost and Performance Information for Remediation Projects*, EPA 542-B-98-007, October 1998.

This page intentionally left blank.

2.0 SITE INFORMATION

This Cost and Performance Report summarizes all activities and costs for the Newmark Operable Unit (OU) Remedial Action (RA). The RA activities were performed by URS Group, Inc. (URSG) for the United States Environmental Protection Agency (EPA).

2.1 IDENTIFYING INFORMATION

Table 2-1 summarizes the site identifying information.

TABLE 2-1

Site Identifying Information

Site Name	Newmark Groundwater Contamination Superfund Site
Site Location	San Bernardino, California
Operable Unit	Newmark Operable Unit
CERCLIS Number	CAD981434517
Record of Decision Date	34184
Source of Contamination	Unknown
Media Treated	Groundwater
Contaminants Treated	Tetrachloroethene Trichloroethene
Treatment System	Pump and Treat with Carbon Adsorption

2.2 TECHNOLOGY APPLICATION

The RA was implemented at the Newmark OU of the Newmark Groundwater Contamination Superfund Site in accordance with the objectives of the remedial design (RD). The ROD, which was issued on August 3, 1993, defines the approved technologies as pumping and treating using air stripping and carbon adsorption. The RA, which is based on the RD, is being implemented to achieve the remediation goals specified in the ROD. The entire RA includes the construction of groundwater extraction wells, construction of water transmission pipeline, construction and renovation of granulated activated carbon (GAC) treatment systems, and the construction of monitoring wells to assess and modify system performance, followed by one-year operation and performance monitoring. SBMWD operates the RA and constructed the extraction wells and pipeline. The construction of the entire treatment system was completed in 1998, the one-year performance monitoring phase has been completed, and the system is currently operating as intended.

During the first 22 months of system operations, from October 1998 to July 2000, a total of approximately 9.39 billion gallons of groundwater was treated.

2.3 BACKGROUND

EPA has been conducting a remedial investigation/feasibility study (RI/FS) for the Newmark Groundwater Contamination Superfund Site in northern San Bernardino since 1990. Various agencies of the state of California have been involved at the site since 1980. The Record of Decision (ROD) for an interim action for the Newmark OU was signed by EPA on August 3, 1993. The Newmark OU consists of the original

Newmark site, a large chlorinated solvent plume, including tetrachloroethene (PCE) and trichloroethene (TCE) beneath the city of San Bernardino, east of the Shandin Hills. This 7-mile-long plume has caused the closure of several public water supply wells and is threatening downgradient wells that supply water for approximately 600,000 people. A similar plume of PCE and TCE contaminated over 3 miles of aquifer on the western side of the Shandin Hills. Initially, this plume appeared to have a separate source from the Newmark Plume. However, the RI/FS for the Newmark project traced the plume upgradient, to the west of the originally suspected source, and showed that the source emanates from an area north and west of the Shandin Hills, establishing that the two plumes probably derive from the same release. Consequently, a second ROD was issued on March 24, 1995, for an interim action to inhibit the spread of the western plume of contamination in the second OU, the Muscoy Plume OU. A third OU, the Source OU, has been established to continue the RI/FS to identify and isolate the source and to develop a final plan for an integrated remediation of the entire site. A quarterly monitoring program has been established as part of the Source OU.

Groundwater samples within the Muscoy Plume OU show maximum contaminant concentrations of less than 50 micrograms per liter (µg/L) of PCE, with lesser levels of TCE and other volatile organic compounds (VOCs). Chlorofluorocarbons also are present at concentrations below drinking water standards, or maximum contaminant levels (MCLs). The ROD has determined that the water will be treated to meet drinking water standards for VOCs. EPA has selected a remedy for the Newmark OU that involves the extraction and treatment of large volumes of groundwater. The interim remedy for the Newmark OU was selected to meet the following specific objectives:

- To inhibit the migration of groundwater contamination into clean portions of the aquifer;
- To limit additional contamination from continuing to flow into the Newmark OU plume area; and
- To begin to remove contaminants from the groundwater plume for eventual restoration of the aquifer to beneficial uses.

In the ROD, EPA selected two pump-and-treat systems to accomplish these objectives.

EPA has reached an agreement with the local water supply agency, the San Bernardino Municipal Water Department (SBMWD), to accept the treated water from this project in exchange for a reasonable portion of the operating costs. SBMWD owns and operates several production wells, treatment systems, and distribution facilities that are incorporated into the Newmark OU remedy. Coordination with SBMWD continues to be an important component of the Newmark OU RA.

The U.S. Geological Survey (USGS) has produced a basinwide groundwater model, and the current USGS investigator has been cooperating with this RI. The state of California Environmental Protection Agency (Cal/EPA), Department of Toxic Substances Control (DTSC) division, has been active in investigating this site and providing wellhead treatment systems at the most critical wellfields. DTSC is also the support agency for the project, acting as the coordinator of the state's response to the project. The Department of Health Services, Office of Drinking Water (DHS-ODW), and the Regional Water Quality Control Board (RWQCB), Santa Ana Region, have played important roles at the Newmark site and will continue to be vitally involved. All of the water supply wells that have been affected to date are owned and operated by SBMWD. The wells of several other water purveyors, including the city of Riverside, are threatened by the advancing contaminant plume.

The RA also involves the continuation of the one-year implementation of performance monitoring of the Newmark OU treatment system. URSG will follow the approved *Performance Monitoring Program Field*

Sampling Plan Addendum to the Source OU LTMP Field Sampling Plan for Newmark Groundwater Contamination Superfund Site, Newmark OU Remedial Action in conducting the performance monitoring for the Newmark OU. Since SBMWD is primarily responsible for operating the treatment system, URSG coordination with SBMWD is essential for the successful implementation of the performance monitoring system.

2.4 SITE LOGISTICS/CONTACTS

Site Lead: City of San Bernardino Water Department

Oversight: EPA, Region IX

Regulatory Contact: Dr. Kim Hoang
Remedial Program Manager
Hazardous Waste Management Division
75 Hawthorne Street (H-G-4)
San Francisco, CA 94105-3901

Technology System Vendor/Consultant: URSG.

This page intentionally left blank.

3.0 MATRIX AND CONTAMINANT DESCRIPTION

3.1 MATRIX IDENTIFICATION

The type of matrix being treated in this remediation project is Groundwater Ex Situ.

3.2 SITE GEOLOGY AND HYDROGEOLOGY

The model area lies between two major northwest-trending faults (the San Andreas and the San Jacinto) forming the San Bernardino Valley. The San Bernardino Valley is filled with water-bearing alluvial deposits derived from the San Gabriel Mountains to the northwest and the San Bernardino Mountains to the northeast. Bedrock underlying the alluvium is composed of pre-Tertiary igneous and metamorphic rocks. The San Gabriel Mountains, the San Bernardino Mountains, and the various hills scattered throughout the study area also are composed of bedrock materials. The alluvium consists of boulders, gravel, sand, silt, and clay of late Tertiary and Quaternary age (Dutcher and Garrett, 1963).

Several echelon faults are present in the region between the two major faults. The Loma Linda fault is approximately one mile northeast of the San Jacinto fault and extends across the model area in a northwest/southeast trend. Fault K is approximately one and one-half miles south of the San Andreas fault and trends northwest/southeast. Fault K has been mapped as extending from the vicinity of the Newmark wellfield directly north of the Shandin Hills to the northwest, north of Wiggins Hill and out of the study area.

Alluvial thicknesses in the San Bernardino Valley area vary considerably, with maximum alluvial thickness occurring adjacent to the northeastern side of the San Jacinto fault (Fife et al., 1976; Hardt and Hutchinson, 1980). Alluvial thicknesses increase from 400 feet at the Newmark wellfield, near the base of the San Bernardino Mountains, to at least 2,100 feet at the Loma Linda/San Jacinto fault zone near the center of the San Bernardino Valley (Youngs et al., 1981). Alluvial thicknesses are based on the interpretation of drillers' logs. The northern portion of the study area, just south of the San Bernardino Mountains, consists predominantly of sand, gravel, and boulders, with little or no clay. The drillers' log for the Waterman Avenue well (parallel to the southern edge of the Shandin Hills) documents the northernmost occurrence of a substantial amount of clay. Clay lenses increase in number and thickness toward the central and southern portion of the valley.

Within the study area, ground- and surface-water issues are confined to the area occupied by the Bunker Hill groundwater basin, as described by Dutcher and Garrett (1963). This basin is bounded by the San Bernardino Mountains to the northeast, the Crafton Hills and the Badlands on the south, and the San Jacinto fault on the southwest.

The principal aquifer in the Bunker Hill basin is the older alluvium, which is overlain by younger alluvium. This aquifer is further divided into two units, an upper aquifer, which remains unconfined, and a lower aquifer, which is confined by the overlying zone of interfingered lower permeability silt and clay lenses.

Groundwater movement in the study area follows the Bunker Hill basin surface drainage pattern. The basin groundwater generally moves southward, with groundwater in Lytle Creek moving in a southeastern direction. Groundwater presence also is evident in the appearance of artesian-type wells. Where the potentiometric head (the groundwater-level potential) is above the confining beds in this area, and the San Jacinto fault ("Bunker Hill Dike") restricts lateral groundwater flow, groundwater is forced through and around the clay beds into the overlying strata and onto the land surface.

The significance of surface water within the study area is its importance in recharging the groundwater aquifer. Three main tributary streams, the Santa Ana River, Mill Creek, and Lytle Creek, contribute more than 60 percent of the recharge to the groundwater system. During storm periods, streamflow emerges from mountain canyons along the valley perimeter and moves down the alluvial fans, where a large part of the flow infiltrates the fan's permeable surficial deposits. In the 20-year period from 1963 through 1982, recharge to the groundwater basin increased substantially. A sequence of wet years produced greater-than-average natural streamflow and greater percolation through the streambeds.

3.3 CONTAMINANT CHARACTERIZATION

The ROD identifies two chlorinated solvents, PCE and TCE, as the primary contaminants. These contaminants are classified as organic halogenated volatile compounds.

3.4 CONTAMINANT PROPERTIES

Table 3-1 presents the properties of the primary contaminants.

TABLE 3-1

Properties of Primary Contaminants

Property	PCE	TCE
Common Names	Tetrachloroethene Tetrachlorethylene Perchlorethylene Perchloroethylene	Trichloroethene Trichloroethylene Ethylene trichloride Trilene
Molecular Weight	165.8	131.4
Boiling Point	250°F	189°F
Solubility in Water	0.02%	0.1%
Flash Point	Not Applicable	Not Applicable
Ionization Potential	9.32 eV	9.45 eV
Specific Gravity	1.62	1.46
Vapor Pressure @ 25° C	14 mm	58 mm
Freezing point	-2°F	-99°F
Upper Explosive Limit in Air	Not Applicable	10.5 % (77°F)
Lower Explosive Limit in Air	Not Applicable	8 % (77°F)

ºC = degrees Celsius
eV = electron volt
ºF = degrees Fahrenheit
mm = millimeter
PCE = tetrachloroethene
TCE = trichloroethene

3.5 NATURE AND EXTENT OF CONTAMINANTS

The extent of contamination is unknown. Monitoring wells confirm the level and rate of change of contamination. A more complete discussion of the nature and extent of contamination is provided in the *Newmark Plume Operable Unit Remedial Action, Newmark Groundwater Contamination Superfund Site, Project Performance Report* (URS, 2004).

3.6 MATRIX CHARACTERISTICS AFFECTING TREATMENT COST OR PERFORMANCE

This section presents and discusses factors that affect the operating cost and performance involved in using GAC for groundwater remediation. According to the *Guide to Documenting and Managing Cost and Performance Information for Remediation Projects* (EPA, 1998), the following matrix characteristics affect operating cost and performance for groundwater remediation pump and treat technologies:

- Soil classification;
- Clay content and/or particle-size distribution;
- Hydraulic conductivity;
- Depth below ground surface (bgs) / thickness of zone of interest; and
- Presence of nonaqueous phase liquids (NAPLs).

The guide cites the following characteristics as operating parameters that affect cost and performance:

- pH;
- Pumping rate; and
- Other miscellaneous parameters.

This RA uses GAC as the preferred pump and treat technology; the effect of each of these characteristics on GAC is discussed hereafter.

3.6.1 Soil Classification

Soil classification is a semi-empirical measurement of sand, silt, clay, gravel and loam content. Several soil classification methods are in use, including the American Society for Testing and Materials (ASTM) Standard D 2488-00, the *Practice for Description and Identification if Soils (Visual-Manual Procedure)*. For this project, soil classification and the classification of soil have no effect on the cost and performance of pumping and treating GAC.

3.6.2 Clay Content and/or Particle-Size Distribution

Clay content and/or particle size have no effect on the cost or performance of pumping and treating with GAC. There have been no direct measurements of suspended solids (SS) or total settleable solids (TSS); however, neither turbidity nor the Tyndall effect is observed visually, indicating that clay content is not an issue and does not affect cost or performance.

3.6.3 Presence of NAPLS

No NAPLs are present in the groundwater.

3.6.4 Groundwater pH

Groundwater pH from all of the extraction wells within the Newmark OU is essentially neutral, or pH 7. Fluctuations in pH will occur with differing amounts of carbon dioxide dissolution; however, this will not affect the removal ability of the GAC. Groundwater pH does not affect the cost or performance of GAC.

3.6.5 Pumping Rate

Well pumping rate was sized to match the GAC column residence time for the optimal removal of PCE and TCE. Lower pumping rates will result in longer residence or contact times and higher removal efficiencies. Pumping rates should not significantly exceed the design value of 700 gallons per minute (gpm) per series pair of GAC vessels because removal efficiencies will decrease.

3.6.6 Other Miscellaneous Parameters

The contaminants of concern, TCE and PCE, are removed by adsorption to GAC. Other parameters that can affect cost and performance are water temperature, the presence of other contaminants that could impede adsorption or desorb PCE and TCE, and the concentrations of PCE and TCE in the groundwater.

The removal efficiency of the GAC columns decreases with increasing temperature. The average operating temperature of the groundwater is approximately 55 to 65 degrees Fahrenheit (°F). Normal variations in groundwater temperature will not affect cost or performance.

Other contaminants present in the groundwater are cis-1,2-dichloroethene (cis-1,2-DCE), chloroform, chloroethane, methylene chloride, toluene, and Freon 11 and 12. The GAC columns have been sized correctly to account for the adsorptive capacity of these other contaminants. The presence of these contaminants will not affect cost or performance.

4.0 TREATMENT SYSTEM DESCRIPTION

4.1 PRIMARY TREATMENT TECHNOLOGY TYPES

The ROD identified a remedy for the Newmark OU that included groundwater extraction by pumping and groundwater treatment with carbon adsorption or air stripping. The primary treatment technology type is Groundwater Ex Situ, pump and treat with carbon adsorption.

4.2 SUPPLEMENTAL TREATMENT TECHNOLOGY TYPES

There are no supplemental treatment technology types for this OU.

4.3 TIMELINE

Table 4-1 summarizes the chronology of the RA construction.

TABLE 4-1

Chronology of Events

Contractor	Construction Phase	Construction Element	Time Period
URSG	Water Treatment Plants	Newmark North Water Treatment Plant	September 1997 - July 1998
		Newmark South Water Treatment Plant	September 1997 - July 1998
		17th Street Plant Retrofit	August 1998 - October 1998
		GAC Vessels	June 1997 - September 1998
	Pipelines	Freeway Bridge Overcrossing	April 1998 - June 1998
	Monitoring Wells	MW-12 through MW-15	August 1997 - October 1997
		MW-16 through MW-17	October 1997 - November 1997
SBMWD	Pipelines	North Pipeline	March 1998 - October 1998
		South Pipeline	September 1996 - October 1998
	Extraction Wells	North Well EW-6, EW-7, Newmark-3	September 1996 - May 1997
		EW-1 through EW-5	September 1996 - May 1997

EW = extraction well
GAC = granular activated carbon
MW = monitoring well
SBMWD = San Bernardino Municipal Water District

4.4 TREATMENT SYSTEM SCHEMATIC

Appendix A includes a parts list for each of the plant yard piping components, carbon vessel components, and electrical components.

Appendix B includes chemical drawings, mechanical drawings, electrical drawings, hydraulic drawings, and pipeline diagrams.

The annual O&M costs were requested from SBMWD but have not been provided.

4.5 HEALTH AND SAFETY REQUIREMENTS

The following health and safety requirements should be observed while operating the facility. However, this section does not replace or usurp the fiduciary health and safety responsibility of the SBMWD, which is responsible for operating the Newmark OU.

The operator(s) must be trained and knowledgeable in all applicable sections of California and federal Occupational Safety and Health Administration (Cal/OSHA and Fed/OSHA); it is the responsibility of the SBMWD to assure that appropriate training requirements have been met and are up-to-date.

The SBMWD is responsible for the appropriate selection of personal protective equipment (PPE). However, the following caution is provided in regard to GAC columns. **Wet activated carbon preferentially removes oxygen from air. In closed or partially closed containers and vessels, oxygen depletion may reach hazardous levels. If workers are to enter a vessel containing carbon, appropriate sampling and work procedures for potentially low oxygen spaces should be followed, including all applicable federal and state requirements.**

4.6 KEY DESIGN CRITERIA

TABLE 4-2

North Plume Extraction Wells

Extraction Well No.	Total Depth (ft)	Screened Intervals (ft)	Diameter (in)	Flow Rate (gpm)	Pump Type
Newmark-3 (Existing)	495	232-270 283-305 331-462	16	1600	Line Shaft Turbine
EW-6 (New)	360	115-315	16	1000	Submersible
EW-7 (New)	498	200-470	16	1300	Submersible

Note:

Total depths, screened intervals, and diameters of the wells are based on information provided by the SBMWD.

ft = foot
in = inch
gpm = gallons per minute
SBMWD = San Bernardino Municipal Water District

TABLE 4-3

Design Basis for LPGAC System

Influent Pipe (From Wells to System)	
Material	Steel Schedule 40 and Ductile Iron
Diameter	16 in
Carbon System	
Carbon Unit Type	Northwestern Carbon LF-810
Number of Carbon Units	7 serial pairs in parallel
Total Design Flow Rate	4,875 gpm
Design Flow Rate per Pair	696 gpm
Weight of Carbon per Unit	20,000 lb
Weight of Carbon per Pair	40,000 lb
Carbon Usage Rate (estimated)	386 lb/day
Estimated Carbon Life	362 days
Diameter per Vessel	10 ft
Carbon Unit Height	≈20 ft overall
Carbon Unit Shipping Weight (per pair)	48,000 lb
Carbon Unit Weight (operating, per pair)	253,000 lb
Carbon Volume per Unit	714 ft^3
Flange Connection	8-in pipe
Carbon Unit Pressure Rating	75 psi
Unit Material	Mild Steel
External Coating	Prime and Paint
Internal Coating	Vinyl Ester
Piping Material	Steel Schedule 40
Backwash Type	Manual Valve
Carbon	
Type of Carbon	Virgin or Reactivated Filtrasorb 300
Apparent Density	28-30 lb/ft^3
Pore Volume	0.85 cm^3/g
Hardness	75 minimum
U.S. Standard Sieve Size	8 x 30
Larger than No. 8, maximum	5%
Smaller than No. 30, maximum	5%
Mean Particle Diameter	0.8 - 1.0 mm
Moisture	2%
Iodine Number (AWWA)	900 minimum
Backwash	
Flow	1,500 gpm, maximum
Time	15 minutes
Volume	3,000 ft^3

TABLE 4-3 (Cont'd)

Electrical (Controls)	
Requirements	120 volt single-phase
Location	Existing Transformer/Control Room
Emergency Power	None
Process Controls	To be determined
Reservoir Hydraulic Grade Line	1,416 ft

AWWA = American Water Works Association
cm^3/g = cubic centimeters per gram
ft = foot
ft^3 = cubic feet
gpm = gallons per minute
in = inch
lb = pound
LPGAC = liquid-phase granular activated carbon
mm = millimeter
psi = pounds per square inch

TABLE 4-4

Design Criteria for Other LPGAC Components

Component	Design Criteria	Design Dimension
Backwash Water Supply	System water	1,500 gpm 70 to 90 psi
Spent Backwash Collection Sumps	Storage volume Length, total Width, each Average depth	22,500 gallons 203 ft 5.5 ft 3.6 ft and 3.3 ft

gpm = gallons per minute
psi = pounds per square inch
LPGAC = liquid-phase granular activated carbon

TABLE 4-5

South Plume Extraction Wells

Newmark Extraction Well No.	Total Depth (ft)	Screened Intervals (ft)	Diameter (in)	Flow Rate[a] (gpm)	Pump Type
1	1200	600 - 1,180	16	1700	Submersible
2	1080	500 - 1,070	16	1700	Submersible
3	810	240 - 280 320 - 400 500 - 800	16	2000	Submersible
4	1200	490 - 1,180	16	1700	Submersible
5	1150	400 - 1,130	16	1700	Submersible

[a] The flow rate from each extraction well is based on the groundwater modeling. The design flow rate through the conveyance pipeline and treatment plant is obtained by adding a 10% factor of safety to the flow rate shown in the table.
Total depths, screened intervals and diameters of the wells are based on information provided by the SBMWD.
Newmark-3 will be piped directly to the 17th Street Plant.
Newmark EW-2, EW-4, and EW-5 will be piped to the Waterman Plant.
Newmark EW-1 will be piped to the Muscoy OU Water Treatment Plant, which is proposed at 9th Street and Garner Avenue (on the southwestern corner of Encanto Park).

ft = foot
in = inch
gpm = gallons per minute
SBMWD = San Bernardino Municipal Water District

TABLE 4-6

Waterman Plant Design Basis for LPGAC Systems

Influent Pipe Yard Piping	
Material (all new plant piping)	Steel Schedule 40 standard weight
Diameter	24 in
Carbon System	
Carbon Unit Type	Northwestern Carbon LF-810
Number of Carbon Units	8 serial pairs in parallel
Total Design Flow Rate	5,610 gpm
Design Flow Rate per Pair	700 gpm
Weight of Carbon per Unit	20,000 lb
Weight of Carbon per Pair	40,000 lb
Carbon Usage Rate (estimated)	445 lb/day
Estimated Carbon Life	360 days
Diameter per Vessel	10 ft
Carbon Unit Height	≈ 20 ft overall
Carbon Unit Shipping Weight (per pair)	48,000 lb
Carbon Unit Weight (operating, per pair)	253,000 lb
Carbon Volume per Unit	714 ft^3

TABLE 4-6 (Cont'd.)

Carbon System (cont'd)	
Flange Connection	8-in pipe
Carbon Unit Pressure Rating	75 psi
Unit Material	Mild steel
External Coating	Prime and paint
Internal Coating	Vinyl ester
Piping Material	Steel Schedule 40
Backwash Type	Manual valve
Carbon	
Type of Carbon	Virgin or reactivated Filtrasorb 300
Apparent Density	28 - 32 lb/ft^3
Pore Volume	0.85 cm^3/g
U.S. Standard Sieve Size	8 x 30
Larger than No. 8, maximum	15%
Smaller than No. 30, maximum	5%
Effective Particle Size	0.8 - 1.0 mm
Moisture, maximum	2%
Iodine Number (AWWA)	900 minimum
Abrasion Number, minimum	75
Uniformity Coefficient, maximum	2.1
Backwash	
Flow	1,500 gpm, maximum
Time	15 minutes
Volume	3,000 ft^3
Electrical (Controls)	
Requirements	120-volt single phase
Location	Existing Transformer/Control Room
Emergency Power	None
Process Controls	To Be Determined
Reservoir Hydraulic Grade Line	1,249 ft

AWWA = American Water Works Association
cm^3/g = cubic centimeters per gram
ft = foot
ft^3 = cubic feet
gpm = gallons per minute
in = inch
lb = pound
LPGAC = liquid-phase granular activated carbon
mm = millimeter
psi = pounds per square inch

TABLE 4-7

17th Street Plant Design Basis for LPGAC Systems

Influent Pipe Yard Piping	
Material (all new plant piping)	Steel Schedule 40 standard weight
Diameter	16 in
Carbon System	
Carbon Unit Type	Existing
Number of Carbon Units	6 vessels in parallel, to be modified for serial operation
Total Design Flow Rate	2,200 gpm
Design Flow Rate per Pair	733 gpm
Weight of Carbon per Unit	20,000 lb
Carbon Usage Rate (estimated)	174 lb/day
Estimated Carbon Life	344 days
Diameter per Vessel	≈11 ft
Carbon Unit Height	≈ 20 ft overall
Carbon Volume per Unit	714 ft^3
Carbon Unit Pressure Rating	75 psi
Unit Material	Mild steel
External Coating	Prime and paint
Internal Coating	Vinyl ester
Piping Material	Steel Schedule 40
Backwash Type	Manual valve
Carbon	
Type of Carbon	Virgin or reactivated Filtrasorb 300
Apparent Density	28-32 lb/ft^3
Pore Volume	0.85 cm^3/g
U.S. Standard Sieve Size	8 x 30
Larger than No. 8, maximum	15%
Smaller than No. 30, maximum	5%
Effective Particle Size	0.8 - 1.0 mm
Moisture, maximum	2%
Iodine Number (AWWA)	900 minimum
Abrasion Number, minimum	75
Uniformity Coefficient, maximum	2.1
Backwash	Existing
Electrical	Existing
Process Controls	To be determined
Reservoir Hydraulic Grade Line	1,151 ft

AWWA = American Water Works Association
cm^3/g = cubic centimeters per gram
ft = foot
ft^3 = cubic feet
gpm = gallons per minute
in = inches
lb = pound
LPGAC = liquid-phase granular activated carbon
mm = millimeter
psi = pounds per square inch

TABLE 4-8

Design Criteria for Other LPGAC Components, Waterman Plant

Component	Design Criteria	Design Dimension
Waterman Plant		
Backwash Water Supply	System water	1,500 gpm @ 90 psi
Spent Backwash Collection Sumps	Storage volume Length, each Width, each Average depth, each	22,500 gal 116 ft 5.5 ft 3.6 ft
17th Street Plant		
Backwash Water Supply	System Water	Existing

ft = foot
gal = gallon
gpm = gallons per minute
LPGAC = liquid-phase granular activated carbon
psi = pounds per square inch

4.7 OPERATING PARAMETERS AFFECTING COST OR PERFORMANCE

The guidance identifies two primary parameters affecting cost or performance for pump and treat using GAC. System throughput, or capacity, directly affects capital cost (capacity is directly related to equipment size, which directly affects capital costs). The pumping rate affects both cost and performance. The design pumping rate is determined, in part, by the ROD objectives. Pumping rate directly affects capital equipment cost and operating costs through energy and maintenance.

4.7.1 System Throughput

The total design flowrate for the Waterman Plant LPGAC system is 5,610 gpm, or 700 gpm for each of eight pair of LPGAC.

The total design flowrate for the 17th Street LPGAC system is 2,200 gpm, or 733 gpm for each of three pair of LPGAC.

4.7.2 Pumping Rate

The design pumping rates for the new extraction wells are as follows:

- Newmark Plume front extraction wells from west to east: 1,700 gpm, 1,700 gpm, 2,000 gpm, 1,700 gpm, 1,700 gpm.
- Muscoy Plume front extraction wells from west to east: 1,300 gpm each.

5.0 PERFORMANCE DATA ASSESSMENT

5.1 PERFORMANCE OBJECTIVES

As presented in the ROD, the RA was developed to meet the following objectives for the Newmark OU:

- To inhibit the migration of groundwater contamination into clean portions of the aquifer;
- To limit additional contamination from continuing to flow into the Newmark OU Plume area; and
- To begin to remove contaminants from the groundwater plume for eventual restoration of the aquifer to beneficial uses (this is a long-term project objective rather than an immediate objective of the interim action).
- After treatment, the water will meet drinking water standards (maximum contaminant levels [MCLs]) for VOCs.

5.2 TREATMENT PLAN

The selected remedy involves groundwater extraction at the leading edge of the contaminant plume and where the contamination enters the eastern part of the valley. Various locations and scenarios for extraction wells and rates of extraction were proposed in the FS report for the Newmark OU; however, all design decisions for this interim remedy were made during the RD phase. During the RD phase, the locations proposed for extraction wells and scenarios for rates of extraction per individual well were selected. The exact number, location, and other design specifics of new extraction wells were determined during the RD phase of the project to inhibit the migration of the contaminant plume most effectively. Wherever appropriate, existing water production wells were used for the remedy, and new wells were constructed as necessary, as discussed in the *Remedial Investigation/Feasibility Study for Newmark RI/FS Groundwater Contamination Project* (URS, 1993).

All of the extracted contaminated groundwater is treated to remove VOCs by adsorption. EPA determined during the FS (March 1993) that this treatment technology is effective for removing VOCs and has been proven to be reliable in similar applications. During the RD phase, when more detailed information was available to assess effectiveness and cost, it was determined that this VOC treatment technology best met the objectives of the remedy for the Newmark OU. The treated water exiting the treatment plant has met all MCLs and secondary drinking water standards.

5.3 PERFORMANCE DATA

Table 5-1 summarizes the information regarding treatment system performance .

The field activities associated with the Performance Monitoring Program (PMP) consisted of water-level monitoring, groundwater sampling, and treatment system performance monitoring. Three PMP activities were related to the full-scale startup of the Newmark OU groundwater extraction and treatment systems. These included the initial start-up of Newmark-3, startup and optimization of the North and South Plants, and operation and monitoring of the extraction system.

TABLE 5-1

Performance Information

Project status	Ongoing. Report covers period October 1998 through July 2000.	
Types of samples collected	Groundwater samples. Analyzed for VOCs.	
Sample frequency and protocol	SBMWD samples all systems quarterly or semi-annually.	
Quantity of material treated	Approximately 9.39 billion gallons of groundwater were treated from October 1998 through July 2000.	
Observed average levels of PCE and TCE in the influent during the performance period	Newmark PCE 6.4 µg/L, TCE 0.8 µg/L Waterman PCE 0.9 µg/L, TCE 0.4 µg/L 17th Street PCE 3.4 µg/L, TCE 0.86 µg/L	
	Observed Average Influent Concentrations (µg/L)	Observed Average Effluent Concentrations (µg/L)
Newmark Treatment Plant	PCE 6.4 TCE 0.8	ND
Waterman Treatment Plant	PCE 0.9 TCE 0.4	ND
17th Street Treatment Plant	PCE 3.4 TCE 0.86	ND
Average effluent concentrations (µg/L) of PCE and TCE at the Newmark, Waterman, and 17th Street Treatment Plants were not detected.		
Cleanup/remediation objectives	Cleanup goals for groundwater (based on the site ROD): TCE - 5 µg/L (MCL) PCE - 5 µg/L (MCL) Containment of the contaminant plume.	
Comparison with cleanup objectives	Cleanup goals have been met to date. Plume containment has been achieved.	
Method of analyses	Method 160.1 for non-filterable residue (= total dissolved solids) Method 160.2 for filterable residue (= total suspended solids) Method 200.7 for ICP metals Method 2320 for alkalinity Method 415.2 for total organic carbon Method 608 for organochlorine pesticides and PCBs Method 624/25ML for volatile organics (VOCs/purgeable) with 25 ml purge for low detection limits Method 625/LL for semivolatile organics (SVOCs/BNAs) with liquid-liquid (LL) extraction	
QA/QC	QAPP prepared for project. URSG was responsible for QA/QC. Trip blanks, field blanks, equipment blanks, field duplicates, environmental samples, matrix spike and matrix spike duplicate samples were taken.	
Other residues	None generated.	

BNA = base/neutral acid extractables
ICP = inductively coupled plasma
MCL = maximum contaminant level
ml = milliliter
ND = not detected
PCB = polychlorinated biphenyls
PCE = tetrachloroethene
QA = quality assurance
QAPP = quality assurance project plan
QC = quality control
ROD = record of decision
SBMWD = San Bernardino Municipal Water District
SVOC = semivolatile organic compound
TCE = trichloroethene
VOC = volatile organic compound
µg/L = micrograms per liter

Dedicated data loggers and pressure transducers were installed in the monitoring wells to continuously record water levels. Water levels from the extraction wells/piezometers were supplied by the SBMWD. Groundwater samples were collected prior to full-scale system startup and then monthly for the duration of the startup period from October 1998 to July 2000. Groundwater sampling frequency was reduced to quarterly for the remainder of the one-year operational period.

GAC treatment system performance monitoring ensures that the systems are performing as intended. The objective of the GAC treatment system is to remove the contamination from the extracted water so that the treated water meets effluent requirements. Monitoring is required to ensure that effluent objectives are met, to determine when carbon must be regenerated and backwashing must be performed, and to evaluate operational problems. Treatment system performance monitoring involves collecting and analyzing water samples at the following three locations within the flow streams of the GAC units: the influent sample to the primary GAC unit, the effluent sample from the primary GAC unit, and the effluent sample from the secondary GAC unit.

The *Newmark Plume Operable Unit Remedial Action, Newmark Groundwater Contamination Superfund Site, Final Six-Month Operation Report. Newmark Groundwater Contamination Superfund Site, San Bernardino, California*. August. (URS, 2000a) presents the results of the first six-month period of the PMP, covering from October 1998 through April 1999.

Regarding operations, the SBMWD sampled influent water at the water treatment plants from the time the system began operating. Influent concentrations were at or below MCLs, and effluent concentrations were below MCLs. This indicates that the treatment plants were meeting the objective for VOC removal.

During the first 22 months of operations, from October 1998 through July 2000, all extraction wells were operational. Daily average flow of water treated from the north area extraction wells was approximately 4.61 million gallons per day (MGD), or 3,200 gpm. Daily average flow of water treated from the south area extraction wells was approximately 10.81 MGD, or 7,510 gpm. Flow volume and influent and effluent concentrations were used to estimate the mass of PCE and TCE removed by the treatment plants. A total of approximately 106.6 kilograms (kg) of PCE and 20.6 kg of TCE were removed by the three treatment plants during the 22-month operational period. The presentation of the 22-month operational data can be found in the *Newmark Plume Operable Unit Remedial Action, Newmark Groundwater Contamination Superfund Site, Project Performance Report* (URS, 2004).

5.4 PERFORMANCE DATA ASSESSMENT

This section summarizes the performance of the GAC treatment plants (the Newmark, Waterman, and 17th Street plants). The Newmark Plant has seven pair of GAC vessels, the Waterman plant has eight pair of GAC vessels, and the 17th Street Plant has three pair of 20,000 GAC vessels. Tables 5-2 and 5-3 include information related to the performance of the three treatment plants: flow volume, PCE and TCE concentrations, and cumulative mass removal.

5.4.1 Flow to the Treatment Plants

During the first 22 months of operations (October 1998 through July 2000), all of the extraction wells in the North Field and South Field pumping areas were pumped. Daily average flow of water treated by the GAC vessels and stripping towers is shown in Table 5-2.

TABLE 5-2

Treated Water Flow

Treatment Area	Treated Water Flow (MGD/gpm)
North Field Wells	4.61/3,200
South Field Wells	10.81/7,510

gpm = gallons per minute
MGD = million gallons per day

5.4.2 Influent and Effluent PCE and TCE Concentrations

Since the system commenced operation, the City of San Bernardino has been sampling the influent water at the water treatment plants. The data in the following table are averaged over the operational time in this reporting period (22 months). It is apparent from these data that the influent concentrations are low (at or below MCLs). All effluent concentrations were below the MCLs. Table 5-3 shows the PCE and TCE design concentrations and the observed average influent concentrations.

TABLE 5-3

PCE and TCE Concentrations

Treatment Plant	Contaminants	Design Average Influent Concentrations (µg/L)	Observed Average Influent Concentrations (µg/L)
Newmark	PCE TCE	357	6.4 0.8
Waterman	PCE TCE	357	0.9 0.4
17th Street	PCE TCE	357	3.4 0.86

PCE = tetrachloroethene
TCE = trichloroethene
µg/L = micrograms per liter

5.4.3 VOC Mass Removal

Flow volume and influent and effluent concentrations were used to estimate the mass of PCE and TCE removed by the treatment plants. A total of approximately 106.6 kg of PCE and 20.6 kg of TCE were removed by the three treatment plants during the 22-month operational period.

5.4.4 Performance Summary

In summary, daily average flow to each of the treatment plants was below design capacity. As noted before, only the Newmark Plant received influent water concentrations of PCE higher than the California MCL of 5 µg/L. After treatment, the VOCs were at non-detectable levels in the effluent water. This indicated the treatment plants were meeting the design objective for VOC removal.

Observed average influent concentrations of PCE and TCE were lower when compared to the design concentrations. Design concentrations are typically conservative because they are based on the concentrations observed from all of the monitoring wells, including the highest concentration wells. The VOC influent concentrations in the Waterman and the 17th Street Plants were below the MCLs. This is because the leading edge of the Newmark OU plume probably has not reached the extraction wells. The influent concentrations may increase in the future as the plume reaches the extraction wells.

Within the last operational period, all of the water treatment plants have had their carbon replaced. The following table shows the location, date, and amount of carbon replaced at the water treatment plants. For the Newmark and Waterman Plants this is the first time since start-up that the carbon has been replaced, giving the Newmark plant a 22-month and the Waterman Plant a 22-month carbon change out time. Table 5-4 shows the location, date, and amount of carbon replaced at the three water treatment plants.

TABLE 5-4

Carbon Summary

Location	Date	Amount of Carbon Replaced (pounds)
Newmark Plant	April 2000	140000
Waterman Plant	July 2000	160000
17th Street Plant	November 1998	60000
17th Street Plant	June 1999	60000
17th Street Plant	May 2000	60000

5.5 PERFORMANCE DATA QUALITY

Performance data quality is described in the *Second and Third Quarter 1999 Report for Newmark Groundwater Contamination Superfund Site, Source Operable Unit, Long-Term Monitoring and Sampling Program* (URS, 2000b) and satisfies CEGS 01440 and CEGS 01450. Groundwater sampling is performed under the *Performance Monitoring Program Field Sampling Plan Addendum to the Source OU LTMP Field*

Sampling Plan for Newmark Groundwater Contamination Superfund Site, Newmark OU Remedial Action (URS, 1998).

All samples will be analyzed by the Contract Laboratory Program Analytical Services (CLPAS) and Regional Analytical Program (RAP/Region IX laboratory) and will be considered definitive, given the QC requirements and detection limits of the analytical methods used by these laboratories.

6.0 TREATMENT SYSTEM COST

The total cost of the RA included the cost of the contracts performed by URS, and the cost of the Cooperative Agreement performed by SBMWD. The cost from URS, as described in this report, was approximately $7,702,221, not including EPA administrative and regulatory agency costs. This cost includes construction and the period of performance monitoring, which lasted about two years. The cost from SBMWD was approximately $8,734,943, which included the construction costs incurred by the City, the repair cost and the two years of operation cost during the Operational and Functional Period.

RA activities were performed by URS under two EPA contracts. The first was the Alternative Remedial Contracts Strategy (ARCS) contract covering the beginning of the project through 1998, the second was the Response Action Contracts (RAC) contract covering from 1998 through the present time. RA activities were performed by SBMWD under the Cooperative Agreement V-9994000, which started from 1995 through the present time. Table 6-1 summarizes the final RA costs.

TABLE 6-1

Summary of Remedial Action Costs

Type of Cost	Contractor	Description	Total Value	Total construction cost	1998	1999
1	URSG	Project Management	$393,986			
		Construction Support	$608,455			
		South Plant Contractors	$3,100,377			
		North Plant Contractors	$2,498,345			
		Cleanup Validation	$455,308			
		Treatment Plant Modifications	$104,160			
		Performance Monitoring Program	$513,187			
		Project Completion	$28,403			
Subtotal			$7,702,221	$7,702,221		
2	SBMWD	Property Purchase	$361,728			
		Building Demolition	$28,055			
		Health and Safety	$202,430			
		Historical Review	$529			
		Community Relations	$7,635			
		South and North Plant Extraction Wells	$3,118,244			
		Plant Modifications	$2,702,257			
		South Plant Pipeline (including URSG bridge penetration)	$267,449			
		Construction repair during Operational & Functional Period	$809,206			
		Construction repair during Operational & Functional Period	$809,206			
		Operating cost during Operational & Functional Period	$1,237,410			
Subtotal			$8,734,943	$8,734,943		
Total RA Cost				$16,437,164		

Quantity Treated (October 1998 through July 2000)				Gallons Groundwater	PCE (kg) Removed	TCE (kg) Removed
				9,390,000,000	234	45
Calculated Unit Cost						

kg = kilogram
PCE = tetrachloroethene
SBMWD = San Bernardino Municipal Water Department
TCE = trichloroethene

This page intentionally left blank.

7.0 REGULATORY AND INSTITUTIONAL ISSUES

The following permits were submitted:

- San Bernardino County Environmental Health, for all monitoring and extraction wells.
- The City water department operates the water supply system and GAC units under permit from the California Department of Health Services.

This page intentionally left blank.

8.0 SCHEDULE

The *Interim Remedial Action Report* (URSG, 2004) presents the chronology of each phase of the RA construction activities. This information is reproduced here.

Contractor	Construction Phase	Construction Element	Time Period
URSG	Water Treatment Plants	Newmark North Water Treatment Plant	September 1997 - July 1998
		Newmark South Water Treatment Plant	September 1997 - July 1998
		17th Street Retrofit	August 1998 - October 1998
		GAC Vessels	June 1997 - September 1998
	Pipelines	Freeway Bridge Overcrossing	April 1998 - June 1998
	Monitoring Wells	MW-12 through MW-15	August 1997 - October 1997
		MW-16 through MW-17	October 1997 - November 1997
SBMWD	Pipelines	North Pipeline	March 1998 - October 1998
		South Pipeline	September 1996 - October 1998
	Extraction Wells	EW-6, EW-7, and Newmark-3	September 1996 - May 1997
		EW-1 through EW-5	September 1996 - May 1997

SBMWD = San Bernardino Municipal Water District

This page intentionally left blank.

9.0 OBSERVATIONS AND LESSONS LEARNED

9.1 COST OBSERVATIONS AND LESSONS LEARNED

The O&F period took two years to complete, partly due to the problems found during this period as listed in the letters in Appendix C. All of the solutions to these problems have been implemented into the Muscoy OU construction activities.

9.2 OFF-GAS CORRECTIVE ACTIONS

Shortly after startup and during operation of the treatment plants, the systems started experiencing excessive pressure build-up, which resulted in reduced flow rates and gas releases into the atmosphere through pressure relief valves on the vessels. A study was conducted to determine whether the released air was a health hazard. The data concluded that there was no appreciable risk to the community. The study also was designed to determine a possible solution to the excessive off-gassing. It became apparent that the off-gassing was caused by the formation of large pockets of air within the carbon that prevented the flow of water through the carbon. The air binding problem was resolved by increasing the vessel pressure to keep the air in solution in the water. Automatic pressure-sustaining valves were installed to continuously maintain the proper pressure in the GAC vessels. This resulted in a practical elimination of air discharged from the air release valves. The Air Monitoring Report associated with these activities is provided in the second PMP report, *Newmark Plume Operable Unit Remedial Action, Newmark Groundwater Contamination Superfund Site, Project Performance Report* (URS, 2004).

9.3 OTHER OBSERVATIONS AND LESSONS LEARNED

Several other components of the system electrical system were repaired and replaced during the Operational and Functional Period. A letter issued on September 29, 2000 (see Appendix C) detailed the repair work that was found during the Operational and Functional period, which still needed to be completed beyond the end of the official Operational and Functional period (ending September 29, 2000), with an estimate of funds needed for each type of work. These remaining work do not affect the performance of the system, which has been performed as designed (see the two Project Performance Reports,URS 2000b and URS 2004), and so the Newmark Operable Unit was transferred to SBMWD to start the Long Term Remedial Action (LTRA) period. A second letter issued on April 2, 2002 officially concludes all construction repair activities on site (See Appendix C).

The final cost of the all the repairs amounted to $809,206, as shown in Table 6-1. The period of Performance Monitoring to determine Operational and Functional lasted two years, with the repair work lasted until 2002. All the issues identified in the above two letters were addressed during the Muscoy Design to incorporate all the lessons learned from the Newmark OU construction.

This page intentionally left blank.

10.0 POINTS OF CONTACT

U.S. EPA project manager and telephone number:

Dr. Kim Hoang
Remedial Program Manager
U.S. Environmental Protection Agency
Hazardous Waste Management Division
75 Hawthorne Street (H-6-4)
San Francisco, CA 94105-3901

URS Site Manager:

Dwayne Deutscher, PE
URS Group, Inc.
2870 Gateway Oaks Drive, Suite 300
Sacramento, California 95833

SBMWD Project Manager

William Bryden
City of San Bernardino Municipal Water Department
300 North “D” Street
San Bernardino, CA 92418

DTSC Project Manager:

Dr. Yasser Aref
DTSC
5796 Corporate Ave.
Cypress, CA 90630

This page intentionally left blank.

11.0 REFERENCES

American Society for Testing and Materials (ASTM) International. ASTM D2488-00, Standard Practice for Description and Identification of Soils (Visual-Manual Procedure). ASTM International. Accessed at: www.astm.org.

Dutcher, L., and A. Garrett, 1963. *Geologic and Hydrologic Features of the San Bernardino Area, California*. U.S. Geologic Survey Water Supply Paper 1419.

Fife, D., D. Rodgers, G. Chase, R. Chapman, and E. Sprotte, 1976. *Geologic Hazards in Southwestern San Bernardino County, California, Special Report 113*. California Division of Mines and Geology, p. 40.

Hardt, W., and C. Hutchinson, 1980. *Development and Use of a Mathematical Model of the San Bernardino Valley Ground-Water Basin, California*. U.S. Geological Survey Open-File Report 80-576, 80 p.

United States Environmental Protection Agency (EPA), Region 9, 1993. *Newmark Operable Unit Record of Decision, Newmark Groundwater Contamination Superfund Site*. August.

U.S. EPA, 1998. *Guide to Documenting and Managing Cost and Performance Information for Remediation Projects*. EPA 542-B-98-007. October.

URS Group, Inc., 1993. *Remedial Investigation/Feasibility Study for Newmark RI/FS Groundwater Contamination Project*. March.

URS Group, Inc., 1998. *Performance Monitoring Program Field Sampling Plan Addendum to the Source OU LTMP Field Sampling Plan for Newmark Groundwater Contamination Superfund Site, Newmark OU Remedial Action*. Prepared for U.S. EPA, Region IX.

URS Group, Inc., 2000a. *Newmark Plume Operable Unit Remedial Action, Newmark Groundwater Contamination Superfund Site, Final Six-Month Operation Report. Newmark Groundwater Contamination Superfund Site, San Bernardino, California*. August.

URS Group, Inc., 2000b. *Draft Second and Third Quarter Report 1999 Report for Newmark Groundwater Contamination Superfund Site, Source Operable Unit, Long-Term Monitoring and Sampling Program*. August.

URS Group, Inc., 2004. *Newmark Plume Operable Unit Remedial Action, Newmark Groundwater Contamination Superfund Site, Project Performance Report*. January.

Youngs, L., S. Bezore, R. Chapman, and G. Chase, 1981. *Resource Investigation of Low and Moderate-Temperature Geothermal Areas in San San Bernardino, California*. Department of Conservation, Division of Mines and Geology. August.

This page intentionally left blank

APPENDIX A

Parts List

Electrical Parts List

Item Number	Part Name	Manufacturer	Model Number	Description	Cut Sheet Location
1	Getting Started with DTAM PLUS	Allen-Bradley	NA	Users manual	Clearwater Environmental, INC. Operations and Maintenance Instructions: Book 2, Section 5, Appendix A-Electrical Manuals
2	DTMA PLUS Operator Interface Module	Allen-Bradley	NA	PLC hardware	Clearwater Environmental, INC. Operations and Maintenance Instructions: Book 2, Section 5, Appendix A-Electrical Manuals
3	SLC 500 Analog 1/0 Modules	Allen-Bradley	Catalogue No. 174-NI4, -NI041, -NI04V, -N041, and -N04V	PLC hardware	Clearwater Environmental, INC. Operations and Maintenance Instructions: Book 2, Section 5, Appendix A-Electrical Manuals
4	SLC 500 Programmable Controller RS-232 to RS-485 Interface Controller Catalog # 1747-PLC	Allen-Bradley	Catalogue No. 1747-PLC	PLC hardware	Clearwater Environmental, INC. Operations and Maintenance Instructions: Book 2, Section 5, Appendix A-Electrical Manuals
5	SLC 5/01 and SLC 5/02 Modular Processor	Allen-Bradley	NA	PLC hardware	Clearwater Environmental, INC. Operations and Maintenance Instructions: Book 2, Section 5, Appendix A-Electrical Manuals
6	SLC 500 Power Supplies	Allen-Bradley	NA	PLC hardware	Clearwater Environmental, INC. Operations and Maintenance Instructions: Book 2, Section 5, Appendix A-Electrical Manuals
7	discrete Module I/0	Allen-Bradley	NA	PLC hardware	Clearwater Environmental, INC. Operations and Maintenance Instructions: Book 2, Section 5, Appendix A-Electrical Manuals
8	SLC 500 Module Chassis	Allen-Bradley	NA	PLC hardware	Clearwater Environmental, INC. Operations and Maintenance Instructions: Book 2, Section 5, Appendix A-Electrical Manuals

Electrical Parts List (Cont'd)

Item Number	Part Name	Manufacturer	Model Number	Description	Cut Sheet Location
9	Operations and Maintenance Controls	Excel Automation and Electric	NA	PLC software	Clearwater Environmental, INC. Operations and Maintenance Instructions: Book 2, Section 5, Appendix A-Electrical Manuals
10	Solid State Annunciator Systems	Ronan	Series X12 and X16	PLC hardware	Clearwater Environmental, INC. Operations and Maintenance Instructions: Book 2, Section 5, Appendix A-Electrical Manuals
11	Digital Indicator-Totalizer Transmitter	Water Specialties	Model Tr-28-1/Tr 28-1-T	Water meter hardware	Clearwater Environmental, INC. Operations and Maintenance Instructions: Book 2, Section 5, Appendix A-Electrical Manuals
12	3"-20" Electronic Mainline Meter	Water Specialties	NA	Water meter body	Clearwater Environmental, INC. Operations and Maintenance Instructions: Book 2, Section 5, Appendix A-Electrical Manuals
13	Electric Activator/ Positioner	Wallace & Tiernan	BK# IM40.300AA UA lss. A	Electric activator/ positioner	Clearwater Environmental, INC. Operations and Maintenance Instructions: Book 2, Section 5, Appendix A-Electrical Manuals
14	Signal Conditioning Unit	Wallace & Tiernan	BK# IM40.100AA UA lss. A	Signal conditioning unit	Clearwater Environmental, INC. Operations and Maintenance Instructions: Book 2, Section 5, Appendix A-Electrical Manuals
15	Ultra Slimpak DC Input Field Configurable Isolator	Action Instruments	Model G408-001/ 1001	PLC hardware	Clearwater Environmental, INC. Operations and Maintenance Instructions: Book 2, Section 5, Appendix A-Electrical Manuals

Carbon Vessels Parts List

Item Number	Part Name	Size	Manufacturer	Model Number	Description	Cut Sheet Location
1	Pressure Gauge	0.25" X 2.5"	Palmer Instruments	25CBD (0-100)	2.5" dial fluid filled pressure gauge 0-30 psi	Clearwater Environmental, INC. Operations and Maintenance Instructions: Book 2, Section 5, Appendix B-Mechanical Manuals
2	Ball Valve	0.5", 0.75", 1", 2"	Apallo	NA	Brass, chrome ball valve	Clearwater Environmental, INC. Operations and Maintenance Instructions: Book 2, Section 5, Appendix B-Mechanical Manuals
3	Cam And Grooves	2",4"	Dixon Valve and Coupling Co.	200F-AL, 200DC-AL, 400-AL, 400-DC-AL	Cam-lock and groove adapters, aluminum	Clearwater Environmental, INC. Operations and Maintenance Instructions: Book 2, Section 5, Appendix B-Mechanical Manuals
4	Industrial Spray Products	2"	Spraying Systems Co.	2HHSJ-PVC-1701400	Water sprayer in carbon vessels	Clearwater Environmental, INC. Operations and Maintenance Instructions: Book 2, Section 5, Appendix B-Mechanical Manuals
5	Ball Valve	4"	Fluid Controls	NA	316 SS full port ball valve	Clearwater Environmental, INC. Operations and Maintenance Instructions: Book 2, Section 5, Appendix B-Mechanical Manuals
6	Combination Air Valves	1"	APCO	143-C	Pressure air/vac vent	Clearwater Environmental, INC. Operations and Maintenance Instructions: Book 2, Section 5, Appendix B-Mechanical Manuals
7	Rupture Disks	4"	ZOOK	NA	ZOOK mono graphite 75# burst disk	Clearwater Environmental, INC. Operations and Maintenance Instructions: Book 2, Section 5, Appendix B-Mechanical Manuals
8	Series BG Resilient Seat Butterfly Valve	8"	Watts Regulator	GA4-M4	Series BG resilient seat butterfly valve	Clearwater Environmental, INC. Operations and Maintenance Instructions: Book 2, Section 5, Appendix B-Mechanical Manuals
9	Flanged Tube Water Meter	8"	Water Specialties	Model ML-04-D	Water meter	Clearwater Environmental, INC. Operations and Maintenance Instructions: Book 2, Section 5, Appendix B-Mechanical Manuals
10	Water Meter Indicator, Totalizer, and Transmitter	To fit 8" meter	Water Specialties	Model TR-28	Water meter hardware	Clearwater Environmental, INC. Operations and Maintenance Instructions: Book 2, Section 5, Appendix B-Mechanical Manuals

Carbon Vessels Parts List (Cont'd)

Item Number	Part Name	Size	Manufacturer	Model Number	Description	Cut Sheet Location
11	Meter Power Supply	for 8" meter	Water Specialties	Model IN-36-I	Water meter hardware	Clearwater Environmental, INC. Operations and Maintenance Instructions: Book 2, Section 5, Appendix B-Mechanical Manuals
12	VIOK Chlorinator	NA	Wallace and Tiernan	BK # INI25.100A lss. A	Water chlorinator	Clearwater Environmental, INC. Operations and Maintenance Instructions: Book 2, Section 5, Appendix B-Mechanical Manuals
13	Differential Pressure Transducer	NA	Davis Industries	DT55201 (has been changed)	Differential pressure transducer 4-20 mA, 0-30 psi	Clearwater Environmental, INC. Operations and Maintenance Instructions: Book 2, Section 5, Appendix B-Mechanical Manuals

Yard Piping Parts List

Item Number	Part Name	Size	Manufacturer	Model Number	Description	Cut Sheet Location
1	Ductile Iron Pipe	20"	Pacific States Cast Iron Pipe Company	NA	20" cement lined, class 50 plan MJ/TJ x plain end ductile iron pipe	Clearwater Environmental, INC. Operations and Maintenance Instructions: Book 1, Section 3-Project Data
2	Ductile Iron Pipe	24"	Pacific States Cast Iron Pipe Company	NA	24" cement lined, class 50 plan MJ/TJ x plain end ductile iron pipe	Clearwater Environmental, INC. Operations and Maintenance Instructions: Book 1, Section 3-Project Data
3	Flow Meters	8"	Water Specialties	Model ML-04	8" propeller flow meter	Clearwater Environmental, INC. Operations and Maintenance Instructions: Book 1, Section 3-Project Data
4	Flow Meters	24"	Water Specialties	Model ML-04	24" propeller flow meter	Clearwater Environmental, INC. Operations and Maintenance Instructions: Book 1, Section 3-Project Data
5	Flanged Fittings	20" and 24"	Tyler/Union	NA	Ductile Iron C110 flanged fittings, 90, 45, 22.5, 11.25	Clearwater Environmental, INC. Operations and Maintenance Instructions: Book 1, Section 3-Project Data
6	Flanged Fittings	20" and 24"	Tyler/Union	NA	Ductile iron C110 flanged fittings tees, reducing tees, crosses, and reducers	Clearwater Environmental, INC. Operations and Maintenance Instructions: Book 1, Section 3-Project Data
7	Restrained Joints	20" and 24"	EBAA IRON SALES, INC.	NA	Megalug restrained joints (mechanical joint)	Clearwater Environmental, INC. Operations and Maintenance Instructions: Book 1, Section 3-Project Data
8	Butterfly Valves	24"	Pratt	NA	Groundhog and Triton HP-250 butterfly valves 24" for buried use.	Clearwater Environmental, INC. Operations and Maintenance Instructions: Book 1, Section 3-Project Data
9	Plug Valve		Pratt	NA	Eccentric plug valve	Clearwater Environmental, INC. Operations and Maintenance Instructions: Book 1, Section 3-Project Data
11	Check Valve		American Flow Control	NA	Swing check valves	Clearwater Environmental, INC. Operations and Maintenance Instructions: Book 1, Section 3-Project Data

Yard Piping Parts List (Cont'd)

Item Number	Part Name	Size	Manufacturer	Model Number	Description	Cut Sheet Location
12	Service Saddle		Ford	NA	Service saddles	Clearwater Environmental, INC. Operations and Maintenance Instructions: Book 1, Section 3-Project Data
13	Service Saddle		Ford	NA	Service saddles and tapping sleeves	Clearwater Environmental, INC. Operations and Maintenance Instructions: Book 1, Section 3-Project Data
14	Corporation Stop		Ford	NA	Corporation stops and ballcorps	Clearwater Environmental, INC. Operations and Maintenance Instructions: Book 1, Section 3-Project Data
15	Air Release Valve		APCO	NA	Combination air valve siers 140C	Clearwater Environmental, INC. Operations and Maintenance Instructions: Book 1, Section 3-Project Data
16	Plug Valve		Keystone Valve USA, INC.	NA	Plug valve, ballcentric plug valve	Clearwater Environmental, INC. Operations and Maintenance Instructions: Book 1, Section 3-Project Data
17	Ductile Iron Flanges	8" and 20"	Pipe Works	NA	125# ductile iron flange	Clearwater Environmental, INC. Operations and Maintenance Instructions: Book 1, Section 3-Project Data
18	Grey Iron Flanges		Pipe Works	NA	125# grey iron flange	Clearwater Environmental, INC. Operations and Maintenance Instructions: Book 1, Section 3-Project Data

APPENDIX B

System Drawings

CHEMICAL DIAGRAMS

WATERMAN	2-2A
NORTH PLANT	2-2B
GAC	2-4
17TH STREET PLANT	2-1

MECHANICAL DIAGRAMS

17TH STREET PLANT	2-1
WATERMAN	2-3AB
NORTH PLANT	2-3B
PSV DETAIL	2-5
WELL DIAGRAMS	4-3

ELECTRICAL DIAGRAMS

WATERMAN	2-6
NORTH PLANT	2-7
PANEL	2-8
PLC DIAGRAM	2-9

HYDRAULIC DIAGRAMS

WATERMAN	A-1
NORTH PLANT	A-2
17TH STREET PLANT	A-3

PIPELINE DIAGRAMS

SOUTH PLANT PIPELINE	3-1
SOUTH PLANT PIPELINE	3-2
SOUTH PLANT PIPELINE	3-3
SOUTH PLANT PIPELINE	3-4
SOUTH PLANT PIPELINE	3-5
NORTH PLANT PIPELINE	3-6

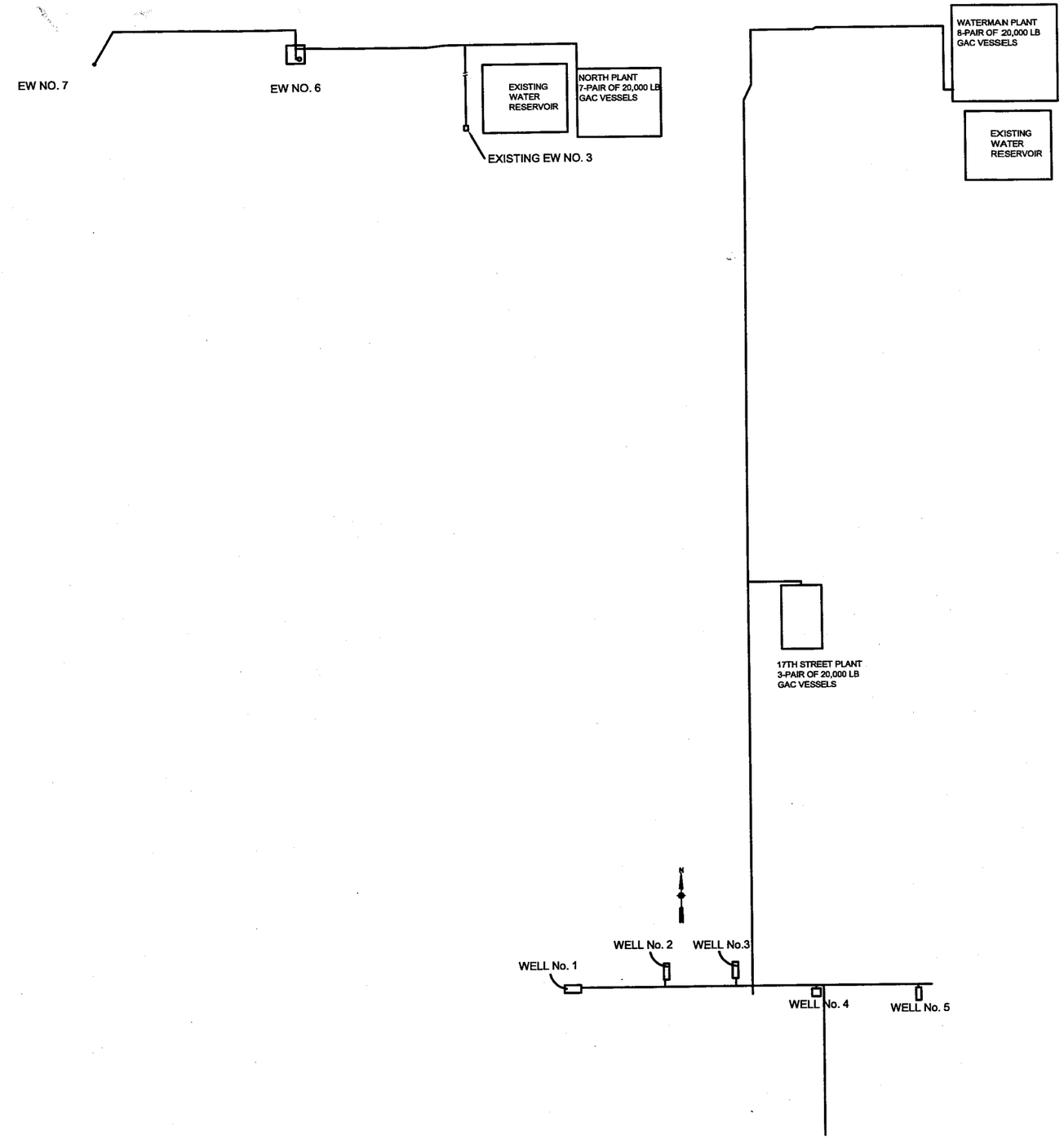

NO	DATE	DESCRIPTION	NO	DATE	DESCRIPTION

REVISIONS

DESIGNED BY: STL
DRAWN BY: JW
CHECKED BY: DHD

URS
2870 Gateway Oaks Drive, Suite 300
Sacramento, California 95833

NEWMARK OU REMEDIAL DESIGN
NEWMARK GROUNDWATER
CONTAMINATION SUPERFUND SITE

NEWMARK RA
SITE PLAN

Scale: NO SCALE | Date: 9/25/97 | Dwg. No.: FIGURE 1-2

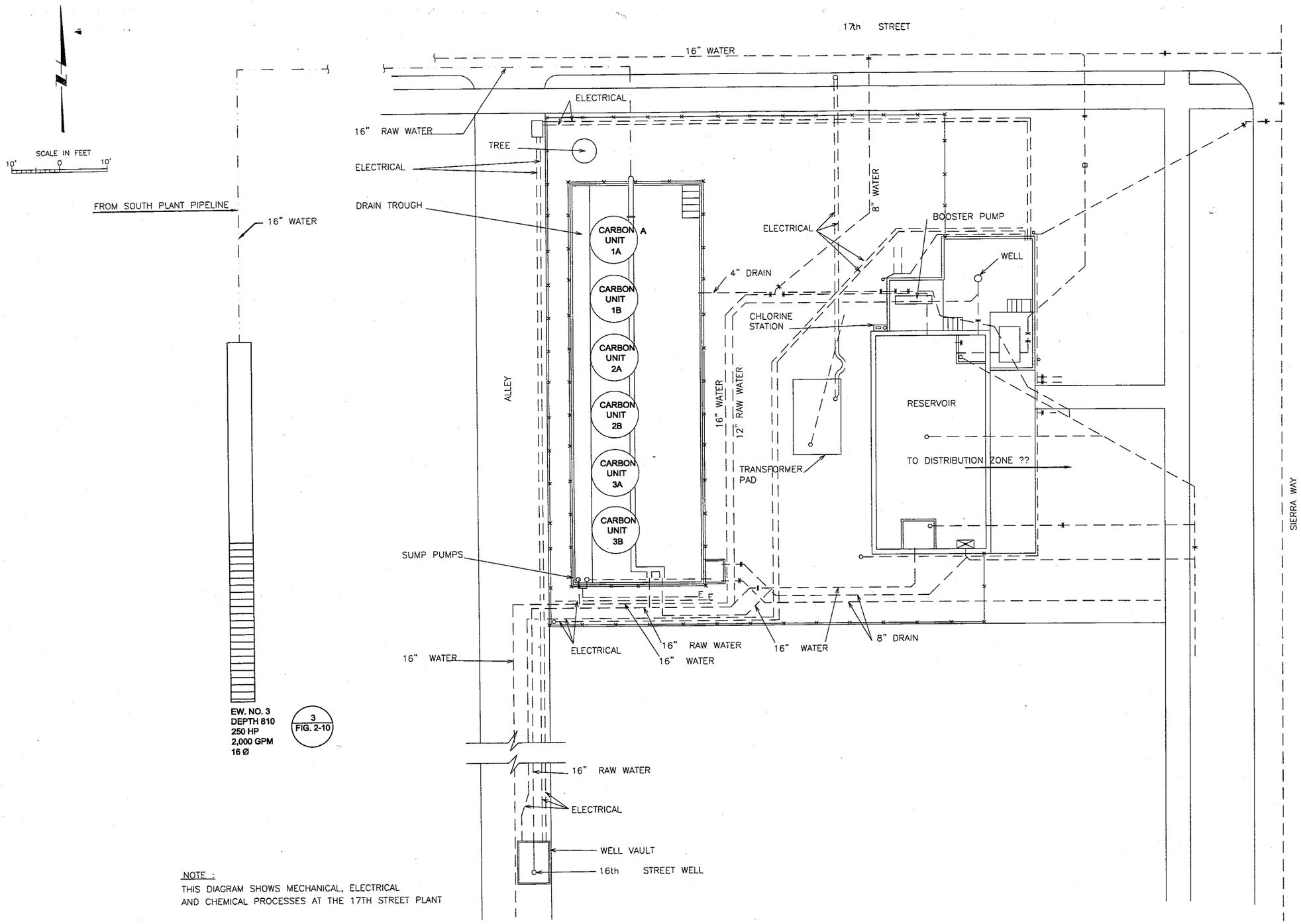

NOTE :
THIS DIAGRAM SHOWS MECHANICAL, ELECTRICAL AND CHEMICAL PROCESSES AT THE 17TH STREET PLANT

NO.	DATE	DESCRIPTION	NO.	DATE	DESCRIPTION

REVISIONS

DESIGNED BY: PS
DRAWN BY: ETB
CHECKED BY: CHECK

URS
2520 Venture Oaks Way, Suite 350
Sacramento, California 95833-3200
TEL: (916) 929-2048 FAX: (916) 929-7283

NEWMARK OU REMEDIAL DESIGN
NEWMARK GROUNDWATER
CONTAMINATION SUPERFUND SITE

17th STREET PLANT
FLOW DIAGRAM AND SITE LAYOUT

SCALE:	DATE:	DWG. FILE:	SHEET NO.
NONE	7/26/01	010726FIG2-4.DWG	Figure 2-1

NEWMARK/200107BB Oct 15, 2001 010726fig2-4.dwg

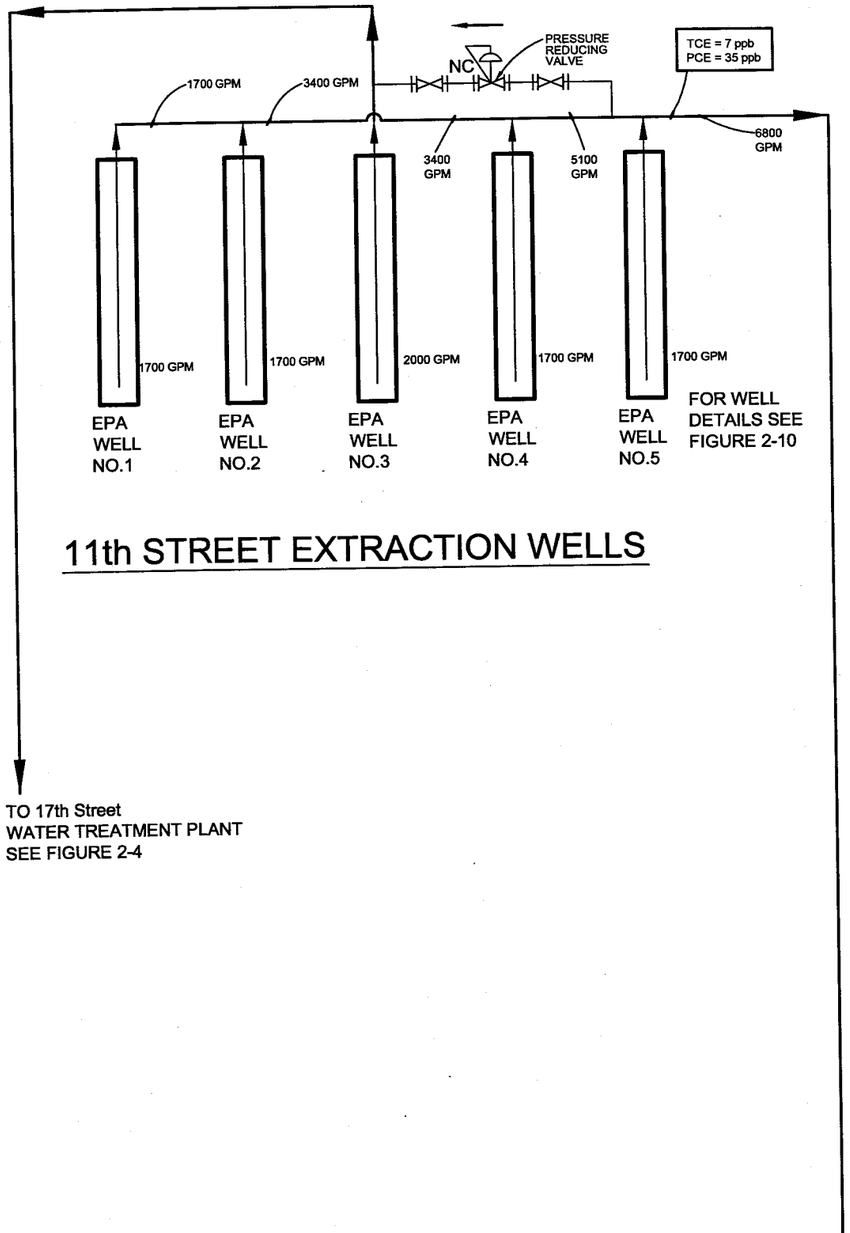

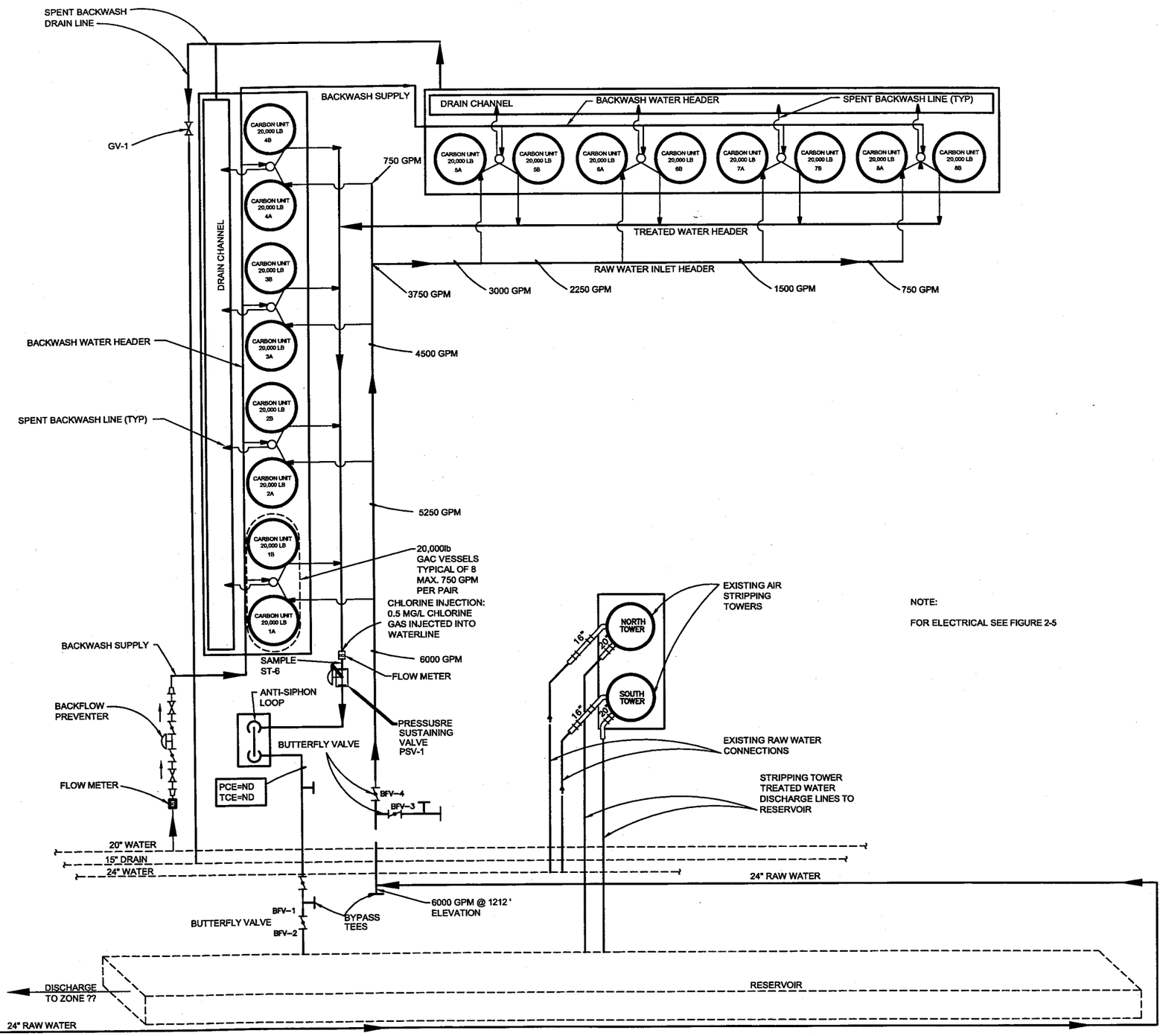

NOTE:

FOR ELECTRICAL SEE FIGURE 2-5

NO.	DATE	DESCRIPTION	NO.	DATE	DESCRIPTION

REVISIONS

DESIGNED BY:
DRAWN BY:
CHECKED BY:

URS
2520 Venture Oaks Way, Suite 250
Sacramento, California 95833-3203
TEL: (916) 929-2346 FAX: (916) 929-7283

NEWMARK OU REMEDIAL DESIGN
NEWMARK GROUNDWATER
CONTAMINATION SUPERFUND SITE

WATERMAN PLANT
CHEMICAL FLOW DIAGRAM

SCALE:	DATE:	DWG. FILE:	SHEET NO.
SCALE		Figure 2-1.dwg	Figure 2-2A

NEWMARK 20010726 Oct 17, 2001 010726R02-1.dwg

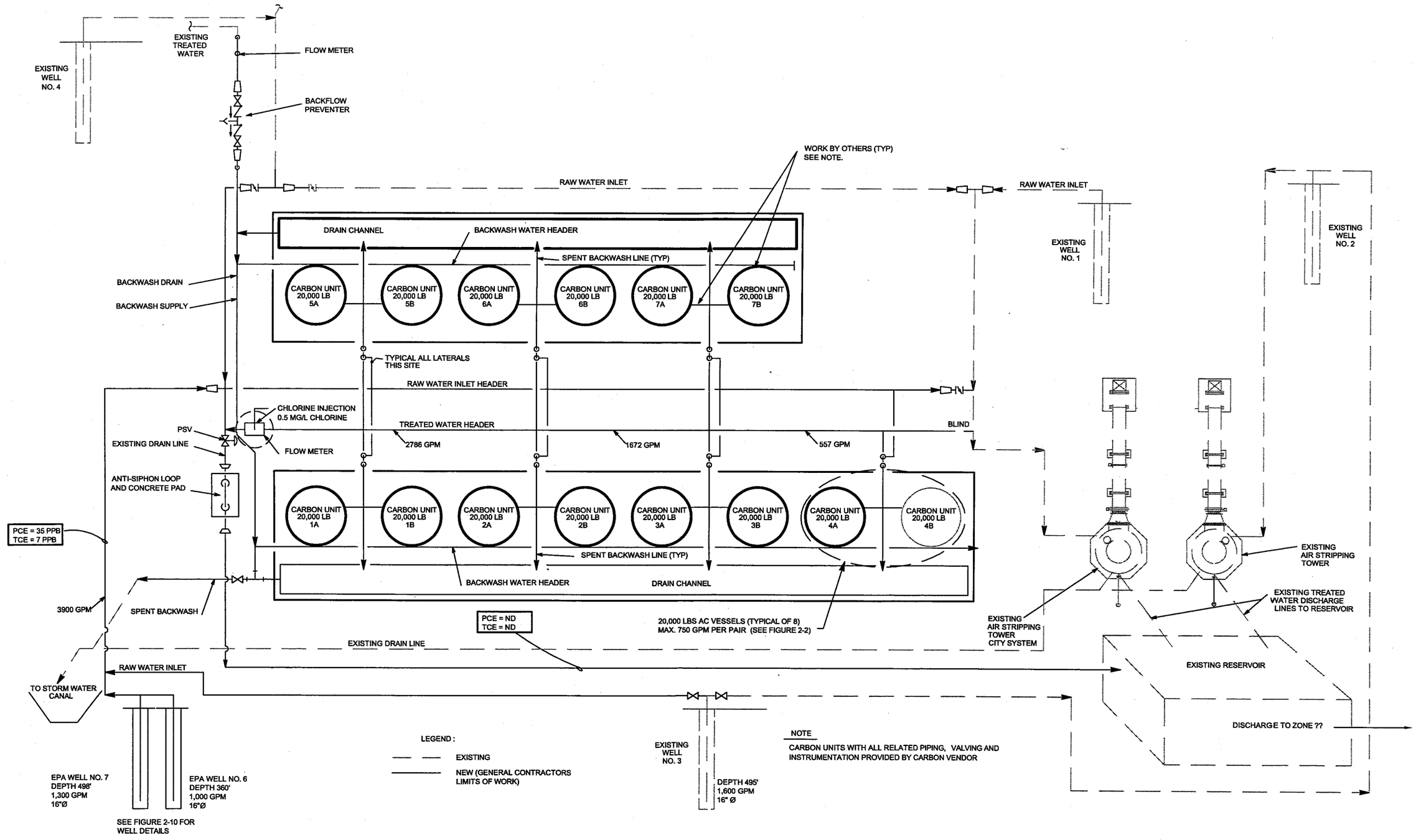

NO.	DATE	DESCRIPTION	NO.	DATE	DESCRIPTION

REVISIONS

DESIGNED BY:
DRAWN BY: ETB
CHECKED BY: CHECK

URS
2520 Venture Oaks Way, Suite 200
Sacramento, California 95833-3200
TEL: (916) 929-2346 FAX: (916) 929-7283

NEWMARK OU REMEDIAL DESIGN
NEWMARK GROUNDWATER
CONTAMINATION SUPERFUND ISTE

WATERMAN PLANT
CHEMICAL FLOW DIAGRAM

SCALED	DATED	DWG. FILE	SHEET NO.
SCALE	7\26\00	20010726\010726FIG2-1.DWG	FIGURE 2-2B

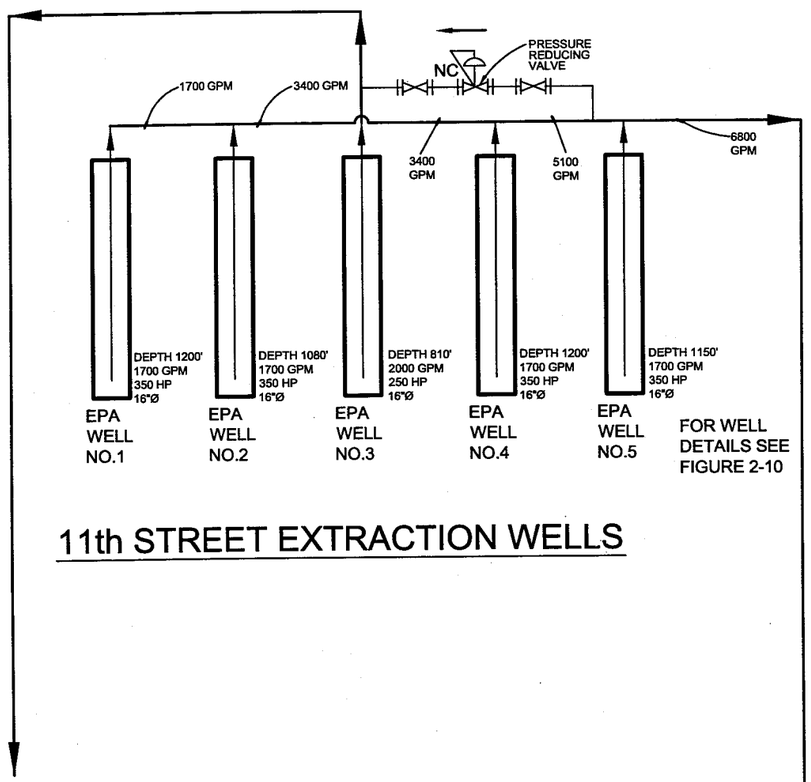

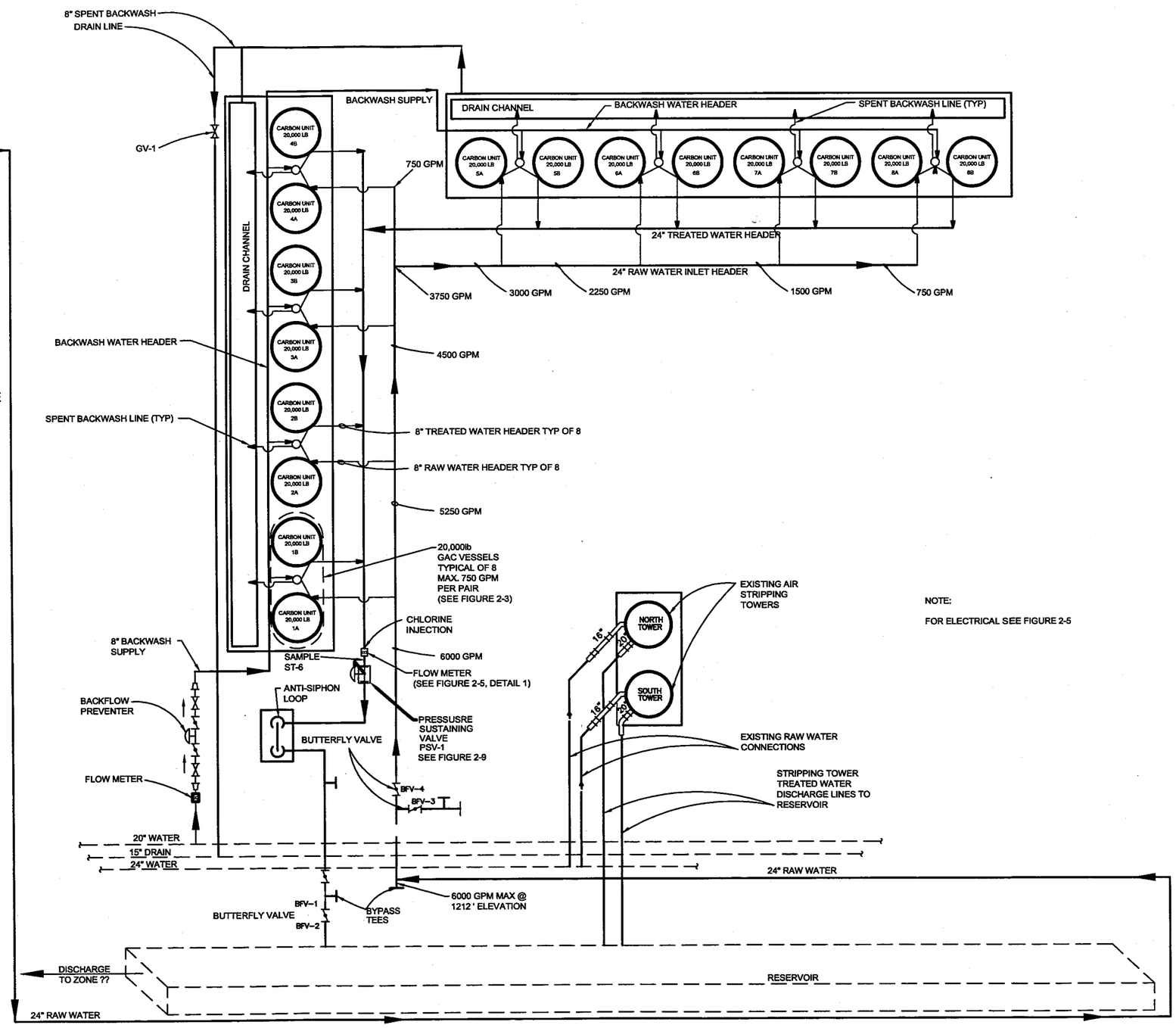

NOTE:

FOR ELECTRICAL SEE FIGURE 2-5

NO.	DATE	DESCRIPTION	NO.	DATE	DESCRIPTION

REVISIONS

DESIGNED BY: ____
DRAWN BY: ETB
CHECKED BY: CHECK

URS
2520 Venture Oaks Way, Suite 250
Sacramento, California 95833-3200
TEL: (916) 929-2346 FAX: (916) 929-7283

NEWMARK OU REMEDIAL DESIGN
NEWMARK GROUNDWATER
CONTAMINATION SUPERFUND ISTE

WATERMAN PLANT
MECHANICAL FLOW DIAGRAM

SCALE:	DATE:	DWG. FILE:	SHEET NO.
SCALE	7/26/00	20010726\010726FIG2-1.DWG	FIGURE 2-3A

T:\PROJECTS\NEWMARK\FIG-1.DWG (ETB)

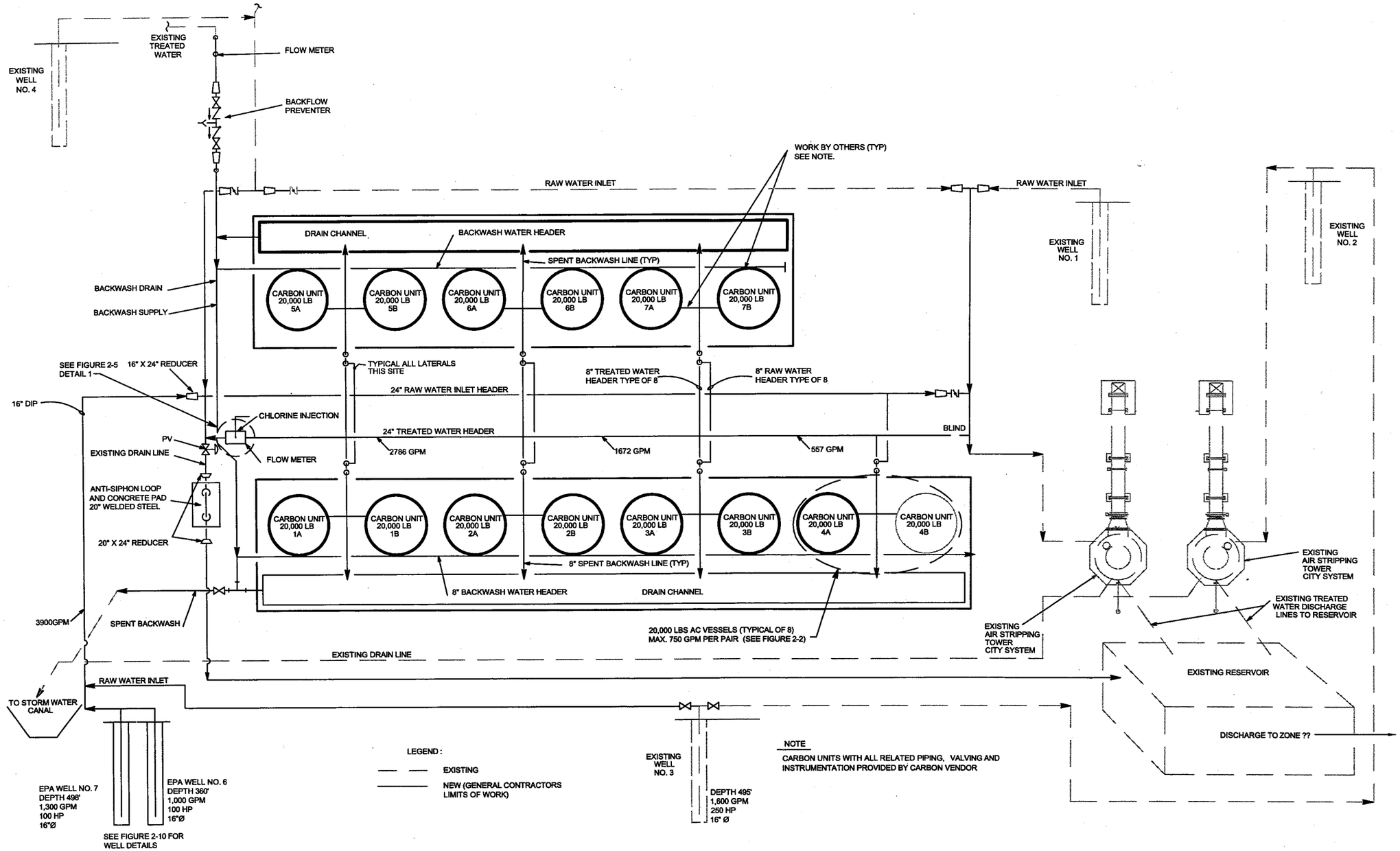

NO.	DATE	DESCRIPTION	NO.	DATE	DESCRIPTION

REVISIONS

DESIGNED BY:
DRAWN BY: ETB
CHECKED BY: CHECK

URS
2520 Venture Oaks Way, Suite 350
Sacramento, California 95833-3200
TEL: (916) 929-2346 FAX: (916) 929-7283

NEWMARK OU REMEDIAL DESIGN
NEWMARK GROUNDWATER
CONTAMINATION SUPERFUND ISTE

WATERMAN PLANT
MECHANICAL FLOW DIAGRAM

SCALE	DATE	DWG. FILE	SHEET NO.
SCALE	7\26\00	20010726\010726FIG2-1.DWG	FIGURE 2-3B

NOTE:

1. THIS FIGURE DEPICTS PROCESS FLOW THROUGH ONE PAIR OF VESSELS. PLANT PROCESS FLOW IS DEPICTED IN FIGURE 2-1.
2. VALVE DESIGNATIONS AND PIPING ARE SHOWN FOR ONE PAIR OF VESSELS ONLY (VESSEL PAIR A). VESSELS PAIRS B THROUGH H ARE DESIGNATED SIMILARLY.
3. VESSELS ARE OPERATED IN SERIES

DESIGN CRITERIA
-750 GPM PER VESSEL PAIR
-20,000 LB CARBON PER VESSEL
-7 PPB TCE
-35 PPB PCE

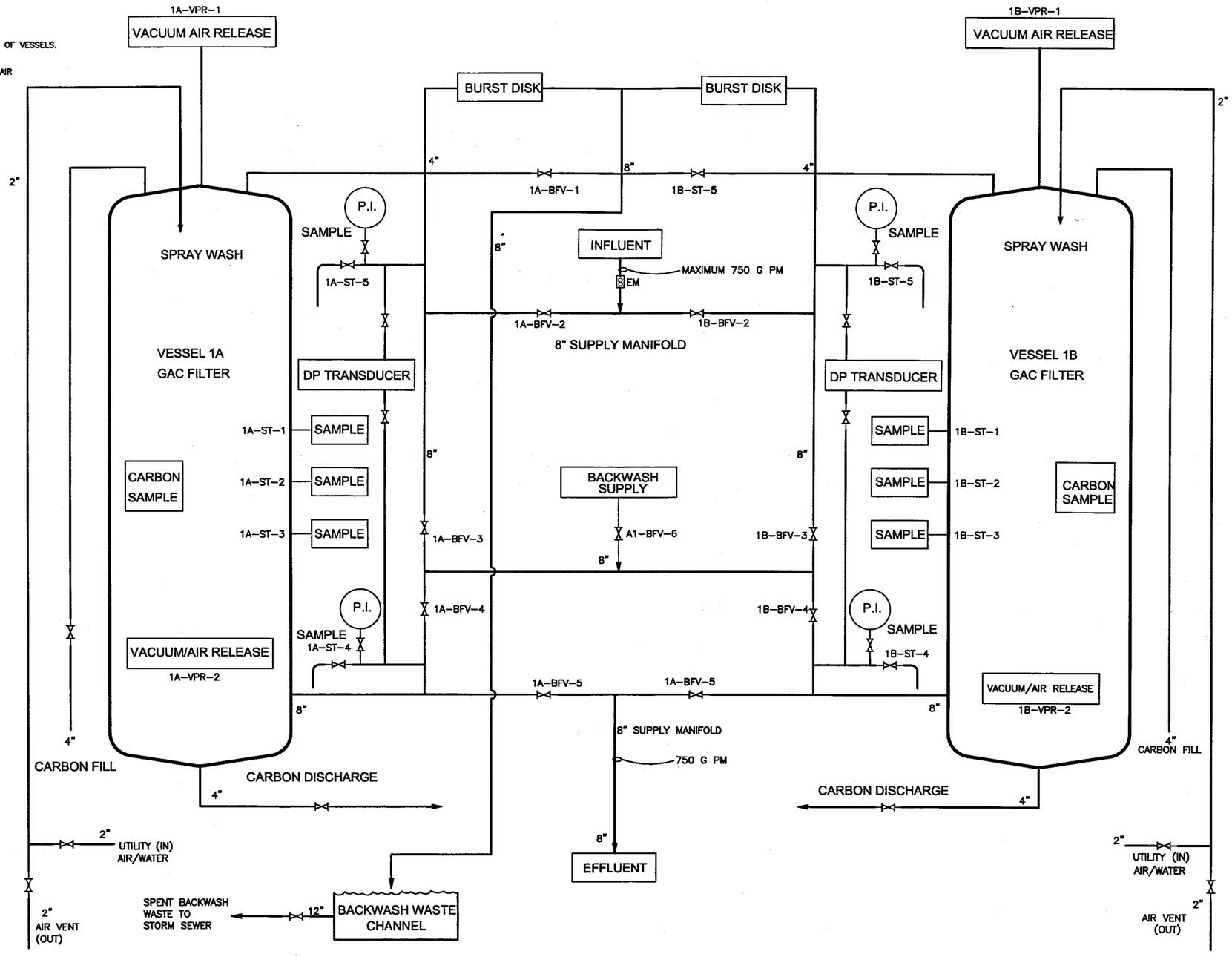

LEGEND

PI	PRESSURE INDICATOR
SAMPLE	SAMPLE TAPS
	VALVES (ALL TYPES)
DP TRANSDUCER	DIFFERENTIAL PRESSURE TRANSDUCER

VESSEL 1A FLOW DIAGRAM VESSEL 1B

NO.	DATE	DESCRIPTION	NO.	DATE	DESCRIPTION

REVISIONS

DESIGNED BY: PS
DRAWN BY: ETB
CHECKED BY: CHECK

URS
2520 Venture Oaks Way, Suite 250
Sacramento, California 95833-3200
TEL: (916) 929-2345 FAX: (916) 929-7283

NEWMARK OU REMEDIAL DESIGN
NEWMARK GROUNDWATER
CONTAMINATION SUPERFUND SITE

FLOW DIAGRAM FOR GAC ADSORBER SYSTEMS

SCALE:	DATE:	DWG. FILE:	SHEET NO.
NOT TO SCALE	10/12/00	GAC FLOW DIAG.	Figure 2-4

NEWMARK/20010726 ETB Oct 15, 2001 010726R22-2.dwg

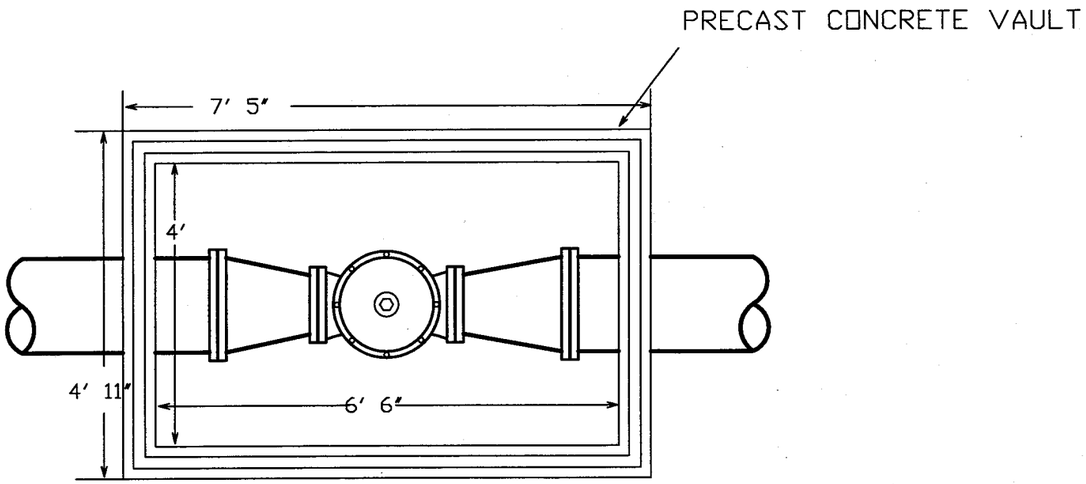

PLAN

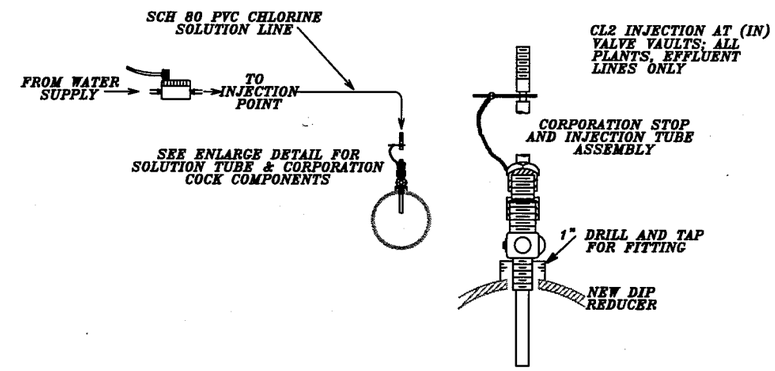

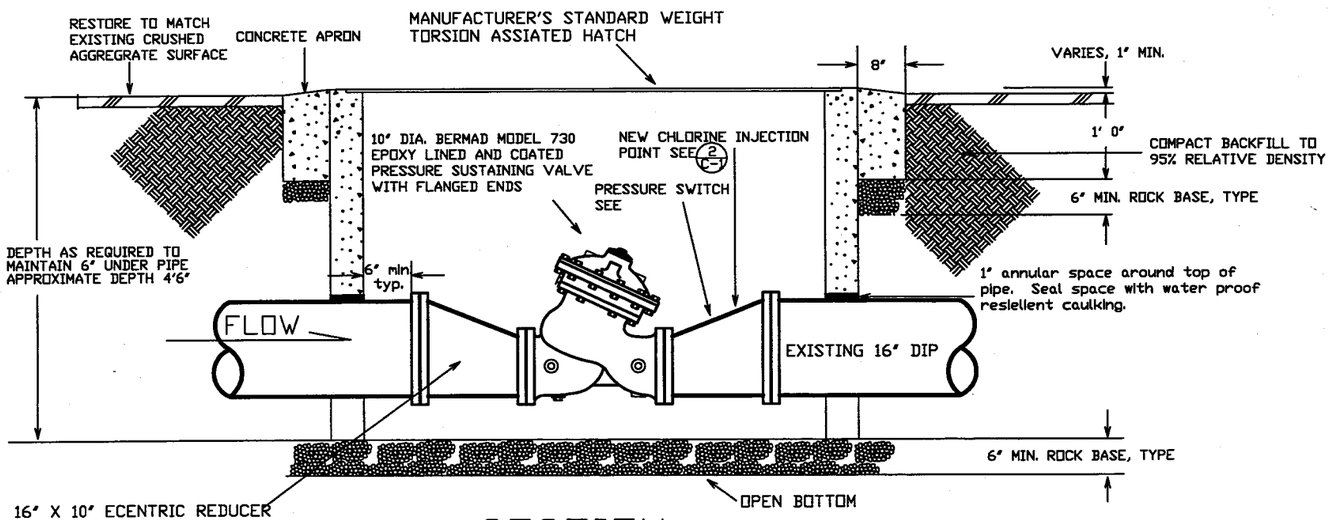

SECTION

NO.	DATE	DESCRIPTION	NO.	DATE	DESCRIPTION

REVISIONS

DESIGNED BY: PS
DRAWN BY: ETB
CHECKED BY: CHECK

URS
2520 Venture Oaks Way, Suite 250
Sacramento, California 95833-3200
TEL: (916) 929-2346 FAX: (916) 929-7283

NEWMARK OU REMEDIAL DESIGN
NEWMARK GROUNDWATER
CONTAMINATION SUPERFUND SITE

NEWMARK RA
PRESSURE SUSTAINING VALVE

SCALE	DATE	DWG FILE	SHEET NO.
SCALE	7/26/01	010726FIG2-9.DWG	Figure 2-5

NEWMARK/20010726 ETB Oct 15, 2001 010926fig2-9.dwg

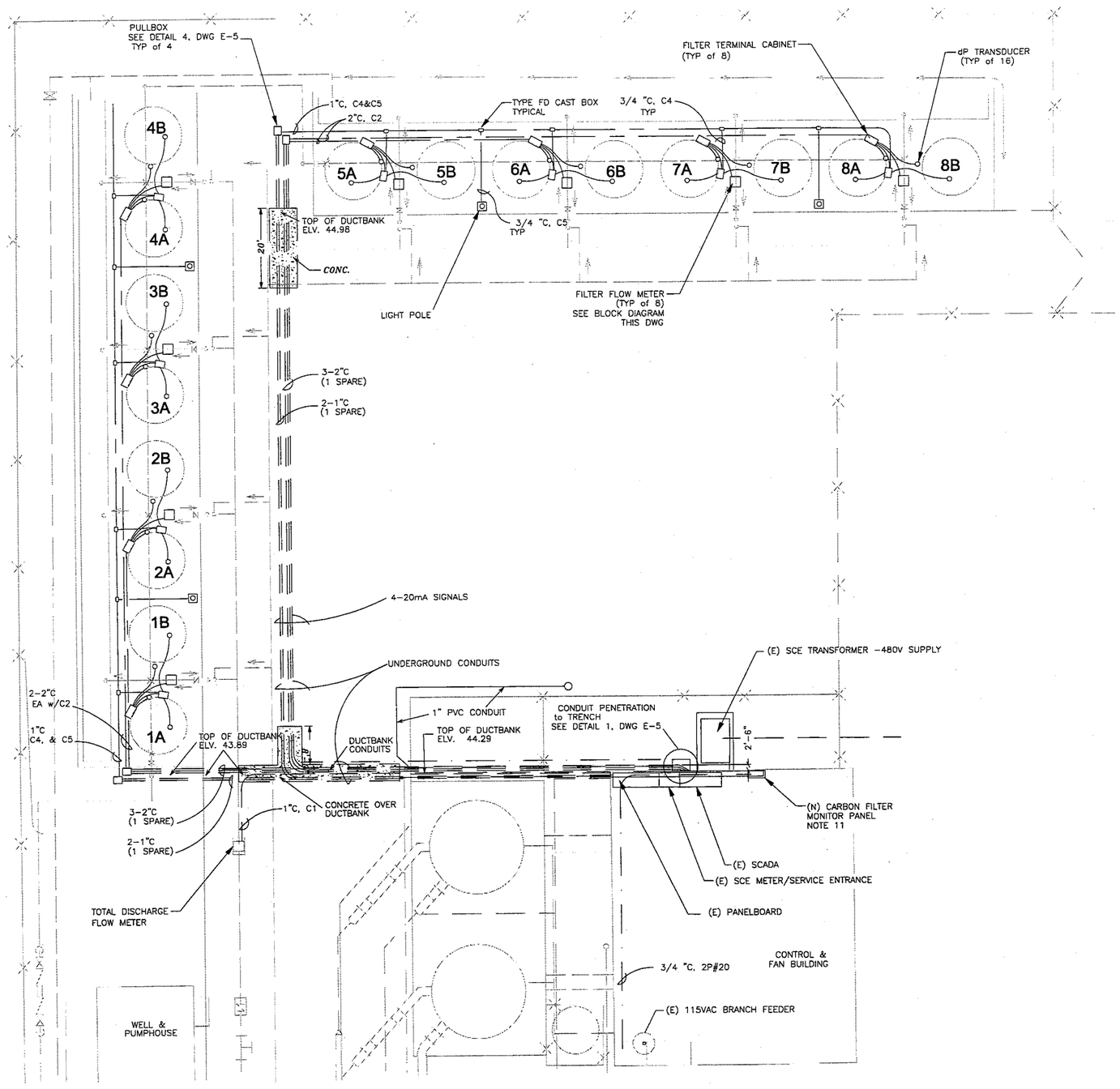

DESIGNATIONS:

C1	4-2P#20, IS/OS
C2	8-2P#20, IS/OS
C3	NOT USED
C4	2#12 & #12G, THWN
C5	2#10 & #10G, THWN

2P#20 = TWO PAIR, #20AWG, STRANDED, COPPER, 300V
SURFACE ROUTED CONDUIT
IS/OS = INDIVIDUALLY SHIELDED with OVERALL SHIELD
(E) EXISTING
(N) NEW

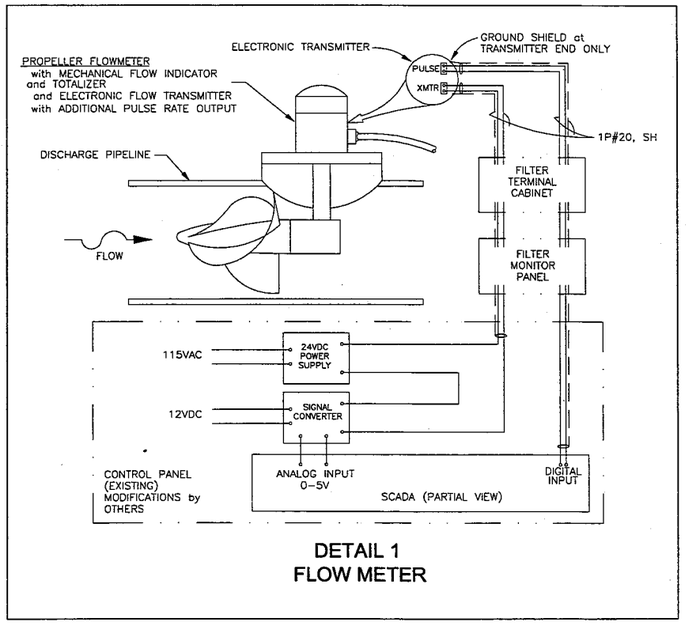

DETAIL 1
FLOW METER

NO.	DATE	DESCRIPTION	NO.	DATE	DESCRIPTION

REVISIONS

DESIGNED BY: PS
DRAWN BY: ETB
CHECKED BY: CHECK

URS
2520 Venture Oaks Way, Suite 250
Sacramento, California 95833-3200
TEL: (916) 929-2345 FAX: (916) 929-7293

NEWMARK OU REMEDIAL DESIGN
NEWMARK GROUNDWATER
CONTAMINATION SUPERFUND SITE

CARBON FILTER / WATERMAN PLANT
ELECTRICAL SITE PLAN

SCALE:	DATE:	DWG. FILE:	SHEET NO.
SCALE	7/26/01	010726FIG2-5.DWG	Figure 2-6

NEWMARK/20010726 ETB Oct 15, 2001 010726fig2-5.dwg

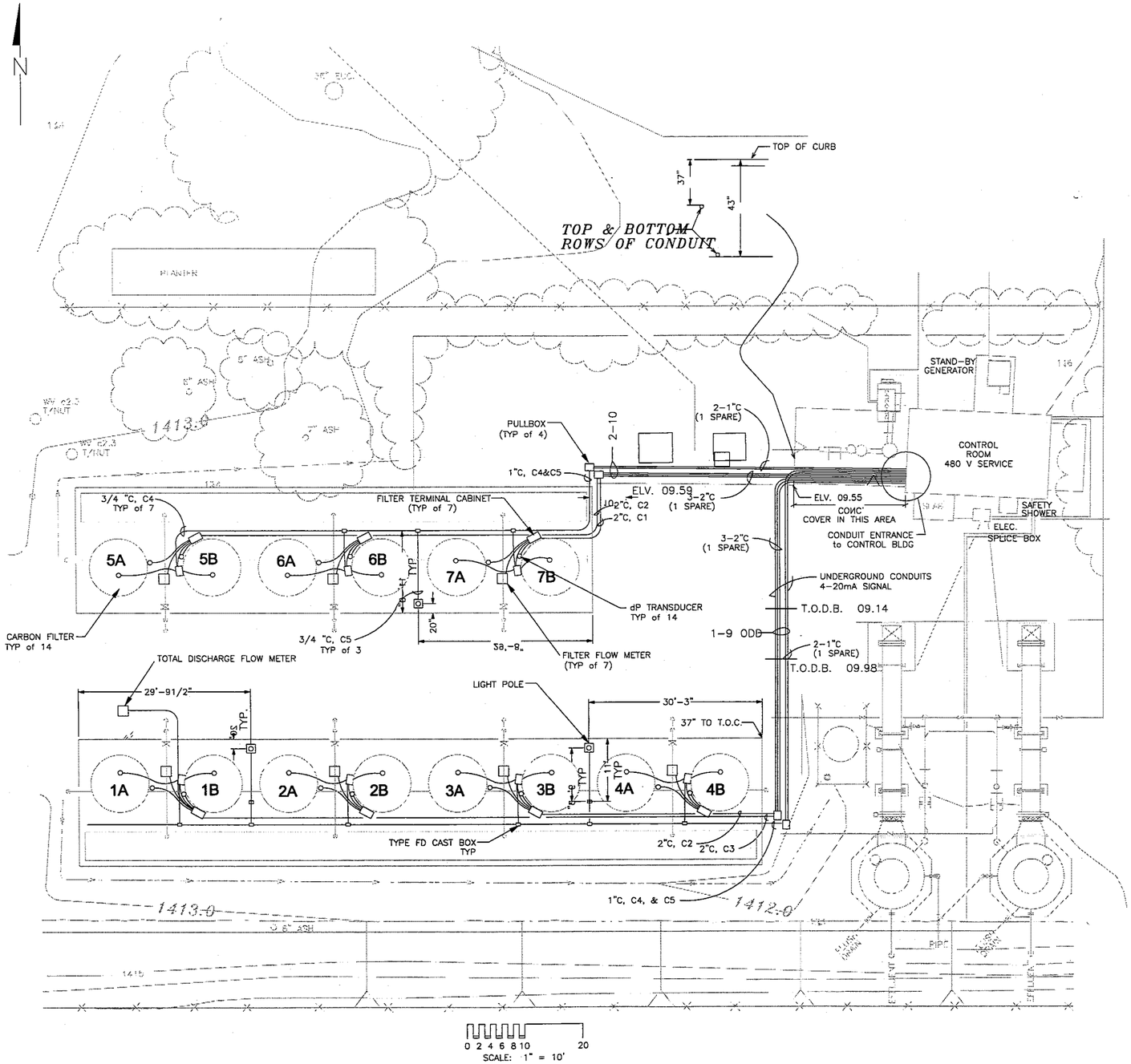

DESIGNATIONS:

C1	4-2P#20, IS/OS
C2	8-2P#20, IS/OS
C3	9-2P#20, IS/OS
C4	2#12 & #12G, THWN
C5	2#10 & #10G, THWN

2P#20 = TWO PAIR, #20AWG, STANDED, COPPER, 300V
IS/OS = INDIVIDUALLY SHIELDED with OVERALL SHIELD

SURFACE ROUTED CONDUIT

SUBSURFACE ROUTED CONDUIT

NO.	DATE	DESCRIPTION	NO.	DATE	DESCRIPTION

REVISIONS

DESIGNED BY: PS
DRAWN BY: ETB
CHECKED BY: CHECK

URS
2520 Venture Oaks Way, Suite 250
Sacramento, California 95833-3200
TEL: (916) 929-3346 FAX: (916) 929-7263

NEWMARK OU REMEDIAL DESIGN
NEWMARK GROUNDWATER
CONTAMINATION SUPERFUND SITE

CARBON FILTER / NORTH PLANT
ELECTRICAL SITE PLAN

SCALE:	DATE:	DWG. FILE:	SHEET NO.
SCALE	7/26/01	010726FIG2-6.DWG	Figure 2-7

NEWMARK/20010726 ETB Oct 15, 2001 010726fig2-6.dwg

* GROUND CABLE SHIELD at ONE END ONLY, WHERE INDICATED

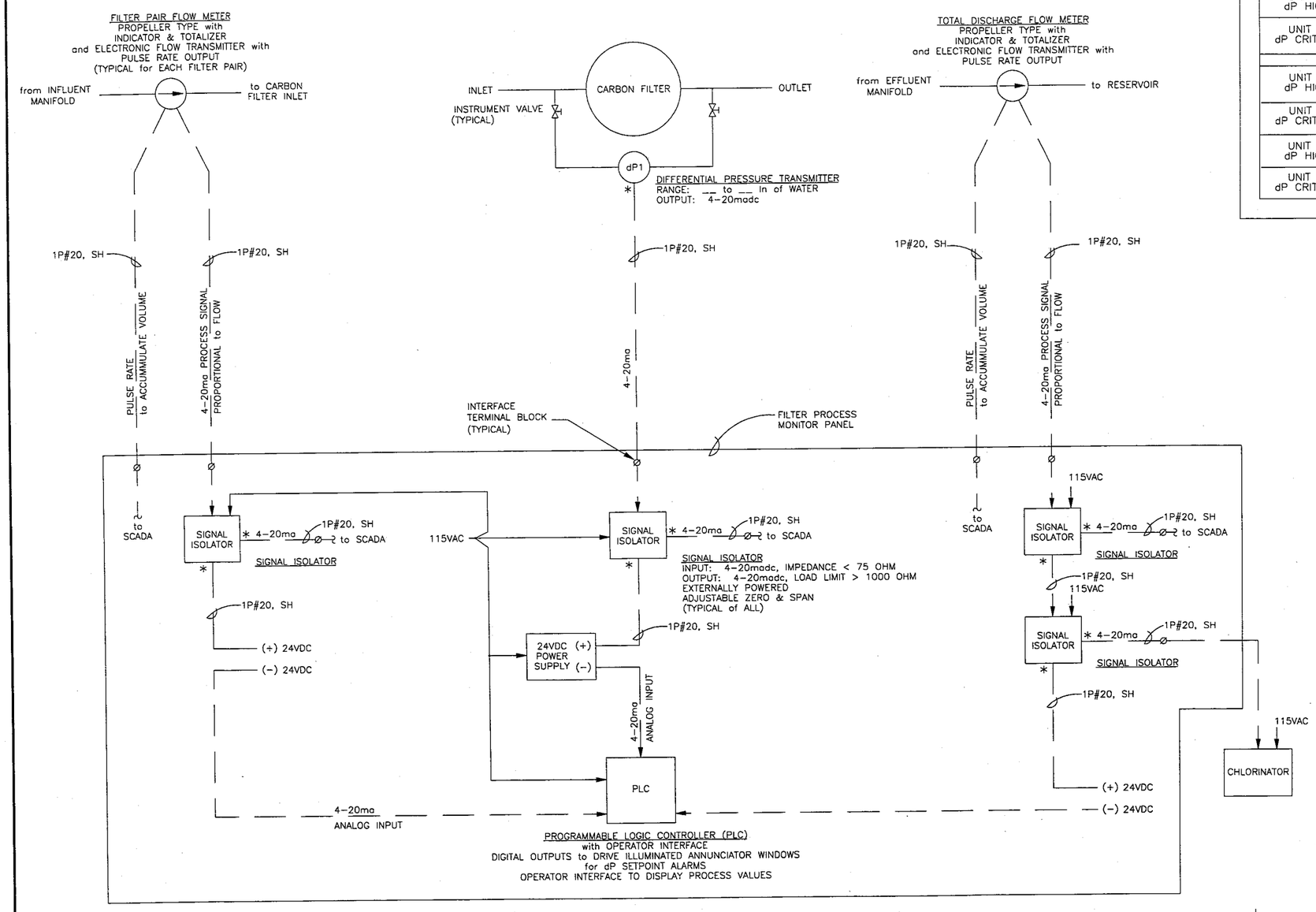

UNIT No. A-1 dP HIGH ALARM	UNIT No. C-1 dP HIGH ALARM	UNIT No. E-1 dP HIGH ALARM	UNIT No. G-1 dP HIGH ALARM	
UNIT No. A-1 dP CRITICAL ALARM	UNIT No. C-1 dP CRITICAL ALARM	UNIT No. E-1 dP CRITICAL ALARM	UNIT No. G-1 dP CRITICAL ALARM	
UNIT No. A-2 dP HIGH ALARM	UNIT No. C-2 dP HIGH ALARM	UNIT No. E-2 dP HIGH ALARM	UNIT No. G-2 dP HIGH ALARM	
UNIT No. A-2 dP CRITICAL ALARM	UNIT No. C-2 dP CRITICAL ALARM	UNIT No. E-2 dP CRITICAL ALARM	UNIT No. G-2 dP CRITICAL ALARM	
UNIT No. B-1 dP HIGH ALARM	UNIT No. D-1 dP HIGH ALARM	UNIT No. F-1 dP HIGH ALARM	UNIT No. H-1 dP HIGH ALARM	
UNIT No. B-1 dP CRITICAL ALARM	UNIT No. D-1 dP CRITICAL ALARM	UNIT No. F-1 dP CRITICAL ALARM	UNIT No. H-1 dP CRITICAL ALARM	
UNIT No. B-2 dP HIGH ALARM	UNIT No. D-2 dP HIGH ALARM	UNIT No. F-2 dP HIGH ALARM	UNIT No. H-2 dP HIGH ALARM	
UNIT No. B-2 dP CRITICAL ALARM	UNIT No. D-2 dP CRITICAL ALARM	UNIT No. F-2 dP CRITICAL ALARM	UNIT No. H-2 dP CRITICAL ALARM	

PLC OUTPUT ALARMS - ANNUCIATOR WINDOWS

SHOWN FOR 8 PAIRS of FILTERS AND SIMILAR FOR ALL BUT MODIFIED FOR THE ACTUAL NUMBER OF FILTER PAIRS.

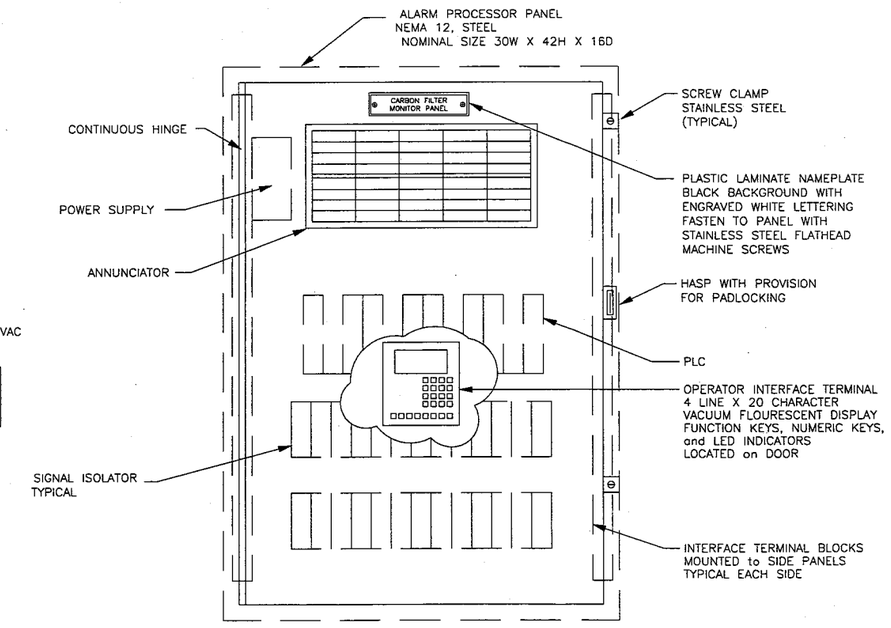

FILTER PROCESS MONITOR PANEL

BLOCK DIAGRAM FILTER FLOW DATA

SHOWN FOR ONE FILTER PAIR and TYPICAL FOR EACH PAIR

FILTER dP ALARM - BLOCK DIAGRAM

SHOWN FOR ONE FILTER and TYPICAL FOR EACH

BLOCK DIAGRAM TOTAL DISCHARGE FLOW DATA

NO.	DATE	DESCRIPTION	NO.	DATE	DESCRIPTION

REVISIONS

DESIGNED BY: PS
DRAWN BY: ETB
CHECKED BY: CHECK

URS
2520 Venture Oaks Way, Suite 250
Sacramento, California 95833-3200
TEL: (916) 929-2346 FAX: (916) 929-7383

NEWMARK OU REMEDIAL DESIGN
NEWMARK GROUNDWATER
CONTAMINATION SUPERFUND SITE

CARBON FILTERS
MONITOR PANEL

SCALE:	DATE:	DWG. FILE:	SHEET NO.
SCALE	6\26\00	010726FIG2-7.DWG	Figure 2-8

NEWMARK/20010726 ETB Oct 15, 2001 010726fig2-7.dwg

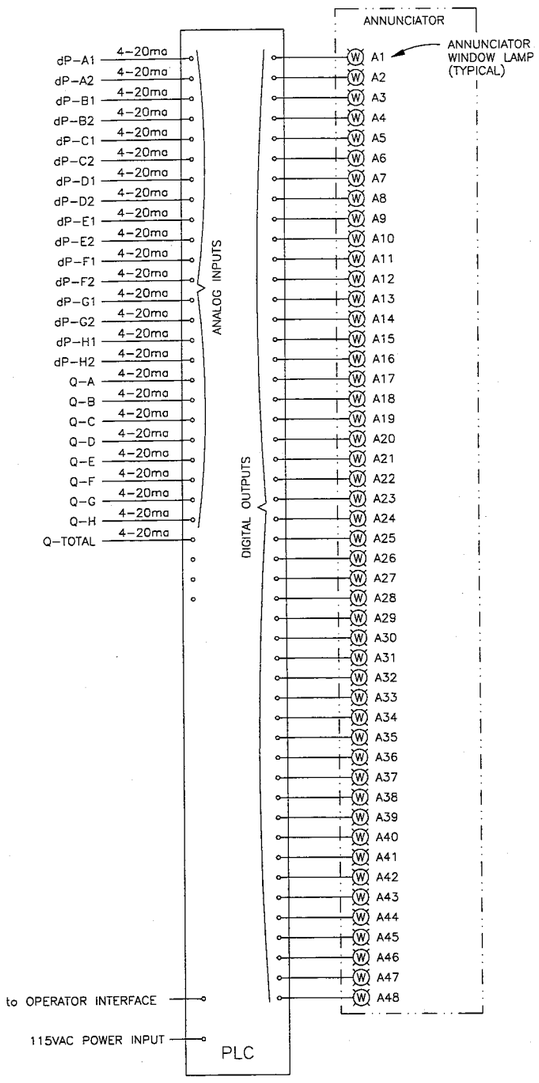

PLC BLOCK DIAGRAM

dP-( ) = DIFFERNTIAL PRESSURE SIGNAL
Q-( ) = FLOW SIGNAL
A( ) = ANNUNCIATOR LAMP OUTPUT

SHOWN FOR SITE WITH EIGHT PAIR OF FILTERS AND SIMILAR FOR ALL EXCEPT MODIFIED FOR THE NUMBER OF FILTER PAIRS.

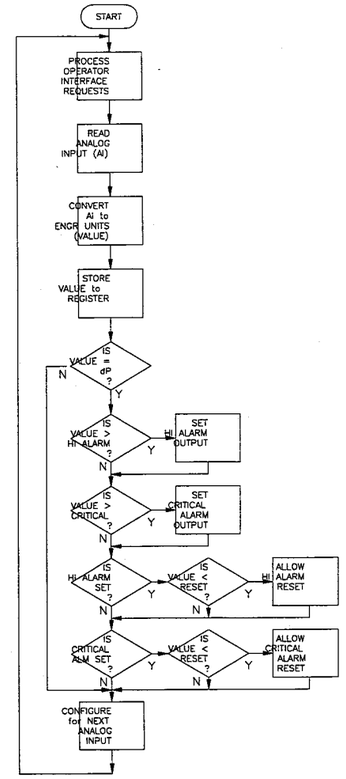

PLC LOGIC DIAGRAM

PLC PROGRAM REQUIREMENTS:

P1. THE PROGRAM SHALL INCLUDE AN AVERAGING ALGORITHM FOR THE ANALOG INPUTS. THE PARAMETERS FOR THE AVERAGING ALGORITHM SHALL BE ADJUSTABLE (THROUGH PROGRAM MODIFICATIONS – NOT THROUGH OIT). AS AN ALTERNATIVE, THE AVERAGING CAN BE CONFIGURED WITH THE HARDWARE AS A PART OF THE ANALOG INPUT CARDS.

P2. THE PROGRAM SHALL TEST ANALOG INPUT REASONABILITY (I.E. 4ma < AI < 20ma). ANALOG INPUTS WHICH FAIL REASONABILITY SHALL BE ALARMED WITH MESSAGE TO THE OIT.

OPERATOR INTERFACE REQUIREMENTS:

O1. SELECTIVELY VIEW DIFFERENTIAL PRESSURE VALUES

O2. SELECTIVLY VIEW FILTER FLOW VALUE

O3. CHANGE DIFFERENTIAL PRESSURE HIGH ALARM SETPOINT

O4. CHANGE DIFFERENTIAL PRESSURE CRITICAL ALARM SETPOINT

O5. CHANGE DIFFERENTIAL PRESSURE HIGH ALARM RESET POINT

O6. CHANGE DIFFERENTIAL PRESSURE CRITICAL ALARM RESET POINT

O7. INITIATE ALARM AKNOWLEDGE

O8. INITIATE ALARM RESET

O9. INTIATE ANNUNCIATOR LAMP TEST

ANNUNCIATOR FUNCTION and SEQUENCE

A1. WHEN ALARM CONDITION EXISTS, APPROPRIATE ANNUNCIATOR WINDOW SHALL FLASH AT THE RATE 1/2 SEC ON, 1/2 SEC OFF.

A2. WHEN ALARM IS ACKNOWLEDGED (OIT FUNCTION KEY), FLASHING DISPLAY SHALL BE REPLACED WITH STEADY ON DISPLAY. IF ADDITIONAL ALARMS OCCUR AFTER AKNOWLEDGE FUNCTION HAS BEEN INITIATED, THESE SHALL FLASH UNTIL SUBSEQUENTLY ACKNOWLEDGED.

A3. WHEN ALARM IS RESET (OIT FUNCTION KEY), ALL INDICATIONS NOT CURRENTLY IN ALARM CONDITION SHALL BE EXTINGUISHED. INDICATIONS REMAINING IN ALARM CONDITION SHALL CONTINUE TO ILLUMINATE.

A4. WHEN LAMP TEST (OIT FUNCTION KEY) IS INTIATED, ALL LAMPS SHALL ILLUMINATE FOR A THREE SECOND PERIOD.

FILTER	GROUP	No.	A
FLT #1	dP:	XX.X	In.
FLT #2	dP:	XX.X	In.
FLOW:	XXX.X	GPM	

OPERATOR INTERFACE TERMINAL TYPICAL DISPLAY MESSAGE

SHOWN for FILTER GROUP No. A AND TYPICAL for GROUPS B THROUGH H

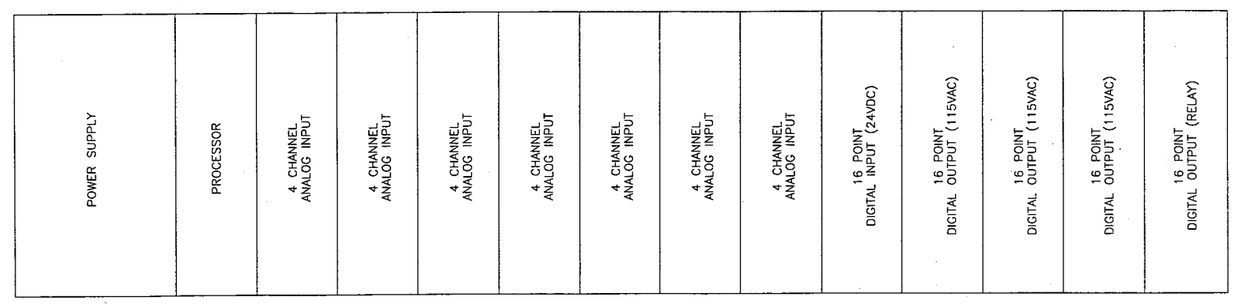

PLC CHASSIS LAYOUT

NO.	DATE	DESCRIPTION	NO.	DATE	DESCRIPTION

REVISIONS

DESIGNED BY: PS
DRAWN BY: ETB
CHECKED BY: CHECK

URS
2520 Venture Oaks Way, Suite 250
Sacramento, California 95833-3200
TEL: (916) 929-2346 FAX: (916) 929-7283

NEWMARK OU REMEDIAL DESIGN
NEWMARK GROUNDWATER
CONTAMINATION SUPERFUND SITE

CARBON FILTER PANEL
PLC DIAGRAMS

SCALE:	DATE:	DWG. FILE:	SHEET NO.
NONE	7/26/01	010726FIG2-1.DWG	Figure 2-9

NEWMARK/20010726 ETB Oct 15, 2001 010726fig2-6.dwg

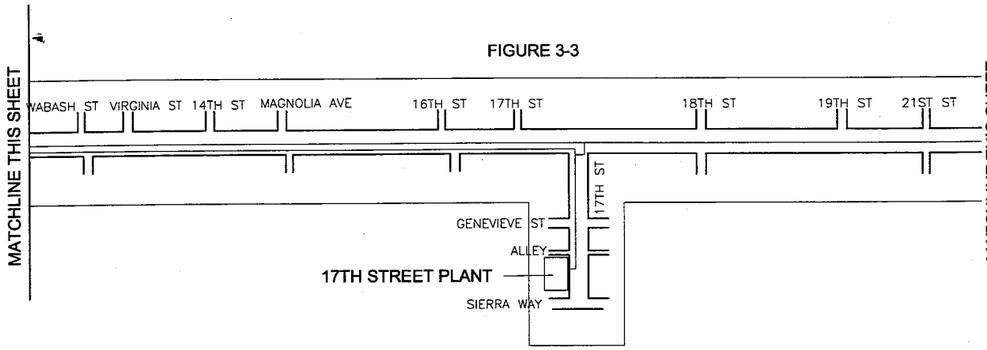

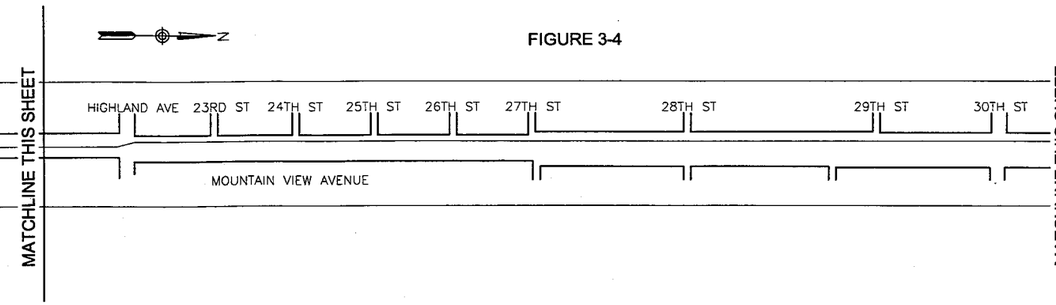

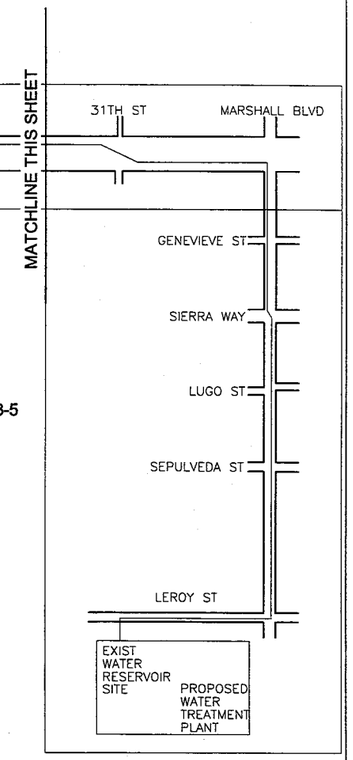

FIGURE 3-5

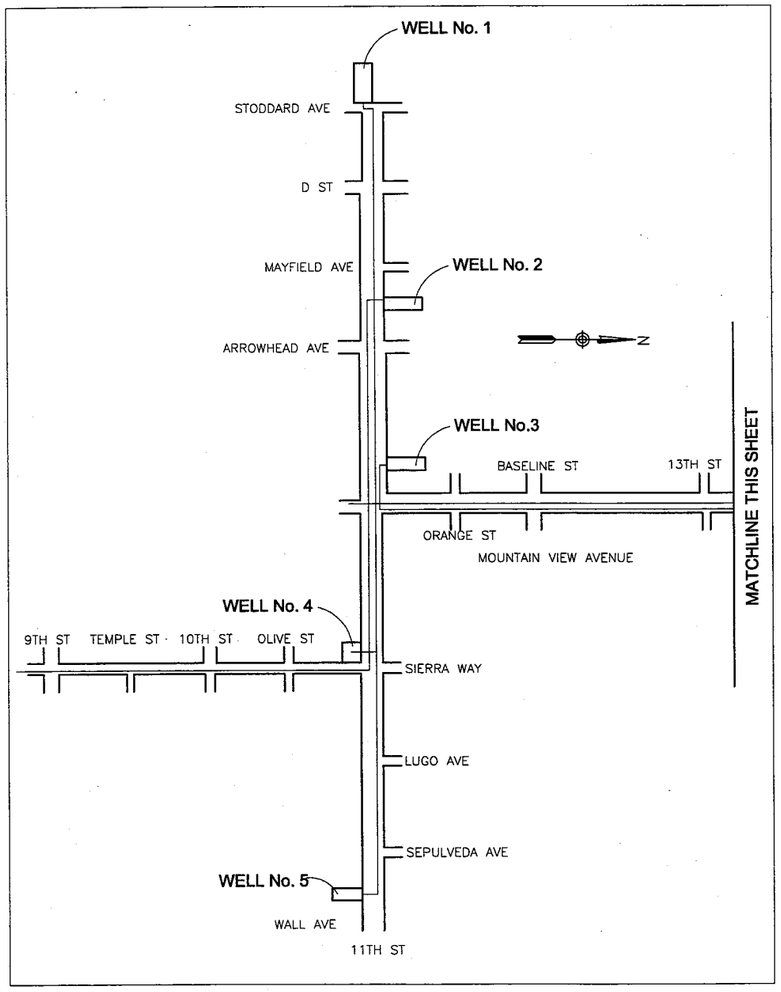

FIGURE 3-2

LEGEND

- EXISTING BURIED FACILITY
- CENTERLINE
- RIGHT-OF-WAY
- NEW PIPELINE
- MANHOLE
- GATE VALVE
- REDUCER
- BUTTERFLY VALVE
- COMBINATION AIR VALVE
- BLOW OFF

ABBREVIATIONS

ARV	AIR RELEASE VALVE
BF	BLIND FLANGE
BFV	BUTTERFLY VALVE
BO	BLOW OFF
CAV	COMBINATION AIR VALVE
CL	CEMENT LINED
℄	CENTERLINE
D	DRAIN
DIP	DUCTILE IRON PIPE
E	ELECTRICAL
ECC	ECCENTRIC
FCA	FLANGED COUPLING ADAPTOR
FLG	FLANGED
G	GAS
GB	GRADE BRAKE
INV	INVERT ELEVATION
LF	LINEAL FEET
⅊	LAYOUT LINE
MJ	MECHANICAL JOINT
N.C.	NORMALLY CLOSED
N.O.	NORMALLY OPEN
PRV	PRESSURE REDUCING VALVE
RCP	REINFORCED CONCRETE PIPE
RED	REDUCER
RW	RIGHT-OF-WAY
S	SLOPE
SBCFCD	SAN BERNADINO COUNTY FLOOD CONTROL DISTRICT
SS	SANITARY SEWER
STA	STATION
T	TELEPHONE
W	WATER
W/	WITH
WP	WRAPPED

NO.	DATE	DESCRIPTION	NO.	DATE	DESCRIPTION

REVISIONS

DESIGNED BY: STL
DRAWN BY: JW
CHECKED BY: DHD

URS
2870 Gateway Oaks Drive, Suite 300
Sacramento, California 95833

NEWMARK OU REMEDIAL DESIGN
NEWMARK GROUNDWATER
CONTAMINATION SUPERFUND SITE

NEWMARK PIPELINE

Scale: NO SCALE | Date: 7/26/01 | Dwg. No.: 3-1

NEWMARK\010730ETB Sep 25, 2001 010730FIG3-1.dwg

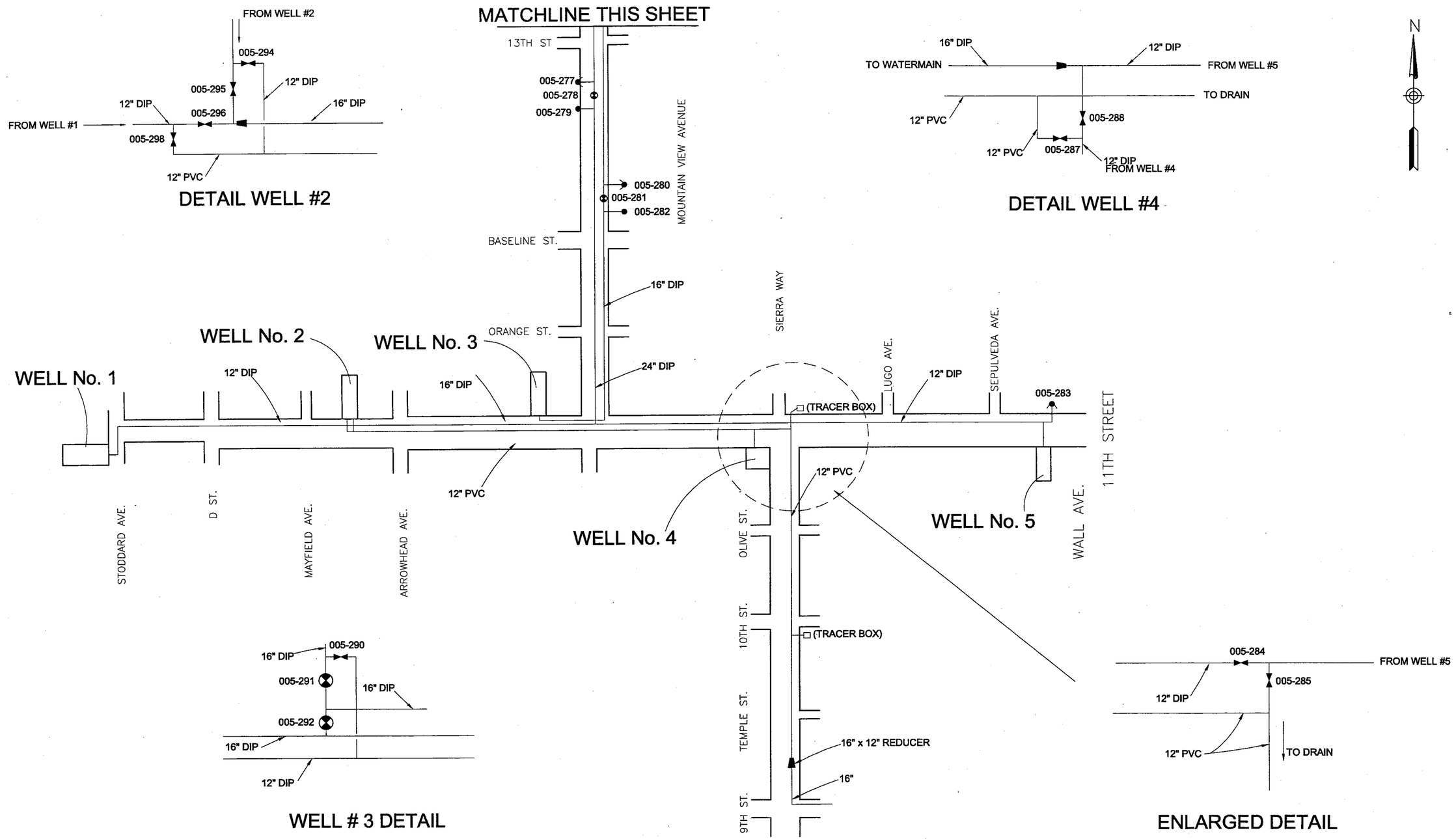

NO.	DATE	DESCRIPTION	NO.	DATE	DESCRIPTION

REVISIONS

DESIGNED BY: STL
DRAWN BY: JW
CHECKED BY: DHD

URS
2870 Gateway Oaks Drive, Suite 300
Sacramento, California 95833

NEWMARK OU REMEDIAL DESIGN
NEWMARK GROUNDWATER
CONTAMINATION SUPERFUND SITE

NEWMARK PIPELINE

Scale: NO SCALE | Date: 7/26/01 | Dwg. No.: 3-2

Sacgraf1\Project\Newmark Sep 25, 2001 010730FIG3-2.dwg ETB

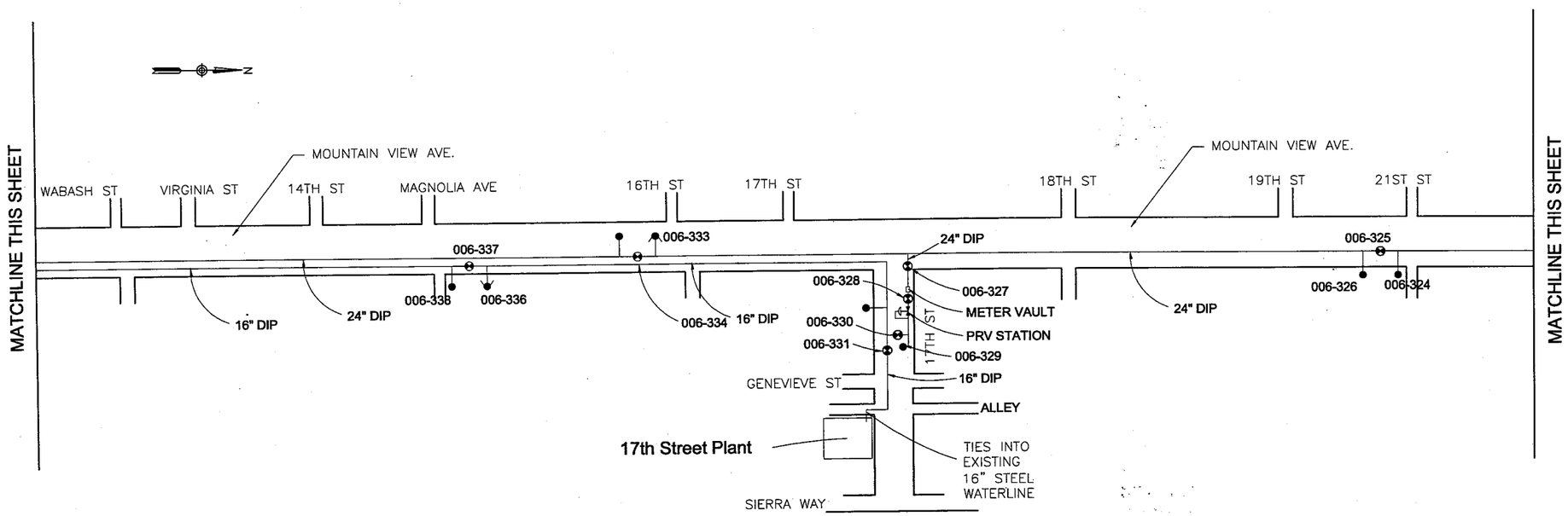

NO.	DATE	DESCRIPTION	NO.	DATE	DESCRIPTION

REVISIONS

DESIGNED BY: STL
DRAWN BY: JW
CHECKED BY: DHD

URS
2870 Gateway Oaks Drive, Suite 300
Sacramento, California 95833

NEWMARK OU REMEDIAL DESIGN
NEWMARK GROUNDWATER
CONTAMINATION SUPERFUND SITE

NEWMARK PIPELINE

Scale: NO SCALE | Date: 7/26/01 | Dwg. No.: 3-3

Sacgraf1\Project\Newmark Sep 25, 2001 010730FIG3-3.dwg ETB

NEWMARK\010730 ETB Sep 25, 2001 010730FIG3-3.dwg

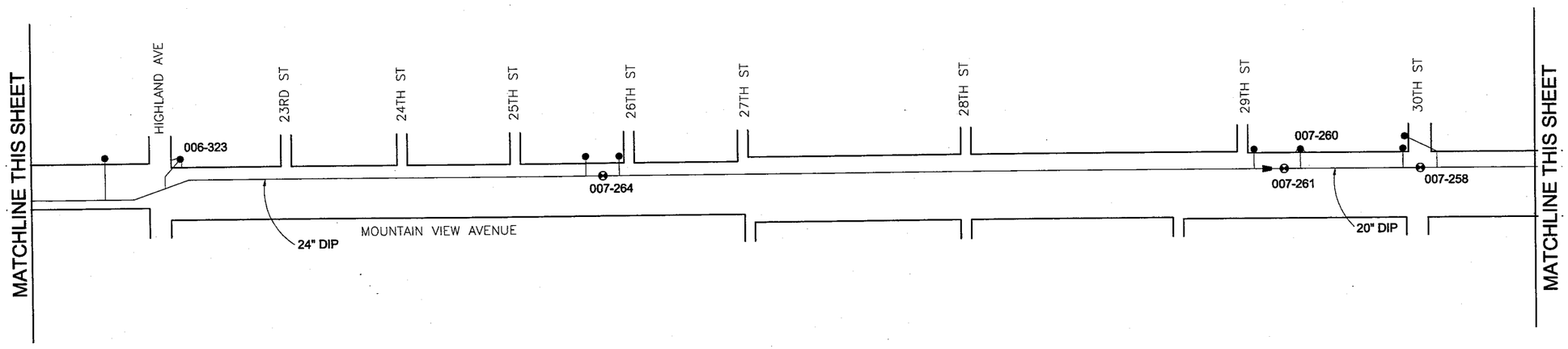

NO.	DATE	DESCRIPTION	NO.	DATE	DESCRIPTION

REVISIONS

DESIGNED BY: STL
DRAWN BY: JW
CHECKED BY: DHD

URS
2870 Gateway Oaks Drive, Suite 300
Sacramento, California 95833

NEWMARK OU REMEDIAL DESIGN
NEWMARK GROUNDWATER
CONTAMINATION SUPERFUND SITE

NEWMARK PIPELINE

Scale: NO SCALE | Date: 7/26/01 | Dwg. No.: 3-4

Sacgraft\Project\Newmark Sep 25, 2001 010730FIG3-4.dwg ETB

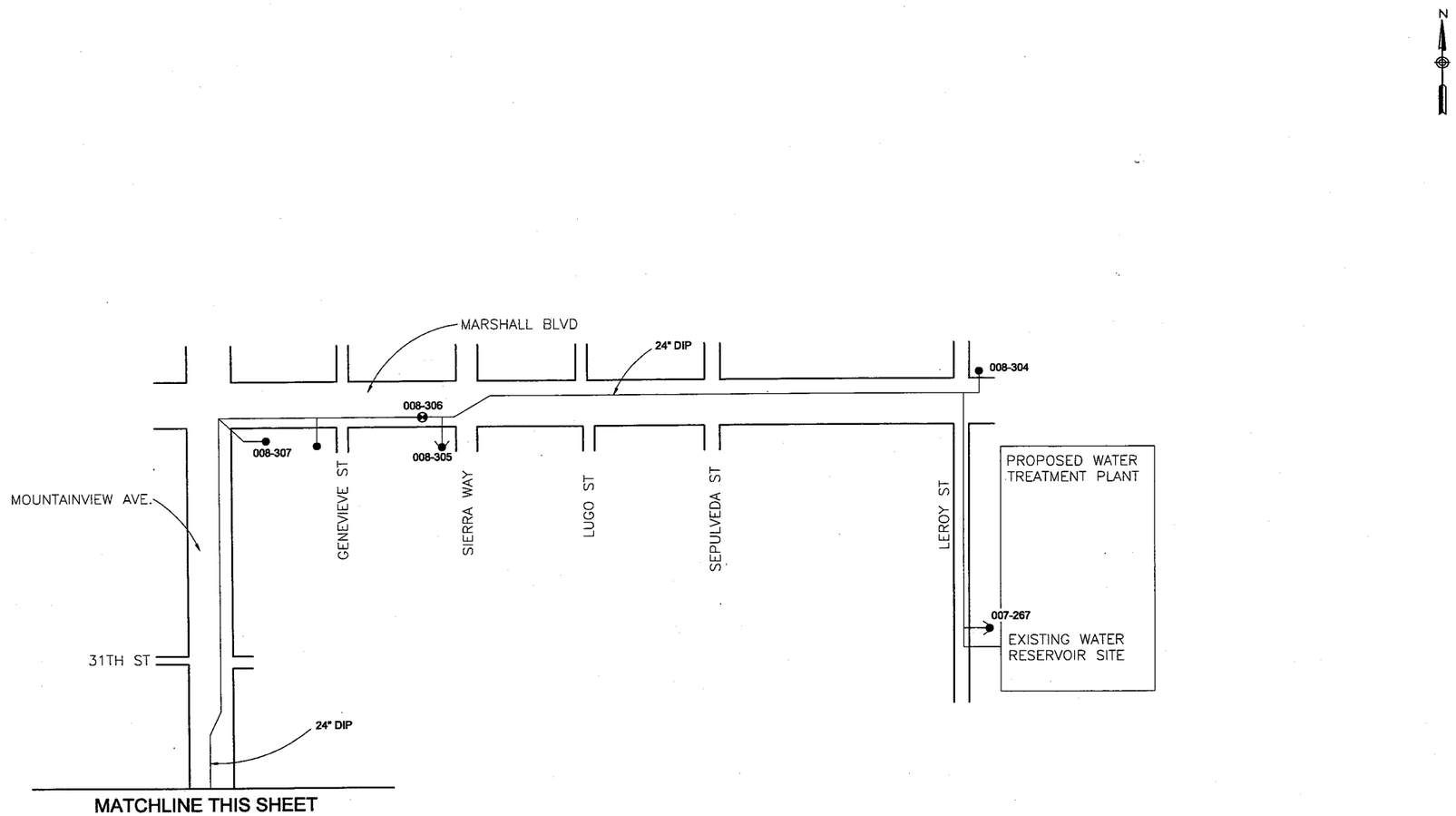

NO.	DATE	DESCRIPTION	NO.	DATE	DESCRIPTION

REVISIONS

DESIGNED BY: STL
DRAWN BY: JW
CHECKED BY: DHD

URS
2870 Gateway Oaks Drive, Suite 300
Sacramento, California 95833

NEWMARK OU REMEDIAL DESIGN
NEWMARK GROUNDWATER
CONTAMINATION SUPERFUND SITE

NEWMARK PIPELINE

Scale: NO SCALE | Date: 7/26/01 | Dwg. No.: 3-5

Sacaraf1\Project\Newmark Sep 25, 2001 010730FIG3-5.dwg ETB

NEWMARK\010730 ETB Sep 25, 2001 010730FIG3-5.dwg

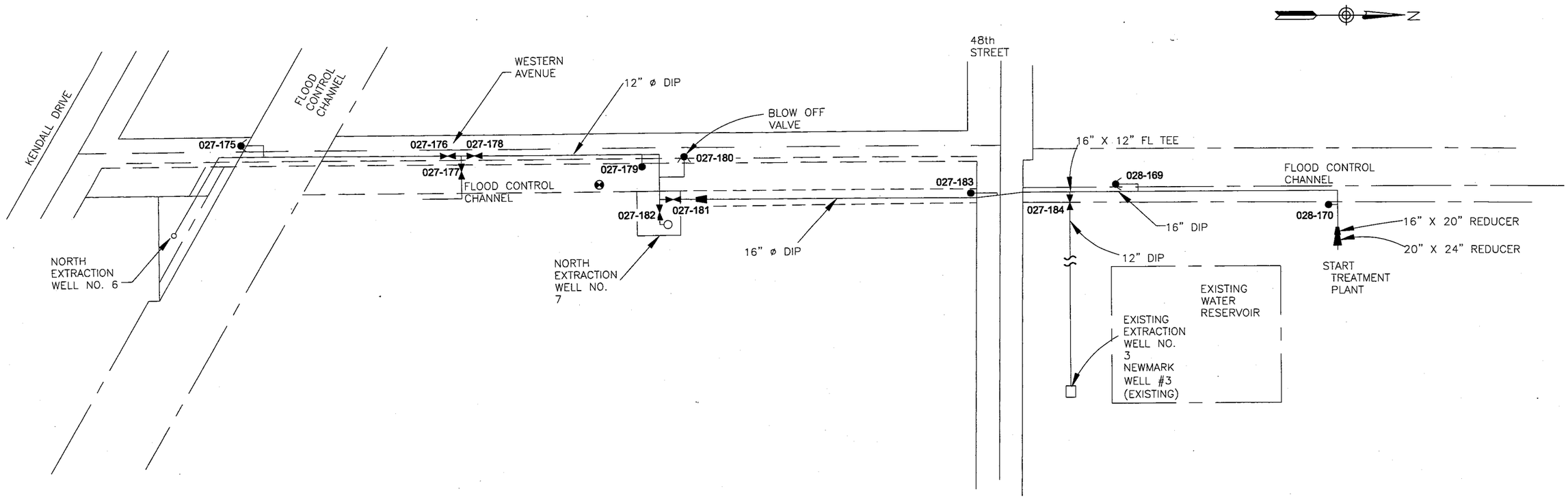

LEGEND

- EXISTING BURIED FACILITY
- CENTERLINE
- RIGHT-OF-WAY
- NEW PIPELINE
- MANHOLE
- GATE VALVE
- REDUCER
- BUTTERFLY VALVE
- COMBINATION AIR VALVE
- BLOW OFF

NO.	DATE	DESCRIPTION	NO.	DATE	DESCRIPTION

REVISIONS

DESIGNED BY: STL
DRAWN BY: JW
CHECKED BY: DHD

URS
2870 Gateway Oaks Drive, Suite 300
Sacramento, California 95833

NEWMARK OU REMEDIAL DESIGN
NEWMARK GROUNDWATER
CONTAMINATION SUPERFUND SITE

NEWMARK PIPELINE

Scale: NO SCALE | Date: 7/26/01 | Dwg. No.: 3-6

NEWMARK\010730 ETB Sep 25, 2001 010730FIG3-6.dwg

APPENDIX A

HYDRAULIC GRADELINES

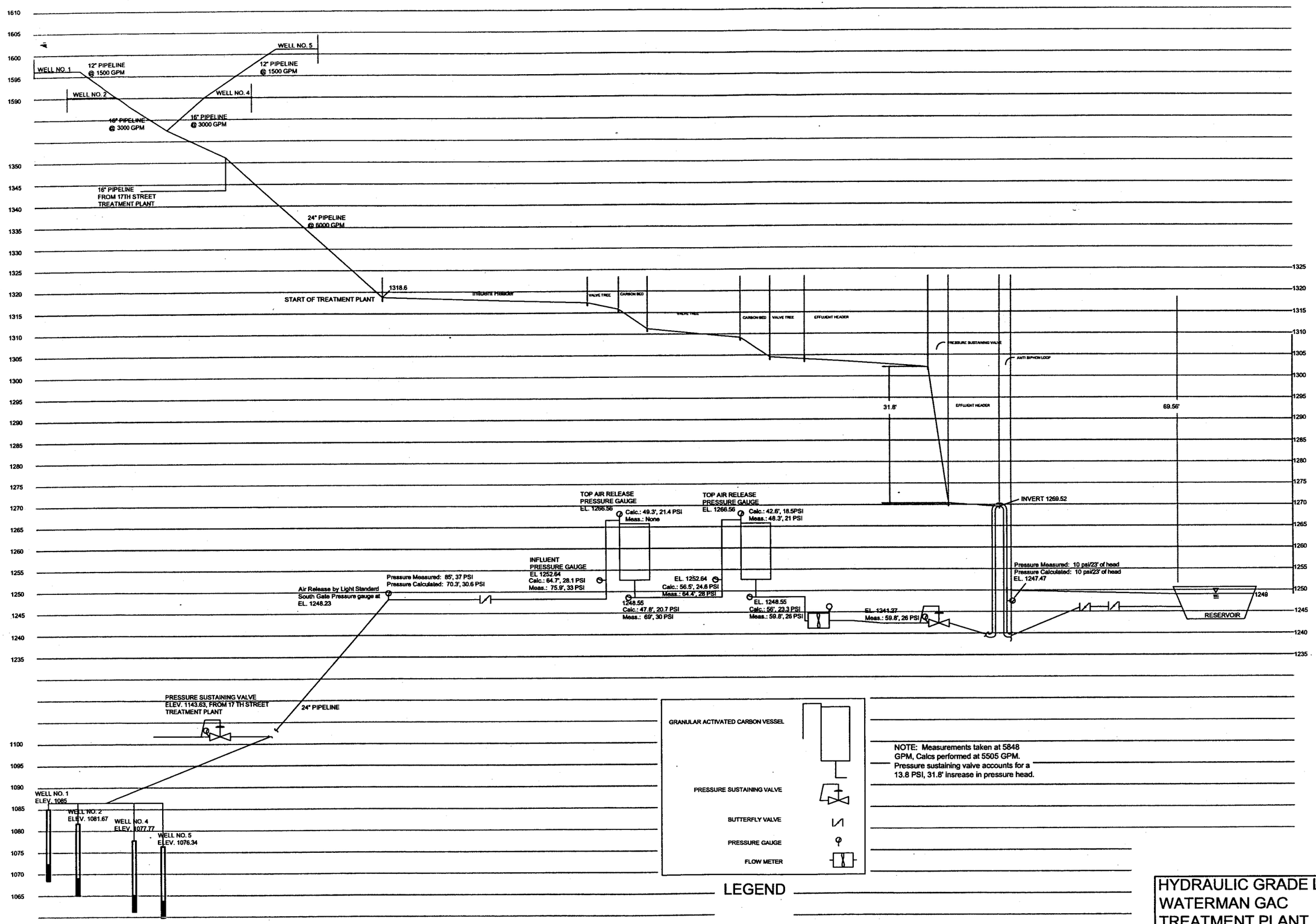

NOTE: Measurements taken at 5848 GPM, Calcs performed at 5505 GPM. Pressure sustaining valve accounts for a 13.8 PSI, 31.8' insrease in pressure head.

HYDRAULIC GRADE LINE WATERMAN GAC TREATMENT PLANT	FIGURE A-1
	9/25/01

T:/ENVIRONMENTAL/NEWMARKRA/EW1245TOWATERMAN.DWG

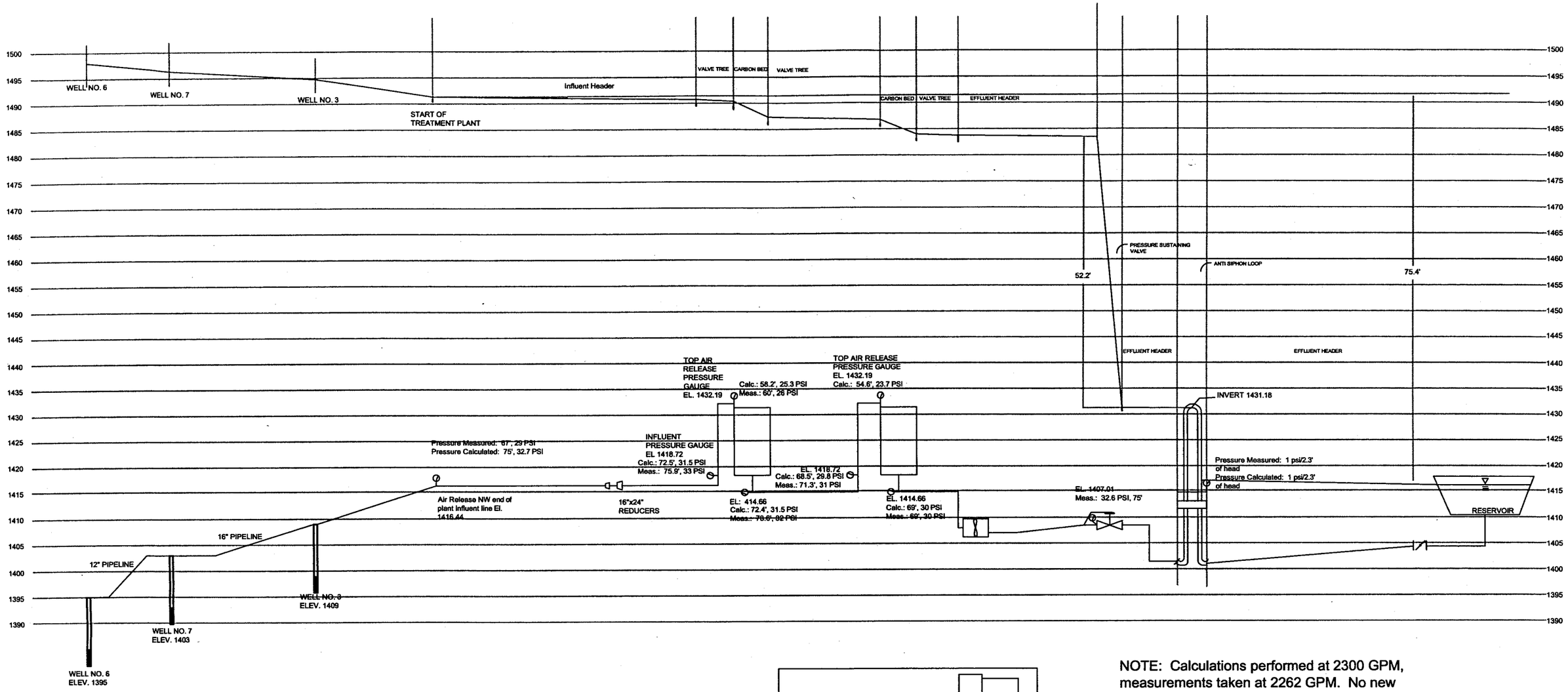

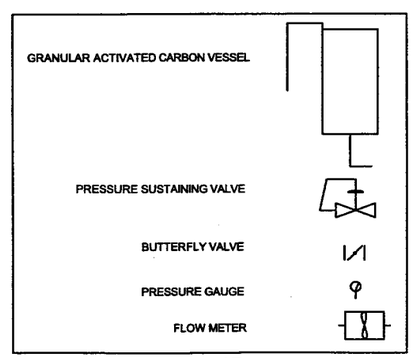

LEGEND

NOTE: Calculations performed at 2300 GPM, measurements taken at 2262 GPM. No new measurements could be taken at the original plant influent measurement location (Air-vac at fence). Pressure sustaining valve accounts for a 22.7 PSI, 52.2' of pressure head increase in the treatment plant. Dissolved gasses could be heard coming out of solution at the effluent Flow Meter.

HYDRAULIC GRADELINE NORTH GAC TREATMENT PLANT	FIGURE A-2
	9/25/01

T:/ENVIRONMENTAL/NEWMARKRA/NORTH PLANT HGL.DWG

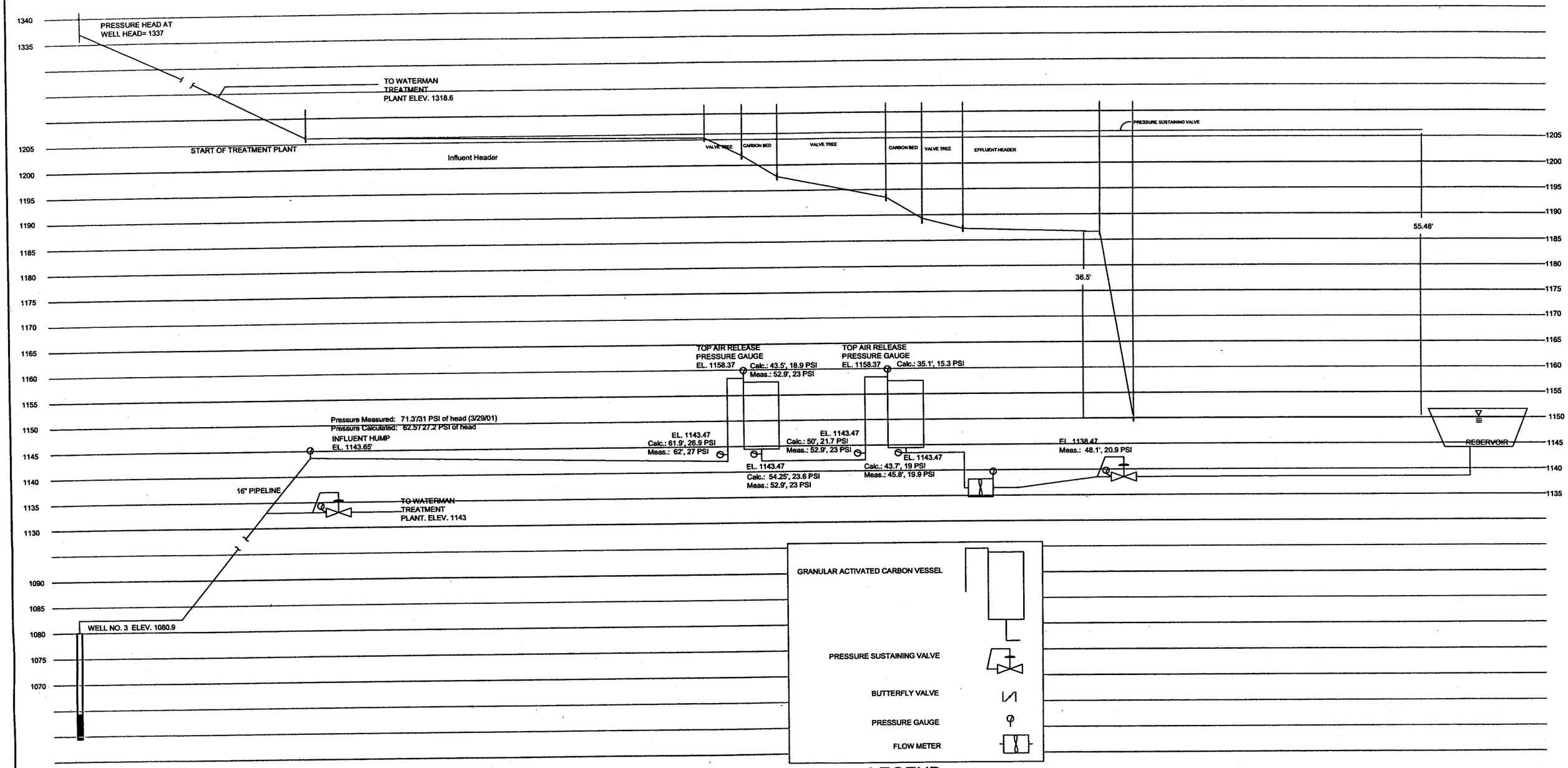

LEGEND

NOTES: Measurements taken at 2050 GPM. Calculation performed at 1950 GPM. Vessel pair at 750 GPM. Old influent pressure (start of plant) measured was 42 PSI, and it is now at 31 PSI. Pressure sustaining valve is increasing plant pressure by 15.9 PSI/36.5'.

HYDRAULIC GRADELINE 17TH STREET GAC TREATMENT PLANT	FIGURE A-3
	9/25/01

T:/ENVIRONMENTAL/NEWMARKRA/WELL3T0117TH HGL.DWG

APPENDIX C

Letters and Notifications

UNITED STATES ENVIRONMENTAL PROTECTION AGENCY
REGION IX
75 Hawthorne Street
San Francisco, CA 94105

September 29, 2000

Mr. James Dye
City of San Bernardino Municipal Water Department
195 N. "D" Street
San Bernardino, CA 92401

Dear James,

This letter serves as an official notice of the start of the Long Term Remedial Action (LTRA) for the Newmark Operable Unit as of October 1st, 2000. During the Performance Evaluation period, which lasted between October 1998 and September 2000, the treatment system has been performing and achieving capture as designed (see Attachment A: Summary of Performance from October 1998 - April 1999, from the first 6-month Operation Report by URS). Preliminary data after April 1999 showed that this performance has been maintained. All operational data from April 1999 to date will be included in the URS Final Project Performance Technical Memorandum and Report.

During this Performance Evaluation period, several major problems were found at the treatment plants: i) inadequate telemetry system ii) air exhaust from the GAC vessels, and iii) bad wiring cables for the filter monitoring system.

The air exhaust problem was rectified after a series of tests and evaluation of alternative solutions. URS installed automatic back pressure valves to keep the dissolved gasses in solution in the water during treatment. New wiring cables were installed at URS cost. Resulting from this latest retrofitting, a few minor problems still exist at the treatment plants, as identified in the attached memo by Michael Lowe (Attachment B: Outstanding Problems at the Newmark OU). These problems do not affect the performance of the system, although they need to be addressed for long term operation efficiency.

These problems should be addressed as follows (more detailed responses to these problems are provided in the Attachment B):

1) SCADA: SBMWD should replace the telemetry using the existing RA funding, as approved by the US EPA.
2) Filter Monitoring System: several instruments have been identified to be not working properly. A walkthrough scheduled for October 2000 will determine any remaining issues and how to address them.

3) Pressure Sustaining Transducers: these are expected to be installed by the end of October.

4) Aquifer level transducers: any necessary work to be performed will be done by SBMWD, using the existing RA funding.

5) Loss of flow capacity at some wells: depending on the cause of this problem (increasing head pressure or water drawn down), SBMWD will perform any necessary work to ensure capture of the contaminated plume. URS is currently evaluating the effect of the loss of flow capacity on capture, and will recommend a course of action in the near future. To prevent future instrumentation failure, EPA will discuss with URSG and SBMWD to recommend that SBMWD use alternative instruments better suited to current operating conditions. SBMWD should also explore other sources of carbon with better adsorption property.

A funding action was completed in September 2000. As part of this funding, EPA has committed $906,000 to fund any remaining RA expenses for the Newmark OU, and $906,000 for one year of LTRA to start in October 1, 2000. All operations prior to September 30, 2000 and any expenses incurred in the future related to capital retrofitting of the treatment system (as identified above) should still be charged to the RA funding category. Any remaining RA funding after the retrofit will be used for future LTRA. All other routine Operation and Maintenance work after October 1st, 2000 should be charged to the LTRA fund.

A number of reports are still outstanding from both URS and SBMWD. The list of the outstanding URS activities (listed by Task number in the RAC contract) is summarized in Attachment C. SBMWD's list of outstanding reports is included in Attachment D.

If you have any questions or comments, please let me know.

Sincerely Yours,

/s/

Kim-Chi T. Hoang, Ph.D.
RPM

Attachments (A-D)

ec: Loren Henning
John Kemmerer
Cheryl Filart
Dwayne Deutscher
Dennis Bane
Bill Bryden
Bernie Kersey
David Katzki

Attachment A

Newmark and Muscoy Operation data:

PLANT	MAXIMUM DESIGN RATE (gpm)	ORIGINAL OPERATING RATE (gpm)	ACTUAL AVERAGE RATE (gpm) Oct 98 - Apr 99	* FUTURE DESIGN RATE (gpm)
Waterman	6,000	5,200	4,827	5,100
17th St.	2,250	2,000	1,880	2,000
Newmark	5,250	3,900	2,790	3,900**
19th St	12,000			10,600
Total (gpm)	25,500	11,100 (Newmark only)	9,497 (Newmark only)	21,600 (both Newmark/Muscoy)
Total (acre-ft/yr)			15,319 acre-ft/yr	34,985 acre-ft/yr

* Based on first six months of operation
** Future rate may be reduce as a result of current capture analyses

CONTAMINATE REMOVAL (first 6 months from Oct 1998 - Apr 99)

PLANT	DESIGN CONCENT. (ug/l)		ACTUAL CONCENT. (ug/l)	
	PCE	TCE	PCE	TCE
Waterman	35	7	1	0.9
17th St.	35	7	3	1
Newmark	35	7	6	1

After treatment, all samples are at the non-detect level.

Attachment B

CITY OF SAN BERNARDINO
MUNICIPAL WATER DEPARTMENT
INTEROFFICE MEMORANDUM

TO: **Bill Bryden**

FROM: **Michael Lowe**

SUBJECT: **EPA Deficiencies as of September 25, 2000**

DATE: **09/17/2004**

COPIES: **James Dye, Bernard Kersey, Michael Garland, Rick Stilts, File**

During the meeting with EPA September 21, 2000 Kim Hoang, USEPA requested that we notify her of the work still required to finish the Newmark OU prior to October 1, 2000. She requested this list be simple and outline the areas that will still require funding to complete. Below are the areas that have not been completed to the satisfactory of the Department;

- **SCADA** (Supervisory Control and Data Acquisition) ATSI (Advanced Telemetry Systems International) Labor and support to complete $25,000.)
  Parts from stock: 2 ea. 91100 Standard RTU @ $4,600 ea.
  4 ea. Level Transmitter Duratran @ $662.00 ea.
  2 ea. Antenna @ $17.80 ea.
  Misc. Department labor; $4,000.00

  Approx total; $40,883.60

  RESPONSE: The SBMWD's existing (at the time the Newmark system was added) SCADA system did not have the capacity to handle the additional data input load from the Newmark and eventually the Muscoy systems. The EPA authorized the SBMWD to make necessary improvements to their SCADA system last year. Funding for this task should be from the RA funding category.

- **Filter Monitoring System** (to include metering, alarming instruments, differentials pressure switches, Programmable Logic Controller and possible wiring.)

17th St Treatment Plant

1. Carbon Filtering Monitoring Panel (Not Operating) Make; Allen Bradley, Cost; unknown
2. Differential Pressure switches (unable to check because of status of Carbon Filtering Monitoring Panel (Not Operating) Make; unknown, Cost; unknown.

Waterman Treatment Plant

1. Differential Pressure switches; Total 16, not operating 1, needs calibrating 7. Make; unknown, Cost; unknown
2. Carbon vessel influent meters all working at units; 3 not reading at Carbon Filtering Monitoring Panel (wiring or program problem)

Newmark Treatment Plant

1. Differential Pressure switches; Total 14, not operating 0, needs calibrating 7. Make; unknown, Cost; unknown.
3. Carbon vessel influent meters; 1 not working, 2 not reading at Carbon Filtering Monitoring Panel (wiring or program problem). Make; Water Specialties Cost; unknown

RESPONSE: EPA first heard of instrumentation problems in the spring of 2000, almost 2 years after the completion of the construction, and they were associated to the installation of the incorrect wire during initial construction and its subsequent failure after getting wet. After installation of the new correct wire, during the wire continuity check run to verify the correct installation of the re-wiring, URS' representative noted numerous instrumentation problems and provided a summary and analysis of the inspection results at the regular design meeting August 23, 2000. At this time, the cause of these instrumentation problems is not clear to EPA. An inspection is planned for October 2000 with representatives of the SBMWD and URS to investigate each instrument failure and recommend a solution.

- **Pressure Sustaining Transducers**

17th St Treatment Plant

1. The pressure sustaining transducer belonging to new pressure valves have not been installed and wired back to the control panel. Make, model, unknown they were never installed.)

Waterman Treatment Plant

1. The pressure sustaining transducer belonging to new pressure valves have not been installed and wired back to the control panel. Make, model, unknown they were never installed.)

Newmark Treatment Plant

1. The pressure sustaining transducer belonging to new pressure valves have not been installed and wired back to the control panel. Make, model, unknown they were never

installed.)

RESPONSE: The plans for the back pressure valve retrofit project as designed by URS and approved by the SBMWD specified high pressure shut off switches to protect the GAC vessels from over pressurization. These switches are installed and operable. Subsequently, the SBMWD requested that we install pressure transducers so the pressure could be remotely monitored and controlled. With EPA approval we made this change. However, there was a several month lead time on the transducers. They have been received and will be installed the week of 9/25/00.

- **Aquifer Level Transducers** (at all well sites)
  1. 5 Transducers are currently in for repair. We have had all transducers repaired at least once and about 50% repaired twice. 33% of them are currently in for repair. Make; KPSI 4/20ma, approximate cost $800.00 ea.
  2. Possible cause is URS keeps removing them to sample aquifer and jostling them. Transducers are sensitive instruments and should not be handled this often. Please direct URS to install sampling pump to remedy this situation.
  3. If sampling pumps are installed and I recommend it so that we get accurate data then someone will need to address that issue, I have no idea what they cost but it will require 12 pumps for 2" Piezometers set at depths required by URS. The Department should not be liable for the transducers failing when they are being removed and re-installed by URS and the only way to remedy this is with pumps.
  4. Replace current transducers with a better more stable transducer. Cost; approximately 13 @ $1,500 ea. Total; $19,500 Labor to replace; $6,500.

RESPONSES:

- The EPA has not experienced any transducer failures in the 28 transducers installed as part of the LTMP monitoring program.
- URS does not believe that they have miss-handled the transducers. There is a requirement that the extraction well pizometers be sampled over the life of the project. One solution is to have City Water Department personal, remove the transducers for sampling access. Another possible solution is to install dedicated sampling pumps. Please note that these wells were designed and installed by the City Water Department and it has been suggested by EPA in the past that dedicated pumps be installed. In other words this problem was identified in the past.
- Installation of dedicated sample pumps is advised and that if requested URSG will be happy to discuss sample pump requirements with the Agency. Please note that there are maintenance requirements for bladder pumps and that this is not set and forget equipment.

- **North Plant Wells** (since the added pressure sustaining valves the do not pump as designed; loss of flow capacity.)
  1. EPA #6, Design; 1000 GPM @ 245 TDH. Currently 669 GPM @ 291 TDH. If it requires another bowl cost $5,000 to $7,000. Motor and Starter is currently sized for this.
  2. EPA #7, Design; 1300 GPM @ 235 TDH. Currently 750 GPM @ 272 TDH. If it requires another bowl cost $5,000 to $7,000. If it requires New Bowls it could cost as much as $15,000.00. The motor was changed out with Newmark 3 when it was repaired in anticipation of this and is sized at 150 HP and should meet any additional HP requirement. The started make have to be upsized to accommodate the additional load at approximately $1,500.00.

  RESPONSE:
  - URSG is currently evaluating the performance of the extraction well network as part of the Performance Report. A review of the July 2000 Excel spreadsheet data supplied by the City Water Department indicate that EPA 6 and EPA 7 are pumping at flow rates of 878 GPM and 1125 GPM respectively. URSG are not sure why there has been a decrease in flow rate sense July but we have observed an overall decrease in water levels over the past year(s).
  - It is URSG's understanding that the back pressure at the North plant was manually increased on September 7, 1999 and that the valves recently installed do the same job automatically. As such we do not think that the recent installation of the back pressure valves can explain such a high loss in flow.

- **EPA Well 7**
  PROBLEM: The aquifer did not perform as designed. (Included in North Plant Wells above after Dennis Banes redesigns.)

  RESPONSE: URS believes what SBMWD intended to say in this comment was that the aquifer did not respond as modeled. URS is not sure what is meant by the redesign comment.

SUMMARY

In the future, a more formal communication strategy needs to be implemented, so that EPA and URSG can be alerted immediately of any problems or concerns that arise as opposed to wait until they become serious issues. The flow rates from EPA 6 and 7 are a good example of this. The instant the flow rate dropped off we should have been notified so that we could evaluate its affect in a timely matter. We will be assessing this situation once pertinent data can be obtained.

Michael H. Lowe
Operations Superintendent

URSG TASKS/DELIVERABLES REQUIRED
TO COMPLETE
NEWMARK RA WORK ASSIGNMENT (WA# 015-RARA-09J5)

TASK 2: COMMUNITY RELATIONS

- Web site development

TASK 3: SITE SPECIFIC PLANS

- Coordinate with local emergency response teams

TASK 7: CLEANUP VALIDATION

- Finalize Six-Month Report

TASK 8: RA IMPLEMENTATION

- Complete back pressure valve installation (Install pressure transducers)

TASK 9: PROJECT PERFORMANCE

- Submit draft O&M Manuals
- Finalize O&M Manuals
- Maintain monitoring wells (On going thru end of WA or transfer to Source OU)
- Prepare draft and final Project Performance Tech Memo and Report

TASK 10: PROJECT COMPLETION AND CLOSEOUT

- Complete As-builts
- Prepare draft and final RA Report

TASK 11: WORK ASSIGNMENT CLOSEOUT

- Perform closeout activities

Attachment D

SBMWD OUTSTANDING REPORTS ON NEWMARK OU

PROJECT PERFORMANCE

- Quarterly reports
- SBMWD component of O&M Manuals
- SBMWD component of final RA report

UNITED STATES ENVIRONMENTAL PROTECTION AGENCY
REGION IX
75 Hawthorne Street
San Francisco, CA 94105

April 2, 2002

Mr. James Dye
City of San Bernardino Municipal Water Department
195 N. "D" Street
San Bernardino, CA 92401

Dear James:

This letter serves as an official notice of the end of the remedy activities to the construction of the Newmark Operable Unit of the Newmark Superfund Site. During the Performance Evaluation period of the Newmark Operable Unit, which lasted between October 1998 and September 2000, several major problems were found at the treatment plants: i) inadequate telemetry system ii) air exhaust from the GAC vessels, and iii) bad wiring cables for the filter monitoring system.

URS Corp. addressed the air exhaust from the GAC vessels in FY2000. In a letter dated September 2000 listing these problems in detail, SBMWD was charged to address the remaining problems, and was funded $906,000 in FY2000 to cover for the cost of these remaining RA activities. SBMWD was also funded $906,000 in FY2001 for one year of LTRA at the Newmark Operable Unit.

As of March 31 2002, SBMWD expects to have $417,826 remaining from the RA FY2000 funding, and $68,701 from the FY2001 LTRA funding. This total remaining fund of $486,527 is to be transferred to FY2002 for LTRA funding. SBMWD will also be funded an additional $750,000 (of the $906,000 requested for FY2002 annual LTRA) as a final funding action for the third application of the cooperative agreeement #V999400-01 (Amendment #9).

In addition to all regular reports required by the cooperative agreement, SBMWD is required to submit a report summarizing all remedy activities to address the problems listed in the letter of September 2000, including a detailed description of parts and labor costs to address these problems.

If you have any questions or comments, please let me know.

Sincerely Yours,

/s/

Kim-Chi T. Hoang, Ph.D.
RPM

ec: Loren Henning
John Kemmerer
Cheryl Filart
Bill Bryden
Bernie Kersey