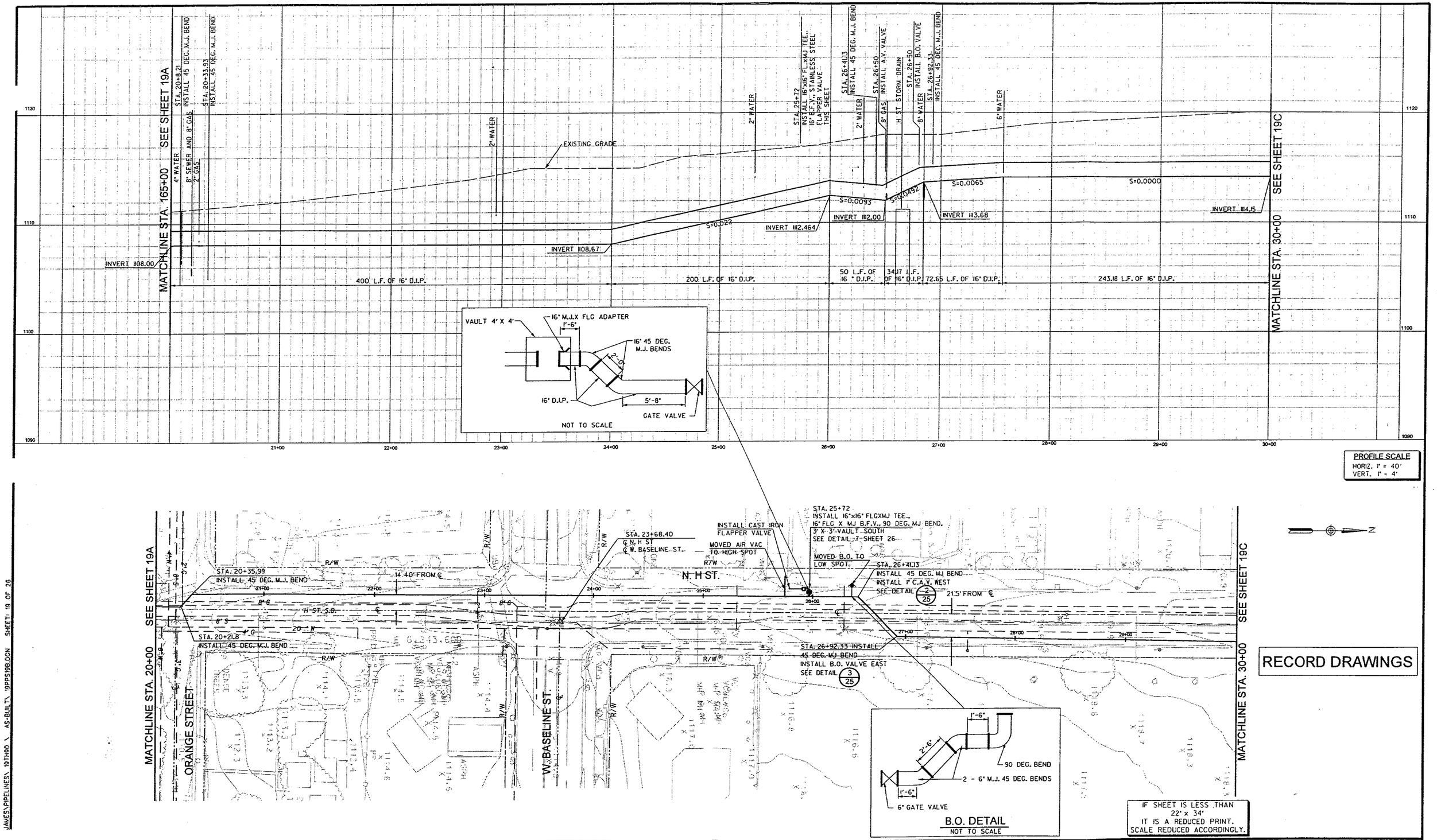

RECORD DRAWINGS

IF SHEET IS LESS THAN 22" x 34" IT IS A REDUCED PRINT. SCALE REDUCED ACCORDINGLY.

NO.	DATE	DESCRIPTION	NO.	DATE	DESCRIPTION
1	6/03	RECORD DRAWINGS			

REVISIONS

DESIGNED BY: JB
DRAWN BY: JC
CHECKED BY: DHD

URS
2520 Venture Oaks Way, Suite 250
Sacramento, CA 95833-3200
TEL: (916) 679-2000
FAX: (916) 929-7283

JOB No. 41-F2501400

REGISTERED PROFESSIONAL ENGINEER No. 34951 Douglas K. Beuthner EXP. 9/30/03 CIVIL STATE OF CALIFORNIA

MUSCOY OU REMEDIAL DESIGN
MUSCOY GROUNDWATER
CONTAMINATION SUPERFUND SITE

PLAN AND PROFILE
N. H ST - LINE D
STA. 20+00 TO STA. 30+00

Scale: 1" = 40' | Date: 07/2002 | Dwg. No.: 19 B

FILE: T:\PROJ\MUSC JAMES\PIPELINES\ 19TH90 \ AS-BUILT\ 19PPS19B.DGN SHEET: 19 OF 26

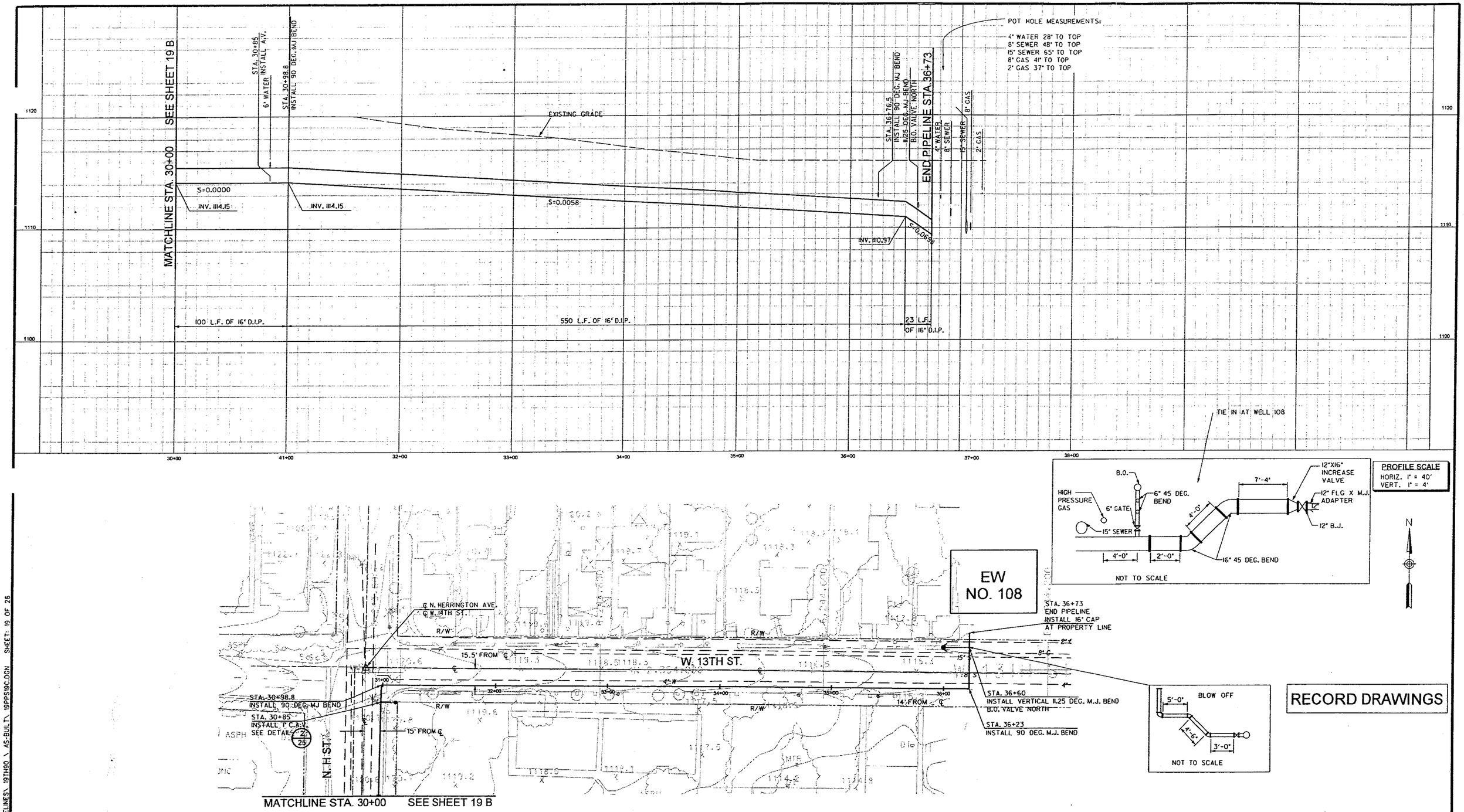

RECORD DRAWINGS

IF SHEET IS LESS THAN 22" x 34" IT IS A REDUCED PRINT. SCALE REDUCED ACCORDINGLY.

NO.	DATE	DESCRIPTION	NO.	DATE	DESCRIPTION
1	6/03	RECORD DRAWINGS			

REVISIONS

DESIGNED BY: JB
DRAWN BY: JC
CHECKED BY: DHD

URS
2520 Venture Oaks Way, Suite 250
Sacramento, CA 95833-3200
TEL: (916) 679-2000
FAX: (916) 929-7263

JOB No. 41-F2501400

REGISTERED PROFESSIONAL ENGINEER No. 34557 Gregory K. Dietrich EXP. 9/30/03 CIVIL STATE OF CALIFORNIA

MUSCOY OU REMEDIAL DESIGN
MUSCOY GROUNDWATER
CONTAMINATION SUPERFUND SITE

PLAN AND PROFILE
N. H ST. AND W. 13TH ST. - LINE D
STA. 30+00 TO STA. 37+21

Scale: 1" = 40' | Date: 07/2002 | Dwg. No.: 19 C

FILE: T:\PROJ\MUSC\JAMES\PIPELINES\19TH90 \ AS-BUILT\ 19PPS19C.DGN SHEET: 19 OF 26

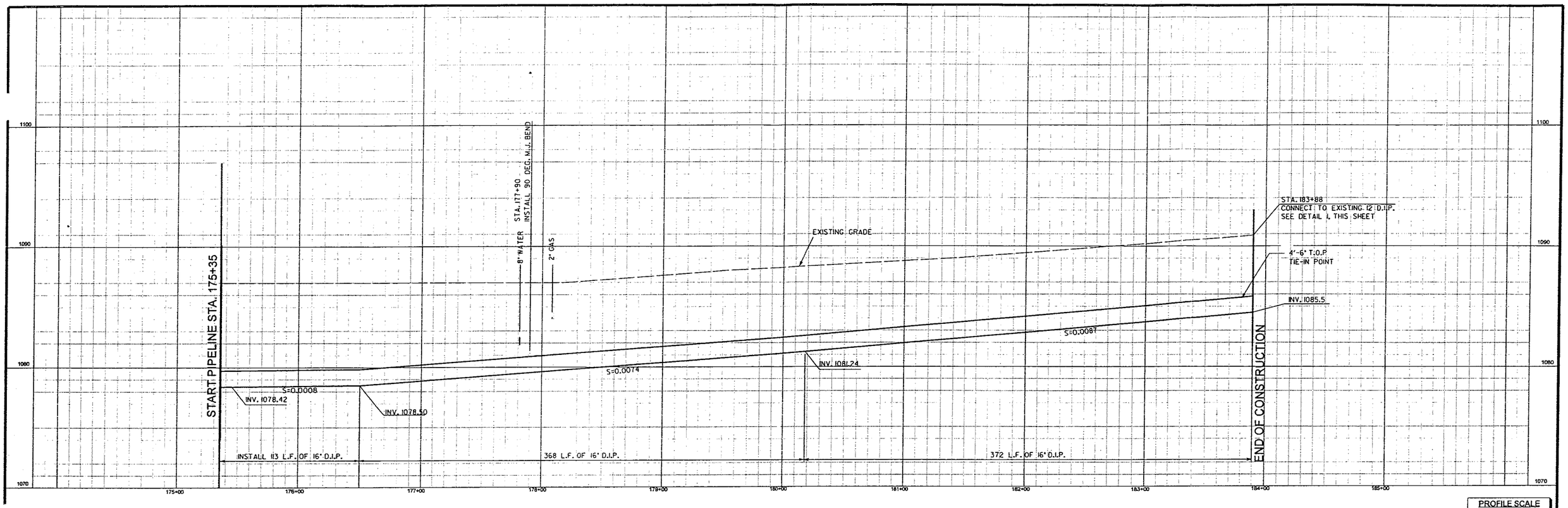

PROFILE SCALE
HORIZ. 1" = 40'
VERT. 1" = 4'

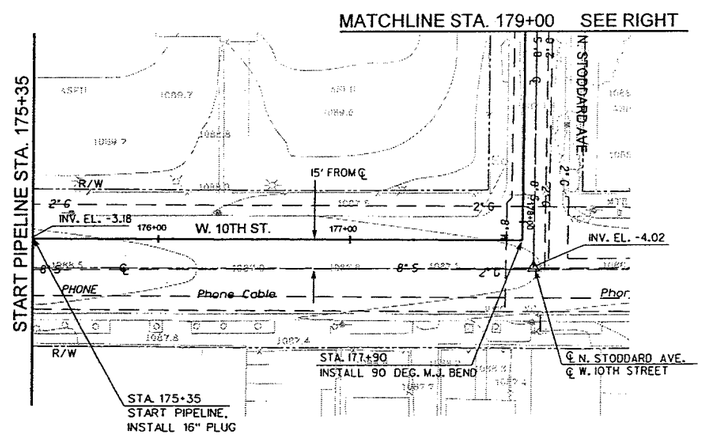

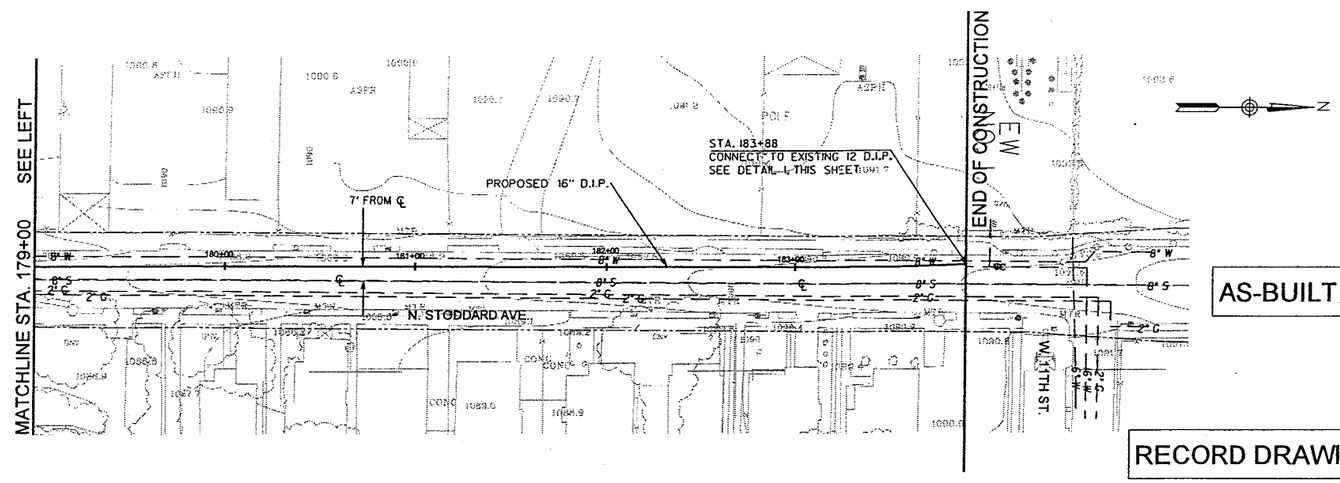

AS-BUILT

RECORD DRAWINGS

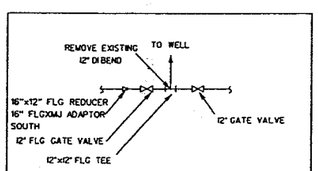

DETAIL 1

IF SHEET IS LESS THAN
22" x 34"
IT IS A REDUCED PRINT.
SCALE REDUCED ACCORDINGLY.

JAMES\PIPELINES\ 19TH90 \ AS-BUILT\ 19PPS20.DGN SHEET: 20 OF 26

FILE: T:\PROJ\MUSC

NO.	DATE	DESCRIPTION	NO.	DATE	DESCRIPTION
1	6/03	RECORD DRAWINGS			

REVISIONS

DESIGNED BY: JB
DRAWN BY: JC
CHECKED BY: DHO

URS
2530 Venture Oaks Way, Suite 250
Sacramento, CA 95833-3200
TEL: (916) 679-2000
FAX: (916) 679-2583

JOB No. 41-F2501400

REGISTERED PROFESSIONAL ENGINEER
No. 34571
Douglas H. Hutchinson
Exp. 3/31/03
CIVIL
STATE OF CALIFORNIA

MUSCOY OU REMEDIAL DESIGN
MUSCOY GROUNDWATER
CONTAMINATION SUPERFUND SITE

PLAN AND PROFILE
W. 10TH ST.
N. STODDARD AVE.
STA. 175+35 TO STA. 183+30

Scale: 1"=40' | Date: 07/2002 | Dwg. No.: 20

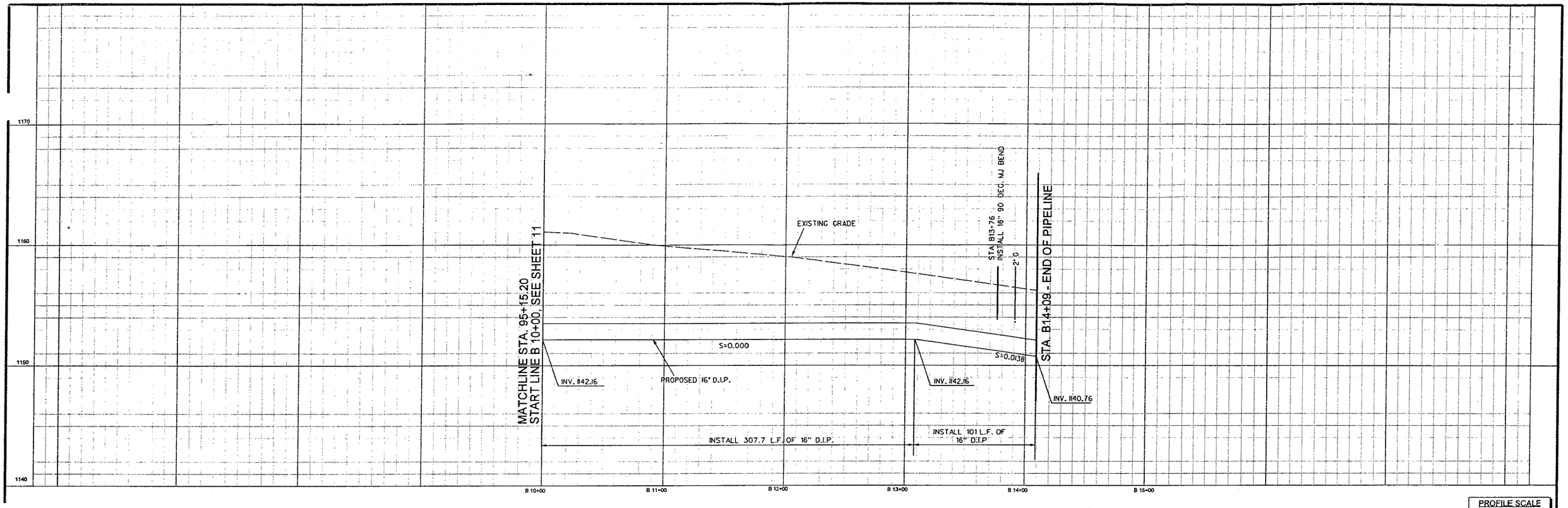

PROFILE SCALE
HORIZ. 1" = 40'
VERT. 1" = 4'

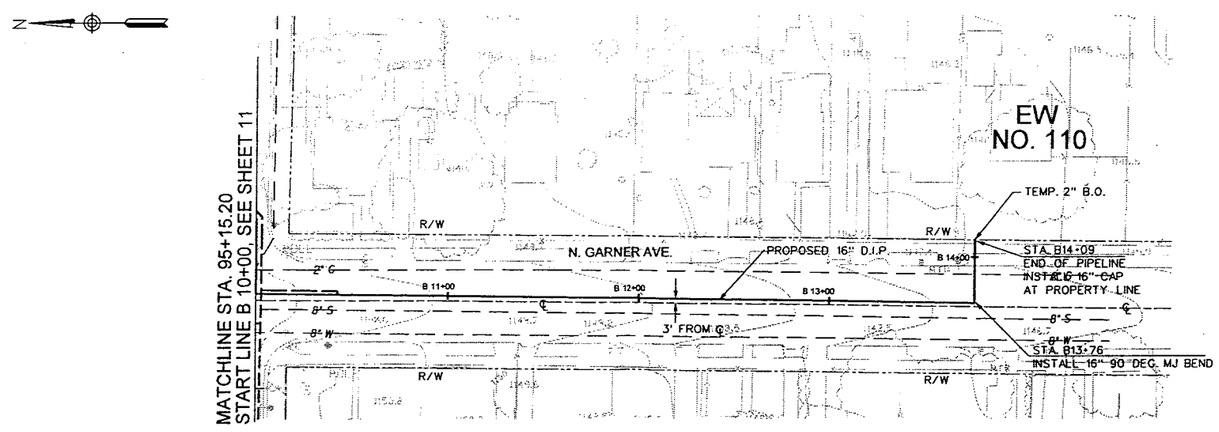

RECORD DRAWINGS

IF SHEET IS LESS THAN
22" x 34"
IT IS A REDUCED PRINT.
SCALE REDUCED ACCORDINGLY.

NO.	DATE	DESCRIPTION	NO.	DATE	DESCRIPTION
1	6/03	RECORD DRAWINGS			

REVISIONS

DESIGNED BY: JB
DRAWN BY: JC
CHECKED BY: DHD

URS
2520 Venture Oaks Way, Suite 250
Sacramento, CA 95833-3200
TEL: (916) 679-2000
FAX: (916) 929-7263

JOB No. 41-F2501400

REGISTERED PROFESSIONAL ENGINEER
No. 34557
Dwayne K. Bertschen
EXP. 9/30/03
CIVIL
STATE OF CALIFORNIA

MUSCOY OU REMEDIAL DESIGN
MUSCOY GROUNDWATER
CONTAMINATION SUPERFUND SITE

PLAN AND PROFILE
N. GARNER AVE
STA. B 10+00 TO B 14+09
TO EW NO. 110

Scale: 1"=40'
Date: 07/2002
Dwg. No.: 21

FILE: T:\PROJ\MUSC\ JAMES\PIPELINES\ 19TH90 \ AS-BULT\ 1PPS24.DGN SHEET: 24 OF 26

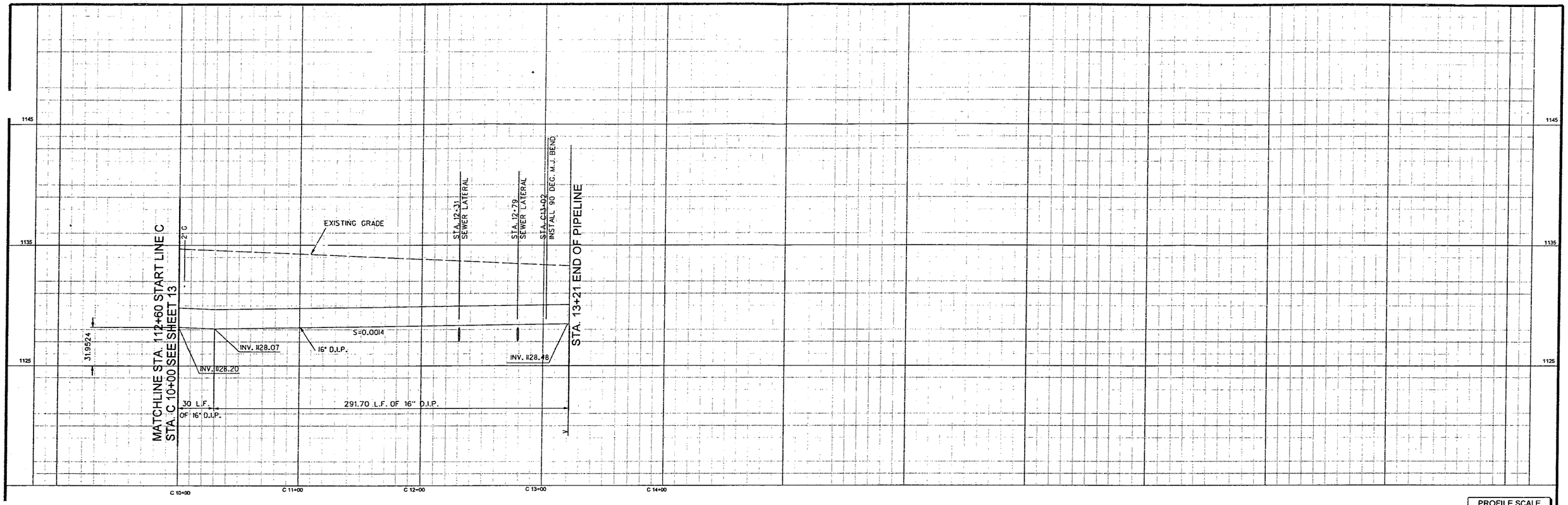

RECORD DRAWINGS

IF SHEET IS LESS THAN 22" x 34" IT IS A REDUCED PRINT. SCALE REDUCED ACCORDINGLY.

NO.	DATE	DESCRIPTION	NO.	DATE	DESCRIPTION
1	6/03	RECORD DRAWINGS			

REVISIONS

DESIGNED BY: JB
DRAWN BY: JC
CHECKED BY: DHD

URS
2520 Venture Oaks Way, Suite 250
Sacramento, CA 95833-3200
TEL: (916) 679-2000
FAX: (916) 929-7263

JOB No. 41-F2501400

REGISTERED PROFESSIONAL ENGINEER No. 34551 Dwayne S. Bautista EXP. 9/30/03 CIVIL STATE OF CALIFORNIA

MUSCOY OU REMEDIAL DESIGN
MUSCOY GROUNDWATER
CONTAMINATION SUPERFUND SITE

PLAN AND PROFILE
W. HOME STEET
STA. C10+00 TO STA. C13+21

Scale: 1"=40' | Date: 07/2002 | Dwg. No.: 22

FILE: T:\PROJ\MUSCOY\JAMES\PIPELINES\ 19TH90 \ AS-BUILT\ 19PPS25.DGN SHEET: 25 OF 26

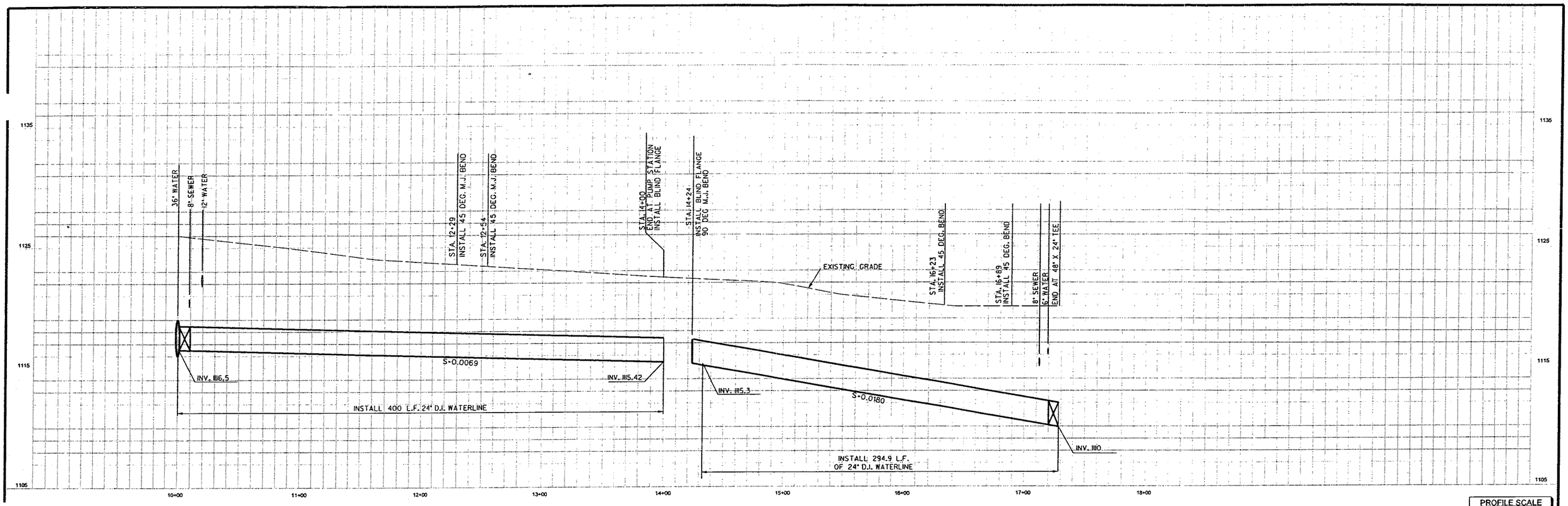

PROFILE SCALE
HORIZ. 1" = 40'
VERT. 1" = 4'

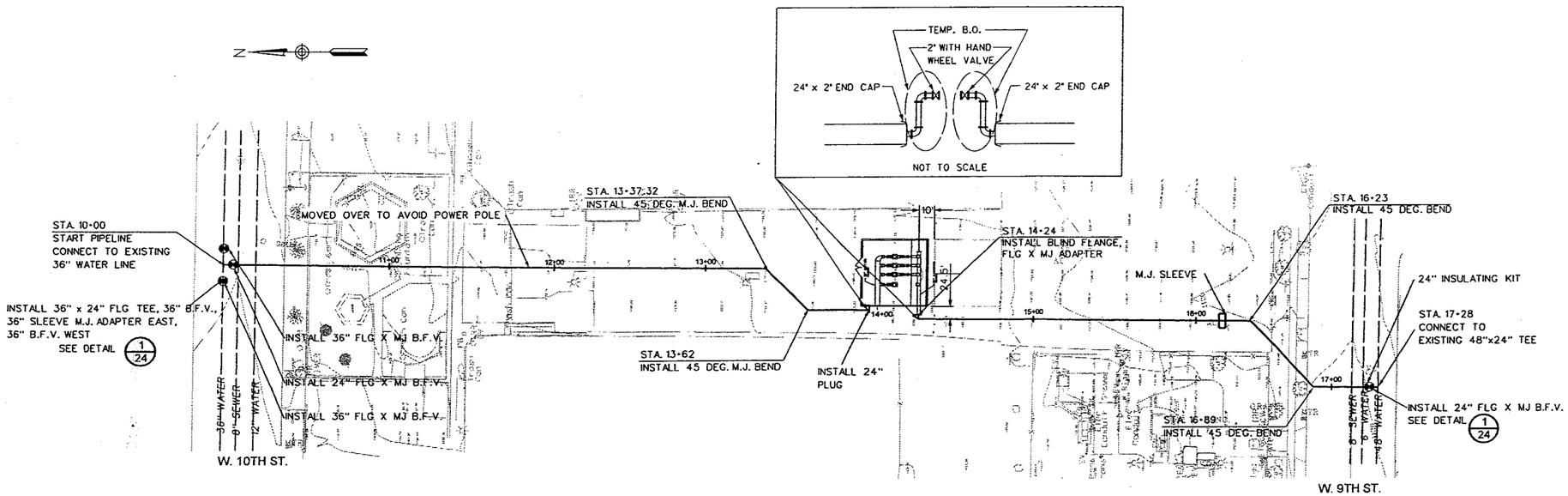

RECORD DRAWINGS

IF SHEET IS LESS THAN
22" x 34"
IT IS A REDUCED PRINT.
SCALE REDUCED ACCORDINGLY.

AMES\PIPELINES\ 19TH90 \ AS-BUILT \ 9PPS26.DGN SHEET 23 OF 26

FILE: T:\PROJ\MUSCO

NO.	DATE	DESCRIPTION	NO.	DATE	DESCRIPTION
1	6/03	RECORD DRAWINGS			

REVISIONS

DESIGNED BY: JB
DRAWN BY: JC
CHECKED BY: DHD

URS
2520 Venture Oaks Way, Suite 250
Sacramento, CA 95833-3200
TEL: (916) 679-2000
FAX: (916) 929-7263

JOB No. 41-F2501400

REGISTERED PROFESSIONAL ENGINEER
No. 34557
Dwayne K. Dietrichs
EXP. 5/31/03
CIVIL
STATE OF CALIFORNIA

MUSCOY OU REMEDIAL DESIGN
MUSCOY GROUNDWATER
CONTAMINATION SUPERFUND SITE

PLAN AND PROFILE
ENCANTO PARK PUMP STATION
STA. 10+00 TO STA. 17+28

Scale: | Date: 07/2002 | Dwg. No.: 23

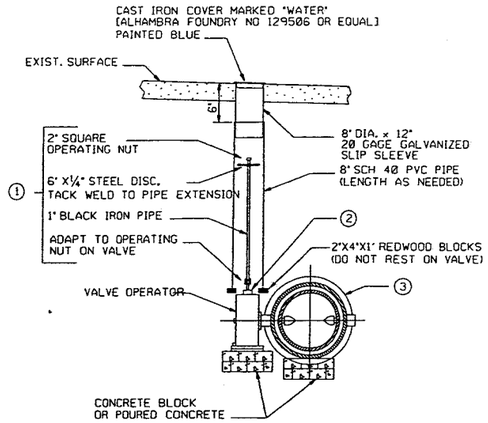

NOTE:

1. PROVIDE VALVE STEM EXTENSION AS SHOWN IF VALVE NUT BURY DEPTH EXCEEDS 5.0 FEET.
2. BACKFILL VALVE WITH SAND UP TO PACKING
3. VALVE SHALL BE A RUBBER SEATED BUTTERFLY VALVE FURNISHED WITH FLANGED ENDS, A CAST IRON BODY AND DISC, AND MOLDED RUBBER SEAT. THE INTERIOR SHALL BE CLASS 150 UNLESS OTHERWISE SPECIFIED AND SHALL CONFORM TO AWWA C504 SPECS.

1 TYPICAL BUTTERFLY VALVE INSTALLATION

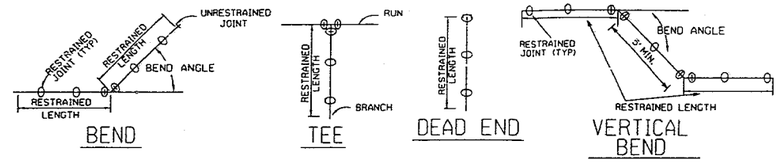

PIPE SIZE	11.25° BEND	22.5° BEND	45° BEND	90° BEND	TEE	DEAD END	VERTICAL BENDS 11.25° BEND UP	11.25° BEND DOWN	22.5° BEND UP	22.5° BEND DOWN	45° BEND UP	45° BEND DOWN
12"	4'	8'	17'	40'	52'	60'	4'	9'	8'	18'	17'	37'
16"	5'	10'	22'	52'	70'	78'	5'	11'	10'	23'	22'	48'
20"	6'	13'	26'	64'	88'	97'	6'	14'	13'	28'	26'	59'
24"	7'	15'	31'	75'	106'	115'	7'	17'	15'	33'	31'	69'
30"	9'	18'	38'	91'	132'	141'	9'	20'	18'	41'	38'	85'

NOTES:

1. USE THE FOLLOWING GUIDELINES WHEN OTHER PIPE JOINTS ARE WITHIN 10 FEET OF THE JOINT BEING RESTRAINED:
   - A) USE THE "DEAD END" LENGTH FOR CONNECTIONS TO ANY MATERIAL EXCEPT DUCTILE IRON AND CAST IRON.
   - B) USE THE "DEAD END" LENGTH WHEN ANOTHER PIPE JOINT IS WITHIN 10 FEET OF A BEND BEING RESTRAINED.
   - C) USE THE "90° BEND" LENGTH WHEN ANOTHER PIPE JOINT IS WITHIN 10 FEET OF A TEE BEING RESTRAINED.
2. DIVIDE RESTRAINED LENGTH BY 0.85 FOR SILTY SOIL.
3. THIS TABLE IS BASED ON THE ASSUMPTION THAT THE TRENCH IS BACKFILLED TO A MINIMUM DEPTH OF 5 FEET WITH A COHESIVE GRANULAR SOIL WHICH HAS BEEN LIGHTLY COMPACTED.
4. RESTRAINED LENGTH ON TEES ASSUMES THE SAME SIZE BRANCH AND RUN. TEES WHICH HAVE BRANCH DIAMETERS LESS THAN THE DIAMETER OF THE RUN MAY REQUIRE A SHORTER RESTRAINED LENGTH. JOINTS ON THE RUN WITHIN 4' OF THE TEE SHALL BE RESTRAINED.

2 RESTRAINED JOINT DETAIL

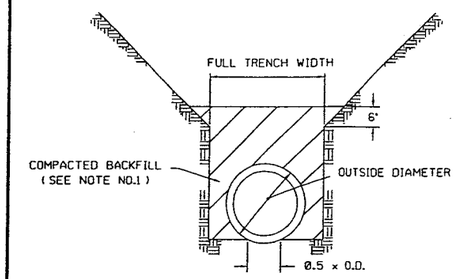

NOTES:

1. EARTH TO BE COMPACTED IN MAXIMUM OF 6" LIFTS.

3 RIGID PIPE BEDDING

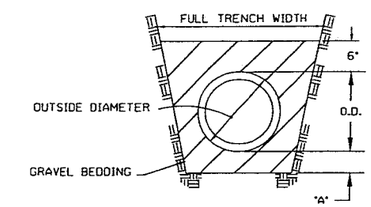

NOTES:

1. EARTH TO BE COMPACTED IN MAXIMUM OF 6" LIFTS.
2. "A"= 4" FOR PIPE WITH OUTSIDE DIAMETERS 27" AND SMALLER
   "A"= 6" FOR PIPE WITH OUTSIDE DIAMETERS 30" AND LARGER

4 FLEXIBLE PIPE BEDDING

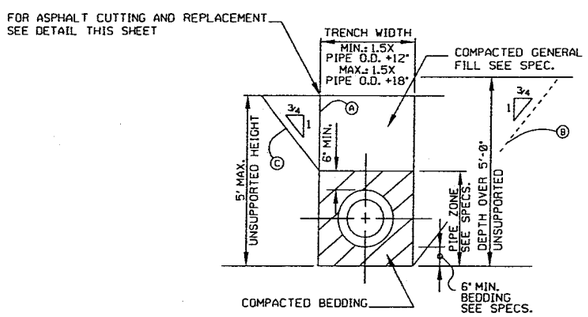

1. ALTERNATIVE TRENCH SECTIONS (A, B, AND C) ARE FOR USE ONLY WHERE STABLE, COMPACT SOIL CONDITIONS EXIST. WHERE BOULDERS OR LARGE CONSTRUCTIONS ARE ENCOUNTERED, THE TRENCH SECTIONS MAY BE WIDER & DEEPER THAN THAT SHOWN:
   - A. VERTICAL TRENCH WALLS - SECTION
     1. FOR DEPTHS UP TO 5 FEET, NO TRENCH SUPPORT IS REQUIRED.
     2. FOR DEPTHS EXCEEDING 5 FEET, SHORING OR SOLID SHEATHING IS REQUIRED.
   - B. SLOPING TRENCH WALLS - SECTION
     1. SLOPING TRENCH WALL SECTION SHALL NOT BE USED WITHOUT APPROVAL OF ENGINEER, UNLESS SPECIFICALLY DESIGNATED ON PLANS OR SPECIFICATIONS.
     2. EXCEPT AS APPROVED BY ENGINEER, UNSUPPORTED SLOPING TRENCH WALL SHALL NOT BE STEEPER THAN 3/4 HORIZ. TO 1 VERT. OR AS SHOWN IN SOILS REPORT WHICH SHALL CONTROL.
   - C. COMBINATION OF VERTICAL AND SLOPING TRENCH WALLS - SECTION
     1. TRENCH DEPTHS NOT EXCEEDING 5 FEET SHALL HAVE VERTICAL WALLS IN PIPE ZONE UNLESS OTHERWISE APPROVED, BY ENGINEER, OR WHERE SPECIFIED.
     2. FOR TRENCHES WITH COMBINED WALLS AND ANY DEPTH EXCEEDING 5 FEET, DESIGN CALCULATIONS BY A REGISTERED CIVIL ENGINEER AND APPORVAL BY GOVERNING AGENCY OF SUPPORTED METHODS ARE REQUIRED.
2. WHERE WET, UNSTABLE OR RUNNING SOIL IS ENCOUNTERED, SOLID SHEATING IS REQUIRED FOR ALL VETICAL TRENCH WALLS.
3. ASPHALT PAVEMENT SHALL BE A MINIMUM THICKNESS EQUAL TO THE EXISTING SECTION.
   NOTE: TRENCH SECTIONS SHOWN DO NOT DESIGNATE PAY LINES.

5 TYPICAL TRENCH SECTION

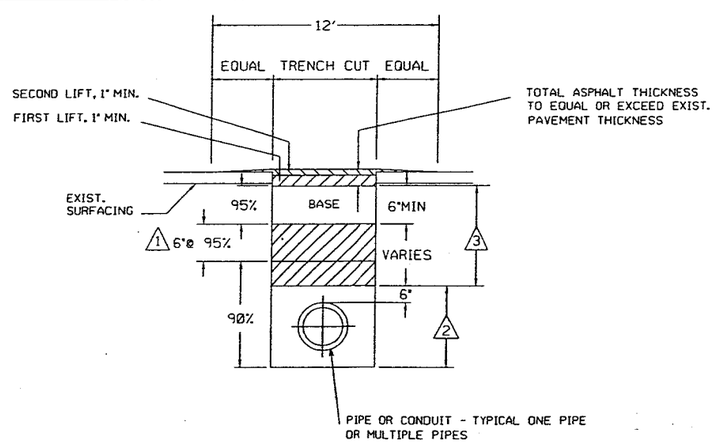

1. THE TOP 6" OF SUBGRADE SHALL BE COMPACTED TO 95% RELATIVE DENSITY.
2. SAND EQUIVALENT AND PERMEABILITY SHALL COMPLY WITH SPECIFICATIONS.
3. TRENCH BACKFILL SHALL BE PER STANDARD SPECIFICATION
4. ALL WORK AREA PROTECTION SHALL BE IN ACCORDANCE WITH THE STATE MANUAL OF TRAFFIC CONTROLS FOR CONSTRUCTION AND MAINTENANCE WORK ZONES.

6 ASPHALT PAVEMENT PATCHING DETAIL

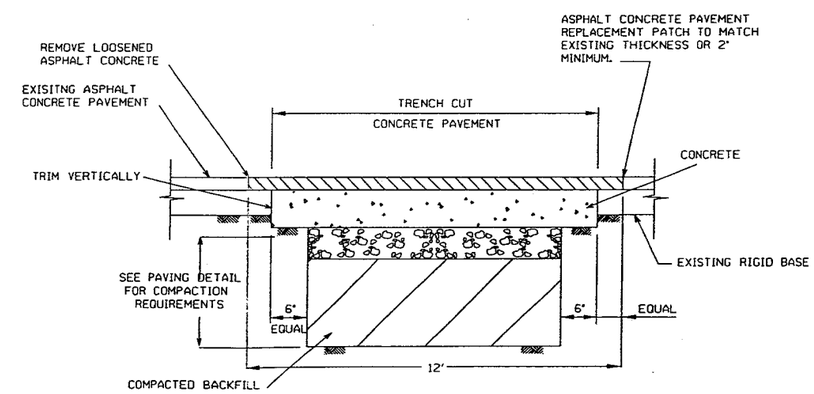

RECORD DRAWINGS

7 PAVEMENT PATCHING DETAIL
RIGID PAVEMENT WITH ASPHALTIC CONCRETE SURFACE

NO.	DATE	DESCRIPTION	NO.	DATE	DESCRIPTION
1	6/03	RECORD DRAWINGS			

REVISIONS

DESIGNED BY: JB
DRAWN BY: JC
CHECKED BY: DHD

URS
2520 Venture Oaks Way, Suite 250
Sacramento, CA 95833-3200
TEL: (916) 679-2000
FAX: (916) 928-7263

JOB No. 41-F2501400

MUSCOY OU REMEDIAL DESIGN
MUSCOY GROUNDWATER
CONTAMINATION SUPERFUND SITE

MISCELLANEOUS DETAILS

Scale: | Date: 12/01 | Dwg. No.: 24

FILE: T:\PROJ\MUSC \JAMES\PIPELINES\ 10TH90 \ AS-BUILT\ DET_1.DGN

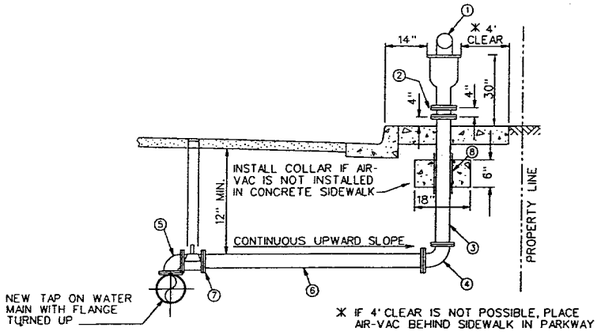

NOTE: PROVIDE ADEQUATE DRAINAGE FOR AIR VAC. IF ADEQUATE SURFACE DRAINAGE IS NOT PRACTICAL, USE A 2 CUBIC FOOT GRAVEL FILLED SEEPAGE PIT TO AVOID POSSIBLE DAMAGE CAUSED BY SURFACE WATER RUN OFF.

ITEM	QTY	DESCRIPTION
1	1 EA.	* " AIR VACUUM VALVE [COMBINATION HIGH PRESSURE AIR RELEASE AND VACUUM VALVE] DIRECT BLOW OFF TOWARD THE CURB USING GALVANIZED PIPING [CRISPIN, APCO, OR APPROVED EQUAL]
2	1 EA	* " FLANGED BREAKAWAY EXTENSION SPOOL. MORTAR LINED AND PAINTED TO MATCH AIR-VAC (INCLUDE HOLLOW BREAKAWAY BOLTS). FOR 3" AIR-VAC USE A 3" x 4" ADAPTOR SPOOL
3	____LF	* " SCH. 40 STEEL PIPE RISER. FOR 3" AIR VAC USE 4" PIPE
4	____LF	* " 90° DUCTILE IRON BEND (MJxFLG).
5	1 EA	* " 90° DUCTILE IRON BEND (FLGxPE).
6	____LF	* " PRESSURE CLASS 150 (THICKNESS CLASS 51) DUCTILE IRON PIPE WITH FIELD LOCK GASKETS
7	1 EA	* " MJ BUTTERFLY VALVE ASSEMBLY PER SBMWD STD. NO W3.2 WITH MEGALUG RETAINER RING
8	12 IN	10" FLEXIBLE VINYL SLEEVE

* MATCH SIZE OF VALVE INLET

1 — 3" AND LARGER COMBINATION AIR VACUUM AND RESEASE VALVE AND AIR VACUUM VALVE

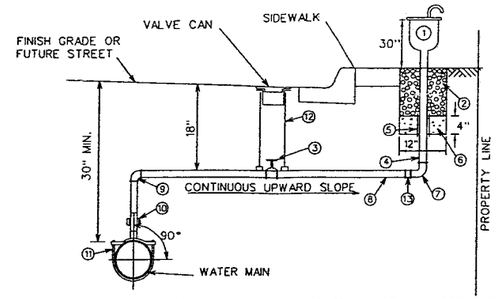

ITEM	QTY	DESCRIPTION
1	1 EA.	SELECT ONE OF THE FOLLOWING: A) 1" OR 2" AIR RELEASE VALVE - CRISPIN PL10A/PL20, APCO NO. 200A OR EQUAL; B) 2" AIR VACUUM VALVE - CRISPIN A20, APCO 144, OR EQUAL; C) 2" COMBINATION AIR AND VACUUM RELEASE VALVE - CRISPIN UNIVERSAL AIR RELEASE VALVE NO. U20, APCO NO. 145C, OR EQUAL
2	1.3 CU. FT.	3/4" POORLY GRADED GRAVEL
3	1 EA.	2" BRONZE WHEEL VALVE
4	24 IN.	2" THREADED GALVANIZED IRON PIPE
5	12 IN.	3" FLEXIBLE VINYL SLEEVE
6	0.3 CU. FT.	2,000 PSI CONCRETE
7	1 EA.	2" GALVANIZED QUARTER BEND (FEM PIPE THREAD)
8	__ L.F.	2" TYPE L HARD COPPER TUBING (SBMWD APPROVED U.S. MANUFACTURE)
9	1 EA.	2" BRASS COMPRESSION QUARTER BEND
10	1 EA.	2" BRONZE CORPORATION STOP MUELLER H15023 OR EQUAL
11	1 EA.	___" x 2" SERVICE SADDLE OR 2" WELD-ON THREAD-O-LET
12	2 EA.	VALVE CAN PER CITY STANDARD
13	1 EA.	INSOLATOR COUPLING (COMPRESSION x MALE PIPE THREAD)

2 — 2" AND SMALLER AIR RELEASE VALVE

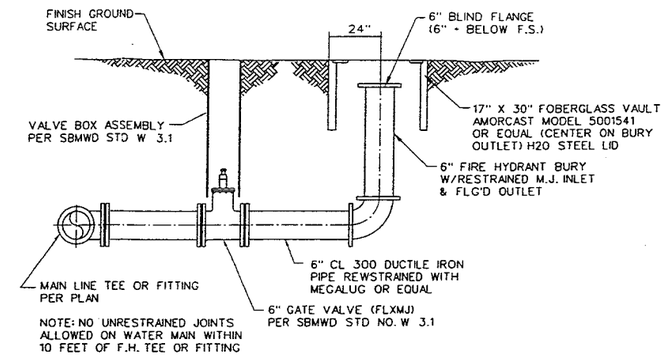

3 — BLOWOFF ASSEMBLY

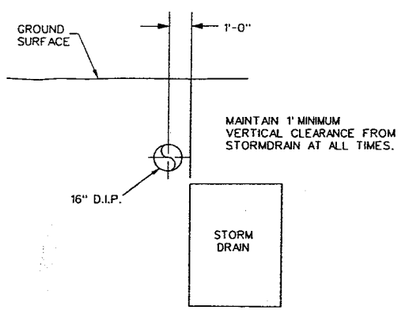

4/19A — "H" ST PIPELINE SECTION

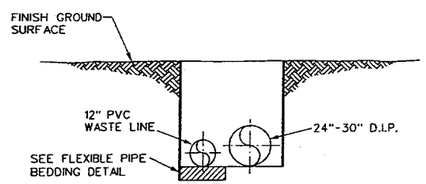

DUAL PIPE INSTALLATION

RECORD DRAWINGS

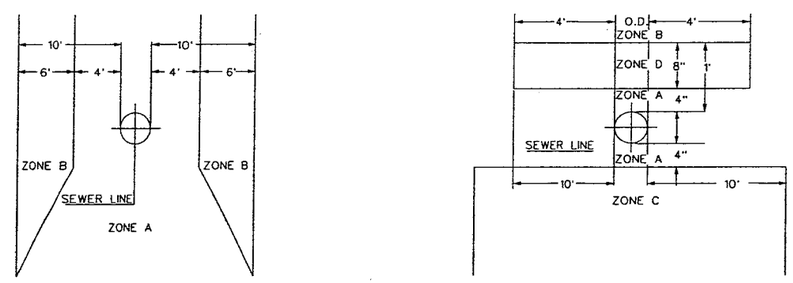

PARALLEL CONSTRUCTION

PERPENDICULAR CONSTRUCTION

ZONE	WATER LINE REQUIREMENTS
A	NO WATERLINE CONSTRUCTION ALLOWED
B	WATERLINE CONSTRUCTION ALLOWED
C	NO PIPE JOINTS ALLOWED.
D	NO PIPE JOINTS ALLOWED.

6 — SEWER MAIN CROSSING DETAIL

NO.	DATE	DESCRIPTION	NO.	DATE	DESCRIPTION
1	6/03	RECORD DRAWINGS			

REVISIONS

DESIGNED BY: JB
DRAWN BY: JC
CHECKED BY: DHD

URS
2520 Venture Oaks Way, Suite 250
Sacramento, CA 95833-3200
TEL: (916) 679-2000
FAX: (916) 929-7253

JOB No. 41-F2501400

REGISTERED PROFESSIONAL ENGINEER No. 34057 Eugene E. Swihart Exp. 3/31/03 CIVIL STATE OF CALIFORNIA

MUSCOY OU REMEDIAL DESIGN
MUSCOY GROUNDWATER
CONTAMINATION SUPERFUND SITE

MISCELLANEOUS DETAILS

Scale: | Date: 12/01 | Dwg. No.: 25

FILE: T:\PROJ\MUSCOY\JAMES\PIPELINES\19TH90\AS-BUILT\DET_2.DGN

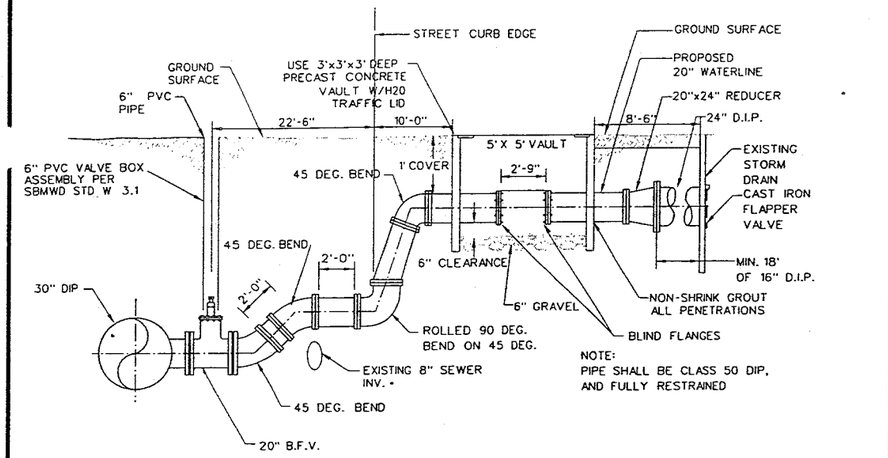

1/4 STORMDRAIN CONNECTION AT PENNSYLVANIA AND 16TH STREET

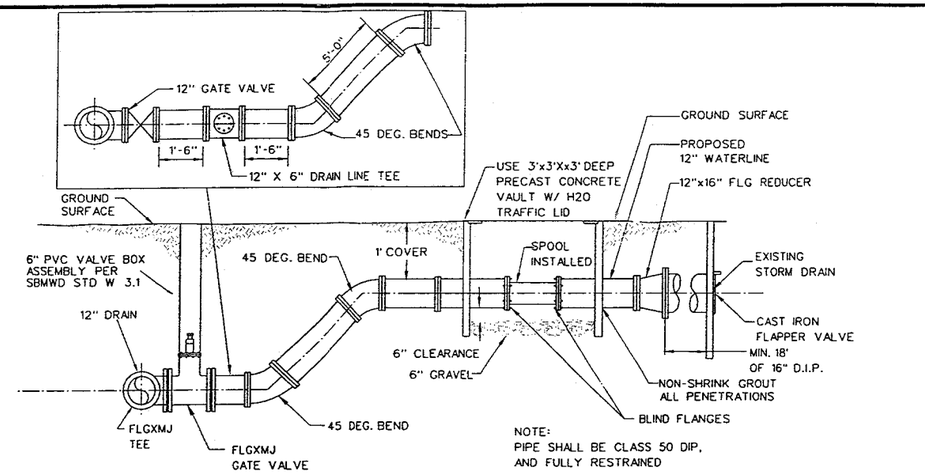

2/10 STORMDRAIN CONNECTION AT MT. VERNON STREET

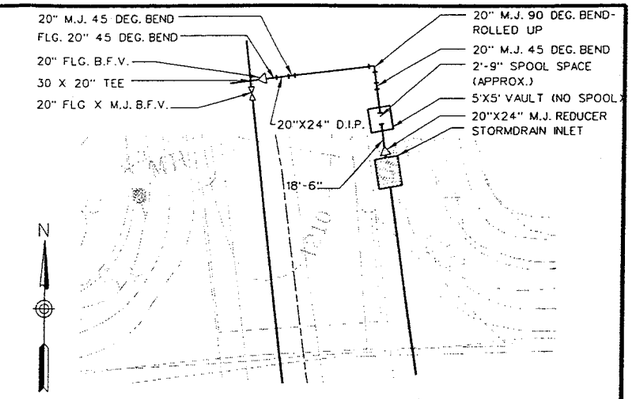

3/4 PLAN VIEW - STORM DRAIN CONNECTION AT 16TH AND PENNSYLVANIA AVENUE

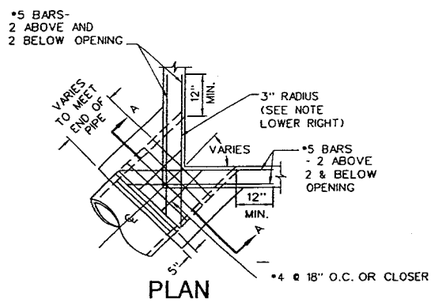

PLAN
CORNER CONNECTION

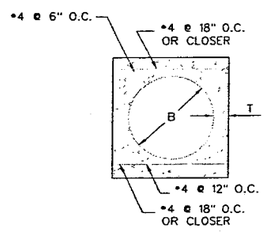

SECTION A-A

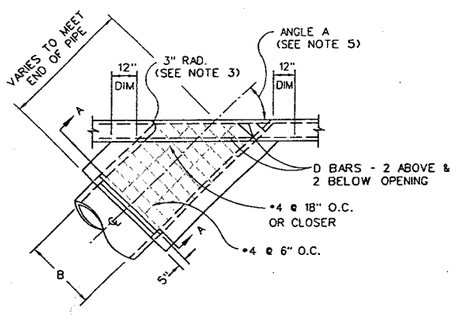

PLAN
SIDE CONNECTION

NOTES:

1 REINFORCING STEEL SHALL BE 1 1/2 " CLEAR FROM FACE OF CONCRETE UNLESS OTHERWISE SHOWN.

2 REINFORCING STEEL FOR INSIDE FACE OF CATCH BASIN WALL SHALL BE CUT AT CENTER OF OPENING AND BENT INTO WALLS OF MONOLITHIC CONNECTION. REINFORCING STEEL FOR OUTSIDE FACE OF CATCH BASIN WALL SHALL BE CUT 2" CLEAR OF OPENING.

3 CONNECTION SHALL BE POURED MONOLITHIC WITH CATCH BASIN. THE ROUNDED EDGE OF OUTLET SHALL BE CONSTRUCTED BY POURING CONCRETE AGAINST A CURVED FORM WITH A RADIUS OF 3".

4 FLOOR OF STRUCTURE SHALL BE STEEL TROWELED TO SPRING LINE.

5 CONNECTIONS SHALL BE CONSTRUCTED WHEN:
a) PIPES, 12" THRU 72" IN DIAMETER, INLET OR OUTLET THRU CORNER OF CATCH BASIN.
b) ANGLE A, FOR PIPES 24" THRU 30" IN DIAMETER, IS 70° OR LESS.
c) PIPES, 33" THRU 72" IN DIAMETER, INLET OR OUTLET THRU THE SIDE WALL OF CATCH BASIN.

NOTE:

IF CONNECTION TO STORMDRAIN IS PERPENDICULAR TO FACE OF STORMDRAIN, REINFORCING CONCRETE IS NOT REQUIRED. USE NON-SHRINKING GROUT TO FILL VOID BETWEEN PIPE AND STORMDRAIN DROP INLET.

B	T	C BARS	D & E	B	T	C BARS	D & E
12"		*4 @ 6" O.C.	*5	42"		*5 @ 6" O.C.	*6
15"				45"			
18"				48"			
21"				51"			
24"				54"			
27"				60"			
30"				63"			
32"				66"			
36"				69"			
39"				72"			

4/- CONNECTION TO STORMDRAIN DETAIL

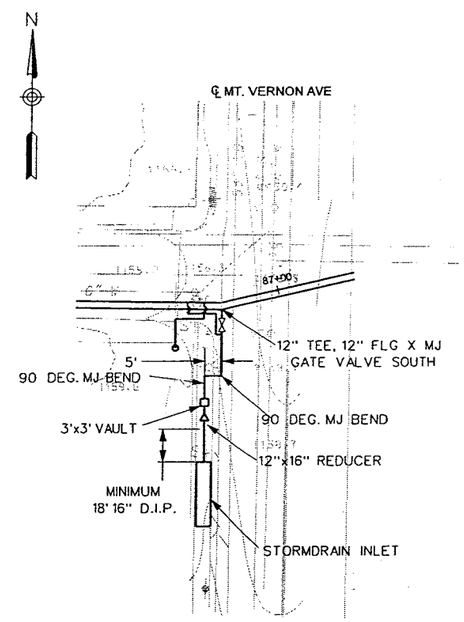

RECORD DRAWINGS

5/10 PLAN VIEW - STORMDRAIN CONNECTION AT MT. VERNON ST.

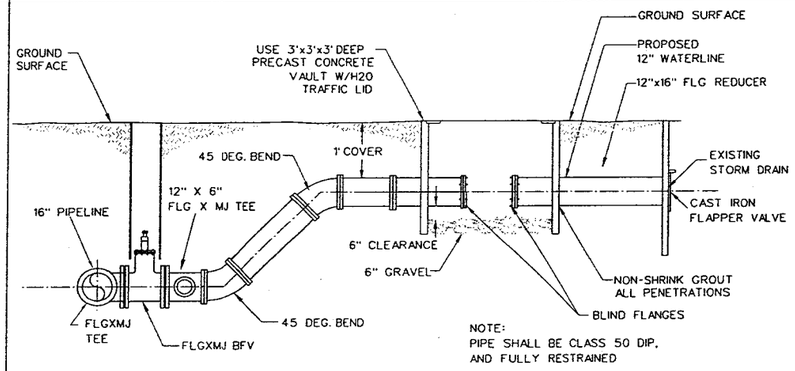

6/19B PROFILE VIEW - STORMDRAIN CONNECTION AT "H" ST.

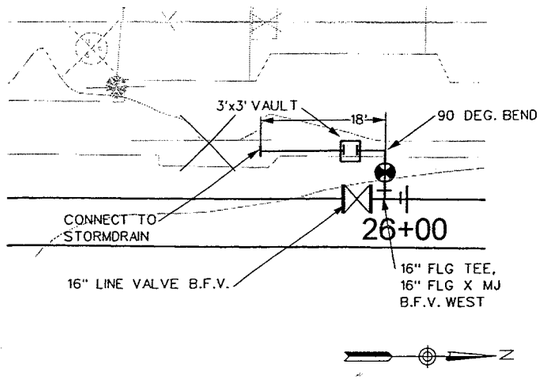

7/19B PLAN VIEW - STORMDRAIN CONNECTION AT "H" ST.

NO.	DATE	DESCRIPTION	NO.	DATE	DESCRIPTION
1	6/03	RECORD DRAWINGS			

REVISIONS

DESIGNED BY: JB
DRAWN BY: ETB
CHECKED BY: DHD

URS
2520 Venture Oaks Way, Suite 250
Sacramento, CA 95833-3200
TEL: (916) 929-2345
FAX: (916) 929-7263

JOB No. 41-F2501400

REGISTERED PROFESSIONAL ENGINEER No. 34637 Wayne R. Batchelor EXP. 9/30/02 CIVIL STATE OF CALIFORNIA

MUSCOY OU REMEDIAL DESIGN
MUSCOY GROUNDWATER
CONTAMINATION SUPERFUND SITE

MISCELLANEOUS DETAILS

Scale: NO SCALE | Date: 12/01 | Dwg. No.: 26

FILE: T:\PROJ\MUSCO JAMES\PIPELINES\ 19TH90 \ AS-BUILT \ 19SHT26DET.DGN