DEPARTMENT OF THE NAVY
SOUTHWEST DIVISION
NAVAL FACILITIES ENGINEERING COMMAND
1220 PACIFIC HIGHWAY
SAN DIEGO, CA 92132-5190

5090
Ser 06CH.KF/1593
December 23, 2003

Mr. Michael Work
U.S. Environmental Protection Agency
Region IX
75 Hawthorne Street, (SFD 8-3)
San Francisco, CA 94105-3901

Mr. Chein Kao
Department of Toxic Substances Control
700 Heinz Avenue, Bldg. F, Suite 200
Berkeley, CA 94710

Ms. Julie Menack
Regional Water Quality Control Board
San Francisco Bay Region
1515 Clay Street, Suite 1400
Oakland, CA 94612

Dear BCT Members:

Enclosure (1) is the Final Parcel E Nonstandard Data Gaps Investigation Landfill Gas Characterization, Hunters Point Shipyard. Also included in the report are the Responses to Regulatory Comments on the draft version of this document.

Should you have any concerns with this matter, please contact me at (619) 532-0913.

Sincerely,

KEITH FORMAN
BRAC Environmental Coordinator
By direction of the Commander

Enc: (1) Final Parcel E Nonstandard Data Gaps Investigation Landfill Gas Characterization, Hunters Point Shipyard, December 23, 2003

5090
Ser 06CH.KF/1593
December 23, 2003

Ms. Eileen Hughes
700 Heinz Avenue, Bldg. F, Suite 200
Berkeley, CA 94710

Ms. Amy Brownell
1390 Market Street, Suite 910
San Francisco, CA 94103

Ms. Dorinda Shipman
555 Montgomery St., Suite 1300
San Francisco, CA 94111

Mr. Marcos Getchell
Four Embarcadero Center, Suite 1700
San Francisco, CA 94111

Mr. Patrick Shea (Hard Copy Only)
Government Information Center,
100 Larkin Street, 5th Floor
San Francisco, CA 94102

Ms. Karla Brasaemle
90 New Montgomery Street, Suite 1010
San Francisco, CA 94105

Ms. Carol Allen
939 Ellis Street
San Francisco, CA 94109

Mr. Gino Yekta
1001 I Street, P.O. Box 4025
Sacramento, CA 95812

Mr. Keith Tisdell (Hard Copy Only)
613 LaSalle Avenue
San Francisco, CA 94124

Anna E. Waden Library (Hard Copy Only)
5075 Third Street
San Francisco, CA 94124

Copy to: (CD only)
Mr. Robert J. Hocker Jr.
49 Stevenson Street, Suite 525
San Francisco, CA 94105

Ms. Marie Harrison
4908 Third Street
San Francisco, CA 94124-2901

Mr. Lynne Brown
24 Harbor Road
San Francisco, CA 94124

Mr. Henry Louie
1390 Market Street, Suite 910
San Francisco, CA 94102

Mr. Gregg Olson
1155 Market Street, 4th Floor
San Francisco, CA 94103

Mr. Don Capobres
770 Golden Gate Avenue
San Francisco, CA 94102

Ms. Lea Loizos
833 Market Street, Suite 1107
San Francisco, CA 94103

Mr. Scott Sudweeks
1600 Clifton Road, MS E-56
Atlanta, GA 30333

Ms. Rona Sandler
City Hall, Room 234
1 Dr. Carlton B. Goodlett Place
San Francisco, CA 94102-4682

Ms. Jaque Forrest
155 Grand Avenue
Oakland, CA 94612

5090
Ser 06CH.KF/1593
December 23, 2003

Mr. William Ellsworth
345 Middlefield Road, MS 977
Menlo Park, CA 94024

Mr. Maurice Campbell
1100 Brussels Street
San Francisco, CA 94134

Mr. Doug Bielskis (w/o encl)
135 Main Street, Suite 1800
San Francisco, CA 94105

Mr. Gordon Hart
55 2nd Street, 24th Floor
San Francisco, CA 94105

Mr. Ronald Keichline (w/o encl)
1485 Bayshore Blvd., Suite 355
San Francisco, CA 94124

This public summary summarizes information presented in the document referred to below. Neither the document nor the public summary has been reviewed by the regulatory agencies.

Public Summary: **Final Parcel E Nonstandard Data Gaps Investigation**
Landfill Gas Characterization
Hunters Point Shipyard, San Francisco, California
December 23, 2003

This public summary document summarizes the "Final Parcel E Nonstandard Data Gaps Investigation, Landfill Gas Characterization, Hunters Point Shipyard, San Francisco, California." The U.S. Department of the Navy (Navy) initiated the Parcel E standard data gaps investigation to obtain data to support a revised remedial investigation RI, human health risk assessment HHRA, and feasibility study for Parcel E. Based on regulatory and community input and scheduling issues, the Parcel E data gaps investigation was conducted in two parts: the standard data gaps investigation and the nonstandard data gaps investigation. This summary discusses the landfill gas investigation portion of the nonstandard data gaps investigation only.

The primary objective of the landfill gas investigation is to characterize and delineate landfill gas at the Parcel E Industrial Landfill. As part of the investigation, ambient air and soil-gas surveys were conducted, and gas monitoring probes (GMP) were installed and monitored on a weekly and quarterly basis. Initial results of quarterly monitoring indicated high concentrations of methane in the area north of the landfill cap.

Under this investigation, 19 GMPs were monitored at the landfill from April to November 2002. Results from the April, May, and July 2002 sampling events indicated methane levels were above the lower explosive limit (LEL), or the methane concentration that could support combustion, in GMP01 through GMP12. These data correlate with the weekly monitoring data for April 2002 through September 2002. The GMPs that contained methane concentrations above the LEL are all located around the northern edge of the landfill at locations where combustible gases would be most likely to accumulate at this landfill.

In June 2002, GMP13 through GMP19 (along Crisp Avenue) were sampled, and no methane was detected. No methane has been detected in these GMPs during weekly monitoring, indicating that landfill gas has not migrated north of Crisp Avenue.

Since the landfill gas control system began operating in October 2002, the concentrations of methane at all of the GMPs have significantly decreased. All methane concentrations detected during the weekly monitoring decreased to below the LEL. Methane was detected in one sample above the LEL during the last quarter of sampling (November 2002) at GMP08A, which is located on the northeastern side of the landfill. The methane concentration at this location was 6.6 percent by volume. Although this detection was above the LEL, weekly monitoring data show that it has steadily decreased since the landfill gas control system was installed. The most recent methane reading at GMP08A was 1.6 percent by volume, below the LEL.

Nonmethane volatile organic compounds (VOC) were detected in gas samples collected during the quarterly sampling events. A screening evaluation was conducted to evaluate potential human health risks resulting from the low concentrations of VOCs detected in the GMPs located along Crisp Avenue. The evaluation concluded that nonmethane VOCs do not pose an unacceptable risk for human health to any houses that may be located along Crisp Avenue in the future.

Information Repositories: A complete copy of the "Final Parcel E Nonstandard Data Gaps Investigation, Landfill Gas Characterization, Hunters Point Shipyard, San Francisco, California" is available to members of the community at:

San Francisco Main Library
100 Larkin Street
Government Information Center, 5th Floor
San Francisco, CA 94102
Telephone: (415) 557-4500

Anna E. Waden Library
5075 Third Street
San Francisco, CA 94124
Telephone: (415) 715-4100

The report is also available to community members upon request to the Navy. For more information about environmental investigation and cleanup at Hunters Point Shipyard, contact Mr. Keith Forman of the Navy at (619) 532-0913 (telephone), (619) 532-0995 (fax), or mailto:formanks@efdsw.navfac.navy.mil (e-mail).

A-E CERCLA/RCRA/UST STUDIES AND REMEDIAL DESIGN

CONTRACT NUMBER N68711-00-D-0005

Parcel E
Nonstandard Data Gaps Investigation
Landfill Gas Characterization

Hunters Point Shipyard
San Francisco, California

DS.A057.10919

FINAL

December 23, 2003

Southwest Division
Naval Facilities Engineering Command
1220 Pacific Highway
San Diego, California 92132-5190

TETRA TECH, INC.

AECRU CONTRACT NUMBER N68711-00-D-0005
Delivery Order 057

Final
Parcel E Nonstandard Data Gaps Investigation

LANDFILL GAS CHARACTERIZATION

Hunters Point Shipyard, San Francisco, California

December 23, 2003

Prepared for

DEPARTMENT OF THE NAVY
Southwest Division
Naval Facilities Engineering Command
San Diego, California

Prepared by

TETRA TECH EM INC.
1230 Columbia Street, Suite 1000
San Diego, California 92101
(619) 525-7188

REGISTERED PROFESSIONAL ENGINEER
KEVIN BRICKNELL
58829
EXP. 6/30/03
CIVIL
STATE OF CALIFORNIA

Kevin Bricknell, Registered Civil Engineer, No. C058829

REGISTERED GEOLOGIST
VLADIMIR M. PRILEPIN
No. 7305
STATE OF CALIFORNIA

Vladimir Prilepin, Ph.D., Registered Geologist, No. 7305

DS.A057.10919

CONTENTS

ACRONYMS AND ABBREVIATIONS v

1.0 INTRODUCTION 1
- 1.1 REPORT SCOPE AND ORGANIZATION 1
- 1.2 SITE BACKGROUND 3
- 1.3 STRATIGRAPHY AND LITHOLOGY 5
  - 1.3.1 Artificial Fill (Qaf) 5
  - 1.3.2 Undifferentiated Upper Sand Deposits (Quus) 6
  - 1.3.3 Bay Mud Deposits (Qbm) 6
  - 1.3.4 Undifferentiated Sediment Deposits (Qu) 6
  - 1.3.5 Franciscan Complex Bedrock (Kf) 6
- 1.4 HYDROSTRATIGRAPHY 7
- 1.5 OBJECTIVES AND INVESTIGATION COMPONENTS 7

2.0 INVESTIGATION METHODS 8
- 2.1 AMBIENT AIR AND BUILDING ATMOSPHERE SURVEYS 9
- 2.2 SOIL-GAS SURVEY 11
- 2.3 INSTALLING AND MONITORING GAS MONITORING PROBES 12
  - 2.3.1 GMP01 through GMP12, GMP20, and GMP21 13
  - 2.3.2 GMP13 through GMP19 13

3.0 INVESTIGATION RESULTS 15
- 3.1 AMBIENT AIR AND BUILDING ATMOSPHERE SURVEYS 15
  - 3.1.1 Field Screening Results 15
  - 3.1.2 Laboratory Analytical Results 15
- 3.2 SOIL-GAS SURVEY 16
  - 3.2.1 Field Screening Results 16
  - 3.2.2 Laboratory Analytical Results 17
- 3.3 GAS MONITORING PROBE AND GROUNDWATER MONITORING WELL RESULTS 17
  - 3.3.1 Field Screening Results 17
  - 3.3.2 Laboratory Results for GMPs 17
  - 3.3.3 Laboratory Results for Groundwater Monitoring Wells 18

4.0 CONCLUSIONS 19
- 4.1 AMBIENT AIR SURVEYS 19
- 4.2 SOIL-GAS SURVEY 21

CONTENTS (Continued)

4.3 GAS MONITORING PROBE MONITORING 22
4.4 GROUNDWATER MONITORING WELLS MONITORING 23

5.0 REFERENCES 25

Appendix

A Soil Boring Logs

B Gas Monitoring Probe Construction Logs

C Quality Control Summary Report

D Evaluation of Vapor Intrusion Potential (Indoor Air Exposure Pathway) at Crisp Avenue and Parcel A

E Responses to Regulatory Agency Comments on the Draft Parcel E Nonstandard Data Gaps Investigation, Landfill Gas Characterization, Hunters Point Shipyard, San Francisco, California

FIGURES

1 Facility Location Map

2 Site Location Map

3 Cross-Section Location Map

4 Cross Section A-A’

5 Cross Section B-B’

6 Cross Section C-C’

7 Cross Section D-D’

8 Cross Section E-E’

9 Cross Section F-F’

10 A-Aquifer Mean Groundwater Elevations, Parcel E, May 24, 2002

11 Ambient Air Survey Locations

12 Temporary Soil-Gas Boring Locations

13 Landfill Gas Monitoring Locations (GMPs and Monitoring Wells)

14 Gas Control System Features

15 Methane Laboratory Data (April 2002 Soil-Gas Survey)

16 Total Nonmethane VOC Laboratory Data (April 2002 Soil-Gas Survey)

17 Time vs Concentration Results for Methane

18 GMP Quarterly Monitoring Results for Methane

19 Quarterly Methane Results for Monitoring Wells

TABLES

1 Analytical and Field Screening Methods

2 GMP Construction Specifications

3 Ambient Air Survey Field Screening Data

4 Laboratory Results for Ambient Air Survey at UCSF Light Pole and Building 830 Crawlspace

5 Soil-Gas Survey Field Screening Data

6 Summary of Soil-Gas Survey Nonmethane VOC Analytical Results

7 Soil-Gas Survey Laboratory Results

8 Weekly Gas Monitoring Field Screening Data

9 GMP Analytical Results

10 Comparison of Navy and EPA Split-Sample Analytical Results

11 Groundwater Monitoring Well Analytical Results

ACRONYMS AND ABBREVIATIONS

22 CCR	Title 27 of the California Code of Regulations
Bay	San Francisco Bay
bgs	Below ground surface
CGI	Combustible gas indicator
DO	Delivery Order
EPA	U.S. Environmental Protection Agency
FS	Feasibility study
FID	Flame ionization detector
FSP/QAPP	Field sampling plan and quality assurance project plan
GMP	Gas monitoring probe
HPS	Hunters Point Shipyard
IR	Installation Restoration
IT Corp.	International Technology Corporation
LEL	Lower explosive limit
Navy	U.S. Department of the Navy
PID	Photoionization detector
ppm	Parts per million
PRG	Preliminary remediation goal
RI	Remedial investigation
TCRA	Time-critical removal action
Tetra Tech	Tetra Tech EM Inc.
TO	Toxic organics
Triple A	Triple A Machine Shop, Inc.
UCSF	University of California, San Francisco
VOC	Volatile organic compound

1.0 INTRODUCTION

Under Indefinite Quantity Contract for Architectural–Engineering Services to Provide CERCLA/RCRA/UST Studies No. N68711-00-D-0005, DO 003 Tetra Tech EM Inc. (Tetra Tech) provides technical support to the U.S Department of the Navy (Navy), Naval Facilities Engineering Command, Southwest Division, at Parcel E of Hunters Point Shipyard (HPS) in San Francisco, California. Under DO 003, Tetra Tech characterized the migration of landfill gas at the Industrial Landfill in Parcel E (hereinafter referred to as the landfill) to support a revised remedial investigation (RI) and feasibility study (FS) for Parcel E. This report presents the findings of the landfill gas characterization. The Navy will incorporate the results of this evaluation into the revised Parcel E RI and FS reports.

The Navy has implemented RIs and FSs at HPS in San Francisco, California. In October 1997, the Navy submitted the draft final RI report for Parcel E (Tetra Tech and others 1997), and in January 1998, the Navy submitted the draft Parcel E FS (Tetra Tech 1998). During preparation of the RI and FS reports, the Navy, the regulatory agencies, and the project team identified supplementary information required to support the remedial design for Parcel E. The supplementary information was needed for the Parcel E Industrial Landfill (hereinafter referred to as the landfill) and a portion of Parcel E previously identified as wetlands. In spring 2002, the Navy conducted the nonstandard data gaps investigation to gather this supplementary information.

The report scope and organization, site background, stratigraphy and lithology, hydrostratigraphy, and objectives and investigation components are discussed below.

1.1 REPORT SCOPE AND ORGANIZATION

The Navy collected the data for this investigation in accordance with protocols set forth in the draft final field sampling plan and quality assurance project plan (FSP/QAPP) for the Parcel E nonstandard data gaps investigation (Tetra Tech 2002a) and the draft landfill gas technical memorandum (Tetra Tech 2002b).

The primary elements of the nonstandard data gaps investigation included the following:

1. Identify the concentration and lateral extent of landfill gas
2. Delineate the lateral extent of waste fill for the landfill area
3. Evaluate the potential for liquefaction in subsurface soils in areas surrounding the landfill
4. Define and delineate the extent of the wetlands and assess the functions and values of the wetlands

The Navy initially planned to include the investigation results as appendices to the revised Parcel E RI report. However, because of the regulatory and community interest in the information, the Navy will issue stand-alone documents for these investigations. This report presents the characterization and delineation of landfill gas.

After reviewing the results of the landfill gas investigation, the Navy conducted a removal action to remove methane gas and reduce concentrations to less than 5 percent by volume in the subsurface of the University of California, San Francisco (UCSF) compound north of the landfill. The removal action results will be presented in a closeout report anticipated to be issued in 2004. Landfill gas monitoring data collected from October 2002 to May 2003 also will be presented in the removal action closeout report.

This report contains the following sections:

- Section 1.0 – Introduction. Section 1.0 describes the report scope and organization, site background, subsurface conditions, and the objectives and investigation components.
- Section 2.0 – Investigation Methods. Section 2.0 discusses the investigation methods followed during the ambient air surveys, the soil-gas survey, and gas monitoring probe (GMP) installation and monitoring.
- Section 3.0 – Investigation Results. Section 3.0 provides the landfill gas investigation results.
- Section 4.0 – Conclusions. Section 4.0 summarizes the conclusions of the landfill gas investigation.
- Section 5.0 – References. Section 5.0 presents the references used to prepare this document.

Figures and tables are presented after Section 5.0. The following appendices were prepared and included as supplementary information to this report:

- Appendix A provides soil boring logs for all GMP locations.
- Appendix B provides the GMP construction logs.
- Appendix C contains the quality control summary report
- Appendix D presents the evaluation of vapor intrusion potential of volatile organic compounds (VOC) detected beneath Crisp Avenue
- Appendix E provides the responses to regulatory agency comments on the draft landfill gas characterization report

1.2 SITE BACKGROUND

HPS is located in southeast San Francisco on a peninsula that extends east into San Francisco Bay (Bay) and it is divided into six parcels (A through F) (Figure 1). Parcel E was established in April 1992. Parcel E occupies 173 acres of shoreline and lowland coast along the southwestern portion of HPS and is bounded by Parcel A to the north, Parcel D to the north and east, the Bay (Parcel F) to the east and south, and off-base property to the west. Parcel E has been used as a landfill and as a storage area for waste, construction, and industrial materials as well as for office and laboratory space for the Naval Radiological Defense Laboratory.

Nineteen Installation Restoration (IR) sites are within Parcel E. This landfill gas characterization report addresses two of those sites: IR-01 and IR-21. These sites have been grouped for the purpose of this investigation and will be referred to as IR-01/21.

IR-01/21 is located along the shoreline of HPS in the northwestern corner of Parcel E and covers 35 acres. No buildings are known to have existed on IR-01/21. The area is unpaved except in the northern portion, along the former alignment of Spear Avenue, and in the northeast, where a large area is covered with concrete. The rest of IR-01/21 consists of bare soil, an approximately 14.8-acre multilayer cap that covers part of the landfill, and seasonal vegetation.

The Parcel E shoreline is covered with riprap and assorted rubble, such as broken asphalt and bricks (Tetra Tech 2002c). The Navy disposed of construction debris, industrial waste, sandblast waste, domestic refuse, paints, and solvents in the landfill. The results of the landfill gas lateral extent investigation indicated that waste covers about 22 acres at the site (Tetra Tech 2003a).

During 1974 and 1975, the following measures were implemented in an effort to close the landfill:

- A storm water interceptor line was installed to divert storm water runoff from the hill area north of the landfill to an outfall
- A 1,000-foot-long dike of impervious clay was constructed along the shoreline of the landfill to minimize the flow of contaminated groundwater into the Bay
- A minimum of 2 feet of compacted, imported fill was placed on the landfill
- The entire site was graded to facilitate storm water drainage

IR-01/21 was affected by the operations of Triple A Machine Shop, Inc. (Triple A), which leased property at HPS from May 1976 to June 1986. Triple A operated a commercial ship repair facility and subleased portions of HPS to warehouse, industrial, and commercial firms. The San Francisco District Attorney's Office charged Triple A with illegally disposing of hazardous wastes at 19 locations throughout HPS; 15 of the locations were in Parcel E.

Triple A allegedly disposed of industrial debris, sandblast waste, and asphalt over 5 acres along the shoreline. Triple A also allegedly stored unlabeled, deteriorated, uncovered drums in the southeastern corner of IR-01/21; the contents of the drums were exposed to the elements. Further detail about Triple A sites and their designation can be found in California Department of Health Services' "Remedial Action Order, Docket No. HSA87/88-034RA" dated January 7, 1987.

In 1997, the Navy performed a removal action to prevent Poly Chlorinated Biphenyl-contaminated groundwater from migrating to San Francisco Bay (International Technology Corporation [IT Corp.] 1999). The removal action consisted of installing an 800-foot-long sheet pile barrier between the landfill and the Bay and a groundwater extraction system behind the barrier to prevent groundwater buildup (IT Corp. 1999). The sheet pile barrier consists of 410 sheet piles that vary in length from 12 to 55 feet. A groundwater extraction system was installed in December 1997 to prevent groundwater mounding behind the sheet pile barrier, along the southern portion of the landfill. The groundwater extraction system consists of a groundwater extraction trench and seven groundwater extraction wells installed on the landward side of the sheet pile barrier.

In August 2001, a fire occurred at the landfill, and an interim cap was completed in 2001 to cover the burn area. The interim cap is a multilayer cover that covers about 14.8 acres and ensures that any subsurface fire is smothered through oxygen depletion (Tetra Tech 2000). Figure 2 shows the location of the landfill, the areal extent of the landfill, and the boundary of the interim cap liner.

In September 2002, based on the preliminary results of the nonstandard data gaps investigation, the Navy issued the "Parcel E Landfill Gas Time-Critical Removal Action, Action Memorandum" (Tetra Tech 2002c). The purpose of the action memorandum was to document the Navy's decision to undertake a time-critical removal action (TCRA) of methane gas present in the subsurface near the Parcel E Industrial Landfill, IR-01/21.

In October 2002, the Navy conducted the TCRA at Parcel E. The primary goals of the TCRA were to prevent future landfill gas migration onto the UCSF compound and to reduce methane levels on the UCSF compound to below the lower explosive limit (LEL) (5 percent by volume in air) (Tetra Tech In Progress).

The Navy installed a landfill gas control system, consisting of an 80-mil high-density polyethylene barrier wall, with a horizontal collection pipe, and four passive vents to prevent future methane migration from the landfill. This system is operated in a passive manner, with vapor treatment units on each vent, to provide additional protection from landfill gas migration.

Additionally, the Navy installed a landfill gas extraction system, consisting of 10 extraction wells and 5 GMPs, on the UCSF compound to remove methane from beneath the compound. The information obtained from the GMPs is used to monitor reduction in methane levels beneath the UCSF compound.

The five GMPs (GMP22, GMP23, GMP24, GMP25, and GMP26) installed on the UCSF compound are between the GMPs along the site perimeter and the GMPs along Crisp Avenue. They were installed to monitor the progress of the removal action; however, they also provide intermediate monitoring points between the landfill limit and Crisp Avenue. GMP24, GMP25, and GMP26 are located near Building 830, which is currently used as a laboratory.

As part of the landfill gas investigation, the five GMPs installed on the UCSF compound and the GMPs discussed in Section 2.3 were included during weekly monitoring and sampling in the fourth quarter of November 2002.

1.3 STRATIGRAPHY AND LITHOLOGY

The stratigraphic sequence of the geologic units underlying the landfill area, from youngest (shallowest) to oldest (deepest), is as follows:

- Artificial Fill (Qaf)
- Undifferentiated Upper Sand Deposits (Quus)
- Bay Mud Deposits (Qbm)
- Undifferentiated Sedimentary Deposits (Qu)
- Franciscan Complex Bedrock (Kf)

The thickness of overburden sediments and fill above bedrock in the landfill area varies across the site and ranges from about 55 feet in the northwest to over 190 feet in the southeastern portion. Figure 3 presents the geologic cross-section locations, and Figures 4 through 9 present each geologic cross section, A-A' through F-F', respectively. Individual stratigraphic units and their relationships are described below.

1.3.1 Artificial Fill (Qaf)

The artificial fill (Qaf) has an irregular contact with the underlying units. The fill varies in composition, ranging from clay and sand to large boulders. At the landfill, the artificial fill consists primarily of debris and waste. The thickness of the artificial fill in the landfill area is up to 35 feet.

The artificial fill and waste in Parcel E consists of construction and demolition debris used for land reclamation and a range of waste materials deposited in the landfill. Construction and demolition debris is visible along the Parcel E shoreline and consists of riprap, broken concrete, asphalt, and bricks. In some areas, ballast sand and fill soil are mixed with the construction debris.

In addition to construction debris and demolition debris, the landfill contains industrial wastes, sandblast waste, domestic refuse, paints, and solvents. The landfill has an aerial extent of

22 acres, with a cover thickness of up to 7.5 feet. Waste ranges in thickness from 5 to 25 feet, and its bottom depth at the landfill ranges from 12 to 35 feet below ground surface (bgs) (Figures 4 through 9).

1.3.2 Undifferentiated Upper Sand Deposits (Quus)

The cross sections show a discontinuous undifferentiated upper sand unit present beneath the artificial fill in the central and the northern portion of the site. This unit, identified as undifferentiated upper sand (Quus), consists mostly of fine sand with occasional silty and clayey sands with marine shells. The undifferentiated upper sand ranges between 0 to 10 feet in thickness and generally overlies undifferentiated sediments or Bay Mud.

1.3.3 Bay Mud Deposits (Qbm)

Bay Mud is present across most of the landfill area and consists of sandy clay, clay, and lenses of clayey sand. Marine shells are generally found in the Bay Mud. The Bay Mud thickens to the south and is 15- to 25-feet thick near the shoreline at the southern end of the landfill area. The Bay Mud acts as an aquitard where it is sufficiently thick. The Bay Mud pinches out in the northern part of the site, where the fill lies directly on undifferentiated sediments. Elsewhere, the Bay Mud sequence directly overlies undifferentiated sediments.

1.3.4 Undifferentiated Sediment Deposits (Qu)

Undifferentiated sediments (Qu) consisting of stratified beds of sand, silty sand, sandy and silty clay, and clay are present beneath the Bay Mud or undifferentiated upper sand unit. These undifferentiated sediments also contain occasional stringers and lenses of sand and clay within larger bodies of clay and sand. The undifferentiated sediments unconformably overlie the Franciscan Complex bedrock, which is described in the following section. The thickness of the undifferentiated sediments ranges from 45 feet in the northern portion of the landfill area to over 170 feet in the southern portion.

1.3.5 Franciscan Complex Bedrock (Kf)

Bedrock beneath the fill material and unconsolidated sediments consists of an assemblage of serpentinite, interbedded shales and greywacke sandstones, and greenstone (altered basalt) with some chert that are part of the Jurassic-Cretaceous age Franciscan Formation. At HPS, this unit has been labeled the Franciscan Complex Bedrock (Kf). The bedrock unit has a distinctive green color and outcrops north of Parcel E along Crisp Avenue. The depth to bedrock ranges from about 55 feet in the northern portion of IR-01/21 to over 200 feet in the southern portion of the site (Tetra Tech 2003b). The serpentinite is moderately to deeply weathered in some places, and portions are weathered to residuum clay along outcrops and where formerly exposed to the Bay. Minor fracturing was observed in the bedrock outcrop north of Crisp Avenue. No major fractions, faults, or joint sets were noted along this outcrop.

1.4 HYDROSTRATIGRAPHY

The hydrostratigraphy of the landfill area consists of the A-aquifer and aquitard (except in the northern portion), the B-aquifer, and a bedrock water-bearing zone. In the northern portion of the landfill area, the A-and B- aquifers are interconnected; no aquitard or Bay Mud separates the artificial fill and undifferentiated upper sand from the undifferentiated sediments. The Bay Mud aquitard thickens away from the upland area in the northern portion of the landfill area and separates the A- and B-aquifers toward the south. Monitoring wells were installed across the site in the A- and B- aquifer zones.

Boring logs recorded for the GMPs installed along the western perimeter of the landfill indicate that similar fill material (clays, sandy clays, and clayey sands) exists west of the landfill (Appendix A). Groundwater is encountered at very shallow depths (less than 5 feet bgs) west of the landfill and is almost at ground surface along the drainage ditch west of the landfill (Figure 10).

1.5 OBJECTIVES AND INVESTIGATION COMPONENTS

The following objectives of the landfill gas investigation were identified in the data quality objectives presented in the FSP/QAPP (Tetra Tech 2002a):

- Establish the extent of lateral landfill gas migration
- Define the extent and composition of landfill gas (other than methane) that may cause air emissions

The following primary investigation components of the landfill gas investigation were identified in the FSP/QAPP (Tetra Tech 2002a) and performed during this investigation; these components were established to assess the extent of lateral landfill gas migration and the composition of landfill gas (other than methane) that may cause air emissions:

- **Ambient air monitoring** was conducted within 300 feet of the perimeter and on the surface of the landfill cap to detect methane and other combustible gas concentrations exceeding 1.25 percent by volume in air (25 percent of the LEL for methane)
- **Building atmosphere survey** was conducted inside buildings and subterranean structures (including utility vaults and manhole covers) within the following:
  - 300 feet of the landfill perimeter to detect methane and other combustible gas concentrations exceeding 1.25 percent by volume in air (25 percent of the LEL for methane)
  - 300 feet of the GMPs where methane concentrations equal or exceed 5 percent by volume in air (100 percent of the LEL)
  - 1,000 feet of the landfill where methane or other combustive gas concentrations exceed 1.25 percent by volume in air in any building located 300 feet from the landfill perimeter

- **A soil-gas survey** was conducted using temporary soil-gas probes placed around the perimeter of the landfill to detect the following:
  - Methane and other combustible gas concentrations exceeding 1.25 percent by volume in air (25 percent of the LEL for methane)
  - Nonmethane VOCs exceeding 5 parts per million (ppm) above background
- **Permanent GMPs were installed and monitored for methane concentrations** every month for 4 months (Section 2.3.1 of the FSP/QAPP [Tetra Tech 2002a]), including the following:
  - Three critical predetermined locations identified in the FSP/QAPP (Tetra Tech 2002a)
  - Final soil-gas survey step-out locations where methane and other combustible gases exceeded 1.25 percent by volume in air
- **Follow-up monitoring of methane at all GMPs** was conducted using a combustible gas indicator (CGI) (GT series portable gas monitor) or GEM 2000, a flame ionization detector (FID), a photoionization detector (PID), and a water level meter for four quarters, or until a trend in methane and/or nonmethane VOC concentrations could be established (Table 3 of the FSP/QAPP)[Tetra Tech 2002a])
- **Laboratory analysis (U.S. Environmental Protection Agency [EPA] Methods Toxic Organics [TO]-14A, 25C, and 3C [EPA 2000])** of all samples for landfill gas (including gas other than methane) at the following:
  - Locations where methane and other combustible gases exceeded 1.25 percent by volume in air (25 percent of the LEL for methane) during ambient air or soil-gas surveys
  - Locations where concentrations of nonmethane VOC exceeded 5 ppm above background in samples from soil-gas survey temporary probes
  - Newly installed GMPs or, if no methane was detected, at two locations at the northern edge of the landfill near topographically high areas close to borings that exhibited high methane readings
  - Monitoring well IR01MW16A and the headspace of other existing monitoring wells located within waste where the screen interval extends above the water table
  - Any location inside buildings or structures within 300 feet of the landfill where combustible gases exceeded 25 percent of the LEL; these samples are identified as confirmation samples in Table 3 of the FSP/QAPP (Tetra Tech 2002a).

2.0 INVESTIGATION METHODS

This section details the ambient air and building atmosphere surveys, the soil-gas survey, and installation and monitoring of GMPs during the landfill gas characterization. Since the landfill stopped receiving waste before October 9, 1991, and it is being regulated under the

Comprehensive Environmental Response, Compensation, and Liability Act process, the substantive portions of the landfill gas monitoring and control requirements described in Title 27 of the *California Code of Regulation* (27 CCR), Sections 20921 through 20937, will be considered as potential applicable or relevant and appropriate requirements. The substantive portions of the landfill gas monitoring and control standards in 27 CCR were used as a reference for the procedures outlined in the following sections.

As required by 27 CCR, methane gas was used as an indicator of landfill gas at the site. Landfill gas may contain several constituents, including carbon dioxide, methane, and other VOCs. Methane is usually the primary constituent of concern for lateral migration because a potential exists for explosions in areas where methane collects and an ignition source is present. During previous investigations at the landfill, high levels of methane were reported in several of the borings that were completed in the waste near the northern edge of the landfill. Table 1 summarizes the analytical and field screening methods used during the landfill characterization.

2.1 AMBIENT AIR AND BUILDING ATMOSPHERE SURVEYS

The ambient air and building atmosphere surveys were designed to assess whether methane was present in ambient air within 300 feet of the landfill and in buildings or subterranean structures at concentrations exceeding 1.25 percent volume in air (25 percent of the LEL). Figure 11 shows the specific ambient air survey locations.

According to 27 CCR, concentrations of methane gas generated by a landfill must not exceed 25 percent of the LEL or 1.25 percent by volume within on-site structures. 27 CCR also requires that all underground structures, including basements, vaults, manholes, utility conduits, and gravity pipelines, in the area of potential migration be sampled for methane using either an explosimeter, a CGI, or an organic vapor analyzer calibrated to methane. Ambient air surveys focused on typical areas of concern for build-up of potentially explosive concentrations of methane, such as the perimeter of the landfill cap, wells, cracks along floors, edges of foundations, basements, and along the ground surface.

In accordance with the FSP/QAPP (Tetra Tech 2002a), the Navy conducted the ambient air surveys at accessible locations within 300 feet of the perimeter of the landfill. Because methane was not detected in structures near the 300-foot perimeter, the survey perimeter was not extended to 1,000 feet.

Ambient air surveys were conducted at the following locations at the landfill:

- Entire perimeter of the landfill cap
- Four transects across the landfill cap
- Nineteen groundwater monitoring wells (just outside the well, at the lip of the well cap, and inside the well)

- Nineteen subterranean structures
- One vault
- One electrical substation

In addition, the Navy surveyed nearby structures within 300 feet of the GMPs where methane concentrations equaled or exceeded 5 percent by volume in air (100 percent of the LEL) (Tetra Tech 2002a). Methane was detected above 5 percent by volume in air at GMPs along the northern side of the landfill (further discussed in Section 4.3). The Navy extended the ambient air and building atmosphere survey to include accessible buildings. These structures included Buildings 808, 809, 810, and 815, which are outside the 300-foot perimeter. Abandoned kennels and storage trailers north of the landfill also were surveyed; these locations are shown on Figure 11 as unlabeled structures west of Building 830. Building 820 was not surveyed because it is located on private property, and the property owner denied access to the building's interior and exterior perimeter. Because Buildings 816 and 817A are sealed, access during the field investigation was not possible, and the building interiors were not surveyed. The immediate areas surrounding Buildings 816 and 817A, including the building-to-ground interface, holes in the walls, and nearby vaults, were surveyed.

Using 27 CCR and the "Landfill Gas Monitoring Procedures, Section II.A.4" as guidance (California Integrated Waste Management Board 1997), field personnel conducted the ambient air surveys using a CGI (GT series portable gas monitor). The CGI used during the investigation measures oxygen, carbon dioxide, LEL, and concentrations of organic vapors in ppm by volume. The Navy also measured nonmethane VOCs during the ambient air surveys using a FID or PID. Because a CGI contains a thermo-conductivity sensor, the reading includes all combustible gases, not just methane. During the investigation, methane was detected at some locations at concentrations that exceeded the range of the CGI and FID. The Navy later substituted the CGI with a methane meter (GEM 2000) that could accurately measure methane at concentrations up to 100 percent by volume. The GEM 2000 is an infrared analyzer that provides accurate measurements of methane. All locations with sustained methane readings of greater than 25 percent of the LEL were recorded in the logbook. Table 1 lists the methods and instruments used during the ambient air surveys.

The FSP/QAPP indicated that, if methane was detected within a building at concentrations exceeding 25 percent of the LEL, a confirmation gas sample should be collected in a Summa canister (Tetra Tech 2002a). No methane detections exceeded 25 percent of the LEL within any building. However, the Navy collected confirmatory gas samples within the crawlspace of Building 830 because high methane levels were detected in the subsurface adjacent to the building. Confirmatory gas samples also were collected at a light pole near the southwest corner of the UCSF compound (Figure 11). Gas samples were submitted to a laboratory for methane analysis using EPA methods 3C and 25C (EPA 2000).

2.2 SOIL-GAS SURVEY

The Navy conducted the soil-gas survey around the perimeter of the landfill and at step-out locations to characterize the nature and horizontal extent of gas at the landfill. Figure 12 shows the temporary soil-gas boring locations.

The soil-gas survey was conducted around the perimeter of the landfill using direct-push soil-gas sampling equipment, a field methane meter (GEM 2000), and a PID. The Navy used a PID (Thermo OVM 580B with a 10.6 electron-volt lamp) to screen for nonmethane VOCs in the field and reduce the interference due to methane; this PID was used because the ionization potential for methane is 12.48 electron volts. Soil-gas samples were collected along the northern, northwestern, and eastern boundary of the landfill at 150-foot intervals or closer, depending on existing site features. The nearest inhabited buildings form the northern edge of the survey area. The existing Navy property line (and buildings located to the west) forms the northwestern edge, and the eastern edge is beside other areas of fill within Parcel E.

Soil-gas samples were planned to be collected at approximately 300-foot intervals along the southwestern boundary of the landfill. Because the landfill waste extends close to the shoreline in this area, access limitations did not permit sampling at this frequency along the southwestern boundary (Figure 12).

Gregg Drilling performed the subsurface drilling during the soil-gas survey; a geologist registered in the state of California supervised the drilling. An initial soil boring was advanced at each location to the depth of groundwater to select the depths for soil-gas sampling. The geology at each initial soil boring location was logged to identify any silt, sand, or gravel layer that might provide a conduit for gas migration. In accordance with the FSP/QAPP (Tetra Tech 2002a), a minimum of one and a maximum of two sample depths were chosen at each soil-gas sampling location, depending on the depth to groundwater. For locations where the depth to groundwater was shallower than 10 feet bgs, one soil-gas sample was collected from directly above the water table. For locations where the depth to groundwater was greater than 10 feet bgs, one sample was collected in any dry silt, sand, or gravel layer, or at about one-half the depth to groundwater if no such layer was identified. Concentrations of methane and total nonmethane VOCs in the soil-gas were measured by advancing a new boring immediately adjacent to (about 1 foot away from) the initial boring and by extracting a soil-gas sample from the desired depth(s) for measurement using the field meters.

Step-out borings were advanced if concentrations of methane were detected above 1.25 percent methane in air (25 percent of the LEL). During the initial soil-gas survey, high levels of methane were detected at various locations. Because of these detections, the Navy modified the field procedures to include additional step-out locations. Step-out borings were then advanced to delineate the lateral extent of methane above the lower quantitation limit of the instrument (0.5 percent of the LEL). Step-out borings were located between 20 and 50 feet out (away from the landfill) from the initial locations (Figure 12).

In addition to the field measurements, soil-gas samples were collected at locations where methane readings exceeded 25 percent of the LEL or nonmethane VOC readings exceeded 5 ppm above background to verify the field readings and determine the various gas constituents. Soil-gas samples were collected in Summa canisters for laboratory analysis of methane and nonmethane VOCs using EPA methods TO-14A, 3C, and 25C in accordance with the FSP/QAPP (Tetra Tech 2002a). Additional soil-gas samples were collected to confirm that the limit of methane detection had been accurately delineated by field measurements.

2.3 INSTALLING AND MONITORING GAS MONITORING PROBES

As a supplemental document to the FSP/QAPP (Tetra Tech 2002a), the Navy submitted a work plan for the installation of GMPs. The work plan was included as an appendix to the landfill gas technical memorandum (Tetra Tech 2002b). The overall approach to and goals of installing the GMP network presented in the work plan were consistent with the FSP/QAPP. However, because of access restrictions and high subterranean methane concentrations encountered during the soil-gas survey, the Navy determined that additional clarification of the GMP locations was necessary.

Each GMP was constructed using 0.75-inch threaded polyvinyl chloride pipe and 0.010-slot screen with a sealed top, a valve, and a quick-connect fitting for pressure measurements and gas sampling. Table 2 lists the GMP construction specifications. As a result of the shallow depth to groundwater in all areas at the site, sufficient space was unavailable for multiple depth completions; therefore, a single screened section was installed at each GMP (Table 2). The probe screens were installed to the depth of groundwater. Gregg Drilling installed the GMPs using a hollow-stem auger drilling rig; the installation was supervised by a geologist registered by the state of California.

The FSP/QAPP indicated that monthly monitoring of methane concentrations would be performed for the first 4 months at all permanent GMPs (Tetra Tech 2002a). However, the Navy increased this frequency and performed weekly field measurements for methane, nonmethane VOCs, barometric pressure, probe pressure, and probe temperature at each GMP.

Thereafter, the Navy performed quarterly monitoring at all GMPs using a GEM 2000, PID, and water level meter. Quarterly monitoring was performed from April to November 2002. The following were collected during each quarterly monitoring event:

- Field measurements at each GMP and four monitoring wells (IR01MW366A, IR01MW16A, IR01MW18A, and IR01MWI-5) using a GEM 2000 (to record percent methane, percent carbon dioxide, percent oxygen and percent LEL), a PID (to record nonmethane VOCs), and a water level meter

- Soil-gas samples for laboratory analysis of methane and nonmethane VOCs using EPA methods TO-14A, 3C, and 25C

Soil-gas samples were submitted in Summa canisters to the laboratory for analysis in accordance with the FSP/QAPP (Tetra Tech 2002a).

Appendices A and B include the logs that detail the lithology and construction of each boring and GMP, respectively. The sections below provide the rationale for the final GMP locations.

2.3.1 GMP01 through GMP12, GMP20, and GMP21

After the initial soil-gas survey was completed in April 2002 (Tetra Tech 2002b), field personnel installed 12 GMPs (GMP01 through GMP12) along the IR-01/21 perimeter, inside the fence line, and along the landfill's northern perimeter (Figure 13). These GMPs were installed at locations where methane exceeded 1.25 percent by volume in air.

In June 2002, the Navy installed GMP20 and GMP21 along the western boundary of the landfill, southwest of existing probe GMP10, to provide additional data about possible landfill gas migration west of the landfill, an area adjacent to non-Navy property. These GMPs were installed in areas where methane was not detected above the lower quantitation limit of the instrument (0.5 percent of the LEL) during the temporary soil-gas investigation. Groundwater in this area is extremely shallow (less than 5 feet bgs); therefore, the surface seal was modified to allow screening above the water table.

Subsequently, GMP01 through GMP08 and GMP11 were removed during the installation of the landfill gas barrier wall system (Figure 14) in August 2002. Replacement GMPs (GMP01A through GMP08A and GMP11A) were installed during construction activities for the barrier wall and were completed in September 2002. Two GMPs, GMP05A and GMP06A, were damaged when the barrier wall was installed. These GMPs were subsequently replaced in November 2002 with GMP05B and GMP06B. Figure 13 shows all of the former and current GMP locations.

2.3.2 GMP13 through GMP19

In May 2002, the Navy installed seven additional GMPs to provide more data on the extent of landfill gas migration.

The additional GMPs serve the following two purposes:

1. Provide monitoring locations north of the defined extent of landfill gas to make certain that methane is detected before it migrates across Crisp Avenue

2. Investigate the possibility that utility trenches provide preferential pathways for landfill gas migration

The Navy selected these GMP locations based on the results of the soil-gas survey conducted in April 2002 (Tetra Tech 2002b) and a detailed review of the site geology and existing utility drawings.

Based on the results of the soil-gas survey conducted in April 2002, all of the GMPs along Crisp Avenue are located north of any soil-gas survey points that detected methane (Figure 15).

A review of soil boring logs indicates that a continuous transmissive soil layer is not present under the UCSF compound and Crisp Avenue because of the heterogeneous fill used in the area (Appendices A and B). Utility drawings of the area also were studied to identify any utility corridors that might provide a preferential path for gas migration (Tetra Tech 2002b). The review indicated that several utilities run parallel to Crisp Avenue, including two 24-inch-diameter storm sewers (Figure 13), and a number of smaller utilities might cross Crisp Avenue.

The following smaller utility lines may cross the street and tie in to the main lines on the north side of Crisp Avenue:

- Existing lines leaving the north side of Building 830 on the UCSF compound
- Several abandoned storm water lines that may run north from the present waste areas toward Crisp Avenue; although these storm lines may have been removed or abandoned in place, the trench backfill may have been left in place, providing a potential gas migration pathway

Based on the review of the utility lines, the Navy installed the GMPs within the trench backfill of existing and potentially abandoned storm water lines as discussed below.

GMP13, GMP15, GMP18, and GMP19 were installed within existing utility trenches crossing Crisp Avenue to investigate the potential for landfill gas to migrate northward along the utility lines. These GMPs are either within north-trending utility trenches that terminate near the waste fill or within the southernmost east-west-trending utility trench along Crisp Avenue. For these GMPs, the borehole was advanced to intersect the trench backfill and drilled to at least the depth of the utility. The GMPs were screened beginning from about 6 feet bgs and extending down through the depth of the utility trenches to monitor any preferential pathways within the trench. When it was not possible to identify the bottom of the trench during drilling, the GMPs were completed immediately above groundwater (about 10 to 12 feet bgs). Because of the shallow depth of the utility trench in which GMP19 was installed, this probe was screened from 4.5 to 5.5 feet bgs. Figure 6 presents a geologic cross section along Crisp Avenue.

GMP14, GMP16, and GMP17 were installed south of the southernmost east-west-trending 24-inch-diameter storm sewer utility trench along Crisp Avenue. These GMPs were screened immediately above groundwater to investigate whether landfill gases had migrated into that zone. Groundwater ranges from 9.5 to 13 feet bgs along Crisp Avenue (Figure 6) and can vary about 2 feet because of seasonal variations.

3.0 INVESTIGATION RESULTS

This section provides the results of the ambient air and building atmosphere surveys, the soil-gas survey, and GMP monitoring.

3.1 AMBIENT AIR AND BUILDING ATMOSPHERE SURVEYS

This section presents the field screening results and the laboratory analytical results for the ambient air and building atmosphere surveys.

3.1.1 Field Screening Results

Within the landfill area, field measurements indicated that combustible gases were not detected within the ambient air breathing zone at any surveyed location (Table 3). However, combustible gases were detected around monitoring wells IR01MW18A and IR01MW38A and near Vault A.

During the ambient air survey, combustible gases were detected at the following locations outside the landfill area :

- The light pole located on the UCSF compound at levels equal to or above the LEL (Figure 11)
- Two locations along the fence between the landfill and the UCSF compound and at location B near a building within the UCSF compound at levels less than 100 percent of the LEL (5 to 37 percent of the LEL)

All four of these locations are adjacent to the utility trench that runs along the fence line to the light pole in the western corner of the UCSF compound.

Methane was not detected during the building atmosphere survey except at the Building 830 crawlspace, outside of the landfill. Methane was detected within the Building 830 crawlspace in four samples at a maximum concentration of 580 ppm or about 1 percent of the LEL (Table 3).

3.1.2 Laboratory Analytical Results

Outside the landfill area, seven air samples were collected to confirm the field survey results: three atmospheric-air samples at the light pole and four building atmosphere samples at the Building 830 crawlspace. Laboratory analysis of the samples indicated that trace amounts of methane were detected at both locations. Methane was detected in one out of the three light pole samples at a concentration of 300 ppm or 0.6 percent of the LEL. Table 4 summarizes the analytical results for the light pole and Building 830 crawlspace locations.

Fourteen nonmethane VOCs were detected at the light pole and compared with EPA Region 9 preliminary remediation goals (PRG) for ambient air (EPA 2002). Of the detected nonmethane VOCs, the following six VOCs were detected at concentrations above their respective PRGs:

- 1,1,2,2-Tetrachloroethane
- 1,3,5-Trimethylbenzene
- Benzene
- Chloromethane
- Ethylbenzene
- Tetrachloroethene

No VOCs were detected above PRGs in samples collected on November 13, 2002, after extraction had begun on the UCSF compound (Table 4).

Twelve nonmethane VOCs were detected in the Building 830 crawlspace and compared with EPA Region 9 PRGs (EPA 2002). Only benzene, chloromethane, and tetrachloroethane were detected at concentrations above their respective PRGs (Table 4). Nonmethane VOCs were not detected above PRGs in the most recent sample collected in Building 830 on November 13, 2002.

The laboratory achieved the lowest practicable detection limits for ambient air samples given the applied methodology, the broad list of target compounds established for the investigation, and the nature of the samples; however, several nonmethane VOCs still had detection limits above PRGs (Table 4).

3.2 SOIL-GAS SURVEY

This section presents the field screening results and the laboratory analytical results for the soil-gas survey.

3.2.1 Field Screening Results

From March 25 through April 5, 2002, field personnel collected 92 field screening samples by advancing temporary soil-gas borings at 22 locations around the perimeter of the site and at 34 step-out locations (Figure 12). Field screening results indicated the following:

- Methane was present in the subsurface at concentrations greater than 100 percent of the LEL (the regulatory limit for soil-gas at the site boundary) in 40 of 92 soil-gas screening samples.

- Nonmethane VOCs were recorded at a concentration of greater than 5 ppm above background in 11 of 92 soil-gas screening samples.

Table 5 presents all field screening results for the soil-gas survey.

3.2.2 Laboratory Analytical Results

Field personnel collected 61 soil-gas samples from 39 temporary soil-gas locations and submitted the samples to the laboratory for analysis (EPA 2000). One sample, collected from location SG02, was damaged during shipping and was rejected for laboratory analysis. Laboratory analytical results indicated that methane was present in the subsurface at concentrations greater than 100 percent of the LEL in 38 of 61 soil-gas samples. Table 6 summarizes the laboratory results for the nonmethane VOCs. Table 7 presents all of the soil-gas survey laboratory analytical results. Figure 15 shows the sampling locations and summarizes the methane analytical results, and Figure 16 shows the sampling locations and summarizes the total nonmethane VOC analytical results.

3.3 GAS MONITORING PROBE AND GROUNDWATER MONITORING WELL RESULTS

This section presents the results of the field monitoring and quarterly sampling at the GMPs and monitoring wells installed within the waste and the laboratory results. Appendix C contains the quality control summary report for the laboratory data.

3.3.1 Field Screening Results

The Navy conducted weekly and quarterly field monitoring at the 26 GMPs and at IR01MW16A. Weekly monitoring was conducted between April 2002 and March 2003. Weekly monitoring conducted after the fourth round of quarterly monitoring (November 13, 2002) is considered outside the scope of this document. Results of weekly monitoring conducted after November 13, 2002, are included in the removal action closeout report (Tetra Tech In Progress). Table 8 presents the results of the field screening measurements through November 13, 2002. Figure 17 shows the time versus concentration results for weekly field monitoring at the GMPs.

3.3.2 Laboratory Results for GMPs

Air samples collected from GMPs and monitoring wells were analyzed for methane and nonmethane VOCs. The subsections below summarize the laboratory results for methane and nonmethane VOCs. Table 9 summarizes the analytical results for the GMPs.

3.3.2.1 Methane Results

During 2002, four rounds of quarterly monitoring were conducted on April 22, May 22, July 31, and November 13. During the first three sampling rounds, samples were collected from GMP01 through GMP08, GMP11, and GMP12. These GMPs corresponded with locations where field screening results exhibited methane concentrations exceeding 100 percent of the LEL (Section 2.3). All methane results from the laboratory's analysis were above the LEL (Table 9).

On June 5, 2002, additional samples were collected for laboratory analysis from the GMPs located along Crisp Avenue (GMP13 through GMP19). Methane was not detected in any of the samples.

The landfill gas extraction system became operational in the UCSF compound before the last round of quarterly sampling. As part of the extraction system, GMP22 through GMP26 were installed on the UCSF compound. When quarterly monitoring was conducted in November 2002, these GMPs were added to the investigation and were sampled along with GMP01A, GMP02A, GMP04A, GMP07A, and GMP08A. Methane was detected above the 100 percent LEL for methane at GMP08A (Table 9).

3.3.2.2 Nonmethane VOC Results

Fifty-five nonmethane VOCs were detected during the GMP quarterly monitoring (Table 9). There are no current PRGs established for VOCs detected in soil-gas; therefore, a comparison of these detections with PRGs was not performed. As shown in Table 9, the total nonmethane VOC concentrations decreased significantly after the landfill gas extraction system became operational.

During the quarterly monitoring sampling conducted on July 31, 2002, EPA collected split samples from GMP01, GMP07, GMP08, GMP09, and GMP12. EPA submitted these samples to a different EPA laboratory for VOC analysis using EPA method TO-15 except for samples from GMP09, for which the Navy used EPA methods TO-14A, 25C, and 3C. The Navy did not collect a sample at GMP09 because field readings at that location did not meet sampling criteria.

The Navy samples detected more nonmethane VOCs than were detected by the EPA laboratory. This discrepancy was caused by the higher reporting limits used by the EPA laboratory. The results of the nonmethane VOCs detected by the EPA laboratory were consistent with the results of those compounds reported by the Navy. Table 10 presents a comparison of the EPA and Navy split-sample analytical results.

3.3.3 Laboratory Results for Groundwater Monitoring Wells

The air samples collected from groundwater monitoring wells were analyzed for methane and nonmethane VOCs. The subsections below summarize the laboratory results for methane and

nonmethane VOCs. Table 11 summarizes the analytical results for the air samples collected from the groundwater monitoring wells.

3.3.3.1 Methane Results

During 2002, four rounds of quarterly monitoring were conducted on April 22, May 22, August 1, and November 13. Samples were collected at four monitoring wells (IR01MW366A, IR01MW16A, IR01MW18A, and IR01MWI-5) based on field screening results (Section 2.3). All methane results were above the 5 percent by volume (100 percent of the LEL for methane) in these wells. These exceedances were expected because the wells are located within the landfill.

3.3.3.2 Nonmethane VOC Results

During quarterly sampling, 36 nonmethane VOCs were detected. There are no current PRGs established for VOCs detected in soil-gas; therefore, a comparison of these detections with PRGs was not performed.

4.0 CONCLUSIONS

The following objectives of the landfill gas investigation were identified in the data quality objectives presented in the FSP/QAPP (Tetra Tech 2002a):

- Establish the extent of lateral landfill gas migration
- Define the extent and composition of landfill gas (other than methane) that may cause air emissions

This section summarizes the conclusions of the landfill gas investigation based on the results of the ambient air surveys, the soil-gas survey, and the GMP monitoring results.

4.1 AMBIENT AIR SURVEYS

Ambient air monitoring surveys were conducted to establish the extent of lateral landfill gas migration both within the breathing zone above the ground surface and within building atmospheres. This section summarizes the conclusions of the ambient air surveys based on the field screening and laboratory analysis results. Results and conclusions are identified for each ambient air investigation component of the landfill gas characterization.

The following conclusions were identified based on the results of field screening:

- **Within the Landfill Limits.** Landfill gas was not detected above the ground surface or within subterranean structures or the electrical substation except for combustible gases around monitoring wells IR01MW18A and IR01MW38A and near Vault A. Based on the results, these amounts of landfill gas in ambient air within the landfill limits are considered to be negligible.
- **Within 300 Feet of the Landfill Limit.** Landfill gas was not detected within the breathing zone or within building atmospheres except at four locations near a utility corridor that runs along the fence line to the light pole in the western corner of the UCSF compound. The following results were indicated for the four locations:
  - Methane exceeded 100 percent of the LEL at the ground surface around the light pole near the southwestern corner of the UCSF compound
  - Methane was detected at 5 to 37 percent of the LEL at two locations along the fence between the landfill and the UCSF compound
  - Methane exceeded 25 percent LEL at Location B just outside the Building 830 crawlspace
- **Extended Survey for Accessible Buildings Outside the 300-Foot Perimeter.** Landfill gas was not detected in the breathing zone air around or within the building atmospheres of the following accessible buildings and structures:
  - Buildings 808, 809, 810, and 815
  - Abandoned kennels and storage trailers north of the landfill
  - The immediate areas surrounding inaccessible Buildings 816 and 817A, including the building-to-ground interface, holes in the walls, and nearby vaults

Samples were collected and analyzed at three locations around the light pole and four locations within the Building 830 crawlspace. The following conclusions were identified for methane and nonmethane VOCs based on the results of laboratory analysis:

- Methane was detected at a maximum concentration of 0.6 percent of the LEL in one light pole sample; all gas samples from within the Building 830 crawlspace were less than 1 percent of the LEL. These trace concentrations are considered negligible
- Nonmethane VOCs were detected above PRGs at the following two locations: the light pole (six VOCs) and Building 830 crawlspace (three VOCs). These detections occurred before gas was extracted from within the UCSF compound. VOCs were not detected after gas extraction began in October 2002.

Results of the ambient air survey indicate that landfill gas is not in the breathing zone or within building atmospheres within the landfill, within 300 feet of the landfill limit, or within surveyed, accessible buildings outside the 300-foot perimeter.

4.2 SOIL-GAS SURVEY

The soil-gas survey was conducted to establish the extent of lateral gas migration in the vadose zone above the water table. This section summarizes the conclusions of the soil-gas survey based on the field screening and laboratory analysis results. Results and conclusions are identified for each soil-gas investigation component of the landfill gas characterization.

The following conclusions were identified for methane and other combustible gases based on the field screening results:

- **North Side of the Landfill.** Methane and other combustible gases exceeded 25 percent of the LEL along the north side of the landfill, where waste fill extends up to the northern fence line (Figure 15). A paved area immediately north of the fence line within the UCSF compound provides a confining layer through which landfill gases cannot easily dissipate. Methane gas concentrations drop to below detectable levels along the north edge of the UCSF compound pavement. Methane was not detected north of the UCSF compound. Based on these results, the lateral extent of methane migration detected near the landfill has been delineated (Figure 15). With the installation and operation of the gas control/gas extraction system, methane migration across the landfill boundary is being controlled.

- **East, South, and West Sides of the Landfill**. Methane or other combustible gases were not detected at levels exceeding either 25 percent of the LEL or the 5 percent by volume criteria along the east, south, and west sides of the landfill (SG09 through SG15, and SG19 through SG24). Along these sides of the landfill, no continuous confining layers were observed at the surface or in the subsurface.

In addition, before installation of the gas control/gas extraction system, nonmethane VOCs were detected at 11 locations (SG01C, SG01D, SG01E, SG02B, SG02C, SG11, SG12, SG15, SG21A, SG25C, and SG27A) at concentrations exceeding 5 ppm above background.

Samples were collected and analyzed for methane and nonmethane VOCs at 92 locations within and around the landfill. The following conclusions were identified for methane and nonmethane VOCs based on the results of laboratory analysis:

- Methane results correspond very well with the field screening results, confirming the lateral extent of methane.

- Nonmethane VOCs were detected at 11 locations at concentrations exceeding 5 ppm above background. At one location (SG12) near IR04MW13A, elevated levels of tetrachloroethene, trichloroethene, and their degradation products were detected in groundwater. These results were detected before installation of the gas control/gas extraction system.

Results of the soil-gas survey, except for SG12, indicate that landfill gas is not in the vadose zone along the east, south, and west sides of the landfill. Both methane and nonmethane VOCs were present at higher concentrations in the vadose zone along the northern side of the landfill, where the area adjacent to the landfill is paved, and gases cannot easily dissipate. However, this area along the northern side of the landfill is where the landfill gas control system was installed; this system is preventing further northerly migration of landfill gas. Table 6 presents the analytical results for individual compounds comprising the nonmethane VOCs.

4.3 GAS MONITORING PROBE MONITORING

Twenty-six GMPs were installed around the northern and western perimeter of the landfill waste to monitor the migration of landfill gas from the landfill. This section summarizes the conclusions of the GMP monitoring based on the field screening and laboratory analysis results. Results and conclusions are identified for each GMP monitoring investigation component of the landfill gas characterization.

Weekly field screening results from April 2002 through November 2002 indicated the following:

- Methane levels were above 5 percent by volume (100 percent of the LEL for methane) in GMPs north and west of the landfill cap (GMP01 through GMP12) (Table 8) before the landfill gas control system began operating in October 2002.
- Methane levels were below the 5 percent by volume (100 percent of the LEL for methane) in GMP01 through GMP 07 and GMP10 through GMP 12 after operation of the landfill gas control system began.
- Methane was detected above 5 percent by volume (100 percent of the LEL for methane) in one sample during the last quarter of sampling at GMP08A, which is located on the northeastern side of the landfill. The methane concentration at this location was 6.6 percent by volume. Although this detection was above 5 percent by volume, weekly monitoring data show that it has steadily decreased since the landfill gas control system began operating. The last methane reading taken at GMP08A on March 26, 2003, was 1.6 percent by volume.
- Methane was not detected in the GMPs along Crisp Avenue during field screening. These GMPs along Crisp Avenue are considered to be north of the extent of landfill gas.

Air samples collected from the GMPs were analyzed for methane and nonmethane VOCs. Analytical results for methane and nonmethane VOCs for the four quarters of sampling are presented below.

- During the first three quarters, from April to July 2002, 19 GMPs were monitored. Methane levels were above 5 percent by volume (100 percent of the LEL for methane) in GMP01 through GMP12. These 12 GMPs are located around the northern edge of the landfill in areas where combustible gases are most likely to accumulate at the landfill (Figure 16).

- In June 2002, GMP13 through GMP19 (along Crisp Avenue) were sampled, and no methane was detected.

- During the fourth quarter (November 2002), 26 GMPs were monitored after the landfill gas control system began operating in October 2002. Methane detections at all of the GMPs, except GMP08A, have decreased below the 5 percent by volume (100 percent of the LEL for methane) (Figure 16 and Table 9).

- Several nonmethane VOCs were detected in samples collected during the quarterly sampling events.

- VOC results in the GMPs located along Crisp Avenue were significantly lower than the total nonmethane VOC concentrations detected at the GMPs around the perimeter of the landfill and at the UCSF compound.

- A screening evaluation was conducted to evaluate potential human health risks resulting from the low levels of VOCs detected in GMPs along Crisp Avenue. This evaluation concluded that nonmethane VOCs do not pose an unacceptable risk to human health at any houses that may be located along Crisp Avenue or on Parcel A in the future (Appendix D).

4.4 GROUNDWATER MONITORING WELLS MONITORING

This section summarizes the conclusions based on the field screening and laboratory analysis results of monitoring at groundwater wells. Results and conclusions are identified for each monitoring well investigation component of the landfill gas characterization.

From April to November 2002, four groundwater monitoring wells (IR01MW366A, IR01MW16A, IR01MW18A, and IR01MWI-5) were monitored at the landfill. Results indicated the following:

- Methane levels were above 5 percent by volume (100 percent of the LEL for methane) in all four wells. These data correlate with the weekly monitoring data for April 2002 through November 2002 (Table 8).

- As expected, methane concentrations were higher in monitoring wells located within the limit of the waste fill (IR01MW16A, IR01MW18A, and IR01MWI-5) (44 to 67 percent volume in air) than in monitoring well IR01MW366A, which is located outside the limit of waste fill (11 to 21 percent volume in air).

- Nonmethane VOCs were detected in air samples collected from four monitoring wells during the quarterly sampling events.
- Total nonmethane VOCs detected in these monitoring wells were similar to the total nonmethane VOCs detected in the GMPs located around the perimeter of the landfill.
- Several individual VOCs detected in the GMPs located around the landfill and north of the landfill were not detected in the air samples collected at the monitoring wells.

5.0 REFERENCES

California Department of Health Services. 1987. "Remedial Action Order, Docket No. HSA87/88-034RA." January 7.

California Integrated Waste Management Board. 1997. "Landfill Gas Monitoring Procedures, Section II.A.4." August 29.

International Technology Corporation (IT Corp.). 1999. "Post Construction Report, Site IR-01/21 Industrial Landfill Removal Action, Hunters Point Shipyard, San Francisco, California." July.

Tetra Tech EM Inc. (Tetra Tech). 1998. "Draft Parcel E Feasibility Study, Hunters Point Shipyard, San Francisco, California." January 15.

Tetra Tech. 2000. "Action Memorandum, Parcel E Landfill Fire Emergency Removal Action, Hunters Point Shipyard, San Francisco, California." November.

Tetra Tech. 2002a. "Draft Final Field Sampling Plan/Quality Assurance Project Plan (FSP/QAPP) for Parcel E Nonstandard Data Gaps Investigation (Industrial Landfill and Wetlands Delineation), Hunters Point Shipyard, San Francisco, California." January 8.

Tetra Tech. 2002b. "Landfill Gas Technical Memorandum, Parcel E Industrial Landfill, Hunters Point Shipyard, San Francisco, California." July 7.

Tetra Tech. 2002c. "Parcel E Landfill Gas Time-Critical Removal Action, Action Memorandum, Hunters Point Shipyard, San Francisco, California." September 23.

Tetra Tech. 2003a. "Parcel E Nonstandard Data Gaps Investigation Landfill Lateral Extent, Hunters Point Shipyard, San Francisco." May.

Tetra Tech. 2003b. "Final Parcel E Groundwater Summary Report, Phase III Groundwater Data Gaps Investigation, Hunters Point Shipyard, San Francisco, California." October.

Tetra Tech. In Progress. "Internal Draft Landfill Gas Time-Critical Removal Action Closeout Report, Parcel E Hunters Point Shipyard, San Francisco, California." September 12.

Tetra Tech, Uribe and Associates, and Levine-Fricke-Recon. 1997. "Draft Final Parcel E Remedial Investigation Report, Hunters Point Shipyard, San Francisco, California." October 27.

U.S. Environmental Protection Agency (EPA). 2000. "Guidance for Data Quality Assessment, Practical Methods for Data Analysis, EPA QA/G9, QA00 Update." EPA 600/R-96/084. Office of Environmental Information. July.

EPA. 2002. "Preliminary Remediation Goals, Region 9." October. Available Online at: http://www.epa.gov/Region9/waste/sfund/prg/index.htm

FIGURES

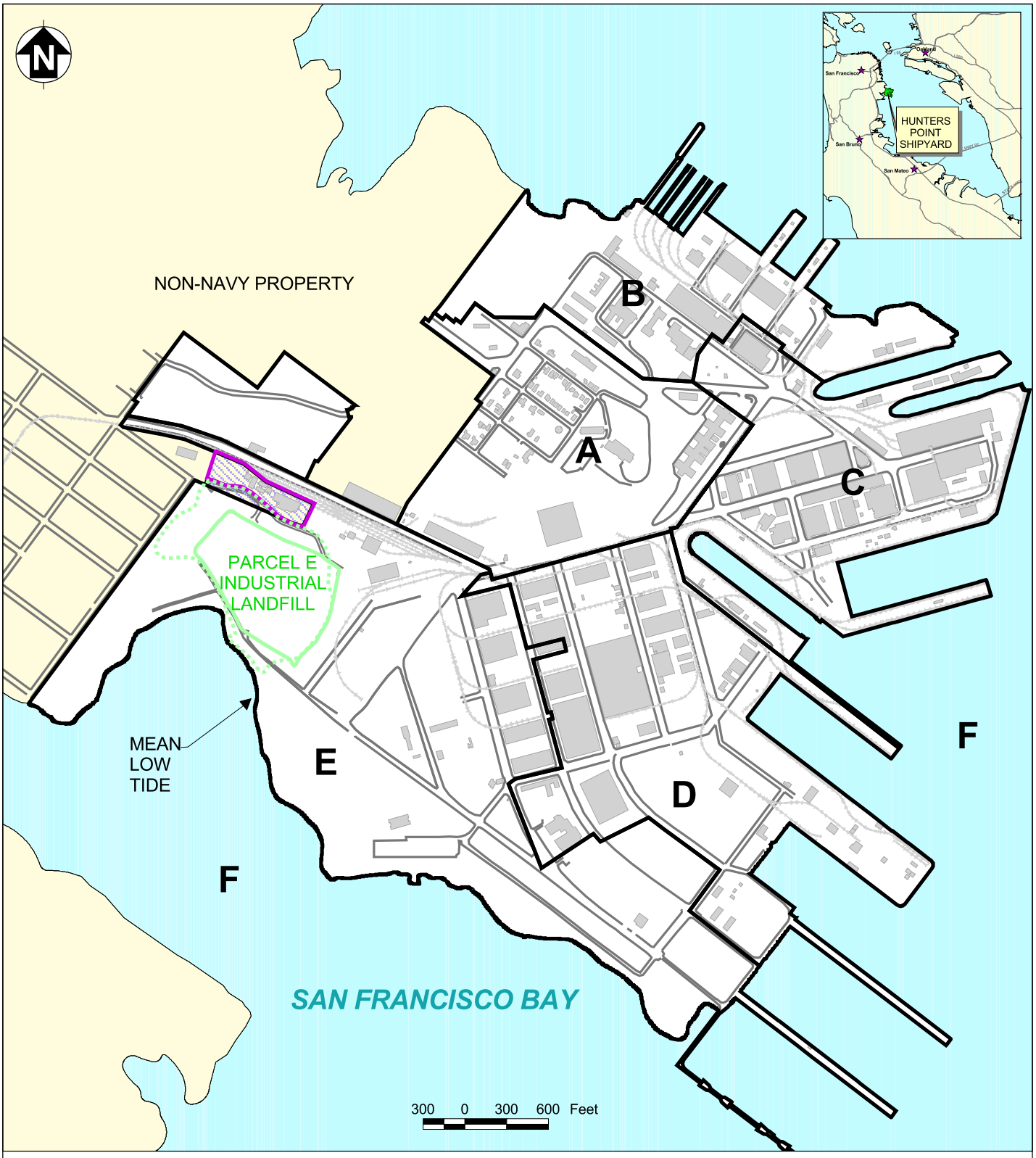

Tetra Tech EM Inc.

- Approximate Extent of Solid Waste
- Limit of Landfill Cap
- Dike of Impervious Clay
- University of California, San Francisco Compound
- University of California, San Francisco Property
- Hunters Point Shipyard Boundary
- Building
- Rail Line
- Road
- Non-Navy Property

Hunters Point Shipyard, San Francisco, California
U.S. Navy Southwest Division, NAVFAC, San Diego

FIGURE 1
FACILITY LOCATION MAP

Parcel E Nonstandard Data Gaps Investigation
Landfill Gas Characterization

2003-11-26 g:\hunters point\landfill gas characterization.apr TtEMI-SD KCH

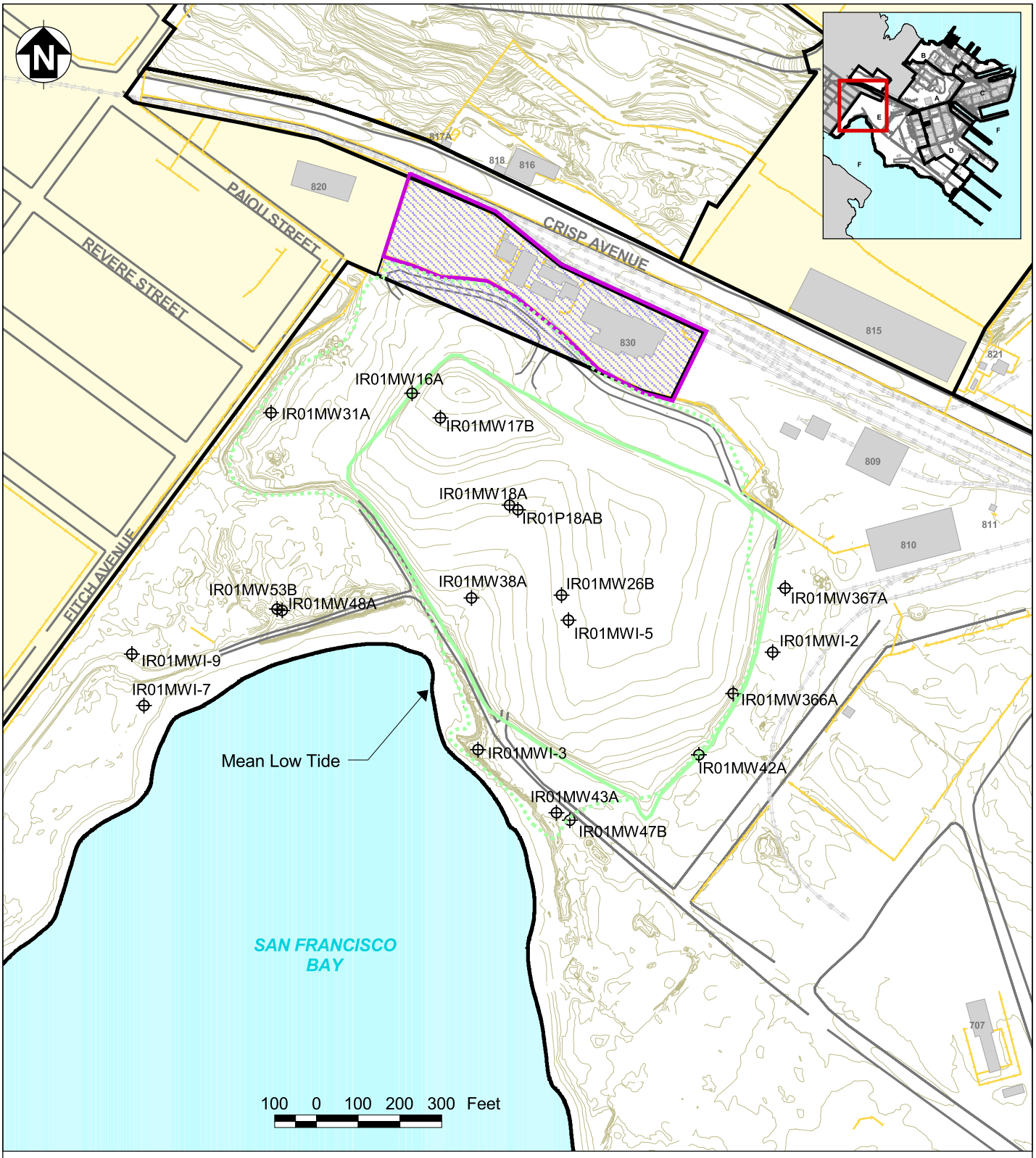

Tetra Tech EM Inc.

Installation Restoration (IR)-01/21 Monitoring Wells/Piezometers
Approximate Extent of Solid Waste
Limit of Landfill Cap
University of California, San Francisco Compound
Ground Surface Elevation (1-Foot Contours)
University of California, San Francisco Property
Hunters Point Shipyard Boundary
Building
Fence
Rail Line
Road
Non-Navy Property

Hunters Point Shipyard, San Francisco, California
U.S. Navy Southwest Division, NAVFAC, San Diego

FIGURE 2
SITE LOCATION MAP

Parcel E Nonstandard Data Gaps Investigation
Landfill Gas Characterization

2003-12-18 g:\hunters point\landfill gas characterization.apr TtEMI-SD KCH

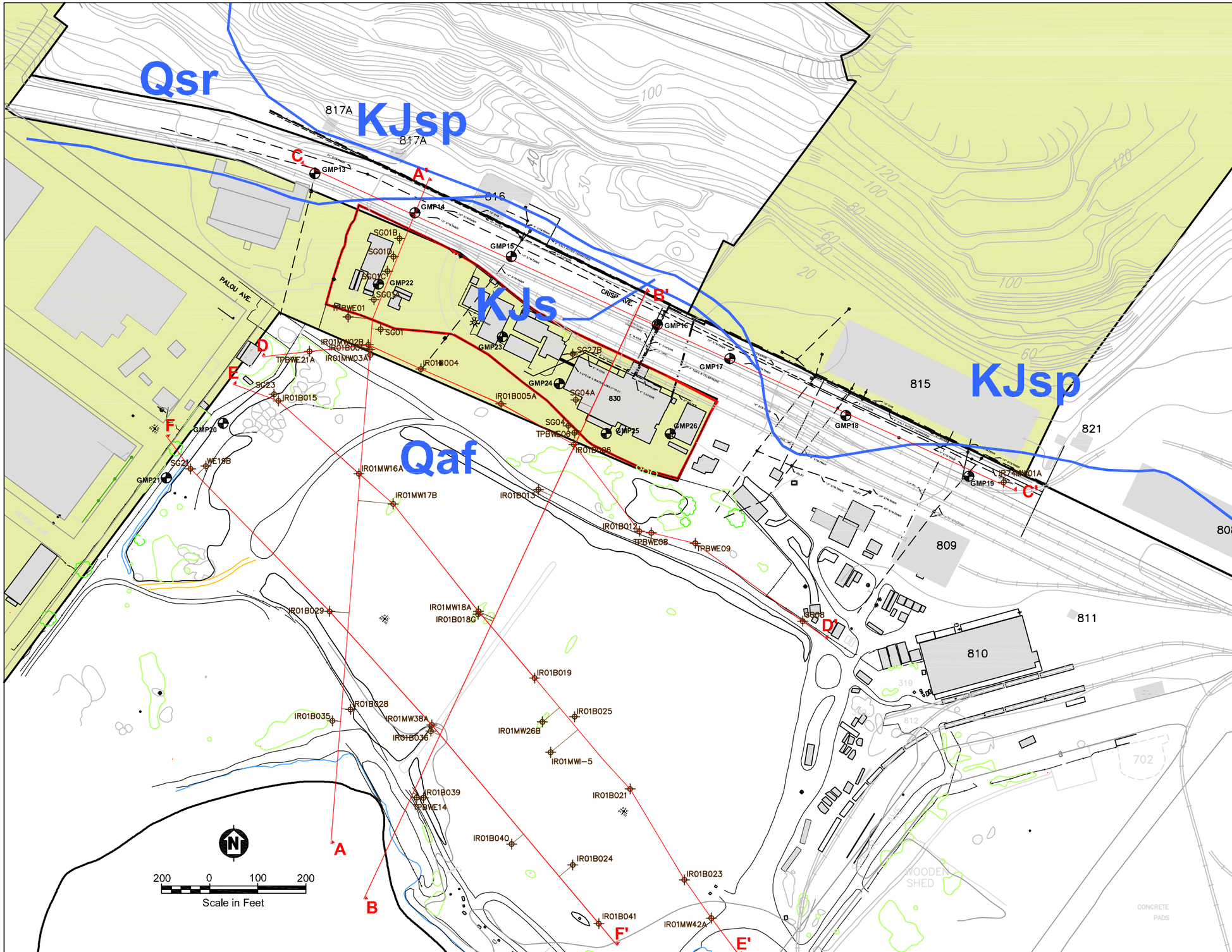

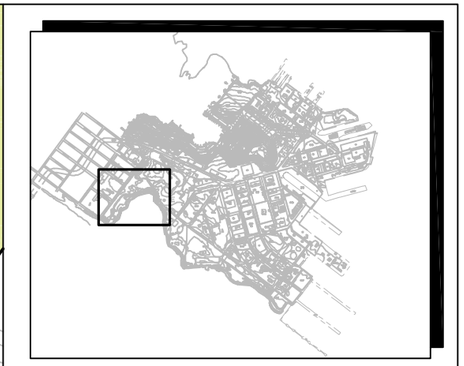

TPBWE09 Landfill Extent Test Pit/ Landfill Extent Test Boring
GMP13 Existing Gas Monitoring Probe
IR01MW36 Existing Monitoring Well
IR01B006 Existing Boring
SG02 Soil-Gas Test Location
Geologic Contact
Qaf Artificial Fill
Qsr Slope Debris and Ravine Fill
KJs Sandstone and Shale Bedrock
KJsp Serpentinite Bedrock
Cross-Section Location
Gas
Sanitary Sewer
Storm Drain
255 Building or Structure
UCSF Boundary
Parcel Boundary
Non-Navy Property

Notes:
Contours shown are from aerial survey conducted during April 2002.

KJs Shale Bedrock
KJsp Serpentinite Bedrock
Qaf Fill
Qsr Colluvium
UCSF University of California, San Francisco

SOURCE FOR GEOLOGY: TETRA TECH EM INC. 1998.

Tetra Tech EM Inc.

Hunters Point Shipyard, San Francisco, California
U.S. Navy Southwest Division, NAVFAC, San Diego

FIGURE 3
CROSS-SECTION LOCATION MAP

Parcel E Nonstandard Data Gaps Investigation
Landfill Gas Characterization

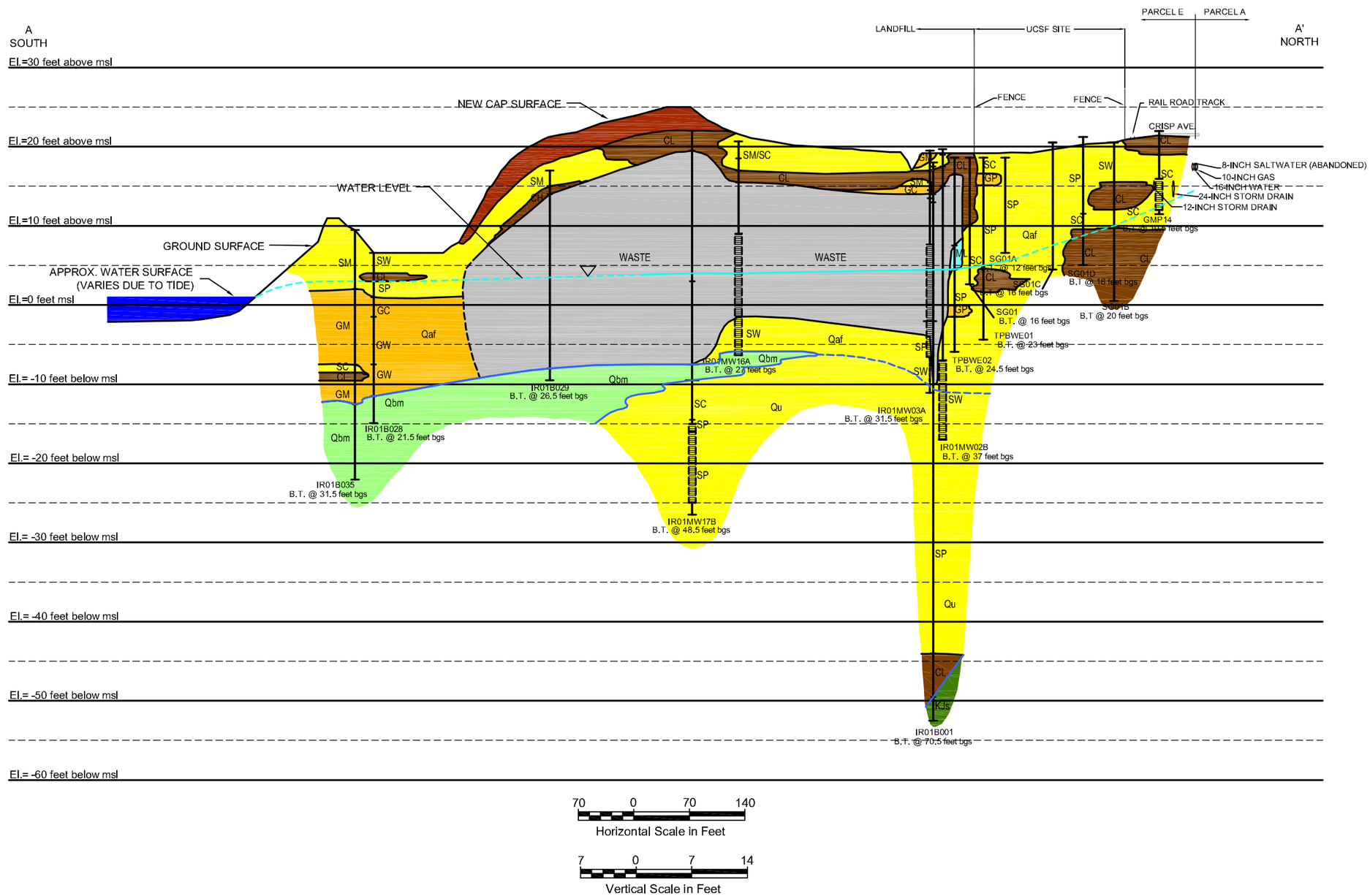

Water Table Based on Measurements on February 20, 2002. Water Level Shown is the A-Aquifer.

Storm Water Sewer Utility Line

Lithologic or Waste Boundary (dashed where inferred)

Formation Boundary (dashed where inferred)

Boring Log; Tic Marks Represent Changes in Lithology

Screened Area

Cap

Sand

Clay

Silt

Gravel

Bay Mud (clay)

Waste

Bedrock

BGS	Below Ground Surface
B.T.	Borehole Termination
CH	Highly Plastic Clay
CL	Sandy or Silty Clay
El.	Elevation
GC	Clayey Gravel
GM	Silty Gravel
GMP	Gas Monitoring Probe
GP	Poorly Graded Gravel
GW	Well-Graded Gravel
KJs	Shale Bedrock
KJsp	Serpentinite Bedrock
ML	Silt
MSL	Mean Sea Level
SC	Clayey Sand
SM	Silty Sand
SP	Poorly Graded Sand
SW	Well-Graded Sand
Qaf	Artificial Fill
Qbm	Bay Mud (clay)
Qu	Undifferentiated Upper Sands
Quus	Undifferentiated Sediments

Tetra Tech EM Inc.

Hunters Point Shipyard, San Francisco, California
U.S. Navy Southwest Division, NAVFAC, San Diego

FIGURE 4
CROSS SECTION A-A'

Parcel E Nonstandard Data Gaps Investigation
Landfill Gas Characterization

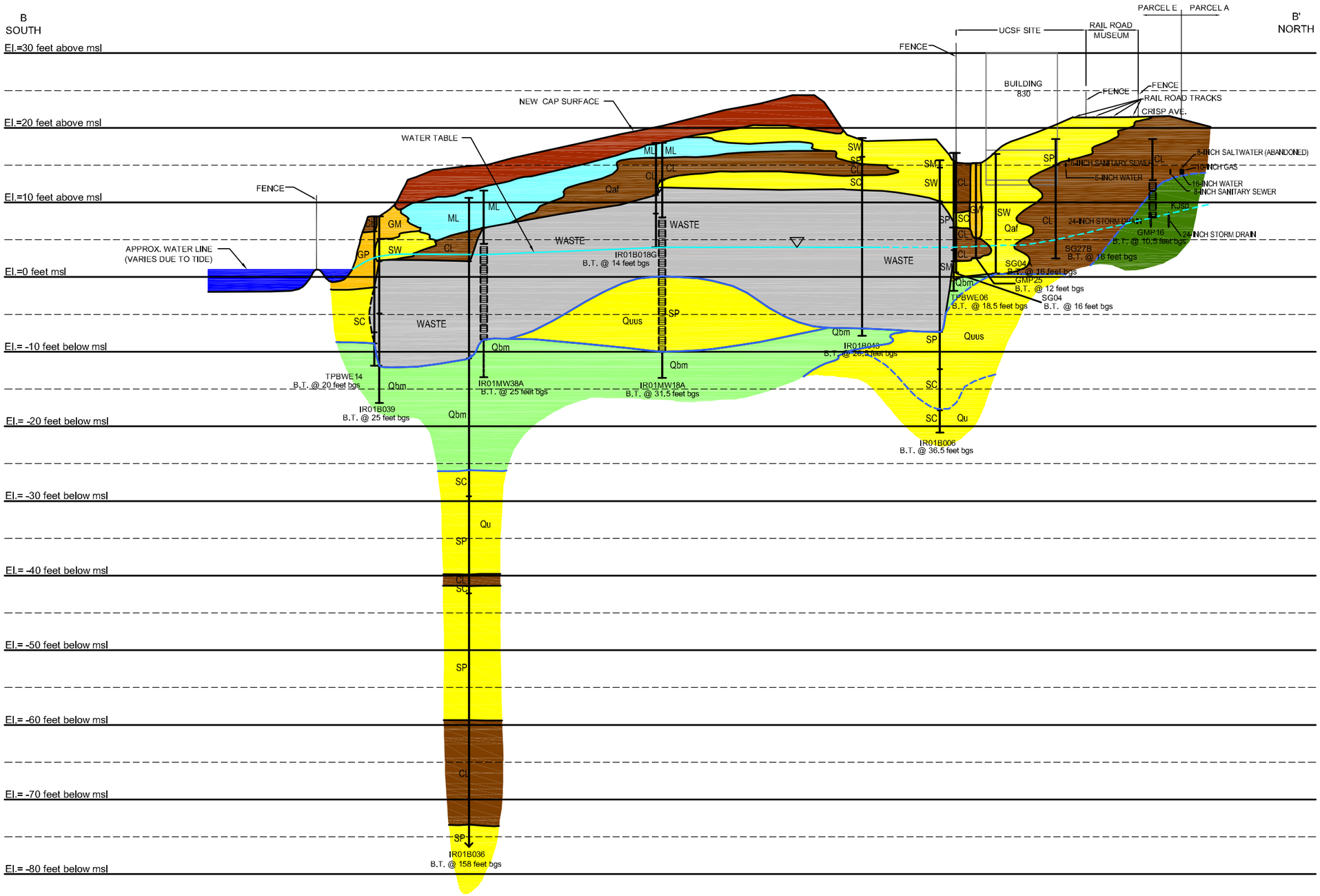

Water Table Based on Measurements on February 20, 2002. Water Level Shown is the A-Aquifer.

Storm Water Sewer Utility Line

Lithologic or Waste Boundary (dashed where inferred)

Formation Boundary (dashed where inferred)

Boring Log; Tic Marks Represent Changes in Lithology

Screened Area

Cap

Sand

Clay

Silt

Gravel

Bay Mud (clay)

Waste

Bedrock

BGS	Below Ground Surface
B.T.	Borehole Termination
CH	Highly Plastic Clay
CL	Sandy or Silty Clay
El.	Elevation
GC	Clayey Gravel
GM	Silty Gravel
GMP	Gas Monitoring Probe
GP	Poorly Graded Gravel
GW	Well-Graded Gravel
KJs	Shale Bedrock
KJsp	Serpentinite Bedrock
ML	Silt
MSL	Mean Sea Level
SC	Clayey Sand
SM	Silty Sand
SP	Poorly Graded Sand
SW	Well-Graded Sand
Qaf	Artificial Fill
Qbm	Bay Mud (clay)
Qu	Undifferentiated Upper Sands
Quus	Undifferentiated Sediments

Tetra Tech EM Inc.

Hunters Point Shipyard, San Francisco, California
U.S. Navy Southwest Division, NAVFAC, San Diego

FIGURE 5
CROSS SECTION B-B'

Parcel E Nonstandard Data Gaps Investigation
Landfill Gas Characterization

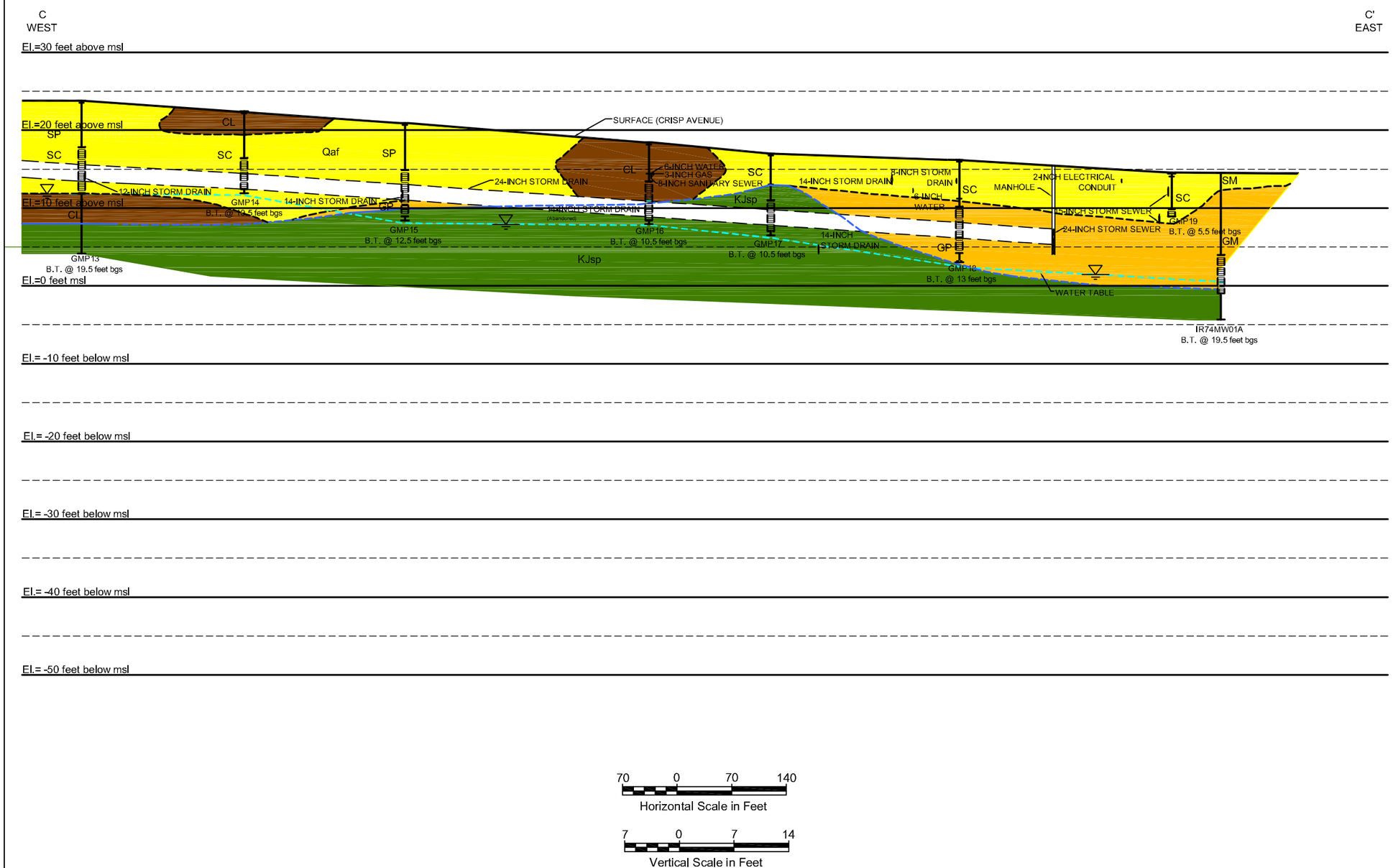

70 0 70 140
Horizontal Scale in Feet

7 0 7 14
Vertical Scale in Feet

Water Table Represents the Estimated Low Groundwater Level Based on the Measurements at GMPs on May 31, 2002, that were adjusted approximately 2 feet downward to account for the maximum historic-level fluctuation.

Storm Water Sewer Utility Line

Lithologic or Waste Boundary (dashed where inferred)

Formation Boundary (dashed where inferred)

Boring Log; Tic Marks Represent Changes in Lithology

Screened Area

Cap

Sand

Clay

Silt

Gravel

Bay Mud (clay)

Waste

Bedrock

BGS	Below Ground Surface
B.T.	Borehole Termination
CH	Highly Plastic Clay
CL	Sandy or Silty Clay
El.	Elevation
GC	Clayey Gravel
GM	Silty Gravel
GMP	Gas Monitoring Probe
GP	Poorly Graded Gravel
GW	Well-Graded Gravel
KJs	Shale Bedrock
KJsp	Serpentinite Bedrock
ML	Silt
MSL	Mean Sea Level
SC	Clayey Sand
SM	Silty Sand
SP	Poorly Graded Sand
SW	Well-Graded Sand
Qaf	Artificial Fill
Qbm	Bay Mud (clay)
Qu	Undifferentiated Upper Sands
Quus	Undifferentiated Sediments

Tetra Tech EM Inc.

Hunters Point Shipyard, San Francisco, California
U.S. Navy Southwest Division, NAVFAC, San Diego

FIGURE 6
CROSS SECTION C-C'

Parcel E Nonstandard Data Gaps Investigation
Landfill Gas Characterization

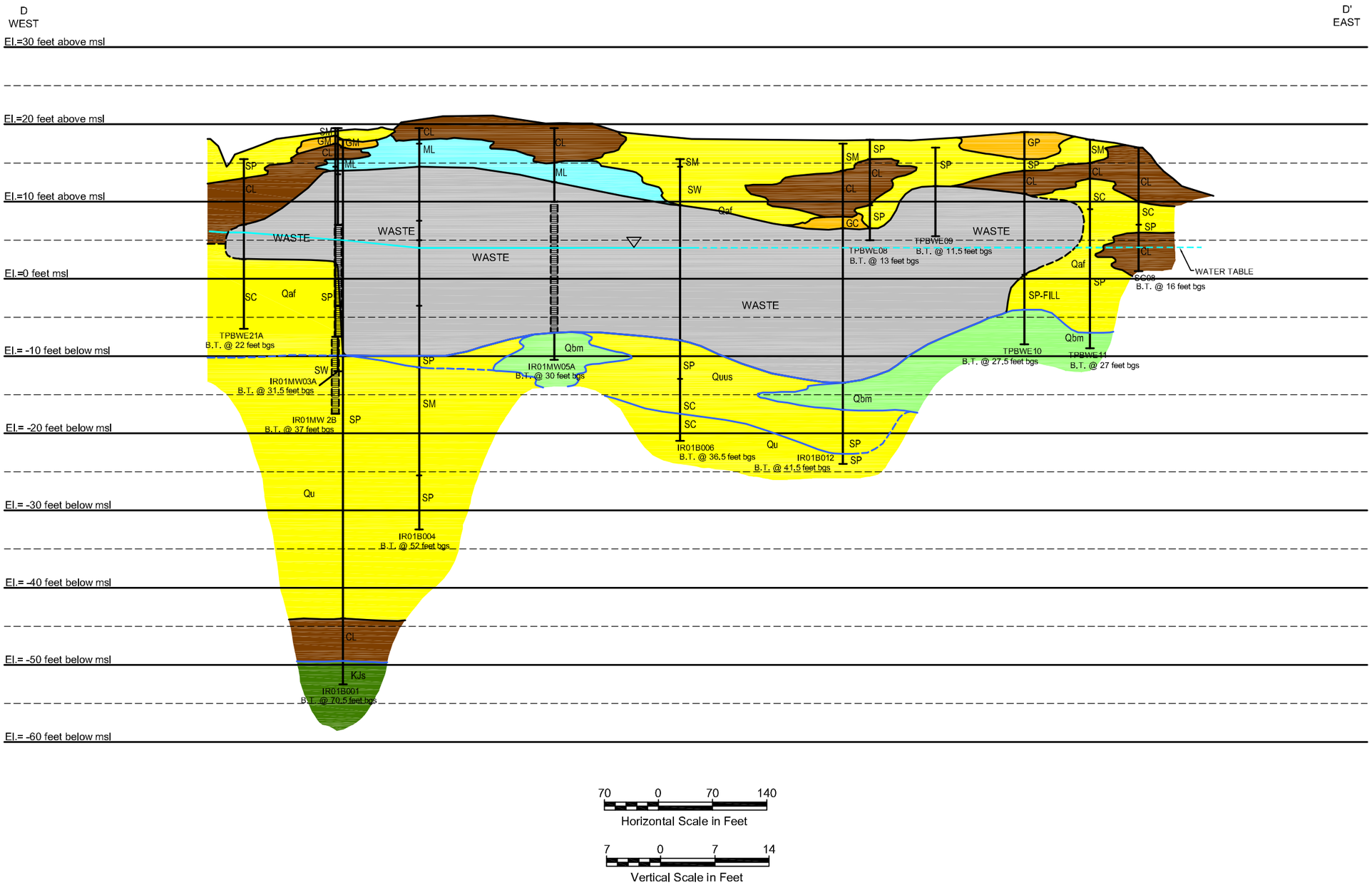

Water Table Based on Measurements on February 20, 2002. Water Level Shown is the A-Aquifer.

Storm Water Sewer Utility Line

Lithologic or Waste Boundary (dashed where inferred)

Formation Boundary (dashed where inferred)

Boring Log; Tic Marks Represent Changes in Lithology

Screened Area

Cap

Sand

Clay

Silt

Gravel

Bay Mud (clay)

Waste

Bedrock

BGS	Below Ground Surface
B.T.	Borehole Termination
CH	Highly Plastic Clay
CL	Sandy or Silty Clay
El.	Elevation
GC	Clayey Gravel
GM	Silty Gravel
GMP	Gas Monitoring Probe
GP	Poorly Graded Gravel
GW	Well-Graded Gravel
KJs	Shale Bedrock
KJsp	Serpentinite Bedrock
ML	Silt
MSL	Mean Sea Level
SC	Clayey Sand
SM	Silty Sand
SP	Poorly Graded Sand
SW	Well-Graded Sand
Qaf	Artificial Fill
Qbm	Bay Mud (clay)
Qu	Undifferentiated Upper Sands
Quus	Undifferentiated Sediments

Tetra Tech EM Inc.

Hunters Point Shipyard, San Francisco, California
U.S. Navy Southwest Division, NAVFAC, San Diego

FIGURE 7
CROSS SECTION D-D'

Parcel E Nonstandard Data Gaps Investigation
Landfill Gas Characterization

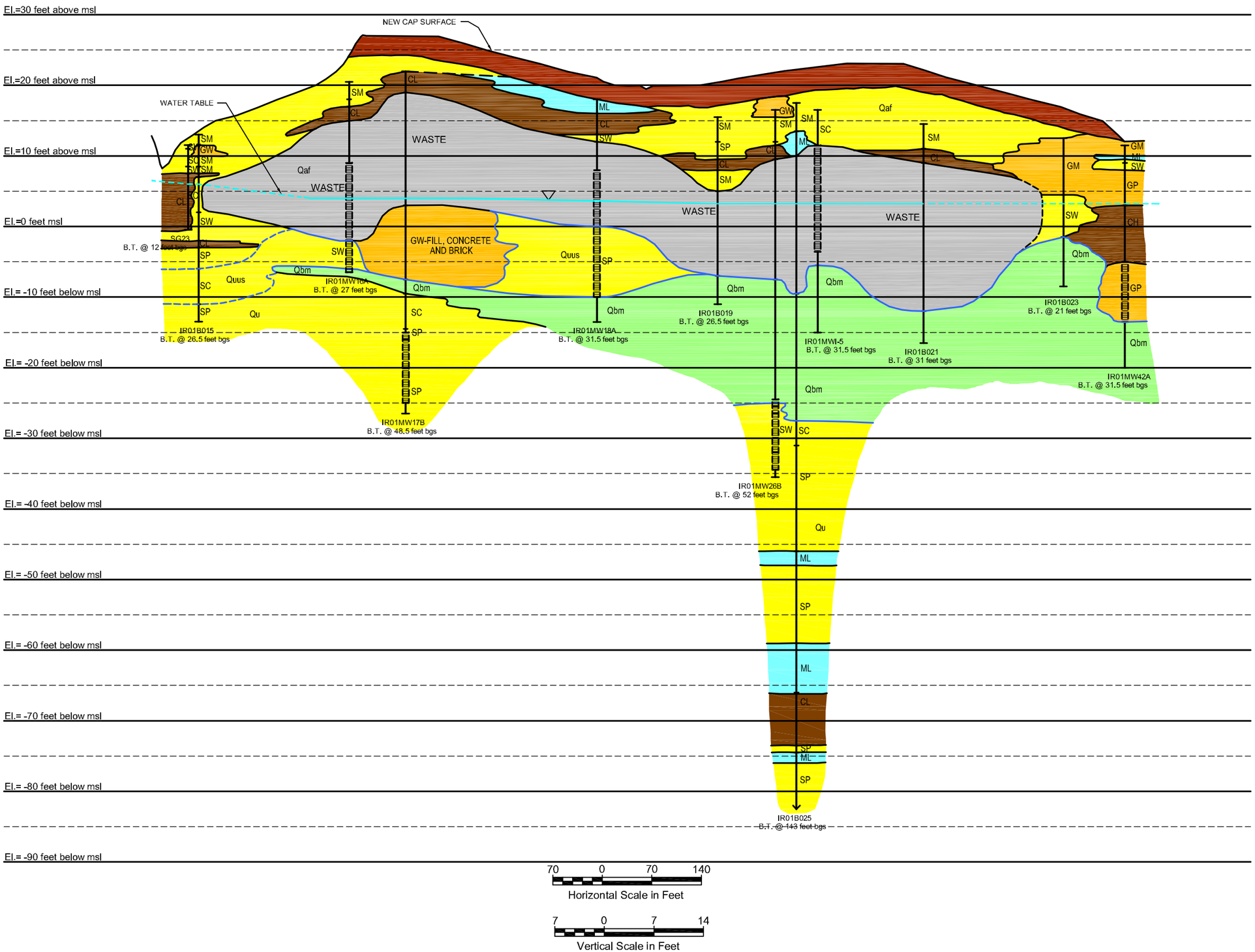

Water Table Based on Measurements on February 20, 2002. Water Level Shown is the A-Aquifer.

Storm Water Sewer Utility Line

Lithologic or Waste Boundary (dashed where inferred)

Formation Boundary (dashed where inferred)

Boring Log; Tic Marks Represent Changes in Lithology

Screened Area

Cap

Sand

Clay

Silt

Gravel

Bay Mud (clay)

Waste

Bedrock

BGS	Below Ground Surface
B.T.	Borehole Termination
CH	Highly Plastic Clay
CL	Sandy or Silty Clay
El.	Elevation
GC	Clayey Gravel
GM	Silty Gravel
GMP	Gas Monitoring Probe
GP	Poorly Graded Gravel
GW	Well-Graded Gravel
KJs	Shale Bedrock
KJsp	Serpentinite Bedrock
ML	Silt
MSL	Mean Sea Level
SC	Clayey Sand
SM	Silty Sand
SP	Poorly Graded Sand
SW	Well-Graded Sand
Qaf	Artificial Fill
Qbm	Bay Mud (clay)
Qu	Undifferentiated Upper Sands
Quus	Undifferentiated Sediments

Tetra Tech EM Inc.

Hunters Point Shipyard, San Francisco, California
U.S. Navy Southwest Division, NAVFAC, San Diego

FIGURE 8
CROSS SECTION E-E'

Parcel E Nonstandard Data Gaps Investigation
Landfill Gas Characterization

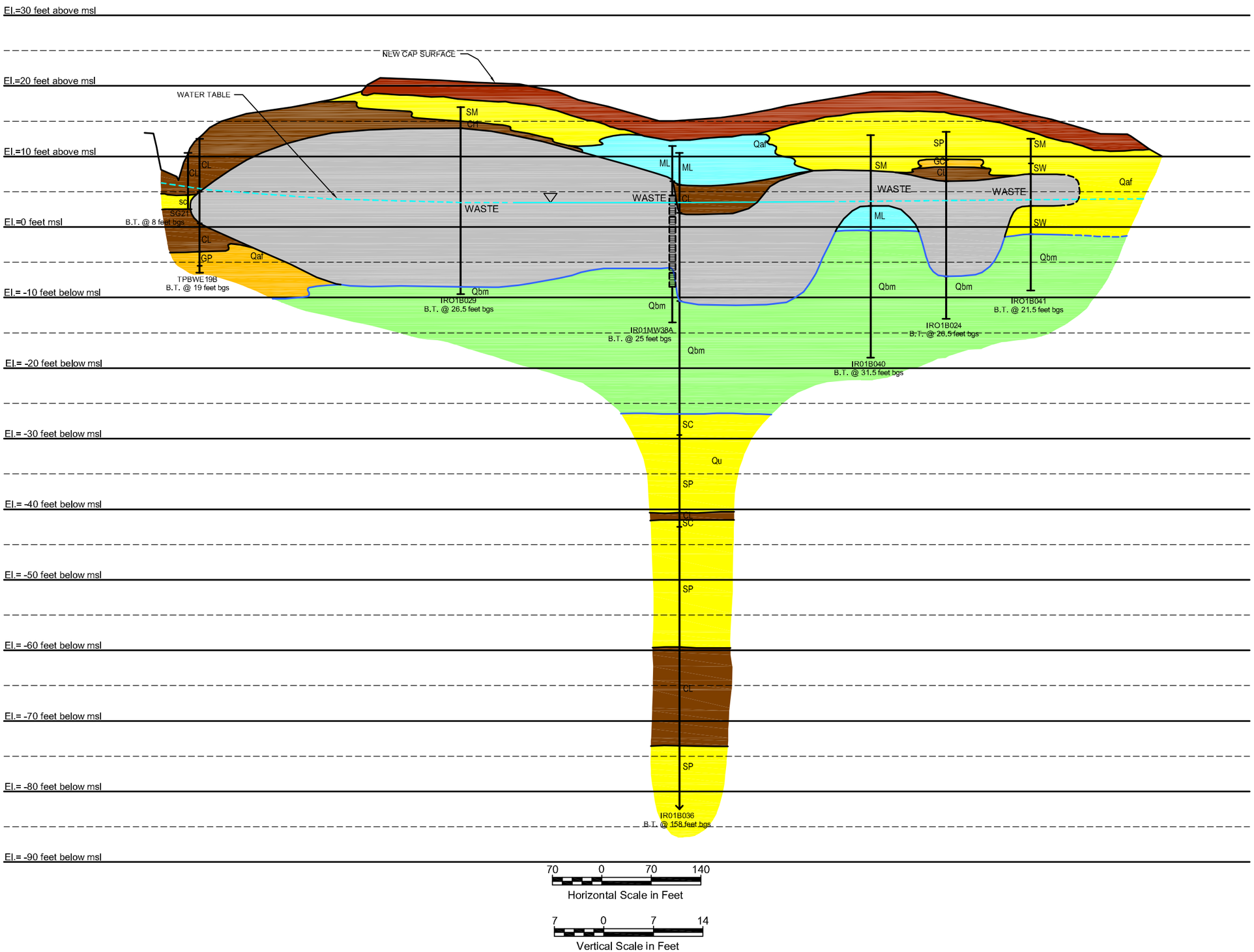

Water Table Based on Measurements on February 20, 2002. Water Level Shown is the A-Aquifer.

Storm Water Sewer Utility Line

Lithologic or Waste Boundary (dashed where inferred)

Formation Boundary (dashed where inferred)

Boring Log; Tic Marks Represent Changes in Lithology

Screened Area

Cap

Sand

Clay

Silt

Gravel

Bay Mud (clay)

Waste

Bedrock

BGS	Below Ground Surface
B.T.	Borehole Termination
CH	Highly Plastic Clay
CL	Sandy or Silty Clay
El.	Elevation
GC	Clayey Gravel
GM	Silty Gravel
GMP	Gas Monitoring Probe
GP	Poorly Graded Gravel
GW	Well-Graded Gravel
KJs	Shale Bedrock
KJsp	Serpentinite Bedrock
ML	Silt
MSL	Mean Sea Level
SC	Clayey Sand
SM	Silty Sand
SP	Poorly Graded Sand
SW	Well-Graded Sand
Qaf	Artificial Fill
Qbm	Bay Mud (clay)
Qu	Undifferentiated Upper Sands
Quus	Undifferentiated Sediments

Tetra Tech EM Inc.

Hunters Point Shipyard, San Francisco, California
U.S. Navy Southwest Division, NAVFAC, San Diego

FIGURE 9
CROSS SECTION F-F'

Parcel E Nonstandard Data Gaps Investigation
Landfill Gas Characterization

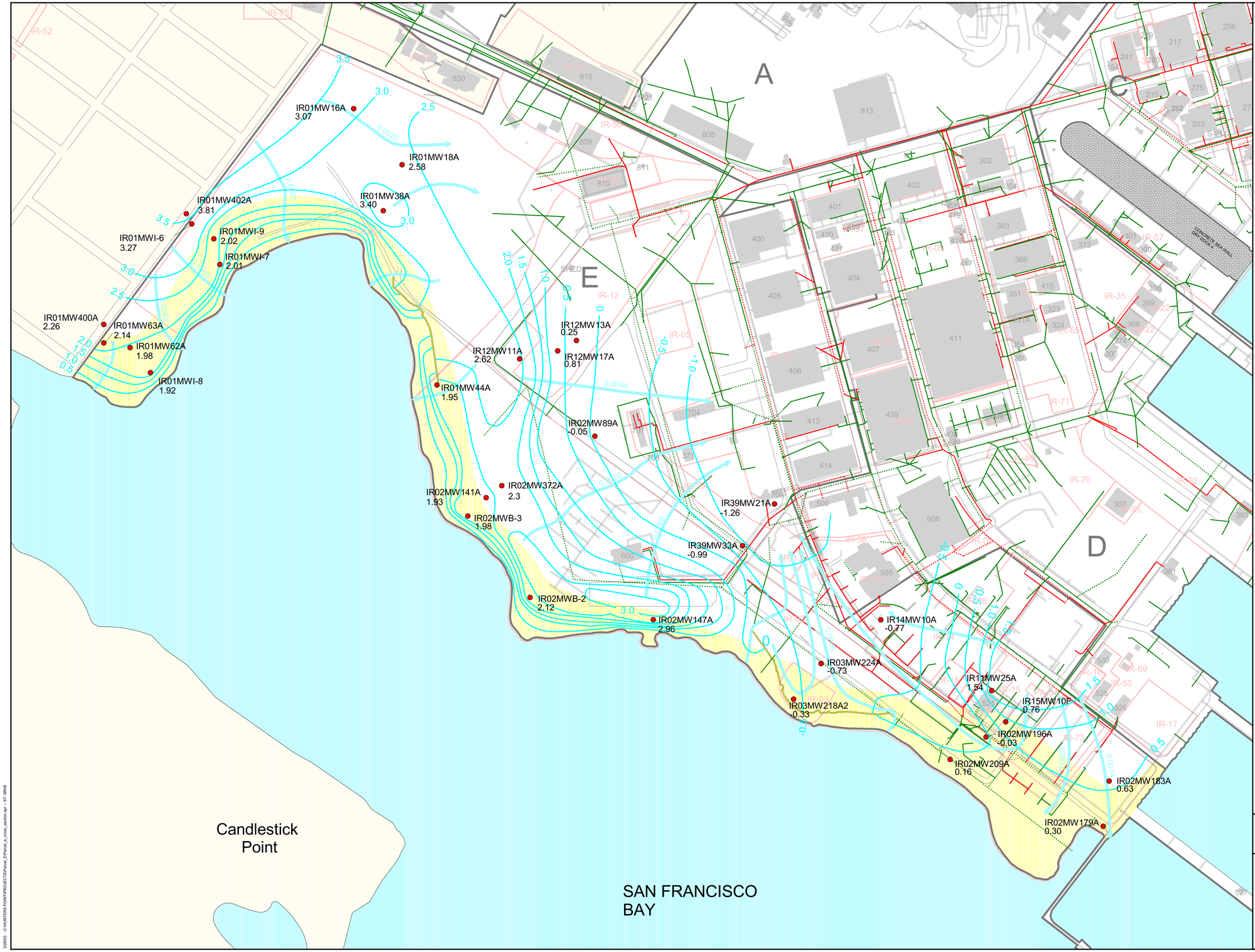

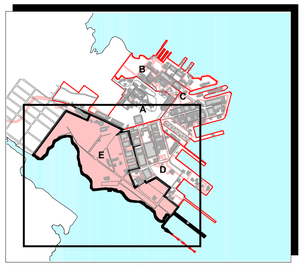

Location Map

Legend

- IR14MW10A -0.77 — A-aquifer Well Sampled for Mean Groundwater Elevations and Result (May 24, 2002)
- Flow Arrow and Gradient where Calculated
- A-aquifer Mean Groundwater Elevation Contour (May 24, 2002)
- Water Utility Line
- Storm Line-Above Groundwater
- Storm Line-Below Groundwater
- Sanitary Sewer-Above Groundwater
- Sanitary Sewer-Below Groundwater
- Roads
- Sheetpile Wall
- Building
- IR Site Boundary
- Tidal Influence Zone (Maximum Tidal Fluctuation ≥ 0.10 foot)
- Parcel Boundary
- San Francisco Bay
- Non-Navy Property

Note:

Mean Bay Water Level Elevation: 0.33 Feet Above Mean Sea Level (MSL)

400 0 400

Scale in Feet

Tetra Tech EM Inc.

HUNTERS POINT SHIPYARD
SAN FRANCISCO, CALIFORNIA
U.S. NAVY SOUTHWEST DIVISION, NAVFAC, SAN DIEGO

FIGURE 3-12
A-AQUIFER MEAN GROUNDWATER ELEVATIONS, PARCEL E, MAY 24, 2002

Draft Parcel E Groundwater Summary Report
Phase III Groundwater Data Gaps Investigation

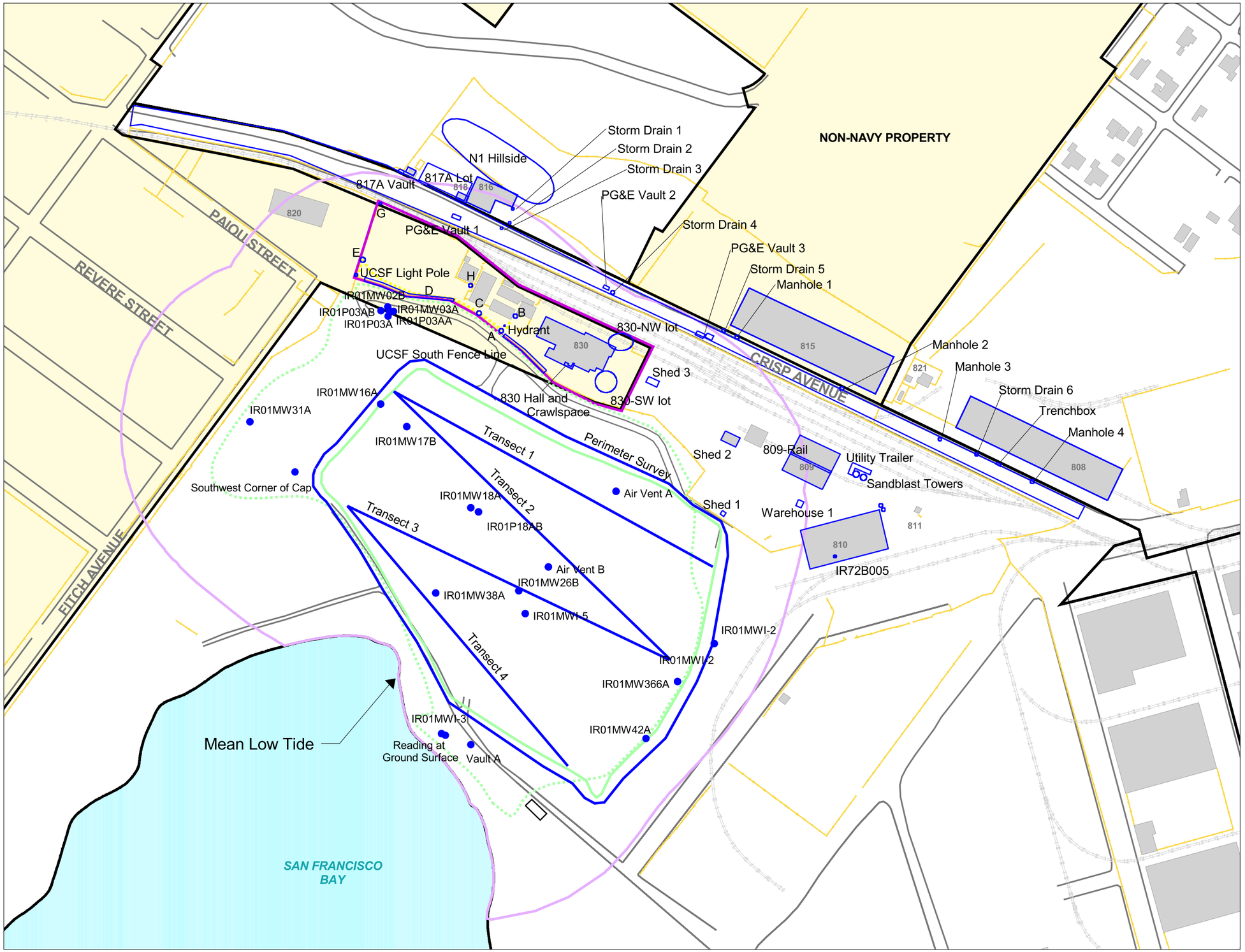

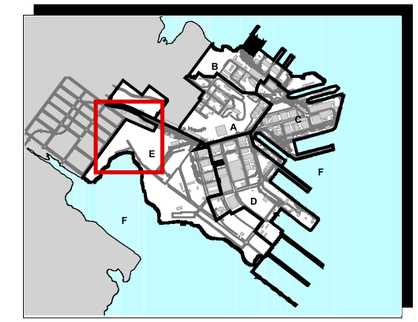

Location Map

- Ambient Air Survey Location
- Ambient Air Survey Location
- Subsurface Utility in UCSF Compound
- 300-Foot Perimeter
- Approximate Extent of Solid Waste
- Limit of Landfill Cap
- UCSF Compound
- Hunters Point Shipyard Boundary
- Building
- Fence
- Rail Line
- Road
- Non-Navy Property

Notes:
IR Installation Restoration
NW Northwest
PG&E Pacific Gas and Electric
SW Southwest
UCSF University of California, San Francisco

200 0 200 400 Feet

Scale in Feet

Tetra Tech EM Inc.

Hunters Point Shipyard, San Francisco, California
U.S. NAVY SOUTHWEST DIVISION NAVFAC, SAN DIEGO

FIGURE 11
AMBIENT AIR SURVEY LOCATIONS

Parcel E Nonstandard Data Gaps Investigation
Landfill Gas Characterization

12-18-2003 g:\hunters point\kimberlee\landfill gas characterization.apr TIEMI-SD KCH

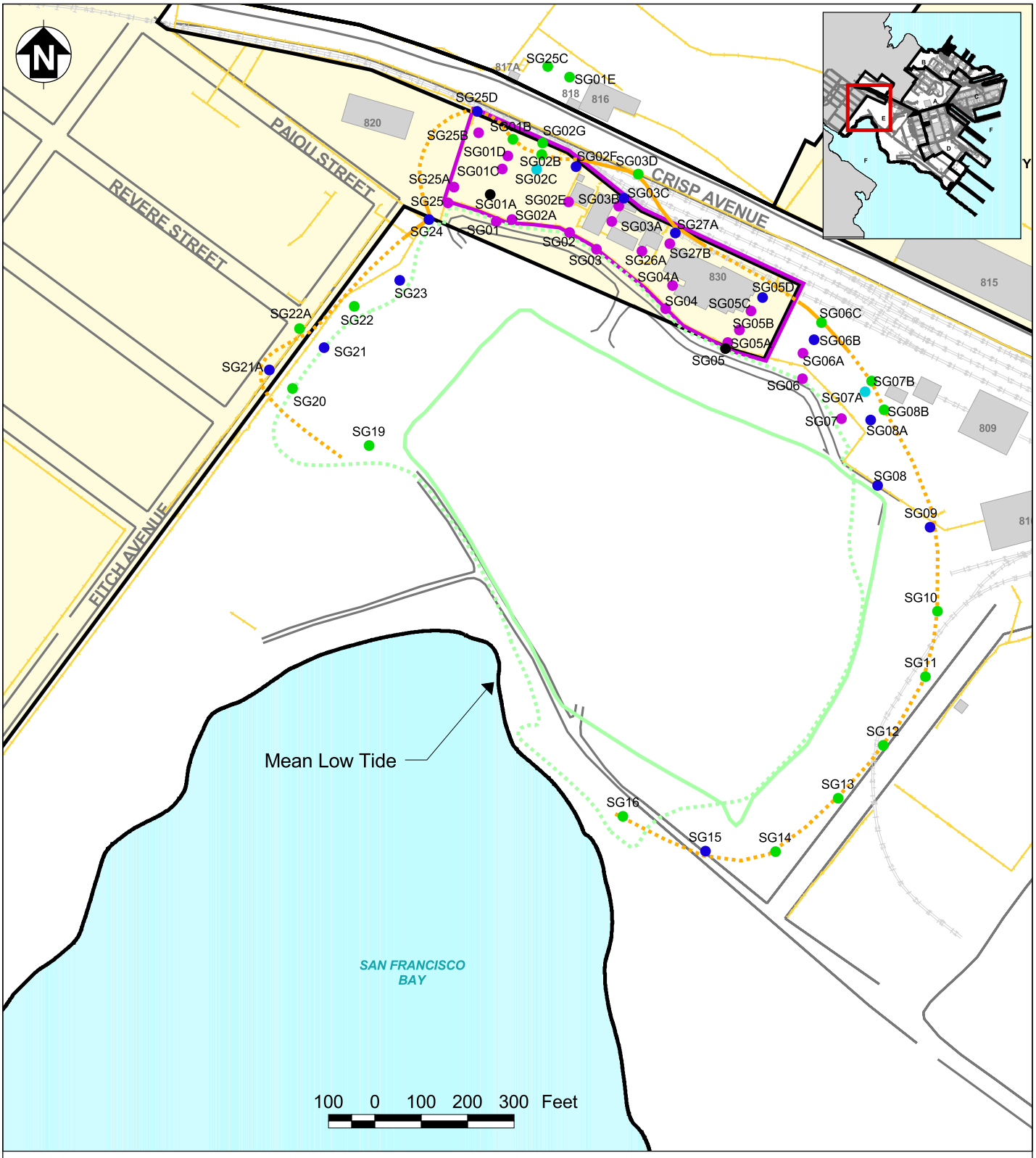

Soil-Gas Locations
- No Screening Conducted
- Not Detected
- LEL Less Than 25%
- LEL Equal To or Greater Than 25% and Less Than 100%
- LEL Equal To or Greater Than 100%
- Estimated Limit of Methane Detected During Soil-Gas Field Survey
- Limit of Methane Detected During Soil-Gas Field Survey

- Approximate Extent of Solid Waste
- Limit of Landfill Cap
- UCSF Compound
- Hunters Point Shipyard Boundary
- Building
- Fence
- Rail Line
- Road
- Non-Navy Property

Notes:
LEL Lower explosive limit
UCSF University of California, San Francisco

Tetra Tech EM Inc.

Hunters Point Shipyard, San Francisco, California
U.S. Navy Southwest Division, NAVFAC, San Diego

FIGURE 12
TEMPORARY SOIL-GAS BORING LOCATIONS

Parcel E Nonstandard Data Gaps Investigation
Landfill Gas Characterization

2003-12-18 g:\hunters point\landfill gas characteristics.extension TtEMI-SD KCH

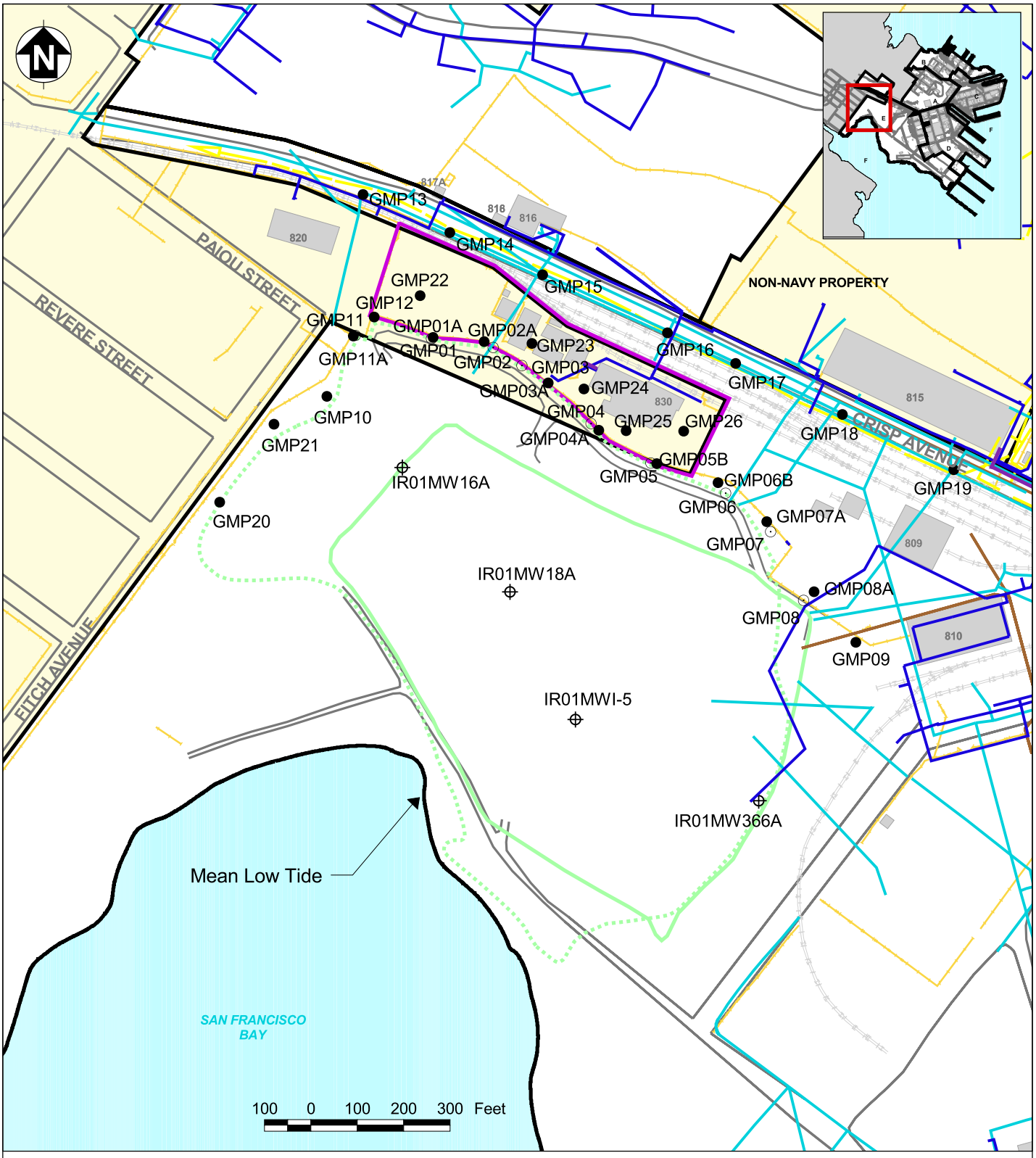

- Existing GMP Location
- Removed GMP Location
- Groundwater Monitoring Well Under Landfill Gas Monitoring Program
- Water Line
- Storm Water Line
- Steam Line
- Sanitary Sewer Line
- Electrical Line
- Approximate Extent of Solid Waste
- Limit of Landfill Cap
- UCSF Compound
- Hunters Point Shipyard Boundary
- Building
- Fence
- Rail Line
- Road
- Non-Navy Property

Notes:
GMP Gas monitoring probe
UCSF University of California, San Francisco

Tetra Tech EM Inc.

Hunters Point Shipyard, San Francisco, California
U.S. Navy Southwest Division, NAVFAC, San Diego

FIGURE 13
LANDFILL GAS MONITORING LOCATIONS (GMPs AND MONITORING WELLS)

Parcel E Nonstandard Data Gaps Investigation
Landfill Gas Characterization

2003-12-18 g:\hunters point\landfill gas characterization.extension TtEMI-SD KCH

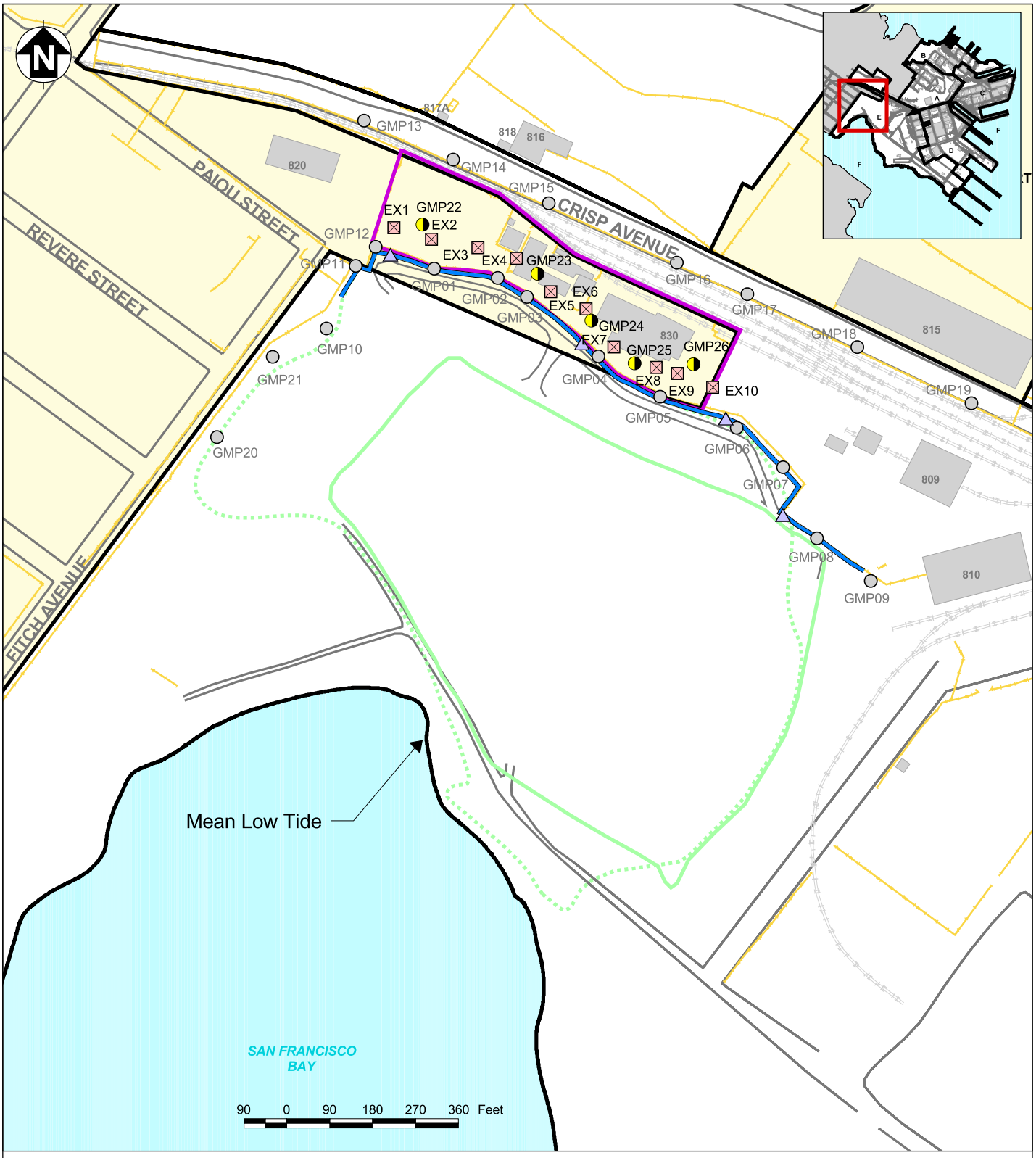

Passive Vent
GMP
UCSF Extraction Well
Additional GMP in UCSF Compound
Gund Curtain
Approximate Extent of Solid Waste
Limit of Landfill Cap

UCSF Compound
Hunters Point Shipyard Boundary
Building
Fence
Rail Line
Road
Non-Navy Property

Notes:
GMP Gas monitoring probe
UCSF University of California, San Francisco

Tetra Tech EM Inc.

Hunters Point Shipyard, San Francisco, California
U.S. Navy Southwest Division, NAVFAC, San Diego

FIGURE 14
GAS CONTROL SYSTEM FEATURES

Parcel E Nonstandard Data Gaps Investigation
Landfill Gas Characterization

2003-12-18 g:\hunters point\landfill gas characterization.extension TtEMI-SD KCH

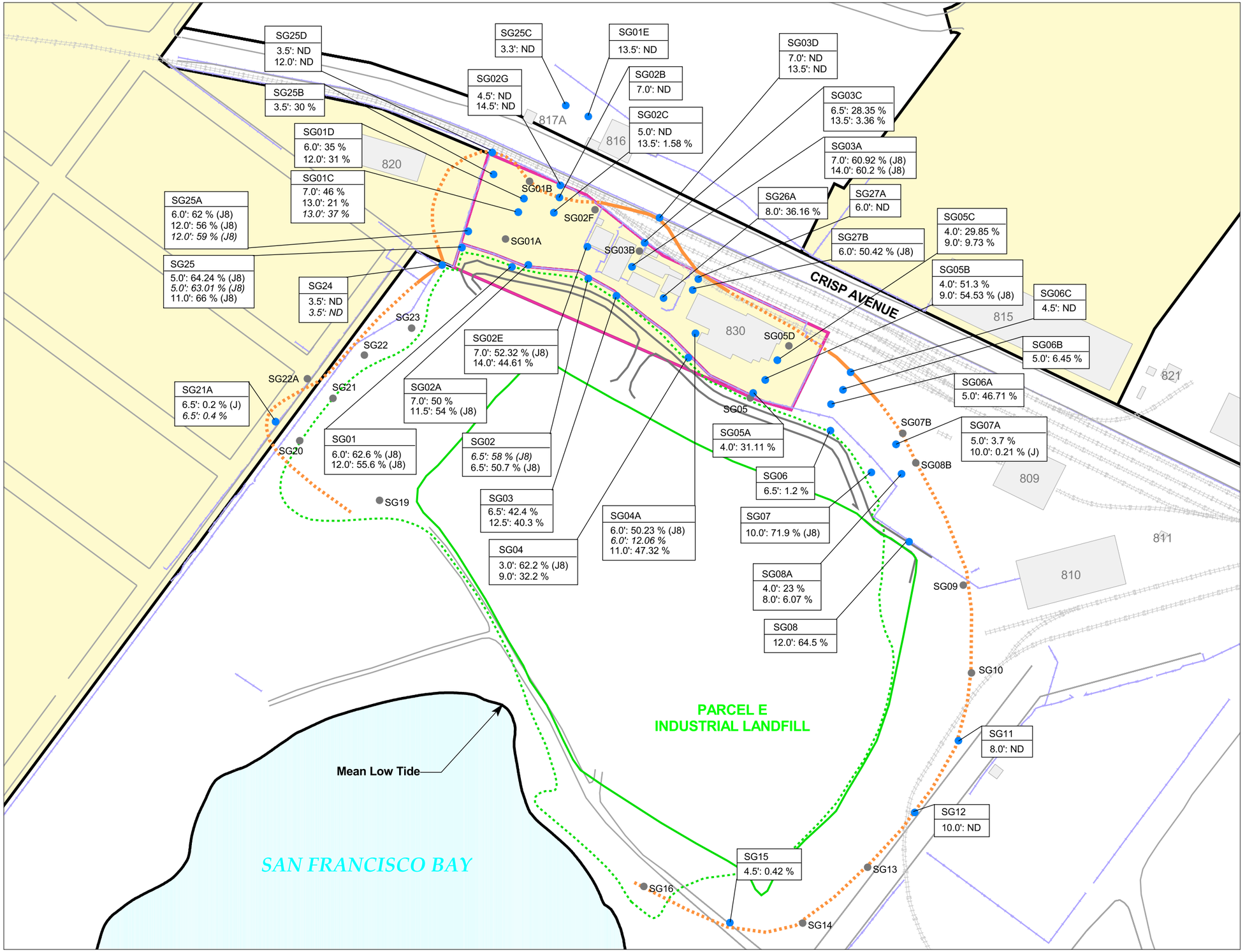

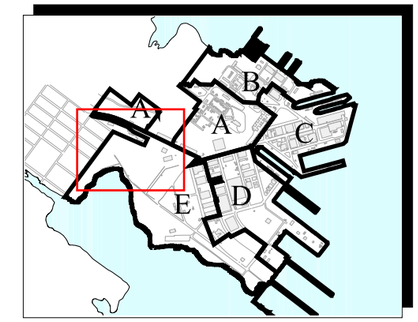

Location Map

Soil-Gas Collected with Summa®

SG27B
6.0': 50.42% (J8)

Sample Identification
Depth in feet: Percent Methane by Volume in Air (Qualifier) by EPA Method 3C

(Values in italics are for duplicate samples)

Soil-Gas Location
Limit of Methane Detected (Based on Laboratory Data)
Estimated Limit of Methane Detected (Based on Laboratory Data)
Approximate Extent of Solid Waste
Limit of Landfill Cap
Building
Rail Line
Road
Gravel Road
Fence
Hunters Point Shipyard Boundary
University of California, San Francisco Compound
Non-Navy Property

Notes:
EPA U.S. Environmental Protection Agency
J Estimated
J8 Calibration range problem
ND Not detected

N

100 0 100 200
Scale in Feet

Tetra Tech EM Inc.

Hunters Point Shipyard, San Francisco, California
U.S. Navy Southwest Division, NAVFAC, San Diego

FIGURE 15
METHANE LABORATORY DATA
(APRIL 2002 SOIL-GAS SURVEY)

Parcel E Nonstandard Data Gaps Investigation
Landfill Gas Characterization

12-01-2003 v:\hunters point\projects\parcel e non-standard data gaps\fig tech memo.apr TIEMI-SF kim.huynh

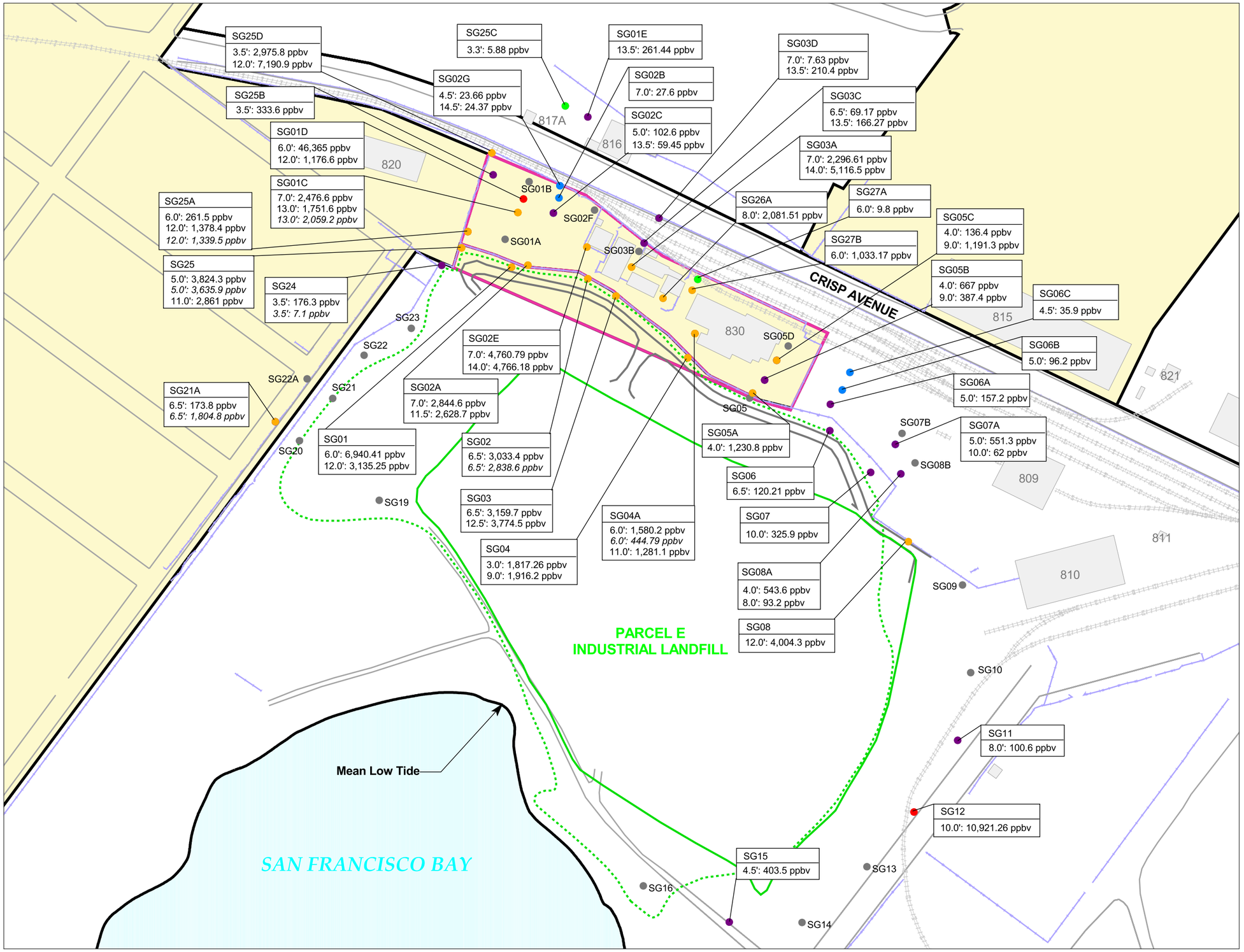

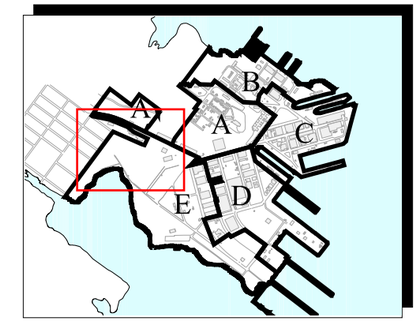

Location Map

Soil-Gas Collected with Summa ®
- Total VOCs > 10,000 ppbv
- 1,000 ppbv < Total VOCs < 10,000 ppbv
- 100 ppbv < Total VOCs < 1,000 ppbv
- 10 ppbv < Total VOCs < 100 ppbv
- Total VOCs < 10ppbv

SG06C
4.5': 35.9 ppbv

Sample Identification
Depth in feet: Total VOCs detected in parts per billion by volume by EPA Method TO-14

(Values in italics are for duplicate samples)

- Soil-Gas, No Summa ® Collected
- Approximate Extent of Solid Waste
- Limit of Landfill Cap
- Building
- Rail Line
- Road
- Gravel Road
- Fence
- Hunters Point Shipyard Boundary
- University of California, San Francisco Compound
- Non-Navy Property

Notes:
EPA U.S. Environmental Protection Agency
ppbv Parts per billion by volume
VOC Volatile organic compound

N

100 0 100 200

Scale in Feet

Tetra Tech EM Inc.

Hunters Point Shipyard, San Francisco, California
U.S. Navy Southwest Division, NAVFAC, San Diego

FIGURE 16
TOTAL NONMETHANE VOC LABORATORY DATA (APRIL 2002 SOIL-GAS SURVEY)

Parcel E Nonstandard Data Gaps Investigation
Landfill Gas Characterization

12-17-2003 v:\hunters point\projects\parcel e non-standard data gaps\lfg tech memo.apr TIEMI-SF kim.huynh

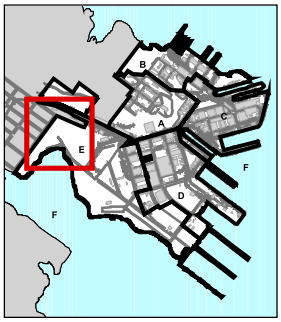

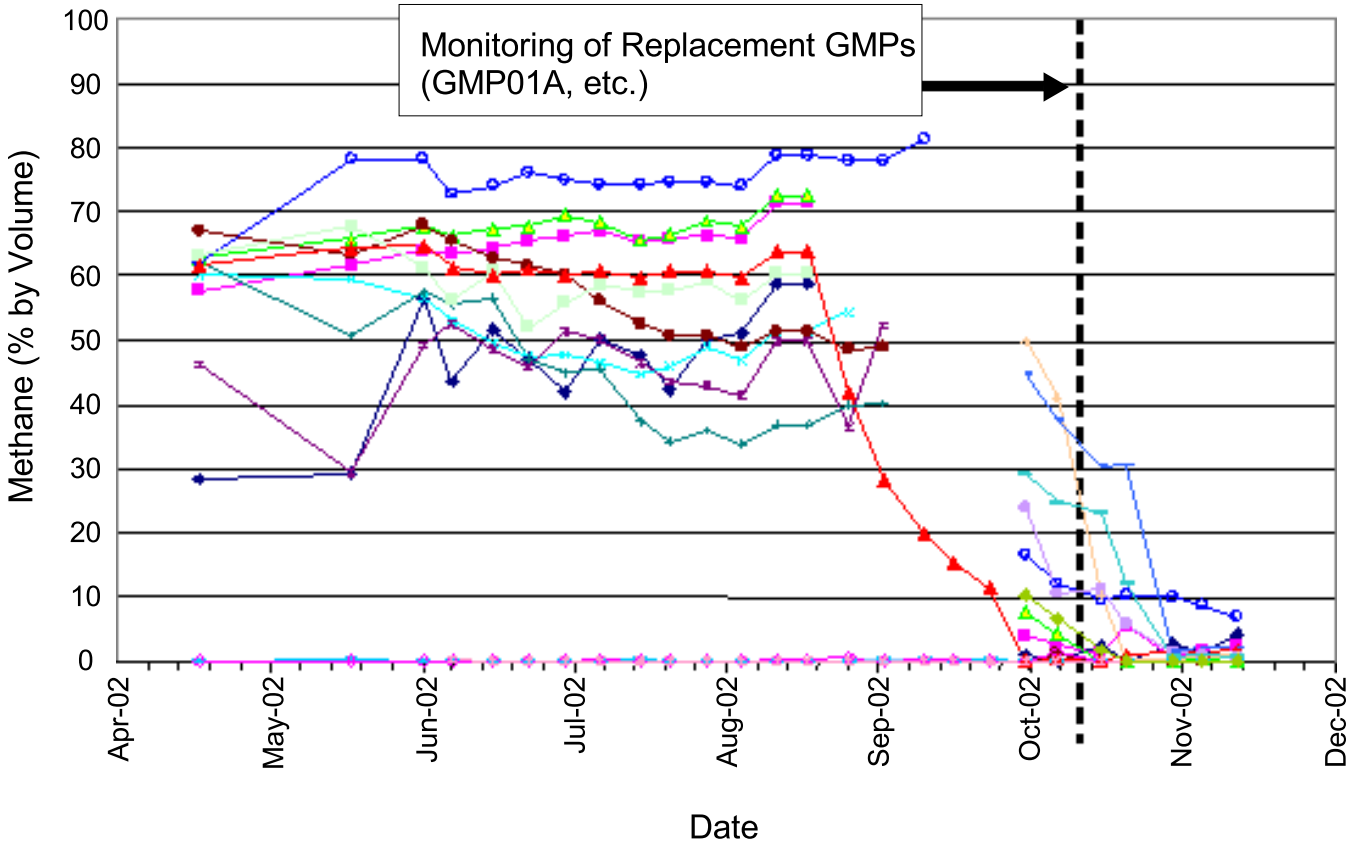

Notes:
GMP01 through GMP08 were removed during installation of barrier wall. Monitoring of replacement GMP01A through GMP04A and GMP06A through GMP08A began on October 2, 2002, GMP05A was damaged during construction and was monitored the following week after repairs. Replacement GMP11A was installed on November 25, 2002. GMP05A and GMP06A also were replaced on November 25 due to possible damage and obstruction of installation of new UCSF drainage pipe, respectively.
Methane was not detected at GMP13 through GMP19; therefore the methane concentration for these GMPs are not shown on the graph.
GMP Gas monitoring probe
UCSF University of California, San Francisco

- GMP01/01A
- GMP02/02A
- GMP03/03A
- GMP04/04A
- GMP05/05A/05B
- GMP06/06A/06B
- GMP07/07A
- GMP08/08A
- GMP09
- GMP10
- GMP11/11A
- GMP12
- GMP20
- GMP21
- GMP22
- GMP23
- GMP24
- GMP25
- GMP26

Tetra Tech EM Inc.

Hunters Point Shipyard, San Francisco, California
U.S. Navy Southwest Division, NAVFAC, San Diego

FIGURE 17
TIME VERSES CONCENTRATION FOR METHANE

Parcel E Nonstandard Data Gaps Investigation
Landfill Gas Characterization

2003-12-19 g:\hunters point\landfill gas characterization.extension TtEMI-SD KCH

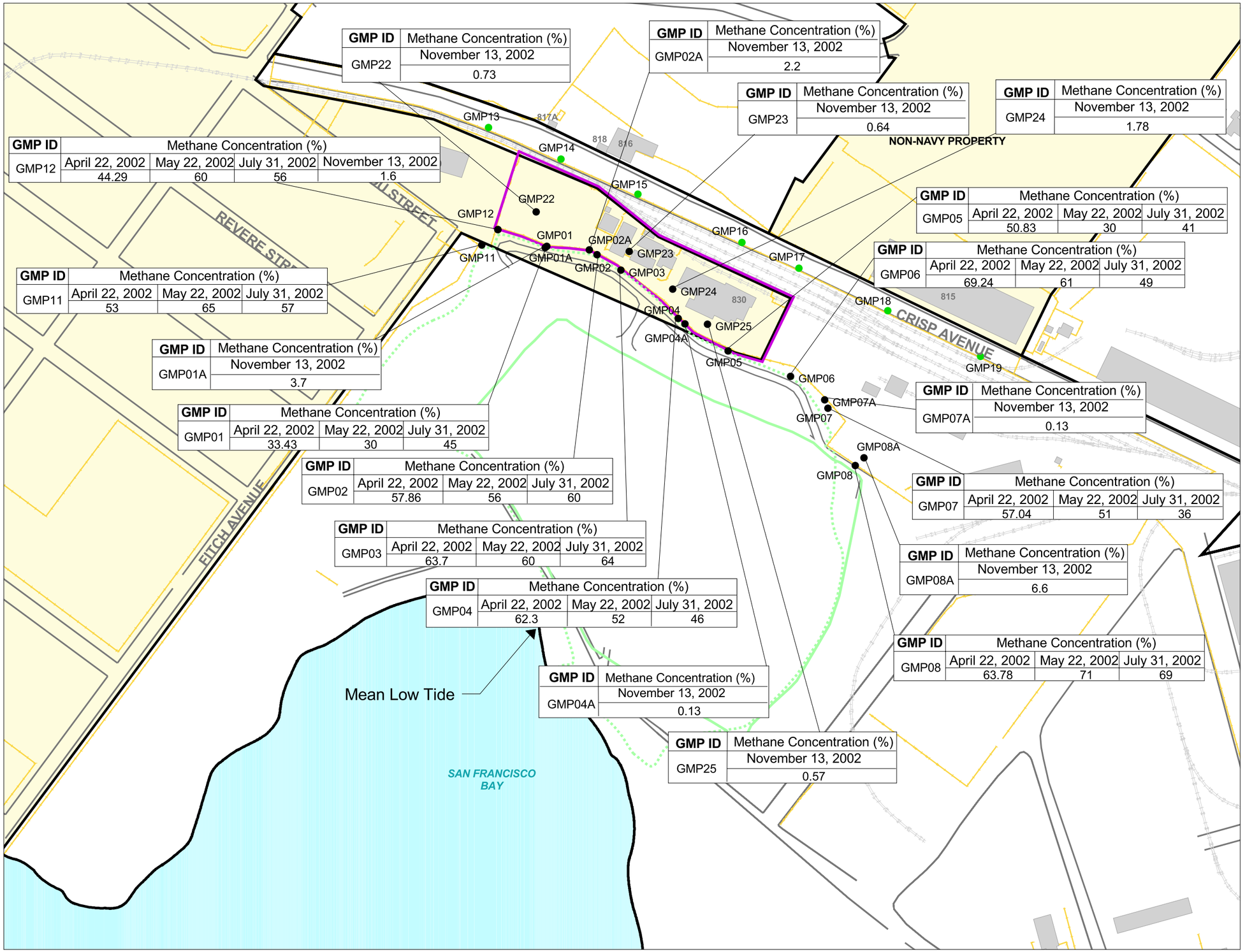

GMP ID	Methane Concentration (%)			
	April 22, 2002	May 22, 2002	July 31, 2002	November 13, 2002
GMP12	44.29	60	56	1.6

GMP ID	Methane Concentration (%)		
	April 22, 2002	May 22, 2002	July 31, 2002
GMP11	53	65	57

GMP ID	Methane Concentration (%)
	November 13, 2002
GMP01A	3.7

GMP ID	Methane Concentration (%)		
	April 22, 2002	May 22, 2002	July 31, 2002
GMP01	33.43	30	45

GMP ID	Methane Concentration (%)		
	April 22, 2002	May 22, 2002	July 31, 2002
GMP02	57.86	56	60

GMP ID	Methane Concentration (%)		
	April 22, 2002	May 22, 2002	July 31, 2002
GMP03	63.7	60	64

GMP ID	Methane Concentration (%)		
	April 22, 2002	May 22, 2002	July 31, 2002
GMP04	62.3	52	46

GMP ID	Methane Concentration (%)
	November 13, 2002
GMP04A	0.13

GMP ID	Methane Concentration (%)
	November 13, 2002
GMP25	0.57

GMP ID	Methane Concentration (%)
	November 13, 2002
GMP22	0.73

GMP ID	Methane Concentration (%)
	November 13, 2002
GMP02A	2.2

GMP ID	Methane Concentration (%)
	November 13, 2002
GMP23	0.64

GMP ID	Methane Concentration (%)
	November 13, 2002
GMP24	1.78

GMP ID	Methane Concentration (%)		
	April 22, 2002	May 22, 2002	July 31, 2002
GMP05	50.83	30	41

GMP ID	Methane Concentration (%)		
	April 22, 2002	May 22, 2002	July 31, 2002
GMP06	69.24	61	49

GMP ID	Methane Concentration (%)
	November 13, 2002
GMP07A	0.13

GMP ID	Methane Concentration (%)		
	April 22, 2002	May 22, 2002	July 31, 2002
GMP07	57.04	51	36

GMP ID	Methane Concentration (%)
	November 13, 2002
GMP08A	6.6

GMP ID	Methane Concentration (%)		
	April 22, 2002	May 22, 2002	July 31, 2002
GMP08	63.78	71	69

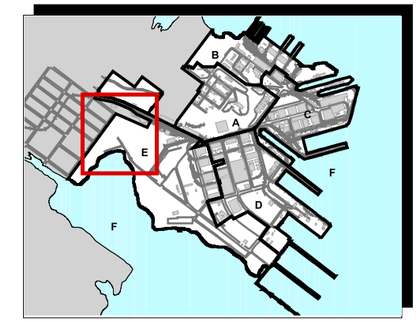

Location Map

- GMP
- GMP, Methane Not Detected (June 5, 2002)
- Approximate Extent of Solid Waste
- Limit of Landfill Cap
- UCSF Compound
- Hunters Point Shipyard Boundary
- Building
- Fence
- Rail Line
- Road
- Non-Navy Property

Notes:
GMP Gas monitoring probe
ID Identification
UCSF University of California, San Francisco

200 0 200 400 Feet

Scale in Feet

Tetra Tech EM Inc.

Hunters Point Shipyard, San Francisco, California
U.S. NAVY SOUTHWEST DIVISION NAVFAC, SAN DIEGO

FIGURE 18
GMP QUARTERLY MONITORING RESULTS FOR METHANE

Parcel E Nonstandard Data Gaps Investigation
Landfill Gas Characterization

12-18-2003 g:\hunters point\landfill gas characterization.apr TIEMI-SD KCH

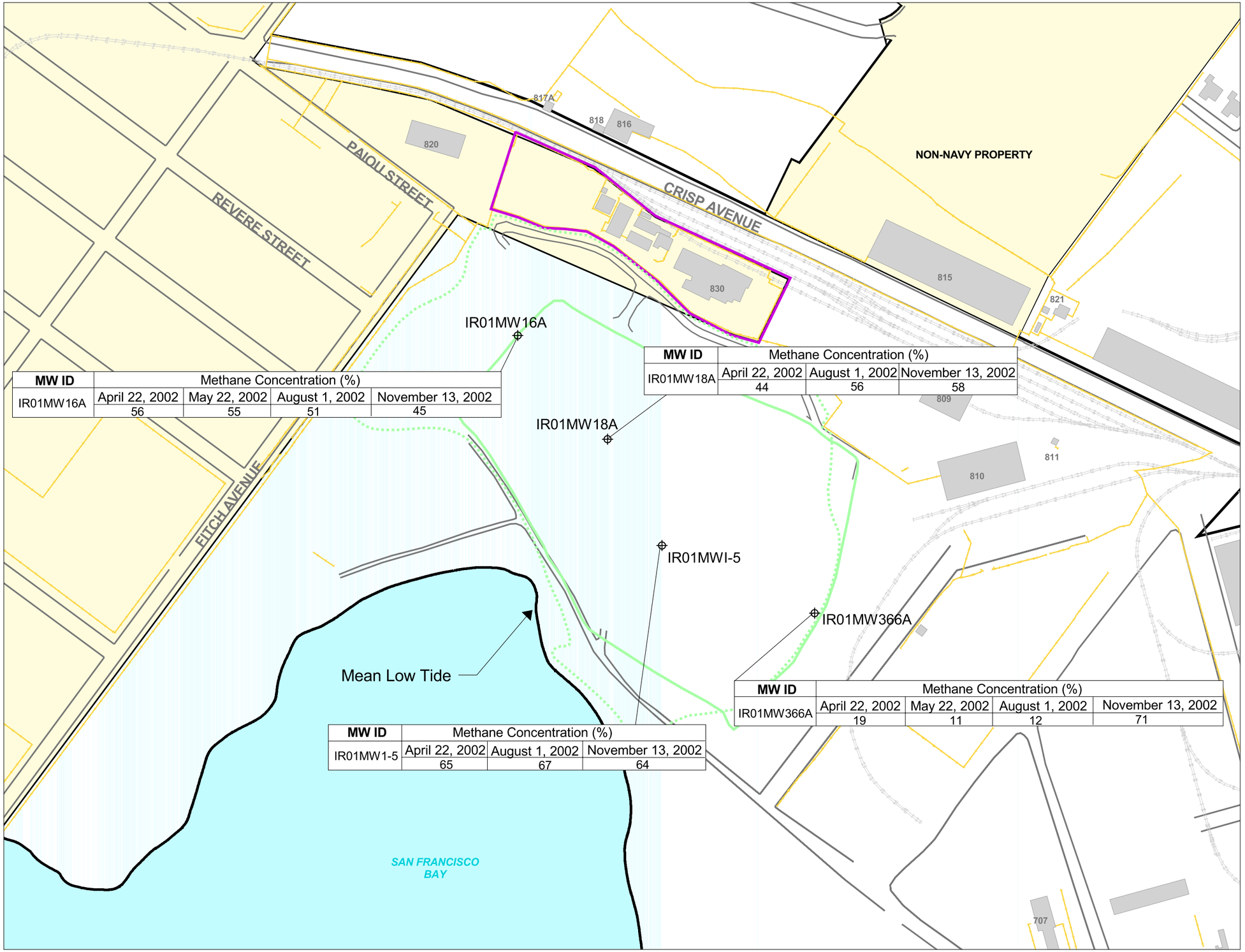

MW ID	Methane Concentration (%)			
IR01MW16A	April 22, 2002	May 22, 2002	August 1, 2002	November 13, 2002
	56	55	51	45

MW ID	Methane Concentration (%)		
IR01MW18A	April 22, 2002	August 1, 2002	November 13, 2002
	44	56	58

MW ID	Methane Concentration (%)		
IR01MW1-5	April 22, 2002	August 1, 2002	November 13, 2002
	65	67	64

MW ID	Methane Concentration (%)			
IR01MW366A	April 22, 2002	May 22, 2002	August 1, 2002	November 13, 2002
	19	11	12	71

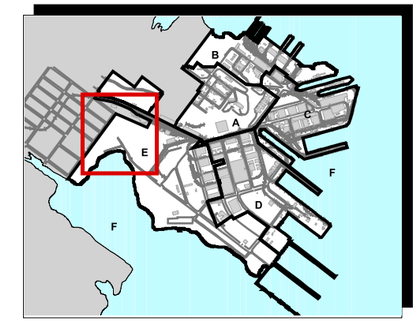

Location Map

- IR-01/21 Monitoring Wells
- Approximate Extent of Solid Waste
- Limit of Landfill Cap
- UCSF Compound
- Hunters Point Shipyard Boundary
- Building
- Fence
- Rail Line
- Road
- Non-Navy Property

Notes:
ID Identificarion
IR Installation Restoration
MW Monitoring well
UCSF University of California, San Francisco

200 0 200 Feet
Scale in Feet

Tetra Tech EM Inc.

Hunters Point Shipyard, San Francisco, California
U.S. NAVY SOUTHWEST DIVISION NAVFAC, SAN DIEGO

FIGURE 19
QUARTERLY METHANE RESULTS FOR MONITORING WELLS
Parcel E Nonstandard Data Gaps Investigation
Landfill Gas Characterization

12-18-2003 g:\hunters point\landfill gas characterization.apr TIEMI-SD KCH

TABLES

TABLE 1: ANALYTICAL AND FIELD SCREENING METHODS

Parcel E Nonstandard Data Gaps Investigation, Landfill Gas Characterization, Hunters Point Shipyard, San Francisco, California

Task	Location	Media	Analyte	Instrument/ Analytical Test	Method
On-Site Monitoring	Landfill cap, cap perimeter, wells, vents, and vaults	Ambient air	VOCs and LEL (methane)	Concentration: PID and CGI	Conducted in the field in accordance with SOP No. 003 and GT Series Operator's Manual
On-Site Monitoring (for locations where methane was detected or locations that were identified as sensitive areas)	Light pole and Building 830 crawlspace	Ambient air	VOCs, TNMHC, methane, oxygen, carbon dioxide, nitrogen, and carbon monoxide	Presence and concentration (collected in Summa® Canister)	Ananlyses conducted at the laboratory included EPA Methods TO-14A, 25C, and 3C
Off-Site Monitoring	Buildings, crawlspaces, and utility vaults	Soil gas and ambient air	VOCs and LEL (methane)	Concentration: PID and CGI	Conducted in the field in accordance with SOP No. 003 and GT Series Operator's Manual
Soil-Gas Survey	Landfill perimeter and step-out locations	Soil gas	Methane and nonmethane VOCs	Concentration: GEM 2000 and PID	Conducted in the field in accordance with SOP No. 003 and GEM 2000 Operation Manual
Soil-Gas Survey (for locations where PID readings exceeded 5 ppm over background or methane readings exceeded 25 percent of the LEL)	Landfill perimeter and step-out locations	Soil gas	VOCs, TNMHC, methane, oxygen, carbon dioxide, nitrogen, and carbon monoxide	Presence and concentration (collected in Summa® Canister)	Ananlyses conducted at the laboratory included EPA Methods TO-14A, 25C, and 3C
Initial GMP Monitoring	GMPs and groundwater wells on the cap that have screened sections above the water table	Soil gas	Methane, pressure, and temperature; VOCs; and water level	Concentration: GEM 2000, PID, and water level meter	Conducted in the field in accordance with SOP No. 003, SOP No. 014, and GEM 2000 Operation Manual

Notes:

CGI	Combustible gas indicator
EPA	U.S. Environmental Protection Agency
GMP	Gas monitoring probe
LEL	Lower explosive limit
PID	Photoionization detector
ppm	Parts per million
SOP	Standard operating procedure
TNMHC	Total nonmethane hydrocarbons
TO-14A	Toxic Organic-14A
VOC	Volatile organic compound

Sources:

EPA. 2000. "Guidance for Data Quality Assessment, Practical Methods for Data Analysis, EPA QA/G9, QA00 Update." EPA 600/R-96/084. Office of Environmental Information. July.

Tetra Tech EM Inc. 2002a. "Field Sampling Plan/Quality Assurance Project Plan (FSP/QAPP) for Parcel E Nonstandard Data Gaps Investigation (Industrial Landfill and Wetlands Delineation), Hunters Point Shipyard, San Francisco, California." January 8.

TABLE 2: GMP CONSTRUCTION SPECIFICATIONS

Parcel E Nonstandard Data Gaps Investigation, Landfill Gas Characterization, Hunters Point Shipyard, San Francisco, California

GMP Location Number	Temporary Soil-Gas Location	Date Installed	Total Drilled Depth (feet bgs)	Screen Interval (feet bgs)	Filter Pack (feet bgs)	Bentonite Seal (feet bgs)	Concrete Seal (feet bgs)
GMP01	SG01	04/15/02	14	6.0 to 13.5	5.0 to 14.0	3.0 to 5.0	0 to 3.0
GMP01A	---	09/12/02	13.5	6.0 to 13.5	5.0 to 14.0	2.0 to 5.0	0 to 2.0
GMP02	SG02	04/15/02	14	6.0 to 13.5	5.0 to 14.0	3.0 to 5.0	0 to 3.0
GMP02A	---	09/12/02	13.5	6.0 to 13.5	5.0 to 14.0	2.0 to 5.0	0 to 2.0
GMP02A	---	09/12/02	13.5	6.0 to 13.5	5.0 to 14.0	2.0 to 5.0	0 to 2.0
GMP03	SG03	04/15/02	14	6.0 to 13.5	5.0 to 14.0	3.0 to 5.0	0 to 3.0
GMP03A	---	09/12/02	13.5	6.0 to 13.5	5.0 to 14.0	2.0 to 5.0	0 to 2.0
GMP04	SG04	04/15/02	14	6.0 to 13.5	5.0 to 14.0	3.0 to 5.0	0 to 3.0
GMP04A	---	09/12/02	13.5	6.0 to 13.5	5.0 to 14.0	2.0 to 5.0	0 to 2.0
GMP05	SG05	04/15/02	14	6.0 to 12.5	5.0 to 14.0	3.0 to 5.0	0 to 3.0
GMP05A	---	09/12/02	12.5	6.0 to 12.5	5.0 to 13.0	2.0 to 5.0	0 to 2.0
GMP06	SG06	04/15/02	14	6.0 to 13.5	5.0 to 14.0	3.0 to 5.0	0 to 3.0
GMP06A	---	09/12/02	13.5	6.0 to 13.5	5.0 to 14.0	2.0 to 5.0	0 to 2.0
GMP07	SG07	04/15/02	14	6.0 to 13.5	5.0 to 14.0	3.0 to 5.0	0 to 3.0
GMP07A	---	09/12/02	13.5	6.0 to 13.5	5.0 to 14.0	2.0 to 5.0	0 to 2.0
GMP08	SG08	04/16/02	13	6.0 to 12.5	5.0 to 13.0	3.0 to 5.0	0 to 3.0
GMP08A	---	09/12/02	12.5	6.0 to 12.5	5.0 to 13.0	3.0 to 5.0	0 to 3.0
GMP09	SG09	04/16/02	10	6.0 to 9.5	5.0 to 10.0	3.0 to 5.0	0 to 3.0
GMP10	SG23	04/15/02	7	4.0 to 6.5	3.0 to 7.0	2.0 to 3.0	0 to 2.0
GMP11	SG24	04/15/02	6	4.0 to 5.5	3.0 to 6.0	2.0 to 3.0	0 to 2.0
GMP12	SG25	04/15/02	13.5	5.0 to 13.0	4.0 to 13.5	2.0 to 4.0	0 to 2.0
GMP13	---	05/31/02	19.5	6.0 to 12.0	5.0 to 13.0	2.0 to 5.0	0 to 2.0
GMP14	---	05/31/02	10.5	6.0 to 10.0	5.0 to 10.5	2.0 to 5.0	0 to 2.0
GMP15	---	05/31/02	12.5	6.0 to 12.0	5.0 to 12.5	2.0 to 5.0	0 to 2.0
GMP16	---	05/31/02	10.5	5.0 to 10.0	4.0 to 10.5	2.0 to 4.0	0 to 2.0
GMP17	---	05/31/02	10.5	6.0 to 10.0	5.0 to 10.5	2.0 to 5.0	0 to 2.0
GMP18	---	05/31/02	13.5	6.0 to 12.0	5.0 to 13.0	2.0 to 5.0	0 to 2.0
GMP19	---	05/31/02	5.5	4.5 to 5.5	4.0 to 5.5	2.0 to 4.0	0 to 2.0
GMP20	SG20	06/07/02	7	3.5 to 4.5	3.0 to 5.0	1.5 to 3.0	0 to 1.5

TABLE 2: GMP CONSTRUCTION SPECIFICATIONS (Continued)

Parcel E Nonstandard Data Gaps Investigation, Landfill Gas Characterization, Hunters Point Shipyard, San Francisco, California

GMP Location Number	Temporary Soil-Gas Location	Date Installed	Total Drilled Depth (feet bgs)	Screen Interval (feet bgs)	Filter Pack (feet bgs)	Bentonite Seal (feet bgs)	Concrete Seal (feet bgs)
GMP21	SG21-SG22	06/07/02	7	3.5 to 4.0	3.0 to 4.5	1.0 to 3.0	0 to 1.0
GMP22	---	09/12/02	13.5	6.0 to 13.5	5.0 to 14.0	2.0 to 5.0	0 to 2.0
GMP22	---	09/11/02	13.5	6.0 to 13.5	5.0 to 14.0	2.0 to 5.0	0 to 2.0
GMP23	---	09/11/02	13.5	6.0 to 13.5	5.0 to 14.0	2.0 to 5.0	0 to 2.0
GMP24	---	09/11/02	13.5	6.0 to 13.0	5.0 to 13.5	2.0 to 5.0	0 to 2.0
GMP25	---	09/11/02	12.0	6.5 to 11.5	5.0 to 12.0	2.0 to 5.0	0 to 2.0
GMP26	---	09/11/02	12.0	6.5 to 11.5	5.0 to 12.0	2.0 to 5.0	0 to 2.0

Notes: All GMPs were installed using hollow-stem auger drilling methods and 5.5-inch-diameter augers. Each probe was completed using 0.75-inch-diameter 0.010-slot schedule 40 polyvinyl chloride screen and blank casing. Filter packs consisted of No. 2/16 Monterey sand.

--- Not applicable
bgs Below ground surface
GMP Gas monitoring probe

TABLE 3: AMBIENT AIR SURVEY FIELD SCREENING DATA

Parcel E Nonstandard Data Gaps Investigation, Landfill Gas Characterization, Hunters Point Shipyard, San Francisco, California

Location	Location Description	Date	Percent Lower Explosive Limit[a]
Perimeter of Landfill Cap	0 to 6 inches above ground surface	4/17/02	0
Transect 1 Across Landfill Cap	0 to 6 inches above ground surface	4/17/02	0
Transect 2 Across Landfill Cap	0 to 6 inches above ground surface	4/17/02	0
Transect 3 Across Landfill Cap	0 to 6 inches above ground surface	4/17/02	0
Transect 4 Across Landfill Cap	0 to 6 inches above ground surface	4/17/02	0
IR01MW42A	Outside of well	2/26/02	0
IR01MW42A	Inside of well	2/26/02	0
IR01MW366A	Outside of well	2/26/02	0
IR01MW366A	At lip of cap	2/26/02	2
IR01MW366A	Inside well; inner casing open	2/26/02	100
IR01MWI-2	Outside of well	2/26/02	0
IR01MWI-2	At lip of cap	2/26/02	1
IR01MWI-2	Inside well	2/26/02	70
Air Vent A	Outside of vent	2/26/02	0
Air Vent A	At lip of cap	2/26/02	30
Air Vent A	Inside vent	2/26/02	100
Air Vent B	Outside of vent	2/26/02	0
Air Vent B	At lip of cap	2/26/02	100
Air Vent B	Inside vent	2/26/02	2
IR01MW26B	Outside of well	2/26/02	0
IR01MW26B	At lip of cap	2/26/02	3
IR01MW26B	Inside well	2/26/02	26
IR01MWI-5	Outside of well	2/26/02	0
IR01MWI-5	At lip of cap	2/26/02	50
IR01MWI-5	Inside well	2/26/02	>100
IR01MW38A	Outside, within 1 foot of casing	2/26/02	1
IR01MW38A	At lip of cap	2/26/02	>100
IR01P18AB	Outside of well	2/26/02	0
IR01P18AB	At lip of cap	2/26/02	15
IR01P18AB	Inside well	2/26/02	100
IR01MW18A	Outside near well	2/26/02	100
IR01MW18A	At lip of cap	2/26/02	>100
IR01MW17B	Outside	2/26/02	0
IR01MW17B	At lip of cap	2/26/02	50
IR01MW17B	Inside well	2/26/02	100
IR01MW16A	Outside of well	2/26/02	0
IR01MW16A	At lip of cap	2/26/02	>100
IR01MW16A	Inside well	2/26/02	>100
IR01MW31A	Outside of well	2/26/02	0
IR01MW31A	At lip of cap	2/26/02	0
IR01MW31A	Inside well (no casing lid)	2/26/02	0
IR01P03A	At lip of cap	2/26/02	0
IR01P03AA	At lip of cap	2/26/02	0
IR01MW03A	Inside well	2/26/02	0
IR01P03AB	At lip of cap	2/26/02	0
IR01MW02B	At lip of cap	2/26/02	0
IR01MWI-3	At lip of inner casing	2/26/02	0
IR01MWI-3	Inside well	2/26/02	>20[b]
Landfill Cap Perimeter	0 to 3 inches above ground surface	2/26/02	0
Landfill Cap	Southwestern corner of cap, within 20-foot radius	2/26/02	0
Vicinity of IR01MWI-3	10 feet southwest of IR01MWI-3	2/26/02	0

TABLE 3: AMBIENT AIR SURVEY FIELD SCREENING DATA (Continued)

Parcel E Nonstandard Data Gaps Investigation, Landfill Gas Characterization, Hunters Point Shipyard, San Francisco, California

Location	Location Description	Date	Percent Lower Explosive Limit[a]
Vault A	At hole on vault lid	2/26/02	>20[b]
Electrical Substation	Ambient and ground surface	2/26/02	0
Building 809	Flat slab-on-grade; one door open, no wind inside, and no subsurface features. Rail line runs through the building in east-west direction. Building was surveyed on transects of 20-foot grids.	3/4/02	0
Building 809	Rail line in Building 809	3/4/02	0
Utility Trailer	In front of Building 809, sits 2 feet above ground; surveyed perimeter and crawlspace	3/4/02	0
Sandblast Towers (two)	Next to utility trailer; sandblast grit observed inside the towers is brown	3/4/02	0
Warehouse 1	Shed south of Building 809; surveyed ambient air and floor	3/4/02	0
Storage Shed 1	Steel unit 30 feet north of cap, contains empty oil drums; surveyed crawlspace	3/4/02	0
Storage Shed 2	No subsurface features; surveyed inside	3/4/02	0
Storage Shed 3	Quanza hut; surveyed ambient air and floor	3/4/02	0
Building 808	Large open-space building; one subgrade feature (rail line) 4 feet deep; surveyed floor	3/4/02	0
Building 815	Large building; surveyed basement and ground floor	3/4/02	0
Building 830	UCSF hallway and back room	3/4/02	0
Building 830	At southwestern end of parking lot which is south of Building 830	3/4/02	0
Building 830	At northwestern end of parking lot, including underground sump (possibly sewer discharge) and subgrade utility lines	3/4/02	0
UCSF South Fenceline	South of Building 830	3/4/02	0
UCSF South Fenceline	Location A	3/4/02	18
UCSF South Fenceline	Fire hydrant 2	3/4/02	0
Near Shed	Location B	3/4/02	37
UCSF South Fenceline	Location C	3/4/02	5
UCSF South Fenceline	Location D and westward to location E	3/4/02	0
UCSF South Fenceline	Location E	3/4/02	0
UCSF South Fenceline	Location F (by telephone pole)	3/4/02	>100
UCSF South Fenceline	Location G (by northwest telephone pole)	3/4/02	0
UCSF South Fenceline	Location H (telephone pole by kennel)	3/4/02	0
Building 817A Vault	Deep, possibly underground pipe	3/5/02	0
Building 817A	Building did not have number; "816" was spray-painted on front; surveyed perimeter at ground-to-building interface and at small 1-inch-diameter hole in back wall	3/5/02	0
Building 817A Lot	East of Building 817A; surveyed ambient air and floor	3/5/02	0
Building N1	Possibly Building 816 (footprint is not found); welded shut; surveyed ambient air, perimeter, and ground-to-building interface	3/5/02	0
Storm Drain 1	Storm drain just south of N1	3/5/02	0
N1 Hillside	Surveyed hillside and two ponds; ambient air and at floor	3/5/02	0
Storm Drain 2	Storm drain just south of Building N1	3/5/02	0
Storm Drain 3	Storm drain just south of Building N1	3/5/02	0
Crisp Avenue	On south side of a fence, from the north to south end of the fence (Spear Street); surveyed 2 inches above ground	3/5/02	0
PG&E Vault 1	Along Crisp Avenue	3/5/02	0
PG&E Vault 2	Along Crisp Avenue	3/5/02	0
Storm Drain 4	Along Crisp Avenue	3/5/02	0
PG&E Vault 3	Along Crisp Avenue	3/5/02	0

TABLE 3: AMBIENT AIR SURVEY FIELD SCREENING DATA (Continued)

Parcel E Nonstandard Data Gaps Investigation, Landfill Gas Characterization, Hunters Point Shipyard, San Francisco, California

Location	Location Description	Date	Percent Lower Explosive Limit[a]
Vault 1	Along Crisp Avenue	3/5/02	0
Storm Drain 5	Along Crisp Avenue	3/5/02	0
Manhole 1	Along Crisp Avenue	3/5/02	0
Manhole 2	Along Crisp Avenue; VOCs measured at 4 parts per million[b]	3/5/02	0
Manhole 3	Along Crisp Avenue	3/5/02	0
Storm Drain 6	Along Crisp Avenue	3/5/02	0
Trenchbox	Along Crisp Avenue	3/5/02	0
Manhole 4	Along Crisp Avenue	3/5/02	0
Building 810	Flat slab-on-grade, usually locked; miscellaneous office and furniture supplies are stored inside	3/6/02	0
IR72B005	Old boring filled with concrete inside of Building 810	3/6/02	0
Storm Drain 1	East of Building 817A; surveyed ambient air and floor	3/6/02	0
Manhole 1	Possibly Building 816 (footprint is not found); welded shut; surveyed ambient air, perimeter, and ground-to-building interface	3/6/02	0
UCSF South Fenceline	South of Building 830	3/29/02	0
UCSF South Fenceline	Location A	3/29/02	0
UCSF South Fenceline	Location C	3/29/02	0
UCSF South Fenceline	Location D and westward to location E	3/29/02	0
UCSF South Fenceline	Location E	3/29/02	0
UCSF South Fenceline	Location F (by telephone pole)	3/29/02	0
Light Pole at UCSF	Ground surface	3/29/02	0
Building 830	Crawlspace	4/3/02	0
Light Pole at UCSF	Ground surface	4/5/02	0
Light Pole at UCSF	Ground surface	4/25/02	20
Building 830	Crawlspace	4/25/02	0

Notes:

a As read on a combustible gas indicator or converted from a flame ionization detector and pertains to methane.
b Nonmethane VOCs as read on a photoionization detector

IR Installation Restoration
MW Monitoring well
PG&E Pacific Gas and Electronic Company
UCSF University of California, San Francisco
VOC Volatile organic compound

TABLE 4: LABORATORY RESULTS FOR AMBIENT AIR SURVEYS AT UCSF LIGHT POLE AND BUILDING 830 CRAWLSPACE

Parcel E Nonstandard Data Gaps Investigation, Landfill Gas Characterization, Hunters Point Shipyard, San Francisco,

Sample Identification Number: Point Name: Date: Sample Location: Sample Type:	Preliminary Remediation Goal ($\mu g/m^3$)	SGLPSG001 SGLP 4/3/2002 UCSF Light Pole Ambient Air		SGCSSG001 SGCS 4/3/2002 Building 830 Crawlspace Ambient Air		SGFBSG008 FIELD BLANK 4/3/2002 --- Ambient Air		SGLPSG002 SGLP 8/1/2002 UCSF Light Pole Ambient Air		SGCSSG002 SGCS 6/5/2002 Building 830 Crawlspace Ambient Air		SGLPSG003 SGLP 11/13/2002 UCSF Light Pole Ambient Air		SGCSSG003 SGCS 8/1/2002 Building 830 Crawlspace Ambient Air		GMPFB003 FIELD BLANK 6/5/2002 --- Ambient Air		SGCSSG004 SGCS 11/13/2002 Building 830 Crawlspace Ambient Air		GMPFB005 FIELD BLANK 11/13/2002 --- Ambient Air	
EPA Method 25C (ppmv)																					
Methane	N/A	0.14	U	580		250		300		230		1	U2	40		2		20		2	
Nonmethane VOCs	N/A	0.14	U	13.7	U	0.1	U	0.16		0.16		5.1		0.16	U	0.2	U	6		0.1 U	U
EPA Method 3C (%)																					
Carbon Dioxide	NA	0.14	U2	0.1	J	0.1	J	0.16	U	0.16	U	0.13	U	0.16	U	0.2	U	0.13	U	0.1 U	U
Carbon Monoxide	NA	0.14	U	0.14	U	0.1	U	0.16	U	0.16	U	0.13	U	0.16	U	0.2	U	0.13	U	0.1 U	U
Methane	NA	0.14	U	0.1	J	0.1	U	0.16	U	0.16	U	0.13	U	0.16	U	0.2	U	0.13	U	0.1 U	U
Nitrogen	NA	81.03		81.48		78		80		80		82		81		80		82		82	
Oxygen	NA	18.95	J8	19.5	J8	22		20		19		18		18		19		18		18	
EPA TO-14A ($\mu g/m^3$)																					
1,1,1-Trichloroethane	2,300	7	U	19	U	4	U	9	U	4	U	7	U	9	U	5	U	7	U	4	U
1,1,2,2-Tetrachloroethane	0.033	8	J	24	U	5	U	11	U	5	U	9	U	11	U	6	U	9	U	5	U
1,1,2-Trichloro-1,2,2-trifluoroethane	N/A	19		27	U	5	U	12	U	5	U	10	U	12	U	6	U	10	U	5	U
1,1,2-Trichloroethane	0.12	7	U	19	U	4	U	9	U	4	U	7	U	9	U	5	U	7	U	4	U
1,1-Dichloroethane	520	6	U	14	U	3	U	7	U	3	U	5	U	7	U	3	U	5	U	3	U
1,1-Dichloroethylene	210	5	U	14	U	3	U	6	U	3	U	5	U	6	U	3	U	5	U	3	U
1,2,4-Trichlorobenzene	18	10	U	26	U	5	U	12	U	6	U	10	U	12	U	6	U	10	U	5	U
1,2,4-Trimethylbenzene	6.2	12	U2	17	U	6		8	U	4	U	6	U	4	J	4	U	6	U	3	U
1,2-Dibromoethane	0.0087	11	U	27	U	5	U	13	U	6	U	10	U	13	U	6	U	10	U	5	U
1,2-Dichloro-1,1,2,2-Tetrafluoroethane	NA	6	J	24	U	5	U	11	U	6	U	9	U	11	U	6	U	9	U	5	U
1,2-Dichlorobenzene	210	14	U2	21	U	4	U	10	U	5	U	8	U	10	U	5	U	8	U	4	U
1,2-Dichloroethane	0.074	6	U	14	U	3	U	7	U	3	U	5	U	7	U	3	U	5	U	3	U
1,2-Dichloropropane	0.099	6	U	16	U	3	U	8	U	4	U	6	U	8	U	4	U	6	U	3	U
1,3,5-Trimethylbenzene	6.2	7	J	17	U	3	U	8	U	4	U	6	U	8	U	4	U	6	U	3	U
1,3-Butadiene	0.0069	3	U	8	U	2	U	4	U	2	U	3	U	4	U	2	U	3	U	2	U
1,3-Dichlorobenzene	3.3	11	U2	21	U	4	U	10	U	5	U	8	U	10	U	5	U	8	U	4	U
1,4-Dichlorobenzene	0.31	14	U2	21	U	4	U	10	U	5	U	8	U	10	U	5	U	8	U	4	U
1,4-Dioxane	0.61	5	U	13	U	2	U	6	U	3	U	5	U	6	U	3	U	5	U	2	U
2-Butanone	1,000	5	U	10	U4	2	U	5	U	4	U4	4	U	10	U4	8	U4	4	U	2	U
2-Hexanone	NA	6	UJ7	14	U	3	U	7	U	3	U	5	U	7	U	3	U	5	U	3	U
4-Ethyltoluene	NA	6		15	U	3	U	7	U	4	U	6	U	7	U	4	U	6	U	3	U
4-Methyl-2-Pentanone	NA	6	U	14	U	3	U	7	U	3	U	5	U	7	U	3	U	5	U	3	U
Acetone	370	24	U2	29	U4	7	U4	39		14		9	U4	46	U4	31		51		14	U4
Benzene	0.23	3	J	11	U	2	U	5	U	3		4	U	5	U	3	U	4	U	2	U
Benzyl Chloride	0.04	7	U	18	U	4	U	8	U	4	U	7	U	8	U	4	U	7	U	4	U
Bromodichloromethane	0.11	9	U	23	U	5	U	11	U	5	U	9	U	11	U	6	U	9	U	5	U
Bromoform	1.7	14	U	36	U	7	U	17	U	9	U	14	U	17	U	9	U	14	U	7	U
Bromomethane	5.2	5	U	14	U	3	U	6	U	3	U	5	U	6	U	3	U	5	U	3	U
Carbon Disulfide	730	6	U2	11	U	2	U	5	U	3	U	4	U	16	U	19		6	U2	2	
Carbon Tetrachloride	0.13	9	U	22	U	4	U	10	U	5	U	8	U	10	U	5	U	8	U	4	U
Chlorobenzene	62	6	U	16	U	3	U	8	U	4	U	6	U	8	U	4	U	6	U	3	U
Chloroethane	2.3	4	U	9	U	2	U	4	U	2	U	3	U	4	U	2	U	3	U	2	U
Chloroform	3.1	7	U	17	U	3	U	8	U	4	U	6	U	8	U	4	U	6	U	3	U
Chloromethane	1.1	4	U2	3	J	1	U	2	J	2	U	3	U2	2	J	2		3	U2	3	
cis-1,2-Dichloroethene	37	5	U	14	U	3	U	6	U	3	U	5	U	6	U	3	U	5	U	3	U
cis-1,3-Dichloropropene	0.48	6	U	16	U	3	U	7	U	4	U	6	U	7	U	4	U	6	U	3	U
Cyclohexane	21,000	5	U	12	U	2	U	6	U	3	U	5	U	9	U	3		5	U	2	U
Dibromochloromethane	0.08	12	U	30	U	6	U	14	U	7	U	11	U	14	U	7	U	11	U	6	U
Dichlorodifluoromethane	210	7	U2	9	J	4		6	J	6		7	U2	5	J	4		7	U2	6	

TABLE 4: LABORATORY RESULTS FOR AMBIENT AIR SURVEYS AT UCSF LIGHT POLE AND BUILDING 830 CRAWLSPACE (Continued)
Parcel E Nonstandard Data Gaps Investigation, Landfill Gas Characterization, Hunters Point Shipyard, San Francisco,

Sample Identification Number: Point Name: Date: Sample Location: Sample Type:	Preliminary Remediation Goal ($\mu g/m^3$)	SGLPSG001 SGLP 4/3/2002 UCSF Light Pole Ambient Air		SGCSSG001 SGCS 4/3/2002 Building 830 Crawlspace Ambient Air		SGFBSG008 FIELD BLANK 4/3/2002 --- Ambient Air		SGLPSG002 SGLP 8/1/2002 UCSF Light Pole Ambient Air		SGCSSG002 SGCS 6/5/2002 Building 830 Crawlspace Ambient Air		SGLPSG003 SGLP 11/13/2002 UCSF Light Pole Ambient Air		SGCSSG003 SGCS 8/1/2002 Building 830 Crawlspace Ambient Air		GMPFB003 FIELD BLANK 6/5/2002 --- Ambient Air		SGCSSG004 SGCS 11/13/2002 Building 830 Crawlspace Ambient Air		GMPFB005 FIELD BLANK 11/13/2002 --- Ambient Air	
EPA TO-14A ($\mu g/m^3$) (Continued)																					
Ethanol	NA	450	U2	6	J	1		3	U	3		2	U	14		2	U	71	U2	65	
Ethylbenzene	1.7	4	J	15	U	3	U	7	U	4	U2	6	U	7	U	4		6	U	3	U
Heptane	NA	6	U2	14	U	3	U	7	U	5	U2	5	U	7	U	11		5	U	3	U
Hexachlorobutadiene	0.086	15	U	37	U	7	U	17	U	9	UJ7	14	U	17	U	9	UJ7	14	U	7	U
Hexane	210	NA	U	NA	J	2	U	4	J	7	U2	5	U	3	J	230		5	U	2	U
Isopropyl Alcohol	NA	43	U2	9	U	10		4	U	2	U	3	U	4	U	2	U	3	U	2	U
m,p-Xylenes	110 [1]	8	U2	19		5	U4	6	J	5	U2	3	J	10		10		6	J	3	U
Methylene Chloride	4.1	14	U4	28	U4	4		6	U4	3	U4	8	U4	6	U4	300		11	U4	8	U4
Methyl-Tert Butyl Ether	19	5	U	13	U	4		6	U	3	UJ3	5	U	6	U	4	UJ3	5	U	3	U
o-Xylene	110 [1]	4	J	7	J	3	U1	7		4	U2	6	U2	7		3		6	U2	1	
Propylene	NA	2	U2	9		3	U	4	U	4	U	2	U	5	U	4	U	2	U	3	U
Styrene	1,100	6	U	15	U	2	U	7	U	3	U	6	U	7	U	3	U	6	U	2	U
t-1,2-Dichloroethylene	73	5	U	14	U	5	U	6	U	3	U	6	U	6	U	3	U	5	U	5	U
t-1,3-Dichloropropene	0.48	6	U	16	U	2	U	7	U	4	U	7	U	7	U	2	U	6	U	2	U
Tetrachloroethylene	0.67	9	U	12	J	3		11	J	3	U2	9	U	11		73		9	U2	3	
Tetrahydrofuran	0.99	4	U	10	U	3	U	5	U	2	U	4	U	5	U	3	U	4	U	3	U
Toluene	400	6	U2	10	J	3	U	5	U	24	U	5	U	8	U	4	U	6	U	3	U
Trichloroethene	0.017	7	U	19	U	4	U	9	U	4	U	7	U	9	U	5	U	7	U	4	U
Trichlorofluoromethane	730	8	U2	20	U	4	U	9	U	5	U	7	U	9	U	5	U	7	U	4	U
Vinyl Acetate	210	5	U	12	U	2	U	6	U	3	U	5	U	6	U	3	U	5	U	2	U
Vinyl Chloride	0.11	4	U	9	U	2	U	4	U	2	U	3	U	4	U	2	U	3	U	2	U

Notes: EPA Method 25C initially analyzes for methane and then converts all of the nonmethane VOCs to methane and reports them as nonmethane VOCs as methane.

1 The preliminary remediation goal shown is for total xylenes.

--- Not applicable
$\mu g/m^3$ Micrograms per cubic meter
EPA U.S. Environmental Protection Agency
NMOC Nonmethane organic compound
NA Not available
ppmv Parts per million by volume
TO-14A Toxic Organics-14A
UCSF University of California, San Francisco
VOC Volatile organic compound

Qualifiers and Comment Codes:
J Estimated
J8 Calibration range problems
U Nondetected (numerical value is the reporting limit)
U2 Field blank problems
U4 Laboraboty contaminant
UJ7 Calibration problems

Source:
EPA. 2000. "Guidance for Data Quality Assessment, Practical Methods for Data Analysis, EPA QA/G9, QA00 Update." EPA 600/R-96/084. Office of Environmental Information. July.

TABLE 5: SOIL-GAS SURVEY FIELD SCREENING DATA

Parcel E Nonstandard Data Gaps Investigation, Landfill Gas Characterization, Hunters Point Shipyard, San Francisco, California

Location Identification Number	Sample Depth (feet bgs)[a]	Methane (percent volume in air)	Percent of Lower Explosive Limit	VOCs[b] (ppm)	Trigger for Sample Collection	Sample Identification Number	Step-Out (Y/N)	Step-Out Location
SG01	6.0	66.9	1,338	0.0	Methane	SG01SG001	Y	SG01A
SG01	12.0	56.6	1,132	0.5	Methane	SG01SG002	Y	SG01A
SG01A	NA	NA	NA	NA	NA	NA	Y	SG01C
SG01B	4.0	0.0	0	4.3	NA	NA	Y	SG01E
SG01B	10.0	0.0	0	0.0	NA	NA	Y	SG01E
SG01C	7.0	50.3	1,006	1.1	Methane	SG01SG003	Y	SG01D
SG01C	13.0	15.1	302	7.6	Methane and VOCs	SG01SG004	Y	SG01D
SG01D	6.0	43.3	866	15.7	Methane and VOCs	SG01SG006	Y	SG01B
SG01D	12.0	32.6	652	0.0	Methane	SG01SG007	Y	SG01B
SG01E	7.5	0.0	0	3.8	NA	NA	N	
SG01E	13.5	0.0	0	5.5	VOCs	SG01SG008	N	
SG02	6.5	67.4	1348	0.0	Methane	SG02SG009	Y	SG02E
SG02	12.5	65.3	1306	1.1	Methane	SG02SG010	Y	SG02E
SG02A	7.0	54.0	1080	0.4	Methane	SG02SG001	Y	SG02C
SG02A	11.5	60.1	1202	0.7	Methane	SG02SG002	Y	SG02C
SG02B	7.0	0.0	0	5.1	VOCs	SG02SG003	Y	SG02G
SG02B	13.5	0.0	0	3.9	NA	NA	Y	SG02G
SG02C	5.0	0.5	10	5.0	VOCs	SG02SG004	Y	SG02B
SG02C	13.5	2.4	48	0.7	Methane	SG02SG005	Y	SG02B
SG02E	7.0	66.6	1,332	1.2	Methane	SG02SG006	Y	SG02F
SG02E	14.0	57.0	1,140	2.3	Methane	SG02SG007	Y	SG02F
SG02F	7.0	0.2	4	0.7	NA	NA	N	
SG02F	14.0	1.1	22	2.4	NA	NA	N	
SG02G	4.5	0.0	0	0.0	Field Confirmation	SG02SG011	N	
SG02G	14.5	0.0	0	0.5	Field Confirmation	SG02SG012	N	
SG03	6.5	69.7	1,394	0.3	Methane	SG03SG005	Y	SG03A
SG03	12.5	60.0	1,200	0.0	Methane	SG03SG006	Y	SG03A
SG03A	7.0	78.6	1,572	1.4	Methane	SG03SG001	Y	SG03B
SG03A	14.0	83.9	1,678	1.5	Methane	SG03SG002	Y	SG03B
SG03B	NA	NA	NA	NA	NA	NA	Y	SG03C

TABLE 5: SOIL-GAS SURVEY FIELD SCREENING DATA (Continued)

Parcel E Nonstandard Data Gaps Investigation, Landfill Gas Characterization, Hunters Point Shipyard, San Francisco, California

Location Identification Number	Sample Depth (feet bgs)[a]	Methane (percent volume in air)	Percent of Lower Explosive Limit	VOCs[b] (ppm)	Trigger for Sample Collection	Sample Identification Number	Step-Out (Y/N)	Step-Out Location
SG03C	6.5	19.7	394	0.0	Methane	SG03SG003	Y	SG03D
SG03C	13.5	3.2	64	0.0	Methane	SG03SG004	Y	SG03D
SG03D	7.0	0.0	0	0.0	Field Confirmation	SG03SG007	N	
SG03D	13.5	0.0	0	0.7	Field Confirmation	SG03SG008	N	
SG04	3.0	68.4	1,368	0.0	Methane	SG04SG001	Y	SG04A
SG04	9.0	16.4	328	1.2	Methane	SG04SG002	Y	SG04A
SG04A	6.0	63.0	1,260	0.6	Methane	SG04SG003	Y	SG27B
SG04A	11.0	32.8	656	1.0	Methane	SG04SG005	Y	SG27B
SG05	NA	NA	NA	NA	NA	NA	NA	
SG05A	4.0	74.7	1,494	0.0	Methane	SG05SG001	Y	SG05B
SG05B	4.0	59.8	1,196	0.0	Methane	SG05SG002	Y	SG05C
SG05B	9.0	51.1	1,022	0.0	Methane	SG05SG003	Y	SG05C
SG05C	4.0	43.8	876	0.0	Methane	SG05SG004	Y	SG05D
SG05C	9.0	39.4	788	0.0	Methane	SG05SG005	Y	SG05D
SG05D	5.0	0.0	0	2.6	NA	NA	N	
SG05D	10.0	0.3	6	2.9	NA	NA	N	
SG06	6.5	45.9	918	0.1	Methane	SG06SG001	Y	SG06A
SG06A	5.0	50.0	1,000	0.0	Methane	SG06SG002	Y	SG06B
SG06B	5.0	5.0	100	0.0	Methane	SG06SG003	Y	SG06C
SG06C	4.5	NA	NA	1.6	Instrument malfunction	SG06SG004	N	
SG06C	9.0	0.0	0	1.3	NA	NA	N	
SG07	5.5	0.0	0	1.3	NA	NA	Y	SG07A
SG07	10.0	75.2	1,504	0.0	Methane	SG07SG001	Y	SG07A
SG07A	5.0	3.9	78	0.2	Methane	SG07SG002	Y	SG07B
SG07A	10.0	0.9	18	0.6	Methane	SG07SG003	Y	SG07B
SG07B	3.0	0.0	0	0.9	NA	NA	N	
SG08	8.0	0.1	2	2.2	NA	NA	Y	SG08A
SG08	12.0	10.4	208	0.0	Methane	SG08SG001	Y	SG08A
SG08A	4.0	17.0	340	0.0	Methane	SG08SG002	Y	SG08B
SG08A	8.0	9.4	188	0.0	Methane	SG08SG003	Y	SG08B

TABLE 5: SOIL-GAS SURVEY FIELD SCREENING DATA (Continued)

Parcel E Nonstandard Data Gaps Investigation, Landfill Gas Characterization, Hunters Point Shipyard, San Francisco, California

Location Identification Number	Sample Depth (feet bgs)[a]	Methane (percent volume in air)	Percent of Lower Explosive Limit	VOCs[b] (ppm)	Trigger for Sample Collection	Sample Identification Number	Step-Out (Y/N)	Step-Out Location
SG08B	5.0	0.0	0	1.8	NA	NA	N	
SG09	6.5	0.2	4	0.0	NA	NA	N	
SG09	10.0	0.0	0	0.1	NA	NA	N	
SG10	3.0	0.0	0	2.9	NA	NA	N	
SG10	7.0	0.0	0	3.2	NA	NA	N	
SG11	5.0	0.0	0	3.9	NA	NA	N	
SG11	8.0	0.0	0	229.8	VOCs	SG11SG001	N	
SG12	5.0	0.0	0	0.1	NA	NA	N	
SG12	10.0	0.0	0	21.1	VOCs	SG12SG001	N	
SG13	4.0	0.0	0	0.0	NA	NA	N	
SG14	5.0	0.0	0	0.0	NA	NA	N	
SG15	4.5	0.4	8	85.5	VOCs	SG15SG001	N	
SG16	4.0	0.0	0	2.4	NA	NA	N	
SG17	NA	NA	NA	0.0	NA	NA	N	
SG18	NA	NA	NA	0.0	NA	NA	N	
SG19	5.0	0.0	0	3.2	NA	NA	N	
SG19	10.0	0.0	0	0.1	NA	NA	N	
SG20	3.0	0.0	0	0.0	NA	NA	N	
SG21	7.0	0.5	10	0.6	NA	NA	Y	SG21A
SG21A	6.5	0.2	4	8.1	VOCs	SG21SG001	N	
SG22	4.0	0.0	0	0.0	NA	NA	Y	SG22A
SG22A	7.5	0.0	0	3.1	NA	NA	N	
SG23	4.0	0.1	2	4.4	NA	NA	N	
SG24	3.5	0.2	4	2.3	Field Confirmation	SG24SG001	N	Access denied
SG25	5.0	71.6	1,432	2.6	Methane	SG25SG001	Y	SG25A
SG25	11.0	72.5	1,450	0.1	Methane	SG25SG003	Y	SG25A
SG25A	6.0	73.3	1,466	0.2	Methane	SG25SG004	Y	SG25B
SG25A	12.0	71.3	1,426	0.0	Methane	SG25SG005	Y	SG25B
SG25B	3.5	54.8	1,096	0.0	Methane	SG25SG007	Y	SG25D
SG25B	11.5	0.2	4	0.0	NA	NA	Y	SG25D

TABLE 5: SOIL-GAS SURVEY FIELD SCREENING DATA (Continued)

Parcel E Nonstandard Data Gaps Investigation, Landfill Gas Characterization, Hunters Point Shipyard, San Francisco, California

Location Identification Number	Sample Depth (feet bgs)[a]	Methane (percent volume in air)	Percent of Lower Explosive Limit	VOCs[b] (ppm)	Trigger for Sample Collection	Sample Identification Number	Step-Out (Y/N)	Step-Out Location
SG25C	3.3	0.0	0	6.5	VOCs	SG25SG008	N	
SG25D	3.5	0.1	2	0.4	Field Confirmation	SG25SG009	Y	SG25C
SG25D	12.0	0.2	4	1.5	Field Confirmation	SG25SG010	Y	SG25C
SG26	NA	NA	NA	NA	NA	NA	NA	
SG26A	8.0	32.9	658	1.9	Methane	SG26SG001	Y	SG27A
SG27	NA	NA	NA	NA	NA	NA	NA	
SG27A	6.0	0.1	2	6.5	VOCs	SG27SG001	N	
SG27A	12.0	0.2	4	4.6	NA	NA	N	
SG27B	6.0	46.6	932	0.0	Methane	SG27SG002	Y	SG27A

Notes: Calibration gases used for the instruments include isobutylene for the organic vapor monitorM, 50 percent of the lower explosive limit methane for the GT201, and carbon dioxide, methane, and oxygen for the GEM 2000.

a Sample depth represents the location of the bottom of 3-inch-long sampling screen

b VOCs without background readings

bgs Below ground surface
NA Not applicable
ppm Parts per million
VOC Volatile organic compound

TABLE 6: SUMMARY OF THE SOIL-GAS SURVEY NONMETHANE VOC ANALYTICAL RESULTS
Parcel E Nonstandard Data Gaps Investigation, Landfill Gas Characterization
Hunters Point Shipyard, San Francisco, California

Total Concentration of Detected Nonmethane Volatile Organic Compounds (parts per billion by volume)	Number of Samples	Comments
Greater than 10,000	2	Locations borings SG01D and SG12
Between 1,000 and 10,000	29	Generally located near the landfill
Between 100 and 1,000	17	Generally located in step-out locations
Between 10 and 100	9	Generally located in step-out locations
Less than 10	3	Located in step-out locations

TABLE 7: SOIL-GAS SURVEY LABORATORY RESULTS

Parcel E Nonstandard Data Gaps Investigation, Landfill Gas Characterization, Hunters Point Shipyard, San Francisco, California

Sample ID:	SG01SG001	SG01SG002	SG01SG003	SG01SG004	SG01SG005*	SG01SG006	SG01SG007	SG01SG008	SG02SG001	SG02SG002	SG02SG003	SG02SG004	SG02SG005	SG02SG006
Point Name:	SG01	SG01	SG01C	SG01C	SG01C	SG01D	SG01D	SG01E	SG02A	SG02A	SG02B	SG02C	SG02C	SG02E
Sample Type:	Soil Gas	Soil Gas	Soil Gas	Soil Gas	Soil Gas	Soil Gas	Soil Gas	Soil Gas	Soil Gas	Soil Gas	Soil Gas	Soil Gas	Soil Gas	Soil Gas
Sample Depth (feet bgs):	6	12	7	13	13	6	12	13.5	7	11.5	7	5	13.5	7
EPA Method 25C (ppmv)														
Methane	633,232 J8	556,446 J8	464,158 J8	223,558 J8	383,582 J8	357,968 J8	315,068 J8	26	504,286 J8	554,795 J8	230	407	15,750 J8	523,183 J8
Nonmethane VOC	47.9	46	41	27	40	28	26	0.14 U	55.8	56	0.16 U	0.33 U	0.17 U	66
EPA Method 3C (%)														
Carbon Dioxide	26.67 J8	25.7 J8	21 J8	8.8	16	17	16	0.09 J	23	23 J8	0.16 U	0.33 U	2.98	21.11
Carbon Monoxide	0.15 U	0.14 U	0.13 U	0.15 U	0.15 U	0.14 U	0.14 U	0.14 U	0.16 U	0.14 U	0.16 U	0.33 U	0.05 J	0.14 U
Methane	62.6 J8	55.6 J8	46	21	37	35	31	0.14 U	50	54 J8	0.16 U	0.33 U	1.58	52.32 J8
Nitrogen	8.7	18.1	31	59	43	45	49	79.56	25	21	80	77	81.86	24.32
Oxygen	1	0.8	2.7	12	5.2	2.4	4.6	18.75 J8	1.9	2.2	20 J8	22	12.16	2.21
EPA TO-14A (ppbv)														
1,1,1-Trichloroethane	7.5 U	14 U	0.9 J3	1.4 U	1.5 U	13.4 U	13.5 U	1.39 U	6.8 U	6.8 U	1.6 U	3.1 U	1.67 U	6.92 U
1,1,2,2-Tetrachloroethane	7.5 U	14 U	1.3 U	1.4 U	1.5 U	13.4 U	13.5 U	1.39 U	6.8 U	6.8 U	1.6 U	3.1 U	1.67 U	6.92 U
1,1,2-Trichloro-1,2,2-Trifluoro	8 U	0.85 J	1.7 J3	1.4 U	1.5 U	1.2 J3	13.5 U	1.39 U	0.9 J	0.8 J	1.6 U	3.1 U	1.67 U	6.92 U
1,1,2-Trichloroethane	7.5 U	14 U	1.3 U	1.4 U	1.5 U	13.4 U	13.5 U	1.39 U	0.9 J	6.8 U	1.6 U	3.1 U	1.67 U	6.92 U
1,1-Dichloroethane	15	10 J	1.3 U	1.4 U	1.5 U	1.1 J3	13.5 U	1.39 U	9.1	9.4	1.6 U	3.1 U	1.67 U	2.08 J3
1,1-Dichloroethylene	7.5 U	14 U	1.3 U	1.4 U	1.5 U	0.8 J3	13.5 U	1.39 U	0.9 J	0.7 J	1.6 U	3.1 U	1.67 U	6.92 U
1,2,4-Trichlorobenzene	7.5 U	14 U	1.3 U	1.4 U	1.5 U	19.1 J3	2.9 J	1.39 U	3.1 J	3.1 J	1.5 J	3.1 U	1.67 U	6.92 U
1,2,4-Trimethylbenzene	896	14 U	90.5 J3	83.1	118.8 J3	5,537.6 J3	101.4	1.39 U	31.5	2.4 J	4.3	3.1 U	1.67 U	136.18 J3
1,2-Dibromoethane	7.5 U	14 U	1.3 U	1.4 U	1.5 U	0.8 J3	13.5 U	1.39 U	6.8 U	6.8 U	1.6 U	3.1 U	1.67 U	6.92 U
1,2-Dichloro-1,1,2,2-Tetrafluoroethane	63	32	34.7 J3	15.3	34.3 J3	88.2 J3	33.8	1.39 U	33	38.6	1.6 U	3.1 U	6.05	67.96 J3
1,2-Dichlorobenzene	6.8 J	14 U	8.3 J3	6.1	13.1 J3	2.6 J3	1.5 J	1.39 U	5.4 J	4 J	1.6 U	3.1 U	1.67 U	24.43 J3
1,2-Dichloroethane	5.7 J	3.2 J	2.4 J3	0.9 J	1.5 U	1.2 J3	13.5 U	1.39 U	3.5 J	2.9 J	1.6 U	3.1 U	1.67 U	3.34 J3
1,2-Dichloropropane	1 J	1.3 J	1.3 U	1.4 U	1.5 U	13.4 U	13.5 U	1.39 U	1.2 J	1.2 J	1.6 U	3.1 U	1.67 U	6.92 U
1,3,5-Trimethylbenzene	217	14 U	106.6 J3	75.4	148.5 J3	3,564.8 J3	51.1	1.39 U	6.6 J	3.1 J	2	3.1 U	1.67 U	189 J3
1,3-Butadiene	7.5 U	14 U	1.3 U	1.4 U	1.5 U	2.4 J3	1.4 J	7.47	6.8 U	6.8 U	1.3 J	3.1 J	1.67 U	6.92 U
1,3-Dichlorobenzene	6.8 J	3.9 J	3.2 J3	0.8 J	1.5 J3	13.4 U	0.8 J	1.39 U	11.5	7.8	1.6 U	3.1 U	1.67 U	1.85 J3
1,4-Dichlorobenzene	144	83	19.5 J3	9.3	24.3 J3	1.6 J3	5.7 J	1.39 U	78.8	57.8	1.6 U	3.1 U	1.67 U	21.66 J3
1,4-Dioxane	8 U	14 U	1.3 U	1.4 U	1.5 U	13.4 U	1.2 J	1.39 U	6.8 U	6.8 U	1.6 U	3.1 U	1.67 U	6.92 U
2-Butanone	7.5 U	14 U	22 J3	21.7	58.1 J3	35.1 U4J3	14 U4	16.77	45	6.8 U	6.5 U4	15.4 U4	4.5 U4	6.92 U
2-Hexanone	7.5 U	14 U	1.3 U	1.4 U	1.5 U	13.4 U	13.5 U	3.12	6.8 U	6.8 U	1.6 U	3.1 U	1.67 U	6.92 U
4-Ethyltoluene	189	14 U	29.2 J3	18.8	36.2 J3	2,088.3 J3	25.3	1.39 U	6.9	1.2 J	1.1 J	3.1 U	1.67 U	34.66 J3
4-Methyl-2-Pentanone	7.5 U	14 U	1.3 U	1.4 U	1.5 U	13.4 U	13.5 U	1.3 J	116.9	6.8 U	1.6 U	3.1 U	1.67 U	29.43 J3
Acetone	7.5 U	18 U4	356.6 J3	316.2	232.9 J3	1,820.8 J3	38.6 U4	63.65	43.9	6.8 U	18.7 U2	63.6 U2	25.98	876.72 J3
Benzene	234	134	10.6 J3	5.1	12.1 J3	9.8 J3	14 U2	2.84	43.9	32.4	1.6 U2	4.3 U2	0.95 J	29.36 J3
Benzyl Chloride	752 U	14 U	1.3 U	1.4 U	1.5 U	13.4 U	13.5 U	1.39 U	6.8 U	6.8 U	1.6 U	3.1 U	1.67 U	6.92 U
Bromodichloromethane	8 U	14 U	1.3 U	1.4 U	1.5 U	13.4 U	13.5 U	1.39 U	6.8 U	6.8 U	1.6 U	3.1 U	1.67 U	6.92 U
Bromoform	7.5 U	14 U	2.2 J3	1.4 U	1.5 U	13.4 U	13.5 U	1.39 U	6.8 U	6.8 U	1.6 U	3.1 U	1.67 U	6.92 U
Bromomethane	7.52 U	14 U	4.6 J3	1.4 U	1.5 U	13.2 J3	0.7 J	1.39 U	0.8 J	6.8 U	1.6 U	3.1 U	1.67 U	1.4 J3
Carbon Disulfide	2.7 J	6.3 J	150.4 J3	24.8	14.3 J3	10.5 J3	3.1 J	1.16 J	11.6	1.8 J	1.6 U	11.6	0.95 J	5.36 J3
Carbon Tetrachloride	7.5 U	14 U	1.3 U	100.3	1.5 U	13.4 U	13.5 U	1.39 U	6.8 U	6.8 U	1.6 U	3.1 U	1.67 U	6.92 U
Chlorobenzene	384	339	1.3 U	1.4 U	1.5 U	13.4 U	13.5 U	1.39 U	196.7	203.5	1.6 U	3.1 U	1.67 U	6.92 U
Chloroethane	100	62	18.5 J3	5.7	14.4 J3	27.6 J3	7.1 J	1.39 U	40.7	40.6	1.6 U	3.1 U	1.67 U	22.28 J3
Chloroform	7.5 U	0.71 J	1.3 U	1.4 U	1.5 U	1.8 J3	0.8 J	1.06 J	6.8 U	6.8 U	1.6 U	3.1 U	1.67 U	6.92 U
Chloromethane	4.8 J	14 U2	20.8 J3	7.6	14.6 J3	119.9 J3	5.2 J	1 J	6.8 U2	6.8 U2	1.6 U2	3.1 U	1.47 J	12.83 J3

TABLE 7: SOIL-GAS SURVEY LABORATORY RESULTS (Continued)

Parcel E Nonstandard Data Gaps Investigation, Landfill Gas Characterization, Hunters Point Shipyard, San Francisco, California

Sample ID:	SG01SG001	SG01SG002	SG01SG003	SG01SG004	SG01SG005*	SG01SG006	SG01SG007	SG01SG008	SG02SG001	SG02SG002	SG02SG003	SG02SG004	SG02SG005	SG02SG006
Point Name:	SG01	SG01	SG01C	SG01C	SG01C	SG01D	SG01D	SG01E	SG02A	SG02A	SG02B	SG02C	SG02C	SG02E
Sample Type:	Soil Gas	Soil Gas	Soil Gas	Soil Gas	Soil Gas	Soil Gas	Soil Gas	Soil Gas	Soil Gas	Soil Gas	Soil Gas	Soil Gas	Soil Gas	Soil Gas
Sample Depth (feet bgs):	6	12	7	13	13	6	12	13.5	7	11.5	7	5	13.5	7
EPA TO-14A (ppbv) (Continued)														
cis-1,2-Dichloroethene	6 J	3 J	3 J3	0.9 J	2.5 J3	1.3 J3	1 J	1.39 U	3.1 J	3.5 J	1.6 U	3.1 U	1.67 U	4.57 J3
cis-1,3-Dichloropropene	7.52 U	14 U	1.3 U	1.4 U	1.5 U	13.4 U	13.5 U	1.39 U	6.8 U	6.8 U	1.6 U	3.1 U	1.67 U	6.92 U
Cyclohexane	530	491	223 J3	1.4 U	185.2 J3	122.2 J3	42.6	1.77	496.2	520	1.6 U	1.8 J	1.85	252.62 J3
Dibromochloromethane	7.5 U	14 U	1.3 U	1.4 U	1.5 U	13.4 U	13.5 U	1.39 U	6.8 U	6.8 U	1.6 U	3.1 U	1.67 U	6.92 U
Dichlorodifluoromethane	188	68	14.1 J3	19.9	44.2 J3	66.6 J3	22.3	0.85 J	69.6	69.6	1.6 U2	3.1 U	1.67 U	53.23 J3
Ethanol	7.5 U2	14 U2	259.6 J3	1.4 U	1.5 U	68.9 J3	13.5 U	1.78	16.6	28.7	3.2 U2	3.5 U2	4.38	7.72 J3
Ethylbenzene	110	12 J	30.7 J3	10.9	22.6 J3	6,418.5 J38	58.3	0.77 J	4.9 J	5.1 J	1.6	3.1 U	1.67 U	93 J3
Heptane	530	167	61.3 J3	40.5	76.8 J3	445.2 J3	4.8 J	2.75	265.9	216.4	1.6 U	2.4 J	1.67 U	244.58 J3
Hexachlorobutadiene	7.5 U	14 U	1.3 U	1.4 U	1.5 U	2.5 J3	3.3 J	1.39 U	6.8 U2	6.8 U2	1.3 J	3.1 U	1.67 U	6.92 U
Hexane	754	627	288.4 J3	217.5	203.3 J3	75.9 J3	20.1	6.09	584.6	628.5	1.6 U2	16.3	2.63	428 J3
Isopropyl Alcohol	1.2 J	0.79 J	1.3 U	1.4 U	1.5 U	13.4 U	13.5 U	1.39 U	6.8 U	2.7 J	1.7	3.1 J	3.42	6.92 U
m,p-Xylenes	237	53	269.1 J3	117.6	266.5 J3	12,900.4 J38	276.2	1.24 J	6.1 J	4.8 J	7.7 U2	3.1 U2	1.7 U2	475.96 J3
Methylene Chloride	24 U4	22 U4	1.3 U	159.1	7.3 U4J3	32.5 U4J3	14 U4	2.12 U4	10.8 U4	9 U4	2.7 U4	16.2	4.33 U4	15.46 U4J3
Methyl-Tert Butyl Ether	7.5 U	14 U	1.3 U	1.4 U	1.5 U	13.4 U	13.5 U	1.39 U	6.8 U	6.8 U	1.6 U	3.1 U	1.67 U	6.92 U
o-Xylene	72	12 J	208.3 J3	85.2	196 J3	8,402.0 J38	152.1	1.39 U	4.6 J	1.9 J	3.8 U2	3.1 U	1.67 U	357.87 J3
Propylene	2,080	970	203.8 J3	346.9	304.1 J3	1,232.0 J3	341.7	144.93	677.4	714.4	12.8	48.1	9.4	1,300 J3
Styrene	1.01 J	14 U	3.3 J3	2.4	6.4 J3	1.1 J3	13.5 U	1.39 U	6.8 U	6.8 U	1.6 U	3.1 U	1.67 U	3.4 J3
t-1,2-Dichloroethylene	20	11 J	2.5 J3	1.4 U	1.5 U	13.4 U	13.5 U	1.39 U	2.8 J	3.1 J	1.6 U	3.1 U	1.67 U	6.92 U
t-1,3-Dichloropropene	7.52 U	14 U	1.3 U	1.4 U	1.5 U	0.7 J3	13.5 U	1.39 U	6.8 U	6.8 U	1.6 U	3.1 U	1.67 U	6.92 U
Tetrachloroethylene	1.2 J	2 J	2.3 J3	0.8 J	1.3 J3	3.2 J3	13.5 U	1.39 U	0.7 J	0.8 J	1.6 U	3.1 U	1.67 U	5.45 J3
Tetrahydrofuran	4.2 J	2.2 J	1.2 J3	1.4 U	1.5 U	1.4 J3	13.5 U	1.39 U	0.8 J	6.8 U	1.6 U	3.1 U	1.67 U	6.92 U
Toluene	25	14 U2	17.2 J3	54.7	21.2 J3	3,305.8 J3	10.9 J	2.89	6.8 U2	6.8 U2	1.9 U2	5.4 U2	2.37	64.17 J3
Trichloroethene	8 U	2 J	3 J3	1.7	2.7 J3	2.1 J3	1.3 J	1.39 U	1.8 J	1.7 J	1.6 U	3.1 U	1.67 U	5.56 J3
Trichlorofluoromethane	7.5 U	14 U	0.8 J3	1.1 J	1.5 U	13.4 U	13.5 U	1.39 U	6.8 U	6.8 U	1.6 U	3.1 U	1.67 U	6.92 U
Vinyl Acetate	7.52 U	14 U	1.3 U	1.4 U	1.5 U	13.4 U	13.5 U	1.39 U	6.8 U	6.8 U	1.6 U	3.1 U	1.67 U	6.92 U
Vinyl Chloride	111	38	2.3 J3	1.3 J	3.3 J3	1.9 J3	13.5 U	1.39 U	16.7	16.2	1.6 U	3.1 U	1.67 U	6.12 J3
Total VOCs	6,940.41	3,135.25	2,476.60	1,751.60	2,059.20	46,365.00	1,176.60	261.44	2,844.60	2,628.70	27.60	102.60	59.45	4,760.79

TABLE 7: SOIL-GAS SURVEY LABORATORY RESULTS (Continued)

Parcel E Nonstandard Data Gaps Investigation, Landfill Gas Characterization, Hunters Point Shipyard, San Francisco, California

Sample ID:	SG02SG007	SG02SG008*	SG02SG009	SG02SG011	SG02SG012	SG03SG001	SG03SG002	SG03SG003	SG03SG004	SG03SG005	SG03SG006	SG03SG007	SG03SG008
Point Name:	SG02E	SG02	SG02	SG02G	SG02G	SG03A	SG03A	SG03C	SG03C	SG03	SG03	SG03D	SG03D
Sample Type:	Soil Gas	Soil Gas	Soil Gas	Soil Gas	Soil Gas	Soil Gas	Soil Gas	Soil Gas	Soil Gas	Soil Gas	Soil Gas	Soil Gas	Soil Gas
Sample Depth (feet bgs):	14	6.5	6.5	4.5	14.5	7	14	6.5	13.5	6.5	12.5	7	13.5
EPA Method 25C (ppmv)													
Methane	548,763 J8	576,170 J8	506,079 J8	0 U	0 U	609,161 J8	602,069 J8	283,505 J8	33,632 J8	435,254 J8	420,996 J8	0 U	0 U
Nonmethane VOC	56	81	84	0.14 U	0.14 U	96	97	30	0.18 U	70	66	0.15 U	0.14 U
EPA Method 3C (%)													
Carbon Dioxide	17.39	19	19.8 J8	2.44	1.33	23.22 J8	22.2 J8	10.24	1.88	17.1	16.6	0.15 U2	0.15 U
Carbon Monoxide	0.16 U	0.14 U	0.14 U	0.14 U	0.14 U	0.14 U	0.14 U	0.14 U	0.18 U	0.14 U	0.14 U	0.15 U	0.15 U
Methane	44.61	58 J8	50.7 J8	0.14 U	0.14 U	60.92 J8	60.2 J8	28.35	3.36	42.4	40.3	0.15 U	0.15 U
Nitrogen	33.01	19 J7	12 J7	79.87	83.96	15.3	15 J7	55.56	86.22	32 J7	35 J7	82.17	80.54
Oxygen	4.85	4.4	17 J8	15.83 J8	12.11	2.84	2.8	5.02	12.69	8.5	7.8	19.5 J8	19.22 J8
EPA TO-14A (ppbv)													
1,1,1-Trichloroethane	7.02 U	3.5 U	3.5 U	1.39 U	1.43 U	3.5 U	3.4 U	1.37 U	4.48 U	3.4 U	3.5 U	1.47 U	1.4 U
1,1,2,2-Tetrachloroethane	7.02 U	3.5 U	3.5 U	1.39 U	1.43 U	3.5 U	3.4 U	1.37 U	4.48 U	3.4 U	3.5 U	1.47 U	1.4 U
1,1,2-Trichloro-1,2,2-Trifluoro	1.78 J3	3.5 U	3.5 U	1.39 U	1.43 U	3.5 U	3.4 U	1.37 U	4.48 U	3.4 U	3.5 U	1.47 U	1.4 U
1,1,2-Trichloroethane	7.02 U	3.5 U	3.5 U	1.39 U	1.43 U	3.5 U	3.4 U	1.37 U	4.48 U	3.4 U	3.5 U	1.47 U	1.4 U
1,1-Dichloroethane	7.02 U	3.5 U	4.2 J3	1.39 U	1.43 U	3.5 U	3.4 U	1.37 U	4.48 U	2.4 J3	3.7 J3	1.47 U	1.4 U
1,1-Dichloroethylene	7.02 U	3.5 U	3.5 U	1.39 U	1.43 U	3.5 U	0.8 J3	1.37 U	4.48 U	3.4 U	3.5 U	1.47 U	1.4 U
1,2,4-Trichlorobenzene	7.02 U	3.5 U	3.5 U	1.39 U	1.43 U	3.5 U	352.7 J3	1.37 U	4.48 U	3.4 U	22.3 J3	1.47 U	1.4 U
1,2,4-Trimethylbenzene	350.43 J3	15.5 J3	19.2 J3	2.15 U2	2.16 U2	87.52 J3	767.1 J3	1.37 U	2.53 J	3.4 U	38 J3	1.9 U2	1.9
1,2-Dibromoethane	7.02 U	3.5 U	3.5 U	1.39 U	1.43 U	3.5 U	1.9 J3	1.37 U	4.48 U	3.4 U	3.5 U	1.47 U	1.4 U
1,2-Dichloro-1,1,2,2-Tetrafluoroethane	44.59 J3	86.3 J3	98.5 J3	1.39 U	1.43 U	71.78 J3	92.2 J3	35.9	18.06	72.6 J3	71.3 J3	1.47 U	1.4 U
1,2-Dichlorobenzene	7.02 U	3.5 U	3.5 U	1.39 U	1.4 U2	26.11 J3	83.7 J3	1.37 U	4.48 U	1.9 J3	8.9 J3	1.5 U2	1 J
1,2-Dichloroethane	2.04 J3	3.5 U	2.5 J3	1.39 U	1.43 U	3.5 U	3.4 U	1.37 U	4.48 U	2 J3	3.5 U	1.47 U	1.4 U
1,2-Dichloropropane	7.02 U	3.5 U	3.5 U	1.39 U	1.43 U	3.5 U	3.4 U	1.37 U	4.48 U	3.4 U	3.5 U	1.47 U	1.4 U
1,3,5-Trimethylbenzene	453.42 J3	6 J3	6.6 J3	1.39 U	1.43 U	143.05 J3	700.7 J3	1.37 U	4.48 U	4.5 J3	26.4 J3	1.47 U	1.4 U
1,3-Butadiene	7.02 U	3.5 U	3.5 U	1.98	1.87	3.5 U	3.4 U	1.37 U	4.48 U	3.4 U	3.5 U	1.47 U	1.4 U
1,3-Dichlorobenzene	7.02 U	3.5 U	3.5 U	1.39 U	1.43 U	3.5 U	33.1 J3	1.37 U	4.48 U	1 J3	6.6 J3	1.5 U2	0.8 J
1,4-Dichlorobenzene	5.56 J3	3.8 J3	4.7 J3	1.39 U	1.4 U2	9.58 J3	63.9 J3	1.37 U	4.48 U	7.6 J3	70.5 J3	1.5 U2	0.9 J
1,4-Dioxane	7.02 U	3.5 U	3.5 U	1.39 U	1.43 U	3.5 U	3.4 U	1.37 U	4.48 U	3.4 U	3.5 U	1.47 U	1.4 U
2-Butanone	15.71 U4J3	3.5 U	3.5 U	1.39 U	1.43 U	3.5 U	3.4 U	1.37 U	4.5 U4	3.4 U	10.8 U4J3	1.47 U	1.4 U
2-Hexanone	7.02 U	3.5 U	3.5 U	1.39 UJ7	1.43 UJ7	3.5 U	3.4 U	1.37 UJ7	4.48 U	3.4 U	3.5 U	1.47 UJ7	1.4 UJ7
4-Ethyltoluene	101.71 J3	3.5 U	3.5 U	1.39 U	1.43 U	44.55 J3	92.4 J3	0.76 J	4.48 U	3.4 U	3.5 U	1.47 U	1.4 U
4-Methyl-2-Pentanone	7.02 U	3.5 U	3.5 U	1.39 U	1.43 U	7.51 J3	3.4 U	1.37 U	4.48 U	3.4 U	3.5 U	1.47 U	1.4 U
Acetone	195.13 J3	3.5 U	3.5 U	16.88 U2	4.61 U4	278.98 J3	3.4 U	4.96 U4	14.96 U4	3.4 U	3.5 U	12.87 U2	15.4
Benzene	26.43 J3	26.3 J3	29.4 J3	1.39 U	1.43 U	64.42 J3	41 J3	0.91 J	4.48 U	71.9 J3	60.7 J3	1.47 U	1.4 U
Benzyl Chloride	7.02 U	3.5 U	3.5 U	1.39 U	1.43 U	3.5 U	3.4 U	1.37 U	4.48 U	3.4 U	3.5 U	1.47 U	1.4 U
Bromodichloromethane	7.02 U	3.5 U	3.5 U	1.39 U	1.43 U	3.5 U	3.4 U	1.37 U	4.48 U	3.4 U	3.5 U	1.47 U	1.4 U
Bromoform	7.02 U	3.5 U	3.5 U	1.39 U	1.43 U	3.5 U	3 J3	1.37 U	4.48 U	3.4 U	3.5 U	1.47 U	1.4 U
Bromomethane	7.02 U	3.5 U	3.5 U	1.39 U	1.43 U	3.5 U	3.4 U	1.37 U	4.48 U	3.4 U	3.5 U	1.47 U	1.4 U
Carbon Disulfide	4.81 J3	3.5 U	3.5 U	1.39 U	1.43 U	3.85 J3	1 J3	1.37 U	4 J	3.4 U	23.4 J3	1.47 U	1.4 U
Carbon Tetrachloride	7.02 U	3.5 U	3.5 U	1.39 U	1.43 U	3.5 U	3.4 U	1.37 U	4.48 U	3.4 U	3.5 U	1.47 U	1.4 U
Chlorobenzene	7.02 U	3.5 U	66.1 J3	1.39 U	1.43 U	3.5 U	3.4 U	1.37 U	4.48 U	151.9 J3	265.4 J3	1.47 U	1.4 U
Chloroethane	12.42 J3	67 J3	74.8 J3	1.39 U	1.43 U	37.94 J3	42.2 J3	1.37 U	4.48 U	25 J3	33.9 J3	1.47 U	1.4 U
Chloroform	7.02 U	3.5 U	3.5 U	4.38	1.43 U	3.5 U	3.4 U	1.37 U	4.48 U	3.4 U	3.5 U	1.47 U	1.4 U
Chloromethane	1.96 J3	3.5 U	3.5 U	1.39 U	1.43 U	3.5 U	3.4 U	1.37 U	4.48 U	3.4 U	3.5 U	1.5 U2	1.2 J

TABLE 7: SOIL-GAS SURVEY LABORATORY RESULTS (Continued)

Parcel E Nonstandard Data Gaps Investigation, Landfill Gas Characterization, Hunters Point Shipyard, San Francisco, California

Sample ID:	SG02SG007	SG02SG008*	SG02SG009	SG02SG011	SG02SG012	SG03SG001	SG03SG002	SG03SG003	SG03SG004	SG03SG005	SG03SG006	SG03SG007	SG03SG008
Point Name:	SG02E	SG02	SG02	SG02G	SG02G	SG03A	SG03A	SG03C	SG03C	SG03	SG03	SG03D	SG03D
Sample Type:	Soil Gas	Soil Gas	Soil Gas	Soil Gas	Soil Gas	Soil Gas	Soil Gas	Soil Gas	Soil Gas	Soil Gas	Soil Gas	Soil Gas	Soil Gas
Sample Depth (feet bgs):	14	6.5	6.5	4.5	14.5	7	14	6.5	13.5	6.5	12.5	7	13.5
EPA TO-14A (ppbv) (Continued)													
cis-1,2-Dichloroethene	3.35 J3	9 J3	9.5 J3	1.39 U	1.43 U	6.97 J3	3.2 J3	1.37 U	4.48 U	2.8 J3	4.3 J3	1.47 U	1.4 U
cis-1,3-Dichloropropene	7.02 U	3.5 U	3.5 U	1.39 U	1.43 U	3.5 U	3.4 U	1.37 U	4.48 U	3.4 U	3.5 U	1.47 U	1.4 U
Cyclohexane	189.7 J3	459.2 J3	524.1 J3	1.39 U	1.43 U	159.44 J3	231.1 J3	22.97	5.72	444 J3	475 J3	1.47 U	1.4 U
Dibromochloromethane	7.02 U	3.5 U	3.5 U	1.39 U	1.43 U	3.5 U	0.9 J3	1.37 U	4.48 U	3.4 U	3.5 U	1.47 U	1.4 U
Dichlorodifluoromethane	36.66 J3	50.8 J3	57.7 J3	1.39 U	1.43 U	55.06 J3	52.2 J3	8.63	3.19 J	233.5 J3	250.1 J3	1.47 U	1.4 U
Ethanol	12.72 J3	3.5 U	3.5 U	9.74 U2	1.79 U2	3.5 U	3.4 U	1.37 U	2.44 J	3.4 U	3.5 U	112.84 U2	160
Ethylbenzene	171.64 J3	6.3 J3	6.9 J3	1.39 U	1.43 U	25.65 J3	29.5 J3	1.37 U	4.48 U	2.6 J3	3.9 J3	1.47 U	1.4 U
Heptane	231.66 J3	242.2 J3	277.1 J3	1.39 U	1.43 U	151.34 J3	235.7 J3	1.37 U	2.17 J	279 J3	394.5 J3	1.47 U	1.4 U
Hexachlorobutadiene	7.02 U	9.9 U2J3	3.5 U	1.39 U	1.43 U	3.5 U	42.6 J3	1.37 U	4.48 U	3.4 U	12 U2J3	1.47 U	1.4 U
Hexane	348.81 J3	439.4 J3	549.5 J3	1.39 U	1.43 U	352.98 J3	372.9 J3	8.49 U2	31.32	386.3 J3	455.8 J3	1.47 U	1.4 U
Isopropyl Alcohol	7.02 U	3.5 U	3.5 U	1.39 U	1.43 U	3.5 U	3.4 U	1.37 U	4.48 U	3.4 U	3.5 U	1.47 U	19.7
m,p-Xylenes	639.38 J3	7.1 J3	9.4 J3	1.4 U2	1.4 U2	142.42 J3	175.3 J3	1.4 U2	6.76	6.6 J3	13.1 J3	1.5 U2	2.6
Methylene Chloride	51.65 J3	10.3 U4J3	11.6 U4J3	2.95 U4	3.13 U4	18.59 J3	10.1 U4J3	2.97 U4	33.72	9.6 U4J3	12.2 U4J3	2.82 U4	2.7 U4
Methyl-Tert Butyl Ether	7.02 U	3.5 U	3.5 U	1.39 U	1.43 U	3.5 U	3.4 U	1.37 U	4.48 U	3.4 U	3.5 U	1.47 U	1.4 U
o-Xylene	552.76 J3	5.3 J3	8.1 J3	1.39 U	1.43 U	135.61 J3	152 J3	1.37 U	3.17 J	3.4 U	3.5 U	1.47 U	1.2 J
Propylene	1,191.93 J3	1,388.7 J3	1256.1 J3	17.3	22.5	415.38 J3	1472.1 J3	1.37 U	44.38	1,416 J3	1,503.8 J3	7.63	4.9
Styrene	5.75 J3	3.5 U	3.5 U	1.39 U	1.43 U	3.5 U	22.5 J3	1.37 U	4.48 U	3.4 U	3.5 U	1.47 U	1.4 U
t-1,2-Dichloroethylene	7.02 U	2.4 J3	2.4 J3	1.39 U	1.43 U	3.5 U	0.9 J3	1.37 U	4.48 U	2 J3	2.6 J3	1.47 U	1.4 U
t-1,3-Dichloropropene	7.02 U	3.5 U	3.5 U	1.39 U	1.43 U	3.5 U	1.5 J3	1.37 U	4.48 U	3.4 U	3.5 U	1.47 U	1.4 U
Tetrachloroethylene	30.89 J3	6.8 J3	7.6 J3	1.39 U	1.43 U	3.5 U	2.3 J3	1.37 U	4.48 U	3.4 U	3.5 U	1.47 U	1.4 U
Tetrahydrofuran	7.02 U	3.5 U	3.5 U	1.39 U	1.43 U	3.5 U	3.4 U	1.37 U	4.48 U	3.4 U	3.5 U	1.47 U	1.4 U
Toluene	92.27 J3	3.5 U2J3	2.3 U2J3	1.4 U2	1.43 U	35.29 J3	23.1 J3	1.62 U2	6.69	3.4 U2J3	3.1 U2J3	1.47 U	0.8 J
Trichloroethene	3.4 J3	3.8 J3	4.6 J3	1.39 U	1.43 U	2.97 J3	2.1 J3	1.37 U	2.12 J	1.4 J3	1.9 J3	1.47 U	1.4 U
Trichlorofluoromethane	7.02 U	3.5 U	3.5 U	1.39 U	1.43 U	3.5 U	3.4 U	1.37 U	4.48 U	3.4 U	3.5 U	1.47 U	1.4 U
Vinyl Acetate	7.02 U	3.5 U	3.5 U	1.39 U	1.43 U	3.5 U	3.4 U	1.37 U	4.48 U	3.4 U	3.5 U	1.47 U	1.4 U
Vinyl Chloride	3.33 J3	12.7 J3	14.4 J3	1.39 U	1.43 U	19.62 J3	20.9 J3	1.37 U	4.48 U	44.7 J3	38.4 J3	1.47 U	1.4 U
Total VOCs	4,766.18	2,838.60	3,033.40	23.66	24.37	2,296.61	5,116.50	69.17	166.27	3,159.70	3,774.50	7.63	210.40

TABLE 7: SOIL-GAS SURVEY LABORATORY RESULTS (Continued)

Parcel E Nonstandard Data Gaps Investigation, Landfill Gas Characterization, Hunters Point Shipyard, San Francisco, California

Sample ID:	SG04SG001	SG04SG002	SG04SG003	SG04SG004	SG04SG005	SG05SG001	SG05SG002	SG05SG003	SG05SG004	SG05SG005	SG06SG001	SG06SG002	SG06SG003	SG06SG004
Point Name:	SG04	SG04	SG04A	SG04A	SG04A	SG05A	SG05B	SG05B	SG05C	SG05C	SG06	SG06A	SG06B	SG06C
Sample Type:	Soil Gas	Soil Gas	Soil Gas	Soil Gas	Soil Gas	Soil Gas	Soil Gas	Soil Gas	Soil Gas	Soil Gas	Soil Gas	Soil Gas	Soil Gas	Soil Gas
Sample Depth (feet bgs):	3	9	6	6	11	4	4	9	4	9	6.5	5	5	4.5
EPA Method 25C (ppmv)														
Methane	0 U	321,667 J8	502,297 J8	125,428 J8	473,219 J8	360,000 J8	512,000 J8	555,000 J8	299,000 J8	101,000 J8	13,829 J8	467,000 J8	64,500 J8	546
Nonmethane VOC	91.84	86.24	173	44	183	120	186	205	142	56	8.48 U2	116	11.2	0.3 J
EPA Method 3C (%)														
Carbon Dioxide	26.4 J8	13.07	18.41	4.4	18.36	8.04	16.25	19.06	13.53	4.35	0.29	10.41	5.12	0.17 U
Carbon Monoxide	0.13 U	0.14 U	0.14 U	0.15 U	0.14 U	0.28 U	0.14 U	0.14 U	0.21 U	0.27 U	0.18 U	0.14 U	0.14 U	0.17 U
Methane	62.2 J8	32.2	50.23 J8	12.06	47.32	31.11	51.3	54.53 J8	29.85	9.73	1.2	46.71	6.45	0.17 U
Nitrogen	10	47.8	25.74 J7	66.93	29.27	47.2	27.94	25.68	48.15	67.72	80.4	40.83	77.28	90
Oxygen	1.3	7	7.03	16.93 J8	3.82	13.24	3.83	0.97	8.44	17.47	20 J8	2.33	8.89	5
EPA TO-14A (ppbv)														
1,1,1-Trichloroethane	1.3 U	3 U	6.76 U	3.36 U	3.42 U	2.5 U	1.4 U	1.4 U	2.1 U	2.7 U	0.7 U	1.4 U	1.4 U	1.4 U
1,1,2,2-Tetrachloroethane	1.3 U	3.5 U	6.76 U	3.36 U	3.42 U	2.5 UJ0	0.8 J0	1.4 UJ0	2.1 UJ0	2.7 UJ0	0.7 U	1.4 U	1.4 U	1.4 U
1,1,2-Trichloro-1,2,2-Trifluoro	1.3 U	3 U	6.76 U	3.36 U	3.42 U	2.5 U	1.4 U	1.4 U	2.1 U	2.7 U	0.7 U	1.4 U	1.4 U	1.4 U
1,1,2-Trichloroethane	1.3 U	3.5 U	6.76 U	3.36 U	3.42 U	2.5 U	1.4 U	1.4 U	2.1 U	2.7 U	0.7 U	1.4 U	1.4 U	1.4 U
1,1-Dichloroethane	1 J	4.8	12.74	1.89 J	12.23	32.1 J3	30.1	25 J3	2.1 U	2.7 U	0.7 U	1.4 U	1.4 U	1.4 U
1,1-Dichloroethylene	0.77 J	3 U	6.76 U	3.36 U	3.42 U	2.5 U	1.4 U	1.4 U	2.1 U	2.7 U	0.7 U	1.4 U	1.4 U	1.4 U
1,2,4-Trichlorobenzene	11	3.5 U	0.77 J	3.36 U	3.42 U	2.1 J03	1.4 UJ0	1.6 J03	2.1 UJ0	2.7 UJ0	0.7 U	1.4 U	1.4 U	1.4 U
1,2,4-Trimethylbenzene	1.3 U	3.5 U	6.8 U2	3.36 U	8.16	4 J03	1.4 UJ0	1.4 UJ0	2.1 UJ0	2.7 UJ0	1 U2	1.2 J	1.4 U	2
1,2-Dibromoethane	1.34 U	3.5 U	6.76 U	3.36 U	3.42 U	2.5 U	1.4 U	1.4 U	2.1 U	2.7 U	0.7 U	1.4 U	1.4 U	1.4 U
1,2-Dichloro-1,1,2,2-Tetrafluoroethane	46	78	90.64	16.92	86.67	72.4 J3	55.8	65.4 J3	93.4	39.1	2.2	124.3	31.2	1.7
1,2-Dichlorobenzene	13	3.5	6.76 U	3.36 U	3.42 U	1.6 J03	1.4 UJ0	1.4 UJ0	2.1 UJ0	2.7 UJ0	0.7 U	1.4 U	1.4 U	1.4 U
1,2-Dichloroethane	1.2 J	1.2 J	0.93 J	3.36 U	3.42 U	2.5 U	1.4 U	1.4 U	2.1 U	2.7 U	0.7 U	1.4 U	1.4 U	1.4 U
1,2-Dichloropropane	1.3 U	0.72 J	6.76 U	3.36 U	3.42 U	2.5 U	1.4 U	1.4 U	2.1 U	2.7 U	0.7 U	1.4 U	1.4 U	1.4 U
1,3,5-Trimethylbenzene	1.3 U	2.5 J	6.76 U	3.36 U	6.14	2.3 J03	1.4 UJ0	1.4 UJ0	2.1 UJ0	2.7 UJ0	0.7 U	1.4 U	1.4 U	1.4 U
1,3-Butadiene	1.3 U	1.3 J	6.76 U	3.36 U	3.42 U	2.1 J3	1.1 J	5 J3	1.3 J	1.9 J	1.5	1.4 U	1.4 U	1.4 U
1,3-Dichlorobenzene	13	1.7 J	6.76 U	3.36 U	3.42 U	1.3 J03	1.4 UJ0	1.4 UJ0	2.1 UJ0	2.7 UJ0	0.7 U	1.4 U	1.4 U	1.4 U
1,4-Dichlorobenzene	111	17	6.76 U	3.36 U	3.42 U	2.8 J03	1.4 UJ0	1.4 UJ0	2.1 UJ0	2.7 UJ0	0.7 U	0.8 J	1.4 U	1.3 J
1,4-Dioxane	1.3 U	3.5 U	6.76 U	3.36 U	3.42 U	2.5 U	1.4 U	1.4 U	2.1 U	2.7 U	0.7 U	1.4 U	1.4 U	1.4 U
2-Butanone	1.3 U4	3.5 U	6.8 U4	4.12 U4	3.42 U	2.5 U	3.9 U4	1.4 U	2.1 U	2.7 U	4.6 U4	2.1 U4	1.4 U	1.4 U
2-Hexanone	1.3 U	3.5 U	6.76 U	3.36 U	3.42 U	2.5 U	1.4 U	1.4 U	2.1 U	2.7 U	0.7 U	1.4 U	1.4 U	1.4 U
4-Ethyltoluene	1.3 U	3.5 U	6.76 U	3.36 U	2.16 J	1.8 J03	1.4 UJ0	1.4 UJ0	2.1 UJ0	2.7 UJ0	0.7 U	1.4 U	1.4 U	1.4 U
4-Methyl-2-Pentanone	52	3.5 U	6.76 U	3.36 U	3.42 U	2.5 U	1.4 U	1.4 U	2.1 U	2.7 U	1	1.4 U	1.4 U	1.4 U
Acetone	107	162	6.76 U	23.21	278.7	34.7 U2J3	229.9	1.4 U	11.1 U4	22.2 U2	0.7 U	7.7	6.1 U4	6.2 U4
Benzene	134	62	26.07	4.03	16.77	15.2 J3	3.8	0.8 J3	4.1	31.8	4	2.2	1.4 U	1.4 U
Benzyl Chloride	1.3 U	3.5 U	6.76 U	3.36 U	3.42 U	2.5 UJ0	1.4 UJ0	1.4 UJ0	2.1 UJ0	2.7 UJ0	0.7 U	1.4 U	1.4 U	1.4 U
Bromodichloromethane	1.3 U	3 U	6.76 U	3.36 U	3.42 U	2.5 U	1.4 U	1.4 U	2.1 U	2.7 U	0.7 U	1.4 U	1.4 U	1.4 U
Bromoform	1.3 U	3.5 U	6.76 U	3.36 U	3.42 U	2.5 UJ0	1.4 UJ0	1.4 UJ0	2.1 UJ0	2.7 UJ0	0.7 U	1.4 U	1.4 U	1.4 U
Bromomethane	1.3 U	3.5 U	6.76 U	3.36 U	3.42 U	2.5 U	1.4 U	1.4 U	2.1 U	2.7 U	0.7 U	1.4 U	1.4 U	1.4 U
Carbon Disulfide	1.1 J	142	1.65 J	11.24	5.6	5 J3	1.4 U2	2 U2J3	2.1 U2	4.2	0.91	1.4 U	1.4 U	0.8 J
Carbon Tetrachloride	1.3 U	3.5 U	6.76 U	3.36 U	3.42 U	2.5 U	1.4 U	1.4 U	2.1 U	2.7 U	0.7 U	1.4 U	1.4 U	1.4 U
Chlorobenzene	157	60	6.76 U	3.36 U	3.42 U	2.5 UJ0	1.4 UJ0	1.4 UJ0	1.1 J0	2.7 UJ0	0.7 U	1.4 U	1.4 U	1.4 U
Chloroethane	8.1	23	163.46	26.88	181.63	228.8 J3	91.3	71.3 J3	3.6	2.7 U	0.7 U	1.4 U	1.4 U	1.4 U
Chloroform	1.3 U	3 U	6.76 U	3.36 U	3.42 U	2.5 U	1.4 U	1.4 U	2.1 U	2.7 U	0.7 U	1.4 U	1.4 U	1.4 U
Chloromethane	1.3 U	0.76 J	6.54 J	3.36 U	2 J	2.5 U	30.7	1.4 U	2.1 U	2.7 U	1.1	1.4 U	1.4 U	1.4 U

TABLE 7: SOIL-GAS SURVEY LABORATORY RESULTS (Continued)

Parcel E Nonstandard Data Gaps Investigation, Landfill Gas Characterization, Hunters Point Shipyard, San Francisco, California

Sample ID:	SG04SG001	SG04SG002	SG04SG003	SG04SG004	SG04SG005	SG05SG001	SG05SG002	SG05SG003	SG05SG004	SG05SG005	SG06SG001	SG06SG002	SG06SG003	SG06SG004
Point Name:	SG04	SG04	SG04A	SG04A	SG04A	SG05A	SG05B	SG05B	SG05C	SG05C	SG06	SG06A	SG06B	SG06C
Sample Type:	Soil Gas	Soil Gas	Soil Gas	Soil Gas	Soil Gas	Soil Gas	Soil Gas	Soil Gas	Soil Gas	Soil Gas	Soil Gas	Soil Gas	Soil Gas	Soil Gas
Sample Depth (feet bgs):	3	9	6	6	11	4	4	9	4	9	6.5	5	5	4.5
EPA TO-14A (ppbv) (Continued)														
cis-1,2-Dichloroethene	4.9	11	10.5	1.4 J	9.99	19.2 J3	1.4 U	3.5 J3	2.1 U	2.7 U	0.7 U	1.4 U	1.4 U	1.4 U
cis-1,3-Dichloropropene	1.3 U	3.5 U	6.76 U	3.36 U	3.42 U	2.5 U	1.4 U	1.4 U	2.1 U	2.7 U	0.7 U	1.4 U	1.4 U	1.4 U
Cyclohexane	280	284	255.19	40.57	214.12	196.8 J3	101.3	99.2 J3	27	185.7	15	5.4	1.9	3.2
Dibromochloromethane	1.34 U	3.5 U	6.76 U	3.36 U	3.42 U	2.5 U	1.4 U	1.4 U	2.1 U	2.7 U	0.7 U	1.4 U	1.4 U	1.4 U
Dichlorodifluoromethane	27	11	11.27	2.51 J	15.01	51.9 J3	11.7	5.1 U2J3	1.6 U2	2.7 U	2.4	7.1	0.7 J	1.4
Ethanol	1.3 U	3.5 U2	6.76 U	22.19	3.42 U	37.1 U2J3	57.6	1.9 U2J3	2.1 U	645.7	0.7 U	1.4 U	1.1 J	1.1 J
Ethylbenzene	8.2	4.6	3.05 J	3.36 U	2.99 J	3.5 J03	0.7 J0	1.4 UJ0	2.1 UJ0	3.8 J0	3	1.4 U	1.4 U	1.4 U
Heptane	421	267	50.07	7.61	39.93	17.8 J3	7.9	15.9 J3	2.4	36.4	15	1.4 U	0.8 J	1.2 J
Hexachlorobutadiene	1.3 U	3 J	6.76 U	3.36 U	3.42 U	3.2 J03	1.4 UJ0	1.4 UJ0	2.1 UJ0	2.7 UJ0	0.7 U	1.1 J	1.4 U	1.4 U
Hexane	389	267	295.05	96.32	205.56	262.5 J3	39.2	97.3 J3	13.6 U2	116.4	11 U2	2.9	45.1	5
Isopropyl Alcohol	1.3 U	3 U	6.76 U	3.36 U	3.42 U	2.5 U	1.4 U	1.4 U	2.1 U	72.8	4.4	1.4 U	1.4 U	1.4 U
m,p-Xylenes	11	12	9.01 U2	3.05 J	14.95	9.8 J03	2 J0	1.6 J03	1.8 J0	8.2 J0	8	1.4	1.4 U	0.7 J
Methylene Chloride	1.3 U	11 U4	18.57 U4	96.97	11.99 U4	24.1 U2J3	21.6 U2	3.8 U4J3	3.6 U4	18.5 U2	3 U4	2.6 U4	2.2 U4	3.3 U4
Methyl-Tert Butyl Ether	1.3 U	3.5 U	6.76 U	3.36 U	3.42 U	2.5 U	1.4 U	1.4 U	2.1 U	2.7 U	7.8	1.4 U	1.4 U	1.4 U
o-Xylene	7.1	8.6	6.22 J	3.36 U	10.04	4.2 J03	1.4 UJ0	1.4 UJ0	2.1 UJ0	3.3 J0	4	0.7 J	1.4 U	1.4 U
Propylene	1.3 U	447	602.08	44.5	147.27	205.9 J3	1.4 U	1.4 U	2.1 U	2.7 U	30	1.4 U	15.4	16.3
Styrene	1.3 U	0.72 J	6.76 U	3.36 U	3.42 U	2.5 J03	1.4 UJ0	1.4 UJ0	2.1 UJ0	2.7 UJ0	0.7 U	1.4 U	1.4 U	1.4 U
t-1,2-Dichloroethylene	0.79 J	2.8 J	2 J	3.36 U	2.05 J	4.1 J3	1.4 U	0.8 J3	2.1 U	2.7 U	0.7 U	1.4 U	1.4 U	1.4 U
t-1,3-Dichloropropene	1.3 U	3.5 U	6.76 U	3.36 U	3.42 U	2.5 U	1.4 U	1.4 U	2.1 U	2.7 U	0.7 U	1.4 U	1.4 U	1.4 U
Tetrachloroethylene	2.8	4.9	2.95 J	3.36 U	2.1 J	5.1 J3	1.4 U	1.4 U	2.1 U	2.7 U	1.9	0.9 J	1.4 U	1.4 U
Tetrahydrofuran	1.3 U	3.2 J	6.76 U	3.36 U	3.42 U	2.5 U	1.4 U	1.4 U	2.1 U	2.7 U	0.7 U	1.4 U	1.4 U	1.4 U
Toluene	17 U2	11 U2	23.04	43.39	4.14	40.6 J3	2	1.4 U	1.7 J	40.5	17	1.5	1.4 U	1.2 J
Trichloroethene	2.4	7.3	2.49 J	3.36 U	1.99 J	9.5 J3	1.4 U	1.4 U	2.1 U	1.5 J	0.7 U	1.4 U	1.4 U	1.4 U
Trichlorofluoromethane	1.3 U	2.8 J	6.76 U	3.36 U	3.42 U	2.5 U	1.4 U	1.4 U	2.1 U	2.7 U	1	1.4 U	1.4 U	1.4 U
Vinyl Acetate	1.3 U	0.8 J	6.76 U	3.36 U	3.42 U	2.5 U	1.4 U	1.4 U	2.1 U	2.7 U	0.7 U	1.4 U	1.4 U	1.4 U
Vinyl Chloride	6.9	18	13.49	2.11 J	10.9	22.7 J3	1.1 J	1.4 U	2.1 U	2.7 U	0.7 U	1.4 U	1.4 U	1.4 U
Total VOCs	1,817.26	1,916.20	1,580.20	444.79	1,281.10	1,230.80	667.00	387.40	136.40	1,191.30	120.21	157.20	96.20	35.90

TABLE 7: SOIL-GAS SURVEY LABORATORY RESULTS (Continued)

Parcel E Nonstandard Data Gaps Investigation, Landfill Gas Characterization, Hunters Point Shipyard, San Francisco, California

Sample ID:	SG07SG001	SG07SG002	SG07SG003	SG08SG001	SG08SG002	SG08SG003	SG11SG001	SG12SG001	SG15SG001	SG21SG001	SG21SG002*	SG24SG001	SG24SG002*	SG25SG001
Point Name:	SG07	SG07A	SG07A	SG08	SG08A	SG08A	SG11	SG12	SG15	SG21A	SG21A	SG24	SG24	SG25
Sample Type:	Soil Gas	Soil Gas	Soil Gas	Soil Gas	Soil Gas	Soil Gas	Soil Gas	Soil Gas	Soil Gas	Soil Gas	Soil Gas	Soil Gas	Soil Gas	Soil Gas
Sample Depth (feet bgs):	10	5	10	12	4	8	8	10	4.5	6.5	6.5	3.5	3.5	5
EPA Method 25C (ppmv)														
Methane	719,454 J8	36,400 J8	408	649,948 J8	225,547 J8	81,681 J8	212	0 U	4,991 J8	511	4,135 J8	399 U2	24 U2	641,000 J8
Nonmethane VOC	153	0.15 U	0.15 U	190	50.1	4.8	0.16 U	0.15 U	13 U2	1.4 U	0.37 U	0.33 U	0.27 U	48.2
EPA Method 3C (%)														
Carbon Dioxide	19.9	5.8	0.21 U2	3.46	4.6	4.29	4.8	2	0.59	0.08 U2	0.15 U2	0.33 U	0.14 U	22.77 J8
Carbon Monoxide	0.14 U	0.15 U	0.21 U2	0.21 U	0.15 U	0.16 U	0.16 U	0.15 U	0.27 U	0.28 U	0.37 U	0.33 U	0.14 U	0.14 U
Methane	71.9 J8	3.7	0.21 J	64.5	23	6.07	0.16 U	0.15 U	0.42	0.2 J	0.4	0.33 U	0.14 U	64.24 J8
Nitrogen	4.5	87	79	26	64	82.71	90	86	79	78.4 J7	77 J7	77	79.9	10.08
Oxygen	0.5	4.1	20	5	11	6.83	3.1	11	21	21.8	22.1	21	19 J8	1.73
EPA TO-14A (ppbv)														
1,1,1-Trichloroethane	0.7 U	1.5 U	2.1 U	7.1	1.5 U	1.4 U	5.1	4318	1.1 U	1.4 U	3.7 U	3.3 U	2.7 U	6.9 U
1,1,2,2-Tetrachloroethane	0.7 U	1.5 UJ0	2.1 UJ0	5.2 U	1.5 U	1.4 U	0.7 U	1.1 J	1.1 U	1.4 U	3.7 U	3.3 U	2.7 U	6.9 U
1,1,2-Trichloro-1,2,2-Trifluoro	0.7 U	1.5 U	2.1 U	2.1 J	1.5 U	1.4 U	0.7 U	67	10.7	1.4 U	3.7 U	3.3 U	2.7 U	1.3 J
1,1,2-Trichloroethane	0.7 U	1.5 U	2.1 U	5.2 U	1.5 U	1.4 U	0.7 U	1 J	1.1 U	1.4 U	3.7 U	3.3 U	2.7 U	0.9 J
1,1-Dichloroethane	0.7 U	1.5 U	2.1 U	5.2 U	1.5 U	1.4 U	1	203	1.1 U	1.4 U	3.7 U	3.3 U	2.7 U	4.4 J
1,1-Dichloroethylene	0.7 U	1.5 U	2.1 U	1.2 J	1.5 U	1.4 U	1.1	865	1.1 U	1.4 U	3.7 U	3.3 U	2.7 U	6.9 U
1,2,4-Trichlorobenzene	0.7 U	1.5 UJ0	2.1 UJ0	2 J	2.5	1.4 U	0.7 U	2.7 J	1.1 U	6.4	3.7 U	3.3 U	2.7 U	6.9 U
1,2,4-Trimethylbenzene	0.7 U	1.3 J0	4 J0	464	38.1	1.4 U	0.7 U	3.4 U2	1.1 U	3.4	7	52	2.6 J	4.7 J
1,2-Dibromoethane	0.7 U	1.5 U	2.1 U	5.2 U	1.5 U	1.4 U	0.7 U	1 J	1.1 U	1.4 U	3.7 U	3.3 U	2.7 U	6.9 U
1,2-Dichloro-1,1,2,2-Tetrafluoroethane	0.7 U	13.8	2.1 U	136	57.7	22.5	0.7 U	1.8 J	1.1 U	1.4 U	3.7 U	3.3 U	2.7 U	57.5
1,2-Dichlorobenzene	0.7 U	0.9 J0	2.1 UJ0	2.7 J	1.5 U	1.4 U	0.7 U	1.7 J	1.1 U	1.4 U	3.7 U	3.3 U	2.7 U	3.8 J
1,2-Dichloroethane	0.7 U	1.5 U	2.1 U	6	1.5 U	1.4 U	0.7 U	0.93 J	1.1 U	1.4 U	3.7 U	3.3 U	2.7 U	2.8 J
1,2-Dichloropropane	0.7 U	1.5 U	2.1 U	5.2 U	1.5 U	1.4 U	0.7 U	0.78 J	1.1 U	1.4 U	3.7 U	3.3 U	2.7 U	6.9 U
1,3,5-Trimethylbenzene	0.7 U	1.5 UJ0	2.1 J0	228	8	1.4 U	0.7 U	0.99 J	90	0.9 J	2 J	12	2.7 U	4 J
1,3-Butadiene	0.7 U	1.4 J	1.5 J	3 J	1.5 U	1.4 U	1.5	0.82 J	1.1 U	1.4 U	3.7 U	3.3 U	2.7 U	6.9 U
1,3-Dichlorobenzene	0.7 U	1.5 UJ0	2.1 UJ0	5.2 U	1.5 U	1.4 U	0.7 U	1.2 J	1.1 U	1.4 U	3.7 U	3.3 U	2.7 U	3.3 J
1,4-Dichlorobenzene	0.7 U	0.8 J0	2.1 UJ0	5.2 U	1.5 U	1.4 U	0.7 U	1.4 J	1.1 U	2.8	3.7 U	3.3 U2	2.7 U	176.8
1,4-Dioxane	0.7 U	1.5 U	2.1 U	5.2 U	1.5 U	1.4 U	0.7 U	3.4 U	1.1 U	1.4 U	3.7 U	3.3 U	2.7 U	6.9 U
2-Butanone	0.7 U	1.5 U	5.2 U4	5.2 U4	1.5 U	1.4 U	1.7 U4	3.4 U4	7 U4	3 U4	3.7 U	21 U4	3.8 U4	6.9 U4
2-Hexanone	0.7 U	1.5 U	2.1 U	5.2 U	1.5 U	1.4 U	0.7 U	2.7 J	1.1 U	1.4 U	3.7 U	3.3 U	1.9 J	6.9 U
4-Ethyltoluene	0.7 U	1.5 UJ0	1.1 J0	98	4.1	1.4 U	0.7 U	1 J	1.1 U	0.7 J	3.7 U	11	2.7 U	2.5 J
4-Methyl-2-Pentanone	0.7 U	1.5 U	2.1 U	44	1.5 U	1.4 U	0.7 U	2 J	1.1 U	1.4 U	3.7 U	3.3 U	2.7 U	6.9 U
Acetone	0.7 U	4.9 U4	46.3 U2	959	39.2	16.5	7.3 U4	10 U4	53	1.4 U	3.7 U	28 U4	12 U4	6.9 U
Benzene	2.6	1.5 U	2.5	17	22.2	1.7	3	6.5	1.7	1.4 U	3.1 J	3.3 U2	2.7 U	85.7
Benzyl Chloride	0.7 U	1.5 UJ0	2.1 UJ0	5.2 U	1.5 U	1.4 U	0.7 U	0.87 J	1.1 U	1.4 U	3.7 U	3.3 U	2.7 U	6.9 U
Bromodichloromethane	0.7 U	1.5 U	2.1 U	5.2 U	1.5 U	1.4 U	0.7 U	9.9	1.1 U	1.4 U	3.7 U	2.5 J	2.7 U	6.9 U
Bromoform	0.7 U	1.5 UJ0	2.1 UJ0	5.2 U	1.5 U	1.4 U	0.7 U	1.3 J	1.1 U	1.4 U	3.7 U	3.3 U	2.7 U	6.9 U
Bromomethane	0.7 U	1.5 U	2.1 U	5.2 U	1.5 U	1.4 U	0.7 U	3.4 U	1.1 U	1.4 U	3.7 U	3.3 U	2.7 U	6.9 U
Carbon Disulfide	0.7 U	9	2.1 U	1.2 J	2.7	1.2 J	1.3	4.3	6.5	1.4 U	2.9 J	3.3 U	2.6 J	0.8 J
Carbon Tetrachloride	0.7 U	1.5 U	2.1 U	5.2 U	1.5 U	1.4 U	0.7 U	6.8	1.1 U	1.4 U	3.7 U	2 J	2.7 U	6.9 U
Chlorobenzene	0.7 U	1.5 UJ0	2.1 UJ0	5.2 U	1.5 U	1.4 U	0.7 U	1.2 J	1.1 U	1.4 U	3.7 U	3.3 U	2.7 U	224.2
Chloroethane	0.7 U	1.5 U	2.1 U	423	1.5 U	1.4 U	0.7 U	1.5 J	1.1 U	1.4 U	3.7 U	3.3 U	2.7 U	28.4
Chloroform	0.7 U	1.5 U	2.1 U	5.2 U	1.5 U	1.4 U	0.7 U	23	1.1 U	1.4 U	3.7 U	3.3 U	2.7 U	6.9 U
Chloromethane	0.7 U	1.5 U	2.1 U2	5.2 U	1.5 U	1.4 U	0.7 U	3.4 U2	1.1 U	1.4 U2	3.7 U	3.3 U	2.7 U	2.9 J

TABLE 7: SOIL-GAS SURVEY LABORATORY RESULTS (Continued)

Parcel E Nonstandard Data Gaps Investigation, Landfill Gas Characterization, Hunters Point Shipyard, San Francisco, California

Sample ID:	SG07SG001	SG07SG002	SG07SG003	SG08SG001	SG08SG002	SG08SG003	SG11SG001	SG12SG001	SG15SG001	SG21SG001	SG21SG002*	SG24SG001	SG24SG002*	SG25SG001
Point Name:	SG07	SG07A	SG07A	SG08	SG08A	SG08A	SG11	SG12	SG15	SG21A	SG21A	SG24	SG24	SG25
Sample Type:	Soil Gas	Soil Gas	Soil Gas	Soil Gas	Soil Gas	Soil Gas	Soil Gas	Soil Gas	Soil Gas	Soil Gas	Soil Gas	Soil Gas	Soil Gas	Soil Gas
Sample Depth (feet bgs):	10	5	10	12	4	8	8	10	4.5	6.5	6.5	3.5	3.5	5
EPA TO-14A (ppbv) (Continued)														
cis-1,2-Dichloroethene	1.6	1.5 U	2.1 U	6.6	1.5 U	1.4 U	10	21	1.1	1.4 U	3.7 U	3.3 U	2.7 U	4.6 J
cis-1,3-Dichloropropene	0.7 U	1.5 U	2.1 U	5.2 U	1.5 U	1.4 U	0.7 U	0.86 J	1.1 U	1.4 U	3.7 U	3.3 U	2.7 U	6.9 U
Cyclohexane	128	2.2	3.4	373	85.5	14.8	7.6	45	29	1.4 U	3.7 U	4.2	2.7 U	597.5
Dibromochloromethane	0.7 U	1.5 U	2.1 U	5.2 U	1.5 U	1.4 U	0.7 U	1.1 J	1.1 U	1.4 U	3.7 U	3.3 U	2.7 U	6.9 U
Dichlorodifluoromethane	1.7	1.5 U	2.1 U	4 J	50	2.2	1 U2	3.4 U2	1.1	2.7 U2	3.7 U	3.3 U	2.7 U	49.1
Ethanol	0.7 U	1.5 U	7.3 U2	5.2 U	3.6	1.4 U	0.7 U	28	13	1.4 U	3.7 U	5.2 U2	2.7 U	7.6
Ethylbenzene	0.7 U	1.5 UJ0	1.9 J0	5.3	1.4 J	1.4 U	0.7 U	1.1 J	2	1.4 U	2.2 J	3.3 U	2.7 U2	10.5
Heptane	30	224.3	6.5	85	110.9	2.9	5.1	1.9 J	5.3	28	305.2	7.4	2.7 U2	375.7
Hexachlorobutadiene	0.7 U	2.1 J0	2.1 UJ0	5.2 U	5.3	1.4 U	0.7 U	2 J	1.1	4 U2	9.3 U2	3.3 U	2.7 U	6.9 U
Hexane	148	243.2	6.8 U2	734	29	10.1	18	19	43	45.2	489.6	18 U2	18 U2	881.7
Isopropyl Alcohol	0.7 U	1.5 U	2.1 U	1.3 J	1.5 U	1.4 U	0.7 U	9.5	1.1 U	1.4 U	3.7 U	3.3 U	2.7 U	6.9 U
m,p-Xylenes	2	1 J0	6.7 J0	35	7.5	1.4 U	0.7 U	2.4 J	10	1.9	7.3	2.2 J	2.7 U	7.4
Methylene Chloride	0.7 U	3.2 U4	3.4 U4	10 U4	15.4	2.3 U4	8.9 U4	38 U4	51	5.8 U4	16.5 U4	3.8 U4	6.8 U4	10.5 U4
Methyl-Tert Butyl Ether	0.7 U	1.5 U	2.1 U	5.2 U	1.5 U	1.4 U	0.7 U	3.4 U	1.1 U	1.4 U	3.7 U	3.3 U	2.7 U	6.9 U
o-Xylene	0.7 U	1.5 UJ0	4.1 J0	36	2.8	1.4 U	0.7 U	1.2 J	15	0.8 J	3.2 J	2.8 J	2.7 U	3.1 J
Propylene	12	50.5	25.1	305	43.3	20.2	31	4.1	37	83.7	967.6	77	11 U2	1250.9
Styrene	0.7 U	1.5 UJ0	2.1 UJ0	5.2 U	1.5 U	1.4 U	0.7 U	0.9 J	1.1 U	1.4 U	3.7 U	3.3 U	2.7 U	1 J
t-1,2-Dichloroethylene	0.7 U	1.5 U	2.1 U	1.6 J	1.5 U	1.4 U	1.4	4.3	1.1 U	1.4 U	3.7 U	3.3 U	2.7 U	1.8 J
t-1,3-Dichloropropene	0.7 U	1.5 U	2.1 U	5.2 U	1.5 U	1.4 U	0.7 U	0.9 J	1.1 U	1.4 U	3.7 U	3.3 U	2.7 U	6.9 U
Tetrachloroethylene	0.7 U	1.5 U	2.1 U	8.7	1.5 U	1.4 U	6.3	3290	9.4	1.4 U	3.7 U	3.3 U	2.7 U	3.7 J
Tetrahydrofuran	0.7 U	1.5 U	2.1 U	2.1 J	1.5 U	1.4 U	0.7 U	1 J	1.1 U	1.4 U	3.7 U	3.3 U	2.7 U	2.7 J
Toluene	1.5 U2	0.8 J	3.1	5.2 U2	14.4	1.1 J	3 U2	6.8	14	1.4 U	14.7	4.2 U2	10 U2	3.7 J
Trichloroethene	0.7 U	1.5 U	2.1 U	2.4 J	1.5 U	1.4 U	3.1	1164	4.8	1.4 U	3.7 U	3.2 J	2.7 U	9.4
Trichlorofluoromethane	0.7 U	1.5 U	2.1 U	5.2 U	1.5 U	1.4 U	1	786	1.1 U	1.4 U	3.7 U	3.3 U	2.7 U	6.9 U
Vinyl Acetate	0.7 U	1.5 U	2.1 U	5.2 U	1.5 U	1.4 U	0.7 U	3.4 U	1.1 U	1.4 U	3.7 U	3.3 U	2.7 U	6.9 U
Vinyl Chloride	0.7 U	1.5 U	2.1 U	10	1.5 U	1.4 U	4.1	0.71 J	4.8	1.4 U	3.7 U	3.3 U	2.7 U	9.9
Total VOCs	325.90	551.30	62.00	4,004.30	543.60	93.20	100.60	10,921.26	403.50	173.80	1,804.80	176.30	7.10	3,824.30

TABLE 7: SOIL-GAS SURVEY LABORATORY RESULTS (Continued)

Parcel E Nonstandard Data Gaps Investigation, Landfill Gas Characterization, Hunters Point Shipyard, San Francisco, California

Sample ID:	SG25SG002*	SG25SG003	SG25SG004	SG25SG005	SG25SG006	SG25SG007	SG25SG008	SG25SG009	SG25SG010	SG26SG001	SG27SG001	SG27SG002	SGFBSG001	SGFBSG002
Point Name:	SG25	SG25	SG25A	SG25A	SG25A	SG25B	SG25C	SG25D	SG25D	SG26A	SG27A	SG27B	Field Blank	Field Blank
Sample Type:	Soil Gas	Soil Gas	Soil Gas	Soil Gas	Soil Gas	Soil Gas	Soil Gas	Soil Gas	Soil Gas	Soil Gas	Soil Gas	Soil Gas	Soil Gas	Soil Gas
Sample Depth (feet bgs):	5	11	6	12	12	3.5	3.3	3.5	12	8	6	6	NA	NA
EPA Method 25C (ppmv)														
Methane	630,000 J8	658,600 J8	622,759 J8	566,784 J8	599,313 J8	321,583 J8	0 U	313	3,645 J8	361,593 J8	186 U2	504,192 J8	7	207
Nonmethane VOC	52	52.2	60	22	57	25	0.14 U	0.15 U	0.2 U	79	0.14 U	119	0.17 U	7
EPA Method 3C (%)														
Carbon Dioxide	22.59 J8	24	23 J8	21	23 J8	11	1.72	0.15 U2	0.2 U	13.81	5.88	21.11	0.17 U	0.17 U
Carbon Monoxide	0.14 U	0.16 U	0.14 U	0.14 U	0.14 U	0.18 U	0.14 U	0.15 U	0.2 U	0.13 U	0.14 U	0.14 U	0.17 U	0.17 U
Methane	63.01 J8	66 J8	62 J8	56 J8	59 J8	30	0.14 U	0.15 U	0.2 U	36.16	0.14 U	50.42 J8	0.17 U	0.17 U
Nitrogen	11.1	9	11	19	14	48	79.45	79.72	80.49	41.09	91.82 J7	24.14	80	79.2
Oxygen	2.07	1.4	1.8	3.9	2.6	11	17.71 J8	19.42 J8	20.9	10.55	0.14 U	2.29	19.6 J8	20 J8
EPA TO-14A (ppbv)														
1,1,1-Trichloroethane	7 U	0.9 J	0.9 J	0.7 J	0.7 J	0.9 J	1.4 U	1.53 U	1.97 U	6.71 U	0.68 U	3.44 U	0.7 U	0.7 U
1,1,2,2-Tetrachloroethane	7 U	8 U	1.4 U	7.1 U	6.9 U	8.5 U	1.4 U	1.53 U	1.97 U	6.71 U	0.68 U	3.44 U	0.7 U	0.7 U
1,1,2-Trichloro-1,2,2-Trifluoro	1.3 J	1.3 J	1.4 U	0.8 J	0.7 J	1 J	1.4 U	1.53 U	1.97 U	6.71 U	0.68 U	3.44 U	0.7 U	0.7 U
1,1,2-Trichloroethane	0.9 J	8 U	1.4 U	0.9 J	0.8 J	8.5 U	1.4 U	1.53 U	1.97 U	6.71 U	0.68 U	3.44 U	0.7 U	0.7 U
1,1-Dichloroethane	4.2 J	6.7 J	1.4 U	5.1 J	5.6 J	1.1 J	1.4 U	1.53 U	1.97 U	4.08 J	0.68 U	5.07 J3	0.7 U	0.7 U
1,1-Dichloroethylene	7 U	8 U	1.4 U	7.1 U	6.9 U	8.5 U	1.4 U	1.53 U	1.97 U	6.71 U	0.68 U	3.44 U	0.7 U	0.7 U
1,2,4-Trichlorobenzene	2.4 J	4.6 J	1.4 U	1.8 J	2.2 J	1.6 J	1.4 U	1.53 U	1.97 U	6.12 J	0.78	3.44 U	0.7 U	0.7 U
1,2,4-Trimethylbenzene	4.7 J	4.6 J	1.4 U	2.5 J	2.4 J	1 J	1.4 U	2.47 U2	4.61 U2	71.53	1.32 U2	30.53 J3	1.4	1
1,2-Dibromoethane	7 U	8 U	1.4 U	7.1 U	6.9 U	8.5 U	1.4 U	1.53 U	1.97 U	6.71 U	0.68 U	3.44 U	0.7 U	0.7 U
1,2-Dichloro-1,1,2,2-Tetrafluoroethane	52.7	56.6	1.4 U	39.7	41.9	30.7	1.4 U	1.53 U	1.66 J	50.79	2.92	78.25 J3	0.7 U	0.7 U
1,2-Dichlorobenzene	2 J	2.1 J	1.4 U	1.1 J	1.2 J	1.1 J	1.4 U	1.5 U2	2.46 U2	8.18	0.68 U	3.44 U	0.7 U	0.7 U
1,2-Dichloroethane	2.4 J	2.9 J	1.4 U	2 J	2.2 J	8.5 U	1.4 U	1.53 U	1.97 U	6.71 U	0.68 U	3.44 U	0.7 U	0.7 U
1,2-Dichloropropane	7 U	8 U	1.4 U	0.9 J	0.7 J	8.5 U	1.4 U	1.53 U	1.97 U	6.71 U	0.68 U	3.44 U	0.7 U	0.7 U
1,3,5-Trimethylbenzene	2.9 J	3.5 J	1.4 U	3.9 J	1.9 J	8.5 U	1.4 U	1.53 U	1.97 U	67.67	0.68 U	40.44 J3	0.7 U	0.7 U
1,3-Butadiene	7 U	8 U	1.4 U	7.1 U	6.9 U	0.9 J	1.4 U	3.08	7.82	6.71 U	0.68 U	3.44 U	0.7 U	0.7 U
1,3-Dichlorobenzene	1.8 J	1.6 J	1.4 U	1.1 J	1.1 J	1.1 J	1.4 U	1.5 U2	2 U2	1.87 J	0.68 U	3.44 U	0.7 U	0.7 U
1,4-Dichlorobenzene	186.1	8 U	1.3 J	1.5 J	1.3 J	1.2 J	1.4 U	1.5 U2	2.5 U2	6.18 J	0.68 U	3.44 U	0.7 U	0.7 U
1,4-Dioxane	7 U	8 U	1.4 U	7.1 U	6.9 U	8.5 U	1.4 U	1.53 U	1.97 U	6.71 U	0.68 U	3.44 U	0.7 U	0.7 U
2-Butanone	7 U4	8 U4	1.4 U	7.1 U	6.9 U	8.5 U	1.4 U4	1.53 U	23.31 U2	30.47 U4	0.68 U	3.44 U	12 U4	0.7 U
2-Hexanone	7 U	8 U	10.9	7.1 U	6.9 U	8.5 U	1.4 U	1.53 UJ7	1.97 UJ7	6.71 U	0.68 U	3.44 U	0.7 U	0.7 U
4-Ethyltoluene	1.8 J	1.6 J	1.4 U	1.1 J	6.9 U	8.5 U	1.4 U	0.97 J	1.79 J	15.14	0.68 U	12.71 J3	0.7 U	0.7 U
4-Methyl-2-Pentanone	179.8	8 U	1.4 U	7.1 U	6.9 U	8.5 U	1.4 U	1.53 U	1.97 U	6.71 U	0.68 U	3.44 U	0.7 U	0.7 U
Acetone	7 U	8 U	19.3 U2	7.1 U	6.9 U	20.1 U4	6.25 U4	19.33 U2	161.75 U2	295.37	2.41 U4	81.95 J3	6 U4	2.6 U4
Benzene	87	109.4	1.4 U	5.6 J	5.5 J	2.9 J	1.4 U	1.62	3.63	38.56	0.68 U	23.09 J3	0.7 U	0.7 U
Benzyl Chloride	7 U	8 U	1.4 U	7.1 U	6.9 U	8.5 U	1.4 U	1.53 U	1.97 U	6.71 U	0.68 U	3.44 U	0.7 U	0.7 U
Bromodichloromethane	7 U	8 U	1.4 U	7.1 U	6.9 U	8.5 U	1.4 U	1.53 U	1.97 U	6.71 U	0.68 U	3.44 U	0.7 U	0.7 U
Bromoform	7 U	8 U	1.4 U	7.1 U	6.9 U	8.5 U	1.4 U	1.53 U	1.97 U	6.71 U	0.68 U	3.44 U	0.7 U	0.7 U
Bromomethane	7 U	8 U	1.4 U	0.8 J	6.9 U	0.9 J	1.4 U	1.53 U	1.97 U	6.71 U	0.68 U	3.44 U	0.7 U	0.7 U
Carbon Disulfide	1.1 J	0.9 J	8.2	1.1 J	6.9 U	1 J	1.4 U	1.53 U	2.07 U2	3.28 J	0.68 U	3.44 U	0.7 U	0.7 U
Carbon Tetrachloride	7 U	8 U	1.4 U	7.1 U	6.9 U	8.5 U	1.4 U	1.53 U	1.97 U	6.71 U	0.68 U	3.44 U	0.7 U	0.7 U
Chlorobenzene	161.1	8 U	1.4 U	7.1 U	6.9 U	8.5 U	1.4 U	1.53 U	1.97 U	6.71 U	0.68 U	3.44 U	0.7 U	0.7 U
Chloroethane	26.3	32.9	1.4 U	20.7	21.5	1.8 J	1.4 U	1.53 U	1.97 U	63.38	0.68 U	53.43 J3	0.7 U	0.7 U
Chloroform	7 U	8 U	1 J	7.1 U	6.9 U	3.2 J	2.55	1.53 U	1.97 U	6.71 U	0.68 U	3.44 U	0.7 U	0.7 U
Chloromethane	2.5 J	2.7 J	1.4 U2	7.1 U2	6.9 U2	8.5 U2	1.4 U	1.64 U2	2.03 U2	4.81 J	0.68 U	2.57 J3	0.78	0.7 U

TABLE 7: SOIL-GAS SURVEY LABORATORY RESULTS (Continued)

Parcel E Nonstandard Data Gaps Investigation, Landfill Gas Characterization, Hunters Point Shipyard, San Francisco, California

Sample ID:	SG25SG002*	SG25SG003	SG25SG004	SG25SG005	SG25SG006	SG25SG007	SG25SG008	SG25SG009	SG25SG010	SG26SG001	SG27SG001	SG27SG002	SGFBSG001	SGFBSG002
Point Name:	SG25	SG25	SG25A	SG25A	SG25A	SG25B	SG25C	SG25D	SG25D	SG26A	SG27A	SG27B	Field Blank	Field Blank
Sample Type:	Soil Gas	Soil Gas	Soil Gas	Soil Gas	Soil Gas	Soil Gas	Soil Gas	Soil Gas	Soil Gas	Soil Gas	Soil Gas	Soil Gas	Soil Gas	Soil Gas
Sample Depth (feet bgs):	5	11	6	12	12	3.5	3.3	3.5	12	8	6	6	NA	NA
EPA TO-14A (ppbv) (Continued)														
cis-1,2-Dichloroethene	4.4 J	7 J	1.4 U	5.8 J	6.3 J	1.3 J	1.4 U	1.53 U	1.97 U	7.49	0.68 U	11.05 J3	1.4	0.7 U
cis-1,3-Dichloropropene	7 U	8 U	1.4 U	7.1 U	6.9 U	8.5 U	1.4 U	1.53 U	1.97 U	6.71 U	0.68 U	3.44 U	0.7 U	0.7 U
Cyclohexane	590.3	602.6	1.4 U	452.6	463.4	51.8	0.76 J	1.53 U	3.17	133.01	0.68 U	165.69 J3	0.7 U	0.7 U
Dibromochloromethane	7 U	8 U	1.4 U	7.1 U	6.9 U	8.5 U	1.4 U	1.53 U	1.97 U	6.71 U	0.68 U	3.44 U	0.7 U	0.7 U
Dichlorodifluoromethane	43.9	49.1	1.4 U2	82.2	85	6.2 J	0.86 J	1.53 U	1.97 U	34.5	6.1	12.34 J3	0.83	0.7 U
Ethanol	1.4 J	8 U	1.4 U	7.1 U	0.9 J	9.9	1.4 U	2,960.14	6,362.09	25.65	0.68 U	2.19 J3	1.2	0.7 U
Ethylbenzene	8.5	5.1 J	1.4 U	7.1	3.7 J	1.9 J	1.4 U	1.53 U	1.67 J	30.03	0.68 U	8.59 J3	0.7 U	0.7 U
Heptane	368.7	321.5	2.6	108.7	117.1	2.3 J	1.4 U	1.55 U2	6.68 U2	119.71	0.68 U	114.78 J3	0.7 U	0.7 U
Hexachlorobutadiene	1.2 J	1.3 J	1.4 U	7.1 U2	6.9 U2	8.5 U2	1.4 U	9.99	1.97 U	4.56 J	0.68 U	3.31 J3	0.7 U	0.7 U
Hexane	802	940.4	105.3	492.3	526.9	10.3	0.87 J	1.53 U	34.21 U2	249.81	0.68 U	217.2 J3	0.7 U	2.6
Isopropyl Alcohol	7 U	8 U	1.4 U	7.1 U	0.8 J	8.5 U	1.4 U	203.39 U2	632.22	6.71 U	0.68 U	3.44 U	0.7 U	0.7 U
m,p-Xylenes	5.4 J	3.7 J	1.5	11.6	4.7 J	3.5 J	1.4 U	1.5 U2	3.98 U2	136.5	0.68 U	54.17 J3	0.7 U	0.7 U
Methylene Chloride	9.7 U4	13 U4	117.7	14.6 U4	10.6 U4	12.2 U4	2.61 U4	3.43 U4	9.42 U4	25.18 U4	1.38 U4	6.38 U4J3	1.4 U4	2 U4
Methyl-Tert Butyl Ether	7 U	8 U	1.4 U	7.1 U	6.9 U	8.5 U	1.4 U	1.53 U	1.97 U	6.71 U	0.68 U	3.44 U	0.7 U	0.7 U
o-Xylene	1.9 J	2.2 J	1.4 U	4.8 J	2.9 J	1.7 J	1.4 U	1.53 U	1.95 J	109.05	0.68 U	58.5 J3	0.7 U	0.7 U
Propylene	1067.9	676.1	1.4 U1	20.9	23.5	180.1	2.22 U1	1.53 U	174.9	520.47	2.66 U1	40.15 J3	0.7 U	1
Styrene	7 U	8 U	1.4 U	7.1 U	6.9 U	8.5 U	1.4 U	1.53 U	2 U2	3.44 J	0.68 U	1.54 J3	0.7 U	0.7 U
t-1,2-Dichloroethylene	1.6 J	2.4 J	1.4 U	1.4 J	1.5 J	8.5 U	1.4 U	1.53 U	1.97 U	6.71 U	0.68 U	3.44 U	0.7 U	0.7 U
t-1,3-Dichloropropene	7 U	8 U	1.4 U	7.1 U	6.9 U	8.5 U	1.4 U	1.53 U	1.97 U	6.71 U	0.68 U	3.44 U	0.7 U	0.7 U
Tetrachloroethylene	7 U	1.3 J	1.4 U	29.9	1 J	8.5 U	1.4 U	1.53 U	1.97 U	6.6 J	0.68 U	3.44 U	0.7 U	0.7 U
Tetrahydrofuran	2.3 J	1.1 J	1.4 U	7.1 U	6.9 U	8.5 U	1.4 U	1.53 U	1.97 U	6.71 U	0.68 U	3.44 U	0.7 U	0.7 U
Toluene	4.3 J	2.1 J	12.1	9.4	6.9 U2	9.5	0.84 J	1.72 U2	4.53 U2	46.26	0.68 U	8.41 J3	1.1	1.1
Trichloroethene	2 J	2.7 J	1.4 U	53	3.9 J	2.2 J	1.4 U	1.53 U	1.97 U	5.91 J	0.68 U	2.39 J3	0.7 U	0.7 U
Trichlorofluoromethane	7 U	8 U	1.4 U	7.1 U	6.9 U	0.9 J	1.4 U	1.53 U	1.97 U	6.71 U	0.68 U	3.44 U	0.7 U	0.7 U
Vinyl Acetate	7 U	8 U	1.4 U	7.1 U	6.9 U	8.5 U	1.4 U	1.53 U	1.97 U	6.71 U	0.68 U	3.44 U	0.7 U	0.7 U
Vinyl Chloride	9.1	10.1	1.4 U	7.4	8.2	1.6 J	1.4 U	1.53 U	1.97 U	11.56	0.68 U	4.82 J3	0.7 U	0.7 U
Total VOCs	3,635.90	2,861.00	261.50	1,378.40	1,339.50	333.60	5.88	2,975.80	7,190.90	2,081.51	9.80	1,033.17	6.71	5.70

TABLE 7: SOIL-GAS SURVEY LABORATORY RESULTS (Continued)

Parcel E Nonstandard Data Gaps Investigation, Landfill Gas Characterization, Hunters Point Shipyard, San Francisco, California

Sample ID:	SGFBSG003	SGFBSG004	SGFBSG005	SGFBSG006	SGFBSG007	SGFBSG008	SGFBSG009	SGFBSG010
Point Name:	Field Blank	Field Blank	Field Blank	Field Blank	Field Blank	Field Blank	Field Blank	Field Blank
Sample Type:	Soil Gas	Soil Gas	Soil Gas	Soil Gas	Soil Gas	Soil Gas	Soil Gas	Soil Gas
Sample Depth (feet bgs):	NA	NA	NA	NA	NA	NA	NA	NA
EPA Method 25C (ppmv)								
Methane	711 J8	0 U	0 U	200	0 U	254	30	0 U
Nonmethane VOC	0.14 U	0.15 U	0.14 U	0.14 U	2.5	0.14 U	0.14	0.18 U
EPA Method 3C (%)								
Carbon Dioxide	0.14 U	0.15 J	0.14 U	0.1 J	0.1 U	0.11 J	0.05 J	0.05 J
Carbon Monoxide	0.14 U	0.15 U	0.14 U	0.14 U	0.15 U	0.14 U	0.14 U	0.14 U
Methane	0.14 U	0.15 U	0.14 U	0.14 U	0.15 U	0.14 U	0.14 U	0.14 U
Nitrogen	79.9	81	81	80	81	78.07	81	76.57
Oxygen	19 J8	23 J8	19 J8	19 J8	19 J8	21.56	19.2 J8	18.11 J8
EPA TO-14A (ppbv)								
1,1,1-Trichloroethane	1.4 U	1.4 U	1.4 U	1.4 U	1.3 U	0.67 U	1.4 U	1.38 U
1,1,2,2-Tetrachloroethane	1.4 U	1.4 U	1.4 U	1.4 U	1.3 U	0.67 U	1.4 U	1.38 U
1,1,2-Trichloro-1,2,2-Trifluoro	1.4 U	1.4 U	1.4 U	1.4 U	1.3 U	0.67 U	1.4 U	1.38 U
1,1,2-Trichloroethane	1.4 U	1.4 U	1.4 U	1.4 U	1.3 U	0.67 U	1.4 U	1.38 U
1,1-Dichloroethane	1.4 U	1.4 U	1.4 U	1.4 U	1.3 U	0.67 U	1.4 U	1.38 U
1,1-Dichloroethylene	1.4 U	1.4 U	1.4 U	1.4 U	1.3 U	0.67 U	1.4 U	1.38 U
1,2,4-Trichlorobenzene	1.4 U	1.4 U	1.4 U	1.4 U	1.3 U	0.67 U	1.4 U	1.38 U
1,2,4-Trimethylbenzene	1.4 U	1.4 U	1.4 U	1.4 U	0.8 J	1.11	1.4 U	2.76
1,2-Dibromoethane	1.4 U	1.4 U	1.4 U	1.4 U	1.3 U	0.67 U	1.4 U	1.38 U
1,2-Dichloro-1,1,2,2-Tetrafluoroethane	1.4 U	1.4 U	1.4 U	1.4 U	1.3 U	0.67 U	1.4 U	1.38 U
1,2-Dichlorobenzene	1.4 U	1.4 U	1.4 U	1.4 U	1.3 U	0.67 U	1.4 U	1.16 J
1,2-Dichloroethane	1.4 U	1.4 U	1.4 U	1.4 U	1.3 U	0.67 U	1.4 U	1.38 U
1,2-Dichloropropane	1.4 U	1.4 U	1.4 U	1.4 U	1.3 U	0.67 U	1.4 U	1.38 U
1,3,5-Trimethylbenzene	1.4 U	1.4 U	1.4 U	1.4 U	1.3 U	0.67 U	1.4 U	1.38 U
1,3-Butadiene	1.4 U	1.4 U	1.4 U	1.4 U	1.3 U	0.67 U	1.4 U	1.38 U
1,3-Dichlorobenzene	1.4 U	1.4 U	1.4 U	1.4 U	1.3 U	0.67 U	1.4 U	1.05 J
1,4-Dichlorobenzene	0.88 J	1.4 U	1.4 U	1.4 U	1.3 U	0.67 U	1.4 U	1.89
1,4-Dioxane	1.4 U	1.4 U	1.4 U	1.4 U	1.3 U	0.67 U	1.4 U	1.38 U
2-Butanone	1.5 U4	1.4 U	1.4 U	1.4 U	1.3 U4	0.67 U	1.4 U	9.1
2-Hexanone	1.4 U	1.4 U	1.4 U	1.4 U	1.3 U	0.67 U	1.4 U	1.38 UJ7
4-Ethyltoluene	1.4 U	1.4 U	1.4 U	1.4 U	1.3 U	0.67 U	1.4 U	1.38 U
4-Methyl-2-Pentanone	1.4 U	1.4 U	1.4 U	1.4 U	1.3 U	0.67 U	1.4 U	1.38 U
Acetone	5.1 U4	9.4	2.8 U4	3.1 U4	7.7	2.75 U4	10	57.72
Benzene	0.73 J	1.4 U	1.4 U	1.4 U	0.9 J	0.67 U	1.4 U	1.38 U
Benzyl Chloride	1.4 U	1.4 U	1.4 U	1.4 U	1.3 U	0.67 U	1.4 U	1.38 U
Bromodichloromethane	1.4 U	1.4 U	1.4 U	1.4 U	1.3 U	0.67 U	1.4 U	1.38 U
Bromoform	1.4 U	1.4 U	1.4 U	1.4 U	1.3 U	0.67 U	1.4 U	1.38 U
Bromomethane	1.4 U	1.4 U	1.4 U	1.4 U	1.3 U	0.67 U	1.4 U	1.38 U
Carbon Disulfide	1.4 U	0.7 J	1.4 U	1.4 U	1.3 U	0.67 U	1.4 U	41.27
Carbon Tetrachloride	1.4 U	1.4 U	1.4 U	1.4 U	1.3 U	0.67 U	1.4 U	1.38 U
Chlorobenzene	1.4 U	1.4 U	1.4 U	1.4 U	1.3 U	0.67 U	1.4 U	1.38 U
Chloroethane	1.4 U	1.4 U	1.4 U	1.4 U	1.3 U	0.67 U	1.4 U	1.38 U
Chloroform	1.4 U	1.4 U	1.4 U	1.4 U	1.3 U	0.67 U	1.4 U	1.38 U
Chloromethane	0.78 J	1 J	0.8 J	1.4 U	0.9 J	0.67 U	0.8 J	1.74

TABLE 7: SOIL-GAS SURVEY LABORATORY RESULTS (Continued)

Parcel E Nonstandard Data Gaps Investigation, Landfill Gas Characterization, Hunters Point Shipyard, San Francisco, California

Sample ID:	SGFBSG003	SGFBSG004	SGFBSG005	SGFBSG006	SGFBSG007	SGFBSG008	SGFBSG009	SGFBSG010
Point Name:	Field Blank	Field Blank	Field Blank	Field Blank	Field Blank	Field Blank	Field Blank	Field Blank
Sample Type:	Soil Gas	Soil Gas	Soil Gas	Soil Gas	Soil Gas	Soil Gas	Soil Gas	Soil Gas
Sample Depth (feet bgs):	NA	NA	NA	NA	NA	NA	NA	NA
EPA TO-14A (ppbv) (Continued)								
cis-1,2-Dichloroethene	1.4 U	1.4 U	1.4 U	1.4 U	1.3 U	0.67 U	1.4 U	1.38 U
cis-1,3-Dichloropropene	1.4 U	1.4 U	1.4 U	1.4 U	1.3 U	0.67 U	1.4 U	1.38 U
Cyclohexane	0.78 J	1.4 U	1.4 U	1.4 U	1.3 U	0.67 U	1.4 U	1.38 U
Dibromochloromethane	1.4 U	1.4 U	1.4 U	1.4 U	1.3 U	0.67 U	1.4 U	1.38 U
Dichlorodifluoromethane	0.79 J	1.1 J	0.8 J	0.7 J	0.9 J	0.77	0.9 J	0.86 J
Ethanol	6.9	8.9	1.4 U	1.4 U	4.6	0.67 U	43.8	52.15
Ethylbenzene	0.86 J	1.4 U	1.4 U	1.4 U	1.3 U	0.67 U	1.4 U	1.38 U
Heptane	0.86 J	1.4 U	1.4 U	1.4 U	1.3 U	0.67 U	1.4 U	5.56
Hexachlorobutadiene	1.4 U	1.4 U	0.7 J	1.4 U	1.3 U	0.67 U	3.4	1.38 U
Hexane	8.5	4.7	1.4 U	0.9 J	0.7 J	1.26	1.4 U	165.81
Isopropyl Alcohol	1.4 U	6.7	1.4 U	1.4 U	1.3 U	0.67 U	1.4 U	44.14
m,p-Xylenes	1.4 U	1.4 U	1.4 U	1.4 U	2.1	2.16	1.4 U	1.53
Methylene Chloride	2.5 U4	5.7 U4	1.9 U4	2.2 U4	2.5 U4	1.52 U4	3.9 U4	320.1
Methyl-Tert Butyl Ether	1.4 U	1.4 U	1.4 U	1.4 U	0.8 J	0.67 U	1.4 U	1.38 U
o-Xylene	1.4 U	1.4 U	1.4 U	1.4 U	0.9 J	0.97	1.4 U	1.38 U
Propylene	10	4.6	0.9 U1	1.4 U1	2.3 U1	1.61 U1	3.9	1.19 J
Styrene	1.36 U	1.4 U	1.4 U	1.4 U	1.3 U	0.67 U	1.4 U	1.88
t-1,2-Dichloroethylene	1.4 U	1.4 U	1.4 U	1.4 U	1.3 U	0.67 U	1.4 U	1.38 U
t-1,3-Dichloropropene	1.4 U	1.4 U	1.4 U	1.4 U	1.3 U	0.67 U	1.4 U	1.38 U
Tetrachloroethylene	1.4 U	1.4 U	1.4 U	1.4 U	1.3 U	0.67 U	1.4 U	1.38 U
Tetrahydrofuran	1.4 U	1.4 U	1.4 U	1.4 U	1.3 U	0.67 U	1.4 U	1.38 U
Toluene	5	1.4 U	1.4 U	1 J	2.1	0.79	0.9 J	41.27
Trichloroethene	1.4 U	1.4 U	1.4 U	1.4 U	1.3 U	0.67 U	1.4 U	1.38 U
Trichlorofluoromethane	1.4 U	1.4 U	1.4 U	1.4 U	1.3 U	0.67 U	1.4 U	1.3 J
Vinyl Acetate	1.4 U	1.4 U	1.4 U	1.4 U	1.3 U	0.67 U	1.4 U	1.38 U
Vinyl Chloride	1.4 U	1.4 U	1.4 U	1.4 U	1.3 U	0.67 U	1.4 U	1.38 U
Total VOCs	36.08	37.10	2.30	2.60	22.40	7.06	63.70	752.48

Notes: EPA Method 25C initially analyzes for methane and then converts all of the nomethane VOCs to methane and reports them as nonmethane VOCs as methane.

bgs	Below ground surface
EPA	U.S. Environmental Protection Agency
ID	Identification
NA	Not available
ppbv	Parts per billion by volume
ppmv	Parts per million by volume
TO-14	Toxic Organics-14
VOC	Volatile organic compound

Qualifiers and Comment Codes:

J	Estimated
J0	Internal standard problems
J3	Surrogate/laboratory control sample/matrix spike problems
J7	Calibration problems
J8	Calibration range problems
U	Nondetected
U1	Method blank problems
U2	Field blank problems
U4	Lab contaminant
UJ0	Internal standard problems
UJ7	Calibration problems

TABLE 8: WEEKLY GAS MONITORING FIELD SCREENING DATA

Parcel E Nonstandard Data Gaps Investigation, Landfill Gas Characterization, Hunters Point Shipyard, San Francisco, California

Location Identification	Date	Screen Interval (feet bgs)	Methane (percent by volume in air)	VOCs Background	VOCs Above Background (ppm)	Barometric Pressure (inches mercury)	Pressure in Gas Probe (inches Mercury)	Probe Gas Temperature (ºF)	Sample Number	Duplicate Sample Number
GMP01	4/22/02	6.0 to 13.5	28.5	NR	NA	30.01	-0.6	69.80	GMP01SG001	--
GMP02	4/22/02	6.0 to 13.5	57.8	NR	NA	30.01	-0.6	69.80	GMP02SG001	--
GMP03	4/22/02	6.0 to 13.5	62.7	NR	0.0	30.01	-0.7	69.90	GMP03SG001	--
GMP04	4/22/02	6.0 to 13.5	60.2	NR	0.0	30.01	-0.7	69.62	GMP04SG001	--
GMP05	4/22/02	6.0 to 12.5	46.2	NR	0.0	30.01	-0.7	69.80	GMP05SG001	--
GMP06	4/22/02	6.0 to 13.5	67.2	NR	0.0	30.02	-0.8	72.50	GMP06SG001	--
GMP07	4/22/02	6.0 to 13.5	62.3	NR	0.0	30.02	-0.8	71.60	GMP07SG001	GMP07SG002
GMP08	4/22/02	6.0 to 12.5	62.1	NR	0.0	30.02	-0.8	71.60	GMP08SG001	--
GMP09	4/22/02	6.0 to 9.5	0.1	NR	0.0	30.02	-0.8	75.20	--	--
GMP10	4/22/02	4.0 to 6.5	0.1	NR	0.0	30.09	0.5	68.00	--	--
GMP11	4/22/02	4.0 to 5.5	63.0	NR	0.0	30.07	-0.5	67.64	GMP11SG001	--
GMP12	4/22/02	5.0 to 13.0	61.5	NR	3.6	30.03	-0.5	69.80	GMP12SG001	GMP12SG002
IR01MW16A	4/22/02	10.3 to 25.3	53.3	NR	0.0	29.92	-0.1	82.40	IR01MW16ASG001	--
IR01MW18A	4/22/02	7.0 to 25.0	42.3	NR	0.0	29.95	-0.8	86.00	IR01MW18ASG001	--
IR01MW366A	4/22/02	2.7 to 12.7	15.6	NR	0.0	29.92	-0.1	84.20	IR01MW366ASG001	--
IR01MWI-5	4/22/02	5.0 to 20.0	64.6	NR	0.0	29.27	-0.7	85.10	IR01MWI-5SG001	--
GMP01	6/5/02	6.0 to 13.5	56.4	NR	0.0	29.86	-0.6	79.50	--	--
GMP02	6/5/02	6.0 to 13.5	64.0	NR	0.0	29.86	-0.4	79.30	--	--
GMP03	6/5/02	6.0 to 13.5	67.7	NR	0.0	29.86	-0.4	79.50	--	--
GMP04	6/5/02	6.0 to 13.5	56.6	NR	0.0	29.86	-0.6	77.40	--	--
GMP05	6/5/02	6.0 to 12.5	49.2	NR	0.5	29.86	-0.6	85.00	--	--
GMP06	6/5/02	6.0 to 13.5	67.9	NR	0.0	29.86	0.0	73.70	--	--
GMP07	6/5/02	6.0 to 13.5	57.3	NR	0.0	29.86	-0.4	78.10	--	--
GMP08	6/5/02	6.0 to 12.5	78.2	NR	0.0	29.86	-0.4	79.30	--	--
GMP09	6/5/02	6.0 to 9.5	0.0	NR	0.2	29.86	-0.4	79.50	--	--
GMP10	6/5/02	4.0 to 6.5	0.1	NR	0.6	29.86	-0.6	78.50	--	--
GMP11	6/5/02	4.0 to 5.5	61.2	NR	0.0	29.86	-0.4	80.70	--	--
GMP12	6/5/02	5.0 to 13.0	64.8	NR	0.0	29.86	-0.6	80.00	--	--
GMP13	6/5/02	6.0 to 12.0	0.0	NR	1.2	29.82	-0.6	91.50	GMP13SG001	--
GMP14	6/5/02	6.0 to 10.0	0.0	NR	1.0	29.82	-0.6	90.00	GMP14SG001	--
GMP15	6/5/02	6.0 to 12.0	0.0	NR	1.1	29.82	-0.6	88.60	GMP15SG001	--
GMP16	6/5/02	5.0 to 10.0	0.0	NR	0.9	29.88	-0.3	89.80	GMP16SG001	GMP16SG002
GMP17	6/5/02	6.0 to 10.0	0.0	NR	0.9	29.88	-0.3	89.80	GMP17SG001	--
GMP18	6/5/02	6.0 to 12.0	0.0	NR	0.3	29.88	-0.3	89.20	GMP18SG001	--
GMP19	6/5/02	4.5 to 5.5	0.0	NR	1.1	29.95	0.0	82.50	GMP19SG001	--

TABLE 8: WEEKLY GAS MONITORING FIELD SCREENING DATA (Continued)

Parcel E Nonstandard Data Gaps Investigation, Landfill Gas Characterization, Hunters Point Shipyard, San Francisco, California

Location Identification	Date	Screen Interval (feet bgs)	Methane (percent by volume in air)	VOCs Background	VOCs Above Background (ppm)	Barometric Pressure (inches mercury)	Pressure in Gas Probe (inches Mercury)	Probe Gas Temperature (ºF)	Sample Number	Duplicate Sample Number
IR01MW366A	6/5/02	2.7 to 12.7	15.1	NR	0.0	29.77	NR	29.77	GMP19SG001	--
GMP01	6/11/02	6.0 to 13.5	43.5	NR	0.0	29.81	-0.9	70.00	--	--
GMP02	6/11/02	6.0 to 13.5	63.4	NR	0.6	29.81	-0.9	72.10	--	--
GMP03	6/11/02	6.0 to 13.5	66.3	NR	0.0	29.81	-0.9	72.00	--	--
GMP04	6/11/02	6.0 to 13.5	52.9	NR	0.0	29.81	-0.9	69.40	--	--
GMP05	6/11/02	6.0 to 12.5	52.5	NR	0.0	29.81	-0.9	72.00	--	--
GMP06	6/11/02	6.0 to 13.5	65.6	NR	0.0	29.81	-0.9	74.30	--	--
GMP07	6/11/02	6.0 to 13.5	55.6	NR	0.0	29.81	-0.9	74.30	--	--
GMP08	6/11/02	6.0 to 12.5	72.8	NR	0.0	29.81	-0.9	73.40	--	--
GMP09	6/11/02	6.0 to 9.5	0.0	NR	0.0	29.81	-0.9	76.20	--	--
GMP10	6/11/02	4.0 to 6.5	0.0	NR	0.0	29.80	-0.6	78.00	--	--
GMP11	6/11/02	4.0 to 5.5	56.2	NR	0.0	29.80	-0.6	79.00	--	--
GMP12	6/11/02	5.0 to 13.0	61.4	NR	0.0	29.81	-0.9	71.80	--	--
GMP13	6/11/02	6.0 to 12.0	0.0	NR	1.5	29.80	-0.6	77.40	--	--
GMP14	6/11/02	6.0 to 10.0	0.0	NR	0.5	29.80	-0.6	80.00	--	--
GMP15	6/11/02	6.0 to 12.0	0.0	NR	0.3	29.80	-0.6	74.10	--	--
GMP16	6/11/02	5.0 to 10.0	0.0	NR	0.5	29.80	-0.6	75.50	--	--
GMP17	6/11/02	6.0 to 10.0	0.0	NR	0.2	29.80	-0.6	72.90	--	--
GMP18	6/11/02	6.0 to 12.0	0.0	NR	0.1	29.80	-0.6	71.60	--	--
GMP19	6/11/02	4.5 to 5.5	0.0	NR	0.3	29.80	-0.6	71.80	--	--
GMP20	6/11/02	3.5 to 4.5	0.4	NR	0.0	29.81	-0.9	76.70	--	--
GMP21	6/11/02	3.5 to 4.0	0.3	NR	0.3	29.80	-0.6	76.70	--	--
GMP01	6/19/02 to	6.0 to 13.5	51.7	NR	9.6	29.83	-0.6	71.00	--	--
GMP02	6/19/02 to	6.0 to 13.5	64.4	NR	3.8	29.74	-1.0	69.60	--	--
GMP03	6/19/02 to	6.0 to 13.5	67.5	NR	2.7	29.74	-1.0	70.10	--	--
GMP04	6/19/02 to	6.0 to 13.5	49.4	NR	2.3	29.74	-1.0	68.00	--	--
GMP05	6/19/02 to	6.0 to 12.5	48.6	NR	0.5	29.74	-1.0	67.80	--	--
GMP06	6/19/02 to	6.0 to 13.5	62.8	NR	0.0	29.74	-1.0	68.53	--	--
GMP07	6/19/02 to	6.0 to 13.5	56.5	NR	0.0	29.74	-1.0	66.90	--	--
GMP08	6/19/02 to	6.0 to 12.5	74.1	NR	10.4	29.74	-1.0	68.10	--	--
GMP09	6/19/02 to	6.0 to 9.5	0.1	NR	0.0	29.74	-1.0	67.60	--	--
GMP10	6/19/02 to	4.0 to 6.5	0.0	NR	0.0	29.83	-0.6	69.90	--	--
GMP11	6/19/02 to	4.0 to 5.5	60.6	NR	0.0	29.83	-0.6	71.60	--	--
GMP12	6/19/02 to	5.0 to 13.0	60.2	NR	5.6	29.83	-0.6	73.20	--	--
GMP13	6/19/02 to	6.0 to 12.0	0.0	NR	0.6	29.83	-0.4	59.10	--	--

TABLE 8: WEEKLY GAS MONITORING FIELD SCREENING DATA (Continued)

Parcel E Nonstandard Data Gaps Investigation, Landfill Gas Characterization, Hunters Point Shipyard, San Francisco, California

Location Identification	Date	Screen Interval (feet bgs)	Methane (percent by volume in air)	VOCs Background	VOCs Above Background (ppm)	Barometric Pressure (inches mercury)	Pressure in Gas Probe (inches Mercury)	Probe Gas Temperature (ºF)	Sample Number	Duplicate Sample Number
GMP14	6/19/02 to	6.0 to 10.0	0.0	NR	0.2	29.85	-0.4	60.40	--	--
GMP15	6/19/02 to	6.0 to 12.0	0.0	NR	0.1	29.85	-0.4	61.10	--	--
GMP16	6/19/02 to	5.0 to 10.0	0.0	NR	0.1	29.85	-0.4	61.70	--	--
GMP17	6/19/02 to	6.0 to 10.0	0.0	NR	0.2	29.85	-0.4	59.70	--	--
GMP18	6/19/02 to	6.0 to 12.0	0.0	NR	0.1	29.85	-0.4	58.80	--	--
GMP19	6/19/02 to	4.5 to 5.5	0.0	NR	0.2	29.85	-0.4	60.00	--	--
GMP20	6/19/02 to	3.5 to 4.5	0.0	NR	0.0	29.83	-0.6	69.40	--	--
GMP21	6/19/02 to	3.5 to 4.0	0.0	NR	0.0	29.83	-0.6	68.70	--	--
IR01MW18A	6/19/02 to	10.3 to 25.3	53	NR	0.0	NA	NA	65.80	--	--
IR01MW16A	6/19/02 to	7.0 to 25.0	4.2	NR	0.0	NA	NA	59.50	--	--
IR01MW366A	6/19/02 to	2.7 to 12.7	16.6	NR	0.0	NA	NA	67.80	--	--
IR01MWI-5	6/19/02 to	5.0 to 20.0	65.1	NR	0.0	NA	NA	64.00	--	--
GMP01	6/26/02 to	6.0 to 13.5	47.0	NR	3.8	29.93	-0.5	75.00	--	--
GMP02	6/26/02 to	6.0 to 13.5	65.7	NR	1.1	29.93	-0.8	76.90	--	--
GMP03	6/26/02 to	6.0 to 13.5	67.6	NR	0.8	29.93	-0.8	76.20	--	--
GMP04	6/26/02 to	6.0 to 13.5	47.5	NR	0.5	29.93	-0.8	75.20	--	--
GMP05	6/26/02 to	6.0 to 12.5	45.9	NR	0.0	29.93	-0.8	77.50	--	--
GMP06	6/26/02 to	6.0 to 13.5	61.6	NR	0.0	29.82	-1	85.10	--	--
GMP07	6/26/02 to	6.0 to 13.5	47.0	NR	0.0	29.82	-1.3	79.50	--	--
GMP08	6/26/02 to	6.0 to 12.5	76.0	NR	2.0	29.82	-1.3	82.50	--	--
GMP09	6/26/02 to	6.0 to 9.5	0.1	NR	0.0	29.82	-1.3	78.60	--	--
GMP10	6/26/02 to	4.0 to 6.5	0.0	NR	0.0	29.83	-0.8	74.50	--	--
GMP11	6/26/02 to	4.0 to 5.5	51.9	NR	0.2	29.93	-0.6	72.10	--	--
GMP12	6/26/02 to	5.0 to 13.0	61.1	NR	2.0	29.93	-0.5	76.40	--	--
GMP13	6/26/02 to	6.0 to 12.0	0.0	NR	0.2	29.94	-0.6	66.00	--	--
GMP14	6/26/02 to	6.0 to 10.0	0.0	NR	0.0	29.93	-0.5	68.30	--	--
GMP15	6/26/02 to	6.0 to 12.0	0.0	NR	0.0	29.93	-0.5	71.60	--	--
GMP16	6/26/02 to	5.0 to 10.0	0.0	NR	0.0	29.93	-0.5	69.80	--	--
GMP17	6/26/02 to	6.0 to 10.0	0.0	NR	0.0	29.93	-0.5	69.80	--	--
GMP18	6/26/02 to	6.0 to 12.0	0.0	NR	0.0	29.93	-0.5	67.10	--	--
GMP19	6/26/02 to	4.5 to 5.5	0.0	NR	0.0	29.93	-0.5	71.20	--	--
GMP20	6/26/02 to	3.5 to 4.5	0.0	NR	0.0	29.93	-0.8	70.80	--	--
GMP21	6/26/02 to	3.5 to 4.0	0.0	NR	0.0	29.93	-0.8	76.70	--	--
IR01MW18A	6/26/02 to	10.3 to 25.3	54.9	NR	0.0	29.82	-1.3	73.70	--	--
IR01MW16A	6/26/02 to	7.0 to 25.0	0.0	NR	0.2	29.93	-0.5	76.20	--	--
IR01MW366A	6/26/02 to	2.7 to 12.7	5.1	NR	0.0	29.82	-1.3	74.80	--	--

TABLE 8: WEEKLY GAS MONITORING FIELD SCREENING DATA (Continued)

Parcel E Nonstandard Data Gaps Investigation, Landfill Gas Characterization, Hunters Point Shipyard, San Francisco, California

Location Identification	Date	Screen Interval (feet bgs)	Methane (percent by volume in air)	VOCs Background	VOCs Above Background (ppm)	Barometric Pressure (inches mercury)	Pressure in Gas Probe (inches Mercury)	Probe Gas Temperature (ºF)	Sample Number	Duplicate Sample Number
IR01MWI-5	6/26/02 to	5.0 to 20.0	70.2	NR	0.0	29.82	-1.3	70.00	--	--
GMP01	7/3/02 to	6.0 to 13.5	41.9	NR	3.8	29.94	-0.5	61.30	--	--
GMP02	7/3/02 to	6.0 to 13.5	66.3	NR	0.0	29.94	-0.5	62.20	--	--
GMP03	7/3/02 to	6.0 to 13.5	69.4	NR	1.1	29.94	-0.5	61.50	--	--
GMP04	7/3/02 to	6.0 to 13.5	47.6	NR	0.7	29.94	-0.5	61.70	--	--
GMP05	7/3/02 to	6.0 to 12.5	51.5	NR	0.0	29.94	-0.5	63.10	--	--
GMP06	7/3/02 to	6.0 to 13.5	60.0	NR	0.0	29.94	-0.5	61.70	--	--
GMP07	7/3/02 to	6.0 to 13.5	44.9	NR	0.0	29.94	-0.5	61.10	--	--
GMP08	7/3/02 to	6.0 to 12.5	75.0	NR	4.7	29.91	-0.8	63.60	--	--
GMP09	7/3/02 to	6.0 to 9.5	0.1	NR	0.0	29.91	-0.7	64.70	--	--
GMP10	7/3/02 to	4.0 to 6.5	0.0	NR	0.2	29.99	-0.2	61.70	--	--
GMP11	7/3/02 to	4.0 to 5.5	56.0	NR	0.0	29.90	-0.2	66.50	--	--
GMP12	7/3/02 to	5.0 to 13.0	60.0	NR	0.0	29.94	-0.5	68.00	--	--
GMP13	7/3/02 to	6.0 to 12.0	0.0	NR	0.0	29.91	-0.7	73.90	--	--
GMP14	7/3/02 to	6.0 to 10.0	0.0	NR	0.0	29.91	-0.7	77.30	--	--
GMP15	7/3/02 to	6.0 to 12.0	0.0	NR	0.7	29.91	-0.7	73.70	--	--
GMP16	7/3/02 to	5.0 to 10.0	0.0	NR	0.9	29.91	-0.7	78.60	--	--
GMP17	7/3/02 to	6.0 to 10.0	0.0	NR	0.9	29.91	-0.7	74.60	--	--
GMP18	7/3/02 to	6.0 to 12.0	0.0	NR	0.9	29.91	-0.7	73.90	--	--
GMP19	7/3/02 to	4.5 to 5.5	0.0	NR	0.9	29.91	-0.7	71.90	--	--
GMP20	7/3/02 to	3.5 to 4.5	0.0	NR	0.0	29.99	-0.5	64.70	--	--
GMP21	7/3/02 to	3.5 to 4.0	0.0	NR	0.0	29.99	-0.2	62.40	--	--
IR01MW18A	7/3/02 to	10.3 to 25.3	55.3	NR	0.0	29.95	-0.4	62.70	--	--
IR01MW16A	7/3/02 to	7.0 to 25.0	23.4	NR	0.0	NA	NA	61.10	--	--
IR01MW366A	7/3/02 to	2.7 to 12.7	1.2	NR	0.0	NA	NA	62.00	--	--
IR01MWI-5	7/3/02 to	5.0 to 20.0	72.4	NR	0.0	NA	NA	65.10	--	--
GMP01	7/10/02	6.0 to 13.5	50.1	NR	5.4	29.85	-0.7	73.50	--	--
GMP02	7/10/02	6.0 to 13.5	67.0	NR	3.6	29.85	-0.7	77.00	--	--
GMP03	7/10/02	6.0 to 13.5	68.2	NR	3.3	29.85	-0.7	74.10	--	--
GMP04	7/10/02	6.0 to 13.5	46.4	NR	3.3	29.85	-0.7	74.40	--	--
GMP05	7/10/02	6.0 to 12.5	50.2	NR	1.9	29.85	-0.7	73.90	--	--
GMP06	7/10/02	6.0 to 13.5	56.3	NR	1.2	29.85	-0.7	75.50	--	--
GMP07	7/10/02	6.0 to 13.5	45.7	NR	0.5	29.83	-0.8	73.40	--	--
GMP08	7/10/02	6.0 to 12.5	74.2	NR	6.8	29.83	-0.8	72.10	--	--
GMP09	7/10/02	6.0 to 9.5	0.0	NR	4.0	29.83	-0.8	74.40	--	--

TABLE 8: WEEKLY GAS MONITORING FIELD SCREENING DATA (Continued)

Parcel E Nonstandard Data Gaps Investigation, Landfill Gas Characterization, Hunters Point Shipyard, San Francisco, California

Location Identification	Date	Screen Interval (feet bgs)	Methane (percent by volume in air)	VOCs Background	VOCs Above Background (ppm)	Barometric Pressure (inches mercury)	Pressure in Gas Probe (inches Mercury)	Probe Gas Temperature (ºF)	Sample Number	Duplicate Sample Number
GMP10	7/10/02	4.0 to 6.5	0.2	NR	1.9	29.85	-0.7	78.00	--	--
GMP11	7/10/02	4.0 to 5.5	58.7	NR	0.1	29.85	-0.7	76.40	--	--
GMP12	7/10/02	5.0 to 13.0	60.8	8.1	1.5	29.85	-0.7	75.70	--	--
GMP13	7/10/02	6.0 to 12.0	0.0	NR	2.9	29.83	-0.8	77.90	--	--
GMP14	7/10/02	6.0 to 10.0	0.0	NR	2.9	29.83	-0.8	78.40	--	--
GMP15	7/10/02	6.0 to 12.0	0.0	NR	3.6	29.83	-0.8	76.60	--	--
GMP16	7/10/02	5.0 to 10.0	0.0	NR	2.9	29.83	-0.8	80.20	--	--
GMP17	7/10/02	6.0 to 10.0	0.0	NR	2.9	29.83	-0.8	83.00	--	--
GMP18	7/10/02	6.0 to 12.0	0.0	NR	2.9	29.83	-0.8	80.00	--	--
GMP19	7/10/02	4.5 to 5.5	0.0	NR	2.9	29.83	-0.8	82.20	--	--
GMP20	7/10/02	3.5 to 4.5	0.0	NR	1.5	29.87	-0.6	68.10	--	--
GMP21	7/10/02	3.5 to 4.0	0.0	1.9	1.9	29.85	-0.7	71.70	--	--
IR01MW18A	7/10/02	10.3 to 25.3	56.9	NR	0.8	NA	NA	77.10	--	--
IR01MW16A	7/10/02	7.0 to 25.0	49.0	NR	0.8	NA	NA	75.00	--	--
IR01MW366A	7/10/02	2.7 to 12.7	15.3	NR	0.8	NA	NA	80.00	--	--
IR01MWI-5	7/10/02	5.0 to 20.0	70.0	NR	0.5	NA	NA	78.40	--	--
GMP01	7/18/02 to	6.0 to 13.5	47.8	NR	2.1	29.98	-0.7	72.30	--	--
GMP02	7/18/02 to	6.0 to 13.5	65.2	NR	0.0	29.93	-0.8	66.00	--	--
GMP03	7/18/02 to	6.0 to 13.5	65.7	NR	0.5	29.95	-0.8	72.30	--	--
GMP04	7/18/02 to	6.0 to 13.5	44.6	NR	0.6	29.95	-0.8	70.10	--	--
GMP05	7/18/02 to	6.0 to 12.5	46.5	NR	0.5	29.95	-0.8	70.30	--	--
GMP06	7/18/02 to	6.0 to 13.5	52.6	NR	0.0	29.95	-0.8	69.30	--	--
GMP07	7/18/02 to	6.0 to 13.5	37.5	NR	0.3	29.95	-0.8	70.30	--	--
GMP08	7/18/02 to	6.0 to 12.5	74.4	NR	1.4	29.95	-0.8	71.00	--	--
GMP09	7/18/02 to	6.0 to 9.5	0.3	NR	1.1	29.95	-0.8	68.90	--	--
GMP10	7/18/02 to	4.0 to 6.5	0.0	NR	0.0	29.98	-0.7	70.70	--	--
GMP11	7/18/02 to	4.0 to 5.5	57.3	NR	0.0	29.98	-0.7	73.60	--	--
GMP12	7/18/02 to	5.0 to 13.0	59.9	NR	0.4	29.98	-0.7	73.40	--	--
GMP13	7/18/02 to	6.0 to 12.0	0.0	NR	0.0	30.02	-0.6	63.70	--	--
GMP14	7/18/02 to	6.0 to 10.0	0.0	NR	1.5	30.02	-0.6	66.40	--	--
GMP15	7/18/02 to	6.0 to 12.0	0.0	NR	0.0	30.00	-0.6	68.20	--	--
GMP16	7/18/02 to	5.0 to 10.0	0.0	NR	0.0	30.00	-0.6	72.50	--	--
GMP17	7/18/02 to	6.0 to 10.0	0.0	NR	0.0	30.00	-0.6	68.90	--	--
GMP18	7/18/02 to	6.0 to 12.0	0.0	NR	0.1	30.00	-0.6	64.90	--	--
GMP19	7/18/02 to	4.5 to 5.5	0.0	NR	0.0	30.00	-0.6	63.10	--	--

TABLE 8: WEEKLY GAS MONITORING FIELD SCREENING DATA (Continued)

Parcel E Nonstandard Data Gaps Investigation, Landfill Gas Characterization, Hunters Point Shipyard, San Francisco, California

Location Identification	Date	Screen Interval (feet bgs)	Methane (percent by volume in air)	VOCs Background	VOCs Above Background (ppm)	Barometric Pressure (inches mercury)	Pressure in Gas Probe (inches Mercury)	Probe Gas Temperature (ºF)	Sample Number	Duplicate Sample Number
GMP20	7/18/02 to	3.5 to 4.5	0.0	NR	0.1	29.98	-0.7	70.50	--	--
GMP21	7/18/02 to	3.5 to 4.0	0.0	NR	1.1	29.98	-0.7	67.50	--	--
IR01MW18A	7/18/02 to	10.3 to 25.3	56.6	NR	1.3	NA	NA	68.00	--	--
IR01MW16A	7/18/02 to	7.0 to 25.0	40.8	NR	0.0	NA	NA	71.90	--	--
IR01MW366A	7/18/02 to	2.7 to 12.7	7.2	NR	0.0	NA	NA	73.80	--	--
IR01MWI-5	7/18/02 to	5.0 to 20.0	70.7	NR	0.7	NA	NA	69.40	--	--
GMP01	7/24/02	6.0 to 13.5	42.3	NR	8.7	30.07	-0.7	71.80	--	--
GMP02	7/24/02	6.0 to 13.5	65.8	NR	4.2	30.06	-0.7	71.40	--	--
GMP03	7/24/02	6.0 to 13.5	66.5	NR	0.0	30.06	-0.9	72.30	--	--
GMP04	7/24/02	6.0 to 13.5	45.9	NR	0.0	30.06	-0.9	72.70	--	--
GMP05	7/24/02	6.0 to 12.5	43.6	NR	0.0	30.06	-0.9	73.00	--	--
GMP06	7/24/02	6.0 to 13.5	50.9	NR	0.0	30.06	-0.9	72.00	--	--
GMP07	7/24/02	6.0 to 13.5	34.1	NR	0.0	30.06	-0.9	70.90	--	--
GMP08	7/24/02	6.0 to 12.5	74.5	NR	1.1	30.06	-0.9	72.50	--	--
GMP09	7/24/02	6.0 to 9.5	0.0	0.7	1.6	30.06	-0.9	71.20	--	--
GMP10	7/24/02	4.0 to 6.5	0.0	NR	3.8	30.06	-0.7	70.30	--	--
GMP11	7/24/02	4.0 to 5.5	57.8	NR	12.9	30.06	-0.7	74.30	--	--
GMP12	7/24/02	5.0 to 13.0	60.6	NR	18.7	30.06	-0.7	75.60	--	--
GMP13	7/24/02	6.0 to 12.0	0.0	NR	5.4	30.06	-0.6	76.00	--	--
GMP14	7/24/02	6.0 to 10.0	0.0	NR	2.4	30.06	-0.6	71.40	--	--
GMP15	7/24/02	6.0 to 12.0	0.0	NR	0.6	30.06	-0.6	69.40	--	--
GMP16	7/24/02	5.0 to 10.0	0.0	NR	0.4	30.06	-0.6	68.50	--	--
GMP17	7/24/02	6.0 to 10.0	0.0	NR	0.4	30.06	-0.6	70.70	--	--
GMP18	7/24/02	6.0 to 12.0	0.0	NR	0.4	30.06	-0.6	70.50	--	--
GMP19	7/24/02	4.5 to 5.5	0.0	NR	0.4	NA	NA	70.30	--	--
GMP20	7/24/02	3.5 to 4.5	0.0	NR	6.7	NA	NA	70.20	--	--
GMP21	7/24/02	3.5 to 4.0	0.0	NR	5.6	30.06	-0.7	72.90	--	--
IR01MW18A	7/24/02	10.3 to 25.3	52.7	NR	38.0	NA	NA	69.40	--	--
IR01MW16A	7/24/02	7.0 to 25.0	37.0	NR	30.8	NA	NA	69.10	--	--
IR01MW366A	7/24/02	2.7 to 12.7	3.1	NR	0.0	NA	NA	68.90	--	--
IR01MWI-5	7/24/02	5.0 to 20.0	71.0	NR	0.0	NA	NA	68.90	--	--
GMP01	7/31/02 to	6.0 to 13.5	50.0	1.6	3.7	29.97	-0.7	70.80	GMP01SG004	--
GMP02	7/31/02 to	6.0 to 13.5	66.2	3.1	0.0	29.94	-0.6	74.10	GMP02SG003	--
GMP03	7/31/02 to	6.0 to 13.5	68.5	3.0	0.0	29.94	-0.6	73.20	GMP03SG004	--
GMP04	7/31/02 to	6.0 to 13.5	48.9	3.9	0.0	29.94	-0.7	73.90	GMP04SG003	--

TABLE 8: WEEKLY GAS MONITORING FIELD SCREENING DATA (Continued)

Parcel E Nonstandard Data Gaps Investigation, Landfill Gas Characterization, Hunters Point Shipyard, San Francisco, California

Location Identification	Date	Screen Interval (feet bgs)	Methane (percent by volume in air)	VOCs Background	VOCs Above Background (ppm)	Barometric Pressure (inches mercury)	Pressure in Gas Probe (inches Mercury)	Probe Gas Temperature (ºF)	Sample Number	Duplicate Sample Number
GMP05	7/31/02 to	6.0 to 12.5	42.9	3.1	0.0	29.97	-0.7	74.10	GMP05SG003	--
GMP06	7/31/02 to	6.0 to 13.5	50.8	4.8	0.0	29.97	-0.7	72.10	GMP06SG003	--
GMP07	7/31/02 to	6.0 to 13.5	36.1	5.8	0.0	29.98	-0.4	69.90	GMP07SG004	--
GMP08	7/31/02 to	6.0 to 12.5	74.5	0.9	5.8	29.97	-0.7	71.40	GMP08SG003	--
GMP09	7/31/02 to	6.0 to 9.5	0.0	1.0	1.1	29.99	-0.7	75.90	--	--
GMP10	7/31/02 to	4.0 to 6.5	0.0	1.3	1.6	29.94	-0.8	73.50	--	--
GMP11	7/31/02 to	4.0 to 5.5	59.1	1.7	0.3	29.94	-0.6	74.40	GMP11SG003	GMP11SG004
GMP12	7/31/02 to	5.0 to 13.0	60.6	1.9	2.5	29.96	-0.7	80.90	GMP12SG004	--
GMP13	7/31/02 to	6.0 to 12.0	0.0	0.5	0.9	30.00	-0.6	66.50	--	--
GMP14	7/31/02 to	6.0 to 10.0	0.0	0.8	1.1	30.00	-0.6	68.70	--	--
GMP15	7/31/02 to	6.0 to 12.0	0.0	0.9	1.0	30.00	-0.6	69.20	--	--
GMP16	7/31/02 to	5.0 to 10.0	0.0	0.9	1.2	29.97	-0.6	71.00	--	--
GMP17	7/31/02 to	6.0 to 10.0	0.0	0.1	1.6	29.95	-0.8	78.60	--	--
GMP18	7/31/02 to	6.0 to 12.0	0.0	0.1	2.1	29.95	-0.8	75.20	--	--
GMP19	7/31/02 to	4.5 to 5.5	0.0	0.6	2.8	29.95	-0.8	78.40	--	--
GMP20	7/31/02 to	3.5 to 4.5	0.0	0.9	2.7	29.94	-0.8	73.90	--	--
GMP21	7/31/02 to	3.5 to 4.0	0.0	1.1	2.4	29.94	0.2	75.00	--	--
IR01MW18A	7/31/02 to	10.3 to 25.3	58.9	0.0	0.0	NA	NA	69.60	IR01MW18ASG002	--
IR01MW16A	7/31/02 to	7.0 to 25.0	53.0	0.2	0.0	NA	NA	75.20	IR01MW16ASG003	--
IR01MW366A	7/31/02 to	2.7 to 12.7	19.2	0.0	0.0	NA	NA	71.60	IR01MW366ASG003	IR01MW366ASG004
IR01MWI-5	7/31/02 to	5.0 to 20.0	71.0	0.3	0.0	NA	NA	71.20	IR01MWI-5SG002	--
GMP01	8/7/02	6.0 to 13.5	51.1	0.0	0.4	29.96	-0.9	80.40	--	--
GMP02	8/7/02	6.0 to 13.5	65.9	0.0	1.6	29.96	-0.9	83.00	--	--
GMP03	8/7/02	6.0 to 13.5	67.7	0.0	1.1	29.96	-0.9	83.30	--	--
GMP04	8/7/02	6.0 to 13.5	46.8	0.0	0.9	29.96	-0.9	81.40	--	--
GMP05	8/7/02	6.0 to 12.5	41.3	0.0	0.0	29.96	-0.9	80.30	--	--
GMP06	8/7/02	6.0 to 13.5	49.0	0.0	0.0	29.94	-0.8	82.20	--	--
GMP07	8/7/02	6.0 to 13.5	33.9	0.0	0.0	29.94	-0.4	82.20	--	--
GMP08	8/7/02	6.0 to 12.5	74.0	0.0	0.0	29.94	-0.4	82.30	--	--
GMP09	8/7/02	6.0 to 9.5	0.1	0.4	0.4	29.94	-0.4	81.50	--	--
GMP10	8/7/02	4.0 to 6.5	0.0	0.0	0.0	29.96	-0.9	78.50	--	--
GMP11	8/7/02	4.0 to 5.5	56.1	0.0	1.4	29.96	-0.9	80.40	--	--
GMP12	8/7/02	5.0 to 13.0	59.8	0.0	2.3	29.96	-0.9	84.30	--	--
GMP13	8/7/02	6.0 to 12.0	0.0	0.0	0.0	30.01	-0.6	66.70	--	--
GMP14	8/7/02	6.0 to 10.0	0.0	0.0	0.0	30.01	-0.5	75.20	--	--

TABLE 8: WEEKLY GAS MONITORING FIELD SCREENING DATA (Continued)

Parcel E Nonstandard Data Gaps Investigation, Landfill Gas Characterization, Hunters Point Shipyard, San Francisco, California

Location Identification	Date	Screen Interval (feet bgs)	Methane (percent by volume in air)	VOCs Background	VOCs Above Background (ppm)	Barometric Pressure (inches mercury)	Pressure in Gas Probe (inches Mercury)	Probe Gas Temperature (ºF)	Sample Number	Duplicate Sample Number
GMP15	8/7/02	6.0 to 12.0	0.0	0.0	0.0	30.01	-0.5	69.90	--	--
GMP16	8/7/02	5.0 to 10.0	0.0	0.0	0.0	30.01	-0.5	75.20	--	--
GMP17	8/7/02	6.0 to 10.0	0.0	0.0	0.0	30.01	-0.5	72.10	--	--
GMP18	8/7/02	6.0 to 12.0	0.0	0.0	0.0	30.01	-0.5	70.30	--	--
GMP19	8/7/02	4.5 to 5.5	0.0	0.0	0.0	30.01	-0.5	69.60	--	--
GMP20	8/7/02	3.5 to 4.5	0.1	0.0	0.0	29.96	-0.9	76.30	--	--
GMP21	8/7/02	3.5 to 4.0	0.0	0.0	0.0	29.96	-0.9	78.80	--	--
IR01MW18A	8/7/02	10.3 to 25.3	56.2	0.0	11.2	NA	NA	75.50	--	--
IR01MW16A	8/7/02	7.0 to 25.0	33.5	0.0	0.5	NA	NA	76.00	--	--
IR01MW366A	8/7/02	2.7 to 12.7	1.0	0.0	0.0	NA	NA	73.30	--	--
IR01MWI-5	8/7/02	5.0 to 20.0	70.3	0.0	2.1	NA	NA	72.10	--	--
GMP01	8/14/02	6.0 to 13.5	50.4	0.0	73.5	29.88	-0.3	69.00	--	--
GMP02	8/14/02	6.0 to 13.5	68.5	0.0	67.6	29.88	-0.3	68.70	--	--
GMP03	8/14/02	6.0 to 13.5	71.0	0.0	39.2	29.88	-0.3	68.90	--	--
GMP04	8/14/02	6.0 to 13.5	53.0	0.1	28.5	29.88	-0.3	67.10	--	--
GMP05	8/14/02	6.0 to 12.5	49.5	2.2	30.1	29.88	-0.3	67.20	--	--
GMP06	8/14/02	6.0 to 13.5	51.8	3.3	21.0	29.88	-0.3	66.50	--	--
GMP07	8/14/02	6.0 to 13.5	40.4	1.7	21.0	29.88	-0.3	65.60	--	--
GMP08	8/14/02	6.0 to 12.5	77.9	0.0	21.0	29.88	-0.3	67.40	--	--
GMP09	8/14/02	6.0 to 9.5	0.0	0.0	21.5	29.88	-0.3	67.20	--	--
GMP10	8/14/02	4.0 to 6.5	0.3	0.0	0.0	29.88	-0.3	69.20	--	--
GMP11	8/14/02	4.0 to 5.5	59.6	0.0	0.0	29.88	-0.3	70.30	--	--
GMP12	8/14/02	5.0 to 13.0	62.9	0.0	0.0	29.88	-0.3	71.90	--	--
GMP13	8/14/02	6.0 to 12.0	0.0	1.5	1.0	29.88	-0.6	69.20	--	--
GMP14	8/14/02	6.0 to 10.0	0.0	0.2	0.6	29.88	-0.3	69.20	--	--
GMP15	8/14/02	6.0 to 12.0	0.0	0.2	0.2	29.88	-0.3	69.20	--	--
GMP16	8/14/02	5.0 to 10.0	0.0	0.6	0.6	29.88	-0.3	70.30	--	--
GMP17	8/14/02	6.0 to 10.0	0.0	0.2	0.2	29.88	-0.3	76.40	--	--
GMP18	8/14/02	6.0 to 12.0	0.0	1.5	160.0	29.88	-0.3	68.30	--	--
GMP19	8/14/02	4.5 to 5.5	0.0	3.2	750.0	29.88	-0.3	71.40	--	--
GMP20	8/14/02	3.5 to 4.5	0.0	0.0	0.0	29.88	-0.3	70.30	--	--
GMP21	8/14/02	3.5 to 4.0	0.0	0.0	22.6	29.88	-0.3	70.10	--	--
IR01MW18A	8/14/02	10.3 to 25.3	59.6	NR	129.3	NA	NA	69.20	--	--
IR01MW16A	8/14/02	7.0 to 25.0	52.2	0.0	270.0	NA	NA	74.80	--	--
IR01MW366A	8/14/02	2.7 to 12.7	NR	0.0	NR	NA	NA	NR	--	--

TABLE 8: WEEKLY GAS MONITORING FIELD SCREENING DATA (Continued)

Parcel E Nonstandard Data Gaps Investigation, Landfill Gas Characterization, Hunters Point Shipyard, San Francisco, California

Location Identification	Date	Screen Interval (feet bgs)	Methane (percent by volume in air)	VOCs Background	VOCs Above Background (ppm)	Barometric Pressure (inches mercury)	Pressure in Gas Probe (inches Mercury)	Probe Gas Temperature (ºF)	Sample Number	Duplicate Sample Number
IR01MWI-5	8/14/02	5.0 to 20.0	NR	NR	NR	NA	NA	NR	--	--
GMP01	8/20/02	6.0 to 13.5	58.8	5.1	0.0	29.91	-0.6	69.00	--	--
GMP02	8/20/02	6.0 to 13.5	71.2	3.0	0.0	29.91	-0.6	67.10	--	--
GMP03	8/20/02	6.0 to 13.5	72.6	2.0	0.0	29.91	-0.6	70.10	--	--
GMP04	8/20/02	6.0 to 13.5	51.4	5.0	0.0	29.91	-0.6	66.20	--	--
GMP05	8/20/02	6.0 to 12.5	50.0	3.2	0.0	29.91	-0.6	67.60	--	--
GMP06	8/20/02	6.0 to 13.5	51.4	3.8	0.0	29.91	-0.6	67.00	--	--
GMP07	8/20/02	6.0 to 13.5	37.0	7.0	0.0	29.91	-0.6	68.10	--	--
GMP08	8/20/02	6.0 to 12.5	78.8	0.0	2.8	29.91	-0.6	70.10	--	--
GMP09	8/20/02	6.0 to 9.5	0.0	0.0	0.0	29.91	-0.6	66.70	--	--
GMP10	8/20/02	4.0 to 6.5	0.2	0.9	1.0	29.91	-0.6	66.70	--	--
GMP11	8/20/02	4.0 to 5.5	60.3	1.7	0.0	29.91	-0.6	70.70	--	--
GMP12	8/20/02	5.0 to 13.0	63.6	3.5	0.0	29.91	-0.6	71.40	--	--
GMP13	8/20/02	6.0 to 12.0	0.0	0.0	0.0	29.90	-0.5	65.60	--	--
GMP14	8/20/02	6.0 to 10.0	0.0	0.0	0.0	29.90	-0.5	65.10	--	--
GMP15	8/20/02	6.0 to 12.0	0.0	0.0	0.0	29.91	-0.6	66.30	--	--
GMP16	8/20/02	5.0 to 10.0	0.0	0.0	0.0	29.91	-0.6	66.20	--	--
GMP17	8/20/02	6.0 to 10.0	0.0	0.0	0.0	29.91	-0.6	67.60	--	--
GMP18	8/20/02	6.0 to 12.0	0.0	0.0	0.0	29.91	-0.6	67.30	--	--
GMP19	8/20/02	4.5 to 5.5	0.0	0.0	0.0	29.91	-0.6	66.90	--	--
GMP20	8/20/02	3.5 to 4.5	0.1	0.7	0.5	29.91	-0.6	71.10	--	--
GMP21	8/20/02	3.5 to 4.0	0.0	0.7	0.6	29.91	-0.6	69.90	--	--
IR01MW18A	8/20/02	10.3 to 25.3	59.7	0.2	0.0	NA	NA	67.10	--	--
IR01MW16A	8/20/02	7.0 to 25.0	1.4	1.0	0.0	NA	NA	67.60	--	--
IR01MW366A	8/20/02	2.7 to 12.7	NR	0.2	NR	NA	NA	NR	--	--
IR01MWI-5	8/20/02	5.0 to 20.0	75.3	NR	0.0	NA	NA	68.70	--	--
GMP01	8/28/02	6.0 to 13.5	NA	NA	NA	NA	NA	NA	--	--
GMP02	8/28/02	6.0 to 13.5	NA	NA	NA	NA	NA	NA	--	--
GMP03	8/28/02	6.0 to 13.5	NA	NA	NA	NA	NA	NA	--	--
GMP04	8/28/02	6.0 to 13.5	54.5	0.0	0.0	29.68	-1.0	83.60	--	--
GMP05	8/28/02	6.0 to 12.5	36.6	0.0	0.0	29.68	-1.0	78.20	--	--
GMP06	8/28/02	6.0 to 13.5	48.5	0.0	0.0	29.68	-1.0	76.10	--	--
GMP07	8/28/02	6.0 to 13.5	39.9	0.0	0.0	29.68	-1.0	75.70	--	--
GMP08	8/28/02	6.0 to 12.5	78.0	0.0	1.6	29.68	-1.0	75.70	--	--
GMP09	8/28/02	6.0 to 9.5	0.1	0.0	0.0	29.68	-1.0	76.40	--	--

TABLE 8: WEEKLY GAS MONITORING FIELD SCREENING DATA (Continued)

Parcel E Nonstandard Data Gaps Investigation, Landfill Gas Characterization, Hunters Point Shipyard, San Francisco, California

Location Identification	Date	Screen Interval (feet bgs)	Methane (percent by volume in air)	VOCs Background	VOCs Above Background (ppm)	Barometric Pressure (inches mercury)	Pressure in Gas Probe (inches Mercury)	Probe Gas Temperature (ºF)	Sample Number	Duplicate Sample Number
GMP10	8/28/02	4.0 to 6.5	0.6	0.0	0.0	29.69	-0.9	77.00	--	--
GMP11	8/28/02	4.0 to 5.5	NA	NA	NA	NA	NA	NA	--	--
GMP12	8/28/02	5.0 to 13.0	41.9	0.0	4.7	29.69	-0.9	78.40	--	--
GMP13	8/28/02	6.0 to 12.0	0.0	0.0	0.0	29.74	-0.6	70.80	--	--
GMP14	8/28/02	6.0 to 10.0	0.0	0.0	0.2	29.74	-0.6	69.20	--	--
GMP15	8/28/02	6.0 to 12.0	0.0	0.0	0.0	29.74	-0.6	69.20	--	--
GMP16	8/28/02	5.0 to 10.0	0.0	0.0	0.0	29.74	-0.6	68.50	--	--
GMP17	8/28/02	6.0 to 10.0	0.0	0.0	0.4	29.74	-0.6	68.50	--	--
GMP18	8/28/02	6.0 to 12.0	0.0	0.0	0.0	29.74	-0.6	68.10	--	--
GMP19	8/28/02	4.5 to 5.5	0.0	0.0	0.0	29.74	-0.6	72.90	--	--
GMP20	8/28/02	3.5 to 4.5	0.1	0.0	0.0	29.69	-0.9	77.30	--	--
GMP21	8/28/02	3.5 to 4.0	0.0	0.0	0.0	29.69	-0.9	80.10	--	--
IR01MW18A	8/28/02	10.3 to 25.3	29.3	0.0	0.0	NA	NA	78.80	--	--
IR01MW16A	8/28/02	7.0 to 25.0	0.0	0.0	0.0	NA	NA	74.90	--	--
IR01MW366A	8/28/02	2.7 to 12.7	2.7	0.0	0.0	NA	NA	73.20	--	--
IR01MWI-5	8/28/02	5.0 to 20.0	74.4	0.0	0.0	NA	NA	75.20	--	--
GMP01	9/4/02	6.0 to 13.5	NA	NA	NA	NA	NA	NA	--	--
GMP02	9/4/02	6.0 to 13.5	NA	NA	NA	NA	NA	NA	--	--
GMP03	9/4/02	6.0 to 13.5	NA	NA	NA	NA	NA	NA	--	--
GMP04	9/4/02	6.0 to 13.5	NA	NA	NA	NA	NA	NA	--	--
GMP05	9/4/02	6.0 to 12.5	52.2	0.3	0.9	29.89	-0.8	71.90	--	--
GMP06	9/4/02	6.0 to 13.5	48.8	1.6	0.0	29.89	-0.8	66.70	--	--
GMP07	9/4/02	6.0 to 13.5	40.3	0.0	0.0	29.89	-0.8	70.10	--	--
GMP08	9/4/02	6.0 to 12.5	77.8	0.0	0.9	29.89	-0.8	68.70	--	--
GMP09	9/4/02	6.0 to 9.5	0.2	0.0	0.3	29.89	-0.8	70.60	--	--
GMP10	9/4/02	4.0 to 6.5	0.0	0.0	0.9	29.89	-0.8	71.00	--	--
GMP11	9/4/02	4.0 to 5.5	NA	NA	NA	NA	NA	NA	--	--
GMP12	9/4/02	5.0 to 13.0	28.0	0.0	10.5	29.89	-0.8	74.10	--	--
GMP13	9/4/02	6.0 to 12.0	0.0	0.3	0.9	29.97	-0.7	71.70	--	--
GMP14	9/4/02	6.0 to 10.0	0.0	0.0	0.0	29.90	NA	75.50	--	--
GMP15	9/4/02	6.0 to 12.0	0.0	0.0	0.9	29.90	-0.8	73.90	--	--
GMP16	9/4/02	5.0 to 10.0	0.0	0.0	0.3	29.90	-0.8	75.20	--	--
GMP17	9/4/02	6.0 to 10.0	0.0	0.0	0.0	29.90	-0.8	77.00	--	--
GMP18	9/4/02	6.0 to 12.0	0.0	0.0	0.0	29.90	NA	75.50	--	--
GMP19	9/4/02	4.5 to 5.5	0.0	0.0	0.0	29.90	-0.8	76.10	--	--

TABLE 8: WEEKLY GAS MONITORING FIELD SCREENING DATA (Continued)

Parcel E Nonstandard Data Gaps Investigation, Landfill Gas Characterization, Hunters Point Shipyard, San Francisco, California

Location Identification	Date	Screen Interval (feet bgs)	Methane (percent by volume in air)	VOCs Background	VOCs Above Background (ppm)	Barometric Pressure (inches mercury)	Pressure in Gas Probe (inches Mercury)	Probe Gas Temperature (ºF)	Sample Number	Duplicate Sample Number
GMP20	9/4/02	3.5 to 4.5	0.3	0.0	0.3	29.89	-0.8	71.00	--	--
GMP21	9/4/02	3.5 to 4.0	0.1	0.0	0.0	29.89	-0.8	72.30	--	--
IR01MW18A	9/4/02	10.3 to 25.3	59.4	0.0	0.3	NA	NA	67.80	--	--
IR01MW16A	9/4/02	7.0 to 25.0	49.5	0.0	0.9	NA	NA	73.70	--	--
IR01MW366A	9/4/02	2.7 to 12.7	3.9	0.0	0.0	NA	NA	73.50	--	--
IR01MWI-5	9/4/02	5.0 to 20.0	74.4	0.0	0.0	NA	NA	71.90	--	--
GMP01	9/12/02	6.0 to 13.5	NA	NA	NA	NA	NA	NA	--	--
GMP02	9/12/02	6.0 to 13.5	NA	NA	NA	NA	NA	NA	--	--
GMP03	9/12/02	6.0 to 13.5	NA	NA	NA	NA	NA	NA	--	--
GMP04	9/12/02	6.0 to 13.5	NA	NA	NA	NA	NA	NA	--	--
GMP05	9/12/02	6.0 to 12.5	NA	NA	NA	NA	NA	NA	--	--
GMP06	9/12/02	6.0 to 13.5	NA	NA	NA	NA	NA	NA	--	--
GMP07	9/12/02	6.0 to 13.5	NA	NA	NA	NA	NA	NA	--	--
GMP08	9/12/02	6.0 to 12.5	81.2	0.0	2.1	29.91	-0.6	68.00	--	--
GMP09	9/12/02	6.0 to 9.5	0.2	0.0	0.0	29.91	-0.6	68.30	--	--
GMP10	9/12/02	4.0 to 6.5	0.2	0.0	0.0	29.82	-0.8	68.70	--	--
GMP11	9/12/02	4.0 to 5.5	NA	NA	NA	NA	NA	NA	--	--
GMP12	9/12/02	5.0 to 13.0	19.8	0.0	5.8	29.82	-0.8	71.00	--	--
GMP13	9/12/02	6.0 to 12.0	0.0	0.0	0.0	29.91	-0.6	76.60	--	--
GMP14	9/12/02	6.0 to 10.0	0.0	0.0	0.0	29.91	-0.6	75.50	--	--
GMP15	9/12/02	6.0 to 12.0	0.0	0.0	0.0	29.91	-0.6	75.00	--	--
GMP16	9/12/02	5.0 to 10.0	0.0	0.0	0.0	29.91	-0.6	75.50	--	--
GMP17	9/12/02	6.0 to 10.0	0.0	0.0	0.0	29.91	-0.6	73.50	--	--
GMP18	9/12/02	6.0 to 12.0	0.0	0.0	0.0	29.91	-0.6	74.10	--	--
GMP19	9/12/02	4.5 to 5.5	0.0	0.0	0.0	29.91	NA	72.60	--	--
GMP20	9/12/02	3.5 to 4.5	0.1	0.0	0.0	29.82	-0.8	71.00	--	--
GMP21	9/12/02	3.5 to 4.0	0.1	0.0	0.0	29.82	-0.8	69.60	--	--
IR01MW18A	9/12/02	10.3 to 25.3	62.7	0.0	0.0	NA	NA	53.70	--	--
IR01MW16A	9/12/02	7.0 to 25.0	59.4	0.0	0.0	NA	NA	68.10	--	--
IR01MW366A	9/12/02	2.7 to 12.7	14.1	0.0	0.0	NA	NA	71.90	--	--
IR01MWI-5	9/12/02	5.0 to 20.0	75.8	0.0	0.0	NA	NA	53.90	--	--
GMP01A	9/18/02	6.0 to 13.5	NA	NA	NA	NA	NA	NA	--	--
GMP02A	9/18/02	6.0 to 13.5	NA	NA	NA	NA	NA	NA	--	--
GMP03A	9/18/02	6.0 to 13.5	NA	NA	NA	NA	NA	NA	--	--
GMP04A	9/18/02	6.0 to 13.5	NA	NA	NA	NA	NA	NA	--	--

TABLE 8: WEEKLY GAS MONITORING FIELD SCREENING DATA (Continued)

Parcel E Nonstandard Data Gaps Investigation, Landfill Gas Characterization, Hunters Point Shipyard, San Francisco, California

Location Identification	Date	Screen Interval (feet bgs)	Methane (percent by volume in air)	VOCs Background	VOCs Above Background (ppm)	Barometric Pressure (inches mercury)	Pressure in Gas Probe (inches Mercury)	Probe Gas Temperature (ºF)	Sample Number	Duplicate Sample Number
GMP05A	9/18/02	6.0 to 12.5	NA	NA	NA	NA	NA	NA	--	--
GMP06A	9/18/02	6.0 to 13.5	NA	NA	NA	NA	NA	NA	--	--
GMP07A	9/18/02	6.0 to 13.5	NA	NA	NA	NA	NA	NA	--	--
GMP08A	9/18/02	6.0 to 12.5	NA	NA	NA	NA	NA	NA	--	--
GMP09	9/18/02	6.0 to 9.5	0.0	0.0	0.0	29.87	0.0	72.50	--	--
GMP10	9/18/02	4.0 to 6.5	0.4	0.0	0.0	29.87	NA	72.80	--	--
GMP11	9/18/02	4.0 to 5.5	NA	NA	NA	NA	NA	NA	--	--
GMP12	9/18/02	5.0 to 13.0	15.3	0.0	18.6	29.81	0.1	73.90	--	--
GMP13	9/18/02	6.0 to 12.0	0.0	0.3	0.7	29.87	NA	76.00	--	--
GMP14	9/18/02	6.0 to 10.0	0.0	0.0	0.0	29.87	0.0	67.20	--	--
GMP15	9/18/02	6.0 to 12.0	0.0	0.0	0.0	29.87	0.0	69.40	--	--
GMP16	9/18/02	5.0 to 10.0	0.0	0.0	0.0	29.87	0.0	69.60	--	--
GMP17	9/18/02	6.0 to 10.0	0.0	0.0	0.0	29.87	0.0	69.60	--	--
GMP18	9/18/02	6.0 to 12.0	0.0	0.0	0.0	29.87	0.0	71.00	--	--
GMP19	9/18/02	4.5 to 5.5	0.0	0.0	0.0	29.87	0.0	70.80	--	--
GMP20	9/18/02	3.5 to 4.5	0.0	0.0	0.0	29.87	0.0	73.20	--	--
GMP21	9/18/02	3.5 to 4.0	0.0	0.0	0.0	29.87	0.0	72.60	--	--
IR01MW18A	9/18/02	10.3 to 25.3	60.4	0.5	0.0	NA	NA	77.50	--	--
IR01MW16A	9/18/02	7.0 to 25.0	57.4	1.3	0.0	NA	NA	74.40	--	--
IR01MW366A	9/18/02	2.7 to 12.7	15.1	0.0	0.0	NA	NA	70.80	--	--
IR01MWI-5	9/18/02	5.0 to 20.0	70.2	0.0	0.0	29.81	NA	78.90	--	--
GMP01A	9/25/02	6.0 to 13.5	NA	NA	NA	NA	NA	NA	--	--
GMP02A	9/25/02	6.0 to 13.5	NA	NA	NA	NA	NA	NA	--	--
GMP03A	9/25/02	6.0 to 13.5	NA	NA	NA	NA	NA	NA	--	--
GMP04A	9/25/02	6.0 to 13.5	NA	NA	NA	NA	NA	NA	--	--
GMP05A	9/25/02	6.0 to 12.5	NA	NA	NA	NA	NA	NA	--	--
GMP06A	9/25/02	6.0 to 13.5	NA	NA	NA	NA	NA	NA	--	--
GMP07A	9/25/02	6.0 to 13.5	NA	NA	NA	NA	NA	NA	--	--
GMP08A	9/25/02	6.0 to 12.5	NA	NA	NA	NA	NA	NA	--	--
GMP09	9/25/02	6.0 to 9.5	0.2	0.0	0.0	29.88	0.4	71.60	--	--
GMP10	9/25/02	4.0 to 6.5	0.0	0.0	0.6	29.88	0.4	71.00	--	--
GMP11	9/25/02	4.0 to 5.5	NA	NA	NA	NA	NA	NA	--	--
GMP12	9/25/02	5.0 to 13.0	11.6	0.0	0.0	29.77	0.1	71.40	--	--
GMP13	9/25/02	6.0 to 12.0	0.0	0.0	0.4	29.88	-0.1	70.70	--	--
GMP14	9/25/02	6.0 to 10.0	0.0	0.0	0.2	29.88	0.4	70.30	--	--

TABLE 8: WEEKLY GAS MONITORING FIELD SCREENING DATA (Continued)

Parcel E Nonstandard Data Gaps Investigation, Landfill Gas Characterization, Hunters Point Shipyard, San Francisco, California

Location Identification	Date	Screen Interval (feet bgs)	Methane (percent by volume in air)	VOCs Background	VOCs Above Background (ppm)	Barometric Pressure (inches mercury)	Pressure in Gas Probe (inches Mercury)	Probe Gas Temperature (ºF)	Sample Number	Duplicate Sample Number
GMP15	9/25/02	6.0 to 12.0	0.0	0.0	0.0	29.88	0.4	68.50	--	--
GMP16	9/25/02	5.0 to 10.0	0.0	0.0	0.0	29.88	0.4	69.40	--	--
GMP17	9/25/02	6.0 to 10.0	0.0	0.0	0.0	29.88	0.4	70.50	--	--
GMP18	9/25/02	6.0 to 12.0	0.0	0.0	0.0	29.88	0.4	75.00	--	--
GMP19	9/25/02	4.5 to 5.5	0.0	0.0	0.0	29.88	0.4	74.80	--	--
GMP20	9/25/02	3.5 to 4.5	0.0	0.0	0.0	29.88	0.4	71.60	--	--
GMP21	9/25/02	3.5 to 4.0	0.0	0.0	0.0	29.88	0.4	69.90	--	--
IR01MW18A	9/25/02	10.3 to 25.3	60.4	0.0	0.0	NA	NA	68.30	--	--
IR01MW16A	9/25/02	7.0 to 25.0	56.1	0.0	0.0	NA	NA	68.10	--	--
IR01MW366A	9/25/02	2.7 to 12.7	6.7	0.0	0.0	NA	NA	72.20	--	--
IR01MWI-5	9/25/02	5.0 to 20.0	70.0	0.0	0.0	NA	NA	67.40	--	--
GMP01A	10/2/02	6.0 to 13.5	0.9	0.0	85.6	29.99	0.2	76.60	--	--
GMP02A	10/2/02	6.0 to 13.5	4.0	0.0	30.8	29.99	0.2	75.00	--	--
GMP03A	10/2/02	6.0 to 13.5	7.7	0.0	8.2	29.99	0.2	76.80	--	--
GMP04A	10/2/02	6.0 to 13.5	0.0	0.0	25.4	29.96	0.2	78.90	--	--
GMP05A	10/2/02	6.0 to 12.5	NA	NA	NA	NA	NA	NA	--	--
GMP06A	10/2/02	6.0 to 13.5	0.0	2.8	0.0	29.96	0.2	86.10	--	--
GMP07A	10/2/02	6.0 to 13.5	0.0	0.0	102.5	29.96	0.2	86.90	--	--
GMP08A	10/2/02	6.0 to 12.5	16.5	0.0	0.0	29.96	0.2	81.10	--	--
GMP09	10/2/02	6.0 to 9.5	0.0	0.0	0.0	29.96	0.2	79.50	--	--
GMP10	10/2/02	4.0 to 6.5	0.0	0.0	0.0	29.96	0.2	78.80	--	--
GMP11	10/2/02	4.0 to 5.5	NA	NA	NA	NA	NA	NA	--	--
GMP12	10/2/02	5.0 to 13.0	9.4	0.0	18.8	29.99	0.2	76.10	--	--
GMP13	10/2/02	6.0 to 12.0	0.0	0.0	0.0	29.89	0.3	81.50	--	--
GMP14	10/2/02	6.0 to 10.0	0.0	0.0	0.0	29.89	0.3	80.20	--	--
GMP15	10/2/02	6.0 to 12.0	0.0	0.0	0.0	29.89	0.3	80.00	--	--
GMP16	10/2/02	5.0 to 10.0	0.0	0.0	0.0	29.89	0.3	81.60	--	--
GMP17	10/2/02	6.0 to 10.0	0.0	0.0	0.0	29.89	0.3	79.30	--	--
GMP18	10/2/02	6.0 to 12.0	0.0	0.0	0.0	29.89	0.3	78.90	--	--
GMP19	10/2/02	4.5 to 5.5	0.0	0.0	0.0	29.89	0.3	78.40	--	--
GMP20	10/2/02	3.5 to 4.5	0.0	0.0	0.0	29.96	0.2	82.00	--	--
GMP21	10/2/02	3.5 to 4.0	0.0	0.0	0.0	29.96	0.2	80.00	--	--
GMP22	10/2/02	6.0 to 13.5	23.8	0.0	2.1	30.30	0.0	68.90	--	--
GMP23	10/2/02	6.0 to 13.5	49.8	0.0	0.3	29.99	0.2	75.30	--	--
GMP24	10/2/02	6.0 to 13.0	44.8	0.0	2.1	29.99	0.2	73.90	--	--

TABLE 8: WEEKLY GAS MONITORING FIELD SCREENING DATA (Continued)

Parcel E Nonstandard Data Gaps Investigation, Landfill Gas Characterization, Hunters Point Shipyard, San Francisco, California

Location Identification	Date	Screen Interval (feet bgs)	Methane (percent by volume in air)	VOCs Background	VOCs Above Background (ppm)	Barometric Pressure (inches mercury)	Pressure in Gas Probe (inches Mercury)	Probe Gas Temperature (ºF)	Sample Number	Duplicate Sample Number
GMP25	10/2/02	6.5 to 11.5	28.9	0.0	2.6	29.99	0.2	77.90	--	--
GMP26	10/2/02	6.0 to 11.0	10.4	0.0	0.0	29.99	0.2	76.00	--	--
IR01MW18A	10/2/02	10.3 to 25.3	67.0	0.0	0.0	NA	NA	81.60	--	--
IR01MW16A	10/2/02	7.0 to 25.0	57.1	0.0	0.0	NA	NA	77.70	--	--
IR01MW366A	10/2/02	2.7 to 12.7	15.3	0.0	0.0	NA	NA	79.80	--	--
IR01MWI-5	10/2/02	5.0 to 20.0	78.9	0.0	0.0	NA	NA	78.20	--	--
GMP01A	10/8/02	6.0 to 13.5	0.1	0.0	76.7	29.78	0.6	82.80	--	--
GMP02A	10/8/02	6.0 to 13.5	2.3	0.0	32.9	29.78	0.6	83.60	--	--
GMP03A	10/8/02	6.0 to 13.5	4.2	0.0	6.9	29.78	0.6	81.60	--	--
GMP04A	10/8/02	6.0 to 13.5	0.0	0.0	9.1	29.78	0.6	82.50	--	--
GMP05A	10/8/02	6.0 to 12.5	0.0	0.0	4.3	29.78	0.6	84.00	--	--
GMP06A	10/8/02	6.0 to 13.5	1.2	0.0	1.3	29.78	0.6	86.00	--	--
GMP07A	10/8/02	6.0 to 13.5	0.0	0.0	45.9	29.82	0.4	85.00	--	--
GMP08A	10/8/02	6.0 to 12.5	12.2	0.0	0.0	29.82	NA	85.20	--	--
GMP09	10/8/02	6.0 to 9.5	0.0	0.0	0.0	29.82	0.4	83.00	--	--
GMP10	10/8/02	4.0 to 6.5	1.4	0.0	0.0	29.76	0.5	81.50	--	--
GMP11	10/8/02	4.0 to 5.5	NA	NA	NA	NA	NA	NA	--	--
GMP12	10/8/02	5.0 to 13.0	0.2	0.0	99.7	29.76	0.5	82.50	--	--
GMP13	10/8/02	6.0 to 12.0	0.0	0.0	0.0	29.82	0.4	88.00	--	--
GMP14	10/8/02	6.0 to 10.0	0.0	0.0	0.0	29.82	0.4	88.20	--	--
GMP15	10/8/02	6.0 to 12.0	0.0	0.0	0.0	29.82	0.4	88.70	--	--
GMP16	10/8/02	5.0 to 10.0	0.0	0.0	0.0	29.82	0.4	87.40	--	--
GMP17	10/8/02	6.0 to 10.0	0.0	0.0	0.0	29.82	0.4	86.80	--	--
GMP18	10/8/02	6.0 to 12.0	0.0	0.0	0.0	29.82	0.4	85.20	--	--
GMP19	10/8/02	4.5 to 5.5	0.0	0.0	0.0	29.82	0.4	86.30	--	--
GMP20	10/8/02	3.5 to 4.5	0.0	0.0	0.0	29.76	0.5	80.40	--	--
GMP21	10/8/02	3.5 to 4.0	0.0	0.0	0.0	29.76	NA	80.00	--	--
GMP22	10/8/02	6.0 to 13.5	10.5	0.0	0.0	29.98	0.5	63.80	--	--
GMP23	10/8/02	6.0 to 13.5	41.2	0.8	8.4	29.98	0.5	65.10	--	--
GMP24	10/8/02	6.0 to 13.0	37.4	1.2	7.0	29.98	0.5	64.20	--	--
GMP25	10/8/02	6.5 to 11.5	24.7	0.0	6.6	29.98	0.5	64.20	--	--
GMP26	10/8/02	6.0 to 11.0	6.6	0.8	0.8	29.98	0.5	64.90	--	--
IR01MW18A	10/8/02	10.3 to 25.3	68.6	0.0	0.0	29.74	NA	75.50	--	--
IR01MW16A	10/8/02	7.0 to 25.0	62.5	0.0	0.0	29.76	NA	78.80	--	--
IR01MW366A	10/8/02	2.7 to 12.7	21.5	0.0	0.0	29.82	NA	86.70	--	--

TABLE 8: WEEKLY GAS MONITORING FIELD SCREENING DATA (Continued)

Parcel E Nonstandard Data Gaps Investigation, Landfill Gas Characterization, Hunters Point Shipyard, San Francisco, California

Location Identification	Date	Screen Interval (feet bgs)	Methane (percent by volume in air)	VOCs Background	VOCs Above Background (ppm)	Barometric Pressure (inches mercury)	Pressure in Gas Probe (inches Mercury)	Probe Gas Temperature (ºF)	Sample Number	Duplicate Sample Number
IR01MWI-5	10/8/02	5.0 to 20.0	78.4	0.0	0.0	29.74	NA	75.90	--	--
GMP01A	10/17/02	6.0 to 13.5	2.4	0.5	20.1	29.95	0.5	66.80	--	--
GMP02A	10/17/02	6.0 to 13.5	1.1	0.0	8.4	29.92	0.3	67.10	--	--
GMP03A	10/17/02	6.0 to 13.5	0.0	0.0	5.1	29.92	0.3	67.50	--	--
GMP04A	10/17/02	6.0 to 13.5	0.0	0.0	3.6	29.92	0.3	69.10	--	--
GMP05A	10/17/02	6.0 to 12.5	0.0	0.0	0.7	29.90	-0.6	59.10	--	--
GMP06A	10/17/02	6.0 to 13.5	0.0	0.0	0.7	29.91	-0.6	59.00	--	--
GMP07A	10/17/02	6.0 to 13.5	0.0	0.0	33.3	29.91	-0.6	58.20	--	--
GMP08A	10/17/02	6.0 to 12.5	9.6	0.0	0.0	29.91	-0.6	58.20	--	--
GMP09	10/17/02	6.0 to 9.5	0.0	0.0	0.7	29.91	-0.6	57.90	--	--
GMP10	10/17/02	4.0 to 6.5	0.0	0.0	0.0	30.04	0.5	62.50	--	--
GMP11	10/17/02	4.0 to 5.5	NA	NA	NA	NA	NA	NA	--	--
GMP12	10/17/02	5.0 to 13.0	0.0	0.0	81.0	30.04	0.5	61.30	--	--
GMP13	10/17/02	6.0 to 12.0	0.0	0.0	0.0	29.90	-0.6	64.20	--	--
GMP14	10/17/02	6.0 to 10.0	0.0	0.0	0.0	29.90	-0.6	66.50	--	--
GMP15	10/17/02	6.0 to 12.0	0.0	0.0	0.0	29.93	0.3	69.80	--	--
GMP16	10/17/02	5.0 to 10.0	0.0	0.0	0.0	29.90	-0.6	63.60	--	--
GMP17	10/17/02	6.0 to 10.0	0.0	0.0	0.0	29.90	-0.6	62.80	--	--
GMP18	10/17/02	6.0 to 12.0	0.0	0.0	0.0	29.90	-0.6	63.10	--	--
GMP19	10/17/02	4.5 to 5.5	0.0	0.0	0.7	29.91	-0.7	63.60	--	--
GMP20	10/17/02	3.5 to 4.5	0.1	0.0	0.0	30.04	0.5	62.90	--	--
GMP21	10/17/02	3.5 to 4.0	0.0	0.0	0.0	30.04	0.5	62.10	--	--
GMP22	10/17/02	6.0 to 13.5	11.1	2.0	4.1	29.84	0.1	70.20	--	--
GMP23	10/17/02	6.0 to 13.5	10.2	0.0	5.1	29.94	0.3	67.80	--	--
GMP24	10/17/02	6.0 to 13.0	30.2	0.0	58.6	29.92	0.3	68.70	--	--
GMP25	10/17/02	6.5 to 11.5	23.0	0.9	12.3	29.95	0.5	68.60	--	--
GMP26	10/17/02	6.0 to 11.0	1.7	2.0	6.4	29.85	0.2	73.00	--	--
IR01MW18A	10/17/02	10.3 to 25.3	63.7	0.0	0.0	30.04	0.5	63.90	--	--
IR01MW16A	10/17/02	7.0 to 25.0	43.8	0.0	0.0	30.04	0.5	62.10	--	--
IR01MW366A	10/17/02	2.7 to 12.7	2.3	0.0	0.0	30.04	0.5	64.20	--	--
IR01MWI-5	10/17/02	5.0 to 20.0	72.6	0.0	0.0	30.04	0.5	62.90	--	--
GMP01A	10/22/02	6.0 to 13.5	0.1	0.1	16.3	30.04	0.6	56.60	--	--
GMP02A	10/22/02	6.0 to 13.5	5.4	0.0	6.5	30.04	0.6	56.60	--	--
GMP03A	10/22/02	6.0 to 13.5	0.0	0.0	0.0	30.04	0.6	58.80	--	--
GMP04A	10/22/02	6.0 to 13.5	0.0	0.0	1.6	30.04	0.6	57.50	--	--

TABLE 8: WEEKLY GAS MONITORING FIELD SCREENING DATA (Continued)

Parcel E Nonstandard Data Gaps Investigation, Landfill Gas Characterization, Hunters Point Shipyard, San Francisco, California

Location Identification	Date	Screen Interval (feet bgs)	Methane (percent by volume in air)	VOCs Background	VOCs Above Background (ppm)	Barometric Pressure (inches mercury)	Pressure in Gas Probe (inches Mercury)	Probe Gas Temperature (ºF)	Sample Number	Duplicate Sample Number
GMP05A	10/22/02	6.0 to 12.5	0.0	0.0	0.0	30.04	0.6	56.60	--	--
GMP06A	10/22/02	6.0 to 13.5	0.0	0.0	1.6	30.04	0.6	55.90	--	--
GMP07A	10/22/02	6.0 to 13.5	0.0	0.0	31.7	30.04	0.6	56.40	--	--
GMP08A	10/22/02	6.0 to 12.5	10.2	0.0	4.8	30.04	0.6	56.30	--	--
GMP09	10/22/02	6.0 to 9.5	0.0	0.0	0.0	30.04	0.6	57.00	--	--
GMP10	10/22/02	4.0 to 6.5	0.0	0.0	0.0	30.04	0.6	56.30	--	--
GMP11	10/22/02	4.0 to 5.5	NA	NA	NA	NA	NA	NA	--	--
GMP12	10/22/02	5.0 to 13.0	1.0	0.0	47.3	30.04	0.6	56.60	--	--
GMP13	10/22/02	6.0 to 12.0	0.0	0.0	0.0	30.04	0.6	57.50	--	--
GMP14	10/22/02	6.0 to 10.0	0.0	0.0	0.0	30.04	0.6	56.60	--	--
GMP15	10/22/02	6.0 to 12.0	0.0	0.0	0.0	30.04	0.6	57.00	--	--
GMP16	10/22/02	5.0 to 10.0	0.0	0.0	0.0	30.04	0.6	56.40	--	--
GMP17	10/22/02	6.0 to 10.0	0.0	0.0	0.0	30.04	0.6	56.80	--	--
GMP18	10/22/02	6.0 to 12.0	0.0	0.0	0.0	30.04	0.6	57.30	--	--
GMP19	10/22/02	4.5 to 5.5	0.0	0.0	0.0	30.04	0.6	56.80	--	--
GMP20	10/22/02	3.5 to 4.5	0.1	0.0	0.0	30.04	0.6	56.60	--	--
GMP21	10/22/02	3.5 to 4.0	0.0	0.0	0.0	30.04	0.6	56.30	--	--
GMP22	10/22/02	6.0 to 13.5	5.7	0.0	21.5	30.04	0.6	58.20	--	--
GMP23	10/22/02	6.0 to 13.5	0.2	0.0	8.1	30.04	0.6	60.70	--	--
GMP24	10/22/02	6.0 to 13.0	30.5	0.0	8.1	30.04	0.6	60.00	--	--
GMP25	10/22/02	6.5 to 11.5	12.0	0.0	6.5	30.04	0.6	59.10	--	--
GMP26	10/22/02	6.0 to 11.0	0.1	0.0	0.0	30.04	0.6	60.90	--	--
IR01MW18A	10/22/02	10.3 to 25.3	64.6	0.0	0.0	30.04	0.6	57.20	--	--
IR01MW16A	10/22/02	7.0 to 25.0	0.0	0.0	0.0	30.04	0.6	57.00	--	--
IR01MW366A	10/22/02	2.7 to 12.7	0.5	0.0	0.0	30.04	0.6	57.70	--	--
IR01MWI-5	10/22/02	5.0 to 20.0	72.3	0.0	0.0	30.04	0.6	56.80	--	--
GMP01A	10/31/02	6.0 to 13.5	2.8	0.0	3.7	29.98	-0.6	66.70	--	--
GMP02A	10/31/02	6.0 to 13.5	0.6	0.0	36.4	29.98	-0.6	67.10	--	--
GMP03A	10/31/02	6.0 to 13.5	0.1	0.0	0.0	30.05	-0.5	62.90	--	--
GMP04A	10/31/02	6.0 to 13.5	0.0	0.0	1.9	29.98	-0.6	62.20	--	--
GMP05A	10/31/02	6.0 to 12.5	0.0	0.0	0.0	29.98	-0.6	62.40	--	--
GMP06A	10/31/02	6.0 to 13.5	0.0	0.0	0.0	29.98	-0.6	66.60	--	--
GMP07A	10/31/02	6.0 to 13.5	0.0	0.0	36.4	29.98	-0.6	69.80	--	--
GMP08A	10/31/02	6.0 to 12.5	9.9	0.0	5.7	30.05	-0.5	61.00	--	--
GMP09	10/31/02	6.0 to 9.5	0.0	0.0	0.0	29.98	-0.6	62.00	--	--

TABLE 8: WEEKLY GAS MONITORING FIELD SCREENING DATA (Continued)

Parcel E Nonstandard Data Gaps Investigation, Landfill Gas Characterization, Hunters Point Shipyard, San Francisco, California

Location Identification	Date	Screen Interval (feet bgs)	Methane (percent by volume in air)	VOCs Background	VOCs Above Background (ppm)	Barometric Pressure (inches mercury)	Pressure in Gas Probe (inches Mercury)	Probe Gas Temperature (ºF)	Sample Number	Duplicate Sample Number
GMP10	10/31/02	4.0 to 6.5	0.0	0.0	0.0	30.05	-0.5	57.50	--	--
GMP11	10/31/02	4.0 to 5.5	NA	NA	NA	NA	NA	NA	--	--
GMP12	10/31/02	5.0 to 13.0	1.6	0.0	7.6	29.98	-0.6	66.00	--	--
GMP13	10/31/02	6.0 to 12.0	0.0	0.0	0.0	29.89	-0.5	63.80	--	--
GMP14	10/31/02	6.0 to 10.0	0.0	0.0	0.0	29.89	-0.5	64.70	--	--
GMP15	10/31/02	6.0 to 12.0	0.0	0.0	0.0	29.90	-0.6	64.90	--	--
GMP16	10/31/02	5.0 to 10.0	0.0	0.0	0.0	29.90	-0.6	64.90	--	--
GMP17	10/31/02	6.0 to 10.0	0.0	0.0	0.0	29.90	-0.6	65.80	--	--
GMP18	10/31/02	6.0 to 12.0	0.0	0.0	0.0	29.90	-0.6	68.10	--	--
GMP19	10/31/02	4.5 to 5.5	0.0	0.0	0.0	29.90	-0.6	68.40	--	--
GMP20	10/31/02	3.5 to 4.5	0.0	0.0	0.0	30.05	-0.5	61.40	--	--
GMP21	10/31/02	3.5 to 4.0	0.0	0.0	0.0	30.05	-0.5	57.70	--	--
GMP22	10/31/02	6.0 to 13.5	1.6	1.1	13.4	29.98	-0.6	62.60	--	--
GMP23	10/31/02	6.0 to 13.5	0.3	0.0	0.0	29.98	-0.6	62.20	--	--
GMP24	10/31/02	6.0 to 13.0	1.6	0.0	7.6	29.99	-0.5	62.40	--	--
GMP25	10/31/02	6.5 to 11.5	0.5	0.0	9.6	30.00	-0.5	66.00	--	--
GMP26	10/31/02	6.0 to 11.0	0.0	0.0	0.0	30.00	-0.5	61.30	--	--
IR01MW18A	10/31/02	10.3 to 25.3	63.7	0.0	0.0	29.96	NA	67.20	--	--
IR01MW16A	10/31/02	7.0 to 25.0	51.6	0.0	0.0	29.93	NA	67.80	--	--
IR01MW366A	10/31/02	2.7 to 12.7	1.8	0.0	0.0	29.90	NA	67.00	--	--
IR01MWI-5	10/31/02	5.0 to 20.0	71.8	0.0	0.0	29.96	NA	71.00	--	--
GMP01A	11/6/02	6.0 to 13.5	1.4	1.2	45.0	30.04	0.1	73.80	--	--
GMP02A	11/6/02	6.0 to 13.5	1.9	1.2	42.5	30.04	0.1	74.80	--	--
GMP03A	11/6/02	6.0 to 13.5	0.4	1.2	37.7	30.09	0.1	59.70	--	--
GMP04A	11/6/02	6.0 to 13.5	0.0	0.0	18.9	30.02	0.0	68.90	--	--
GMP05A	11/6/02	6.0 to 12.5	0.0	0.0	0.0	30.02	0.0	69.70	--	--
GMP06A	11/6/02	6.0 to 13.5	0.0	0.0	0.0	30.02	0.0	64.20	--	--
GMP07A	11/6/02	6.0 to 13.5	0.0	1.2	124.9	30.04	0.1	74.80	--	--
GMP08A	11/6/02	6.0 to 12.5	8.8	1.2	11.5	30.04	0.1	72.00	--	--
GMP09	11/6/02	6.0 to 9.5	0.0	1.2	0.0	30.04	0.1	68.40	--	--
GMP10	11/6/02	4.0 to 6.5	0.0	1.2	0.0	30.04	0.1	72.50	--	--
GMP11	11/6/02	4.0 to 5.5	NA	NA	NA	NA	NA	NA	--	--
GMP12	11/6/02	5.0 to 13.0	1.6	1.2	106.9	30.04	0.1	73.20	--	--
GMP13	11/6/02	6.0 to 12.0	0.1	0.0	0.0	29.98	0.4	69.60	--	--
GMP14	11/6/02	6.0 to 10.0	0.0	0.0	0.0	29.98	0.4	69.80	--	--

TABLE 8: WEEKLY GAS MONITORING FIELD SCREENING DATA (Continued)

Parcel E Nonstandard Data Gaps Investigation, Landfill Gas Characterization, Hunters Point Shipyard, San Francisco, California

Location Identification	Date	Screen Interval (feet bgs)	Methane (percent by volume in air)	VOCs Background	VOCs Above Background (ppm)	Barometric Pressure (inches mercury)	Pressure in Gas Probe (inches Mercury)	Probe Gas Temperature (ºF)	Sample Number	Duplicate Sample Number
GMP15	11/6/02	6.0 to 12.0	0.0	0.0	0.0	29.98	0.4	68.00	--	--
GMP16	11/6/02	5.0 to 10.0	0.0	0.0	0.0	29.98	0.4	67.60	--	--
GMP17	11/6/02	6.0 to 10.0	0.0	0.0	0.0	29.98	0.4	67.40	--	--
GMP18	11/6/02	6.0 to 12.0	0.0	0.0	0.0	29.98	0.4	67.80	--	--
GMP19	11/6/02	4.5 to 5.5	0.0	0.0	0.0	29.98	0.4	66.70	--	--
GMP20	11/6/02	3.5 to 4.5	0.1	1.2	0.0	30.04	0.1	72.50	--	--
GMP21	11/6/02	3.5 to 4.0	0.0	1.2	0.0	30.04	0.1	74.10	--	--
GMP22	11/6/02	6.0 to 13.5	1.0	0.0	48.6	29.98	0.4	70.20	--	--
GMP23	11/6/02	6.0 to 13.5	0.5	0.0	23.2	29.98	0.4	69.40	--	--
GMP24	11/6/02	6.0 to 13.0	2.1	0.0	91.8	30.02	0.0	68.20	--	--
GMP25	11/6/02	6.5 to 11.5	1.0	0.0	59.4	30.02	0.0	68.00	--	--
GMP26	11/6/02	6.0 to 11.0	0.0	0.0	0.0	30.02	0.0	69.70	--	--
IR01MW18A	11/6/02	10.3 to 25.3	64.5	1.2	0.0	30.04	NA	73.90	--	--
IR01MW16A	11/6/02	7.0 to 25.0	55.2	1.2	0.0	30.04	NA	70.50	--	--
IR01MW366A	11/6/02	2.7 to 12.7	10.2	1.2	0.0	30.04	NA	74.10	--	--
IR01MWI-5	11/6/02	5.0 to 20.0	70.6	1.2	0.0	30.04	NA	72.30	--	--
GMP01A	11/13/02	6.0 to 13.5	4.3	0.0	0.0	30.12	0.0	66.90	GMP01ASG001	--
GMP02A	11/13/02	6.0 to 13.5	2.3	0.0	0.0	30.12	0.0	68.10	GMP02ASG001	GMP02ASG002
GMP03A	11/13/02	6.0 to 13.5	0.0	0.0	0.0	30.10	0.1	68.70	--	--
GMP04A	11/13/02	6.0 to 13.5	0.1	0.0	14.9	30.17	0.0	64.80	GMP04ASG001	GMP04ASG002
GMP05A	11/13/02	6.0 to 12.5	0.0	0.0	0.0	30.17	0.0	65.70	--	--
GMP06A	11/13/02	6.0 to 13.5	0.0	0.0	0.0	30.17	0.0	64.00	--	--
GMP07A	11/13/02	6.0 to 13.5	0.0	0.0	9.4	30.10	0.9	63.00	GMP07ASG001	--
GMP08A	11/13/02	6.0 to 12.5	6.9	0.0	0.0	30.10	0.9	65.50	GMP08ASG001	--
GMP09	11/13/02	6.0 to 9.5	0.0	0.0	0.0	30.10	0.9	64.10	--	--
GMP10	11/13/02	4.0 to 6.5	0.0	0.0	0.0	30.12	0.0	69.60	--	--
GMP11	11/13/02	4.0 to 5.5	NA	NA	NA	NA	NA	NA	--	--
GMP12	11/13/02	5.0 to 13.0	1.8	0.0	25.6	30.12	0.0	68.20	GMP12SG005	--
GMP13	11/13/02	6.0 to 12.0	0.0	0.0	1.7	30.12	2.2	75.60	--	--
GMP14	11/13/02	6.0 to 10.0	0.0	0.0	0.0	30.12	2.2	74.30	--	--
GMP15	11/13/02	6.0 to 12.0	0.0	0.0	0.0	30.12	2.2	74.80	--	--
GMP16	11/13/02	5.0 to 10.0	0.0	0.0	0.0	30.12	2.2	73.40	--	--
GMP17	11/13/02	6.0 to 10.0	0.0	0.0	0.0	30.12	2.2	77.00	--	--
GMP18	11/13/02	6.0 to 12.0	0.0	0.0	0.0	30.12	2.2	77.90	--	--
GMP19	11/13/02	4.5 to 5.5	0.0	0.0	0.0	30.12	2.2	77.10	--	--

TABLE 8: WEEKLY GAS MONITORING FIELD SCREENING DATA (Continued)

Parcel E Nonstandard Data Gaps Investigation, Landfill Gas Characterization, Hunters Point Shipyard, San Francisco, California

Location Identification	Date	Screen Interval (feet bgs)	Methane (percent by volume in air)	VOCs Background	VOCs Above Background (ppm)	Barometric Pressure (inches mercury)	Pressure in Gas Probe (inches Mercury)	Probe Gas Temperature (ºF)	Sample Number	Duplicate Sample Number
GMP20	11/13/02	3.5 to 4.5	0.0	0.0	0.0	30.12	0.3	70.70	--	--
GMP21	11/13/02	3.5 to 4.0	0.0	0.0	0.0	30.12	0.0	68.90	--	--
GMP22	11/13/02	6.0 to 13.5	0.7	0.0	87.9	30.17	0.0	72.40	GMP22003	--
GMP23	11/13/02	6.0 to 13.5	0.9	0.0	134.7	30.17	0.0	66.20	GMP23002	--
GMP24	11/13/02	6.0 to 13.0	2.1	0.0	0.0	30.16	0.0	65.10	GMP24SG001	--
GMP25	11/13/02	6.5 to 11.5	0.6	0.0	0.0	30.16	0.0	64.60	GMP25SG001	--
GMP26	11/13/02	6.0 to 11.0	0.0	0.0	0.0	30.16	0.0	63.30	--	--
IR01MW18A	11/13/02	10.3 to 25.3	59.9	0.0	0.0	30.08	NA	59.40	IR01MW18ASG003	--
IR01MW16A	11/13/02	7.0 to 25.0	46.5	0.0	0.0	30.12	NA	66.70	IR01MW16ASG004	--
IR01MW366A	11/13/02	2.7 to 12.7	9.9	0.0	0.0	30.10	NA	66.00	IR01MW366ASG005	
IR01MWI-5	11/13/02	5.0 to 20.0	71.2	0.0	0.0	30.08	NA	61.00	IR01MWI-5SG003	--

Notes:

-- Not available
bgs Below ground surface
GMP Gas monitoring probe
IR Installation Restoration
MW Monitoring well
NA Not applicable
NR No reading taken
ppm Parts per million
VOC Volatile organic compound

TABLE 9: GAS MONITORING PROBE ANALYTICAL RESULTS

Parcel E Nonstandard Data Gaps Investigation, Landfill Gas Characterization, Hunters Point Shipyard, San Francisco, California

Sample ID:	GMP01SG001	GMP01SG002	GMP01SG003	GMP01SG004	GMP01ASG001	GMP02SG001	GMP02SG002	GMP02SG003	GMP02ASG001	GMP02ASG002
Point Name:	GMP01	GMP01	GMP01	GMP01	GMP01A	GMP02	GMP02	GMP02	GMP02A	GMP02A
Sample Date:	4/22/2002	5/22/2002	5/22/2002	7/31/2002	11/13/2002	4/22/2002	5/22/2002	7/31/2002	11/13/2002	11/13/2002
EPA 25C Total Nonmethane VOCs (ppmv)										
Methane	350,000 J8	NA	NA	NA	NA	610,000 J8	NA	NA	NA	NA
Nonmethane Organic Carbon	39	57	58	26	32	72	110	67	44	48
EPA 3C Landfill Gas (percent)										
Carbon Dioxide	22	26	26	28	12	23	28	29	9	9
Carbon Monoxide	0.1 U	0.2 U	0.2 U	0.2 U	0.1 U	0.1 U	0.2 U	0.2 U	0.1 U	0.1 U
Methane	33	30	28	45	4	58	56	60	2	2
Nitrogen	45	43	45	26	83	17	15	10	88	88
Oxygen	0.1 U	0.9	0.7	0.7	1	2	1	1	2	2
EPA TO-14A VOA (µg/m3)										
1,1,1-Trichloroethane	19 U	9 U	22 U	9 U	8 U	75 U	13 J3	9 U	8 U	8 U
1,1,2,2-Tetrachloroethane	24 U	11 UJ0	28 UJ0	12 U	10 U	95 U	27 UJ0	11 UJ0	70 J3	10 U
1,1,2-Trichloro-1,2,2-Trifluoroethane	26 U	12 U	31 U	13 U	11 U	110 U	30 U2J3	12 U	11 U	11 U
1,1,2-Trichloroethane	19 U	9 U	22 U	9 U	8 U	75 U	22 U	9 U	8 U	8 U
1,1-Dichloroethane	59 J3	41 J3	49 J3	74	22 J3	56 U	26 J3	17	7 J3	7 J3
1,1-Dichloroethene	14 U	6 U	16 U	7 U	6 U	55 U	12 J3	6 U	6 U	6 U
1,2,4-Trichlorobenzene	26 U	12 UJ0	30 UJ0	13 U	11 U	100 U	29 UJ0	12 UJ0	11 U	11 U
1,2,4-Trimethylbenzene	6,700 J3	2,600 J03	1,900 J03	180	7 U	68 U	100 J03	1,600	46 J3	46 J3
1,2-Dibromoethane	27 U	13 U	31 U	13 U	11 U	110 U	13 J3	13 U	11 U	11 U
1,2-Dichloro-1,1,2,2-Tetrafluoroethane	260 J3	71 J3	71 J3	270	64 J3	610 J3	640 J3	1,100	78 J3	78 J3
1,2-Dichlorobenzene	21 U	17 J03	18 J03	20	9 J3	83 U	35 J03	13 J0	16 J3	16 J3
1,2-Dichlroethane	14 J3	20 J3	16 U	11	6 U	56 U	23 J3	12	6 U	6 U
1,2-Dichloropropane	16 U	12 J3	19 U	8 U	7 U	64 U	18 U	8 U	7 U	7 U
1,3,5-Trimethylbenzene	1,700 J3	1,100 J03	800 J03	160	7 U	68 U	60 J03	75	44 J3	44 J3
1,3-Butadiene	8 U	4 U	9 U	4 U	3 U	31 U	9 U	4 U	3 U	3 U
1,3-Dichlorobenzene	21 U	40 J03	51 J03	49	33 J3	83 U	26 J03	9 J0	9 U	9 U
1,4-Dichlorobenzene	21 U	480 J03	530 J03	670	300 J3	83 U	160 J03	140 J0	31 J3	38 J3
1,4-Dioxane	12 U	6 U	15 U	6 U	5 U	50 U	14 U	6 U	5 U	5 U
2-Butanone	10 U	5 U	12 U	5 U	4 U	67 U4J3	12 U	5 U	4 U	4 U
2-Hexanone	14 U	7 U	17 U	7 U	6 U	57 U	16 U	7 U	6 U	6 U
4-Ethyltoluene	1,100 J3	930 J03	660 J03	110	6 U	60 U	29 J03	29 J	6 U	9 J3
4-Methyl-2-Pentanone	14 U	7 U	17 U	7 U	6 U	57 U	16 U	7 U	6 U	6 U
Acetone	8 U	4 U	10 U	14 U4	3 U	33 U	9 U	4 U	3 U	3 U
Benzene	330 J3	550 J3	420 J3	320	13 J3	210 J3	240 J3	190	19 J3	19 J3
Benzyl Chloride	18 U	8 UJ0	21 UJ0	9 U	7 U	72 U	21 UJ0	8 UJ0	7 U	7 U
Bromodichloromethane	23 U	11 U	27 U	12 U	9 U	93 U	26 U	11 U	9 U	9 U
Bromoform	36 U	17 UJ0	42 UJ0	18 U	15 U	140 U	41 UJ0	17 UJ0	15 U	15 U
Bromomethane	13 U	6 U	16 U	7 U	6 U	54 U	10 J3	6 U	6 U	6 U
Carbon Disulfide	19 J3	8 J3	13 U	9 U2	5 U2J3	240 J3	32 J3	14 U2	57 J3	73 J3
Carbon Tetrachloride	22 U	10 U	26 U	11 U	9 U	87 U	11 J3	10 U	9 U	9 U
Chlorobenzene	1,200 J3	2,300 J03	2,000 J03	1,600	120 J3	520 J3	750 J03	940 J0	7 U	7 U
Chloroethane	170 J3	78 J3	70 J3	160	8 J3	200 J3	250 J3	180	14 J3	14 J3
Chloroform	17 U	8 U	20 U	8 U	7 U	68 U	8 J3	8 U	7 U	7 U
Chloromethane	7 U	15 J3	8 U	6 U2	3 U	29 U	8 U	3 U	71 J3	74 J3
cis-1,2-Dichloroethene	24 J3	28 J3	25 J3	40	6 U	36 J3	40 J3	34	6 U	4 J3
cis-1,3-Dichloropropene	16 U	7 U	18 U	8 U	6 U	63 U	18 U	7 U	6 U	6 U

TABLE 9: GAS MONITORING PROBE ANALYTICAL RESULTS (Continued)

Parcel E Nonstandard Data Gaps Investigation, Landfill Gas Characterization, Hunters Point Shipyard, San Francisco, California

Sample ID:	GMP01SG001	GMP01SG002	GMP01SG003	GMP01SG004	GMP01ASG001	GMP02SG001	GMP02SG002	GMP02SG003	GMP02ASG001	GMP02ASG002
Point Name:	GMP01	GMP01	GMP01	GMP01	GMP01A	GMP02	GMP02	GMP02	GMP02A	GMP02A
Sample Date:	4/22/2002	5/22/2002	5/22/2002	7/31/2002	11/13/2002	4/22/2002	5/22/2002	7/31/2002	11/13/2002	11/13/2002
EPA TO-14A VOCs (µg/r ^{3}) (Continued										
Cyclohexane	1,800 J3	2,200 J38	2,100 J3	980	63 J3	2,700 J3	2,800 J3	1,400	180 J3	180 J3
Dibromochloromethane	29 U	14 U	35 U	15 U	12 U	120 U	34 U	14 U	12 U	12 U
Dichlorodifluoromethane	500 J3	120 J3	170 J3	4,200 J8	290 J3	610 J3	600 J3	1,500	220 J3	220 J3
Ethanol	64 U2J3	3 U	8 U	3 U	3 U	260 J3	7 U	3 U	3 U	3 U
Ethylbenzene	150 J3	880 J03	570 J03	75	14 J3	41 J3	57 J03	29 J0	11 J3	13 J3
Heptane	1,600 J3	2,600 J3	2,100 J3	870	54 J3	3,000 J3	3,100 J3	2,100	210 J3	220 J3
Hexachlorobutadiene	37 U	17 UJ0	43 UJ0	18 U	15 U	150 U	38 J03	17 UJ0	15 U	15 U
Hexane	1,700 J3	2,200 J3	2,000 J3	1,500	180 J3	3,100 J3	2,900 J3	2,600	320 J3	340 J3
Isopropyl Alcohol	8 U	4 U	10 U	45	3 U	67 J3	10 U	4 U	3 U	3 U
m,p-Xylenes	580 J3	480 J03	310 J03	48 U2	14 J3	100 J3	180 J03	70 U	53 J3	57 J3
Methylene Chloride	32 U4J3	11 U4J3	14 U4J3	16 U4	11 U4J3	100 U4J3	28 U4J3	53	7 U4J3	23 U4J3
o-Xylene	86 J3	130 J03	97 J03	25	14 J3	41 J3	70 J03	43	48 J3	53 J3
Propylene	2,300 J3	560 J3	580 J3	980	300 J3	4,200 J3	3,200 J38	1,100	3,300	2,500
Styrene	15 U	10 J03	17 UJ0	7 U	6 U	59 U	17 UJ0	7 UJ0	6 U	6 U
Tert-Butyl Methyl Ether	12 U	6 U	15 U	6 U	5 U	50 U	14 U	6 U	5 U	5 U
Tetrachloroethene	24 U	21 J3	17 J3	10 J	14 J3	94 U	21 J3	6 J	19 J3	21 J3
Tetrahydrofuran	24 J3	5 U	12 U	23	4 U	41 U	12 U	5 U	4 U	4 U
Toluene	470 J3	210 J3	130 J3	73 U2	18 J3	36 J3	34 U2J3	29 U2	8 U2J3	10 U2J3
trans-1,2-Dichloroethene	40 J3	44 J3	40 J3	80	6 U	54 U	18 J3	12	6 U	6 U
trans-1,3-Dichloropropene	16 U	7 U	18 U	8 U	6 U	63 U	18 U	7 U	6 U	6 U
Trichloroethene	19 U	29 J3	23 J3	21	7 J3	75 U	22 J3	11	7 J3	8 J3
Trichlorofluoromethane	19 U	9 U	23 U	10 U	8 U	78 U	14 J3	9 U	8 U	8 U
Vinyl Acetate	12 U	6 U	14 U	6 U	5 U	49 U	14 U	6 U	5 U	5 U
Vinyl Chloride	190 J3	68 J3	55 J3	180	15 J3	39 J3	47 J3	31	4 J3	4 J3
Total VOCs	21,016	17,842	14,786	12,653	1,552	16,010	15,545	13,224	4,825	4,038

TABLE 9: GAS MONITORING PROBE ANALYTICAL RESULTS (Continued)

Parcel E Nonstandard Data Gaps Investigation, Landfill Gas Characterization, Hunters Point Shipyard, San Francisco, California

Sample ID:	GMP03SG001	GMP03SG002	GMP03SG003	GMP03SG004	GMP04SG001	GMP04SG002	GMP04SG003	GMP04ASG001	GMP04ASG002	GMP05SG001
Point Name:	GMP03	GMP03	GMP03	GMP03	GMP04	GMP04	GMP04	GMP04A	GMP04A	GMP05
Sample Date:	4/22/2002	5/22/2002	5/22/2002	7/31/2002	4/22/2002	5/22/2002	7/31/2002	11/13/2002	11/13/2002	4/22/2002
EPA 25C Total Nonmethane VOCs (ppmv)										
Methane	670,000 J8	NA	NA	NA	650,000 J8	NA	NA	940	950	540,000 J8
Nonmethane Organic Carbon	94	140	140	120	200	230	130	8	2	210
EPA 3C Landfill Gas (percent)										
Carbon Dioxide	24	28	28	30	23	26	28	11	11	18
Carbon Monoxide	0.1 U	0.2 U	0.2 U	0.2 U	0.1 U	0.2 U	0.2 U	0.1 U	0.1 U	0.1 U
Methane	64	60	61	64	62	52	46	0.1 J	0.1 U	51
Nitrogen	11	11	10	6	13	19	25	88	87	29
Oxygen	1	1	0.7	0.3	1	2	0.5	1	2	2
EPA TO-14A VOA (µg/m3)										
1,1,1-Trichloroethane	75 U	30 J3	52 J3	9 U	76 U	44 U2J3	9 U	7 U	8 U	80 U
1,1,2,2-Tetrachloroethane	95 U	54 U	56 U	12 U	96 U	56 U	11 U	9 U	10 U	100 U
1,1,2-Trichloro-1,2,2-Trifluoroethane	110 U	65 U2J3	85 U2J3	13 U	110 U	62 U2J3	12 U	10 U	11 U	110 U
1,1,2-Trichloroethane	75 U	43 U	44 U	9 U	76 U	44 U	9 U	7 U	8 U	80 U
1,1-Dichloroethane	26 J3	41 J3	58 J3	22	57 U	45 J3	26	8	7	120
1,1-Dichloroethene	55 U	28 J3	44 J3	7 U	55 U	21 J3	6 U	5 U	6 U	58 U
1,2,4-Trichlorobenzene	100 U	34 J3	40 J3	13 U	100 U	60 U	12 U	10 U	11 U	110 U
1,2,4-Trimethylbenzene	68 U	100 J3	110 J3	33 U2	69 U	40 J3	36	4 J	7 U	72 U
1,2-Dibromoethane	110 U	34 J3	51 J3	13 U	110 U	24 J3	13 U	10 U	11 U	110 U
1,2-Dichloro-1,1,2,2-Tetrafluoroethane	740 J3	780 J3	850 J3	520	1,700	1,500 J3	640	200	210	910
1,2-Dichlorobenzene	83 U	51 J3	60 J3	10	84 U	36 J3	21	11	12	88 U
1,2-Dichlroethane	16 J3	23 J3	45 J3	7 U	57 U	14 J3	6 J	5 U	6 U	59 U
1,2-Dichloropropane	64 U	37 U	38 U	8 U	65 U	38 U	8 U	6 U	7 U	68 U
1,3,5-Trimethylbenzene	68 U	90 J3	110 J3	32	69 U	28 J3	15	6 U	7 U	72 U
1,3-Butadiene	31 U	17 U	18 U	4 U	31 U	18 U	4 U	3 U	3 U	32 U
1,3-Dichlorobenzene	83 U	42 J3	54 J3	9 J	84 U	23 J3	8 J	8 U	9 U	88 U
1,4-Dichlorobenzene	83 U	170 J3	180 J3	130	84 U	130 J3	220	120	120	88 U
1,4-Dioxane	50 U	29 U	29 U	6 U	50 U	29 U	6 U	5 U	5 U	53 U
2-Butanone	41 U	23 U	24 U	5 U	42 U4	24 U	5 U	4 U	4 U	43 U
2-Hexanone	57 U	32 U	33 U	7 U	57 U	33 U	7 U	5 U	6 U	60 U
4-Ethyltoluene	60 U	37 J3	49 J3	9	61 U	23 J3	12	6 U	6 U	64 U
4-Methyl-2-Pentanone	57 U	32 U	33 U	7 U	57 U	33 U	7 U	5 U	6 U	60 U
Acetone	33 U	19 U	19 U	4 U	33 U	19 U	4 U	3 U	3 U	35 U
Benzene	350 J3	310 J3	330 J3	160	330	330 J3	220	7	7	43 J
Benzyl Chloride	72 U	41 U	42 U	9 U	73 U	42 U	8 U	7 U	7 U	76 U
Bromodichloromethane	93 U	53 U	54 U	12 U	93 U	54 U	11 U	9 U	9 U	98 U
Bromoform	140 U	82 U	84 U	18 U	140 U	84 U	17 U	14 U	15 U	150 U
Bromomethane	54 U	25 J3	43 J3	7 U	54 U	18 J3	6 U	5 U	6 U	57 U
Carbon Disulfide	82 J3	38 J3	47 J3	5 U2	150	44 J3	11 U2	31	6 U2	76
Carbon Tetrachloride	87 U	28 J3	45 J3	11 U	88 U	20 J3	10 U	8 U	9 U	92 U
Chlorobenzene	1,400 J3	1,400 J3	1,400 J3	1,400	300	300 J3	370	6 U	7 U	68 U
Chloroethane	140 J3	170 J3	190 J3	110	150	150 J3	67	3 U	4 U	4,300
Chloroform	68 U	27 J3	39 J3	8 U	68 U	15 J3	8 U	6 U	7 U	71 U
Chloromethane	29 U	16 U	25 J3	4 U	29 U	17 U	3 U	3 U2	3 U	30 U
cis-1,2-Dichloroethene	35 J3	52 J3	60 J3	39	60	68 J3	52	5 U	6 U	30 J
cis-1,3-Dichloropropene	63 U	18 J3	28 J3	8 U	63 U	12 J3	7 U	6 U	6 U	67 U

TABLE 9: GAS MONITORING PROBE ANALYTICAL RESULTS (Continued)

Parcel E Nonstandard Data Gaps Investigation, Landfill Gas Characterization, Hunters Point Shipyard, San Francisco, California

Sample ID:	GMP03SG001	GMP03SG002	GMP03SG003	GMP03SG004	GMP04SG001	GMP04SG002	GMP04SG003	GMP04ASG001	GMP04ASG002	GMP05SG001
Point Name:	GMP03	GMP03	GMP03	GMP03	GMP04	GMP04	GMP04	GMP04A	GMP04A	GMP05
Sample Date:	4/22/2002	5/22/2002	5/22/2002	7/31/2002	4/22/2002	5/22/2002	7/31/2002	11/13/2002	11/13/2002	4/22/2002
EPA TO-14A VOCs (µg/r ^{3}) (Continued										
Cyclohexane	3,000 J3	3,000 J3	3,100 J3	910	2,500	1,700 J3	700	38	42	2,500
Dibromochloromethane	120 U	67 U	69 U	15 U	120 U	26 J3	14 U	11 U	12 U	120 U
Dichlorodifluoromethane	2,800 J3	1,700 J3	1,700 J3	160	170	210 J3	91	240	230	600
Ethanol	1,700 J3	15 U	15 U	3 U	26 U	15 U	3 U	9,900	3 U	81
Ethylbenzene	34 J3	44 J3	53 J3	16 U2	30 J	42 J3	17 U2	7	5 J	64 U
Heptane	3,300 J3	3,200 J3	3,200 J3	1,700	2,200	1,700 J3	920	26	30	1,300
Hexachlorobutadiene	150 U	76 J3	98 J3	18 U	150 U	47 J3	17 U	14 U	15 U	160 U
Hexane	3,400 J3	2,900 J3	2,900 J3	3,000 J8	1,700	1,400 J3	1,100	39	36	1,900
Isopropyl Alcohol	470 J3	19 U	20 U	4 U	120	20 U	6	220	3 U	36 U
m,p-Xylenes	76 J3	100 J3	130 J3	20 U2	90	84 J3	33 U2	12	12	39 J
Methylene Chloride	120 U4J3	53 U4J3	64 U4J3	24 U4	120 U4	49 U4J3	110	11 U4	16 U4	120 U4
o-Xylene	36 J3	48 J3	57 J3	15 U2	42 J	53 J3	29	8	7	18 J
Propylene	5,400 J3	4,700 J3	4,600 J3	420	4,500	3,000 J3	250	81	93	2,100
Styrene	59 U	34 U	35 U	7 U	59 U	35 U	7 U	6 U	6 U	62 U
Tert-Butyl Methyl Ether	50 U	29 U	29 U	6 U	50 U	29 U	6 U	5 U	5 U	53 U
Tetrachloroethene	94 U	44 J3	59 J3	8 J	37 J	66 J3	30	37	37	100 U
Tetrahydrofuran	41 U	23 U	24 U	5 U	41 U	24 U	5 U	4 U	4 U	43 U
Toluene	54 U2J3	30 U2J3	38 U2J3	7 U2	38 J	32 U2J3	31 U2	5 U2	5 U2	54 U2
trans-1,2-Dichloroethene	14 J3	37 J3	48 J3	19	55 U	27 J3	8	5 U	6 U	15 J
trans-1,3-Dichloropropene	63 U	14 J3	22 J3	8 U	63 U	10 J3	7 U	6 U	6 U	67 U
Trichloroethene	75 U	45 J3	66 J3	19	60 J	77 J3	52	21	22	25 J
Trichlorofluoromethane	78 U	37 J3	56 J3	10 U	80 U2	39 J3	6 J	97	91	82 U
Vinyl Acetate	49 U	28 U	29 U	6 U	49 U	29 U	6 U	5 U	5 U	52 U
Vinyl Chloride	170 J3	180 J3	190 J3	88	120	140 J3	55	3 U	4 U	220
Total VOCs	23,189	19,653	20,189	8,765	14,297	11,462	5,044	11,107	961	14,277

TABLE 9: GAS MONITORING PROBE ANALYTICAL RESULTS (Continued)

Parcel E Nonstandard Data Gaps Investigation, Landfill Gas Characterization, Hunters Point Shipyard, San Francisco, California

Sample ID:	GMP05SG002	GMP05SG003	GMP06SG001	GMP06SG002	GMP06SG003	GMP07SG001	GMP07SG002	GMP07SG003	GMP07SG004	GMP07ASG001	GMP08SG001
Point Name:	GMP05	GMP05	GMP06	GMP06	GMP06	GMP07	GMP07	GMP07	GMP07	GMP07A	GMP08
Sample Date:	5/22/2002	7/31/2002	4/22/2002	5/22/2002	7/31/2002	4/22/2002	4/22/2002	5/22/2002	7/31/2002	11/13/2002	4/22/2002
EPA 25C Total Nonmethane VOCs (ppmv)											
Methane	NA	NA	730,000 J8	NA	NA	600,000 J8	670,000 J8	NA	NA	420	670,000 J8
Nonmethane Organic Carbon	160	210	300	320	210	120	130	140	53	14	210
EPA 3C Landfill Gas (percent)											
Carbon Dioxide	18	29	19	22	22	13	14	17	18	8	7
Carbon Monoxide	0.2 U	0.2 U	0.1 U	0.2 U	0.2 U	0.1 U	0.1 U	0.2 U	0.2 U	0.1 U	0.1 U
Methane	30	41	69	61	49	57	64	51	36	0.1 U	64
Nitrogen	52	30	10	17	28	26	19	31	46	88	25
Oxygen	0.2 U	0.6	0.7	0.5	0.5	5	3	0.7	0.5	3	3
EPA TO-14A VOA (µg/m3)											
1,1,1-Trichloroethane	27 J3	9 U	20 U	46 J3	10 U	20 U	39 U	25 J3	9 U	7 U	27 J3
1,1,2,2-Tetrachloroethane	57 U	12 U	25 U	57 U	13 U	25 U	50 U	57 U	11 U	9 U	99 U
1,1,2-Trichloro-1,2,2-Trifluoroethane	64 U2J3	13 U	28 U	85 U2J3	14 U	27 U	55 U	63 U2J3	12 U	10 U	110 U
1,1,2-Trichloroethane	45 U	9 U	20 U	45 U	10 U	20 U	39 U	45 U	9 U	7 U	78 U
1,1-Dichloroethane	120 J3	200	24 J3	62 J3	35	13 J	29 U	32 J3	18	5 U	58 U
1,1-Dichloroethene	25 J3	7 U	15 U	34 J3	7 U	14 U	29 U	17 J3	6 U	5 U	57 U
1,2,4-Trichlorobenzene	39 J3	13 U	27 U	62 U	14 U	27 U	49 J3	31 J3	12 U	10 U	110 U
1,2,4-Trimethylbenzene	25 J3	44	11 J3	40 J3	36	9 J	30 J3	20 J3	200	6 U	15,000 J3
1,2-Dibromoethane	37 J3	13 U	28 U	48 J3	14 U	28 U	56 U	25 J3	13 U	10 U	110 U
1,2-Dichloro-1,1,2,2-Tetrafluoroethane	540 J3	520	930 J3	1,400 J3	920	1,200	1,300 J3	1,400 J3	1,100	120	1,100 J3
1,2-Dichlorobenzene	37 J3	10 U	22 U	50 U	11 U	22 U	19 J3	49 U	10 U	8 U	86 U
1,2-Dichlroethane	23 J3	4 J	15 U	34 U	7 U	15 U	29 U	19 J3	7 U	5 U	58 U
1,2-Dichloropropane	39 U	8 U	17 U	39 U	8 U	17 U	34 U	38 U	8 U	6 U	66 U
1,3,5-Trimethylbenzene	23 J3	13	8 J3	41 J3	12	18 U	36 U	24 J3	65	6 U	5,800 J3
1,3-Butadiene	18 U	4 U	8 U	18 U	4 U	8 U	16 U	18 U	4 U	3 U	32 U
1,3-Dichlorobenzene	32 J3	10 U	22 U	50 U	11 U	22 U	44 U	49 U	10 U	8 U	86 U
1,4-Dichlorobenzene	38 J3	10 J	22 U	50 U	11 U	22 U	44 U	49 U	10 U	8 U	86 U
1,4-Dioxane	30 U	6 U	13 U	30 U	7 U	13 U	11 J3	30 U	6 U	5 U	52 U
2-Butanone	25 U	5 U	11 U	25 U	5 U	20 U4	21 U4J3	24 U	5 U	4 U	42 U
2-Hexanone	34 U	7 U	15 U	34 U	7 U	15 U	30 U	34 U	7 U	5 U	59 U
4-Ethyltoluene	19 J3	6 J	16 U	26 J3	8 U	16 U	14 J3	19 J3	21	6 U	2,200 J3
4-Methyl-2-Pentanone	34 U	7 U	15 U	34 U	7 U	15 U	30 U	34 U	7 U	5 U	59 U
Acetone	20 U	4 U	9 U	20 U	11 U4	9 U	17 U	20 U	13 U4	3 U	34 U
Benzene	30 J3	32	17 J3	36 J3	8	7 J	10 J3	14 J3	3 J	4 U	240 J3
Benzyl Chloride	43 U	9 U	19 U	43 U	10 U	19 U	38 U	43 U	8 U	7 U	75 U
Bromodichloromethane	56 U	12 U	24 U	56 U	12 U	24 U	48 U	34 J3	11 U	9 U	96 U
Bromoform	86 U	18 U	38 U	81 J3	19 U	37 U	75 U	34 J3	17 U	14 U	150 U
Bromomethane	17 J3	7 U	14 U	32 J3	7 U	14 U	28 U	19 J3	6 U	5 U	56 U
Carbon Disulfide	700 J3	9 U2	7 J3	32 J3	9 U2	12 U	11 J3	24 J3	11 U2	35	18 J3
Carbon Tetrachloride	25 J3	11 U	23 U	42 J3	12 U	23 U	46 U	22 J3	10 U	8 U	90 U
Chlorobenzene	39 U	8 U	17 U	39 U	8 U	17 U	34 U	38 U	8 U	6 U	66 U
Chloroethane	3,200 J3	4,000 J8	20 J3	56 J3	18	6 J	19 U	21 J3	7	3 U	5,500 J3
Chloroform	41 U	8 U	18 U	33 J3	9 U	17 U	35 U	18 J3	8 U	6 U	70 U
Chloromethane	17 U	90	8 U	17 U	4 U	7 U	15 U	17 U	3 U	3 U	30 U
cis-1,2-Dichloroethene	32 J3	68	20 J3	44 J3	22	14 U	28 U	18 J3	5 J	5 U	29 J3
cis-1,3-Dichloropropene	19 J3	8 U	17 U	25 J3	8 U	16 U	33 U	14 J3	7 U	6 U	65 U

TABLE 9: GAS MONITORING PROBE ANALYTICAL RESULTS (Continued)

Parcel E Nonstandard Data Gaps Investigation, Landfill Gas Characterization, Hunters Point Shipyard, San Francisco, California

Sample ID:	GMP05SG002	GMP05SG003	GMP06SG001	GMP06SG002	GMP06SG003	GMP07SG001	GMP07SG002	GMP07SG003	GMP07SG004	GMP07ASG001	GMP08SG001
Point Name:	GMP05	GMP05	GMP06	GMP06	GMP06	GMP07	GMP07	GMP07	GMP07	GMP07A	GMP08
Sample Date:	5/22/2002	7/31/2002	4/22/2002	5/22/2002	7/31/2002	4/22/2002	4/22/2002	5/22/2002	7/31/2002	11/13/2002	4/22/2002
EPA TO-14A VOCs (µg/r ^{3}) (Continued											
Cyclohexane	1,500 J3	250	990 J3	1,100 J3	660	500	640 J3	520 J3	420	5	3,100 J3
Dibromochloromethane	41 J3	15 U	31 U	54 J3	16 U	31 U	62 U	30 J3	14 U	11 U	120 U
Dichlorodifluoromethane	390 J3	130	150 J3	220 J3	110	480	550 J3	750 J3	330	110	70 U2J3
Ethanol	16 U	3 U	16 U2J3	16 U	3 U	24 U2	14 U	15 U	3 U	2 U	130 J3
Ethylbenzene	24 J3	7 U2	7 J3	34 J3	8 U	6 J	31 U	18 J3	7 U2	6 U	200 J3
Heptane	830 J3	130	230 J3	310 J3	280	65	110 J3	67 J3	62	13	1,200 J3
Hexachlorobutadiene	86 J3	18 U	42 J3	98 J3	20 U	38 U	51 J3	54 J3	17 U	14 U	72 J3
Hexane	1,100 J3	1,100	1,200 J3	1,100 J3	1,100	360	460 J3	360 J3	460	50	8,400 J3
Isopropyl Alcohol	20 U	4 U	9 U	20 U	4 U	9 U	18 U	20 U	32	3 U	35 U
m,p-Xylenes	48 U2J3	15 U2	14 J3	66 J3	9 U2	12 J	20 J3	39 U2J3	15 U2	6 U	960 J3
Methylene Chloride	42 U4J3	46	27 U4J3	56 U4J3	11 U4	30 U4	63 U4J3	33 U4J3	10 U4	7 U4	110 U4J3
o-Xylene	24 J3	9 U2	9 J3	35 J3	8 U2	7 J	31 U	17 J3	8 U2	6 U	770 J3
Propylene	1,800 J3	3 U	410 J3	560 J3	3 U	150 U2	170 U2J3	100 J3	3 U	130	2,400 J3
Styrene	35 U	7 U	16 U	35 U	8 U	15 U	31 U	35 U	7 U	6 U	61 U
Tert-Butyl Methyl Ether	30 U	6 U	13 U	30 U	7 U	13 U	26 U	30 U	6 U	5 U	52 U
Tetrachloroethene	39 J3	10 J	25 U	52 J3	12 U	24 U	49 U	30 J3	11 U	9 U	97 U
Tetrahydrofuran	25 U	5 U	11 U	25 U	5 U	11 U	21 U	24 U	5 U	4 U	42 U
Toluene	31 U2J3	7 U2	14 U2J3	34 U2J3	7 U	13 U2	27 U2J3	31 U2J3	7 U2	5 U2	67 J3
trans-1,2-Dichloroethene	26 J3	25	14 U	32 J3	6 J	14 U	28 U	16 J3	6 U	5 U	56 U
trans-1,3-Dichloropropene	38 U	8 U	17 U	24 J3	8 U	16 U	33 U	12 J3	7 U	6 U	65 U
Trichloroethene	41 J3	27	15 J3	48 J3	9 J	20 U	39 U	23 J3	9 U	7 U	39 J3
Trichlorofluoromethane	29 J3	10 U	21 U	49 J3	10 U	20 U	41 U	27 J3	9 U	5 J	81 U
Vinyl Acetate	29 U	6 U	13 U	29 U	6 U	13 U	25 U	29 U	6 U	5 U	50 U
Vinyl Chloride	140 J3	160	24 J3	52 J3	23	13 U	11 J3	20 J3	6	3 U	130 J3
Total VOCs	11,078	6,861	4,128	5,912	3,239	2,665	3,286	3,874	2,729	468	46,182

TABLE 9: GAS MONITORING PROBE ANALYTICAL RESULTS (Continued)

Parcel E Nonstandard Data Gaps Investigation, Landfill Gas Characterization, Hunters Point Shipyard, San Francisco, California

Sample ID:	GMP08SG002	GMP08SG003	GMP08ASG001	GMP11SG001	GMP11SG002	GMP11SG003	GMP11SG004	GMP12SG001	GMP12SG002
Point Name:	GMP08	GMP08	GMP08A	GMP11	GMP11	GMP11	GMP11	GMP12	GMP12
Sample Date:	5/22/2002	7/31/2002	11/13/2002	4/22/2002	5/22/2002	7/31/2002	7/31/2002	4/22/2002	4/22/2002
EPA 25C Total Nonmethane VOCs (ppmv)									
Methane	NA	NA	NA	580,000 J8	NA	NA	NA	540,000 J8	470,000 J8
Nonmethane Organic Carbon	330	150	36	76	32	21	50	31	41
EPA 3C Landfill Gas (percent)									
Carbon Dioxide	10	11	6	12 J	19	22	22	19	16
Carbon Monoxide	0.2 U	0.2 U	0.1 U	0.2 UJ	0.2 U	0.2 U	0.2 U	0.1 U	0.1 U
Methane	71	69	7	53 J	65	57	57	52	44
Nitrogen	17	19	87	29 J	15	20	20	24	33
Oxygen	0.4	0.5	1	5 J	0.5	0.5	0.5	5	7
EPA TO-14A VOA (µg/m3)									
1,1,1-Trichloroethane	22 J3	14	8 U	26 U	9 U	9 U	9 U	19 U	19 U
1,1,2,2-Tetrachloroethane	57 U	13 U	10 U	33 U	11 U	12 U	12 U	24 U	24 U
1,1,2-Trichloro-1,2,2-Trifluoroethane	63 U2J3	15 U	11 U	36 U	12 U	13 U	13 U	27 U	27 U
1,1,2-Trichloroethane	45 U	11 U	8 U	26 U	9 U	9 U	9 UJ0	19 U	19 U
1,1-Dichloroethane	290 J3	410	6 U	19 U	19 J3	8	10	14 U	14 J3
1,1-Dichloroethene	14 J3	4 J	6 U	19 U	6 U	7 U	7 U	14 U	14 U
1,2,4-Trichlorobenzene	35 J3	14 U	11 U	35 U	12 U	13 U	13 U	26 U	26 U
1,2,4-Trimethylbenzene	13,000 J3	17,000	22 J3	28 J3	8 U	28 U2	20 U2	18 U	17 U
1,2-Dibromoethane	14 J3	15 U	11 U	37 U	13 U	13 U	13 UJ0	27 U	27 U
1,2-Dichloro-1,1,2,2-Tetrafluoroethane	1,400 J3	1,100	250 J3	300 J3	430 J3	260	310	300 J3	280 J3
1,2-Dichlorobenzene	49 U	12 U	9 U	29 U	10 U	10 U	10 U	21 U	21 U
1,2-Dichlroethane	62 J3	8 U	6 U	19 U	7 U	7 U	7 U	14 U	14 U
1,2-Dichloropropane	38 U	9 U	7 U	22 U	8 U	8 U	8 UJ0	16 U	16 U
1,3,5-Trimethylbenzene	6,000 J3	9,000	4 J3	23 U	8 U	8 J	7 J	18 U	17 U
1,3-Butadiene	18 U	4 U	3 U	10 U	4 U	4 U	4 U	8 U	8 U
1,3-Dichlorobenzene	49 U	12 U	9 U	29 U	10 U	10 U	10 U	21 U	21 U
1,4-Dichlorobenzene	49 U	12 U	9 U	29 U	10 U	6 J	10 U	690 J3	21 U
1,4-Dioxane	30 U	7 U	5 U	17 U	6 U	6 U	6 UJ0	13 U	13 U
2-Butanone	24 U	6 U	4 U	14 U	5 U	5 U	5 U	30 U4J3	24 U4J3
2-Hexanone	34 U	8 U	6 U	19 U	7 U	7 U	7 UJ0	15 U	14 U
4-Ethyltoluene	2,500 J3	1,300	3 J3	21 U	7 U	7 U	7 U	15 U	15 U
4-Methyl-2-Pentanone	34 U	8 U	6 U	19 U	7 U	7 U	7 UJ0	15 U	14 U
Acetone	20 U	5 U	3 U	11 U	4 U	4 U	16 U4	8 U	8 U
Benzene	230 J3	320	5 U	17 J3	14 J3	3 J	8 J0	200 J3	170 J3
Benzyl Chloride	43 U	10 U	7 U	25 U	8 U	9 U	9 U	19 U	18 U
Bromodichloromethane	55 U	13 U	9 U	32 U	11 U	12 U	12 UJ0	24 U	23 U
Bromoform	85 U	20 U	15 U	49 U	17 U	18 U	18 U	37 U	36 U
Bromomethane	11 J3	8 U	6 U	18 U	6 U	7 U	7 U	14 U	14 U
Carbon Disulfide	18 J3	7 U2	5 U2J3	15 U	10 J3	7 U2	5 U2	57 J3	48 J3
Carbon Tetrachloride	13 J3	12 U	9 U	30 U	10 U	11 U	11 UJ0	22 U	22 U
Chlorobenzene	38 U	9 U	7 U	400 J3	190 J3	8 U	8 U	530 J3	16 U
Chloroethane	6,700 J3	7,200	480 J3	16 J3	32 J3	16	20	73 J3	63 J3
Chloroform	11 J3	9 U	7 U	23 U	8 U	8 U	8 U	17 U	17 U
Chloromethane	17 U	4 U	3 U	10 U	3 U	4 U	4 U	7 U	7 U
cis-1,2-Dichloroethene	26 J3	32	6 U	19 U	21 J3	12	14	15 J3	14 U
cis-1,3-Dichloropropene	37 U	9 U	6 U	22 U	7 U	8 U	8 UJ0	16 U	16 U

TABLE 9: GAS MONITORING PROBE ANALYTICAL RESULTS (Continued)

Parcel E Nonstandard Data Gaps Investigation, Landfill Gas Characterization, Hunters Point Shipyard, San Francisco, California

Sample ID:	GMP08SG002	GMP08SG003	GMP08ASG001	GMP11SG001	GMP11SG002	GMP11SG003	GMP11SG004	GMP12SG001	GMP12SG002
Point Name:	GMP08	GMP08	GMP08A	GMP11	GMP11	GMP11	GMP11	GMP12	GMP12
Sample Date:	5/22/2002	7/31/2002	11/13/2002	4/22/2002	5/22/2002	7/31/2002	7/31/2002	4/22/2002	4/22/2002
EPA TO-14A VOCs (µg/r ^{3}) (Continued									
Cyclohexane	3,500 J3	3,800	490 J3	980 J3	1,300 J3	660	910 J0	1,600 J3	1,500 J3
Dibromochloromethane	19 J3	16 U	12 U	40 U	14 U	15 U	15 UJ0	30 U	30 U
Dichlorodifluoromethane	38 J3	20 U2	19 U2J3	48 U2J3	65 J3	50	50	350 J3	310 J3
Ethanol	15 U	4 U	3 U	9 U	3 U	12 U2	3 U	270 J3	210 J3
Ethylbenzene	210 J3	240	4 J3	21 U	20 J3	7 U2	7 U2	34 J3	32 J3
Heptane	1,300 J3	1,100	14 J3	200 J3	200 J3	120	350 J0	920 J3	810 J3
Hexachlorobutadiene	41 J3	21 U	15 U	91 J3	17 U	18 U	18 U	38 U	37 U
Hexane	7,500 J3	15,000	1,400 J3	920 J3	1,100 J3	750	790	2,000 J3	1,700 J3
Isopropyl Alcohol	20 U	72	3 U	12 U	4 U	4 U	4 U	66 J3	77 J3
m,p-Xylenes	1,100 J3	1,300	6 J3	46 J3	31 U2J3	12 U2	11 U2	43 J3	39 J3
Methylene Chloride	34 U4J3	16 U4	12 U4J3	48 U4J3	15 U4J3	120	9 U4	31 U4J3	48 U4J3
o-Xylene	970 J3	750	8 J3	21 J3	18 J3	7 U2	7 U2	47 J3	37 J3
Propylene	2,600 J3	3,000	5 U2J3	250 J3	61 J3	42	40	1,200 J3	1,100 J3
Styrene	35 U	8 U	6 U	20 U	7 U	7 U	7 U	15 U	15 U
Tert-Butyl Methyl Ether	30 U	7 U	5 U	17 U	6 U	6 U	6 U	13 U	13 U
Tetrachloroethene	19 J3	13 U	10 U	32 U	11 U	12 U	12 UJ0	24 U	24 U
Tetrahydrofuran	24 U	6 U	4 U	14 U	5 U	5 U	5 U	10 U	10 U
Toluene	61 U2J3	50 U2	5 U2J3	19 U2J3	6 U	24 U2	9 U2	13 U	18 U2J3
trans-1,2-Dichloroethene	18 J3	19	6 U	19 U	6 U	7 U	7 U	14 U	14 U
trans-1,3-Dichloropropene	37 U	9 U	6 U	22 U	7 U	8 U	8 UJ0	16 U	16 U
Trichloroethene	18 J3	9 J	8 U	26 U	9 U	9 U	9 UJ0	19 U	19 U
Trichlorofluoromethane	17 J3	11 U	8 U	27 U	9 U	10 U	10 U	20 U	20 U
Vinyl Acetate	29 U	7 U	5 U	17 U	6 U	6 U	6 U	13 U	12 U
Vinyl Chloride	150 J3	150	4 U	12 U	20 J3	8	9	20 J3	18 J3
Total VOCs	47,846	61,820	2,681	3,269	3,500	2,063	2,518	8,415	6,408

TABLE 9: GAS MONITORING PROBE ANALYTICAL RESULTS (Continued)

Parcel E Nonstandard Data Gaps Investigation, Landfill Gas Characterization, Hunters Point Shipyard, San Francisco, California

Sample ID:	GMP12SG003	GMP12SG004	GMP12SG005	GMP13SG001	GMP14SG001	GMP15SG001	GMP16SG001	GMP16SG002	GMP17SG001	GMP18SG001
Point Name:	GMP12	GMP12	GMP12	GMP13	GMP14	GMP15	GMP16	GMP16	GMP17	GMP18
Sample Date:	5/22/2002	7/31/2002	11/13/2002	6/5/2002	6/5/2002	6/5/2002	6/5/2002	6/5/2002	6/5/2002	6/5/2002
EPA 25C Total Nonmethane VOCs (ppmv)										
Methane	NA	NA	NA	1 U2	0.4 U2	0.5 U2	0.7 U2	0.9 U2	0.5 U2	0.7 U2
Nonmethane Organic Carbon	83	28	50	0.2 U	0.2 U	0.2 U	0.2 U	0.2 U	0.2 U	0.2 U
EPA 3C Landfill Gas (percent)										
Carbon Dioxide	27	27	12	0.6	0.3	3	0.3	0.3	0.4	0.3
Carbon Monoxide	0.2 U	0.2 U	0.1 U	0.2 U	0.2 U	0.2 U	0.2 U	0.2 U	0.2 U	0.2 U
Methane	60	56	2	0.2 U	0.2 U	0.2 U	0.2 U	0.2 U	0.2 U	0.2 U
Nitrogen	13	16	84	82	81	81	80	80	81	80
Oxygen	0.6	1	2	18	18	16	20	18	18	19
EPA TO-14A VOA (µg/m3)										
1,1,1-Trichloroethane	9 U	9 U	8 U	5 U	5 U	5 U	5 U	5 U	5 U	5 U
1,1,2,2-Tetrachloroethane	11 UJ0	12 U	10 U	6 U	6 U	6 U	6 U	6 U	6 U	6 U
1,1,2-Trichloro-1,2,2-Trifluoroethane	12 U	13 U	11 U	7 U	6 U	6 U	6 U	6 U	6 U	7 U
1,1,2-Trichloroethane	9 U	9 U	8 U	5 U	5 U	5 U	5 U	5 U	5 U	5 U
1,1-Dichloroethane	20 J3	7 U	9 J3	4 U	3 U	3 U	3 U	3 U	3 U	3 U
1,1-Dichloroethene	6 U	7 U	6 U	4 U	3 U	3 U	3 U	3 U	3 U	3 U
1,2,4-Trichlorobenzene	12 UJ0	13 U	11 U	7 U	6 U	6 U	6 U	6 U	6 U	6 U
1,2,4-Trimethylbenzene	19 J03	90	7 U	4 U	39	7	12	22	4 U	4 U
1,2-Dibromoethane	13 U	13 U	11 U	7 U	6 U	6 U	6 U	6 U	6 U	7 U
1,2-Dichloro-1,1,2,2-Tetrafluoroethane	260 J3	330	85 J3	6 U	6 U	6 U	6 U	6 U	6 U	6 U
1,2-Dichlorobenzene	10 UJ0	6 J	4 J3	5 U	5 U	5 U	5 U	5 U	5 U	5 U
1,2-Dichlroethane	10 J3	7 U	6 U	4 U	3 U	3 U	3 U	3 U	3 U	3 U
1,2-Dichloropropane	8 U	8 U	7 U	4 U	4 U	4 U	4 U	4 U	4 U	4 U
1,3,5-Trimethylbenzene	10 J03	34	5 J3	4 U	4 U	4 U	5	9	4 U	4 U
1,3-Butadiene	4 U	4 U	3 U	2 U	2 U	2 U	2 U	2 U	2 U	2 U
1,3-Dichlorobenzene	10 UJ0	10 U	9 U	5 U	5 U	5 U	5 U	5 U	5 U	5 U
1,4-Dichlorobenzene	670 J03	860	920 J3	5 U	5 U	5 U	5 U	6	5 U	5 U
1,4-Dioxane	6 U	6 U	5 U	3 U	3 U	3 U	3 U	3 U	3 U	3 U
2-Butanone	5 U	5 U	4 U	3 U	2 U	4 U4	2 U	7 U4	2 U	3 U
2-Hexanone	7 U	7 U	6 U	4 U	3 U	3 U	3 U	3 U	3 U	3 U
4-Ethyltoluene	7 UJ0	7 U	6 U	4 U	4 U	4 U	4 U	6	4 U	4 U
4-Methyl-2-Pentanone	7 U	7 U	6 U	4 U	3 U	3 U	3 U	3 U	3 U	3 U
Acetone	4 U	4 U	3 U	10 U4	5 U4	7 U4	7 U4	11	7 U4	7 U4
Benzene	240 J3	290	78 J3	3 U	3 U	3 U	28	28	3 U	3 U
Benzyl Chloride	8 UJ0	9 U	7 U	5 U	4 U	4 U	4 U	4 U	4 U	4 U
Bromodichloromethane	11 U	12 U	9 U	6 U	6 U	6 U	8	8	6 U	6 U
Bromoform	17 UJ0	18 U	15 U	9 U	9 U	9 U	9 U	9 U	9 U	9 U
Bromomethane	6 U	7 U	6 U	3 U	3 U	3 U	3 U	3 U	3 U	3 U
Carbon Disulfide	170 J3	13 U2	11 U2J3	19 U2	3 U	3 U	8 U2	8 U2	3 U2	3 U
Carbon Tetrachloride	10 U	11 U	9 U	6 U	26	6	5 U	5 U	5 U	5 U
Chlorobenzene	520 J03	850	520 J3	4 U	4 U	4 U	4 U	4 U	4 U	4 U
Chloroethane	72 J3	78	10 J3	2 U	2 U	2 U	2 U	2 U	2 U	2 U
Chloroform	8 U	8 U	7 U	36	54	16	6	5	4 U	4 U
Chloromethane	3 U	4 U	3 U2J3	2 U	2 U	2 U	2 U	2 U	2 U	2 U
cis-1,2-Dichloroethene	15 J3	21	6 U	3 U	3 U	3 U	3 U	3 U	3 U	3 U
cis-1,3-Dichloropropene	7 U	8 U	6 U	4 U	4 U	4 U	4 U	4 U	4 U	4 U

TABLE 9: GAS MONITORING PROBE ANALYTICAL RESULTS (Continued)

Parcel E Nonstandard Data Gaps Investigation, Landfill Gas Characterization, Hunters Point Shipyard, San Francisco, California

Sample ID:	GMP12SG003	GMP12SG004	GMP12SG005	GMP13SG001	GMP14SG001	GMP15SG001	GMP16SG001	GMP16SG002	GMP17SG001	GMP18SG001
Point Name:	GMP12	GMP12	GMP12	GMP13	GMP14	GMP15	GMP16	GMP16	GMP17	GMP18
Sample Date:	5/22/2002	7/31/2002	11/13/2002	6/5/2002	6/5/2002	6/5/2002	6/5/2002	6/5/2002	6/5/2002	6/5/2002
EPA TO-14A VOCs (µg/r ^{3}) (Continued										
Cyclohexane	2,300 J38	870	5 U	3 U	3 U	3 U	4 U2	6 U2	3 U	3 U
Dibromochloromethane	14 U	15 U	12 U	8 U	7 U	7 U	11	13	7 U	7 U
Dichlorodifluoromethane	8 U	60	200 J3	4 U	4 U	9	6	9	4 U	4 U
Ethanol	3 U	3 U	3 U	2 U	2 U	2 U	2 U	2 U	2 U	2 U
Ethylbenzene	57 J03	33	11 J3	4 U	4 U	18 U2	28	57	4 U	4 U
Heptane	1,200 J3	130	9 J3	7 U2	3 U	6 U2	22 U2	33 U2	3 U	3 U
Hexachlorobutadiene	17 UJ0	18 U	15 U	9 UJ7	9 UJ7	9 UJ7	9 UJ7	9 UJ7	9 UJ7	9 UJ7
Hexane	2,400 J38	1,600	54 J3	7 U2	3 U	3 U	11 U2	13 U2	3 U	3 U
Isopropyl Alcohol	4 U	4 U	3 U	6	10	2 U	2 U	2 U	2 U	2 U
m,p-Xylenes	43 U2J03	24 U2	8 J3	8 U2	4 U	22 U2	48	84	5 U2	5 U2
Methylene Chloride	12 U4J3	23 U4	17 U4J3	3 U	3 U	3 U	3 U	3 U	3 U	3 U
o-Xylene	26 J03	18 U2	11 J3	4 UJ3	4 UJ3	8 J3	22 J3	35 J3	4 UJ3	4 UJ3
Propylene	260 J3	3 U	98 J3	11 U2	1 U	2 U2	11 U2	13 U2	1 U	2 U2
Styrene	7 UJ0	7 U	6 U	4 U	4 U	4 U	5	8	4 U	4 U
Tert-Butyl Methyl Ether	6 U	6 U	5 U	3 U	3 U	3 U	3 U	3 U	3 U	3 U
Tetrachloroethene	11 U	12 U	8 J3	14	3 U	12	3 U	6	3 U	3 U
Tetrahydrofuran	5 U	5 U	4 U	3 U	2 U	2 U	2 U	3	2 U	3 U
Toluene	13 U2J3	13 U2	11 U2J3	11 U2	26 U2	31 U2	130 U2	160 U2	13 U2	17 U2
trans-1,2-Dichloroethene	8 J3	8	6 U	3 U	3 U	3 U	3 U	3 U	3 U	3 U
trans-1,3-Dichloropropene	7 U	8 U	6 U	4 U	4 U	4 U	4 U	4 U	4 U	4 U
Trichloroethene	12 J3	9 J	7 J3	5 U	5 U	5 U	5 U	5 U	5 U	16
Trichlorofluoromethane	9 U	10 U	8 U	5 U	6	5	6	6	5 U	5 U
Vinyl Acetate	6 U	6 U	5 U	3 U	3 U	3 U	3 U	3 U	3 U	3 U
Vinyl Chloride	25 J3	13	4 U	2 U	2 U	2 U	2 U	2 U	2 U	2 U
Total VOCs	8,284	4,946	2,037	56	135	63	185	316	0	16

TABLE 9: GAS MONITORING PROBE ANALYTICAL RESULTS (Continued)

Parcel E Nonstandard Data Gaps Investigation, Landfill Gas Characterization, Hunters Point Shipyard, San Francisco, California

Sample ID:	GMP19SG001	GMP22003	GMP23001	GMP24SG001	GMP25SG001
Point Name:	GMP19	GMP22	GMP23	GMP24	GMP25
Sample Date:	6/5/2002	11/13/2002	11/13/2002	11/13/2002	11/13/2002
EPA 25C Total Nonmethane VOCs (ppmv)					
Methane	0.6 U2	NA	NA	NA	NA
Nonmethane Organic Carbon	0.2 U	54	43	130	75
EPA 3C Landfill Gas (percent)					
Carbon Dioxide	0.1 J	13	5	13	13
Carbon Monoxide	0.2 U	0.1 U	0.1 U	0.1 U	0.1 U
Methane	0.2 U	0.7	0.6	2	0.6
Nitrogen	81	85	94	83	85
Oxygen	19	1	1	2	2
EPA TO-14A VOA (µg/m3)	7 U				
1,1,1-Trichloroethane	5 U	18 J3	17 J3	7 U	8 U
1,1,2,2-Tetrachloroethane	6 U	10 U	10 U	9 U	10 U
1,1,2-Trichloro-1,2,2-Trifluoroethane	7 U	32 J3	30 J3	10 U	11 U
1,1,2-Trichloroethane	5 U	22 J3	8 U	7 U	8 U
1,1-Dichloroethane	3 U	6 U	6 U	62 J3	49 J3
1,1-Dichloroethene	3 U	15 J3	15 J3	5 U	6 U
1,2,4-Trichlorobenzene	7	11 U	11 U	10 U	11 U
1,2,4-Trimethylbenzene	26	320 J3	250 J3	600 J3	7 U
1,2-Dibromoethane	7 U	20 J3	21 J3	10 U	11 U
1,2-Dichloro-1,1,2,2-Tetrafluoroethane	6 U	170 J3	33 J3	140 J3	130 J3
1,2-Dichlorobenzene	5 U	49 J3	43 J3	8 U	9 U
1,2-Dichlroethane	3 U	6 U	6 U	5 U	6 U
1,2-Dichloropropane	4 U	7 U	19 J3	6 U	7 U
1,3,5-Trimethylbenzene	5	300 J3	370 J3	750 J3	6 J3
1,3-Butadiene	11	3 U	3 U	3 U	3 U
1,3-Dichlorobenzene	5 U	28 J3	24 J3	8 U	9 U
1,4-Dichlorobenzene	5 U	100 J3	49 J3	16 J3	11 J3
1,4-Dioxane	3 U	5 U	5 U	5 U	5 U
2-Butanone	3 U	390 J3	480 J3	390 J3	4 U
2-Hexanone	3 U	6 U	6 U	5 U	6 U
4-Ethyltoluene	4 U	75 J3	71 J3	88 J3	6 U
4-Methyl-2-Pentanone	3 U	6 U	6 U	5 U	6 U
Acetone	5 U4	890	5,100	3,100	3 U
Benzene	14	100 J3	310 J3	160 J3	49 J3
Benzyl Chloride	4 U	7 U	7 U	7 U	7 U
Bromodichloromethane	12	9 U	9 U	9 U	9 U
Bromoform	9 U	15 U	58 J3	14 U	15 U
Bromomethane	3 U	29 J3	17 J3	5 U	6 U
Carbon Disulfide	9 U2	250 J3	1,000 J3	350 J3	26 J3
Carbon Tetrachloride	5 U	20 J3	21 J3	8 U	9 U
Chlorobenzene	4 U	7 U	520 J3	6 U	140 J3
Chloroethane	2 U	56 J3	72 J3	270 J3	160 J3
Chloroform	10	26 J3	16 J3	6 U	7 U
Chloromethane	2 U	380 J3	800 J3	270 J3	3 U
cis-1,2-Dichloroethene	3 U	27 J3	36 J3	48 J3	10 J3
cis-1,3-Dichloropropene	4 U	13 J3	15 J3	6 U	6 U

TABLE 9: GAS MONITORING PROBE ANALYTICAL RESULTS (Continued)

Parcel E Nonstandard Data Gaps Investigation, Landfill Gas Characterization, Hunters Point Shipyard, San Francisco, California

Sample ID:	GMP19SG001	GMP22003	GMP23001	GMP24SG001	GMP25SG001
Point Name:	GMP19	GMP22	GMP23	GMP24	GMP25
Sample Date:	6/5/2002	11/13/2002	11/13/2002	11/13/2002	11/13/2002
EPA TO-14A VOCs (µg/m^3) (Continued					
Cyclohexane	6 U2	1,500 J3	660 J3	630 J3	450 J3
Dibromochloromethane	7 U	12 U	24 J3	11 U	12 U
Dichlorodifluoromethane	5	210 J3	30 J3	100 J3	240 J3
Ethanol	2 U	29 U2J3	21 U2	15 U2J3	3 U2J3
Ethylbenzene	8 U2	130 J3	170 J3	92 J3	6 J3
Heptane	15 U2	920 J3	1,200 J3	500 J3	12 J3
Hexachlorobutadiene	21 J7	38 J3	15 U	14 U	15 U
Hexane	19 U2	1,200 J3	1,200 J3	790 J3	140 J3
Isopropyl Alcohol	2 U	3 U	3 U	3 U	3 U
m,p-Xylenes	24 U2	1,100 J3	620 J3	1,000 J3	57 J3
Methylene Chloride	3 U4	140 J3	120 J3	14 U4J3	11 U4J3
o-Xylene	11 J3	660 J3	400 J3	700 J3	29 J3
Propylene	37	1,200	26,000	4,900	840 J3
Styrene	4 U	29 J3	25 J3	36 J3	6 U
Tert-Butyl Methyl Ether	3 U	5 U	5 U	5 U	5 U
Tetrachloroethene	3 U	43 J3	38 J3	19 J3	11 J3
Tetrahydrofuran	3 U	4 U	11 J3	4 U	4 U
Toluene	28 U2	77 J3	96 J3	61 J3	9 U2J3
trans-1,2-Dichloroethene	3 U	18 J3	19 J3	5 U	6 U
trans-1,3-Dichloropropene	4 U	13 J3	13 J3	6 U	6 U
Trichloroethene	5 U	39 J3	36 J3	19 J3	8 J3
Trichlorofluoromethane	5 U	19 J3	18 J3	9 J3	8 U
Vinyl Acetate	3 U	5 U	5 U	5 U	5 U
Vinyl Chloride	2 U	15 J3	17 J3	14 J3	4 J3
Total VOCs	159	10,681	40,084	15,114	2,378

Notes: EPA Method 25C initially analyzes for methane and then converts all of the nonmethane organic compounds to methane and reports them as NMOC as methane.

µg/m^3	Micrograms per cubic meter
EPA	U.S. Environmental Protection Agency
GMP	Gas monitoring probe
ID	Identification
NA	Not analyzed
ppmv	Parts per million by volume
TO-14A	Toxic Organics-14A
VOA	Volatile organic compound

Qualifiers and Comment Codes:

J	Estimated
U	Nondetected (numerical value is the reporting limit)
0	Internal standard problems
2	Field blank contamination
3	Surrogate/laboratory control sample/matrix spike problems
4	Laboratory contaminant
8	Calibration range problems

TABLE 10: COMPARISON OF NAVY AND EPA SPLIT-SAMPLE ANALYTICAL RESULTS

Parcel E Nonstandard Data Gaps Investigation, Landfill Gas Characterization, Hunters Point Shipyard, San Francisco, California

Sample ID No.:	GMP-09				GMP-08				GMP-07				GMP-12				GMP-01			
EPA Sample ID No.:	AB36266				AB36267				AB36270				AB36272				AB36273			
Date of Collection:	07/31/02				07/31/02				07/31/02				07/31/02				07/31/02			
Analyte	EPA Result (ppbv)[1]	Q	Comment	Tetra Tech Result (ppbv)	EPA Result (ppbv)	Q	Comment	Tetra Tech Result (ppbv)	EPA Result (ppbv)	Q	Comment	Tetra Tech Result (ppbv)	EPA Result (ppbv)	Q	Comment	Tetra Tech Result (ppbv)	EPA Result (ppbv)	Q	Comment	Tetra Tech Result (ppbv)
1,1,1-Trichloroethane	**15**	**J**	**B**	NA	2,400	U		**2.6**	100	U		1.6 U	800	U		1.7 U	800	U		1.7 U
1,1,2,2-Tetrachloroethane	3	U		NA	2,400	U		1.9 U	100	U		1.6 U	800	U		1.7 U	800	U		1.7 U
1,1,2-Trichloro-1,2,2-Trifluoroethane	3	UJ	B	NA	2,400	U		1.9 U	100	U		1.6 U	800	U		1.7 U	800	U		1.7 U
1,1,2-Trichloroethane	3	U		NA	2,400	U		1.9 U	100	U		1.6 U	800	U		1.7 U	800	U		1.7 U
1,1-Dichloroethane	3	UJ	B	NA	2,400	U		**100**	100	U		**4.4**	800	U		1.7 U	800	U		**18**
1,1-Dichloroethene	3	UJ	B	NA	2,400	U		**1 J**	100	U		1.6 U	800	U		1.7 U	800	U		1.7 U
1,2,4-Trichlorobenzene	3	U		NA	2,400	U		1.9 U	100	U		1.6 U	800	U		1.7 U	800	U		1.7 U
1,2,4-Trimethylbenzene	3	U		NA	**1,900**	**J**	**A**	**3,400**	100	U		**40**	800	U		**18**	800	U		**36**
1,2-Dibromoethane	3	U		NA	2,400	U		1.9 U	100	U		1.6 U	800	U		1.7 U	800	U		1.7 U
1,2-Dichlorobenzene	3	U		NA	2,400	U		1.9 U	100	U		1.6 U	800	U		**0.93 J**	800	U		**3.3**
1,2-Dichloroethane	3	U		NA	2,400	U		1.9 U	100	U		1.6 U	800	U		1.7 U	800	U		**2.7**
1,2-Dichloropropane	3	U		NA	2,400	U		1.9 U	100	U		1.6 U	800	U		1.7 U	800	U		1.7 U
1,3,5-Trimethylbenzene	3	U		NA	2,400	U		**1,800**	100	U		**13**	800	U		**6.8**	800	U		**32**
1,3-Dichlorobenzene	3	U		NA	2,400	U		1.9 U	100	U		1.6 U	800	U		1.7 U	800	U		**8.1**
1,4-Dichlorobenzene	3	U		NA	2,400	U		1.9 U	100	U		1.6 U	800	U		**140**	800	U		**110**
Benzene	3	U		NA	2,400	U		**97**	100	U		**0.89 J**	800	U		**88**	800	U		**98**
Bromomethane	3	UJ	B	NA	2,400	U		1.9 U	100	U		1.6 U	800	U		1.7 U	800	U		1.7 U
Carbon tetrachloride	3	UJ	B	NA	2,400	U		1.9 U	100	U		1.6 U	800	U		1.7 U	800	U		1.7 U
Chlorobenzene	3	U		NA	2,400	U		1.9 U	100	U		1.6 U	800	U		**180**	800	U		**350**
Chloroethane	3	UJ	B	NA	**1,600**	**J**	**A**	**2700**	100	U		**2.6**	800	U		**29**	800	U		**61**
Chloroform	3	UJ	B	NA	2,400	U		1.9 U	100	U		1.6 U	800	U		1.7 U	800	U		1.7 U
Chloromethane	3	UJ	B	NA	2,400	U		1.9 U	100	U		1.6 U	800	U		1.7 U	800	U		2.7 U
cis-1,2-Dichloroethene	3	UJ	B	NA	2,400	U		**8.1**	100	U		**1.3 J**	800	U		**5.3**	800	U		**10**
cis-1,3-Dichloropropene	3	U		NA	2,400	U		1.9 U	100	U		1.6 U	800	U		1.7 U	800	U		1.7 U
Dichlorodifluoromethane	3	UJ	B	NA	2,400	U		4 U	**70**	**J**	**A**	**65**	800	U		**12**	**1,100**			**830 J**
Dichlorotetrafluoroethane	3	UJ	B	NA	2,400	U		**150**	**110**			**150**	800	U		**47**	800	U		**38**
Ethylbenzene	3	U		NA	2,400	U		**54**	100	U		1.6 U	800	U		**7.6**	800	U		**17**
Hexachlorobutadiene	3	U		NA	2,400	U		1.9 U	100	U		1.6 U	800	U		**1.7**	800	U		1.7 U
m & p-Xylene	6	U		NA	4,800	U		**290**	100	U		3.5 U	1600	U		5.5 U	1,600	U		11 U
Methylene chloride	3	UJ	B	NA	2,400	U		4.6 U	100	U		2.7 U	800	U		6.4 U	800	U		4.5 U
o-Xylene	3	U		NA	2,400	U		**170**	100	U		1.9 U	800	U		4.1 U	800	U		**5.6**
Styrene	3	U		NA	2,400	U		1.9 U	100	U		1.6 U	800	U		1.7 U	800	U		1.7 U
Tetrachloroethene	3	U		NA	2,400	U		1.9 U	100	U		1.6 U	800	U		1.7 U	800	U		**1.5 J**
Toluene	3	U		NA	2,400	U		13U	100	U		1.7 U	800	U		3.3 U	800	U		19 U
trans-1,3-Dichloropropene	3	U		NA	2,400	U		1.9 U	100	U		1.6 U	800	U		1.7 U	800	U		1.7 U
Trichloroethylene	**24**			NA	2,400	U		**1.6 J**	100	U		1.6 U	800	U		**1.6 J**	800	U		**3.8**
Trichlorofluoromethane	**11**	**J**	**B**	NA	2,400	U		1.9 U	100	U		1.6 U	800	U		1.7 U	800	U		1.7 U
Vinyl chloride	3	UJ	B	NA	2,400	U		**58**	100	U		**2.4**	800	U		**5**	800	U		**68**

TABLE 10: COMPARISON OF NAVY AND EPA SPLIT-SAMPLE ANALYTICAL RESULTS (Continued)

Parcel E Nonstandard Data Gaps Investigation, Landfill Gas Characterization, Hunters Point Shipyard, San Francisco, California

Notes:	Bold text indicates compound was detected.
1	EPA sent the split samples to an EPA approved lab and had them analyzed by EPA Method Toxic Organics 15.
A	Result was below the quantitation limit and above one-half the quantitation limit.
B	Internal standard problem
EPA	U.S. Environmental Protection Agency
GMP	Gas monitoring probe
ID	Identification
J	Estimated concentration
Navy	U.S. Department of the Navy
ppbv	Parts per billion by volume
Q	Laboratory data qualifier
Tetra Tech	Tetra Tech EM Inc.
U	This compound was analyzed for, but not detected.

TABLE 11: GROUNDWATER MONITORING WELL ANALYTICAL RESULTS

Parcel E Nonstandard Data Gaps Investigation, Landfill Gas Characterization, Hunters Point Shipyard, San Francisco, California

Sample ID:	IR01MW16ASG001	IR01MW16ASG002	IR01MW16ASG003	IR01MW16ASG004	IR01MW18ASG001	IR01MW18ASG002	IR01MW18ASG003	IR01MW366ASG001
Point Name:	IR01MW16A	IR01MW16A	IR01MW16A	IR01MW16A	IR01MW18A	IR01MW18A	IR01MW18A	IR01MW366A
Sample Date:	4/22/2002	5/22/2002	8/1/2002	11/13/2002	4/22/2002	8/1/2002	11/13/2002	4/22/2002
EPA 25C Total Nonmethane VOCsn (ppmv)								
Methane	600,000 J8	NA	NA	NA	450,000 J8	NA	NA	670,000 J8
Nonmethane VOCs	51	93	27	68	44	61	150	54
EPA 3C Landfill Gas (percent)								
Carbon Dioxide	26	30	31	27	24	31	31	9
Carbon Monoxide	0.1 U	0.2 U	0.2 U	0.1 U	0.2 U	0.2 U	0.1 U	0.1 U
Methane	56	55	51	45	44	56	58	19
Nitrogen	17	14	17	26	32	12	10	71
Oxygen	0.7	1	0.5	3	0.2	0.8	2	0.1 U
EPA TO-14A VOCs (µg/m3								
1,1,1-Trichloroethane	77 U	9 U	9 U	8 U	80 U	9 U	7 U	8 U
1,1,2,2-Tetrachloroethane	98 U	11 U	11 U	10 U	100 U	11 U	9 U	10 U
1,1,2-Trichloro-1,2,2-Trifluoroethane	110 U	60 U2J3	12 U	11 U	110 U	8 J	10 U	11 U
1,1,2-Trichloroethane	77 U	9 U	9 U	8 U	80 U	9 U	7 U	8 U
1,1-Dichloroethane	58 U	7 U	7 U	6 U	60 U	10	5 U	6 U
1,1-Dichloroethene	56 U	6 U	6 U	6 U	59 U	6 U	5 U	6 U
1,2,4-Trichlorobenzene	110 U	12 U	40	11 U	110 U	12 U	10 U	11 U
1,2,4-Trimethylbenzene	180	260 J3	550	70	110	170	500 J3	8 J
1,2-Dibromoethane	110 U	13 U	13 U	11 U	110 U	13 U	10 U	11 U
1,2-Dichloro-1,1,2,2-Tetrafhloroethane	420	210 J3	260	180	250	170	160 J3	140
1,2-Dichlorobenzene	85 U	10 U	6 J	9 U	89 U	9 J	16 J3	9 U
1,2-Dichlroethane	58 U	7 U	7 J	6 U	60 U	7 U	5 J3	6 U
1,2-Dichloropropane	66 U	8 U	8 U	7 U	68 U	4 J	6 U	7 U
1,3,5-Trimethylbenzene	93	110 J3	210	44	57 J	110	260 J3	7 U
1,3-Butadiene	31 U	4 U	4 U	3 U	33 U	4 U	3 U	3 U
1,3-Dichlorobenzene	70 J	51 J3	86	45	52 J	37	45 J3	9 U
1,4-Dichlorobenzene	210	150 J3	280	130	490	370	460 J3	10 J
1,4-Dioxane	51 U	6 U	6 U	5 U	53 U	6 U	5 U	5 U
2-Butanone	42 U	5 U	60	4 U	44 U	60	4 U	4 U
2-Hexanone	58 U	7 U	7 U	6 U	61 U	7 U	5 U	6 U
4-Ethyltoluene	62 U	110 J3	220	6 U	64 U	110	140 J3	6 U
4-Methyl-2-Pentanone	58 U	7 U	7 U	6 U	61 U	7 U	5 U	6 U
Acetone	84 U4	4 U	210	3 U	47 U4	2,000	46 J3	3 U
Benzene	410	680 J3	300	160	62	110	140 J3	5 U
Benzyl Chloride	74 U	8 U	8 U	7 U	77 U	8 U	7 U	7 U
Bromodichloromethane	95 U	11 U	11 U	9 U	99 U	11 U	9 U	9 U
Bromoform	150 U	17 U	17 U	15 U	150 U	17 U	14 U	15 U
Bromomethane	55 U	6 U	6 U	6 U	57 U	6 U	5 U	6 U
Carbon Disulfide	44 U	10 J3	5 U	17	46 U	7	7 U2J3	5 J
Carbon Tetrachloride	90 U	10 U	10 U	9 U	93 U	10 U	8 U	9 U
Chlorobenzene	66 U	8 U	8 U	7 U	160	8 U	270 J3	7 U
Chloroethane	140	110 J3	130	120	140	80	83 J3	8 U
Chloroform	69 U	8 U	8 U	7 U	72 U	8 U	6 U	34 J
Chloromethane	36	3 U	3 U	12 U2	31 U	3 U	3 U	17 U2
cis-1,2-Dichloroethene	50 J	60 J3	48	32	58 U	23	25 J3	6 U
cis-1,3-Dichloropropene	64 U	7 U	7 U	6 U	67 U	7 U	6 U	6 U

TABLE 11: GROUNDWATER MONITORING WELL ANALYTICAL RESULTS (Continued)

Parcel E Nonstandard Data Gaps Investigation, Landfill Gas Characterization, Hunters Point Shipyard, San Francisco, California

Sample ID:	IR01MW16ASG001	IR01MW16ASG002	IR01MW16ASG003	IR01MW16ASG004	IR01MW18ASG001	IR01MW18ASG002	IR01MW18ASG003	IR01MW366ASG001
Point Name:	IR01MW16A	IR01MW16A	IR01MW16A	IR01MW16A	IR01MW18A	IR01MW18A	IR01MW18A	IR01MW366A
Sample Date:	4/22/2002	5/22/2002	8/1/2002	11/13/2002	4/22/2002	8/1/2002	11/13/2002	4/22/2002
EPA TO-14A VOCs (µg/r ^{3}) (Continued								
Cyclohexane	2,400	1,800 J3	1,300	2,000 J8	1,200	770	1,500 J3	13 U2
Dibromochloromethane	120 U	14 U	14 U	12 U	130 U	14 U	11 U	12 U
Dichlorodifluoromethane	230	42 J3	86	150	510	120	180 J3	7 U
Ethanol	27 U	3 U	3 U	3 U	28 U	3 U	2 U	3 U
Ethylbenzene	83	180 J3	390	53	68	100	130 J3	6 U
Heptane	3,700	5,400 J38	3,700	830	510	2,100	2,900	17
Hexachlorobutadiene	150 U	17 U	17 U	15 U	33 J	17 U	14 U	15 U
Hexane	2,500	2,100 J3	2,200	1,600	1,300	1,700	2,100	33
Isopropyl Alcohol	35 U	4 U	4 U	3 U	36 U	300	3 U	3 U
m,p-Xylenes	190	440 J3	790	110	100	280	570 J3	7 J
Methylene Chloride	96 U4	39 J3	13 U4	11 U4	120 U4	17 U4	16 U4J3	13 U4
o-Xylene	74	130 J3	220	43	49 J	97	220 J3	6 U
Propylene	3,000	1,300 J38	880	890	1,200	3,700	2,500	290
Styrene	60 U	7 U	12	6 U	63 U	7 U	6 U	6 U
Tert-Butyl Methyl Ether	51 U	6 U	6 U	5 U	53 U	6 U	5 U	5 U
Tetrachloroethene	97 U	30 J3	90	21	100 U	7 J	9 J3	10 U
Tetrahydrofuran	42 U	5 U	5 U	4 U	44 U	5 U	4 U	4 U
Toluene	110	230 J3	320	57	49 J	200	100 J3	5 U
trans-1,2-Dichloroethene	41 J	48 J3	34	27	58 U	10	10 J3	6 U
trans-1,3-Dichloropropene	64 U	7 U	7 U	6 U	67 U	7 U	6 U	6 U
Trichloroethene	64 J	38 J3	53	28	17 J	12	10 J3	13 J
Trichlorofluoromethane	80 U	9 U	9 U	8 U	83 U	9 U	7 U	140
Vinyl Acetate	50 U	6 U	6 U	5 U	52 U	6 U	5 U	5 U
Vinyl Chloride	79	83 J3	36	39	31 J	47	83 J3	4 U
Total VOCs	14,080	13,611	12,518	6,646	6,388	12,721	12,462	664

TABLE 11: GROUNDWATER MONITORING WELL ANALYTICAL RESULTS (Continued)

Parcel E Nonstandard Data Gaps Investigation, Landfill Gas Characterization, Hunters Point Shipyard, San Francisco, California

Sample ID:	IR01MW366ASG002	IR01MW366ASG003	IR01MW366ASG004	IR01MW366ASG005	IR01MWI-5SG001	IR01MWI-5SG002	IR01MWI-5SG003
Point Name:	IR01MW366A	IR01MW366A	IR01MW366A	IR01MW366A	IR01MWI-5	IR01MWI-5	IR01MWI-5
Sample Date:	5/22/2002	8/1/2002	8/1/2002	11/13/2002	4/22/2002	8/1/2002	11/13/2002
EPA 25C Total Nonmethane VOCs (ppmv)							
Methane	NA	NA	NA	NA	690,000 J8	NA	NA
Nonmethane VOCs	38	45	95	57	100	80	390
EPA 3C Landfill Gas (percent)							
Carbon Dioxide	7	8	13	9	25	30	29
Carbon Monoxide	0.2 U	0.2 U	0.2 U	0.1 U	0.2 U	0.2 U	0.1 U
Methane	11	12	21	12	65	67	64
Nitrogen	74	71	64	71	9	3	3
Oxygen	8	9	2	8	2	0.3	0.4
EPA TO-14A VOCs (µg/m3							
1,1,1-Trichloroethane	9 U	8 J	8 J	8 U	81 U	9 U	7 U
1,1,2,2-Tetrachloroethane	11 U	16 U	11 U	10 U	100 U	11 U	9 U
1,1,2-Trichloro-1,2,2-Trifluoroethane	12 U	18 U	12 U	11 U	110 U	12 U	10 U
1,1,2-Trichloroethane	9 U	13 U	9 U	8 U	81 U	9 U	7 U
1,1-Dichloroethane	7 U	9 U	5 J	6 U	60 U	7 U	5 U
1,1-Dichloroethene	6 U	9 U	6 U	6 U	59 U	6 U	5 U
1,2,4-Trichlorobenzene	12 U	17 U	12 U	11 U	22 J	12 U	10 U
1,2,4-Trimethylbenzene	8 U	65	8 U	7 U	770	150	220 J3
1,2-Dibromoethane	13 U	18 U	13 U	11 U	110 U	13 U	10 U
1,2-Dichloro-1,1,2,2-Tetrafhloroethane	100	120	180	130	890	390	570 J3
1,2-Dichlorobenzene	10 U	14 U	10 U	9 U	28 J	10 U	5 J3
1,2-Dichlroethane	7 U	9 U	7 U	6 U	17 J	8	5 U
1,2-Dichloropropane	8 U	11 U	8 U	7 U	69 U	8 U	6 U
1,3,5-Trimethylbenzene	8 U	22	8 U	7 U	1,300	140	110 J3
1,3-Butadiene	4 U	5 U	4 U	3 U	33 U	4 U	3 U
1,3-Dichlorobenzene	10 U	14 U	10 U	9 U	38 J	29	86 J3
1,4-Dichlorobenzene	10 U	14 U	10 U	9 U	360	290	790 J3
1,4-Dioxane	6 U	8 U	6 U	5 U	53 U	6 U	5 U
2-Butanone	5 U	25 U4	13 U4	4 U	44 U	5 U	4 U
2-Hexanone	7 U	10 U	7 U	6 U	61 U	7 U	5 U
4-Ethyltoluene	7 U	11	7 U	6 U	650	53	49 J3
4-Methyl-2-Pentanone	7 U	10 U	7 U	6 U	61 U	7 U	5 U
Acetone	22 U2	130	94	7 U4	1,300	4 U	310 J3
Benzene	5 U	4 J	3 J	5 U	670	680	910 J3
Benzyl Chloride	8 U	12 U	8 U	7 U	77 U	8 U	7 U
Bromodichloromethane	11 U	16 U	11 U	9 U	99 U	11 U	9 U
Bromoform	17 U	24 U	17 U	15 U	150 U	17 U	14 U
Bromomethane	6 U	9 U	6 U	6 U	58 U	6 U	5 U
Carbon Disulfide	5 U	66	18	4 U	46 U	5 U	4 U
Carbon Tetrachloride	10 U	15 U	10 U	9 U	93 U	10 U	8 U
Chlorobenzene	8 U	11 U	8 U	7 U	390	710	940 J3
Chloroethane	7	12	12	9	78	21	3 U
Chloroform	12	13	20	7 U	72 U	8 U	6 U
Chloromethane	16	23	34	11 U2	31 U	3 U	3 U
cis-1,2-Dichloroethene	6 U	9 U	6 U	6 U	14 J	13	16 J3
cis-1,3-Dichloropropene	7 U	11 U	7 U	6 U	67 U	7 U	6 U

TABLE 11: GROUNDWATER MONITORING WELL ANALYTICAL RESULTS (Continued)

Parcel E Nonstandard Data Gaps Investigation, Landfill Gas Characterization, Hunters Point Shipyard, San Francisco, California

Sample ID:	IR01MW366ASG002	IR01MW366ASG003	IR01MW366ASG004	IR01MW366ASG005	IR01MWI-5SG001	IR01MWI-5SG002	IR01MWI-5SG003
Point Name:	IR01MW366A	IR01MW366A	IR01MW366A	IR01MW366A	IR01MWI-5	IR01MWI-5	IR01MWI-5
Sample Date:	5/22/2002	8/1/2002	8/1/2002	11/13/2002	4/22/2002	8/1/2002	11/13/2002
EPA TO-14A VOCs (µg/m^3) (Continued							
Cyclohexane	6 U	14	7	6	3,700	1,300	1,100 J3
Dibromochloromethane	14 U	20 U	14 U	12 U	130 U	14 U	11 U
Dichlorodifluoromethane	8 U	12 U	8 U	7 U	260	47	21 J3
Ethanol	3 U	74	3 U	3 U	28 U	3 U	2 U
Ethylbenzene	7 U	22	7 U	6 U	1,600	1,100	530 J3
Heptane	7 U	15	10	6 J	11,000	5,400	2,900
Hexachlorobutadiene	17 U	25 U	17 U	15 U	61 J	17 U	14 U
Hexane	14 U2	250	43	6	3,200	4,300	2,400
Isopropyl Alcohol	4 U	130	4 U	3 U	36 U	4 U	3 U
m,p-Xylenes	7 U	70	7	3 J	3,200	1,200	570 J3
Methylene Chloride	8 U4	280	11 U4	11 U4	160 U4	7 U4	13 U4J3
o-Xylene	7 U	27	4 J	6 U	530	210	130 J3
Propylene	250	700	1,000	510	3,700	81	1,800
Styrene	7 U	10 U	7 U	6 U	63 U	7 U	6 U
Tert-Butyl Methyl Ether	6 U	8 U	6 U	5 U	53 U	6 U	5 U
Tetrachloroethene	11 U	16 U	6 J	6 J	100 U	11 U	9 U
Tetrahydrofuran	5 U	7 U	5 U	4 U	44 U	5 U	4 U
Toluene	6 U	54	4 J	5 U2	160	460	920 J3
trans-1,2-Dichloroethene	6 U	9 U	6 U	6 U	58 U	6 U	5 U
trans-1,3-Dichloropropene	7 U	11 U	7 U	6 U	67 U	7 U	6 U
Trichloroethene	9	14	18	13	81 U	9 U	7 U
Trichlorofluoromethane	130	170	200	170	230	15	7 U
Vinyl Acetate	6 U	8 U	6 U	5 U	52 U	6 U	5 U
Vinyl Chloride	4 U	6 U	4 U	4 U	33 J	4 U	3 U
Total VOCs	524	2,294	1,673	859	33,431	16,597	14,377

Notes: EPA Method 25C was used and the result is expressed as "Total Nonmethane VOCs."

µg/m^3 Micrograms per cubic meter
EPA U.S. Environmental Protection Agency
ID Identification
IR Installation Restoration
MW Monitoring well
NA Not analyzed
ppmv Parts per million by volume
SG Soil gas
TO-14A Toxic Organics-14A
VOC Volatile organic compound

Qualifiers and Comment Codes

J Estimated
U Nondetected (numerical value is the reporting limit)
2 Field blank contamination
3 Surrogate/laboratory control sample/matrix spike problems
4 Laboratory contaminant
8 Calibration range problems

APPENDIX A
SOIL BORING LOGS

LIST OF BORING LOGS

SG01	SG05A	SG15	GMP01	GMP11
SG01A	SG05B	SG16	GMP01A	GMP11A
SG01B	SG05C	SG19	GMP02	GMP12
SG01C	SG05D	SG20	GMP02A	GMP13
SG01D	SG06	SG21	GMP03	GMP14
SG01E	SG06A	SG21A	GMP03A	GMP15
SG02	SG06B	SG22	GMP04	GMP16
SG02A	SG06C	SG22A	GMP04A	GMP17
SG02B	SG07	SG23	GMP05	GMP18
SG02C	SG07A	SG24	GMP05A	GMP19
SG02E	SG07B	SG25	GMP05B	GMP20
SG02F	SG08	SG25A	GMP06	GMP21
SG02G	SG08A	SG25B	GMP06A	GMP22
SG03	SG08B	SG25C	GMP06B	GMP23
SG03A	SG09	SG25D	GMP07	GMP24
SG03B	SG10	SG26A	GMP07A	GMP25
SG03C	SG11	SG27A	GMP08	GMP26
SG03D	SG12	SG27B	GMP08A	
SG04	SG13		GMP09	
SG04A	SG14		GMP10	

Tetra Tech EM Inc.

Log of Soil-Gas Boring: SG01

Logged By: KATHY VANDENHEUVEL
Logging Consultant: TETRA TECH
Drilling Company: GREGG

Project: HPS Parcel E Nonstandard Data Gaps
Project No: G90160030301020711
Location: Parcel E IR-01/21 Landfill
Surface Elevation (feet): 18.45
Top of Casing Elevation (feet MSL): NA

Drilling Method: DIRECT-PUSH
Boring Started: 03/27/02
Completed: 03/27/02
Boring Depth (feet bgs): 16.00
Boring Diameter (inches): 2.00

DEPTH (FEET)	DRIVE INTERVAL	RECOVERY (IN)	BLOW COUNT	LAB SAMPLE	SOIL GAS SAMPLE ID	OVM (PPM)	VOCS (PPM)	METHANE (% BY VOLUME IN AIR)	WATER LEVEL	GRAPHIC LOG	ASTM SOIL TYPE	DESCRIPTION
												Ground Surface
0–1											CL	CLAY WITH SAND: dark reddish gray (5YR 4/2); slightly moist
1–4		30									CL	SANDY CLAY: dark gray (10YR 4/1); 30% SAND/70% LEAN CLAY; increasing sand content to well-graded; decreasing moisture content
4–8		30			SG01SG001		0	66.9			CL	
8–12		24									SC	CLAYEY SAND: dark bluish gray (5B 4/1); well-graded with occasional gravel; increasing moisture content
12–16		30			SG01SG002		0.5	56.6			SC	
16												Total depth of boring = 16 feet

Tetra Tech EM Inc.

Log of Soil-Gas Boring: SG01A

Logged By: KATHY VANDENHEUVEL
Logging Consultant: TETRA TECH
Drilling Company: GREGG

Project: HPS Parcel E Nonstandard Data Gaps
Project No: G90160030301020711
Location: Parcel E IR-01/21 Landfill
Surface Elevation (feet): 18.55
Top of Casing Elevation (feet MSL): NA

Drilling Method: DIRECT-PUSH
Boring Started: 04/01/02
Completed: 04/01/02
Boring Depth (feet bgs): 12.00
Boring Diameter (inches): 2.00

DEPTH (FEET)	DRIVE INTERVAL	RECOVERY (IN)	BLOW COUNT	LAB SAMPLE	SOIL GAS SAMPLE ID	OVM (PPM)	VOCS (PPM)	METHANE (% BY VOLUME IN AIR)	WATER LEVEL	GRAPHIC LOG	ASTM SOIL TYPE	DESCRIPTION
0												Ground Surface
1												SAND WITH CLAY AND OCCASIONAL GRAVEL: pale olive (5Y 6/3); slightly moist
2		43									SP	
3												
4												SAND WITH OCCASIONAL GRAVEL: fine- to medium-grained; wood chips, red brick, and rope from 11.5 to 1 feet
5												
6		24										
7												No groundwater encountered; Refusal at 12.0 feet
8											SP	
9												
10		24										
11												
12												Total depth of boring = 12 feet
13												
14												
15												
16												
17												
18												
19												
20												
21												
22												
23												
24												
25												
26												
27												
28												
29												
30												
31												
32												
33												
34												
35												

Tetra Tech EM Inc.

Log of Soil-Gas Boring: SG01B

Logged By: KATHY VANDENHEUVEL
Logging Consultant: TETRA TECH
Drilling Company: GREGG

Project: HPS Parcel E Nonstandard Data Gaps
Project No: G90160030301020711
Location: Parcel E IR-01/21 Landfill
Surface Elevation (feet): 20.91
Top of Casing Elevation (feet MSL): NA

Drilling Method: DIRECT-PUSH
Boring Started: 04/01/02
Completed: 04/01/02
Boring Depth (feet bgs): 20.00
Boring Diameter (inches): 2.00

DEPTH (FEET)	DRIVE INTERVAL	RECOVERY (IN)	BLOW COUNT	LAB SAMPLE	SOIL GAS SAMPLE ID	OVM (PPM)	VOCS (PPM)	METHANE (% BY VOLUME IN AIR)	WATER LEVEL	GRAPHIC LOG	ASTM SOIL TYPE	DESCRIPTION
												Ground Surface
0–1											SW	Well-graded SAND WITH GRAVEL: dark gray (5YR 4/1); wood chips at surface
1–4		48					4.6	0			SW	SAND WITH CLAY AND OCCASIONAL GRAVEL: dark yellowish brown (10YR 4/6); gravel up to 1-inch diameter
4–8		48									CL	CLAY WITH SAND AND OCCASIONAL GRAVEL: very dark gray (5Y 3/1); gravel up to 1-inch diameter
8–11		48					0	0			SC	CLAYEY SAND: dark yellowish brown (10YR 4/4); fine- to medium-grained; increasing sand content with depth
11–20		29, 36							▽		SC	CLAY WITH SAND AND OCCASIONAL GRAVEL: dark greenish gray (5G4/1); slightly moist; approximately 10% sand; gravel up to 1-inch diameter; increasing sand content to 30% from 12 to 15.5 feet
20												Total depth of boring = 20 feet

Tetra Tech EM Inc.

Log of Soil-Gas Boring: SG01C

Project: HPS Parcel E Nonstandard Data Gaps
Project No: G90160030301020711
Location: Parcel E IR-01/21 Landfill
Surface Elevation (feet): 20.64
Top of Casing Elevation (feet MSL): NA

Drilling Method: DIRECT-PUSH
Boring Started: 04/02/02
Completed: 04/02/02
Boring Depth (feet bgs): 16.00
Boring Diameter (inches): 2.00

Logged By: KATHY VANDENHEUVEL
Logging Consultant: TETRA TECH
Drilling Company: GREGG

DEPTH (FEET)	DRIVE INTERVAL	RECOVERY (IN)	BLOW COUNT	LAB SAMPLE	SOIL GAS SAMPLE ID	OVM (PPM)	VOCS (PPM)	METHANE (% BY VOLUME IN AIR)	WATER LEVEL	GRAPHIC LOG	ASTM SOIL TYPE	DESCRIPTION
0												Ground Surface
1											SW	Well-graded SAND WITH CLAY AND OCCASIONAL GRAVEL: grayish brown (10YR 5/2); very slightly moist; gravel up to 1-inch diameter
2		43										
3												SAND WITH OCCASIONAL GRAVEL; grayish brown (10YR 5/2); very slightly moist; fine- to medium-grained
4												
5				to								fine-
6		14									SP	
7				to	SG01SG003		1.1	50.3				fine-
8												
9												
10		12										
11												
12												
13					SG01SG004		7.6	15.1				SAND TO GRAVEL: dark gray (10YR 4/1); medium-grained; gravel up 0.3-inch diameter; with small pieces of wood; gravel increses with depth
14		48							▽		SP	
15												
16												Total depth of boring = 16 feet
17												
18												
19												
20												
21												
22												
23												
24												
25												
26												
27												
28												
29												
30												
31												
32												
33												
34												
35												

Tetra Tech EM Inc.

Log of Soil-Gas Boring: SG01D

Logged By: KATHY VANDENHEUVEL
Logging Consultant: TETRA TECH
Drilling Company: GREGG

Project: HPS Parcel E Nonstandard Data Gaps
Project No: G90160030301020711
Location: Parcel E IR-01/21 Landfill
Surface Elevation (feet): 21.14
Top of Casing Elevation (feet MSL): NA

Drilling Method: DIRECT-PUSH
Boring Started: 04/02/02
Completed: 04/02/02
Boring Depth (feet bgs): 16.00
Boring Diameter (inches): 2.00

DEPTH (FEET)	DRIVE INTERVAL	RECOVERY (IN)	BLOW COUNT	LAB SAMPLE	SOIL GAS SAMPLE ID	OVM (PPM)	VOCS (PPM)	METHANE (% BY VOLUME IN AIR)	WATER LEVEL	GRAPHIC LOG	ASTM SOIL TYPE	DESCRIPTION
0												Ground Surface
1–4		43									SP	SAND WITH CLAY AND GRAVEL: brown (10YR 5/3); very slightly moist; gravel up to 1-inch diameter
4–8		43			SG01SG006		22.8	43.3			SP	SAND WITH GRAVEL: grayish brown (10YR 5/2); very slightly moist; medium-grained; fine-grained gravel Thick dark sandy clay lens at 9.5 feet
8–11		43									SC	Well-graded CLAYEY SAND: reddish brown (5YR 4/4); with occasional gravel up to 1-inch diameter
11–13					SG01SG007		1.0	32.6			CL	CLAY WITH SAND AND OCCASIONAL GRAVEL: very dark gray (N31); gravel up to 1-inch diameter
13–16		29							▽		CL	CLAY: dark greenish gray (5GY 4/1)
16												Total depth of boring = 16 feet

Tetra Tech EM Inc.

Log of Soil-Gas Boring: SG01E

Logged By: KATHY VANDENHEUVEL
Logging Consultant: TETRA TECH
Drilling Company: GREGG

Project: HPS Parcel E Nonstandard Data Gaps
Project No: G90160030301020711
Location: Parcel E IR-01/21 Landfill
Surface Elevation (feet): 23.32
Top of Casing Elevation (feet MSL): NA

Drilling Method: DIRECT-PUSH
Boring Started: 04/04/02
Completed: 04/04/02
Boring Depth (feet bgs): 16.00
Boring Diameter (inches): 2.00

DEPTH (FEET)	DRIVE INTERVAL	RECOVERY (IN)	BLOW COUNT	LAB SAMPLE	SOIL GAS SAMPLE ID	OVM (PPM)	VOCS (PPM)	METHANE (% BY VOLUME IN AIR)	WATER LEVEL	GRAPHIC LOG	ASTM SOIL TYPE	DESCRIPTION
0												Ground Surface
1–3		41									SW	Well-graded SAND WITH OCCASIONAL GRAVEL: dark grayish brown (10YR 4/2); slightly moist; gravel up to 1-inch diameter
3–4											SP	SAND WITH OCCASIONAL GRAVEL: light olive gray (5Y 6/2); slightly moist; fine- to medium-grained; gravel up to 1-inch diameter
4–8		48					3.8	0			SP	SAND WITH CLAY AND OCCASIONAL GRAVEL: dark greenish gray (5GY 4/1) with black staining from 7.25 TO 75 feet; slightly moist; fine- to medium-grained; 10% clay; gravel up to 1-inch diameter; sand is serpentinite
8–12		48										
12–16		48			SG01SG008		5.5	0			SP	SAND: dark greenish gray (5GY 4/1); very dense; fine- to medium-grained; serpentinite in content; weathered bedrock
16												Total depth of boring = 16 feet

Tetra Tech EM Inc.

Log of Soil-Gas Boring: SG02

Logged By: KATHY VANDENHEUVEL
Logging Consultant: TETRA TECH
Drilling Company: GREGG

Project: HPS Parcel E Nonstandard Data Gaps
Project No: G90160030301020711
Location: Parcel E IR-01/21 Landfill
Surface Elevation (feet): 17.79
Top of Casing Elevation (feet MSL): NA

Drilling Method: DIRECT-PUSH
Boring Started: 04/04/02
Completed: 04/04/02
Boring Depth (feet bgs): 16.00
Boring Diameter (inches): 2.00

DEPTH (FEET)	DRIVE INTERVAL	RECOVERY (IN)	BLOW COUNT	LAB SAMPLE	SOIL GAS SAMPLE ID	OVM (PPM)	VOCS (PPM)	METHANE (% BY VOLUME IN AIR)	WATER LEVEL	GRAPHIC LOG	ASTM SOIL TYPE	DESCRIPTION
												Ground Surface
0–1											CL	SANDY CLAY: dark grayish brown (10YR 4/2); with organic matter (grass)
1–4		38									CL	SANDY CLAY WITH GRAVEL: very dark gray (10YR 3/1); 20% gravel (up to 1-inch diameter)
4–8		24			SG02SG009		1.1	67.4				
8–12		19									CL	SANDY CLAY WITH GRAVEL: dark greenish gray (5BG4/1); 20% gravel; 10% to 20% well-graded sand
12–16		19					2.4	65.3			SW	Well-graded SAND WITH GRAVEL AND CLAY: brown (10YR 4/2); saturated at 13 feet; 10% gravel and clay
16												Total depth of boring = 16 feet

Tetra Tech EM Inc.

Log of Soil-Gas Boring: SG02A

Logged By: KATHY VANDENHEUVEL
Logging Consultant: TETRA TECH
Drilling Company: GREGG

Project: HPS Parcel E Nonstandard Data Gaps
Project No: G90160030301020711
Location: Parcel E IR-01/21 Landfill
Surface Elevation (feet): 17.64
Top of Casing Elevation (feet MSL): NA

Drilling Method: DIRECT-PUSH
Boring Started: 03/28/02
Completed: 03/28/02
Boring Depth (feet bgs): 16.00
Boring Diameter (inches): 2.00

DEPTH (FEET)	DRIVE INTERVAL	RECOVERY (IN)	BLOW COUNT	LAB SAMPLE	SOIL GAS SAMPLE ID	OVM (PPM)	VOCS (PPM)	METHANE (% BY VOLUME IN AIR)	WATER LEVEL	GRAPHIC LOG	ASTM SOIL TYPE	DESCRIPTION
0												Ground Surface
1												SANDY CLAY: dark grayish brown (10YR 4/2); moist; 30% fine- to medium-grained sand
2		24										
3											CL	
4												
5												
6		19										
7					SG02SG001		0.4	54.0			SP	
8												CLAYEY SAND WITH OCCASIONAL SERPENTINITE GRAVEL: greenish gray (5G 5/1); slightly moist
9											SL	
10		24										Increasing moisture content; increasing clay content to sandy clay
11											SP	
12					SG02SG002		0.7	60.1				CLAYEY SAND: greenish gray (5G 5/1); slightly moist
13												Increasing moisture content
14		24									SP	
15												
16												Total depth of boring = 16 feet
17												
18												
19												
20												
21												
22												
23												
24												
25												
26												
27												
28												
29												
30												
31												
32												
33												
34												
35												

Tetra Tech EM Inc.

Log of Soil-Gas Boring: SG02B

Logged By: KATHY VANDENHEUVEL
Logging Consultant: TETRA TECH
Drilling Company: GREGG

Project: HPS Parcel E Nonstandard Data Gaps
Project No: G90160030301020711
Location: Parcel E IR-01/21 Landfill
Surface Elevation (feet): 20.44
Top of Casing Elevation (feet MSL): NA

Drilling Method: DIRECT-PUSH
Boring Started: 04/02/02
Completed: 04/02/02
Boring Depth (feet bgs): 16.00
Boring Diameter (inches): 2.00

DEPTH (FEET)	DRIVE INTERVAL	RECOVERY (IN)	BLOW COUNT	LAB SAMPLE	SOIL GAS SAMPLE ID	OVM (PPM)	VOCS (PPM)	METHANE (% BY VOLUME IN AIR)	WATER LEVEL	GRAPHIC LOG	ASTM SOIL TYPE	DESCRIPTION
0												Ground Surface
1–3		38									CL	SANDY CLAY WITH OCCASIONAL GRAVEL: dark gray (7.5YR 4/1); very slight moist; gravel up to 1-inch diameter
4–8		48			SG02SG003		5.4	0			CL	CLAY: very dark gray (N 3/); moist
9–12		46										
13–16		24					3.9	0			GP GP	GRAVEL WITH CLAY: weak red(10R 4/3); gravel up to 1-inch diameter GRAVEL WITH CLAY AND SAND: olive brown (2.5Y 4/3); moist to saturated at 15 feet; <10% clay
17–35												Total depth of boring = 16 feet

Tetra Tech EM Inc.

Log of Soil-Gas Boring: SG02C

Logged By: KATHY VANDENHEUVEL
Logging Consultant: TETRA TECH
Drilling Company: GREGG

Project: HPS Parcel E Nonstandard Data Gaps
Project No: G90160030301020711
Location: Parcel E IR-01/21 Landfill
Surface Elevation (feet): 19.86
Top of Casing Elevation (feet MSL): NA

Drilling Method: DIRECT-PUSH
Boring Started: 04/02/02
Completed: 04/02/02
Boring Depth (feet bgs): 16.00
Boring Diameter (inches): 2.00

DEPTH (FEET)	DRIVE INTERVAL	RECOVERY (IN)	BLOW COUNT	LAB SAMPLE	SOIL GAS SAMPLE ID	OVM (PPM)	VOCS (PPM)	METHANE (% BY VOLUME IN AIR)	WATER LEVEL	GRAPHIC LOG	ASTM SOIL TYPE	DESCRIPTION
												Ground Surface
0–1											GP	GRAVEL WITH SAND: gravel up to 1-inch diameter
1–3		48									SP	SAND WITH OCCASIONAL GRAVEL: grayish brown (10YR 5/2); gravel up to 1-inch diameter
3–4											SC	SANDY CLAY WITH OCCASIONAL GRAVEL: reddish brown (5YR 4/4); gravel up to 1-inch diameter
4–7		48			SG02SG004						SC	Color changes to dark greenish gray (5GY 4/1); decrease in sand content with depth
7–12		24					0	0.5			CL	CLAY WITH OCCASIONAL GRAVEL: very dark gray (N3/); gravel up to 1-inch diameter
12–15		48			SG02SG005		0	2.4			CL	SANDY CLAY WITH GRAVEL: dark greenish gray (5GY 4/1)
15–16												CLAY WITH SAND: olive gray (5Y 4/2); 10% sand

Total depth of boring = 16 feet

Tetra Tech EM Inc.

Log of Soil-Gas Boring: SG02E

Logged By: KATHY VANDENHEUVEL
Logging Consultant: TETRA TECH
Drilling Company: GREGG

Project: HPS Parcel E Nonstandard Data Gaps
Project No: G90160030301020711
Location: Parcel E IR-01/21 Landfill
Surface Elevation (feet): 18.89
Top of Casing Elevation (feet MSL): NA

Drilling Method: DIRECT-PUSH
Boring Started: 04/02/02
Completed: 04/02/02
Boring Depth (feet bgs): 16.00
Boring Diameter (inches): 2.00

DEPTH (FEET)	DRIVE INTERVAL	RECOVERY (IN)	BLOW COUNT	LAB SAMPLE	SOIL GAS SAMPLE ID	OVM (PPM)	VOCS (PPM)	METHANE (% BY VOLUME IN AIR)	WATER LEVEL	GRAPHIC LOG	ASTM SOIL TYPE	DESCRIPTION
												Ground Surface
0–2		36									SP	SAND WITH OCCASIONAL GRAVEL: olive brown (2.5Y 4/3); very slightly moist; fine- to medium-grained; organic matter in top few inches
2–3											SC	CLAYEY SAND: gray(2.5Y 5/1); very slightly moist
4–8		31			SG02SG006		1.2	66.6			SP	SAND WITH GRAVEL: DARK GRAYISH BROWN (2.5Y 4/2); very slight moist; fine- to medium-grainedMOIST. (2.5Y 4/2) DARK GREYISH BROWN.
8–12		36					2.3	57.0				
12–16		38			SG02SG007				▽		SP	SAND WITH CLAY: dark gray (10YR 4/1); saturated at 15 feet; fine- to medium-grained
												Total depth of boring = 16 feet

Tetra Tech EM Inc.

Log of Soil-Gas Boring: SG02F

Logged By: KATHY VANDENHEUVEL
Logging Consultant: TETRA TECH
Drilling Company: GREGG

Project: HPS Parcel E Nonstandard Data Gaps
Project No: G90160030301020711
Location: Parcel E IR-01/21 Landfill
Surface Elevation (feet): 20.15
Top of Casing Elevation (feet MSL): NA

Drilling Method: DIRECT-PUSH
Boring Started: 04/03/02
Completed: 04/03/02
Boring Depth (feet bgs): 16.00
Boring Diameter (inches): 2.00

DEPTH (FEET)	DRIVE INTERVAL	RECOVERY (IN)	BLOW COUNT	LAB SAMPLE	SOIL GAS SAMPLE ID	OVM (PPM)	VOCS (PPM)	METHANE (% BY VOLUME IN AIR)	WATER LEVEL	GRAPHIC LOG	ASTM SOIL TYPE	DESCRIPTION
												Ground Surface
0–4		43									SW	SAND WITH GRAVEL AND CLAY: dark gray (10YR 4/1); slightly moist; 20% gravel; 10% clay
4–8		48					0	0.2			SC	SANDY CLAY: dark grayish brown (10YR 4/2); slightly moist DARK GREYISH
8–12		46									CL	CLAY WITH SAND: dark greenish gray (5G 4/1); black lens from 11 to 11.5 feet; occasional gravel
12–16		48					0	1.1	ND		SW	Well-graded SAND WITH GRAVEL AND CLAY: brown (10YR 4/2); 30% gravel; 10% clay

Total depth of boring = 16 feet

Tetra Tech EM Inc.

Log of Soil-Gas Boring: SG02G

Project: HPS Parcel E Nonstandard Data Gaps
Project No: G90160030301020711
Location: Parcel E IR-01/21 Landfill
Surface Elevation (feet):
Top of Casing Elevation (feet MSL): NA

Drilling Method: DIRECT-PUSH
Boring Started: 04/05/02
Completed: 04/05/02
Boring Depth (feet bgs): 16.00
Boring Diameter (inches): 2.00

Logged By: KATHY VANDENHEUVEL
Logging Consultant: TETRA TECH
Drilling Company: GREGG

DEPTH (FEET)	DRIVE INTERVAL	RECOVERY (IN)	BLOW COUNT	LAB SAMPLE	SOIL GAS SAMPLE ID	OVM (PPM)	VOCS (PPM)	METHANE (% BY VOLUME IN AIR)	WATER LEVEL	GRAPHIC LOG	ASTM SOIL TYPE	DESCRIPTION
0												Ground Surface
1											SW	Well-graded SAND WITH GRAVEL: very dark grayish brown (10YR 3/2); 10% gravel (up to 1-inch diameter)
2		46									SP	SAND WITH GRAVEL: dark yellowish brown (10YR 4/4); fine- to medium-grained
3											CL	
4											SP	CLAY WITH SAND AND OCCASIONAL GRAVEL: dark gray (10YR 4/1)
5					SG02SG011		0	0				
6		48									CL	SAND WITH GRAVEL: yellowish red (5YR 4/6); slightly moist; 20% gravel; increase to 20% clay from 4 to 5 feet
7												
8											SP	CLAY WITH SAND: black (10YR 2/1); 10% sand
9												
10		43									CL	SAND WITH CLAY: dark grayish brown (10YR 4/2); fine to medium-grained; 10% clay
11												
12											CL	SANDY CLAY WITH SERPENTENITE GRAVEL: dark gray (5Y 4/1)
13												
14		34									CL	CLAY WITH OCCASIONAL GRAVEL
15					SG02SG012		0	0	ND		CL	SANDY CLAY WITH OCCASIONAL GRAVEL: strong brown (7.5YR 4/3)
16												CLAY WITH SAND: dark greenish gray (5GY 4/1); 10% sand
17												Total depth of boring = 16 feet
18												
19												
20												
21												
22												
23												
24												
25												
26												
27												
28												
29												
30												
31												
32												
33												
34												
35												

Tetra Tech EM Inc.

Log of Soil-Gas Boring: SG03

Logged By: KATHY VANDENHEUVEL
Logging Consultant: TETRA TECH
Drilling Company: GREGG

Project: HPS Parcel E Nonstandard Data Gaps
Project No: G90160030301020711
Location: Parcel E IR-01/21 Landfill
Surface Elevation (feet): 18.17
Top of Casing Elevation (feet MSL): NA

Drilling Method: DIRECT-PUSH
Boring Started: 04/04/02
Completed: 04/04/02
Boring Depth (feet bgs): 16.00
Boring Diameter (inches): 2.00

DEPTH (FEET)	DRIVE INTERVAL	RECOVERY (IN)	BLOW COUNT	LAB SAMPLE	SOIL GAS SAMPLE ID	OVM (PPM)	VOCS (PPM)	METHANE (% BY VOLUME IN AIR)	WATER LEVEL	GRAPHIC LOG	ASTM SOIL TYPE	DESCRIPTION
												Ground Surface
0											CL	SANDY CLAY: dark grayish brown (10YR 4/2); with organic matter (grass)
1											CL	
2		36										SANDY CLAY WITH GRAVEL: dark gray (10YR 4/1); 10% gravel (up to 1-inch diameter)
3												
4												CLAYEY SAND WITH GRAVEL: dark bluish gray (5B 4/1); 30% clay; 25% gravel
5												
6		29										
7					SG03SG005		0.6	69.7				
8												
9											SC	
10		19										
11												
12												
13					SG03SG006		0.4	60.0				
14		24										
15											SW/SC	Well-graded SAND WITH CLAY AND GRAVEL: brown (10YR 4/2); saturated
16												
17												Total depth of boring = 16 feet
18												
19												
20												
21												
22												
23												
24												
25												
26												
27												
28												
29												
30												
31												
32												
33												
34												
35												

Tetra Tech EM Inc.

Log of Soil-Gas Boring: SG03A

Logged By: KATHY VANDENHEUVEL
Logging Consultant: TETRA TECH
Drilling Company: GREGG

Project: HPS Parcel E Nonstandard Data Gaps
Project No: G90160030301020711
Location: Parcel E IR-01/21 Landfill
Surface Elevation (feet): 19.39
Top of Casing Elevation (feet MSL): NA

Drilling Method: DIRECT-PUSH
Boring Started: 04/02/02
Completed: 04/02/02
Boring Depth (feet bgs): 16.00
Boring Diameter (inches): 2.00

DEPTH (FEET)	DRIVE INTERVAL	RECOVERY (IN)	BLOW COUNT	LAB SAMPLE	SOIL GAS SAMPLE ID	OVM (PPM)	VOCS (PPM)	METHANE (% BY VOLUME IN AIR)	WATER LEVEL	GRAPHIC LOG	ASTM SOIL TYPE	DESCRIPTION
0												Ground Surface
1												3-inch asphalt
2		36										SAND WITH CLAY AND OCCASIONAL GRAVEL: BROWN (7.5YR 4/2); moist; gravel up to 1-cm diameter; clay content increases to ~10% from 7 to 8 feet; gravel content increases from 8 to 12 feet; wood fragements (2 inches) present at 10 feet
3												
4												
5												
6		36										
7					SG03SG001		1.4	78.6				
8											SP/SC	
9												
10		41										
11												
12												
13												
14		41			SG03SG002		1.5	83.9				
15												
16												Total depth of boring = 16 feet
17												
18												
19												
20												
21												
22												
23												
24												
25												
26												
27												
28												
29												
30												
31												
32												
33												
34												
35												

Tetra Tech EM Inc.

Log of Soil-Gas Boring: SG03B

Project: HPS Parcel E Nonstandard Data Gaps
Project No: G90160030301020711
Location: Parcel E IR-01/21 Landfill
Surface Elevation (feet): 19.50
Top of Casing Elevation (feet MSL): NA

Drilling Method: DIRECT-PUSH
Boring Started:
Completed:
Boring Depth (feet bgs): 12.00
Boring Diameter (inches): 2.00

Logged By: KATHY VANDENHEUVEL
Logging Consultant: TETRA TECH
Drilling Company: GREGG

DEPTH (FEET)	DRIVE INTERVAL	RECOVERY (IN)	BLOW COUNT	LAB SAMPLE	SOIL GAS SAMPLE ID	OVM (PPM)	VOCS (PPM)	METHANE (% BY VOLUME IN AIR)	WATER LEVEL	GRAPHIC LOG	ASTM SOIL TYPE	DESCRIPTION
0												Ground Surface
1												Well-graded SAND WITH OCCASIONAL GRAVEL: dark greenish gray (5GY 4/1); fine- to coarse-grained; gravel up to 1-inch diameter
2		14										Poor recovery due to debris; groundwater not encountered Borehole terminated at 12 feet due to elevated methane readings at borehole opening (>100% LEL)
3												
4												
5												
6		5									SW	
7												
8												
9												
10		6										
11												
12												Total depth of boring = 12 feet
13												
14												
15												
16												
17												
18												
19												
20												
21												
22												
23												
24												
25												
26												
27												
28												
29												
30												
31												
32												
33												
34												
35												

Tetra Tech EM Inc.

Log of Soil-Gas Boring: SG03C

Logged By: KATHY VANDENHEUVEL
Logging Consultant: TETRA TECH
Drilling Company: GREGG

Project: HPS Parcel E Nonstandard Data Gaps
Project No: G90160030301020711
Location: Parcel E IR-01/21 Landfill
Surface Elevation (feet): 19.78
Top of Casing Elevation (feet MSL): NA

Drilling Method: DIRECT-PUSH
Boring Started: 04/03/02
Completed: 04/03/02
Boring Depth (feet bgs): 16.00
Boring Diameter (inches): 2.00

DEPTH (FEET)	DRIVE INTERVAL	RECOVERY (IN)	BLOW COUNT	LAB SAMPLE	SOIL GAS SAMPLE ID	OVM (PPM)	VOCS (PPM)	METHANE (% BY VOLUME IN AIR)	WATER LEVEL	GRAPHIC LOG	ASTM SOIL TYPE	DESCRIPTION
0												Ground Surface
1												4-inch asphalt
2		38										Well-graded CLAYEY SAND WITH GRAVEL: dark greenish gray (5GY 4/1); slightly moist; 30% clay; 15% gravel (up to 1-inch diameter)
3												
4											SC	
5												
6		36										
7					SG03SG003		0	34.8				
8												CLAY WITH SAND: dark greenish gray (5G 4/1); 10% sand
9												
10		36									CL	
11												
12												GRAVELLY CLAY: strong brown (10YR 4/6); moist; gravel up to 0.5-inch diameter
13												
14		31			SG03SG004		0.4	8.3			CL	
15												
16												Total depth of boring = 16 feet
17												
18												
19												
20												
21												
22												
23												
24												
25												
26												
27												
28												
29												
30												
31												
32												
33												
34												
35												

Tetra Tech EM Inc.

Log of Soil-Gas Boring: SG03D

Logged By: KATHY VANDENHEUVEL
Logging Consultant: TETRA TECH
Drilling Company: GREGG

Project: HPS Parcel E Nonstandard Data Gaps
Project No: G90160030301020711
Location: Parcel E IR-01/21 Landfill
Surface Elevation (feet): 19.52
Top of Casing Elevation (feet MSL): NA

Drilling Method: DIRECT-PUSH
Boring Started: 04/05/02
Completed: 04/05/02
Boring Depth (feet bgs): 16.00
Boring Diameter (inches): 2.00

DEPTH (FEET)	DRIVE INTERVAL	RECOVERY (IN)	BLOW COUNT	LAB SAMPLE	SOIL GAS SAMPLE ID	OVM (PPM)	VOCS (PPM)	METHANE (% BY VOLUME IN AIR)	WATER LEVEL	GRAPHIC LOG	ASTM SOIL TYPE	DESCRIPTION
0												Ground Surface
1											GP	GRAVEL WITH SAND: gray (N3/); very slight moist; gravel up to 0.5-inch diameter
2		36										
3											CL	CLAY WITH GRAVEL AND SAND: dark grayish brown (2.5Y 4/2); 15% gravel; 10% sand
4												
5												SAND WITH GRAVEL: olive gray (5Y 5/2); saturated at 15 feet; 45% gravel (up to 1-inch diameter)
6		36										
7					SG03SG007		0	0				
8												
9											SP	
10		0										
11												
12												
13												
14		24			SG03SG008		0.7	0				
15											SP/SC/ SP	Poorly graded SAND WITH CLAY: dark grayish brown (2.5Y 4/2); 10% clay; 10% gravel; decrease in clay content from 15 to 16 feet
16												
17												Total depth of boring = 16 feet
18												
19												
20												
21												
22												
23												
24												
25												
26												
27												
28												
29												
30												
31												
32												
33												
34												
35												

Tetra Tech EM Inc.

Log of Soil-Gas Boring: SG04

Logged By: KATHY VANDENHEUVEL
Logging Consultant: TETRA TECH
Drilling Company: GREGG

Project: HPS Parcel E Nonstandard Data Gaps
Project No: G90160030301020711
Location: Parcel E IR-01/21 Landfill
Surface Elevation (feet): 16.61
Top of Casing Elevation (feet MSL): NA

Drilling Method: DIRECT-PUSH
Boring Started: 03/27/02
Completed: 03/27/02
Boring Depth (feet bgs): 16.00
Boring Diameter (inches): 2.00

DEPTH (FEET)	DRIVE INTERVAL	RECOVERY (IN)	BLOW COUNT	LAB SAMPLE	SOIL GAS SAMPLE ID	OVM (PPM)	VOCS (PPM)	METHANE (% BY VOLUME IN AIR)	WATER LEVEL	GRAPHIC LOG	ASTM SOIL TYPE	DESCRIPTION
0												Ground Surface
1											CL	CLAY WITH SAND: dusky red (2.5YR 4/2); fine sand
2		36									CL	SANDY CLAY WITH GRAVEL: dark gray (7.5 YR 4/1); fine- to medium-grained sand
3					SG04SG001		0	68.4			CL	CLAY WITH SAND: brown (7.5 YR 4/4); slight moist; fine- to medium-grained sand
4												
5												
6		36									CL	SANDY CLAY WITH GRAVEL: dark gray (7.5 YR 4/1); slight moist 30 to 40% fine- to medium-grained sand
7												
8												
9					SG04SG002		0	16.4			SC	Increase in sand content to a CLAYEY SAND: greenish gray (5G/5/i)L slightly moist increasing to moist
10		29										CLAY WITH SAND: very dark grayish brown (10YR 3/2); moist; 10% fine-grained sand
11												
12												
13											CL	
14		24										
15												
16												Total depth of boring = 16 feet
17												
18												
19												
20												
21												
22												
23												
24												
25												
26												
27												
28												
29												
30												
31												
32												
33												
34												
35												

Tetra Tech EM Inc.

Log of Soil-Gas Boring: SG04A

Logged By: KATHY VANDENHEUVEL
Logging Consultant: TETRA TECH
Drilling Company: GREGG

Project: HPS Parcel E Nonstandard Data Gaps
Project No: G90160030301020711
Location: Parcel E IR-01/21 Landfill
Surface Elevation (feet): 16.37
Top of Casing Elevation (feet MSL): NA

Drilling Method: DIRECT-PUSH
Boring Started: 04/03/02
Completed: 04/03/02
Boring Depth (feet bgs): 16.00
Boring Diameter (inches): 2.00

DEPTH (FEET)	DRIVE INTERVAL	RECOVERY (IN)	BLOW COUNT	LAB SAMPLE	SOIL GAS SAMPLE ID	OVM (PPM)	VOCS (PPM)	METHANE (% BY VOLUME IN AIR)	WATER LEVEL	GRAPHIC LOG	ASTM SOIL TYPE	DESCRIPTION
0												Ground Surface
1												4-inch asphalt
2		43										Well-graded SAND WITH GRAVEL: dark gray (10YR 4/1); 30% gravel; 10% clay Clay content increases to 25% from 4 to 6 feet
3												
4											SW	
5												
6		29			SG04SG003		0.6	63.0				
7												
8												Increase in gravel from 8 to 12 feet; wood pieces in shoe; 30% gravel <10% clay
9												
10		14									SW	
11					SG04SG005		1.0	32.8				
12												Color changes to very dark brown (10YR 4/2)
13												
14		19									SW	
15											SW	
16												SAND WITH GRAVEL: (10YR 2/1); saturated
17												Total depth of boring = 16 feet
18												
19												
20												
21												
22												
23												
24												
25												
26												
27												
28												
29												
30												
31												
32												
33												
34												
35												

Tetra Tech EM Inc.

Log of Soil-Gas Boring: SG05A

Logged By: KATHY VANDENHEUVAL
Logging Consultant: TETRA TECH
Drilling Company: GREGG

Project: HPS Parcel E Nonstandard Data Gaps
Project No: G90160030301020711
Location: Parcel E IR-01/21 Landfill
Surface Elevation (feet): 13.69
Top of Casing Elevation (feet MSL): NA

Drilling Method: DIRECT-PUSH
Boring Started: 03/29/02
Completed: 03/29/02
Boring Depth (feet bgs): 12.00
Boring Diameter (inches): 2.00

DEPTH (FEET)	DRIVE INTERVAL	RECOVERY (IN)	BLOW COUNT	LAB SAMPLE	SOIL GAS SAMPLE ID	OVM (PPM)	VOCS (PPM)	METHANE (% BY VOLUME IN AIR)	WATER LEVEL	GRAPHIC LOG	ASTM SOIL TYPE	DESCRIPTION
0												Ground Surface
0–1											SC	Well-graded CLAYEY SAND: dark gray (10YR 4/1); moist
1–3		34									CL	SANDY CLAY WITH OCCASIONAL GRAVEL: dark gray (5Y 4/1)
4–8		43			SG05SG001		0	74.7				Color changes to dark gray (N 4/1); sand content increases with depth
8–12		34									CL	No field screening sample collected at 9.0 feet due to refusal
12												Total depth of boring = 12 feet

Tetra Tech EM Inc.

Log of Soil-Gas Boring: SG05B

Logged By: KATHY VANDENHEUVEL
Logging Consultant: TETRA TECH
Drilling Company: GREGG

Project: HPS Parcel E Nonstandard Data Gaps
Project No: G90160030301020711
Location: Parcel E IR-01/21 Landfill
Surface Elevation (feet): 14.17
Top of Casing Elevation (feet MSL): NA

Drilling Method: DIRECT-PUSH
Boring Started: 03/29/02
Completed: 03/29/02
Boring Depth (feet bgs): 12.00
Boring Diameter (inches): 2.00

DEPTH (FEET)	DRIVE INTERVAL	RECOVERY (IN)	BLOW COUNT	LAB SAMPLE	SOIL GAS SAMPLE ID	OVM (PPM)	VOCS (PPM)	METHANE (% BY VOLUME IN AIR)	WATER LEVEL	GRAPHIC LOG	ASTM SOIL TYPE	DESCRIPTION
0												Ground Surface
1												Well-graded SANDY CLAY WITH OCCASIONAL GRAVEL: dark gray (10YR 4/1); slightly moist; >30% sand; gravel up to 1-inch diameter; occasional reddish brown clay lenses; sandy throughout with sand content increasing from 3 to 4 feet
2		36										
3												
4					SG05SG002		0	59.8			CL	
5												
6		38										
7												
8					SG05SG003						SC	CLAYEY SAND: brown (10YR 4/3); slightly moist; fine to medium sand
9							0	51.1				
10		24									CL	SANDY CLAY WITH OCCASIONAL SERPENTINITE GRAVEL: saturated at 11 feet
11												
12												Total depth of boring = 12 feet
13												
14												
15												
16												
17												
18												
19												
20												
21												
22												
23												
24												
25												
26												
27												
28												
29												
30												
31												
32												
33												
34												
35												

Tetra Tech EM Inc.

Log of Soil-Gas Boring: SG05C

Logged By: KATHY VANDENHEUVEL
Logging Consultant: TETRA TECH
Drilling Company: GREGG

Project: HPS Parcel E Nonstandard Data Gaps
Project No: G90160030301020711
Location: Parcel E IR-01/21 Landfill
Surface Elevation (feet): 15.63
Top of Casing Elevation (feet MSL): NA

Drilling Method: DIRECT-PUSH
Boring Started: 03/29/02
Completed: 03/29/02
Boring Depth (feet bgs): 12.00
Boring Diameter (inches): 2.00

DEPTH (FEET)	DRIVE INTERVAL	RECOVERY (IN)	BLOW COUNT	LAB SAMPLE	SOIL GAS SAMPLE ID	OVM (PPM)	VOCS (PPM)	METHANE (% BY VOLUME IN AIR)	WATER LEVEL	GRAPHIC LOG	ASTM SOIL TYPE	DESCRIPTION
0												Ground Surface
1												SANDY CLAY WITH OCCASIONAL SERPENTINITE GRAVEL: dark gray (10YR 4/1); slightly moist; well-graded sand; green tint to soil (serpentinite)
2		36										
3												
4					SG05SG004		0	43.8				
5												
6		36									CL	
7												Moisture content increases to moist at 6 feet
8												
9					SG05SG005		0	39.4				
10		36										
11												
12												
13												Soils become saturated at 10 feet
14												Total depth of boring = 12 feet
15												
16												
17												
18												
19												
20												
21												
22												
23												
24												
25												
26												
27												
28												
29												
30												
31												
32												
33												
34												
35												

Tetra Tech EM Inc.

Log of Soil-Gas Boring: SG05D

Logged By: KATHY VANDENHEUVEL
Logging Consultant: TETRA TECH
Drilling Company: GREGG

Project: HPS Parcel E Nonstandard Data Gaps
Project No: G90160030301020711
Location: Parcel E IR-01/21 Landfill
Surface Elevation (feet): 16.56
Top of Casing Elevation (feet MSL): NA

Drilling Method: DIRECT-PUSH
Boring Started: 03/29/02
Completed: 03/29/02
Boring Depth (feet bgs): 16.00
Boring Diameter (inches): 2.00

DEPTH (FEET)	DRIVE INTERVAL	RECOVERY (IN)	BLOW COUNT	LAB SAMPLE	SOIL GAS SAMPLE ID	OVM (PPM)	VOCS (PPM)	METHANE (% BY VOLUME IN AIR)	WATER LEVEL	GRAPHIC LOG	ASTM SOIL TYPE	DESCRIPTION
0												Ground Surface
1											CL	SANDY CLAY WITH OCCASIONAL GRAVEL: dark greenish gray (5BG 4/1); slightly moist; well sorted
2		43									SC	CLAYEY SAND: brown (10YR 5/3); slightly moist; fine- to medium-grained
3												
4												SANDY CLAY W/ OCCASIONAL SERPENTINITE GRAVEL: saturated at 12 feet
5							2.6	0				
6		48										
7												
8											CL	
9												
10		24					2.9	0.3				
11									▽			
12												
13												
14		29										
15											CL	Color changes to dark yellowish brown (10YR 4/6)
16												Total depth of boring = 16 feet
17												
18												
19												
20												
21												
22												
23												
24												
25												
26												
27												
28												
29												
30												
31												
32												
33												
34												
35												

Tetra Tech EM Inc.

Log of Soil-Gas Boring: SG06

Logged By: REBECCA LESHER
Logging Consultant: TETRA TECH
Drilling Company: GREGG

Project: HPS Parcel E Nonstandard Data Gaps
Project No: G90160030301020711
Location: Parcel E IR-01/21 Landfill
Surface Elevation (feet): 17.21
Top of Casing Elevation (feet MSL): NA

Drilling Method: DIRECT-PUSH
Boring Started: 03/26/02
Completed: 03/26/02
Boring Depth (feet bgs): 16.00
Boring Diameter (inches): 2.00

DEPTH (FEET)	DRIVE INTERVAL	RECOVERY (IN)	BLOW COUNT	LAB SAMPLE	SOIL GAS SAMPLE ID	OVM (PPM)	VOCS (PPM)	METHANE (% BY VOLUME IN AIR)	WATER LEVEL	GRAPHIC LOG	ASTM SOIL TYPE	DESCRIPTION
0												Ground Surface
1											SC	CLAYEY SAND: very dark grayish brown (2.5Y 3/2); slightly moist; fine- to medium-grained, subangular to subrounded sand
2		36										
3											CL	CLEAN CLAY: reddish brown (3.5Y 4/4); 5 to 10% fine sand
4												
5												Color changtes to very dark grayish brown (2.5Y 3/2); sand content increases
6		48										
7					SG06SG001		0	45.9				Sand content decreases to about 20%
8											SC	Well-graded CLAYEY SAND WITH GRAVEL: very dark gray (N3/); slightly moist; sand and gravel are serpentinite; gravel up to 1-inch diameter; no staining
9												
10		24										
11												
12												
13												
14		24										
15											CL	CLEAN CLAY WITH SAND: olive brown (2.5Y 4/3); saturated; about 10% fine-grained sand
16												
17												Total depth of boring = 16 feet
18												
19												
20												
21												
22												
23												
24												
25												
26												
27												
28												
29												
30												
31												
32												
33												
34												
35												

Tetra Tech EM Inc.

Log of Soil-Gas Boring: SG06A

Logged By: KATHY VANDENHEUVEL
Logging Consultant: TETRA TECH
Drilling Company: GREGG

Project: HPS Parcel E Nonstandard Data Gaps
Project No: G90160030301020711
Location: Parcel E IR-01/21 Landfill
Surface Elevation (feet): 14.42
Top of Casing Elevation (feet MSL): NA

Drilling Method: DIRECT-PUSH
Boring Started: 03/27/02
Completed: 03/27/02
Boring Depth (feet bgs): 12.00
Boring Diameter (inches): 2.00

DEPTH (FEET)	DRIVE INTERVAL	RECOVERY (IN)	BLOW COUNT	LAB SAMPLE	SOIL GAS SAMPLE ID	OVM (PPM)	VOCS (PPM)	METHANE (% BY VOLUME IN AIR)	WATER LEVEL	GRAPHIC LOG	ASTM SOIL TYPE	DESCRIPTION
0												Ground Surface
1												Well-graded SANDY CLAY WITH SERPENTINITE: dark grayish brown (10YR 4/2); very slightly moist; occasional gravel
2		38										
3												Becomes saturated at 8.5 feet
4												
5					SG06SG002		0	50.0				
6		36									CL	
7												
8												
9									▽			
10		24										
11												
12												Total depth of boring = 12 feet
13												
14												
15												
16												
17												
18												
19												
20												
21												
22												
23												
24												
25												
26												
27												
28												
29												
30												
31												
32												
33												
34												
35												

Tetra Tech EM Inc.

Log of Soil-Gas Boring: SG06B

Logged By: KATHY VANDENHEUVEL
Logging Consultant: TETRA TECH
Drilling Company: GREGG

Project: HPS Parcel E Nonstandard Data Gaps
Project No: G90160030301020711
Location: Parcel E IR-01/21 Landfill
Surface Elevation (feet): 14.05
Top of Casing Elevation (feet MSL): NA

Drilling Method: DIRECT-PUSH
Boring Started: 03/27/02
Completed: 03/27/02
Boring Depth (feet bgs): 12.00
Boring Diameter (inches): 2.00

DEPTH (FEET)	DRIVE INTERVAL	RECOVERY (IN)	BLOW COUNT	LAB SAMPLE	SOIL GAS SAMPLE ID	OVM (PPM)	VOCS (PPM)	METHANE (% BY VOLUME IN AIR)	WATER LEVEL	GRAPHIC LOG	ASTM SOIL TYPE	DESCRIPTION
0												Ground Surface
1												Well-graded SANDY CLAY: dark gray (10YR /1) 4; slightly moist; with occasional gravel
2		38										
3												
4												
5					SG06SG003		0	5.0				
6		48									CL	
7												
8												
9									▽			Serpentinite SANDY CLAY layer at 7 feet: greenish gray (5G 6/1); moisture content increases
10		29										
11												
12												Total depth of boring = 12 feet
13												
14												
15												
16												
17												
18												
19												
20												
21												
22												
23												
24												
25												
26												
27												
28												
29												
30												
31												
32												
33												
34												
35												

Tetra Tech EM Inc.

Log of Soil-Gas Boring: SG06C

Logged By: KATHY VANDENHEUVEL
Logging Consultant: TETRA TECH
Drilling Company: GREGG

Project: HPS Parcel E Nonstandard Data Gaps
Project No: G90160030301020711
Location: Parcel E IR-01/21 Landfill
Surface Elevation (feet): 15.52
Top of Casing Elevation (feet MSL): NA

Drilling Method: DIRECT-PUSH
Boring Started: 03/28/02
Completed: 03/28/02
Boring Depth (feet bgs): 12.00
Boring Diameter (inches): 2.00

DEPTH (FEET)	DRIVE INTERVAL	RECOVERY (IN)	BLOW COUNT	LAB SAMPLE	SOIL GAS SAMPLE ID	OVM (PPM)	VOCS (PPM)	METHANE (% BY VOLUME IN AIR)	WATER LEVEL	GRAPHIC LOG	ASTM SOIL TYPE	DESCRIPTION
0												Ground Surface
1												Well-graded SANDY CLAY: dark gray (10YR 4/1); slightly moist; with occasional gravel; 2-inch-thick sand lens at 3.5 feet
2		43										
3												
4											CL	
5					SG06SG004		1.6	6.5				
6		29										
7												Moisture content increases at 6 feet
8												
9							1.3	0				SANDY CLAY: brown (7.5YR 4/3); 30% fine- to medium-grained snd
10		38							▽		CL	
11												
12												Total depth of boring = 12 feet
13												
14												
15												
16												
17												
18												
19												
20												
21												
22												
23												
24												
25												
26												
27												
28												
29												
30												
31												
32												
33												
34												
35												

Tetra Tech EM Inc.

Log of Soil-Gas Boring: SG07

Logged By: REBECCA LESHER
Logging Consultant: TETRA TECH
Drilling Company: GREGG

Project: HPS Parcel E Nonstandard Data Gaps
Project No: G90160030301020711
Location: Parcel E IR-01/21 Landfill
Surface Elevation (feet): 17.17
Top of Casing Elevation (feet MSL): NA

Drilling Method: DIRECT-PUSH
Boring Started: 03/26/02
Completed: 03/26/02
Boring Depth (feet bgs): 16.00
Boring Diameter (inches): 2.00

DEPTH (FEET)	DRIVE INTERVAL	RECOVERY (IN)	BLOW COUNT	LAB SAMPLE	SOIL GAS SAMPLE ID	OVM (PPM)	VOCS (PPM)	METHANE (% BY VOLUME IN AIR)	WATER LEVEL	GRAPHIC LOG	ASTM SOIL TYPE	DESCRIPTION
0												Ground Surface
1												Aspahlt and concrete
2		29										CLAY WITH GRAVEL: Black staining from 1.5 to 2.0 feet; 1.5-foot clay lens containing more gravel; about 10% fine-grained gravel; slightly moist; no staining
3												
4											CL	
5							1.3	0				
6		48										
7												SANDY CLAY: reddish brown (5YR 4/4); slightly moist; 20% fine- to medium-grained sand; occasional fine gravel; 2-inch lens of fine sand (light gray) at 4.25 feet
8											CL	
9											GR	Increasing gravel content; gravel lens from 9.5 to 10.5 feet (serpentinite)
10		48			SG07SG001		0	75.2				
11												
12												SANDY CLAY: very dark gray (N3/); slightly moist; 30% fine sand; occasional gravelly layer (about 1 to 2 inches thick); no staining; becomes saturated at about 11 feet
13											CL	
14		29										
15												
16												Total depth of boring = 16 feet
17												
18												
19												
20												
21												
22												
23												
24												
25												
26												
27												
28												
29												
30												
31												
32												
33												
34												
35												

Tetra Tech EM Inc.

Log of Soil-Gas Boring: SG07A

Logged By: KATHY VANDENHEUVEL
Logging Consultant: TETRA TECH
Drilling Company: GREGG

Project: HPS Parcel E Nonstandard Data Gaps
Project No: G90160030301020711
Location: Parcel E IR-01/21 Landfill
Surface Elevation (feet): 12.77
Top of Casing Elevation (feet MSL): NA

Drilling Method: DIRECT-PUSH
Boring Started: 03/28/02
Completed: 03/28/02
Boring Depth (feet bgs): 12.00
Boring Diameter (inches): 2.00

DEPTH (FEET)	DRIVE INTERVAL	RECOVERY (IN)	BLOW COUNT	LAB SAMPLE	SOIL GAS SAMPLE ID	OVM (PPM)	VOCS (PPM)	METHANE (% BY VOLUME IN AIR)	WATER LEVEL	GRAPHIC LOG	ASTM SOIL TYPE	DESCRIPTION
0												Ground Surface
1											CL	SANDY CLAY: dark grayish brown (2.5Y 4/2); slightly moist; with occasional gravel
2		48										
3												Color changes to gray (2.5Y 5/1)
4												
5					SG07SG002		0.2	3.9				
6		34										
7											CL	
8												Moisture content increases to moist at 7.5 feet
9												
10		14			SG07SG003		0.6	0.9				
11												
12									▽			Total depth of boring = 12 feet
13												
14												
15												
16												
17												
18												
19												
20												
21												
22												
23												
24												
25												
26												
27												
28												
29												
30												
31												
32												
33												
34												
35												

Tetra Tech EM Inc.

Log of Soil-Gas Boring: SG07B

Logged By: KATHY VANDENHEUVEL
Logging Consultant: TETRA TECH
Drilling Company: GREGG

Project: HPS Parcel E Nonstandard Data Gaps
Project No: G90160030301020711
Location: Parcel E IR-01/21 Landfill
Surface Elevation (feet): 12.47
Top of Casing Elevation (feet MSL): NA

Drilling Method: DIRECT-PUSH
Boring Started: 03/28/02
Completed: 03/28/02
Boring Depth (feet bgs): 12.00
Boring Diameter (inches): 2.00

DEPTH (FEET)	DRIVE INTERVAL	RECOVERY (IN)	BLOW COUNT	LAB SAMPLE	SOIL GAS SAMPLE ID	OVM (PPM)	VOCS (PPM)	METHANE (% BY VOLUME IN AIR)	WATER LEVEL	GRAPHIC LOG	ASTM SOIL TYPE	DESCRIPTION
0												Ground Surface
1												Well-graded SANDY CLAY: very dark gray (2.5Y 3/1); slightly moist; with occasional serpentinite gravel
2		36										
3							0.9	0			CL	Moisture content increases
4									▽			
5												Soil becomes saturated at about 5 feet
6		36										Well-graded CLAYEY SAND: dark gray (2.5Y 4/1); moist to slightly moist; reddish brown lens at 7.5 feet
7												
8												
9											SC	
10		36										
11												
12												Total depth of boring = 12 feet
13												
14												
15												
16												
17												
18												
19												
20												
21												
22												
23												
24												
25												
26												
27												
28												
29												
30												
31												
32												
33												
34												
35												

Tetra Tech EM Inc.

Log of Soil-Gas Boring: SG08

Logged By: REBECCA LESHER
Logging Consultant: TETRA TECH
Drilling Company: GREGG

Project: HPS Parcel E Nonstandard Data Gaps
Project No: G90160030301020711
Location: Parcel E IR-01/21 Landfill
Surface Elevation (feet):
Top of Casing Elevation (feet MSL): NA

Drilling Method: DIRECT-PUSH
Boring Started: 03/26/02
Completed: 03/26/02
Boring Depth (feet bgs): 16.00
Boring Diameter (inches): 2.00

DEPTH (FEET)	DRIVE INTERVAL	RECOVERY (IN)	BLOW COUNT	LAB SAMPLE	SOIL GAS SAMPLE ID	OVM (PPM)	VOCS (PPM)	METHANE (% BY VOLUME IN AIR)	WATER LEVEL	GRAPHIC LOG	ASTM SOIL TYPE	DESCRIPTION
0												Ground Surface
1											CL	SANDY CLAY: dark yellowish brown (10YR 3/4); lean clay; 40% fine sand
2		36										
3											SP	Poorly graded SAND: coarse, subangular to subrounded
4											CL	
5												LEAN CLAY WITH SAND: dark yellowish brown (10YR 4/4); slightly moist; about 10% fine sand; no staining
6		48									CL	
7												LEAN CLAY: dark reddish brown (5YR 3/4); 2-inch lens of blackish soil at 4.75 feet
8							2.2	0.1			SC	
9											SC	CLAYEY SAND: greenish gray (5GY 5/1); slightly moist; about 30% lean clay; serpentinite in content
10		48									SP	
11												LEAN CLAY: dark reddish brown (5YR 3/4); slightly moist
12					SG08SG001		0	10.4			CL	Poorly graded SAND: ligh gray (10YR 4/2); 100% fine-grained; some fines
13												
14		48									CL	Lens of slightly sandier material (20% fine sand); LEAN CLAY from 11 to 16 feet; soil becomes saturated at 13.5 feet
15												
16												LEAN CLAY: brown and green and reddish brown mottled; slightly moist; no odor
17												
18												Total depth of boring = 16 feet
19												
20												
21												
22												
23												
24												
25												
26												
27												
28												
29												
30												
31												
32												
33												
34												
35												

Tetra Tech EM Inc.

Log of Soil-Gas Boring: SG08A

Logged By: KATHY VANDENHEUVEL
Logging Consultant: TETRA TECH
Drilling Company: GREGG

Project: HPS Parcel E Nonstandard Data Gaps
Project No: G90160030301020711
Location: Parcel E IR-01/21 Landfill
Surface Elevation (feet): 13.65
Top of Casing Elevation (feet MSL): NA

Drilling Method: DIRECT-PUSH
Boring Started: 03/28/02
Completed: 03/28/02
Boring Depth (feet bgs): 12.00
Boring Diameter (inches): 2.00

DEPTH (FEET)	DRIVE INTERVAL	RECOVERY (IN)	BLOW COUNT	LAB SAMPLE	SOIL GAS SAMPLE ID	OVM (PPM)	VOCS (PPM)	METHANE (% BY VOLUME IN AIR)	WATER LEVEL	GRAPHIC LOG	ASTM SOIL TYPE	DESCRIPTION
0												Ground Surface
1												SANDY CLAY: very dark brown (10YR 3/1); very slightly moist; 30% sand; with occasional gravel
2		48									CL	
3												
4					SG08SG002		0	17.0			SC	CLAYEY SAND: greenish gray (5G 5/1); fine- to medium-grained
5												
6		36										SANDY CLAY: greenish gray (5BG 4/1); with occasional gravel
7												
8					SG08SG003		0	9.4			CL	Poor Recovery from 8 to 12 feet due to cobble/boulder
9												
10		12										
11												
12												Total depth of boring = 12 feet
13												
14												
15												
16												
17												
18												
19												
20												
21												
22												
23												
24												
25												
26												
27												
28												
29												
30												
31												
32												
33												
34												
35												

Tetra Tech EM Inc.

Log of Soil-Gas Boring: SG08B

Logged By: KATHY VANDENHEUVEL
Logging Consultant: TETRA TECH
Drilling Company:

Project: HPS Parcel E Nonstandard Data Gaps
Project No: G90160030301020711
Location: Parcel E IR-01/21 Landfill
Surface Elevation (feet): 12.65
Top of Casing Elevation (feet MSL): NA

Drilling Method: DIRECT-PUSH
Boring Started: 03/28/02
Completed: 03/28/02
Boring Depth (feet bgs): 12.00
Boring Diameter (inches): 2.00

DEPTH (FEET)	DRIVE INTERVAL	RECOVERY (IN)	BLOW COUNT	LAB SAMPLE	SOIL GAS SAMPLE ID	OVM (PPM)	VOCS (PPM)	METHANE (% BY VOLUME IN AIR)	WATER LEVEL	GRAPHIC LOG	ASTM SOIL TYPE	DESCRIPTION
0												Ground Surface
1											SC	Well-graded CLAYEY SAND: dark gray (10YR 4/1)
2		48										Well-graded SANDY CLAY: gray (10YR 5/1); slightly moist; 30% sand; with occasional gravel
3												
4												
5							1.8	0				
6		36										
7											CL	
8												
9												
10		24										
11												
12												Total depth of boring = 12 feet
13												
14												
15												
16												
17												
18												
19												
20												
21												
22												
23												
24												
25												
26												
27												
28												
29												
30												
31												
32												
33												
34												
35												

Tetra Tech EM Inc.

Log of Soil-Gas Boring: SG09

Logged By: REBECCA LESHER
Logging Consultant: TETRA TECH
Drilling Company: GREGG

Project: HPS Parcel E Nonstandard Data Gaps
Project No: G90160030301020711
Location: Parcel E IR-01/21 Landfill
Surface Elevation (feet):
Top of Casing Elevation (feet MSL): NA

Drilling Method: DIRECT-PUSH
Boring Started: 03/26/02
Completed: 03/26/02
Boring Depth (feet bgs): 12.00
Boring Diameter (inches): 2.00

DEPTH (FEET)	DRIVE INTERVAL	RECOVERY (IN)	BLOW COUNT	LAB SAMPLE	SOIL GAS SAMPLE ID	OVM (PPM)	VOCS (PPM)	METHANE (% BY VOLUME IN AIR)	WATER LEVEL	GRAPHIC LOG	ASTM SOIL TYPE	DESCRIPTION
0												Ground Surface
1											CL	LEAN CLAY WITH SAND: dark yellowish brown (10YR 3/4); very slightly moist; about 10% fine-grained sand; no odor or staining
2		48										
3												SANDY CLAY: dark grayish brown (2.5Y 4/2); slightly moist; about 20% fine- to coarse-grained sand; with occasional gravel; no odor or staining
4											CL	
5												
6		48										
7											SP	Poorly graded SAND: olive (5Y 4/3); fine-grained
											CL	
8							0	0.2				LEAN CLAY: dark yellowish brown (10YR 3/4); very little to no sand
9									▽			
10		14									CL	
11												Same as 2.0 to 6.5 feet SANDY CLAY: clightly moist; clay content increses with depth
12												Total depth of boring = 12 feet
13												
14												
15												
16												
17												
18												
19												
20												
21												
22												
23												
24												
25												
26												
27												
28												
29												
30												
31												
32												
33												
34												
35												

Tetra Tech EM Inc.

Log of Soil-Gas Boring: SG10

Logged By: REBECCA LESHER
Logging Consultant: TETRA TECH
Drilling Company: GREGG

Project: HPS Parcel E Nonstandard Data Gaps
Project No: G90160030301020711
Location: Parcel E IR-01/21 Landfill
Surface Elevation (feet): 10.10
Top of Casing Elevation (feet MSL): NA

Drilling Method: DIRECT-PUSH
Boring Started: 03/25/02
Completed: 03/25/02
Boring Depth (feet bgs): 12.00
Boring Diameter (inches): 2.00

DEPTH (FEET)	DRIVE INTERVAL	RECOVERY (IN)	BLOW COUNT	LAB SAMPLE	SOIL GAS SAMPLE ID	OVM (PPM)	VOCS (PPM)	METHANE (% BY VOLUME IN AIR)	WATER LEVEL	GRAPHIC LOG	ASTM SOIL TYPE	DESCRIPTION
0												Ground Surface
1											SC	SANDY CLAY: very dark gray (2.5Y 3/1); medium- to coarse-grained, angular sand; with occasional gravel
2		48										
3							2.9	0			SP	Poorly graded SAND: light olive brown (2.5Y 5/4); fine-grained
4												
5											SW	Well-gradeed SAND WITH GRAVEL: dark gray (2.5Y 4/1); fine- to coarse-grained; 10% fine- to medium-grained gravel; no odor
6		48										
7							3.2	0				
8												
9											SW	Soil becomes saturated
10		34										
11												
12												Total depth of boring = 12 feet
13												
14												
15												
16												
17												
18												
19												
20												
21												
22												
23												
24												
25												
26												
27												
28												
29												
30												
31												
32												
33												
34												
35												

Tetra Tech EM Inc.

Log of Soil-Gas Boring: SG11

Logged By: REBECCA LESHER
Logging Consultant: TETRA TECH
Drilling Company: GREGG

Project: HPS Parcel E Nonstandard Data Gaps
Project No: G90160030301020711
Location: Parcel E IR-01/21 Landfill
Surface Elevation (feet): 11.02
Top of Casing Elevation (feet MSL): NA

Drilling Method: DIRECT-PUSH
Boring Started: 03/25/02
Completed: 03/25/02
Boring Depth (feet bgs): 12.00
Boring Diameter (inches): 2.00

DEPTH (FEET)	DRIVE INTERVAL	RECOVERY (IN)	BLOW COUNT	LAB SAMPLE	SOIL GAS SAMPLE ID	OVM (PPM)	VOCS (PPM)	METHANE (% BY VOLUME IN AIR)	WATER LEVEL	GRAPHIC LOG	ASTM SOIL TYPE	DESCRIPTION
0												Ground Surface
1											SP	Poorly graded SAND: dark gray (2.5Y 4/1); with few fine gravel
											CL	
2		48									SC	LEAN CLAY: reddish brown (5YR 4/4)
3												
4							3.9	0			SP	Poorly graded CLAYEY SAND: drk gray (2.5Y 4/1); about 20% clay
5												
6		48										Poorly graded SAND: grayish brown (5Y 5/2); with few fine gravel
7												
8					SG11SG001		229.8	0			SP	Poorly graded SAND WITH CLAY: grayish brown (2.5Y 5/2); about 10% clay; no odor or staining
9												
10		34										
11											CL	Increase in clay content LEAN CLAY WITH SAND: saturated; about 10% sand
12												
13												Total depth of boring = 12 feet
14												
15												
16												
17												
18												
19												
20												
21												
22												
23												
24												
25												
26												
27												
28												
29												
30												
31												
32												
33												
34												
35												

Tetra Tech EM Inc.

Log of Soil-Gas Boring: SG12

Logged By: REBECCA LESHER
Logging Consultant: TETRA TECH
Drilling Company: GREGG

Project: HPS Parcel E Nonstandard Data Gaps
Project No: G90160030301020711
Location: Parcel E IR-01/21 Landfill
Surface Elevation (feet): 11.61
Top of Casing Elevation (feet MSL): NA

Drilling Method: DIRECT-PUSH
Boring Started: 03/25/02
Completed: 03/25/02
Boring Depth (feet bgs): 12.00
Boring Diameter (inches): 2.00

DEPTH (FEET)	DRIVE INTERVAL	RECOVERY (IN)	BLOW COUNT	LAB SAMPLE	SOIL GAS SAMPLE ID	OVM (PPM)	VOCS (PPM)	METHANE (% BY VOLUME IN AIR)	WATER LEVEL	GRAPHIC LOG	ASTM SOIL TYPE	DESCRIPTION
0												Ground Surface
1											CL	LEAN CLAY: reddish brown (5YR 4/3); slightly moist
2		48									SP	Poorly graded SAND: olive brown (2.5Y 4/3); slightly moist; subrounded to subangular; no odor or staining
3												
4												
5							0	0				
6		48										
7											CL	SANDY CLAY: dark brown (10YR 3/3); 30% sand; clay content increases to 100% at 11 feet
8												
9												
10		48			SG12SG001		21.1	0				
11												
12												Total depth of boring = 12 feet
13												
14												
15												
16												
17												
18												
19												
20												
21												
22												
23												
24												
25												
26												
27												
28												
29												
30												
31												
32												
33												
34												
35												

Tetra Tech EM Inc.

Log of Soil-Gas Boring: SG13

Logged By: REBECCA LESHER
Logging Consultant: TETRA TECH
Drilling Company: GREGG

Project: HPS Parcel E Nonstandard Data Gaps
Project No: G90160030301020711
Location: Parcel E IR-01/21 Landfill
Surface Elevation (feet): 11.28
Top of Casing Elevation (feet MSL): NA

Drilling Method: DIRECT-PUSH
Boring Started: 03/25/02
Completed: 03/25/02
Boring Depth (feet bgs): 8.00
Boring Diameter (inches): 2.00

DEPTH (FEET)	DRIVE INTERVAL	RECOVERY (IN)	BLOW COUNT	LAB SAMPLE	SOIL GAS SAMPLE ID	OVM (PPM)	VOCS (PPM)	METHANE (% BY VOLUME IN AIR)	WATER LEVEL	GRAPHIC LOG	ASTM SOIL TYPE	DESCRIPTION
0												Ground Surface
1											SC	SANDY CLAY: brown (10YR 4/3); fine-grained; subrounded
2		48										
3											SP	Poorly graded SAND: light gray (5Y 7/2); slightly moist; fine- to medium-grained
4							0	0				
5											CL	LEAN CLAY WITH SAND: dark gray (5Y 4/1); moist; 10% fine sand; no staining
6		48										
7									▽			Becomes saturated at 7.5 feet
8												Total depth of boring = 8 feet
9												
10												
11												
12												
13												
14												
15												
16												
17												
18												
19												
20												
21												
22												
23												
24												
25												
26												
27												
28												
29												
30												
31												
32												
33												
34												
35												

Tetra Tech EM Inc.

Log of Soil-Gas Boring: SG14

Logged By: REBECCA LESHER
Logging Consultant: TETRA TECH
Drilling Company: GREGG

Project: HPS Parcel E Nonstandard Data Gaps
Project No: G90160030301020711
Location: Parcel E IR-01/21 Landfill
Surface Elevation (feet): 10.41
Top of Casing Elevation (feet MSL): NA

Drilling Method: DIRECT-PUSH
Boring Started: 03/25/02
Completed: 03/25/02
Boring Depth (feet bgs): 8.00
Boring Diameter (inches): 2.00

DEPTH (FEET)	DRIVE INTERVAL	RECOVERY (IN)	BLOW COUNT	LAB SAMPLE	SOIL GAS SAMPLE ID	OVM (PPM)	VOCS (PPM)	METHANE (% BY VOLUME IN AIR)	WATER LEVEL	GRAPHIC LOG	ASTM SOIL TYPE	DESCRIPTION
0												Ground Surface
1											SC	SANDY CLAY: brown (10YR 4/3); slightly moist; 30% medium-grained sand; no staining
2		48										
3												Poorly graded SAND WITH CLAY: medium- to fine-grained; about 10% clay
4												
5							0	0			SP	
6		43										
7												Becomes saturated at 7 feet; no staining
8												
9												Total depth of boring = 8 feet
10												
11												
12												
13												
14												
15												
16												
17												
18												
19												
20												
21												
22												
23												
24												
25												
26												
27												
28												
29												
30												
31												
32												
33												
34												
35												

Tetra Tech EM Inc.

Log of Soil-Gas Boring: SG15

Project: HPS Parcel E Nonstandard Data Gaps
Project No: G90160030301020711
Location: Parcel E IR-01/21 Landfill
Surface Elevation (feet): 10.08
Top of Casing Elevation (feet MSL): NA

Drilling Method: DIRECT-PUSH
Boring Started: 03/26/02
Completed: 03/26/02
Boring Depth (feet bgs): 12.00
Boring Diameter (inches): 2.00

Logged By: REBECCA LESHER
Logging Consultant: TETRA TECH
Drilling Company: GREGG

DEPTH (FEET)	DRIVE INTERVAL	RECOVERY (IN)	BLOW COUNT	LAB SAMPLE	SOIL GAS SAMPLE ID	OVM (PPM)	VOCS (PPM)	METHANE (% BY VOLUME IN AIR)	WATER LEVEL	GRAPHIC LOG	ASTM SOIL TYPE	DESCRIPTION
0												Ground Surface
0–1											CL	LEAN CLAY WITH SAND: brown (10YR 4/3); slightly moist; about 10% fine-grained sand; no staining
1–2											SP	
2–3		48									CL	Poorly graded SAND: brownish yellow (10YR 6/6) and yellowish brown (10YR 5/4); fine sand
3–4											CL	
4–5					SG15SG001		88.5	0.4			SC	CLAY WITH SAND: dark greenish gray (5GY 4/1); serpentinite clay; about 10% sand
5–6		48										
6–7												Clay content increases to 100% lean clay
7–8												CLAYEY SAND: yellowish brown (10YR 5/4); fine sand; 20% clay
8–9											CL	
9–10		24										LEAN CLAY: dark greenish gray (5GY 4/1); moist; serpentinite clay; occasional medium- to fine-grained gravel lens; no staining
10–11												
11–12												.
12												Total depth of boring = 12 feet

Tetra Tech EM Inc.

Log of Soil-Gas Boring: SG16

Logged By: REBECCA LESHER
Logging Consultant: TETRA TECH
Drilling Company: GREGG

Project: HPS Parcel E Nonstandard Data Gaps
Project No: G90160030301020711
Location: Parcel E IR-01/21 Landfill
Surface Elevation (feet): 10.05
Top of Casing Elevation (feet MSL): NA

Drilling Method: DIRECT-PUSH
Boring Started: 03/26/02
Completed: 03/26/02
Boring Depth (feet bgs): 8.00
Boring Diameter (inches): 2.00

DEPTH (FEET)	DRIVE INTERVAL	RECOVERY (IN)	BLOW COUNT	LAB SAMPLE	SOIL GAS SAMPLE ID	OVM (PPM)	VOCS (PPM)	METHANE (% BY VOLUME IN AIR)	WATER LEVEL	GRAPHIC LOG	ASTM SOIL TYPE	DESCRIPTION
0												Ground Surface
1												Poorly graded CLAYEY SAND: dark yellowish brown (10YR 4/6); slightly moist; fine-grained; about 40% clay; occasional gravel (up to about 0.25-inch diameter); serpentinite and asphalt in content; small piece of wood (root?) at 3 feet; no staining
2		29									SC	
3												
4							4.3	0				LEAN CLAY: dark brown (10YR 3/3); saturated; little to no sand
5												
6		24									CL	
7									▽			
8												Total depth of boring = 8 feet
9												
10												
11												
12												
13												
14												
15												
16												
17												
18												
19												
20												
21												
22												
23												
24												
25												
26												
27												
28												
29												
30												
31												
32												
33												
34												
35												

Tetra Tech EM Inc.

Log of Soil-Gas Boring: SG19

Logged By: KATHY VANDENHEUVAL
Logging Consultant: TETRA TECH
Drilling Company: GREGG

Project: HPS Parcel E Nonstandard Data Gaps
Project No: G90160030301020711
Location: Parcel E IR-01/21 Landfill
Surface Elevation (feet): 16.42
Top of Casing Elevation (feet MSL): NA

Drilling Method: DIRECT-PUSH
Boring Started: 03/27/02
Completed: 03/27/02
Boring Depth (feet bgs): 12.00
Boring Diameter (inches): 2.00

DEPTH (FEET)	DRIVE INTERVAL	RECOVERY (IN)	BLOW COUNT	LAB SAMPLE	SOIL GAS SAMPLE ID	OVM (PPM)	VOCS (PPM)	METHANE (% BY VOLUME IN AIR)	WATER LEVEL	GRAPHIC LOG	ASTM SOIL TYPE	DESCRIPTION
0												Ground Surface
1												SANDY CLAY: dark grayish brown (10YR 4/2); slightly moist to moist; 30% sand
2		29										Sand content decreases to 20% at 3 feet
3												
4												
5							3.2	0				
6		24									CL	Occasional gravel (up to 1-inch diameter)
7												
8												
9												Soils become saturated
10		48					0.1	0				
11												
12												Total depth of boring = 12 feet
13												
14												
15												
16												
17												
18												
19												
20												
21												
22												
23												
24												
25												
26												
27												
28												
29												
30												
31												
32												
33												
34												
35												

Tetra Tech EM Inc.

Log of Soil-Gas Boring: SG20

Logged By: KATHY VANDENHEUVEL
Logging Consultant: TETRA TECH
Drilling Company: GREGG

Project: HPS Parcel E Nonstandard Data Gaps
Project No: G90160030301020711
Location: Parcel E IR-01/21 Landfill
Surface Elevation (feet): 8.92
Top of Casing Elevation (feet MSL): NA

Drilling Method: DIRECT-PUSH
Boring Started: 04/05/02
Completed: 04/05/02
Boring Depth (feet bgs): 4.00
Boring Diameter (inches): 2.00

DEPTH (FEET)	DRIVE INTERVAL	RECOVERY (IN)	BLOW COUNT	LAB SAMPLE	SOIL GAS SAMPLE ID	OVM (PPM)	VOCS (PPM)	METHANE (% BY VOLUME IN AIR)	WATER LEVEL	GRAPHIC LOG	ASTM SOIL TYPE	DESCRIPTION
0												Ground Surface
1												SANDY CLAY: dark gray (10YR 4/1); occasional gravel (up to 1-inch diameter)
2		28									CL	
3							0	0				Becomes saturated at 3.5 feet
4												Total depth of boring = 4 feet
5												
6												
7												
8												
9												
10												
11												
12												
13												
14												
15												
16												
17												
18												
19												
20												
21												
22												
23												
24												
25												
26												
27												
28												
29												
30												
31												
32												
33												
34												
35												

Tetra Tech EM Inc.

Log of Soil-Gas Boring: SG21

Logged By: KATHY VANDENHEUVEL
Logging Consultant: TETRA TECH
Drilling Company: GREGG

Project: HPS Parcel E Nonstandard Data Gaps
Project No: G90160030301020711
Location: Parcel E IR-01/21 Landfill
Surface Elevation (feet): 10.36
Top of Casing Elevation (feet MSL): NA

Drilling Method: DIRECT-PUSH
Boring Started: 04/05/02
Completed: 04/05/02
Boring Depth (feet bgs): 8.00
Boring Diameter (inches): 2.00

DEPTH (FEET)	DRIVE INTERVAL	RECOVERY (IN)	BLOW COUNT	LAB SAMPLE	SOIL GAS SAMPLE ID	OVM (PPM)	VOCS (PPM)	METHANE (% BY VOLUME IN AIR)	WATER LEVEL	GRAPHIC LOG	ASTM SOIL TYPE	DESCRIPTION
0												Ground Surface
1												SANDY CLAY WITH GRAVEL: dark grayish brown (10YR 4/2); moist; 30% sand; 10% gravel (up to 1-inch diameter)
2		28										2-inch yellow CLAYEY SAND lens at 2.6 feet
3											CL	
4							0.5	0.6				
5												
6		48										CLAYEY SAND: dark grayish brown (10YR 4/2); 50% sand; 10% gravel
7											SC	
8									ND			Total depth of boring = 8 feet
9												
10												
11												
12												
13												
14												
15												
16												
17												
18												
19												
20												
21												
22												
23												
24												
25												
26												
27												
28												
29												
30												
31												
32												
33												
34												
35												

Tetra Tech EM Inc.

Log of Soil-Gas Boring: SG21A

Logged By: KATHY VANDENHEUVEL
Logging Consultant: TETRA TECH
Drilling Company: GREGG

Project: HPS Parcel E Nonstandard Data Gaps
Project No: G90160030301020711
Location: Parcel E IR-01/21 Landfill
Surface Elevation (feet): 13.26
Top of Casing Elevation (feet MSL): NA

Drilling Method: DIRECT-PUSH
Boring Started: 04/04/02
Completed: 04/04/02
Boring Depth (feet bgs): 7.00
Boring Diameter (inches): 2.00

DEPTH (FEET)	DRIVE INTERVAL	RECOVERY (IN)	BLOW COUNT	LAB SAMPLE	SOIL GAS SAMPLE ID	OVM (PPM)	VOCS (PPM)	METHANE (% BY VOLUME IN AIR)	WATER LEVEL	GRAPHIC LOG	ASTM SOIL TYPE	DESCRIPTION
0												Ground Surface
1												Concrete (first 6 inches)
2		19										SANDY CLAY WITH GRAVEL: dark grayish brown (10YR 4/2); moist; 10% gravel
3											CL	
4												
5		24										
6												Debris: metal, wood, paper, plastic
7					SG21SG001		8.1	0.2			Fill	Refusal at 7 feet due to debris Groundwater not encountered
8												Total depth of boring = 7 feet
9												
10												
11												
12												
13												
14												
15												
16												
17												
18												
19												
20												
21												
22												
23												
24												
25												
26												
27												
28												
29												
30												
31												
32												
33												
34												
35												

Tetra Tech EM Inc.

Log of Soil-Gas Boring: SG22

Logged By: KATHY VANDENHEUVEL
Logging Consultant: TETRA TECH
Drilling Company: GREGG

Project: HPS Parcel E Nonstandard Data Gaps
Project No: G90160030301020711
Location: Parcel E IR-01/21 Landfill
Surface Elevation (feet): 10.55
Top of Casing Elevation (feet MSL): NA

Drilling Method: DIRECT-PUSH
Boring Started: 04/04/02
Completed: 04/04/02
Boring Depth (feet bgs): 8.00
Boring Diameter (inches): 2.00

DEPTH (FEET)	DRIVE INTERVAL	RECOVERY (IN)	BLOW COUNT	LAB SAMPLE	SOIL GAS SAMPLE ID	OVM (PPM)	VOCS (PPM)	METHANE (% BY VOLUME IN AIR)	WATER LEVEL	GRAPHIC LOG	ASTM SOIL TYPE	DESCRIPTION
0												Ground Surface
1												SANDY CLAY WITH GRAVEL: dark grayish brown (10YR 4/2); moist; 30% sand; 20% gravel (up to 1-inch diameter); grass (first 2 inches)
2		24										
3											CL	
4							0	0				
5												Soils become saturated at 5 feet
6		29										
7											CL	LEAN CLAY WITH SAND: dark gray (10YR 4/1); 10% sand
8												Total depth of boring = 8 feet
9												
10												
11												
12												
13												
14												
15												
16												
17												
18												
19												
20												
21												
22												
23												
24												
25												
26												
27												
28												
29												
30												
31												
32												
33												
34												
35												

Tetra Tech EM Inc.

Log of Soil-Gas Boring: SG22A

Logged By: KATHY VANDENHEUVEL
Logging Consultant: TETRA TECH
Drilling Company: GREGG

Project: HPS Parcel E Nonstandard Data Gaps
Project No: G90160030301020711
Location: Parcel E IR-01/21 Landfill
Surface Elevation (feet): 13.23
Top of Casing Elevation (feet MSL): NA

Drilling Method: DIRECT-PUSH
Boring Started: 04/01/02
Completed: 04/01/02
Boring Depth (feet bgs): 8.00
Boring Diameter (inches): 2.00

DEPTH (FEET)	DRIVE INTERVAL	RECOVERY (IN)	BLOW COUNT	LAB SAMPLE	SOIL GAS SAMPLE ID	OVM (PPM)	VOCS (PPM)	METHANE (% BY VOLUME IN AIR)	WATER LEVEL	GRAPHIC LOG	ASTM SOIL TYPE	DESCRIPTION
0												Ground Surface
1												Well-graded SAND WITH GRAVEL AND CLAY: dark brown (10YR 3/3);
2		36										
3												
4											SW	
5												
6		19										
7							3.1	0				Pieces of red brick and cloth-like shoelace material in drive shoe at 8 feet No groundwater encountered
8												Total depth of boring = 8 feet
9												
10												
11												
12												
13												
14												
15												
16												
17												
18												
19												
20												
21												
22												
23												
24												
25												
26												
27												
28												
29												
30												
31												
32												
33												
34												
35												

Tetra Tech EM Inc.

Log of Soil-Gas Boring: SG23

Logged By: KATHY VANDENHEUVEL
Logging Consultant: TETRA TECH
Drilling Company: GREGG

Project: HPS Parcel E Nonstandard Data Gaps
Project No: G90160030301020711
Location: Parcel E IR-01/21 Landfill
Surface Elevation (feet): 11.78
Top of Casing Elevation (feet MSL): NA

Drilling Method: DIRECT-PUSH
Boring Started: 04/04/02
Completed: 04/04/02
Boring Depth (feet bgs): 12.00
Boring Diameter (inches): 2.00

DEPTH (FEET)	DRIVE INTERVAL	RECOVERY (IN)	BLOW COUNT	LAB SAMPLE	SOIL GAS SAMPLE ID	OVM (PPM)	VOCS (PPM)	METHANE (% BY VOLUME IN AIR)	WATER LEVEL	GRAPHIC LOG	ASTM SOIL TYPE	DESCRIPTION
												Ground Surface
0											SW	Well-graded SAND: dark grayish brown (10YR 4/2)
1												
2		29									SC	CLAYEY SAND WITH GRAVEL: very dark gray (10YR 3/1); slightly moist
3											SW	
4							5.0	0.1				Well-graded SAND WITH CLAY AND GRAVEL: reddish brown (5YR 4/3); 40% gravel
5											CL	
6		29										SANDY LEAN CLAY WITH GRAVEL: brown (10YR 4/3)
7												Color changes to very dark gray (10YR 3/1)
8												
9											CL	
10		48										
11												
12												Total depth of boring = 12 feet
13												
14												
15												
16												
17												
18												
19												
20												
21												
22												
23												
24												
25												
26												
27												
28												
29												
30												
31												
32												
33												
34												
35												

Tetra Tech EM Inc.

Log of Soil-Gas Boring: SG24

Logged By: KATHY VANDENHEUVEL
Logging Consultant: Tetra tech
Drilling Company: GREGG

Project: HPS Parcel E NonStandard Data Gaps
Project No: G90160030301020711
Location: Parcel E IR-01/21 Landfill
Surface Elevation (feet): 15.11
Top of Casing Elevation (feet MSL): NA

Drilling Method: DIRECT-PUSH
Boring Started: 03/27/02
Completed: 03/27/02
Boring Depth (feet bgs): 6.00
Boring Diameter (inches): 2.00

DEPTH (FEET)	DRIVE INTERVAL	RECOVERY (IN)	BLOW COUNT	LAB SAMPLE	SOIL GAS SAMPLE ID	OVM (PPM)	VOCS (PPM)	METHANE (% BY VOLUME IN AIR)	WATER LEVEL	GRAPHIC LOG	ASTM SOIL TYPE	DESCRIPTION
0												Ground Surface
1											CL	LEAN CLAY WITH SAND: very dark grayish brown (10YR 3/2); moist; 10% sand Sand lens (2-inch) at 3.5 feet
2		29										
3												Becomes saturated at 4 feet
4					SG24SG001		2.3	0.2				Groundwater not encountered; refusal at 6 feet Concrete chunks in sampler shoe
5		19										
6												Total depth of boring = 6 feet
7												
8												
9												
10												
11												
12												
13												
14												
15												
16												
17												
18												
19												
20												
21												
22												
23												
24												
25												
26												
27												
28												
29												
30												
31												
32												
33												
34												
35												

Tetra Tech EM Inc.

Log of Soil-Gas Boring: SG25

Logged By: KATHY VANDENHEUVEL
Logging Consultant: TETRA TECH
Drilling Company: GREGG

Project: HPS Parcel E Nonstandard Data Gaps
Project No: G90160030301020711
Location: Parcel E IR-01/21 Landfill
Surface Elevation (feet): 17.47
Top of Casing Elevation (feet MSL): NA

Drilling Method: DIRECT-PUSH
Boring Started: 03/27/02
Completed: 03/27/02
Boring Depth (feet bgs): 16.00
Boring Diameter (inches): 2.00

DEPTH (FEET)	DRIVE INTERVAL	RECOVERY (IN)	BLOW COUNT	LAB SAMPLE	SOIL GAS SAMPLE ID	OVM (PPM)	VOCS (PPM)	METHANE (% BY VOLUME IN AIR)	WATER LEVEL	GRAPHIC LOG	ASTM SOIL TYPE	DESCRIPTION
0												Ground Surface
1												Well-graded SANDY CLAY: dark gray (NY/); slightly moist; 30% sand
2		36										
3												Moisture content increases; 1-inch sandy lens at 8 feet
4											CL	
5					SG25SG001		2.6	71.6				
6		36										
7												
8												Interbedded green and brown lenses from 8 to 12 feet
9												
10		36										
11					SG25SG003		0.1	2.5				
12											CL	
13												
14		29										
15												
16												Total depth of boring = 16 feet
17												
18												
19												
20												
21												
22												
23												
24												
25												
26												
27												
28												
29												
30												
31												
32												
33												
34												
35												

Tetra Tech EM Inc.

Log of Soil-Gas Boring: SG25A

Logged By: KATHY VANDENHEUVEL
Logging Consultant: TETRA TECH
Drilling Company: GREGG

Project: HPS Parcel E Nonstandard Data Gaps
Project No: G90160030301020711
Location: Parcel E IR-01/21 Landfill
Surface Elevation (feet): 18.09
Top of Casing Elevation (feet MSL): NA

Drilling Method: DIRECT-PUSH
Boring Started: 04/01/02
Completed: 04/01/02
Boring Depth (feet bgs): 16.00
Boring Diameter (inches): 2.00

DEPTH (FEET)	DRIVE INTERVAL	RECOVERY (IN)	BLOW COUNT	LAB SAMPLE	SOIL GAS SAMPLE ID	OVM (PPM)	VOCS (PPM)	METHANE (% BY VOLUME IN AIR)	WATER LEVEL	GRAPHIC LOG	ASTM SOIL TYPE	DESCRIPTION
0												Ground Surface
1											CL	SANDY CLAY: dark gray (10YR 4/1); slightly moist; with occasional serpentinite gravel
2		36										1-inch-thick yellow and red clay lenses throughout from 4 to 8 feet
3												
4												
5												
6		34			SG25SG004		0.2	73.3				
7												
8											CL	
9												
10		34										
11												
12					SG25SG005		0	71.3				
13												
14		34							▽			
15												
16												Total depth of boring = 16 feet
17												
18												
19												
20												
21												
22												
23												
24												
25												
26												
27												
28												
29												
30												
31												
32												
33												
34												
35												

Tetra Tech EM Inc.

Log of Soil-Gas Boring: SG25B

Logged By: KATHY VANDENHEUVEL
Logging Consultant: TETRA TECH
Drilling Company: GREGG

Project: HPS Parcel E Nonstandard Data Gaps
Project No: G90160030301020711
Location: Parcel E IR-01/21 Landfill
Surface Elevation (feet): 21.88
Top of Casing Elevation (feet MSL): NA

Drilling Method: DIRECT-PUSH
Boring Started: 04/01/02
Completed: 04/01/02
Boring Depth (feet bgs): 16.00
Boring Diameter (inches): 2.00

DEPTH (FEET)	DRIVE INTERVAL	RECOVERY (IN)	BLOW COUNT	LAB SAMPLE	SOIL GAS SAMPLE ID	OVM (PPM)	VOCS (PPM)	METHANE (% BY VOLUME IN AIR)	WATER LEVEL	GRAPHIC LOG	ASTM SOIL TYPE	DESCRIPTION
0												Ground Surface
0											CL	SANDY CLAY: with organic matter and wood chips (from lumber yard)
1											CL	
2		24										SANDY CLAY WITH SAND: yellowish brown (10YR 5/6); slightly moist; fine- to medium-grained sand
3											SC	
4					SG25SG007		0	54.8				CLAYEY SAND: yellowish brown (10YR 5/6); slightly moist; fine- to medium-grained
5												
6		48										LEAN CLAY WITH SAND: dark bluish gray (5B 4/1); 10% fine-grained sand
7												
8											CL	
9												
10		46										
11							0	0.2				
12											SP	Poorly graded SAND WITH CLAY: dark bluish gray (5B 4/1); fine- to medium-grained; 10% clay
13												
14		24									CL	CLAY WITH SAND: dark bluish gray (5B 4/1); about 10% fine sand
15												
16												Total depth of boring = 16 feet
17												
18												
19												
20												
21												
22												
23												
24												
25												
26												
27												
28												
29												
30												
31												
32												
33												
34												
35												

Tetra Tech EM Inc.

Log of Soil-Gas Boring: SG25C

Logged By: KATHY VANDENHEUVEL
Logging Consultant: TETRA TECH
Drilling Company: GREGG

Project: HPS Parcel E Nonstandard Data Gaps
Project No: G90160030301020711
Location: Parcel E IR-01/21 Landfill
Surface Elevation (feet): 23.01
Top of Casing Elevation (feet MSL): NA

Drilling Method: DIRECT-PUSH
Boring Started: 04/03/02
Completed: 04/03/02
Boring Depth (feet bgs): 8.00
Boring Diameter (inches): 2.00

DEPTH (FEET)	DRIVE INTERVAL	RECOVERY (IN)	BLOW COUNT	LAB SAMPLE	SOIL GAS SAMPLE ID	OVM (PPM)	VOCS (PPM)	METHANE (% BY VOLUME IN AIR)	WATER LEVEL	GRAPHIC LOG	ASTM SOIL TYPE	DESCRIPTION
0												Ground Surface
1											SW	Well-graded SAND: (10YR 5/3); very slightly moist; with gravel
2		31										
3					SG25SG008		6.6	0			SW	SAND WITH CLAY AND GRAVEL: olive gray (5Y 5/2); very dense; 10% clay; 10% gravel
4												
5												Clay content decreases with depth to no clay at 8 feet; sand is serpentinite in content
6		24									SW	
7												
8												Total depth of boring = 8 feet
9												
10												
11												
12												
13												
14												
15												
16												
17												
18												
19												
20												
21												
22												
23												
24												
25												
26												
27												
28												
29												
30												
31												
32												
33												
34												
35												

Tetra Tech EM Inc.

Log of Soil-Gas Boring: SG25D

Logged By: KATHY VANDENLEUVEL
Logging Consultant: TETRA TECH
Drilling Company: GREGG

Project: HPS Parcel E Nonstandard Data Gaps
Project No: G90160030301020711
Location: Parcel E IR-01/21 Landfill
Surface Elevation (feet): 22.49
Top of Casing Elevation (feet MSL): NA

Drilling Method: DIRECT-PUSH
Boring Started: 04/05/02
Completed: 04/05/02
Boring Depth (feet bgs): 16.00
Boring Diameter (inches): 2.00

DEPTH (FEET)	DRIVE INTERVAL	RECOVERY (IN)	BLOW COUNT	LAB SAMPLE	SOIL GAS SAMPLE ID	OVM (PPM)	VOCS (PPM)	METHANE (% BY VOLUME IN AIR)	WATER LEVEL	GRAPHIC LOG	ASTM SOIL TYPE	DESCRIPTION
0												Ground Surface
0–1											SP	SAND: about 50% sawdust
1											GP	GRAVEL: dark gray (5YR 4/1); up to 1-inch diameter
2		48										
3–4					SG25SG009		0.4	0.1				Poorly graded SAND WITH GRAVEL AND CLAY: brown (10YR 4/3); fine- to medium-grained; 10% clay
4–8											SP	Clay content increases to 20%; very dense
6		48										
8											CL	CLAY WITH SAND: dark grayish brown (10YR 4/2); 10% sand
9											GP	GRAVEL: dark grayish brown; up to 1-inch diameter; with olive gray (5Y 5/2) sand
10		48										
11											SP	Poorly graded SAND: yellowish brown (10YR 5/6); saturated; fine- to medium-grained
12					SG25SG010		1.5	0.2				
13											CL	CLEAN CLAY WITH SAND: dark gray (10YR 4/1); moist; 10% sand
14		48										
15–16											SP	Poorly graded SAND: light olive brown (2.5Y 5/3); fine- to medium-grained
16												Total depth of boring = 16 feet

Tetra Tech EM Inc.

Log of Soil-Gas Boring: SG26A

Logged By: KATHY VANDENHEUVEL
Logging Consultant: TETRA TECH
Drilling Company: GREGG

Project: HPS Parcel E Nonstandard Data Gaps
Project No: G90160030301020711
Location: Parcel E IR-01/21 Landfill
Surface Elevation (feet): 18.33
Top of Casing Elevation (feet MSL): NA

Drilling Method: DIRECT-PUSH
Boring Started: 04/03/02
Completed: 04/03/02
Boring Depth (feet bgs): 8.00
Boring Diameter (inches): 2.00

DEPTH (FEET)	DRIVE INTERVAL	RECOVERY (IN)	BLOW COUNT	LAB SAMPLE	SOIL GAS SAMPLE ID	OVM (PPM)	VOCS (PPM)	METHANE (% BY VOLUME IN AIR)	WATER LEVEL	GRAPHIC LOG	ASTM SOIL TYPE	DESCRIPTION
0												Ground Surface
0–4		36									CL	Asphalt (4 inches) SANDY CLAY WITH OCCASIONAL GRAVEL: moist; gravel up to 1-inch diameter
4–8		12			SG26SG001		1.9	32.9			SP	Poorly graded SAND WITH GRAVEL No groundwater encountered Refusal at 8 feet due to debris
8												Total depth of boring = 8 feet

Tetra Tech EM Inc.

Log of Soil-Gas Boring: SG27A

Logged By: KATHY VANDENHEUVEL
Logging Consultant: TETRA TECH
Drilling Company: GREGG

Project: HPS Parcel E Nonstandard Data Gaps
Project No: G90160030301020711
Location: Parcel E IR-01/21 Landfill
Surface Elevation (feet): 18.86
Top of Casing Elevation (feet MSL): NA

Drilling Method: DIRECT-PUSH
Boring Started: 04/03/02
Completed: 04/03/02
Boring Depth (feet bgs): 16.00
Boring Diameter (inches): 2.00

DEPTH (FEET)	DRIVE INTERVAL	RECOVERY (IN)	BLOW COUNT	LAB SAMPLE	SOIL GAS SAMPLE ID	OVM (PPM)	VOCS (PPM)	METHANE (% BY VOLUME IN AIR)	WATER LEVEL	GRAPHIC LOG	ASTM SOIL TYPE	DESCRIPTION
0												Ground Surface
1												Asphalt (4 inches)
2		43									GP	Organic matter (2 inches)
3												GRAVEL WITH CLAY: dark gray (N4/); moist; 20% clay
4												LEAN CLAY WITH SAND AND GRAVEL: dark gray (10YR 4/1); well-graded sand; gravel content increases from 4 to 7 feet
5											CL	
6		31			SG27SG001		7.3	0.1				
7												LEAN CLAY WITH SAND: dark greenish gray (5G 4/1); moist; 10% fine-grained sand
8												
9											CL	
10		36										
11											CL	LEAN CLAY: very dark gray (N3/); moist
12							4.6	0.2			SP	
13											CL	SAND WITH CLAY AND GRAVEL: dark yellowish brown (10YR 4/6); gravel up to 1-inch diameter
14		36										
15											GP	CLAY WITH SAND AND GRAVEL: dark greenish gray (5G 4/1); moist; 10% sand
16												GRAVEL WITH SAND AND CLAY: dark yellowish brown (10YR 4/4); gravel up to 1-inch diameter; 20% sand; 10% clay
17												
18												Total depth of boring = 16 feet
19												
20												
21												
22												
23												
24												
25												
26												
27												
28												
29												
30												
31												
32												
33												
34												
35												

Tetra Tech EM Inc.

Log of Soil-Gas Boring: SG27B

Logged By: KATHY VANDENHEUVEL
Logging Consultant: TETRA TECH
Drilling Company: GREGG

Project: HPS Parcel E Nonstandard Data Gaps
Project No: G90160030301020711
Location: Parcel E IR-01/21 Landfill
Surface Elevation (feet): 18.36
Top of Casing Elevation (feet MSL): NA

Drilling Method: DIRECT-PUSH
Boring Started: 04/03/02
Completed: 04/03/02
Boring Depth (feet bgs): 16.00
Boring Diameter (inches): 2.00

DEPTH (FEET)	DRIVE INTERVAL	RECOVERY (IN)	BLOW COUNT	LAB SAMPLE	SOIL GAS SAMPLE ID	OVM (PPM)	VOCS (PPM)	METHANE (% BY VOLUME IN AIR)	WATER LEVEL	GRAPHIC LOG	ASTM SOIL TYPE	DESCRIPTION
0												Ground Surface
1												Asphalt (4 inches)
2		36									SP	Poorly graded SAND WITH GRAVEL: grayish brown (2.5Y 5/2); 30% gravel decresaing to 10% with depth
3												
4											CL	CLAY WITH SAND: very dark gray (N3/); moist; 10% sand
5												CLAY WITH GRAVEL: dark gray (N4/); 30% gravel
6		38			SG27SG002		0.3	46.6			CL	
7												CLAY WITH SAND AND GRAVEL: 10% sand; gravel up to 1-inch diameter
8												.
9												
10		24										
11											CL	
12												No field screening sample collected at 12 feet due to refusal
13												
14		38										
15												
16												Total depth of boring = 16 feet
17												
18												
19												
20												
21												
22												
23												
24												
25												
26												
27												
28												
29												
30												
31												
32												
33												
34												
35												

Tetra Tech EM Inc.

Log of Boring: GMP01

Logged By: REBECCA LESHER
Logging Consultant: TETRA TECH
Drilling Company: GREGG

Project: GMP WELLS
Project No: DO 003
Location: PARCEL E LANDFILL
Ground Surface Elevation (feet MSL): 18.23
Top of Casing Elevation (feet MSL): NA

Drilling Method: HSA
Boring Started: 04/15/02
Completed: 04/15/02
Boring Depth (feet bgs): 14.00
Boring Diameter (inches): 5.50
Casing Diameter (inches): 0.75

DEPTH (FEET)	DRIVE INTERVAL	RECOVERY (IN)	SAMPLE ID	OVM (PPM)	WATER LEVEL	GRAPHIC LOG	ASTM SOIL TYPE	DESCRIPTION	COMMENTS
0								Ground Surface	NOTE: LITHOLOGY WAS LOGGED FROM THE SG01 BORING.
1							CL	SANDY CLAY: dark gray (10YR 4/1); moisture content decreases; lean clay; 30% sand; sand content increases to well-graded	
8							SC	CLAYEY SAND: dark bluish gray (5B 4/1); well-graded with occasional gravel; increase in moisture content	
14								Total depth of boring = 14 feet	

Tetra Tech EM Inc.

Log of Boring: GMP01A

Logged By: REBECCA LESHER
Logging Consultant: TETRA TECH
Drilling Company: GREGG

Project: GMP WELLS
Project No: DO 003
Location: PARCEL E LANDFILL
Ground Surface Elevation (feet MSL): 18.80
Top of Casing Elevation (feet MSL): NA

Drilling Method: HSA
Boring Started: 09/12/02
Completed: 09/12/02
Boring Depth (feet bgs): 14.00
Boring Diameter (inches): 5.50
Casing Diameter (inches): 0.75

DEPTH (FEET)	DRIVE INTERVAL	RECOVERY (IN)	SAMPLE ID	OVM (PPM)	WATER LEVEL	GRAPHIC LOG	ASTM SOIL TYPE	DESCRIPTION	COMMENTS
0								Ground Surface	
							L	SANDY CLAY: dark gray (10YR 4/1); 30% sand; 70% lean clay; increasing sand content to a well graded sand; decrease in moisture	NOTE: GMP01A IS A REPLACEMENT FOR GMP01. LITHOLOGY IS FROM THE SG01 BORING.
8							SC	Well-gradedCLAYEY SAND: dark bluish gray (5B 4/1) ; with occasional gravel; increase in moisture content	
13					▽				
14								Total depth of boring = 14 feet	

Tetra Tech EM Inc.

Log of Boring: GMP02

Logged By: REBECCA LESHER
Logging Consultant: TETRA TECH
Drilling Company: GREGG

Project: GMP WELLS
Project No: DO 003
Location: PARCEL E LANDFILL
Ground Surface Elevation (feet MSL): 17.91
Top of Casing Elevation (feet MSL): NA

Drilling Method: HSA
Boring Started: 04/15/02
Completed: 04/15/02
Boring Depth (feet bgs): 14.00
Boring Diameter (inches): 5.50
Casing Diameter (inches): 0.75

DEPTH (FEET)	DRIVE INTERVAL	RECOVERY (IN)	SAMPLE ID	OVM (PPM)	WATER LEVEL	GRAPHIC LOG	ASTM SOIL TYPE	DESCRIPTION	COMMENTS
								Ground Surface	
0							CL	SANDY CLAY: dark grayish brown (10YR 4/2); with organic matter (grass)	NOTE: LITHOLOGY WAS LOGGED FROM THE SG02 BORING.
1								SANDY CLAY WITH GRAVEL: very dark gray (10YR 3/1); 20% gravel (up to 1-inch diameter)	
2									
3									
4									
5									
6									
7									
8								SANDY CLAY WITH GRAVEL: dark greenish gray (5BG4/1); 20% gravel; 10% well-graded sand	
9									
10									
11									
12									
13					▽				
14								Total depth of boring = 14 feet	
15									
16									
17									
18									
19									
20									
21									
22									
23									
24									
25									
26									
27									
28									
29									
30									
31									
32									
33									
34									
35									

Tetra Tech EM Inc.

Log of Boring: GMP02A

Logged By: REBECCA LESHER
Logging Consultant: TETRA TECH
Drilling Company: GREGG

Project: GMP WELLS
Project No: DO 003
Location: PARCEL E LANDFILL
Ground Surface Elevation (feet MSL): 18.60
Top of Casing Elevation (feet MSL): NA

Drilling Method: HSA
Boring Started: 09/12/02
Completed: 09/12/02
Boring Depth (feet bgs): 14.00
Boring Diameter (inches): 5.50
Casing Diameter (inches): 0.75

DEPTH (FEET)	DRIVE INTERVAL	RECOVERY (IN)	SAMPLE ID	OVM (PPM)	WATER LEVEL	GRAPHIC LOG	ASTM SOIL TYPE	DESCRIPTION	COMMENTS
								Ground Surface	
0							CL	SANDY CLAY: dark grAyish brown (10YR 4/2) ; with organic matter (grass)	NOTE: GMP02A IS A REPLACEMENT FOR GMP02. LITHOLOGY IS FROM SG02 BORING.
1								SANDY CLAY WITH GRAVEL: very dark gray; 20% gravel (up to 1-inch diameter)	
2									
3									
4									
5									
6									
7									
8								SANDY CLAY WITH GRAVEL: dark greenish gray (5BG 4/1); 20% gravel; 10% to 20% well-graded sand	
9									
10									
11									
12							sw	Well-graded SAND WITH GRAVEL AND CLAY: brown (10YR 4/2); saturated at 13 feet; 10% clay	
13					▽				
14								Total depth of boring = 14 feet	
15									
16									
17									
18									
19									
20									
21									
22									
23									
24									
25									
26									
27									
28									
29									
30									
31									
32									
33									
34									
35									

Tetra Tech EM Inc.

Log of Boring: GMP03

Logged By: REBECCA LESHER
Logging Consultant: TETRA TECH
Drilling Company: GREGG

Project: GMP WELLS
Project No: DO 003
Location: PARCEL E LANDFILL
Ground Surface Elevation (feet MSL): 18.43
Top of Casing Elevation (feet MSL): NA

Drilling Method: HSA
Boring Started: 04/15/02
Completed: 04/15/02
Boring Depth (feet bgs): 14.00
Boring Diameter (inches): 5.50
Casing Diameter (inches): 0.75

DEPTH (FEET)	DRIVE INTERVAL	RECOVERY (IN)	SAMPLE ID	OVM (PPM)	WATER LEVEL	GRAPHIC LOG	ASTM SOIL TYPE	DESCRIPTION	COMMENTS
								Ground Surface	
0							CL	SANDY CLAY: dark grayish brown (10YR 4/2); with organic matter (grass)	NOTE: LITHOLOGY WAS LOGGED FROM THE SG03 BORING.
1								SANDY CLAY WITH GRAVEL: dark gray (10YR 4/1); 10% gravel (up to 1-inch diameter)	
2							SC	CLAYEY SAND WITH GRAVEL: dark bluish gray (5B 4/1); 30% clay; 25% gravel	
3									
4									
5									
6									
7									
8									
9									
10									
11									
12									
13					▽				
14								Total depth of boring = 14 feet	
15									
16									
17									
18									
19									
20									
21									
22									
23									
24									
25									
26									
27									
28									
29									
30									
31									
32									
33									
34									
35									

Tetra Tech EM Inc.

Log of Boring: GMP03A

Logged By: REBECCA LESHER
Logging Consultant: TETRA TECH
Drilling Company: GREGG

Project: GMP WELLS
Project No: DO 003
Location: PARCEL E LANDFILL
Ground Surface Elevation (feet MSL): 17.50
Top of Casing Elevation (feet MSL): NA

Drilling Method: HSA
Boring Started: 09/12/02
Completed: 09/12/02
Boring Depth (feet bgs): 14.00
Boring Diameter (inches): 5.50
Casing Diameter (inches): 0.75

DEPTH (FEET)	DRIVE INTERVAL	RECOVERY (IN)	SAMPLE ID	OVM (PPM)	WATER LEVEL	GRAPHIC LOG	ASTM SOIL TYPE	DESCRIPTION	COMMENTS
								Ground Surface	
0							CL	SANDY CLAY: dark grayish brown (10YR 4/2); with organic matter (grass)	NOTE: GMP03A IS A REPLACEMENT FOR GMP03. LITHOLOGY WAS LOGGED FROM THE SG03 BORING.
1								SANDY CLAY WITH GRAVEL: dark gray (10YR 4/1); 10% gravel (up to 1-inch diameter)	
2							SC	CLAYEY SND WITH GARVEL: dark bluish gray (5B 4/1); 30% clay; 25% gravel .	
3									
4									
5									
6									
7									
8									
9									
10									
11									
12									
13					▽				
14								Total depth of boring = 14 feet	
15									
16									
17									
18									
19									
20									
21									
22									
23									
24									
25									
26									
27									
28									
29									
30									
31									
32									
33									
34									
35									

Tetra Tech EM Inc.

Log of Boring: GMP04

Logged By: REBECCA LESHER
Logging Consultant: TETRA TECH
Drilling Company: GREGG

Project: GMP WELLS
Project No: DO 003
Location: PARCEL E LANDFILL
Ground Surface Elevation (feet MSL): 16.51
Top of Casing Elevation (feet MSL): NA

Drilling Method: HSA
Boring Started: 04/15/02
Completed: 04/15/02
Boring Depth (feet bgs): 14.00
Boring Diameter (inches): 5.50
Casing Diameter (inches): 0.75

DEPTH (FEET)	DRIVE INTERVAL	RECOVERY (IN)	SAMPLE ID	OVM (PPM)	WATER LEVEL	GRAPHIC LOG	ASTM SOIL TYPE	DESCRIPTION	COMMENTS
								Ground Surface	NOTE: LITHOLOGY WAS LOGGED FROM THE SG04 BORING.
0							CL	CLAY WITH SAND: dusky red (2.5YR 4/2); fine sand	
1								SANDY CLAY WITH GRAVEL: dark gray (7.5YR 4/1); fine to medium sand	
2									
3								CLAY WITH SAND: brown (7.5YR 4/4); slightly moist; fine to medium sand	
4									
5								SANDY CLAY WITH GRAVEL: dark gray (7.5YR 4/1); slightly moist; 30 to 40% fine to medium sand	
6									
7									
8							SC	Sand conetnt increases to CLAYEY SAND: greenish gray (5G/5/i); slightly moist to moist	
9									
10							CL	CLAY WITH SAND: very dark grayish brown (10YR 3/2); moist; 10% fine sand	
11									
12									
13					▽				
14								Total depth of boring = 14 feet	
15									
16									
17									
18									
19									
20									
21									
22									
23									
24									
25									
26									
27									
28									
29									
30									
31									
32									
33									
34									
35									

Tetra Tech EM Inc.

Log of Boring: GMP04A

Logged By: REBECCA LESHER
Logging Consultant: TETRA TECH
Drilling Company: GREGG

Project: GMP WELLS
Project No: DO 003
Location: PARCEL E LANDFILL
Ground Surface Elevation (feet MSL): 16.60
Top of Casing Elevation (feet MSL): NA

Drilling Method: HSA
Boring Started: 09/12/02
Completed: 09/12/02
Boring Depth (feet bgs): 14.00
Boring Diameter (inches): 5.50
Casing Diameter (inches): 0.75

DEPTH (FEET)	DRIVE INTERVAL	RECOVERY (IN)	SAMPLE ID	OVM (PPM)	WATER LEVEL	GRAPHIC LOG	ASTM SOIL TYPE	DESCRIPTION	COMMENTS
								Ground Surface	
0							CL	CLAY WITH SAND: dusky red (2.5YR 4/2); fine sand	NOTE: GMP04A IS A REPLACEMENT FOR GMP04. LITHOLOGY IS FROM THE SG04 BORING.
1								SANDY CLAY WITH GRAVEL: dark gray (7.5 YR 4/1); fine to medium snd	
2									
3								CLAY WITH SAND: brown (7.5YR 4/4); slightly moist; fine to medium sand	
4									
5								SANDY CLAY WITH GRAVEL: dark gray (7.5YR 4/1); slightly moist; 30 to 40% fine to medium sand	
6									
7									
8							SC	Sand content increases to CLAYEY SAND: greenish gray (5G/5/i); slightly moist to moist	
9									
10							CL	CLAYE WITH SAND: very dark grayish brown (10YR 3/2); moist; 10% fine sand	
11									
12									
13									
14								Total depth of boring = 14 feet	
15									
16									
17									
18									
19									
20									
21									
22									
23									
24									
25									
26									
27									
28									
29									
30									
31									
32									
33									
34									
35									

Tetra Tech EM Inc.

Log of Boring: GMP05

Logged By: REBECCA LESHER
Logging Consultant: TETRA TECH
Drilling Company: GREGG

Project: GMP WELLS
Project No: DO 003
Location: PARCEL E LANDFILL
Ground Surface Elevation (feet MSL): 14.51
Top of Casing Elevation (feet MSL): NA

Drilling Method: HSA
Boring Started: 04/15/02
Completed: 04/15/02
Boring Depth (feet bgs): 14.00
Boring Diameter (inches): 5.50
Casing Diameter (inches): 0.75

DEPTH (FEET)	DRIVE INTERVAL	RECOVERY (IN)	SAMPLE ID	OVM (PPM)	WATER LEVEL	GRAPHIC LOG	ASTM SOIL TYPE	DESCRIPTION	COMMENTS
0								Ground Surface	
							SC	Well-graded CLAYEY SAND: dark gray (10YR 4/1); moist	
1							CL	SANDY CLAY: very dark grayish brown (2.5Y 3/2); slightly moist; fine to medium, subangular to subrounded sand	
2									
3									
4									
5								SANDY CLAY with occasional gravel: dark gray(5Y 4/1)	
6									
7									
8									
9									
10									
11									
12									
13									
14								Boring not logged from 12 to 14 feet.	
								Total depth of boring = 14 feet	
15									
16									
17									
18									
19									
20									
21									
22									
23									
24									
25									
26									
27									
28									
29									
30									
31									
32									
33									
34									
35									

Tetra Tech EM Inc.

Log of Boring: GMP05A

Logged By: REBECCA LESHER
Logging Consultant: TETRA TECH
Drilling Company: GREGG

Project: GMP WELLS
Project No: DO 003
Location: PARCEL E LANDFILL
Ground Surface Elevation (feet MSL):
Top of Casing Elevation (feet MSL): NA

Drilling Method: HSA
Boring Started: 09/12/02
Completed: 09/12/02
Boring Depth (feet bgs): 13.00
Boring Diameter (inches): 5.50
Casing Diameter (inches): 0.75

DEPTH (FEET)	DRIVE INTERVAL	RECOVERY (IN)	SAMPLE ID	OVM (PPM)	WATER LEVEL	GRAPHIC LOG	ASTM SOIL TYPE	DESCRIPTION	COMMENTS
								Ground Surface	NOTE: GMP05A IS A REPLACEMENT WELL FOR GMP05. LITHOLOGY IS FROM THE SG05A BORING.
0							SC	Well-graded CLAYEY SAND: dark gray (10YR 4/1); moist	
1							CL	SANDY CLAY: very dark grayish brown (2.5Y 3/2); slightly moist; fine to medium, subangular to subrounded sand	
2									
3									
4								SANDY CLAY with occasional gravel: dark gray (5Y 4/1)	
5									
6									
7									
8									
9									
10									
11									
12									
13								Boring not logged from 12 to 13 feet.	
								Total depth of boring = 13 feet	
14									
15									
16									
17									
18									
19									
20									
21									
22									
23									
24									
25									
26									
27									
28									
29									
30									
31									
32									
33									
34									
35									

Tetra Tech EM Inc.

Log of Boring: GMP05B

Logged By: KATHY VENDENHEUVEL
Logging Consultant: TETRA TECH
Drilling Company: GREGG

Project: GMP WELLS
Project No: DO 003
Location: PARCEL E LANDFILL
Ground Surface Elevation (feet MSL): 15.40
Top of Casing Elevation (feet MSL): NA

Drilling Method: HSA
Boring Started: 11/25/02
Completed: 11/25/02
Boring Depth (feet bgs): 14.00
Boring Diameter (inches): 5.50
Casing Diameter (inches):

DEPTH (FEET)	DRIVE INTERVAL	RECOVERY (IN)	SAMPLE ID	OVM (PPM)	WATER LEVEL	GRAPHIC LOG	ASTM SOIL TYPE	DESCRIPTION	COMMENTS
0								Ground Surface	NOTE: GMP05B IS A REPLACEMENT FOR GMP05A. LITHOLOGY IS FROM THE SG05A BORING.
							SC	Well-graded CLAYEY SAND: dark gray (10YR 4/1); moist	
1							CL	SANDY CLAY: very dark grayish brown (2.5Y 3/2); slightly moist; fine to medium, subangular to subrounded sand	
2									
3									
4								SANDY CLAY with occasional gravel: dark gray (5Y 4/1)	
5									
6									
7									
8									
9									
10									
11									
12									
13								Boring not logged from 12 to 14.0 feet	
14								Total depth of boring = 14 feet	
15									
16									
17									
18									
19									
20									
21									
22									
23									
24									
25									
26									
27									
28									
29									
30									
31									
32									
33									
34									
35									

Tetra Tech EM Inc.

Log of Boring: GMP06

Logged By: REBECCA LESHER
Logging Consultant: TETRA TECH
Drilling Company: GREGG

Project: GMP WELLS
Project No: DO 003
Location: PARCEL E LANDFILL
Ground Surface Elevation (feet MSL): 17.03
Top of Casing Elevation (feet MSL): NA

Drilling Method: HSA
Boring Started: 04/15/02
Completed: 04/15/02
Boring Depth (feet bgs): 14.00
Boring Diameter (inches): 5.50
Casing Diameter (inches): 0.75

DEPTH (FEET)	DRIVE INTERVAL	RECOVERY (IN)	SAMPLE ID	OVM (PPM)	WATER LEVEL	GRAPHIC LOG	ASTM SOIL TYPE	DESCRIPTION	COMMENTS
								Ground Surface	
0–3							SC	CLAYEY SAND: very dark grayish brown (2.5Y 3/2); slightly moist; fine to medium, subangular to subrounded sand	NOTE: LITHOLOGY WAS LOGGED FROM THE SG06 BORING.
3–8							CL	LEAN CLAY: reddish brown (3.5Y 4/4); 5 to 10% fine sand Color changes to very dark grayish brown (2.5Y 3/2), sand content increases Sand content decreases to about 20%	
8–14							SC	Well-graded CLAYEY SAND WITH GRAVEL: very dark gray (N3/); slightly moist; gravel and sand are serpentinite in content; gravel up to 1-inch diameter; no staining	
14								Total depth of boring = 14 feet	

Tetra Tech EM Inc.

Log of Boring: GMP06A

Logged By: REBECCA LESHER
Logging Consultant: TETRA TECH
Drilling Company: GREGG

Project: GMP WELLS
Project No: DO 003
Location: PARCEL E LANDFILL
Ground Surface Elevation (feet MSL):
Top of Casing Elevation (feet MSL): NA

Drilling Method: HSA
Boring Started: 04/15/02
Completed: 04/15/02
Boring Depth (feet bgs): 14.00
Boring Diameter (inches): 5.50
Casing Diameter (inches): 0.75

DEPTH (FEET)	DRIVE INTERVAL	RECOVERY (IN)	SAMPLE ID	OVM (PPM)	WATER LEVEL	GRAPHIC LOG	ASTM SOIL TYPE	DESCRIPTION	COMMENTS
								Ground Surface	
0–3							SC	CLAYEY SAND: very dark grayish brown (2.5Y 3/2); slightly moist fine to medium, subangular to subround sand	NOTE: GMP06A IS A REPLACEMENT FOR GMP06. LITHOLOGY IS FROM THE SG06 BORING.
3–8							CL	LEAN CLAY: reddish brown (3.5Y 4/4); 5 to 10% fine sand Color changes to very dark grayish brown (2.5Y 2/3); sand content increases Sand content decreases to about 20%	
8–14							SC	Well-graded CLAYEY SAND WITH GRAVEL: very dark gray; slightly moist; sand and gravel are serpentinite in content; gravel up to 1-inch diameter	
14								Total depth of boring = 14 feet	

Tetra Tech EM Inc.

Log of Boring: GMP06B

Logged By: REBECCA LESHER
Logging Consultant: TETRA TECH
Drilling Company: GREGG

Project: GMP WELLS
Project No: DO 003
Location: PARCEL E LANDFILL
Ground Surface Elevation (feet MSL): 15.10
Top of Casing Elevation (feet MSL): NA

Drilling Method: HSA
Boring Started: 11/25/02
Completed: 11/25/02
Boring Depth (feet bgs): 14.00
Boring Diameter (inches): 5.50
Casing Diameter (inches): 0.75

DEPTH (FEET)	DRIVE INTERVAL	RECOVERY (IN)	SAMPLE ID	OVM (PPM)	WATER LEVEL	GRAPHIC LOG	ASTM SOIL TYPE	DESCRIPTION	COMMENTS
								Ground Surface	
0							SC	CLAYEY SAND: very dark grayish brown (2.5Y 3/2); slightly moist; fine to medium, subangular to subrounded sand	NOTE: GMP06B IS A REPLACEMENT FOR GMP06A. LITHOLOGY IS FROM THE SG06 BORING.
1									
2									
3							CL	LEAN CLAY: reddish brown (2.5Y 3/2); 5 to 10% fine sand	
4								Color changes to very dark grayish brown (2.5Y 3/2); sand content increases	
5									
6								Sand content decreases to about 20%	
7									
8							SC	Well-graded CLAYEY SAND WITH GRAVEL: very dark gray (N3/); slightly moist; sand andgravel are serpentinite in content; gravel up to 1-inch diameter; no staining	
9									
10									
11									
12									
13									
14								Total depth of boring = 14 feet	
15									
16									
17									
18									
19									
20									
21									
22									
23									
24									
25									
26									
27									
28									
29									
30									
31									
32									
33									
34									
35									

Tetra Tech EM Inc.

Log of Boring: GMP07

Logged By: REBECCA LESHER
Logging Consultant: TETRA TECH
Drilling Company: GREGG

Project: GMP WELLS
Project No: DO 003
Location: PARCEL E LANDFILL
Ground Surface Elevation (feet MSL): 16.90
Top of Casing Elevation (feet MSL): NA

Drilling Method: HSA
Boring Started: 04/15/02
Completed: 04/15/02
Boring Depth (feet bgs): 14.00
Boring Diameter (inches): 5.50
Casing Diameter (inches): 0.75

DEPTH (FEET)	DRIVE INTERVAL	RECOVERY (IN)	SAMPLE ID	OVM (PPM)	WATER LEVEL	GRAPHIC LOG	ASTM SOIL TYPE	DESCRIPTION	COMMENTS
0								Ground Surface	NOTE: LITHOLOGY WAS LOGGED FROM THE SG07 BORING.
								Asphalt and concrete	
1									
2							CL	Black staining from 1.5 to 2.0 feet CLAY WITH GRAVEL: 1.5-foot clay lens, containing much more gravel (about 10% fine gravel); slightly moist; no staining	
3									
4									
5									
6									
7								SANDY CLAY: reddish brown (5YR 4/4); slightly moist; about 20% fine to medium sand; occasional fine gravel; 2-inch lens of fine sand (light gray) at 4.25 feet	
8									
9							GR	Gravel content increases at 9.5 to 10.5 feet; gravel lens (serpentinite)	
							CL	SANDY CLAY: very dark gray (N3/); slightly moist; 30% fine sand; occasional gravelly layer (about 1 to 2 inches thick); soils saturated by about 11 feet; no staining	
10									
11									
12									
13					▽				
14								Total depth of boring = 14 feet	
15									
16									
17									
18									
19									
20									
21									
22									
23									
24									
25									
26									
27									
28									
29									
30									
31									
32									
33									
34									
35									

Tetra Tech EM Inc.

Log of Boring: GMP07A

Logged By: REBECCA LESHER
Logging Consultant: TETRA TECH
Drilling Company: GREGG

Project: GMP WELLS
Project No: DO 003
Location: PARCEL E LANDFILL
Ground Surface Elevation (feet MSL): 15.20
Top of Casing Elevation (feet MSL): NA

Drilling Method: HSA
Boring Started: 09/12/02
Completed: 09/12/02
Boring Depth (feet bgs): 14.00
Boring Diameter (inches): 5.50
Casing Diameter (inches): 0.75

DEPTH (FEET)	DRIVE INTERVAL	RECOVERY (IN)	SAMPLE ID	OVM (PPM)	WATER LEVEL	GRAPHIC LOG	ASTM SOIL TYPE	DESCRIPTION	COMMENTS
								Ground Surface	
0							CL	SANDY CLAY: reddish brown (5YR 4/4); slightly moist; about 20% fine to medium sand; occasional fine gravel Black staining from 1.5 to 2.0 feet 2-inch lens of fine sand (light gray) at 4.25 feet	NOTE: GMP07A IS A REPLACEMENT FOR GMP07. LITHOLOGY IS FROM THE SG07 BORING.
1									
2									
3									
4									
5								CLAY WITH GRAVEL: slightly moist; about 10% fine gravel; clay lens containing much more gravel from 5.5 to 7 feet	
6									
7									
8								CLAY WITH GRAVEL: ery slightly moist, no staining.	
9									
10							GR	Gravel content increases Gravel lens from 9.5 to 10.5 feet (serpentinite)	
11							CL	SANDY CLAY: very dark gray (N3/); slightly moist; 30% fine sand; occasional gravelly layer (about 1 to 2 inches thick); no staining; soils saturated by 11 feet	
12									
13					▽				
14								Total depth of boring = 14 feet	
15									
16									
17									
18									
19									
20									
21									
22									
23									
24									
25									
26									
27									
28									
29									
30									
31									
32									
33									
34									
35									

Tetra Tech EM Inc.

Log of Boring: GMP08

Logged By: REBECCA LESHER
Logging Consultant: TETRA TECH
Drilling Company: GREGG

Project: GMP WELLS
Project No: DO 003
Location: PARCEL E LANDFILL
Ground Surface Elevation (feet MSL): 16.68
Top of Casing Elevation (feet MSL): NA

Drilling Method: HSA
Boring Started: 04/16/02
Completed: 04/16/02
Boring Depth (feet bgs): 13.00
Boring Diameter (inches): 5.50
Casing Diameter (inches): 0.75

DEPTH (FEET)	DRIVE INTERVAL	RECOVERY (IN)	SAMPLE ID	OVM (PPM)	WATER LEVEL	GRAPHIC LOG	ASTM SOIL TYPE	DESCRIPTION	COMMENTS
								Ground Surface	
0							CL	SANDY CLAY: dark yellowish brown (10YR 3/4); lean clay; 40$ fine sand	NOTE: LITHOLOGY WAS LOGGED FROM SG08 BORING.
1									
2									
3							SP	Poorly graded SAND: coarse, subangular to subrounded	
							CL		
4								LEAN CLAY WITH SAND: dark yellowish brown (10YR 4/4); slightly moist; about 10% fine sand; no staining	
5									
6								LEAN CLAY: dark reddish brown (5YR 3/4); 2-inch lens of blackish soil at 4.75 feet	
7							SC	CLAYEY SAND: greenish gray (5GY 5/1); slightly moist; about 30% lean clay; serpentinite in content	
8									
9							CL	LEAN CLAY: dark reddish brown (5YR 3/4); slightly moist	
10							SP	Poorly graded SAND: light gray sand (10YR 4/2); 100% fine-grained, with some fines	
11							CL		
12								Lens of slightly sandier material (20% fine sand); lean clay from 11 to 16 feet; saturated at 13.5 feet	
13									
14								Total depth of boring = 13 feet	
15									
16									
17									
18									
19									
20									
21									
22									
23									
24									
25									
26									
27									
28									
29									
30									
31									
32									
33									
34									
35									

Tetra Tech EM Inc.

Log of Boring: GMP08A

Logged By: REBECCA LESHER
Logging Consultant: TETRA TECH
Drilling Company: GREGG

Project: GMP WELLS
Project No: DO 003
Location: PARCEL E LANDFILL
Ground Surface Elevation (feet MSL): 13.10
Top of Casing Elevation (feet MSL): NA

Drilling Method: HSA
Boring Started: 09/12/02
Completed: 09/12/02
Boring Depth (feet bgs): 12.00
Boring Diameter (inches): 5.50
Casing Diameter (inches): 0.75

DEPTH (FEET)	DRIVE INTERVAL	RECOVERY (IN)	SAMPLE ID	OVM (PPM)	WATER LEVEL	GRAPHIC LOG	ASTM SOIL TYPE	DESCRIPTION	COMMENTS
0								Ground Surface	
0–3							CL	SANDY CLAY with occasional gravel: (10YR 3/1) very dark brown; 30% sand; very slightly moist	NOTE: GMP08A IS A REPLACEMENT FOR GMP08. LITHOLOGY IS FROM THE SG08.
4							SC		
4							CL	CLAYEY SAND: (5G 5/1) greenish grey; fine to medium grain	
5–6		14						SANDY CLAY: greenish gray (5BG 4/1)with occasional gravel:	
6–12								Poor recovery from 8 to 12 feet due to cobble/boulder	
10–11		24							
12								Total depth of boring = 12 feet	

Tetra Tech EM Inc.

Log of Boring: GMP09

Logged By: REBECCA LESHER
Logging Consultant: TETRA TECH
Drilling Company: GREGG

Project: GMP WELLS
Project No: DO 003
Location: PARCEL E LANDFILL
Ground Surface Elevation (feet MSL): 10.46
Top of Casing Elevation (feet MSL): NA

Drilling Method: HSA
Boring Started: 04/16/02
Completed: 04/16/02
Boring Depth (feet bgs): 10.00
Boring Diameter (inches): 5.50
Casing Diameter (inches): 0.75

DEPTH (FEET)	DRIVE INTERVAL	RECOVERY (IN)	SAMPLE ID	OVM (PPM)	WATER LEVEL	GRAPHIC LOG	ASTM SOIL TYPE	DESCRIPTION	COMMENTS
								Ground Surface	
0							CL	LEAN CLAY WITH SAND: dark yellowish brown (10YR 3/4); slightly moist about 10% fine sand	NOTE: LITHOLOGY WAS LOGGED FROM THE SG09 BORING.
1									
2									
3								SANDY CLAY: dark grayish brown (2.5Y 4/2); slightly moist; about 20% fine to to coarse sand; with occasional gravel	
4									
5									
6									
7							SP	Poorly graded SAND: olive (5Y 4/3); fine-grained	
							CL	LEAN CLAY: dark yellowish brown (10YR 3/4); very little to no sand	
8									
9					▽			SANDY CLAY: slightly moist; clay content increases with depth	
10								Total depth of boring = 10 feet	
11									
12									
13									
14									
15									
16									
17									
18									
19									
20									
21									
22									
23									
24									
25									
26									
27									
28									
29									
30									
31									
32									
33									
34									
35									

Tetra Tech EM Inc.

Log of Boring: GMP10

Logged By: KATHY VANDENHEUVEL
Logging Consultant: TETRA TECH
Drilling Company: GREGG

Project: GMP WELLS
Project No: DO 003
Location: PARCEL E LANDFILL
Ground Surface Elevation (feet MSL): 11.83
Top of Casing Elevation (feet MSL): NA

Drilling Method: HSA
Boring Started: 04/15/02
Completed: 04/15/02
Boring Depth (feet bgs): 7.00
Boring Diameter (inches): 5.50
Casing Diameter (inches): 0.75

DEPTH (FEET)	DRIVE INTERVAL	RECOVERY (IN)	SAMPLE ID	OVM (PPM)	WATER LEVEL	GRAPHIC LOG	ASTM SOIL TYPE	DESCRIPTION	COMMENTS
0								Ground Surface	
							SW	Well-graded SAND: dark grayish brown (10YR 4/2)	NOTE: LITHOLOGY WAS LOGGED FROM THE SG23 BORING.
1							SC	CLAYEY SAND WITH GRAVEL: very dark gray (10YR 3/1); slightly moist	
2									
3							SW	Well-graded SAND WITH CLAY AND GRAVEL: reddish brown (5YR 4/3); 40% gravel (up to 1-inch diameter)	
4							CL	SANDY LEAN CLAY WITH GRAVEL: brown (10YR 4/3)	
5									
6								Color changes to very dark gray (10YR 3/1)	
7								Total depth of boring = 7 feet	
8									
9									
10									
11									
12									
13									
14									
15									
16									
17									
18									
19									
20									
21									
22									
23									
24									
25									
26									
27									
28									
29									
30									
31									
32									
33									
34									
35									

Tetra Tech EM Inc.

Log of Boring: GMP11

Logged By: REBECCA LESHER
Logging Consultant: TETRA TECH
Drilling Company: GREGG

Project: GMP WELLS
Project No: DO 003
Location: PARCEL E LANDFILL
Ground Surface Elevation (feet MSL): 14.94
Top of Casing Elevation (feet MSL): NA

Drilling Method: HSA
Boring Started: 04/15/02
Completed: 04/15/02
Boring Depth (feet bgs): 6.00
Boring Diameter (inches): 5.50
Casing Diameter (inches): 0.75

DEPTH (FEET)	DRIVE INTERVAL	RECOVERY (IN)	SAMPLE ID	OVM (PPM)	WATER LEVEL	GRAPHIC LOG	ASTM SOIL TYPE	DESCRIPTION	COMMENTS
								Ground Surface	
0							CL	LEAN CLAY WITH SAND: very dark grayish brown (10YR 3/2); moist; 10% sand;	NOTE: LITHOLOGY WAS LOGGED FROM SG24.
1								2-inch sand lens at 3.5 feet	
2									
3								Soil saturated at 4 feet	
4									
5								Refusal at 6 feet; concrete chunks in sampler shoe	
6								Total depth of boring = 6 feet	
7									
8									
9									
10									
11									
12									
13									
14									
15									
16									
17									
18									
19									
20									
21									
22									
23									
24									
25									
26									
27									
28									
29									
30									
31									
32									
33									
34									
35									

Tetra Tech EM Inc.

Log of Boring: GMP11A

Logged By: KATHY VENDENHEUVAL
Logging Consultant: TETRA TECH
Drilling Company: GREGG

Project: GMP WELLS
Project No: DO 003
Location: PARCEL E LANDFILL
Ground Surface Elevation (feet MSL): 16.30
Top of Casing Elevation (feet MSL): NA

Drilling Method: HSA
Boring Started: 11/25/02
Completed: 11/25/02
Boring Depth (feet bgs): 6.00
Boring Diameter (inches): 5.50
Casing Diameter (inches): 0.75

DEPTH (FEET)	DRIVE INTERVAL	RECOVERY (IN)	SAMPLE ID	OVM (PPM)	WATER LEVEL	GRAPHIC LOG	ASTM SOIL TYPE	DESCRIPTION	COMMENTS
								Ground Surface	
0							CL	LEAN CLAY WITH SAND: very dark grayish brown (10YR 3/2); moist; 10% sand	NOTE: GMP01A IS A REPLACEMENT FOR GMP11. LITHOLOGY IS FROM THE SG24 BORING.
1								2-inch sand lens at 3.5 feet	
2									
3								Soil saturated at 4 feet	
4									
5								Groundater not encountered; refusal at 6 feet; concrete chunks in sampler shoe	
6								Total depth of boring = 6 feet	
7									
8									
9									
10									
11									
12									
13									
14									
15									
16									
17									
18									
19									
20									
21									
22									
23									
24									
25									
26									
27									
28									
29									
30									
31									
32									
33									
34									
35									

Tetra Tech EM Inc.

Log of Boring: GMP12

Logged By: REBECCA LESHER
Logging Consultant: TETRA TECH
Drilling Company: GREGG

Project: GMP WELLS
Project No: DO 003
Location: PARCEL E LANDFILL
Ground Surface Elevation (feet MSL): 17.32
Top of Casing Elevation (feet MSL): NA

Drilling Method: HSA
Boring Started: 04/15/02
Completed: 04/15/02
Boring Depth (feet bgs): 13.50
Boring Diameter (inches): 5.50
Casing Diameter (inches): 0.75

DEPTH (FEET)	DRIVE INTERVAL	RECOVERY (IN)	SAMPLE ID	OVM (PPM)	WATER LEVEL	GRAPHIC LOG	ASTM SOIL TYPE	DESCRIPTION	COMMENTS
0								Ground Surface	
							CL	Well-graded SANDY CLAY: dark gray; slightly moist to moist; 30% sand	NOTE: LITHOLOGY WAS LOGGED FROM THE SG25 BORING.
1									
2									
3									
4									
5									
6									
7									
8									
9								Interbedded green and brown sand lenses from 8 to 12 feet	
10									
11									
12									
13					▽				
14								Total depth of boring = 13.5 feet	
15									
16									
17									
18									
19									
20									
21									
22									
23									
24									
25									
26									
27									
28									
29									
30									
31									
32									
33									
34									
35									

Tetra Tech EM Inc.

Log of Boring: GMP13

Logged By: REBECCA LESHER
Logging Consultant: TETRA TECH
Drilling Company: GREGG

Project: GMP WELLS
Project No: DO 003
Location: PARCEL E LANDFILL
Ground Surface Elevation (feet MSL): 22.60
Top of Casing Elevation (feet MSL): NA

Drilling Method: HSA
Boring Started: 05/31/02
Completed: 05/31/02
Boring Depth (feet bgs): 19.50
Boring Diameter (inches): 5.50
Casing Diameter (inches): 0.75

DEPTH (FEET)	DRIVE INTERVAL	RECOVERY (IN)	SAMPLE ID	OVM (PPM)	WATER LEVEL	GRAPHIC LOG	ASTM SOIL TYPE	DESCRIPTION	COMMENTS
0								Ground Surface	
							SP	Asphalt and road base (3 inches)	
1		9							
2		9						Fill: poorly graded sand with clay and gravel.	
3								CLAY AND GRAVEL: brown; moist; medium- to fine-grained sand; about 10% fine sand; with 60% medium gravel	
							SC		
4		9						CLAY AND GRAVEL: gravels are serpentine and chert in content	
5		9							
6							CL		
7		9						CLAYEY SAND: yellowish brown; moist; fine-grained sand; 30% clay	
8		18							
9									
10		18							
11		18							
12									
13		18						LEAN CLAY: yellowish brown; 10% sand and occasional gravel	
14		18							
15									
16		18					kf		
17		18						Serpentinite bedrock: slightly weathered, very hard	
18									
19		18							
20								Total depth of boring = 19.5 feet	
21									
22									
23									
24									
25									
26									
27									
28									
29									
30									
31									
32									
33									
34									
35									

Tetra Tech EM Inc.

Log of Boring: GMP14

Logged By: REBECCA LESHER
Logging Consultant: TETRA TECH
Drilling Company: GREGG

Project: GMP WELLS
Project No: DO 003
Location: PARCEL E LANDFILL
Ground Surface Elevation (feet MSL): 21.70
Top of Casing Elevation (feet MSL): NA

Drilling Method: HSA
Boring Started: 05/31/02
Completed: 05/31/02
Boring Depth (feet bgs): 10.50
Boring Diameter (inches): 5.50
Casing Diameter (inches): 0.75

DEPTH (FEET)	DRIVE INTERVAL	RECOVERY (IN)	SAMPLE ID	OVM (PPM)	WATER LEVEL	GRAPHIC LOG	ASTM SOIL TYPE	DESCRIPTION	COMMENTS
0								Ground Surface	
1		18					cl	3" asphalt and road base	
2		18						SANDY CLAY with gravel: dark brown, 30% fine sand, 5% gravels, 65% clay	
3							sc		
4		6						CLAYEY SAND with gravel: 30% lean clay/60% medium to firm sand; 60% gravels serpentine in content; slightly moist dark brown to black with grain from serpentine.	
5		9							
6									
7		0							
8		18							
9					▽				
10		0							
11								Total depth of boring = 10.5 feet	
12									
13									
14									
15									
16									
17									
18									
19									
20									
21									
22									
23									
24									
25									
26									
27									
28									
29									
30									
31									
32									
33									
34									
35									

Tetra Tech EM Inc.

Log of Boring: GMP15

Logged By: REBECCA LESHER
Logging Consultant: TETRA TECH EMI
Drilling Company: GREGG

Project: GMP WELLS
Project No: DO 003
Location: PARCEL E LANDFILL
Ground Surface Elevation (feet MSL): 19.90
Top of Casing Elevation (feet MSL): NA

Drilling Method: HSA
Boring Started: 05/31/02
Completed: 05/31/02
Boring Depth (feet bgs): 12.50
Boring Diameter (inches): 5.50
Casing Diameter (inches): 0.75

DEPTH (FEET)	DRIVE INTERVAL	RECOVERY (IN)	SAMPLE ID	OVM (PPM)	WATER LEVEL	GRAPHIC LOG	ASTM SOIL TYPE	DESCRIPTION	COMMENTS
0								Ground Surface	
1							sp	0-3" Asphalt and road base	
2								Fill poorly graded sand with clay and gravel: 70% medium to fine grained sand; 20% clay; 10% gravel; dark brown	
3									
4									
5									
6		13							
7									
8							gp	Poor recovery due to gravel lens at 8-10': sub-rounded to sub-angular; gravel is medium to fine grained.	
9		4							
10							kf	Soil saturated	
11		13						Bedrock: serpentine and chert, very hard.	
12									
13								Total depth of boring = 12.5 feet	
14									
15									
16									
17									
18									
19									
20									
21									
22									
23									
24									
25									
26									
27									
28									
29									
30									
31									
32									
33									
34									
35									

Tetra Tech EM Inc.

Log of Boring: GMP16

Logged By: REBECCA LESHER
Logging Consultant: TETRA TECH EMI
Drilling Company: GREGG

Project: GMP WELLS
Project No: DO 003
Location: PARCEL E LANDFILL
Ground Surface Elevation (feet MSL): 17.50
Top of Casing Elevation (feet MSL): NA

Drilling Method: HSA
Boring Started: 05/31/02
Completed: 05/31/02
Boring Depth (feet bgs): 10.50
Boring Diameter (inches): 5.50
Casing Diameter (inches): 0.75

DEPTH (FEET)	DRIVE INTERVAL	RECOVERY (IN)	SAMPLE ID	OVM (PPM)	WATER LEVEL	GRAPHIC LOG	ASTM SOIL TYPE	DESCRIPTION	COMMENTS
0								Ground Surface	
1							cl	0-3" Asphalt and road base	
2								SANDY CLAY: dark brown, 20% fine sand; 80% clay; slightly moist.	
3									
4									
5									
6		18							
7									
8							kf	BEDROCK: serpenite and greenstone.	
9		18							
10									
11								Total depth of boring = 10.5 feet	
12									
13									
14									
15									
16									
17									
18									
19									
20									
21									
22									
23									
24									
25									
26									
27									
28									
29									
30									
31									
32									
33									
34									
35									

Tetra Tech EM Inc.

Log of Boring: GMP17

Logged By: REBECCA LESHER
Logging Consultant: TETRA TECH EMI
Drilling Company: GREGG

Project: GMP WELLS
Project No: DO 003
Location: PARCEL E LANDFILL
Ground Surface Elevation (feet MSL): 16.50
Top of Casing Elevation (feet MSL): NA

Drilling Method: HSA
Boring Started: 05/31/02
Completed: 05/31/02
Boring Depth (feet bgs): 10.50
Boring Diameter (inches): 5.50
Casing Diameter (inches): 0.75

DEPTH (FEET)	DRIVE INTERVAL	RECOVERY (IN)	SAMPLE ID	OVM (PPM)	WATER LEVEL	GRAPHIC LOG	ASTM SOIL TYPE	DESCRIPTION	COMMENTS
0								Ground Surface	
1							sc	3" Asphalt and road base	
2								CLAYEY SAND: brown; 70% medium to fine sand; 30% lean clay; moist	
3									
4							kf	SERPENTINE BEDROCK: serpenite and greenstone; slightly moist	
5									
6		16						Iron Oxide staining in bedrock at 8'	
7									
8		18							
9		18						Increasing moisture at 9'	
10									
11								Total depth of boring = 10.5 feet	
12									
13									
14									
15									
16									
17									
18									
19									
20									
21									
22									
23									
24									
25									
26									
27									
28									
29									
30									
31									
32									
33									
34									
35									

Tetra Tech EM Inc.

Log of Boring: GMP18

Logged By: REBECCA LESHER
Logging Consultant: TETRA TECH EMI
Drilling Company: GREGG

Project: GMP WELLS
Project No: DO 003
Location: PARCEL E LANDFILL
Ground Surface Elevation (feet MSL): 15.10
Top of Casing Elevation (feet MSL): NA

Drilling Method: HSA
Boring Started: 05/31/02
Completed: 05/31/02
Boring Depth (feet bgs): 13.00
Boring Diameter (inches): 5.50
Casing Diameter (inches): 0.75

DEPTH (FEET)	DRIVE INTERVAL	RECOVERY (IN)	SAMPLE ID	OVM (PPM)	WATER LEVEL	GRAPHIC LOG	ASTM SOIL TYPE	DESCRIPTION	COMMENTS
0								Ground Surface	
1							sc	3" Asphalt and road base	
2								Fill CLAYEY SAND: brown; 20% lean clay; 80% fine sand; occasional gravel; slightly moist.	
3								CLAYEY SAND: brown; 20% lean clay; 70% medium sand and fine grained sand; slightly moist	
4									
5							gp	POORLY GRADED GRAVEL: medium and fine gravels; some angular to sub-rounded; slightly moist	
6		24							
7									
8									
9									
10									
11		18							
12		18						Possible bedrock at 13'	
13								Total depth of boring = 13 feet	
14									
15									
16									
17									
18									
19									
20									
21									
22									
23									
24									
25									
26									
27									
28									
29									
30									
31									
32									
33									
34									
35									

Tetra Tech EM Inc.

Log of Boring: GMP19

Logged By: REBECCA LESHER
Logging Consultant: TETRA TECH EMI
Drilling Company: GREGG

Project: GMP WELLS
Project No: DO 003
Location: PARCEL E LANDFILL
Ground Surface Elevation (feet MSL): 13.80
Top of Casing Elevation (feet MSL): NA

Drilling Method: HSA
Boring Started: 05/31/02
Completed: 05/31/02
Boring Depth (feet bgs): 5.50
Boring Diameter (inches): 5.50
Casing Diameter (inches): 0.75

DEPTH (FEET)	DRIVE INTERVAL	RECOVERY (IN)	SAMPLE ID	OVM (PPM)	WATER LEVEL	GRAPHIC LOG	ASTM SOIL TYPE	DESCRIPTION	COMMENTS
0								Ground Surface	NOTE: BORING WAS LOGGED FROM CUTTINGS.
							sc	3" Asphalt and road base	
1									
2								CLAYEY SAND WITH GRAVEL: 20% clay; 5 to 10% gravel; medium to fine grained sand	
3									
4								Hit something hard at 5.5'	
5									
6								Total depth of boring = 5.5 feet	
7									
8									
9									
10									
11									
12									
13									
14									
15									
16									
17									
18									
19									
20									
21									
22									
23									
24									
25									
26									
27									
28									
29									
30									
31									
32									
33									
34									
35									

Tetra Tech EM Inc.

Log of Boring: GMP20

Logged By: REBECCA LESHER
Logging Consultant: TETRA TECH EMI
Drilling Company: GREGG

Project: GMP WELLS
Project No: DO 003
Location: PARCEL E LANDFILL
Ground Surface Elevation (feet MSL): 9.60
Top of Casing Elevation (feet MSL): NA

Drilling Method: HSA
Boring Started: 06/07/02
Completed: 06/07/02
Boring Depth (feet bgs): 7.00
Boring Diameter (inches): 5.50
Casing Diameter (inches): 0.75

DEPTH (FEET)	DRIVE INTERVAL	RECOVERY (IN)	SAMPLE ID	OVM (PPM)	WATER LEVEL	GRAPHIC LOG	ASTM SOIL TYPE	DESCRIPTION	COMMENTS
0								Ground Surface	
1		24					cl	SANDY CLAY: (10YR 4/4) dark yellowish brown; lean; approximately 30% fine sand; slightly moist	
2									
3		18						At 3' small glass fragment and few wood chips (less than 1 inch)	
4		18						At 4' color change to (10YR 3/2): very dark grayish brown; sand content increases to approximately 40%; increasing moisture at 5'	
5									
6		12							
7								Total depth of boring = 7 feet	
8									
9									
10									
11									
12									
13									
14									
15									
16									
17									
18									
19									
20									
21									
22									
23									
24									
25									
26									
27									
28									
29									
30									
31									
32									
33									
34									
35									

Tetra Tech EM Inc.

Log of Boring: GMP21

Logged By: REBECCA LESHER
Logging Consultant: TETRA TECH EMI
Drilling Company: GREGG

Project: GMP WELLS
Project No: DO 003
Location: PARCEL E LANDFILL
Ground Surface Elevation (feet MSL): 10.30
Top of Casing Elevation (feet MSL): NA

Drilling Method: HSA
Boring Started: 06/07/02
Completed: 06/07/02
Boring Depth (feet bgs): 7.00
Boring Diameter (inches): 5.50
Casing Diameter (inches): 0.75

DEPTH (FEET)	DRIVE INTERVAL	RECOVERY (IN)	SAMPLE ID	OVM (PPM)	WATER LEVEL	GRAPHIC LOG	ASTM SOIL TYPE	DESCRIPTION	COMMENTS
0								Ground Surface	
1		12					sc	Grass/trash at surface	
2							cl	CLAYEY SAND: (10YR 4/3) brown poorly graded fine and medium grained sand; approximately 30% lean clay, slightly moist.	
3		18						LEAN CLAY WITH SAND: (10YR 4/4) dark yellowish brown; approximately 10% fine sand; slightly moist.	
4		12							
5								At 5' small root (0.25 inch in diameter)	
6		24							
7								At 6.5' color change to (7.5YR 3/2) dark brown.	
8								Total depth of boring = 7 feet	
9									
10									
11									
12									
13									
14									
15									
16									
17									
18									
19									
20									
21									
22									
23									
24									
25									
26									
27									
28									
29									
30									
31									
32									
33									
34									
35									

Tetra Tech EM Inc.

Log of Boring: GMP22

Logged By: REBECCA LESHER
Logging Consultant: TETRA TECH EMI
Drilling Company: GREGG

Project: GMP WELLS
Project No: DO 003
Location: PARCEL E LANDFILL
Ground Surface Elevation (feet MSL): 19.20
Top of Casing Elevation (feet MSL): NA

Drilling Method: HSA
Boring Started: 09/11/02
Completed: 09/11/02
Boring Depth (feet bgs): 14.00
Boring Diameter (inches): 5.50
Casing Diameter (inches): 0.75

DEPTH (FEET)	DRIVE INTERVAL	RECOVERY (IN)	SAMPLE ID	OVM (PPM)	WATER LEVEL	GRAPHIC LOG	ASTM SOIL TYPE	DESCRIPTION	COMMENTS
0								Ground Surface	
1							sc	Approximately 2" of gravel at surface	
2								CLAYEY SAND: (7.5YR 4/4) brown; 60% fine sand; 20% medium sand; 20% clay; very slightly moist	
5–6		6							
10–11		6						Slight petroleum odor at 12'	
12–13		6						Saturated at 14'	
14								Total depth of boring = 14 feet	

Tetra Tech EM Inc.

Log of Boring: GMP23

Logged By: REBECCA LESHER
Logging Consultant: TETRA TECH EMI
Drilling Company: GREGG

Project: GMP WELLS
Project No: DO 003
Location: PARCEL E LANDFILL
Ground Surface Elevation (feet MSL): 19.40
Top of Casing Elevation (feet MSL): NA

Drilling Method: HSA
Boring Started: 09/11/02
Completed: 09/11/02
Boring Depth (feet bgs): 14.00
Boring Diameter (inches): 5.50
Casing Diameter (inches): 0.75

DEPTH (FEET)	DRIVE INTERVAL	RECOVERY (IN)	SAMPLE ID	OVM (PPM)	WATER LEVEL	GRAPHIC LOG	ASTM SOIL TYPE	DESCRIPTION	COMMENTS
0								Ground Surface	
1							sw	Gravel and asphalt	
2								SAND WITH CLAY: (10YR 3/2) very dark greyish brown; sand is well graded; 30% coarse grained; 40% medium grained; 20% fine grained; 10% lean clay.	
3									
4									
5							sc		
6		9						CLAYEY SAND: (10YR 6/3) pale brown; 30% clay; 10% coarse grained; 40% medium grained; 20% fine grained; slightly moist; no odor or staining	
7									
8									
9									
10									
11		18						Black staining and petroleum odor at 12'; moist	
12									
13		8						Very moist at 13.5'; 1-inch piece of glass	
14								Total depth of boring = 14 feet	
15									
16									
17									
18									
19									
20									
21									
22									
23									
24									
25									
26									
27									
28									
29									
30									
31									
32									
33									
34									
35									

Tetra Tech EM Inc.

Log of Boring: GMP24

Logged By: REBECCA LESHER
Logging Consultant: TETRA TECH EMI
Drilling Company: GREGG

Project: GMP WELLS
Project No: DO 003
Location: PARCEL E LANDFILL
Ground Surface Elevation (feet MSL): 16.80
Top of Casing Elevation (feet MSL): NA

Drilling Method: HSA
Boring Started: 09/11/02
Completed: 09/11/02
Boring Depth (feet bgs): 13.50
Boring Diameter (inches): 5.50
Casing Diameter (inches): 0.75

DEPTH (FEET)	DRIVE INTERVAL	RECOVERY (IN)	SAMPLE ID	OVM (PPM)	WATER LEVEL	GRAPHIC LOG	ASTM SOIL TYPE	DESCRIPTION	COMMENTS
0								Ground Surface	
1							cl	3 inch asphalt surface.	
2								SANDY CLAY: (7.5YR 4/4) brown; 30% fine to medium grained sand, 70% lean clay; slightly moist.	
3									
4									
5									
6		9							
7									
8									
9									
10							sc	CLAYEY SAND: (2.5Y 3/2) very dark greyish brown ; 30% coarse sand, 40% medium to fine grained sand, 30% lean clay; slightly moist; saturated at 13'	
11		24							
12									
13		9							
14								Total depth of boring = 13.5 feet	
15									
16									
17									
18									
19									
20									
21									
22									
23									
24									
25									
26									
27									
28									
29									
30									
31									
32									
33									
34									
35									

Tetra Tech EM Inc.

Log of Boring: GMP25

Logged By: REBECCA LESHER
Logging Consultant: TETRA TECH EMI
Drilling Company: GREGG

Project: GMP WELLS
Project No: DO 003
Location: PARCEL E LANDFILL
Ground Surface Elevation (feet MSL): 15.50
Top of Casing Elevation (feet MSL): NA

Drilling Method: HSA
Boring Started: 09/11/02
Completed: 09/11/02
Boring Depth (feet bgs): 12.00
Boring Diameter (inches): 5.50
Casing Diameter (inches): 0.75

DEPTH (FEET)	DRIVE INTERVAL	RECOVERY (IN)	SAMPLE ID	OVM (PPM)	WATER LEVEL	GRAPHIC LOG	ASTM SOIL TYPE	DESCRIPTION	COMMENTS
0								Ground Surface	
1							gw	3" Asphalt cover	
2								GRAVEL: well graded with serpentine rocks; minor iron oxide staining; no odor, slightly moist.	
3									
4									
5									
6		5							
7									
8									
9									
10							cl	CLAY: (5G 5/1) greenish grey; 90% lean clay, 10% fine sand; saturated at 11'	
11		24			▽				
12								Total depth of boring = 12 feet	
13									
14									
15									
16									
17									
18									
19									
20									
21									
22									
23									
24									
25									
26									
27									
28									
29									
30									
31									
32									
33									
34									
35									

Tetra Tech EM Inc.

Log of Boring: GMP26

Logged By: REBECCA LESHER
Logging Consultant: TETRA TECH EMI
Drilling Company: GREGG

Project: GMP WELLS
Project No: DO 003
Location: PARCEL E LANDFILL
Ground Surface Elevation (feet MSL): 15.40
Top of Casing Elevation (feet MSL): NA

Drilling Method: HSA
Boring Started: 09/11/02
Completed: 09/11/02
Boring Depth (feet bgs): 12.00
Boring Diameter (inches): 5.50
Casing Diameter (inches): 0.75

DEPTH (FEET)	DRIVE INTERVAL	RECOVERY (IN)	SAMPLE ID	OVM (PPM)	WATER LEVEL	GRAPHIC LOG	ASTM SOIL TYPE	DESCRIPTION	COMMENTS
0								Ground Surface	
							cl	3 inch asphalt at surface	
1								SANDY CLAY: (5g 4/1) dark greenish grey; 30% medium to fine grained sand, 5% coarse sand.	
2									
3									
4									
5								At 5' slightly moist.	
6		9							
7								At 10' occasional gravel, serpentinite in content.	
8									
9									
10									
11		7						Saturated at 12.'	
12								Total depth of boring = 12 feet	
13									
14									
15									
16									
17									
18									
19									
20									
21									
22									
23									
24									
25									
26									
27									
28									
29									
30									
31									
32									
33									
34									
35									

APPENDIX B
GAS MONITORING PROBE CONSTRUCTION LOGS

LIST OF GAS MONITORING PROBE CONSTRUCTION LOGS

GMP01	GMP10
GMP01A	GMP11
GMP02	GMP11A
GMP02A	GMP12
GMP03	GMP13
GMP03A	GMP14
GMP04	GMP15
GMP04A	GMP16
GMP05	GMP17
GMP05A	GMP18
GMP05B	GMP19
GMP06	GMP20
GMP06A	GMP21
GMP06B	GMP22
GMP07	GMP23
GMP07A	GMP24
GMP08	GMP25
GMP08A	GMP26
GMP09	

TETRATECH EM INC

GAS MONITORING PROBE COMPLETION RECORD

DRILLING INFORMATION

DRILLING BEGAN:
DATE 04-15-02 TIME
WELL INSTALLATION BEGAN:
DATE 04-15-02 TIME 10:30
WELL COMPLETION FINISHED:
DATE 04-15-02 TIME
DRILLING CO. GREGG Drilling
DRILLER
LICENSE
DRILL RIG
DRILLING METHOD:
☒ HOLLOW STEM AUGER
❑ AIR ROTARY
❑
DIAMETER OF AUGERS:
ID OD 5.5 inches

BENTONITE SEAL

AMOUNT CALCULATED
AMOUNT USED 25 pounds
❑ PELLETS, SIZE
☒ CHIPS, SIZE medium
❑
PRODUCT
MFG. BY
METHOD INSTALLED:
☒ POURED ❑ TREMIE
AMOUNT OF WATER USED 5 gallons

FILTER PACK

AMOUNT CALCULATED Not applicable
AMOUNT USED 200 pounds
❑ SAND, SIZE #2/16
❑ FORMATION COLLAPSE:
FROM 5.0 ft bgs TO 14.0 ft bgs
PRODUCT
MFG. BY
METHOD INSTALLED:
☒ POURED ❑ TREMIE

SURFACE COMPLETION

❑ FLUSH MOUNT
☒ ABOVE GROUND W/BUMPER POST
❑ CONCRETE ❑ ASPHALT

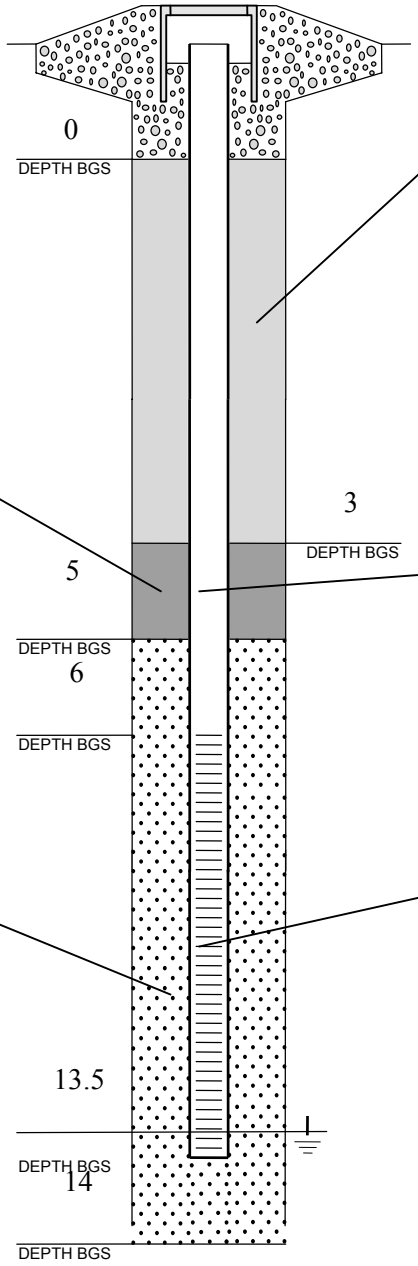

MONITORING WELL

MONITORING WELL NO. GMP01
PROJECT Parcel E Nonstd Data Gaps Inv
SITE IR-01/21
BOREHOLE NO.
WELL PERMIT NO. Not Applicable
TOC TO BOTTOM OF WELL

ANNULAR SEAL

AMOUNT CALCULATED
AMOUNT USED 160 pounds
☒ GROUT FORMULA
PORTLAND CEMENT 95%
BENTONITE 5%
WATER 12 gallons
❑ PREPARED MIX
PRODUCT
MFG. BY
METHOD INSTALLED:
☒ POURED ❑ TREMIE

CASING

☒ SCHEDULE 40 PVC
❑
PRODUCT
MFG. BY
CASING DIAMETER:
ID 0.75 inches OD
LENGTH OF CASING 14.0 ft bgs

WELL SCREEN

☒ SCHEDULE 40 PVC
❑
PRODUCT
MFG. BY
CASING DIAMETER:
ID 0.75 inches OD
SLOT SIZE 0.010
LENGTH OF SCREEN 7.5 ft

TETRATECH EM INC

GAS MONITORING PROBE COMPLETION RECORD

DRILLING INFORMATION

DRILLING BEGAN:
DATE 09-12-02 TIME 13:50
WELL INSTALLATION BEGAN:
DATE 09-12-02 TIME
WELL COMPLETION FINISHED:
DATE 09-12-02 TIME
DRILLING CO. GREGG Drilling
DRILLER
LICENSE
DRILL RIG
DRILLING METHOD:
☒ HOLLOW STEM AUGER
❑ AIR ROTARY
❑
DIAMETER OF AUGERS:
ID OD 5.5 inches

BENTONITE SEAL

AMOUNT CALCULATED
AMOUNT USED 50 lbs.
❑ PELLETS, SIZE
☒ CHIPS, SIZE medium
❑
PRODUCT
MFG. BY
METHOD INSTALLED:
☒ POURED ❑ TREMIE
AMOUNT OF WATER USED

FILTER PACK

AMOUNT CALCULATED
AMOUNT USED 200 pounds
❑ SAND, SIZE #2/16
❑ FORMATION COLLAPSE:
FROM 5.0 ft bgs TO 14.0 ft bgs
PRODUCT
MFG. BY
METHOD INSTALLED:
☒ POURED ❑ TREMIE

SURFACE COMPLETION

❑FLUSH MOUNT
☒ABOVE GROUND W/BUMPER POST
❑CONCRETE ❑ ASPHALT

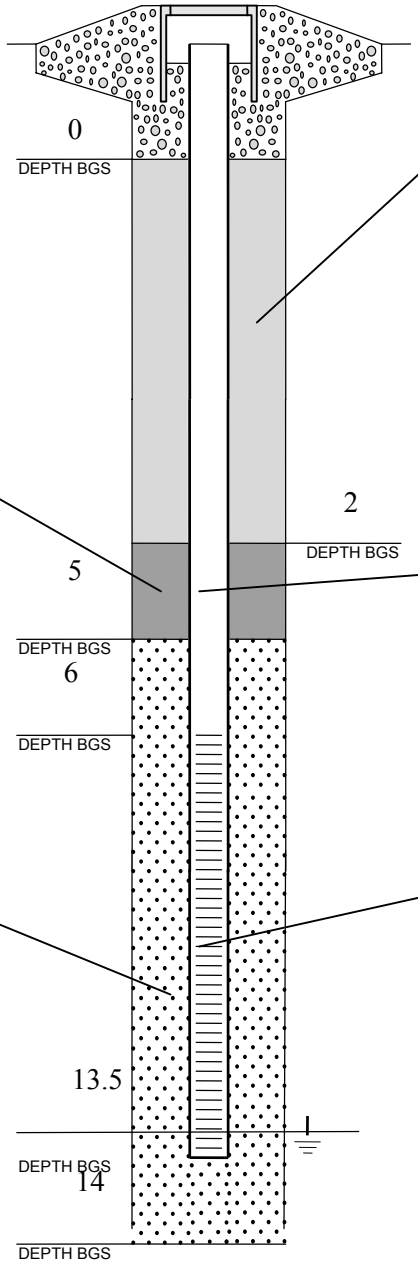

MONITORING WELL

MONITORING WELL NO. GMP01A
PROJECT Parcel E Nonstd Data Gaps Inv
SITE IR-01/21
BOREHOLE NO.
WELL PERMIT NO. Not Applicable
TOC TO BOTTOM OF WELL

ANNULAR SEAL

AMOUNT CALCULATED
AMOUNT USED
☒ GROUT FORMULA
PORTLAND CEMENT 95%
BENTONITE 5%
WATER
❑ PREPARED MIX
PRODUCT
MFG. BY
METHOD INSTALLED:
☒ POURED ❑ TREMIE

CASING

☒ SCHEDULE 40 PVC
❑
PRODUCT
MFG. BY
CASING DIAMETER:
ID 0.75 inches OD
LENGTH OF CASING 14.0 ft bgs

WELL SCREEN

☒ SCHEDULE 40 PVC
❑
PRODUCT
MFG. BY
CASING DIAMETER:
ID 0.75 inches OD
SLOT SIZE 0.010
LENGTH OF SCREEN 7.5 ft

TETRATECH EM INC

GAS MONITORING PROBE COMPLETION RECORD

DRILLING INFORMATION

DRILLING BEGAN:
DATE 04-15-02 TIME
WELL INSTALLATION BEGAN:
DATE 04-15-02 TIME 11:25
WELL COMPLETION FINISHED:
DATE 04-15-02 TIME
DRILLING CO. GREGG Drilling
DRILLER
LICENSE
DRILL RIG
DRILLING METHOD:
☒ HOLLOW STEM AUGER
❑ AIR ROTARY
❑
DIAMETER OF AUGERS:
ID OD 5.5 inches

BENTONITE SEAL

AMOUNT CALCULATED
AMOUNT USED 25 pounds
❑ PELLETS, SIZE
☒ CHIPS, SIZE medium
❑
PRODUCT
MFG. BY
METHOD INSTALLED:
☒ POURED ❑ TREMIE
AMOUNT OF WATER USED 5 gallons

FILTER PACK

AMOUNT CALCULATED
AMOUNT USED 200 pounds
❑ SAND, SIZE #2/16
❑ FORMATION COLLAPSE:
FROM 5.0 ft bgs TO 14.0 ft bgs
PRODUCT
MFG. BY
METHOD INSTALLED:
☒ POURED ❑ TREMIE

SURFACE COMPLETION

❑ FLUSH MOUNT
☒ ABOVE GROUND W/BUMPER POST
❑ CONCRETE ❑ ASPHALT

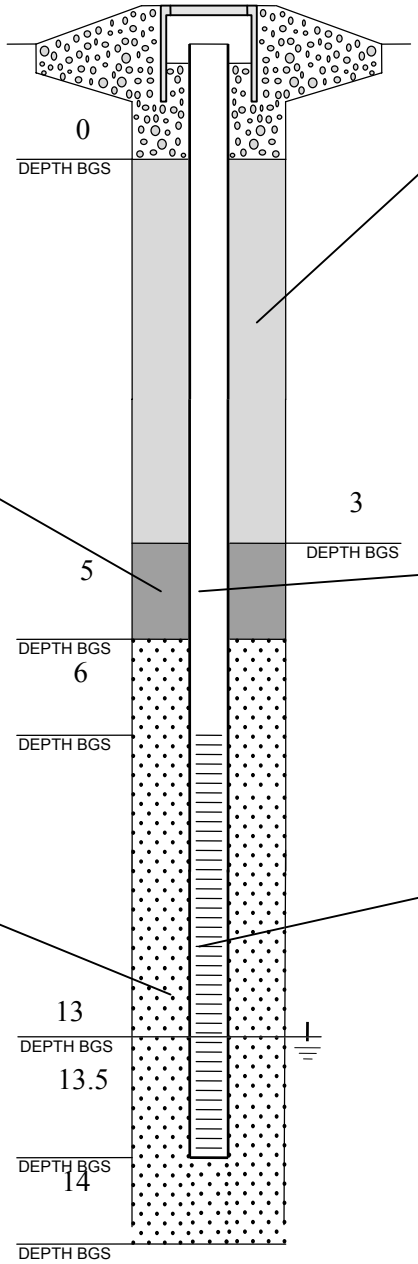

MONITORING WELL

MONITORING WELL NO. GMP02
PROJECT Parcel E Nonstd Data Gaps Inv
SITE IR-01/21
BOREHOLE NO.
WELL PERMIT NO. Not Applicable
TOC TO BOTTOM OF WELL

ANNULAR SEAL

AMOUNT CALCULATED
AMOUNT USED 160 pounds
☒ GROUT FORMULA
PORTLAND CEMENT 95%
BENTONITE 5%
WATER 12 gallons
❑ PREPARED MIX
PRODUCT
MFG. BY
METHOD INSTALLED:
☒ POURED ❑ TREMIE

CASING

☒ SCHEDULE 40 PVC
❑
PRODUCT
MFG. BY
CASING DIAMETER:
ID 0.75 inches OD
LENGTH OF CASING 14.0 ft bgs

WELL SCREEN

☒ SCHEDULE 40 PVC
❑
PRODUCT
MFG. BY
CASING DIAMETER:
ID 0.75 inches OD
SLOT SIZE 0.010
LENGTH OF SCREEN 7.5 ft

TETRATECH EM INC

GAS MONITORING PROBE COMPLETION RECORD

DRILLING INFORMATION

DRILLING BEGAN:
DATE 09-12-02 TIME 15:20
WELL INSTALLATION BEGAN:
DATE 09-12-02 TIME
WELL COMPLETION FINISHED:
DATE 09-12-02 TIME
DRILLING CO. GREGG Drilling
DRILLER
LICENSE
DRILL RIG
DRILLING METHOD:
☒ HOLLOW STEM AUGER
❑ AIR ROTARY
❑
DIAMETER OF AUGERS:
ID OD 5.5 inches

BENTONITE SEAL

AMOUNT CALCULATED
AMOUNT USED 50 lbs.
❑ PELLETS, SIZE
☒ CHIPS, SIZE medium
❑
PRODUCT
MFG. BY
METHOD INSTALLED:
☒ POURED ❑ TREMIE
AMOUNT OF WATER USED 5 gallons

FILTER PACK

AMOUNT CALCULATED
AMOUNT USED 200 pounds
❑ SAND, SIZE #2/16
❑ FORMATION COLLAPSE:
FROM 5.0 ft bgs TO 14.0 ft bgs
PRODUCT
MFG. BY
METHOD INSTALLED:
☒ POURED ❑ TREMIE

SURFACE COMPLETION

☐FLUSH MOUNT
☒ABOVE GROUND W/BUMPER POST
☐CONCRETE ❑ ASPHALT

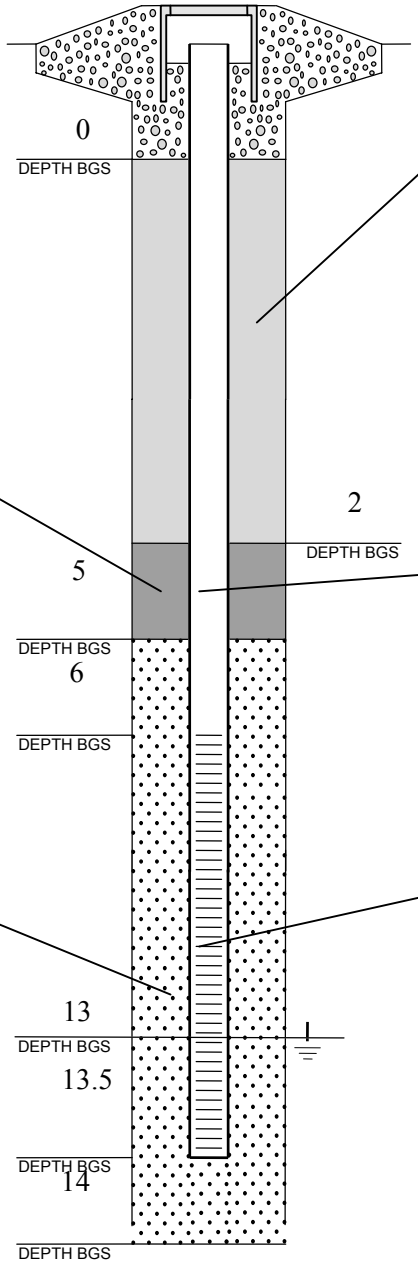

MONITORING WELL

MONITORING WELL NO. GMP02A
PROJECT Parcel E Nonstd Data Gaps Inv
SITE IR-01/21
BOREHOLE NO.
WELL PERMIT NO. Not Applicable
TOC TO BOTTOM OF WELL

ANNULAR SEAL

AMOUNT CALCULATED
AMOUNT USED
☒ GROUT FORMULA
PORTLAND CEMENT 95%
BENTONITE 5%
WATER
❑ PREPARED MIX
PRODUCT
MFG. BY
METHOD INSTALLED:
☒ POURED ❑ TREMIE

CASING

☒ SCHEDULE 40 PVC
❑
PRODUCT
MFG. BY
CASING DIAMETER:
ID 0.75 inches OD
LENGTH OF CASING 14.0 ft bgs

WELL SCREEN

☒ SCHEDULE 40 PVC
❑
PRODUCT
MFG. BY
CASING DIAMETER:
ID 0.75 inches OD
SLOT SIZE 0.010
LENGTH OF SCREEN 7.5 ft

TETRATECH EM INC

GAS MONITORING PROBE COMPLETION RECORD

DRILLING INFORMATION

DRILLING BEGAN:
DATE 04-15-02 TIME
WELL INSTALLATION BEGAN:
DATE 04-15-02 TIME
WELL COMPLETION FINISHED:
DATE 04-15-02 TIME
DRILLING CO. GREGG Drilling
DRILLER
LICENSE
DRILL RIG
DRILLING METHOD:
☒ HOLLOW STEM AUGER
❑ AIR ROTARY
❑
DIAMETER OF AUGERS:
ID OD 5.5 inches

BENTONITE SEAL

AMOUNT CALCULATED
AMOUNT USED 25 pounds
❑ PELLETS, SIZE
☒ CHIPS, SIZE medium
❑
PRODUCT
MFG. BY
METHOD INSTALLED:
☒ POURED ❑ TREMIE
AMOUNT OF WATER USED 5 gallons

FILTER PACK

AMOUNT CALCULATED
AMOUNT USED 200 pounds
❑ SAND, SIZE #2/16
❑ FORMATION COLLAPSE:
FROM 5.0 ft bgs TO 14.0 ft bgs
PRODUCT
MFG. BY
METHOD INSTALLED:
☒ POURED ❑ TREMIE

SURFACE COMPLETION

❑ FLUSH MOUNT
☒ ABOVE GROUND W/BUMPER POST
❑ CONCRETE ❑ ASPHALT

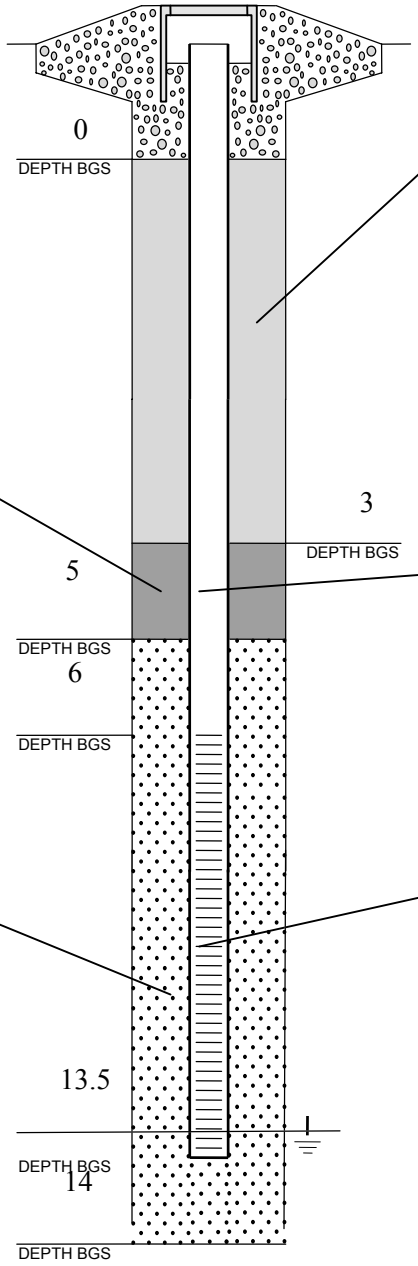

MONITORING WELL

MONITORING WELL NO. GMP03
PROJECT Parcel E Nonstd Data Gaps Inv
SITE IR-01/21
BOREHOLE NO.
WELL PERMIT NO. Not Applicable
TOC TO BOTTOM OF WELL

ANNULAR SEAL

AMOUNT CALCULATED
AMOUNT USED 160 pounds
☒ GROUT FORMULA
PORTLAND CEMENT 95%
BENTONITE 5%
WATER 12 gallons
❑ PREPARED MIX
PRODUCT
MFG. BY
METHOD INSTALLED:
☒ POURED ❑ TREMIE

CASING

☒ SCHEDULE 40 PVC
❑
PRODUCT
MFG. BY
CASING DIAMETER:
ID 0.75 inches OD
LENGTH OF CASING 14.0 ft bgs

WELL SCREEN

☒ SCHEDULE 40 PVC
❑
PRODUCT
MFG. BY
CASING DIAMETER:
ID 0.75 inches OD
SLOT SIZE 0.010
LENGTH OF SCREEN 7.5 ft

TETRATECH EM INC

GAS MONITORING PROBE COMPLETION RECORD

DRILLING INFORMATION

DRILLING BEGAN:
DATE 09-12-02 TIME
WELL INSTALLATION BEGAN:
DATE 09-12-02 TIME
WELL COMPLETION FINISHED:
DATE 09-12-02 TIME
DRILLING CO. GREGG Drilling
DRILLER
LICENSE
DRILL RIG
DRILLING METHOD:
☒ HOLLOW STEM AUGER
❑ AIR ROTARY
❑
DIAMETER OF AUGERS:
ID OD 5.5 inches

BENTONITE SEAL

AMOUNT CALCULATED
AMOUNT USED 25 pounds
❑ PELLETS, SIZE
☒ CHIPS, SIZE medium
❑
PRODUCT
MFG. BY
METHOD INSTALLED:
☒ POURED ❑ TREMIE
AMOUNT OF WATER USED 5 gallons

FILTER PACK

AMOUNT CALCULATED
AMOUNT USED 200 pounds
❑ SAND, SIZE #2/16
❑ FORMATION COLLAPSE:
FROM 5.0 ft bgs TO 14.0 ft bgs
PRODUCT
MFG. BY
METHOD INSTALLED:
☒ POURED ❑ TREMIE

SURFACE COMPLETION

❑ FLUSH MOUNT
☒ ABOVE GROUND W/BUMPER POST
❑ CONCRETE ❑ ASPHALT

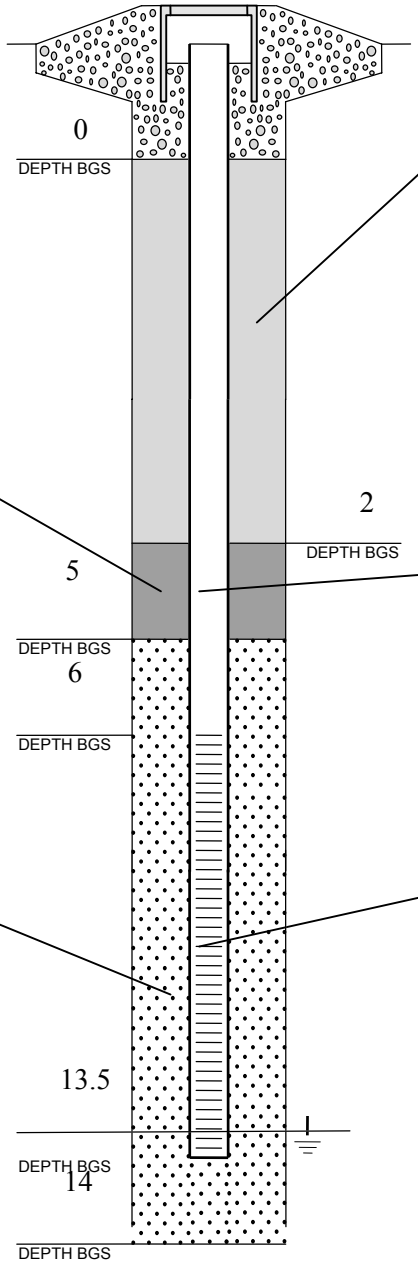

MONITORING WELL

MONITORING WELL NO. GMP03A
PROJECT Parcel E Nonstd Data Gaps Inv
SITE IR-01/21
BOREHOLE NO.
WELL PERMIT NO. Not Applicable
TOC TO BOTTOM OF WELL

ANNULAR SEAL

AMOUNT CALCULATED
AMOUNT USED
☒ GROUT FORMULA
PORTLAND CEMENT 95%
BENTONITE 5%
WATER
❑ PREPARED MIX
PRODUCT
MFG. BY
METHOD INSTALLED:
☒ POURED ❑ TREMIE

CASING

☒ SCHEDULE 40 PVC
❑
PRODUCT
MFG. BY
CASING DIAMETER:
ID 0.75 inches OD
LENGTH OF CASING 14.0 ft bgs

WELL SCREEN

☒ SCHEDULE 40 PVC
❑
PRODUCT
MFG. BY
CASING DIAMETER:
ID 0.75 inches OD
SLOT SIZE 0.010
LENGTH OF SCREEN 7.5 ft

TETRATECH EM INC

GAS MONITORING PROBE COMPLETION RECORD

DRILLING INFORMATION

DRILLING BEGAN:
DATE 04-15-02 TIME
WELL INSTALLATION BEGAN:
DATE 04-15-02 TIME 13:45
WELL COMPLETION FINISHED:
DATE 04-15-02 TIME
DRILLING CO. GREGG Drilling
DRILLER
LICENSE
DRILL RIG
DRILLING METHOD:
☒ HOLLOW STEM AUGER
❑ AIR ROTARY
❑
DIAMETER OF AUGERS:
ID OD 5.5 inches

BENTONITE SEAL

AMOUNT CALCULATED
AMOUNT USED 25 pounds
❑ PELLETS, SIZE
☒ CHIPS, SIZE 0.375
❑
PRODUCT
MFG. BY
METHOD INSTALLED:
☒ POURED ❑ TREMIE
AMOUNT OF WATER USED 5 gallons

FILTER PACK

AMOUNT CALCULATED
AMOUNT USED 200 pounds
❑ SAND, SIZE #2/16
❑ FORMATION COLLAPSE:
FROM 5.0 ft bgs TO 14.0 ft bgs
PRODUCT
MFG. BY
METHOD INSTALLED:
☒ POURED ❑ TREMIE

SURFACE COMPLETION

❑ FLUSH MOUNT
☒ ABOVE GROUND W/BUMPER POST
❑ CONCRETE ❑ ASPHALT

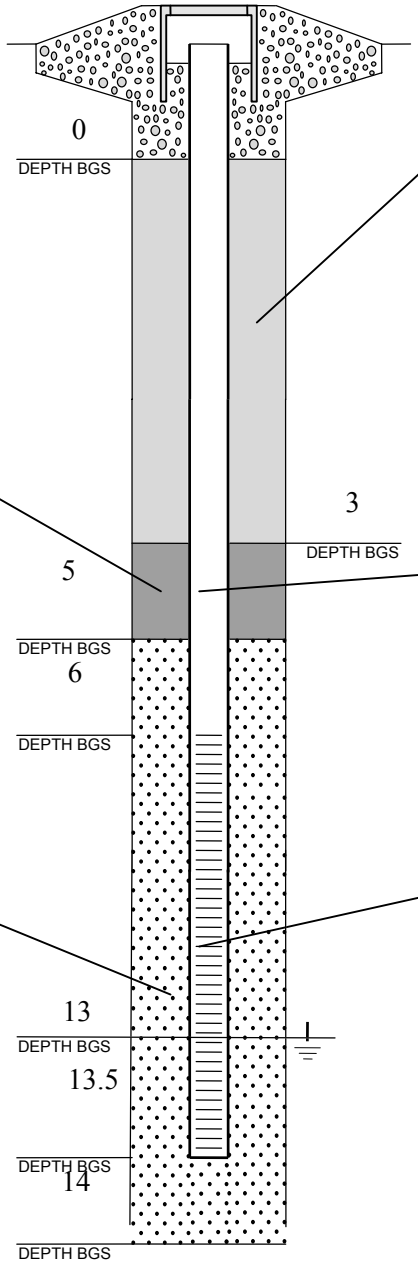

MONITORING WELL

MONITORING WELL NO. GMP04
PROJECT Parcel E Nonstd Data Gaps Inv
SITE IR-01/21
BOREHOLE NO.
WELL PERMIT NO.
TOC TO BOTTOM OF WELL

ANNULAR SEAL

AMOUNT CALCULATED
AMOUNT USED 160 pounds
☒ GROUT FORMULA
PORTLAND CEMENT 95%
BENTONITE 5%
WATER
❑ PREPARED MIX
PRODUCT
MFG. BY
METHOD INSTALLED:
☒ POURED ❑ TREMIE

CASING

☒ SCHEDULE 40 PVC
❑
PRODUCT
MFG. BY
CASING DIAMETER:
ID 0.75 inches OD
LENGTH OF CASING 14.0 ft bgs

WELL SCREEN

☒ SCHEDULE 40 PVC
❑
PRODUCT
MFG. BY
CASING DIAMETER:
ID 0.75 inches OD
SLOT SIZE 0.010
LENGTH OF SCREEN 7.5 ft

TETRATECH EM INC

GAS MONITORING PROBE COMPLETION RECORD

DRILLING INFORMATION

DRILLING BEGAN:
DATE 09-12-02 TIME 10:35
WELL INSTALLATION BEGAN:
DATE 09-12-02 TIME
WELL COMPLETION FINISHED:
DATE 09-12-02 TIME
DRILLING CO. GREGG Drilling
DRILLER
LICENSE
DRILL RIG
DRILLING METHOD:
☒ HOLLOW STEM AUGER
❑ AIR ROTARY
❑
DIAMETER OF AUGERS:
ID OD 5.5 inches

BENTONITE SEAL

AMOUNT CALCULATED
AMOUNT USED I
❑ PELLETS, SIZE
☒ CHIPS, SIZE medium
❑
PRODUCT
MFG. BY
METHOD INSTALLED:
☒ POURED ❑ TREMIE
AMOUNT OF WATER USED 5 gallons

FILTER PACK

AMOUNT CALCULATED
AMOUNT USED 200 pounds
❑ SAND, SIZE #2/16
❑ FORMATION COLLAPSE:
FROM 5.0 ft bgs TO 14.0 ft bgs
PRODUCT
MFG. BY
METHOD INSTALLED:
☒ POURED ❑ TREMIE

SURFACE COMPLETION

❑FLUSH MOUNT
☒ABOVE GROUND W/BUMPER POST
❑CONCRETE ❑ ASPHALT

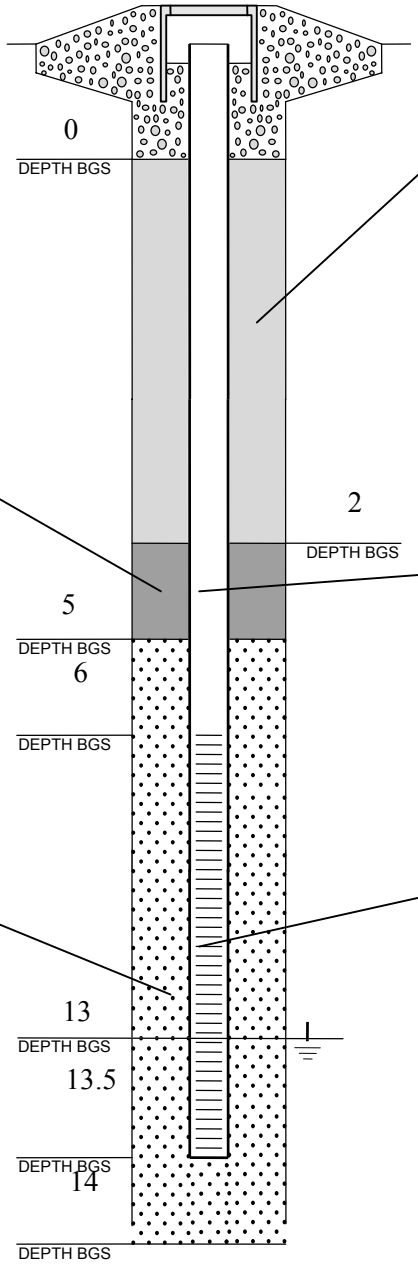

MONITORING WELL

MONITORING WELL NO. GMP04A
PROJECT Parcel E Nonstd Data Gaps Inv
SITE IR-01/21
BOREHOLE NO.
WELL PERMIT NO. Not Applicable
TOC TO BOTTOM OF WELL

ANNULAR SEAL

AMOUNT CALCULATED
AMOUNT USED
☒ GROUT FORMULA
PORTLAND CEMENT 95%
BENTONITE 5%
WATER
❑ PREPARED MIX
PRODUCT
MFG. BY
METHOD INSTALLED:
☒ POURED ❑ TREMIE

CASING

☒ SCHEDULE 40 PVC
❑
PRODUCT
MFG. BY
CASING DIAMETER:
ID 0.75 inches OD
LENGTH OF CASING 14.0 ft bgs

WELL SCREEN

☒ SCHEDULE 40 PVC
❑
PRODUCT
MFG. BY
CASING DIAMETER:
ID 0.75 inches OD
SLOT SIZE 0.010
LENGTH OF SCREEN 7.5 ft

TETRATECH EM INC

GAS MONITORING PROBE COMPLETION RECORD

DRILLING INFORMATION

DRILLING BEGAN:
DATE 04-15-02 TIME 14:25
WELL INSTALLATION BEGAN:
DATE 04-15-02 TIME
WELL COMPLETION FINISHED:
DATE 04-15-02 TIME
DRILLING CO. GREGG Drilling
DRILLER
LICENSE
DRILL RIG
DRILLING METHOD:
☒ HOLLOW STEM AUGER
❑ AIR ROTARY
❑
DIAMETER OF AUGERS:
ID OD 5.5 inches

BENTONITE SEAL

AMOUNT CALCULATED
AMOUNT USED 25 pounds
❑ PELLETS, SIZE
☒ CHIPS, SIZE medium
❑
PRODUCT
MFG. BY
METHOD INSTALLED:
☒ POURED ❑ TREMIE
AMOUNT OF WATER USED 5 gallons

FILTER PACK

AMOUNT CALCULATED
AMOUNT USED 250 pounds
❑ SAND, SIZE #2/16
❑ FORMATION COLLAPSE:
FROM 5.0 ft bgs TO 14.0 ft bgs
PRODUCT
MFG. BY
METHOD INSTALLED:
☒ POURED ❑ TREMIE

SURFACE COMPLETION

❑ FLUSH MOUNT
☒ ABOVE GROUND W/BUMPER POST
❑ CONCRETE ❑ ASPHALT

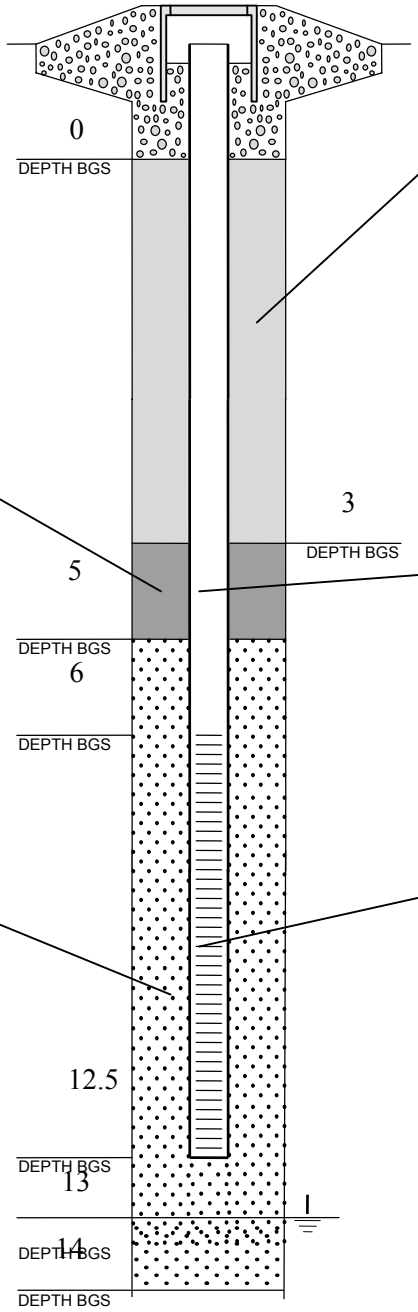

MONITORING WELL

MONITORING WELL NO. GMP05
PROJECT Parcel E Nonstd Data Gaps Inv
SITE IR-01/21
BOREHOLE NO.
WELL PERMIT NO. Not Applicable
TOC TO BOTTOM OF WELL

ANNULAR SEAL

AMOUNT CALCULATED
AMOUNT USED 160 pounds
☒ GROUT FORMULA
PORTLAND CEMENT 95%
BENTONITE 5%
WATER 12 gallons
❑ PREPARED MIX
PRODUCT
MFG. BY
METHOD INSTALLED:
☒ POURED ❑ TREMIE

CASING

☒ SCHEDULE 40 PVC
❑
PRODUCT
MFG. BY
CASING DIAMETER:
ID 0.75 inches OD
LENGTH OF CASING 14.0 ft bgs

WELL SCREEN

☒ SCHEDULE 40 PVC
❑
PRODUCT
MFG. BY
CASING DIAMETER:
ID 0.75 inches OD
SLOT SIZE 0.010
LENGTH OF SCREEN 6.5 ft

TETRATECH EM INC

GAS MONITORING PROBE COMPLETION RECORD

DRILLING INFORMATION

DRILLING BEGAN:
DATE 09-12-02 TIME 11:18
WELL INSTALLATION BEGAN:
DATE 09-12-02 TIME
WELL COMPLETION FINISHED:
DATE 09-12-02 TIME
DRILLING CO. GREGG Drilling
DRILLER
LICENSE
DRILL RIG
DRILLING METHOD:
☒ HOLLOW STEM AUGER
❑ AIR ROTARY
❑
DIAMETER OF AUGERS:
ID OD 5.5 inches

BENTONITE SEAL

AMOUNT CALCULATED Not applicable
AMOUNT USED 75 pounds
❑ PELLETS, SIZE
☒ CHIPS, SIZE medium
❑
PRODUCT
MFG. BY
METHOD INSTALLED:
☒ POURED ❑ TREMIE
AMOUNT OF WATER USED 5 gallons

FILTER PACK

AMOUNT CALCULATED Not applicable
AMOUNT USED 200 pounds
❑ SAND, SIZE #2/12
❑ FORMATION COLLAPSE:
FROM 5.0 ft bgs TO 13.0 ft bgs
PRODUCT
MFG. BY
METHOD INSTALLED:
☒ POURED ❑ TREMIE

SURFACE COMPLETION

❑ FLUSH MOUNT
☒ ABOVE GROUND W/BUMPER POST
❑ CONCRETE ❑ ASPHALT

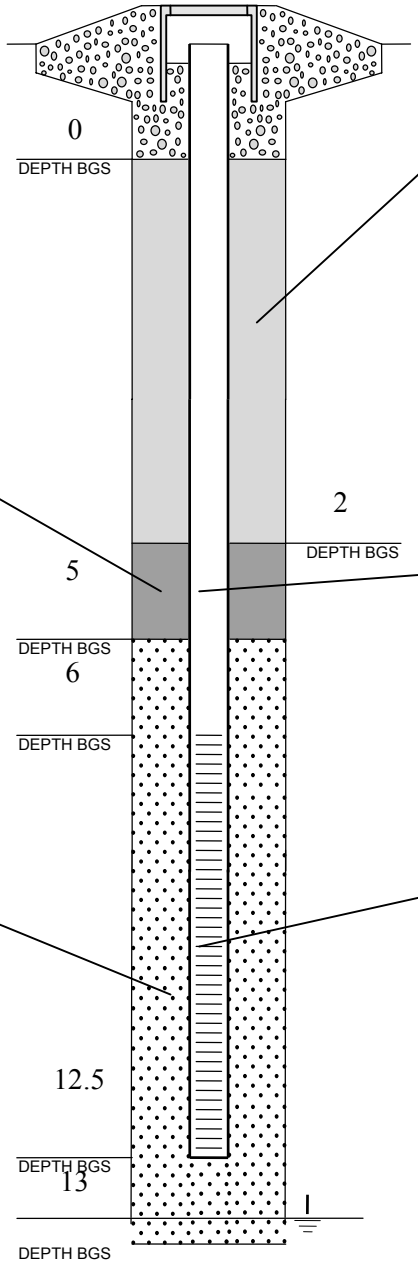

MONITORING WELL

MONITORING WELL NO. GMP05A
PROJECT Parcel E Nonstd Data Gaps Inv
SITE IR-01/21
BOREHOLE NO.
WELL PERMIT NO. Not Applicable
TOC TO BOTTOM OF WELL

ANNULAR SEAL

AMOUNT CALCULATED
AMOUNT USED
☒ GROUT FORMULA
PORTLAND CEMENT 95%
BENTONITE 5%
WATER
❑ PREPARED MIX
PRODUCT
MFG. BY
METHOD INSTALLED:
❑ POURED ❑ TREMIE

CASING

☒ SCHEDULE 40 PVC
❑
PRODUCT
MFG. BY
CASING DIAMETER:
ID 0.75 inches OD
LENGTH OF CASING 13.0 ft bgs

WELL SCREEN

☒ SCHEDULE 40 PVC
❑
PRODUCT
MFG. BY
CASING DIAMETER:
ID 0.16 inches OD
SLOT SIZE 0.010
LENGTH OF SCREEN 6.5 ft

TETRATECH EM INC

GAS MONITORING PROBE COMPLETION RECORD

DRILLING INFORMATION

DRILLING BEGAN:
DATE 04-15-02 TIME 14:25
WELL INSTALLATION BEGAN:
DATE 04-15-02 TIME
WELL COMPLETION FINISHED:
DATE 04-15-02 TIME
DRILLING CO. GREGG Drilling
DRILLER
LICENSE
DRILL RIG
DRILLING METHOD:
☒ HOLLOW STEM AUGER
❑ AIR ROTARY
❑
DIAMETER OF AUGERS:
ID OD 5.5 inches

BENTONITE SEAL

AMOUNT CALCULATED
AMOUNT USED 25 pounds
❑ PELLETS, SIZE
☒ CHIPS, SIZE medium
❑
PRODUCT
MFG. BY
METHOD INSTALLED:
☒ POURED ❑ TREMIE
AMOUNT OF WATER USED 5 gallons

FILTER PACK

AMOUNT CALCULATED
AMOUNT USED 250 pounds
❑ SAND, SIZE #2/16
❑ FORMATION COLLAPSE:
FROM 5.0 ft bgs TO 14.0 ft bgs
PRODUCT
MFG. BY
METHOD INSTALLED:
☒ POURED ❑ TREMIE

SURFACE COMPLETION

❑ FLUSH MOUNT
☒ ABOVE GROUND W/BUMPER POST
❑ CONCRETE ❑ ASPHALT

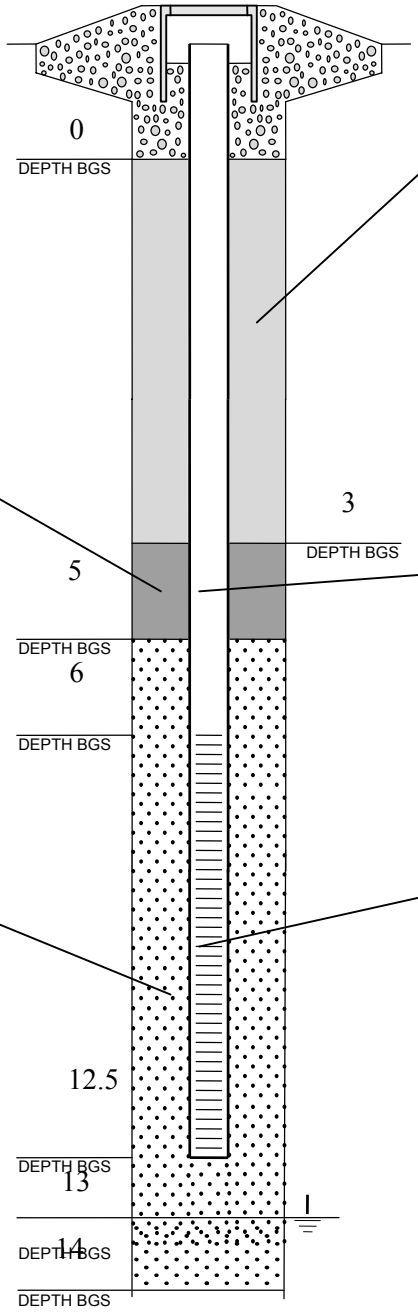

MONITORING WELL

MONITORING WELL NO. GMP05B
PROJECT Parcel E Nonstd Data Gaps Inv
SITE IR-01/21
BOREHOLE NO.
WELL PERMIT NO. Not Applicable
TOC TO BOTTOM OF WELL

ANNULAR SEAL

AMOUNT CALCULATED
AMOUNT USED 160 pounds
☒ GROUT FORMULA
PORTLAND CEMENT 95%
BENTONITE 5%
WATER 12 gallons
❑ PREPARED MIX
PRODUCT
MFG. BY
METHOD INSTALLED:
☒ POURED ❑ TREMIE

CASING

☒ SCHEDULE 40 PVC
❑
PRODUCT
MFG. BY
CASING DIAMETER:
ID 0.75 inches OD
LENGTH OF CASING 14.0 ft bgs

WELL SCREEN

☒ SCHEDULE 40 PVC
❑
PRODUCT
MFG. BY
CASING DIAMETER:
ID 0.75 inches OD
SLOT SIZE 0.010
LENGTH OF SCREEN 6.5 ft

TETRATECH EM INC

GAS MONITORING PROBE COMPLETION RECORD

DRILLING INFORMATION

DRILLING BEGAN:
DATE 04-15-02 TIME 15:00
WELL INSTALLATION BEGAN:
DATE 04-15-02 TIME
WELL COMPLETION FINISHED:
DATE 04-15-02 TIME
DRILLING CO. GREGG Drilling
DRILLER
LICENSE
DRILL RIG
DRILLING METHOD:
☒ HOLLOW STEM AUGER
❑ AIR ROTARY
❑
DIAMETER OF AUGERS:
ID OD 5.5 inches

BENTONITE SEAL

AMOUNT CALCULATED
AMOUNT USED 25 pounds
❑ PELLETS, SIZE
☒ CHIPS, SIZE medium
❑
PRODUCT
MFG. BY
METHOD INSTALLED:
☒ POURED ❑ TREMIE
AMOUNT OF WATER USED 5 gallons

FILTER PACK

AMOUNT CALCULATED
AMOUNT USED 200 pounds
❑ SAND, SIZE #2/16
❑ FORMATION COLLAPSE:
FROM 5.0 ft bgs TO 14.0 ft bgs
PRODUCT
MFG. BY
METHOD INSTALLED:
☒ POURED ❑ TREMIE

SURFACE COMPLETION

❑ FLUSH MOUNT
☒ABOVE GROUND W/BUMPER POST
❑ CONCRETE ❑ ASPHALT

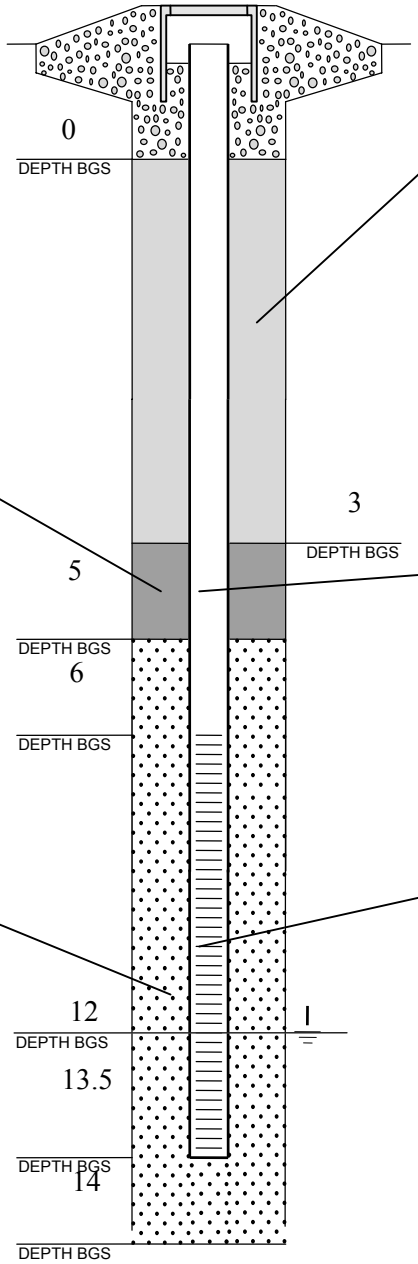

MONITORING WELL

MONITORING WELL NO. GMP06
PROJECT Parcel E Nonstd Data Gaps Inv
SITE IR-01/21
BOREHOLE NO.
WELL PERMIT NO. Not Applicable
TOC TO BOTTOM OF WELL

ANNULAR SEAL

AMOUNT CALCULATED
AMOUNT USED
☒ GROUT FORMULA
PORTLAND CEMENT 95%
BENTONITE 5%
WATER
❑ PREPARED MIX
PRODUCT
MFG. BY
METHOD INSTALLED:
❑ POURED ❑ TREMIE

CASING

☒ SCHEDULE 40 PVC
❑
PRODUCT
MFG. BY
CASING DIAMETER:
ID 0.75 inches OD
LENGTH OF CASING 14.0 ft bgs

WELL SCREEN

☒ SCHEDULE 40 PVC
❑
PRODUCT
MFG. BY
CASING DIAMETER:
ID 0.75 inches OD
SLOT SIZE 0.010
LENGTH OF SCREEN 7.5 ft

TETRATECH EM INC

GAS MONITORING PROBE COMPLETION RECORD

DRILLING INFORMATION

DRILLING BEGAN:
DATE 09-12-02 TIME
WELL INSTALLATION BEGAN:
DATE 09-12-02 TIME
WELL COMPLETION FINISHED:
DATE 09-12-02 TIME
DRILLING CO. GREGG Drilling
DRILLER
LICENSE
DRILL RIG
DRILLING METHOD:
☒ HOLLOW STEM AUGER
❑ AIR ROTARY
❑
DIAMETER OF AUGERS:
ID OD 5.5 inches

BENTONITE SEAL

AMOUNT CALCULATED
AMOUNT USED 50 pounds
❑ PELLETS, SIZE
☒ CHIPS, SIZE medium
❑
PRODUCT
MFG. BY
METHOD INSTALLED:
☒ POURED ❑ TREMIE
AMOUNT OF WATER USED 5 gallons

FILTER PACK

AMOUNT CALCULATED
AMOUNT USED 200 pounds
❑ SAND, SIZE #2/16
❑ FORMATION COLLAPSE:
FROM 5.0 ft bgs TO 14.0 ft bgs
PRODUCT
MFG. BY
METHOD INSTALLED:
☒ POURED ❑ TREMIE

SURFACE COMPLETION

❑ FLUSH MOUNT
☒ABOVE GROUND W/BUMPER POST
❑ CONCRETE ❑ ASPHALT

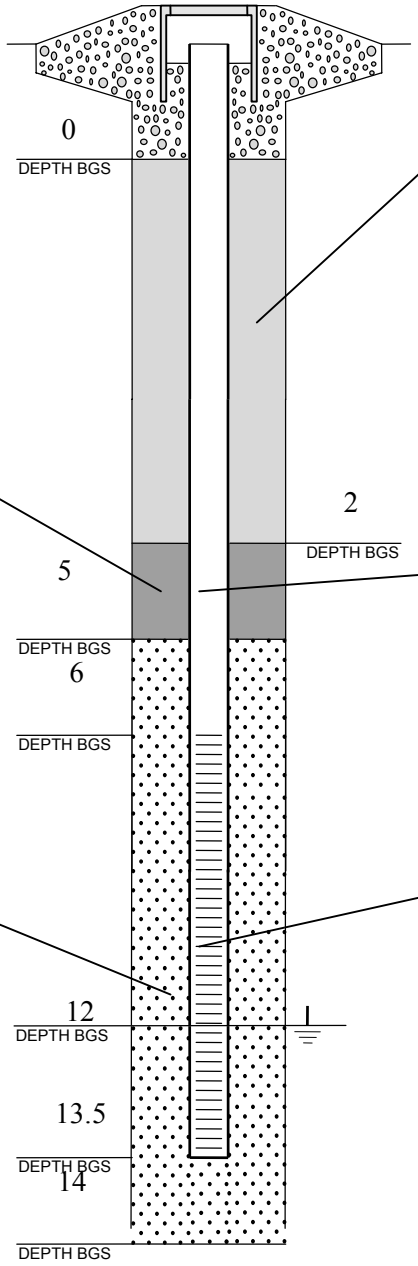

MONITORING WELL

MONITORING WELL NO. GMP06A
PROJECT Parcel E Nonstd Data Gaps Inv
SITE IR-01/21
BOREHOLE NO.
WELL PERMIT NO. Not Applicable
TOC TO BOTTOM OF WELL

ANNULAR SEAL

AMOUNT CALCULATED
AMOUNT USED
☒GROUT FORMULA
PORTLAND CEMENT 95%
BENTONITE 5%
WATER
❑ PREPARED MIX
PRODUCT
MFG. BY
METHOD INSTALLED:
❑ POURED ❑ TREMIE

CASING

☒ SCHEDULE 40 PVC
❑
PRODUCT
MFG. BY
CASING DIAMETER:
ID 0.75 inches OD
LENGTH OF CASING 14.0 ft bgs

WELL SCREEN

☒ SCHEDULE 40 PVC
❑
PRODUCT
MFG. BY
CASING DIAMETER:
ID 0.75 inches OD
SLOT SIZE 0.010
LENGTH OF SCREEN 7.5 ft

TETRATECH EM INC

GAS MONITORING PROBE COMPLETION RECORD

DRILLING INFORMATION

DRILLING BEGAN:
DATE 11-25-02 TIME
WELL INSTALLATION BEGAN:
DATE 11-25-02 TIME
WELL COMPLETION FINISHED:
DATE 11-25-02 TIME
DRILLING CO. GREGG Drilling
DRILLER
LICENSE
DRILL RIG
DRILLING METHOD:
☒ HOLLOW STEM AUGER
❑ AIR ROTARY
❑
DIAMETER OF AUGERS:
ID OD 5.5 inches

BENTONITE SEAL

AMOUNT CALCULATED
AMOUNT USED
❑ PELLETS, SIZE
☒ CHIPS, SIZE medium
❑
PRODUCT
MFG. BY
METHOD INSTALLED:
☒ POURED ❑ TREMIE
AMOUNT OF WATER USED 5 gallons

FILTER PACK

AMOUNT CALCULATED
AMOUNT USED 150 pounds
❑ SAND, SIZE #2/16
❑ FORMATION COLLAPSE:
FROM 5.0 ft bgs TO 14.0 ft bgs
PRODUCT
MFG. BY
METHOD INSTALLED:
☒ POURED ❑ TREMIE

SURFACE COMPLETION

❑FLUSH MOUNT
☒ABOVE GROUND W/BUMPER POST
❑CONCRETE ❑ ASPHALT

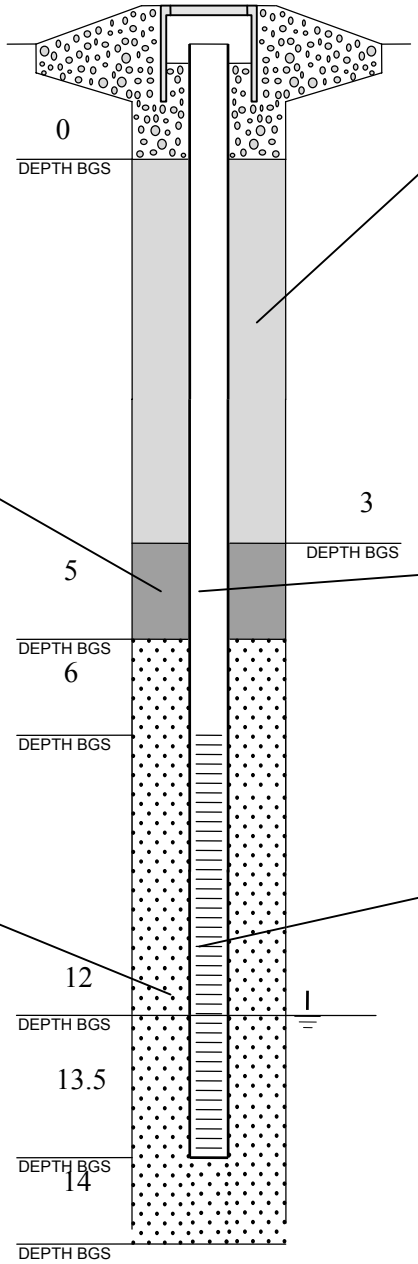

MONITORING WELL

MONITORING WELL NO. GMP06B
PROJECT Parcel E Nonstd Data Gaps Inv
SITE IR-01/21
BOREHOLE NO.
WELL PERMIT NO. Not applicable
TOC TO BOTTOM OF WELL

ANNULAR SEAL

AMOUNT CALCULATED
AMOUNT USED
☒GROUT FORMULA
PORTLAND CEMENT 95%
BENTONITE 5%
WATER
❑ PREPARED MIX
PRODUCT
MFG. BY
METHOD INSTALLED:
☒ POURED ❑ TREMIE

CASING

☒ SCHEDULE 40 PVC
❑
PRODUCT
MFG. BY
CASING DIAMETER:
ID 0.75 inches OD
LENGTH OF CASING 14.0 ft bgs

WELL SCREEN

☒ SCHEDULE 40 PVC
❑
PRODUCT
MFG. BY
CASING DIAMETER:
ID 0.75 inches OD
SLOT SIZE 0.010
LENGTH OF SCREEN 7.5 ft

TETRATECH EM INC

GAS MONITORING PROBE COMPLETION RECORD

DRILLING INFORMATION

DRILLING BEGAN:
DATE 04/15/02 TIME 15:00
WELL INSTALLATION BEGAN:
DATE 04/15/02 TIME
WELL COMPLETION FINISHED:
DATE 04/15/02 TIME
DRILLING CO. GREGG Drilling
DRILLER
LICENSE
DRILL RIG
DRILLING METHOD:
☒ HOLLOW STEM AUGER
❑ AIR ROTARY
❑
DIAMETER OF AUGERS:
ID OD 5.5 inches

BENTONITE SEAL

AMOUNT CALCULATED
AMOUNT USED 25 pounds
❑ PELLETS, SIZE
☒ CHIPS, SIZE medium
❑
PRODUCT
MFG. BY
METHOD INSTALLED:
☒ POURED ❑ TREMIE
AMOUNT OF WATER USED ? gallons

FILTER PACK

AMOUNT CALCULATED
AMOUNT USED
❑ SAND, SIZE #2/16
❑ FORMATION COLLAPSE:
FROM 5.0 ft bgs TO 14.0 ft bgs
PRODUCT
MFG. BY
METHOD INSTALLED:
☒ POURED ❑ TREMIE

SURFACE COMPLETION

❑ FLUSH MOUNT
☒ ABOVE GROUND W/BUMPER POST
❑ CONCRETE ❑ ASPHALT

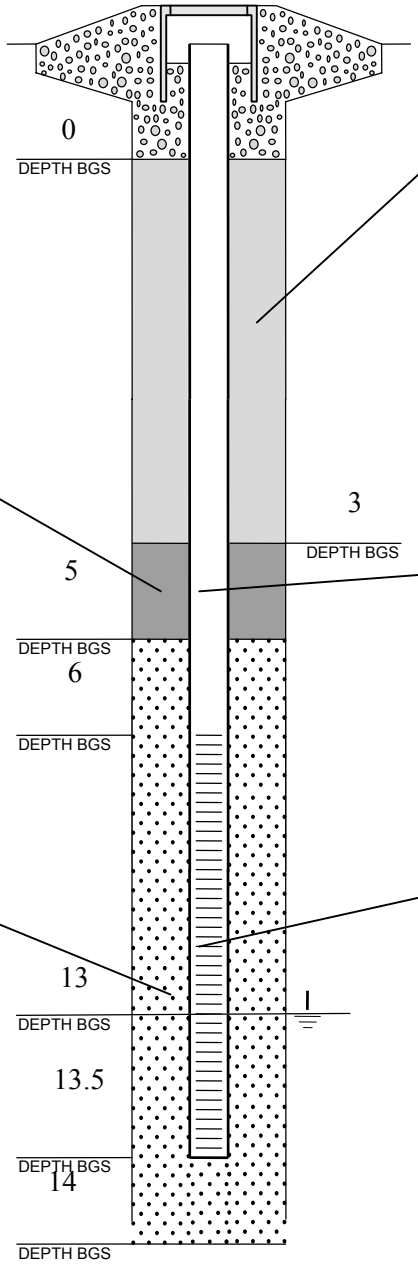

MONITORING WELL

MONITORING WELL NO. GMP07
PROJECT Parcel E Nonstd Data Gaps Inv
SITE IR-01/21
BOREHOLE NO.
WELL PERMIT NO. Not applicable
TOC TO BOTTOM OF WELL

ANNULAR SEAL

AMOUNT CALCULATED
AMOUNT USED
☒GROUT FORMULA
PORTLAND CEMENT 95%
BENTONITE 5%
WATER
❑ PREPARED MIX
PRODUCT
MFG. BY
METHOD INSTALLED:
❑ POURED ❑ TREMIE

CASING

☒ SCHEDULE 40 PVC
❑
PRODUCT
MFG. BY
CASING DIAMETER:
ID 0.75 inches OD
LENGTH OF CASING 14.0 ft bgs

WELL SCREEN

☒ SCHEDULE 40 PVC
❑
PRODUCT
MFG. BY
CASING DIAMETER:
ID 0.75 inches OD
SLOT SIZE 0.010
LENGTH OF SCREEN 7.5 ft

TETRATECH EM INC

GAS MONITORING PROBE COMPLETION RECORD

DRILLING INFORMATION

DRILLING BEGAN:
DATE 09-12-02 TIME 13:10
WELL INSTALLATION BEGAN:
DATE 09-12-02 TIME
WELL COMPLETION FINISHED:
DATE 09-12-02 TIME
DRILLING CO. GREGG Drilling
DRILLER
LICENSE
DRILL RIG
DRILLING METHOD:
☒ HOLLOW STEM AUGER
❑ AIR ROTARY
❑
DIAMETER OF AUGERS:
ID OD 5.5 inches

BENTONITE SEAL

AMOUNT CALCULATED
AMOUNT USED 50 lbs.
❑ PELLETS, SIZE
☒ CHIPS, SIZE medium
❑
PRODUCT
MFG. BY
METHOD INSTALLED:
☒ POURED ❑ TREMIE
AMOUNT OF WATER USED 5 gallons

FILTER PACK

AMOUNT CALCULATED
AMOUNT USED 200 pounds
❑ SAND, SIZE #2/16
❑ FORMATION COLLAPSE:
FROM 5.0 ft bgs TO 14.0 ft bgs
PRODUCT
MFG. BY
METHOD INSTALLED:
☒ POURED ❑ TREMIE

SURFACE COMPLETION

❑FLUSH MOUNT
☒ABOVE GROUND W/BUMPER POST
❑CONCRETE ❑ ASPHALT

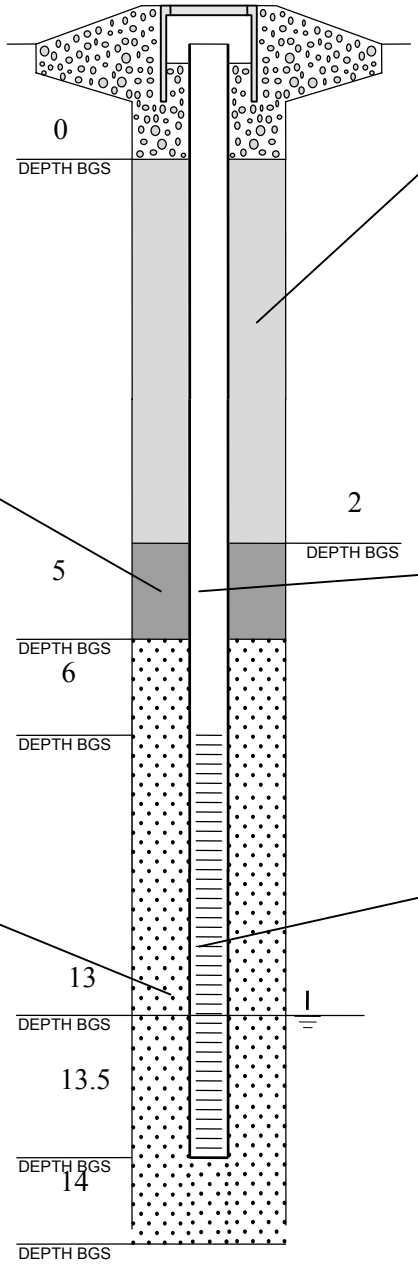

MONITORING WELL

MONITORING WELL NO. GMP07A
PROJECT Parcel E Nonstd Data Gaps Inv
SITE IR-01/21
BOREHOLE NO.
WELL PERMIT NO. Not applicable
TOC TO BOTTOM OF WELL

ANNULAR SEAL

AMOUNT CALCULATED
AMOUNT USED
☒GROUT FORMULA
PORTLAND CEMENT 95%
BENTONITE 5%
WATER
❑ PREPARED MIX
PRODUCT
MFG. BY
METHOD INSTALLED:
☒ POURED ❑ TREMIE

CASING

☒ SCHEDULE 40 PVC
❑
PRODUCT
MFG. BY
CASING DIAMETER:
ID 0.75 inches OD
LENGTH OF CASING 14.0 ft bgs

WELL SCREEN

☒ SCHEDULE 40 PVC
❑
PRODUCT
MFG. BY
CASING DIAMETER:
ID 0.75 inches OD
SLOT SIZE 0.010
LENGTH OF SCREEN 7.5 ft

TETRATECH EM INC

GAS MONITORING PROBE COMPLETION RECORD

DRILLING INFORMATION

DRILLING BEGAN:
DATE 04-16-02 TIME 08:00
WELL INSTALLATION BEGAN:
DATE 04-16-02 TIME
WELL COMPLETION FINISHED:
DATE 04-16-02 TIME
DRILLING CO. GREGG Drilling
DRILLER
LICENSE
DRILL RIG
DRILLING METHOD:
☒ HOLLOW STEM AUGER
❑ AIR ROTARY
❑
DIAMETER OF AUGERS:
ID OD 5.5 inches

BENTONITE SEAL

AMOUNT CALCULATED
AMOUNT USED 25 pounds
❑ PELLETS, SIZE
☒ CHIPS, SIZE medium
❑
PRODUCT
MFG. BY
METHOD INSTALLED:
☒ POURED ❑ TREMIE
AMOUNT OF WATER USED 5 gallons

FILTER PACK

AMOUNT CALCULATED
AMOUNT USED 200 pounds
❑ SAND, SIZE #2/16
❑ FORMATION COLLAPSE:
FROM 5.0 ft bgs TO 13.0 ft bgs
PRODUCT
MFG. BY
METHOD INSTALLED:
☒ POURED ❑ TREMIE

SURFACE COMPLETION

❑ FLUSH MOUNT
☒ ABOVE GROUND W/BUMPER POST
❑ CONCRETE ❑ ASPHALT

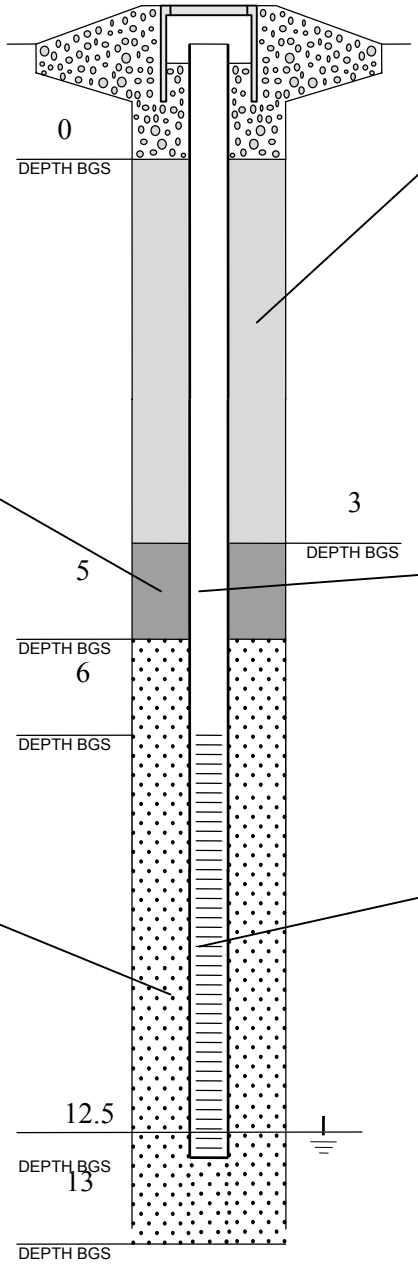

MONITORING WELL

MONITORING WELL NO. GMP08
PROJECT Parcel E Nonstd Data Gaps Inv
SITE IR-01/21
BOREHOLE NO.
WELL PERMIT NO. Not applicable
TOC TO BOTTOM OF WELL

ANNULAR SEAL

AMOUNT CALCULATED
AMOUNT USED
☒GROUT FORMULA
PORTLAND CEMENT 95%
BENTONITE 5%
WATER
❑ PREPARED MIX
PRODUCT
MFG. BY
METHOD INSTALLED:
❑ POURED ❑ TREMIE

CASING

☒ SCHEDULE 40 PVC
❑
PRODUCT
MFG. BY
CASING DIAMETER:
ID 0.75 inches OD
LENGTH OF CASING 13.0 ft bgs

WELL SCREEN

☒ SCHEDULE 40 PVC
❑
PRODUCT
MFG. BY
CASING DIAMETER:
ID 0.75 inches OD
SLOT SIZE 0.010
LENGTH OF SCREEN 6.5 ft

TETRATECH EM INC

GAS MONITORING PROBE COMPLETION RECORD

DRILLING INFORMATION

DRILLING BEGAN:
DATE 09-12-02 TIME 08:00
WELL INSTALLATION BEGAN:
DATE 09-12-02 TIME
WELL COMPLETION FINISHED:
DATE 09-12-02 TIME
DRILLING CO. GREGG Drilling
DRILLER
LICENSE
DRILL RIG
DRILLING METHOD:
☒ HOLLOW STEM AUGER
❑ AIR ROTARY
❑
DIAMETER OF AUGERS:
ID OD 5.5 inches

BENTONITE SEAL

AMOUNT CALCULATED
AMOUNT USED
❑ PELLETS, SIZE
☒ CHIPS, SIZE 0.75 inches, medium
❑
PRODUCT
MFG. BY
METHOD INSTALLED:
☒ POURED ❑ TREMIE
AMOUNT OF WATER USED 5 gallons

FILTER PACK

AMOUNT CALCULATED
AMOUNT USED 200 pounds
❑ SAND, SIZE #2/16
❑ FORMATION COLLAPSE:
FROM 4.0 ft bgs TO 12.0 ft bgs
PRODUCT
MFG. BY
METHOD INSTALLED:
☒ POURED ❑ TREMIE

SURFACE COMPLETION

❑FLUSH MOUNT
☒ABOVE GROUND W/BUMPER POST
❑CONCRETE ❑ ASPHALT

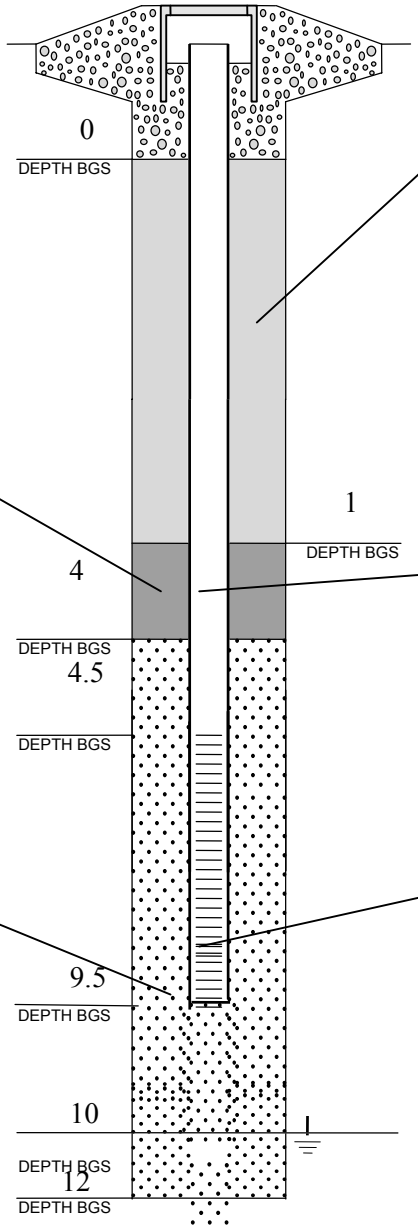

MONITORING WELL

MONITORING WELL NO. GMP08A
PROJECT Parcel E Nonstd Data Gaps Inv
SITE IR-01/21
BOREHOLE NO.
WELL PERMIT NO. Not applicable
TOC TO BOTTOM OF WELL

ANNULAR SEAL

AMOUNT CALCULATED
AMOUNT USED
☒GROUT FORMULA
PORTLAND CEMENT 95%
BENTONITE 5%
WATER
❑ PREPARED MIX
PRODUCT
MFG. BY
METHOD INSTALLED:
☒ POURED ❑ TREMIE

CASING

☒ SCHEDULE 40 PVC
❑
PRODUCT
MFG. BY
CASING DIAMETER:
ID 0.75 inches OD
LENGTH OF CASING 12.0 ft bgs

WELL SCREEN

☒ SCHEDULE 40 PVC
❑
PRODUCT
MFG. BY
CASING DIAMETER:
ID 0.75 inches OD
SLOT SIZE 0.010
LENGTH OF SCREEN 5.0 ft

TETRATECH EM INC

GAS MONITORING PROBE COMPLETION RECORD

DRILLING INFORMATION

DRILLING BEGAN:
DATE 04-16-02 TIME 08:30
WELL INSTALLATION BEGAN:
DATE 04-16-02 TIME
WELL COMPLETION FINISHED:
DATE 04-16-02 TIME
DRILLING CO. GREGG Drilling
DRILLER
LICENSE
DRILL RIG

DRILLING METHOD:
☒ HOLLOW STEM AUGER
❑ AIR ROTARY
❑

DIAMETER OF AUGERS:
ID OD 5.5 inches

BENTONITE SEAL

AMOUNT CALCULATED
AMOUNT USED 25 pounds
❑ PELLETS, SIZE
☒ CHIPS, SIZE medium
❑
PRODUCT
MFG. BY
METHOD INSTALLED:
☒ POURED ❑ TREMIE
AMOUNT OF WATER USED 5 gallons

FILTER PACK

AMOUNT CALCULATED
AMOUNT USED 175 pounds
❑ SAND, SIZE #2/16
❑ FORMATION COLLAPSE:
FROM 5.0 ft bgs TO 10 ft bgs
PRODUCT
MFG. BY
METHOD INSTALLED:
☒ POURED ❑ TREMIE

SURFACE COMPLETION

❑ FLUSH MOUNT
☒ ABOVE GROUND W/BUMPER POST
❑CONCRETE ❑ ASPHALT

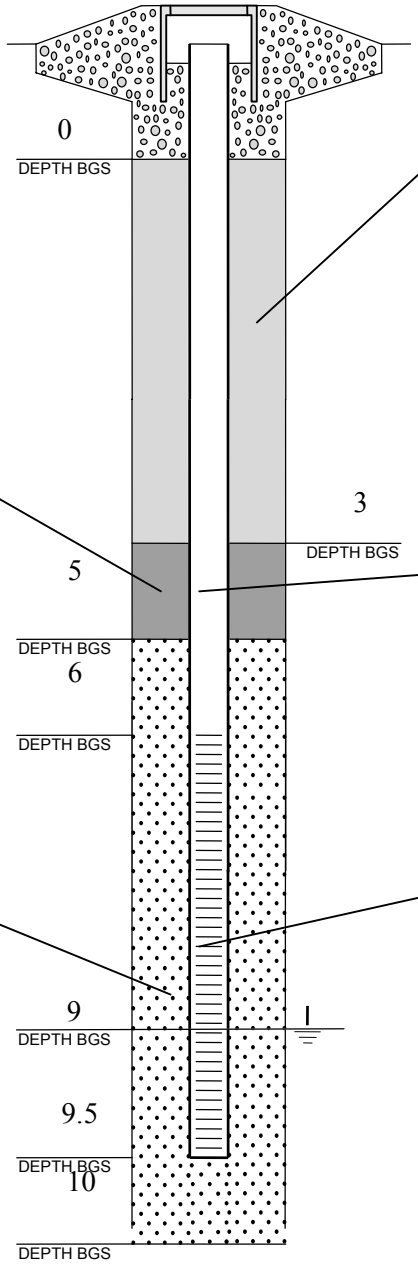

MONITORING WELL

MONITORING WELL NO. GMP09
PROJECT Parcel E Nonstd Data Gaps Inv
SIT

TETRATECH EM INC

ANNULAR SEAL

AMOUNT CALCULATED
AMOUNT USED
☒ROUT FORMULA
PORTLAND CEMENT 95%
BENTONITE 5%
WATER
❑ PREPARED MIX
PRODUCT
MFG. BY
METHOD INSTALLED:
❑ POURED ❑ TREMIE

CASING

☒ SCHEDULE 40 PVC
❑
PRODUCT
MFG. BY
CASING DIAMETER:
ID 0.75 inches OD
LENGTH OF CASING 10.0 ft bgs

WELL SCREEN

☒ SCHEDULE 40 PVC
❑
PRODUCT
MFG. BY
CASING DIAMETER:
ID 0.75 inches OD
SLOT SIZE 0.010
LENGTH OF SCREEN 3.5 ft

TETRATECH EM INC

GAS MONITORING PROBE COMPLETION RECORD

DRILLING INFORMATION

DRILLING BEGAN:
DATE 04-15-02 TIME 09:00
WELL INSTALLATION BEGAN:
DATE 04-15-02 TIME
WELL COMPLETION FINISHED:
DATE 04-15-02 TIME
DRILLING CO. GREGG Drilling
DRILLER
LICENSE
DRILL RIG

DRILLING METHOD:
☒ HOLLOW STEM AUGER
❑ AIR ROTARY
❑

DIAMETER OF AUGERS:
ID OD 5.5 inches

BENTONITE SEAL

AMOUNT CALCULATED
AMOUNT USED
❑ PELLETS, SIZE
☒ CHIPS, SIZE medium
❑
PRODUCT
MFG. BY
METHOD INSTALLED:
☒ POURED ❑ TREMIE
AMOUNT OF WATER USED 2.5 gallons

FILTER PACK

AMOUNT CALCULATED
AMOUNT USED 75 pounds
❑ SAND, SIZE #2/16
❑ FORMATION COLLAPSE:
FROM 3.0 ft bgs TO 7.0 ft bgs
PRODUCT
MFG. BY
METHOD INSTALLED:
☒ POURED ❑ TREMIE

SURFACE COMPLETION

❑ FLUSH MOUNT
☒ABOVE GROUND W/BUMPER POST
❑ CONCRETE ❑ ASPHALT

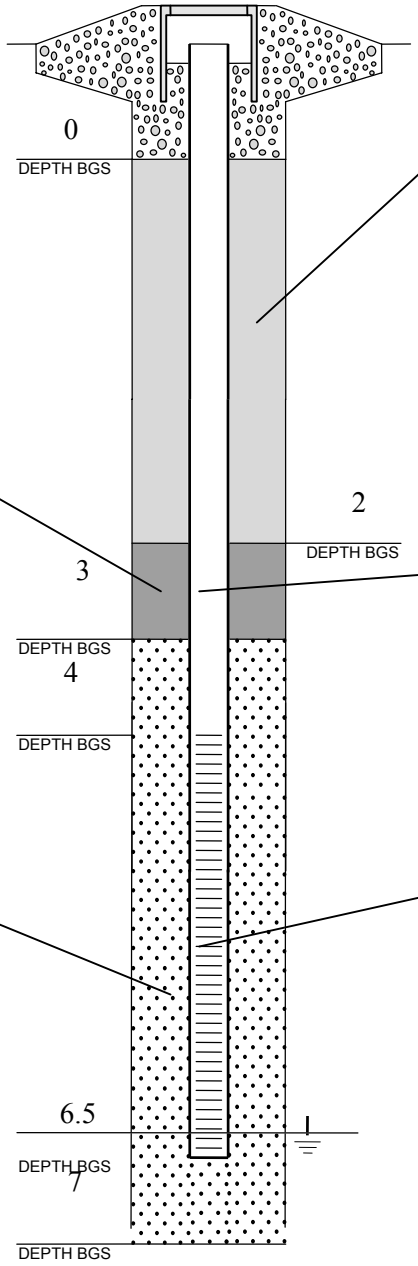

MONITORING WELL

MONITORING WELL NO. GMP10
PROJECT Parcel E Nonstd Data Gaps Inv
SITE IR-01/21
BOREHOLE NO.
WELL PERMIT NO. Not applicable
TOC TO BOTTOM OF WELL

ANNULAR SEAL

AMOUNT CALCULATED
AMOUNT USED
☒GROUT FORMULA
PORTLAND CEMENT 95%
BENTONITE 5%
WATER
❑ PREPARED MIX
PRODUCT
MFG. BY
METHOD INSTALLED:
☒POURED ❑ TREMIE

CASING

☒ SCHEDULE 40 PVC
❑
PRODUCT
MFG. BY
CASING DIAMETER:
ID 0.75 inches OD
LENGTH OF CASING 7.0 ft bgs

WELL SCREEN

☒ SCHEDULE 40 PVC
❑
PRODUCT
MFG. BY
CASING DIAMETER:
ID 0.75 inches OD
SLOT SIZE 0.010
LENGTH OF SCREEN 2.5 ft

TETRATECH EM INC

GAS MONITORING PROBE COMPLETION RECORD

DRILLING INFORMATION

DRILLING BEGAN:
DATE 04-15-02 TIME 09:36
WELL INSTALLATION BEGAN:
DATE 04-15-02 TIME
WELL COMPLETION FINISHED:
DATE 04-15-02 TIME
DRILLING CO. GREGG Drilling
DRILLER
LICENSE
DRILL RIG
DRILLING METHOD:
☒ HOLLOW STEM AUGER
❑ AIR ROTARY
❑
DIAMETER OF AUGERS:
ID OD 5.5 inches

BENTONITE SEAL

AMOUNT CALCULATED
AMOUNT USED 10 pounds
❑ PELLETS, SIZE
☒ CHIPS, SIZE medium
❑
PRODUCT
MFG. BY
METHOD INSTALLED:
☒ POURED ❑ TREMIE
AMOUNT OF WATER USED 2.5 gallons

FILTER PACK

AMOUNT CALCULATED
AMOUNT USED 75 pounds
❑ SAND, SIZE #2/16
❑ FORMATION COLLAPSE:
FROM 3.0 ft bgs TO 6.0 ft bgs
PRODUCT
MFG. BY
METHOD INSTALLED:
☒ POURED ❑ TREMIE

SURFACE COMPLETION

❑ FLUSH MOUNT
☒ABOVE GROUND W/BUMPER POST
❑CONCRETE ❑ ASPHALT

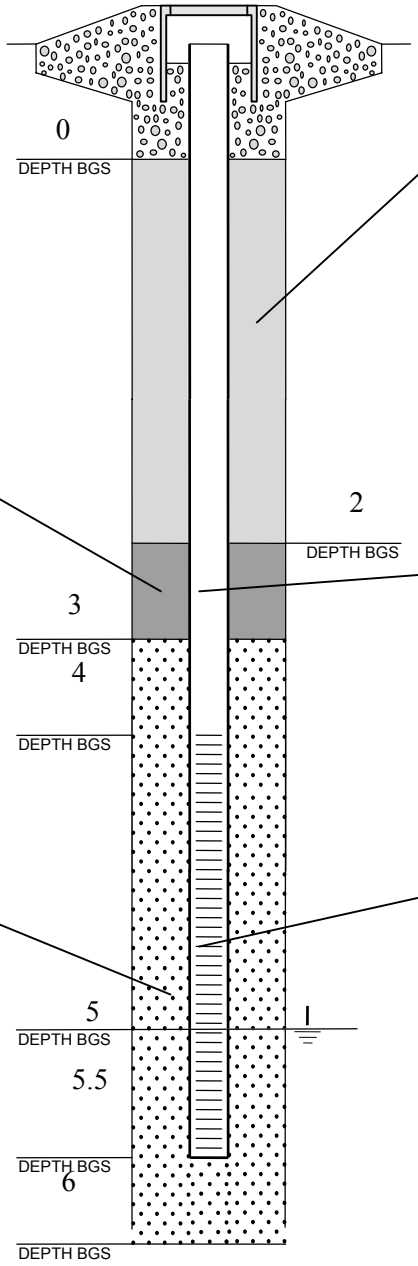

MONITORING WELL

MONITORING WELL NO. GMP11
PROJECT Parcel E Nonstd Data Gaps Inv
SITE IR-01/21
BOREHOLE NO.
WELL PERMIT NO. Not applicable
TOC TO BOTTOM OF WELL

ANNULAR SEAL

AMOUNT CALCULATED
AMOUNT USED
☒GROUT FORMULA
PORTLAND CEMENT 95%
BENTONITE 5%
WATER
❑ PREPARED MIX
PRODUCT
MFG. BY
METHOD INSTALLED:
☒POURED ❑ TREMIE

CASING

☒ SCHEDULE 40 PVC
❑
PRODUCT
MFG. BY
CASING DIAMETER:
ID 0.75 inches OD
LENGTH OF CASING 6.0 ft bgs

WELL SCREEN

☒ SCHEDULE 40 PVC
❑
PRODUCT
MFG. BY
CASING DIAMETER:
ID 0.75 inches OD
SLOT SIZE 0.010
LENGTH OF SCREEN 1.5 ft

TETRATECH EM INC

GAS MONITORING PROBE COMPLETION RECORD

DRILLING INFORMATION

DRILLING BEGAN:
DATE 11-25-02 TIME
WELL INSTALLATION BEGAN:
DATE 11-25-02 TIME
WELL COMPLETION FINISHED:
DATE 11-25-02 TIME
DRILLING CO. GREGG Drilling
DRILLER
LICENSE
DRILL RIG
DRILLING METHOD:
☒ HOLLOW STEM AUGER
❑ AIR ROTARY
❑
DIAMETER OF AUGERS:
ID OD 5.5 inches

BENTONITE SEAL

AMOUNT CALCULATED
AMOUNT USED
❑ PELLETS, SIZE
☒ CHIPS, SIZE medium
❑
PRODUCT
MFG. BY
METHOD INSTALLED:
☒ POURED ❑ TREMIE
AMOUNT OF WATER USED

FILTER PACK

AMOUNT CALCULATED
AMOUNT USED 75 pounds
❑ SAND, SIZE #2/16
❑ FORMATION COLLAPSE:
FROM 3.0 ft bgs TO 6.0 ft bgs
PRODUCT
MFG. BY
METHOD INSTALLED:
☒ POURED ❑ TREMIE

SURFACE COMPLETION

❑FLUSH MOUNT
☒ABOVE GROUND W/BUMPER POST
❑CONCRETE ❑ ASPHALT

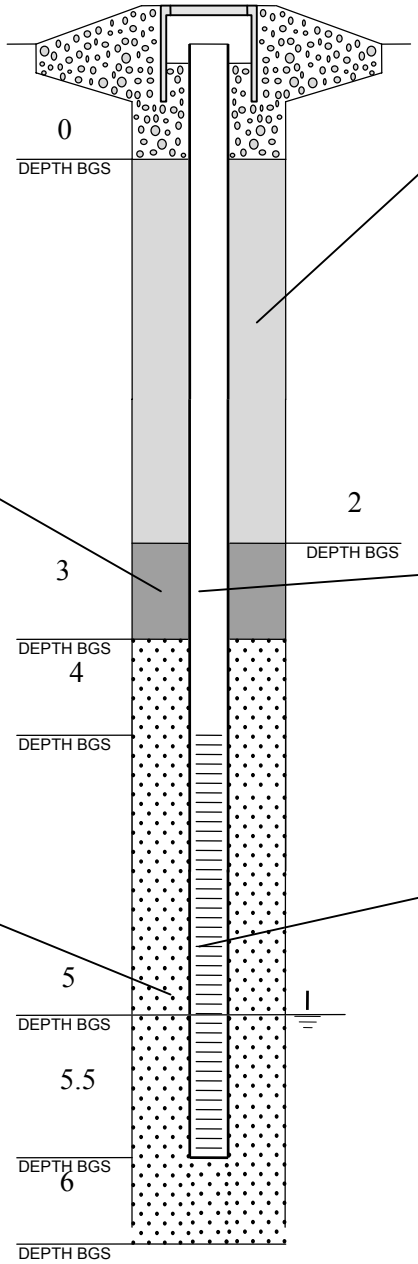

MONITORING WELL

MONITORING WELL NO. GMP11A
PROJECT Parcel E Nonstd Data Gaps Inv
SITE IR-01/21
BOREHOLE NO.
WELL PERMIT NO. Not applicable
TOC TO BOTTOM OF WELL

ANNULAR SEAL

AMOUNT CALCULATED
AMOUNT USED
☒ GROUT FORMULA
PORTLAND CEMENT 95%
BENTONITE 5%
WATER
❑ PREPARED MIX
PRODUCT
MFG. BY
METHOD INSTALLED:
☒ POURED ❑ TREMIE

CASING

☒ SCHEDULE 40 PVC
❑
PRODUCT
MFG. BY
CASING DIAMETER:
ID 0.75 inches OD
LENGTH OF CASING 6.0 ft bgs

WELL SCREEN

☒ SCHEDULE 40 PVC
❑
PRODUCT
MFG. BY
CASING DIAMETER:
ID 0.75 inches OD
SLOT SIZE 0.010
LENGTH OF SCREEN 1.5 ft

TETRATECH EM INC

GAS MONITORING PROBE COMPLETION RECORD

DRILLING INFORMATION

DRILLING BEGAN:
DATE 04-15-02 TIME 10:00
WELL INSTALLATION BEGAN:
DATE 04-15-02 TIME
WELL COMPLETION FINISHED:
DATE 04-15-02 TIME
DRILLING CO. GREGG Drilling
DRILLER
LICENSE
DRILL RIG
DRILLING METHOD:
☒ HOLLOW STEM AUGER
❑ AIR ROTARY
❑
DIAMETER OF AUGERS:
ID OD 5.5 inches

BENTONITE SEAL

AMOUNT CALCULATED
AMOUNT USED 25 pounds
❑ PELLETS, SIZE
☒ CHIPS, SIZE medium
❑
PRODUCT
MFG. BY
METHOD INSTALLED:
☒ POURED ❑ TREMIE
AMOUNT OF WATER USED 5 gallons

FILTER PACK

AMOUNT CALCULATED
AMOUNT USED 200 pounds
❑ SAND, SIZE #2/16
❑ FORMATION COLLAPSE:
FROM 4.0 ft bgs TO 13.5 ft bgs
PRODUCT
MFG. BY
METHOD INSTALLED:
☒ POURED ❑ TREMIE

SURFACE COMPLETION

❑ FLUSH MOUNT
☒ABOVE GROUND W/BUMPER POST
❑CONCRETE ❑ ASPHALT

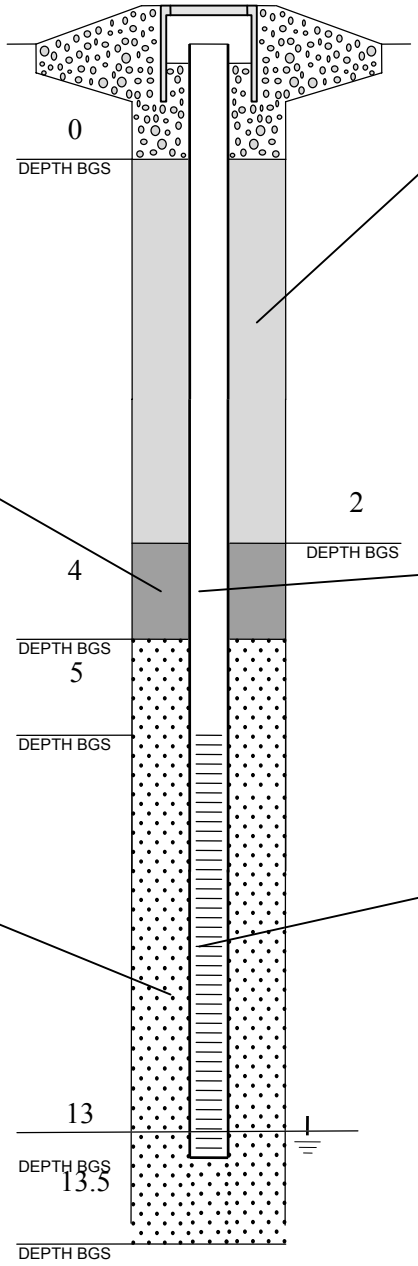

MONITORING WELL

MONITORING WELL NO. GMP12
PROJECT Parcel E Nonstd Data Gaps Inv
SITE IR-01/21
BOREHOLE NO.
WELL PERMIT NO. Not applicable
TOC TO BOTTOM OF WELL

ANNULAR SEAL

AMOUNT CALCULATED
AMOUNT USED 160 lbs
☒ GROUT FORMULA
PORTLAND CEMENT 95%
BENTONITE 5%
WATER
❑ PREPARED MIX
PRODUCT
MFG. BY
METHOD INSTALLED:
☒ POURED ❑ TREMIE

CASING

☒ SCHEDULE 40 PVC
❑
PRODUCT
MFG. BY
CASING DIAMETER:
ID 0.75 inches OD
LENGTH OF CASING 13.5 ft bgs

WELL SCREEN

☒ SCHEDULE 40 PVC
❑
PRODUCT
MFG. BY
CASING DIAMETER:
ID 0.75 inches OD
SLOT SIZE 0.010
LENGTH OF SCREEN 8 ft

TETRATECH EM INC

GAS MONITORING PROBE COMPLETION RECORD

DRILLING INFORMATION

DRILLING BEGAN:
DATE 05-31-02 TIME 8:00
WELL INSTALLATION BEGAN:
DATE 05-31-02 TIME
WELL COMPLETION FINISHED:
DATE 05-31-02 TIME
DRILLING CO. GREGG Drilling
DRILLER
LICENSE
DRILL RIG
DRILLING METHOD:
☒ HOLLOW STEM AUGER
❑ AIR ROTARY
❑
DIAMETER OF AUGERS:
ID OD 5.5 inches

BENTONITE SEAL

AMOUNT CALCULATED
AMOUNT USED
❑ PELLETS, SIZE
☒ CHIPS, SIZE 0.75 inches, medium
❑
PRODUCT
MFG. BY
METHOD INSTALLED:
☒ POURED ❑ TREMIE
AMOUNT OF WATER USED 5 gallons

FILTER PACK

AMOUNT CALCULATED
AMOUNT USED 150 pounds
❑ SAND, SIZE #2/16
❑ FORMATION COLLAPSE:
FROM 5.0 ft bgs TO 13.0 ft bgs
PRODUCT
MFG. BY
METHOD INSTALLED:
☒ POURED ❑ TREMIE

SURFACE COMPLETION

☒ FLUSH MOUNT
❑ ABOVE GROUND W/BUMPER POST
❑CONCRETE ❑ ASPHALT

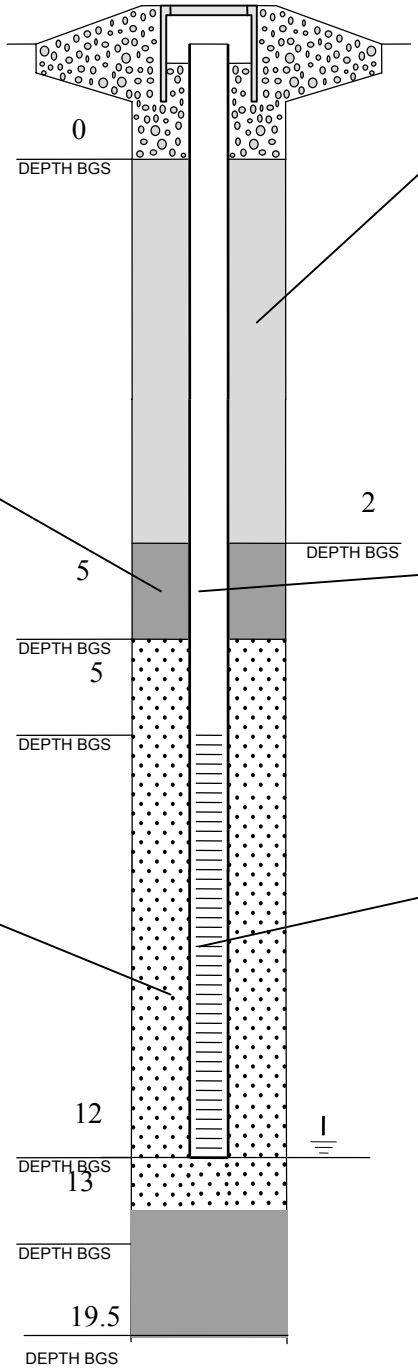

MONITORING WELL

MONITORING WELL NO. GMP13
PROJECT Parcel E Nonstd Data Gaps Inv
SITE IR-01/21
BOREHOLE NO.
WELL PERMIT NO. Not applicable
TOC TO BOTTOM OF WELL

ANNULAR SEAL

AMOUNT CALCULATED
AMOUNT USED 60 lbs
☒GROUT FORMULA
PORTLAND CEMENT 95%
BENTONITE 5%
WATER
❑ PREPARED MIX
PRODUCT
MFG. BY
METHOD INSTALLED:
☒ POURED ❑ TREMIE

CASING

☒ SCHEDULE 40 PVC
❑
PRODUCT
MFG. BY
CASING DIAMETER:
ID 0.75 inches OD
LENGTH OF CASING 6.0 ft bgs

WELL SCREEN

☒ SCHEDULE 40 PVC
❑
PRODUCT
MFG. BY
CASING DIAMETER:
ID 0.75 inches OD
SLOT SIZE 0.010
LENGTH OF SCREEN 6.0 ft

TETRATECH EM INC

GAS MONITORING PROBE COMPLETION RECORD

DRILLING INFORMATION

DRILLING BEGAN:
DATE 05-31-02 TIME 9:12
WELL INSTALLATION BEGAN:
DATE 05-31-02 TIME
WELL COMPLETION FINISHED:
DATE 05-31-02 TIME
DRILLING CO. GREGG Drilling
DRILLER
LICENSE
DRILL RIG
DRILLING METHOD:
☒ HOLLOW STEM AUGER
❑ AIR ROTARY
❑
DIAMETER OF AUGERS:
ID OD 5.5 inches

BENTONITE SEAL

AMOUNT CALCULATED
AMOUNT USED 50 lbs.
❑ PELLETS, SIZE
☒ CHIPS, SIZE medium
❑
PRODUCT
MFG. BY
METHOD INSTALLED:
☒ POURED ❑ TREMIE
AMOUNT OF WATER USED 5 gallons

FILTER PACK

AMOUNT CALCULATED
AMOUNT USED 50 pounds
❑ SAND, SIZE #2/16
❑ FORMATION COLLAPSE:
FROM 5.5 ft bgs TO 10.5 ft bgs
PRODUCT
MFG. BY
METHOD INSTALLED:
☒ POURED ❑ TREMIE

SURFACE COMPLETION

☒FLUSH MOUNT
❑ABOVE GROUND W/BUMPER POST
❑CONCRETE ❑ ASPHALT

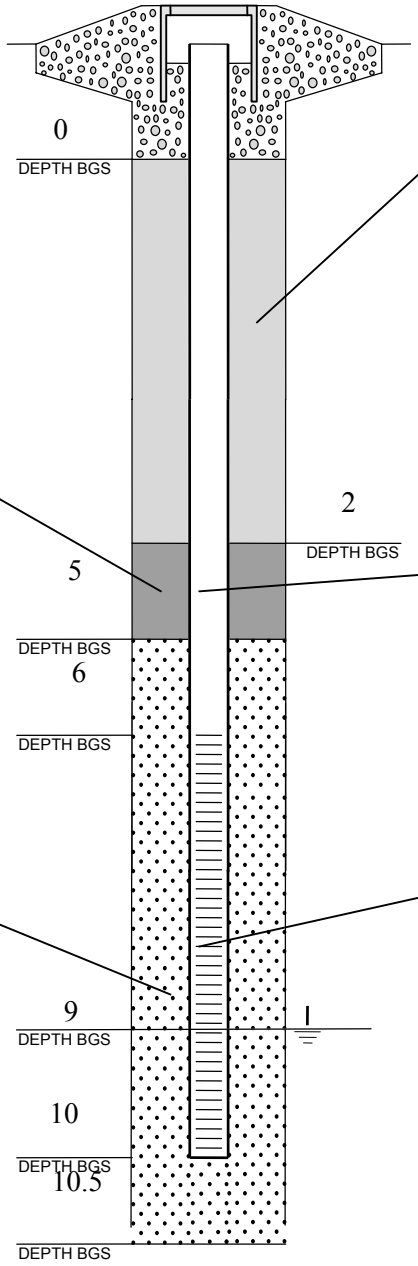

MONITORING WELL

MONITORING WELL NO. GMP14
PROJECT Parcel E Nonstd Data Gaps Inv
SITE IR-01/21
BOREHOLE NO.
WELL PERMIT NO. Not applicable
TOC TO BOTTOM OF WELL

ANNULAR SEAL

AMOUNT CALCULATED
AMOUNT USED
☒ GROUT FORMULA
PORTLAND CEMENT 95%
BENTONITE 5%
WATER
❑ PREPARED MIX
PRODUCT
MFG. BY
METHOD INSTALLED:
☒ POURED ❑ TREMIE

CASING

☒ SCHEDULE 40 PVC
❑
PRODUCT
MFG. BY
CASING DIAMETER:
ID 0.75 inches OD
LENGTH OF CASING 10.5 ft bgs

WELL SCREEN

☒ SCHEDULE 40 PVC
❑
PRODUCT
MFG. BY
CASING DIAMETER:
ID 0.75 inches OD
SLOT SIZE 0.010
LENGTH OF SCREEN 4 ft

TETRATECH EM INC

GAS MONITORING PROBE COMPLETION RECORD

DRILLING INFORMATION

DRILLING BEGAN:
DATE 05-31-02 TIME 9:46
WELL INSTALLATION BEGAN:
DATE 05-31-02 TIME
WELL COMPLETION FINISHED:
DATE 05-31-02 TIME
DRILLING CO. GREGG Drilling
DRILLER
LICENSE
DRILL RIG
DRILLING METHOD:
☒ HOLLOW STEM AUGER
❑ AIR ROTARY
❑
DIAMETER OF AUGERS:
ID OD 5.5 inches

BENTONITE SEAL

AMOUNT CALCULATED
AMOUNT USED 75 lbs
❑ PELLETS, SIZE
☒ CHIPS, SIZE medium
❑
PRODUCT
MFG. BY
METHOD INSTALLED:
☒ POURED ❑ TREMIE
AMOUNT OF WATER USED

FILTER PACK

AMOUNT CALCULATED
AMOUNT USED 75 pounds
❑ SAND, SIZE #2/16
❑ FORMATION COLLAPSE:
FROM 5.0 ft bgs TO 12.5 ft bgs
PRODUCT
MFG. BY
METHOD INSTALLED:
☒ POURED ❑ TREMIE

SURFACE COMPLETION

☒FLUSH MOUNT
❑ABOVE GROUND W/BUMPER POST
❑CONCRETE ❑ ASPHALT

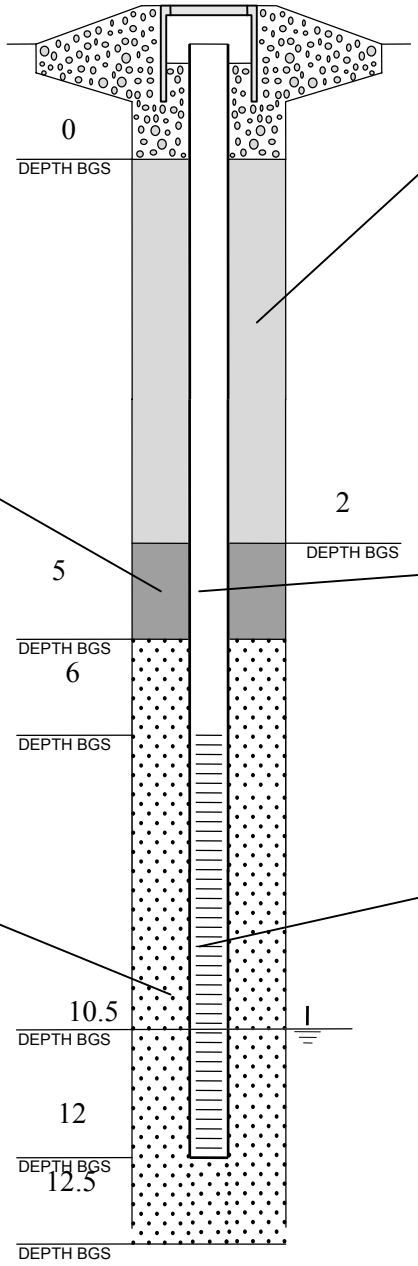

MONITORING WELL

MONITORING WELL NO. GMP15
PROJECT Parcel E Nonstd Data Gaps Inv
SITE IR-01/21
BOREHOLE NO.
WELL PERMIT NO. Not applicable
TOC TO BOTTOM OF WELL

ANNULAR SEAL

AMOUNT CALCULATED
AMOUNT USED
☒ GROUT FORMULA
PORTLAND CEMENT 95%
BENTONITE 5%
WATER
❑ PREPARED MIX
PRODUCT
MFG. BY
METHOD INSTALLED:
☒ POURED ❑ TREMIE

CASING

☒ SCHEDULE 40 PVC
❑
PRODUCT
MFG. BY
CASING DIAMETER:
ID 0.75 inches OD
LENGTH OF CASING 12.5 ft bgs

WELL SCREEN

☒ SCHEDULE 40 PVC
❑
PRODUCT
MFG. BY
CASING DIAMETER:
ID 0.75 inches OD
SLOT SIZE 0.010
LENGTH OF SCREEN 6.0 ft

TETRATECH EM INC

GAS MONITORING PROBE COMPLETION RECORD

DRILLING INFORMATION

DRILLING BEGAN:
DATE 05-31-02 TIME 10:26
WELL INSTALLATION BEGAN:
DATE 05-31-02 TIME
WELL COMPLETION FINISHED:
DATE 05-31-02 TIME
DRILLING CO. GREGG Drilling
DRILLER
LICENSE
DRILL RIG
DRILLING METHOD:
☒ HOLLOW STEM AUGER
❑ AIR ROTARY
❑
DIAMETER OF AUGERS:
ID OD 5.5 inches

BENTONITE SEAL

AMOUNT CALCULATED
AMOUNT USED 50 lbs
❑ PELLETS, SIZE
☒ CHIPS, SIZE medium
❑
PRODUCT
MFG. BY
METHOD INSTALLED:
☒ POURED ❑ TREMIE
AMOUNT OF WATER USED

FILTER PACK

AMOUNT CALCULATED
AMOUNT USED 100 pounds
❑ SAND, SIZE #2/16
❑ FORMATION COLLAPSE:
FROM 4.0 ft bgs TO 10.5 ft bgs
PRODUCT
MFG. BY
METHOD INSTALLED:
☒ POURED ❑ TREMIE

SURFACE COMPLETION

☒FLUSH MOUNT
❑ABOVE GROUND W/BUMPER POST
☐CONCRETE ☒ ASPHALT

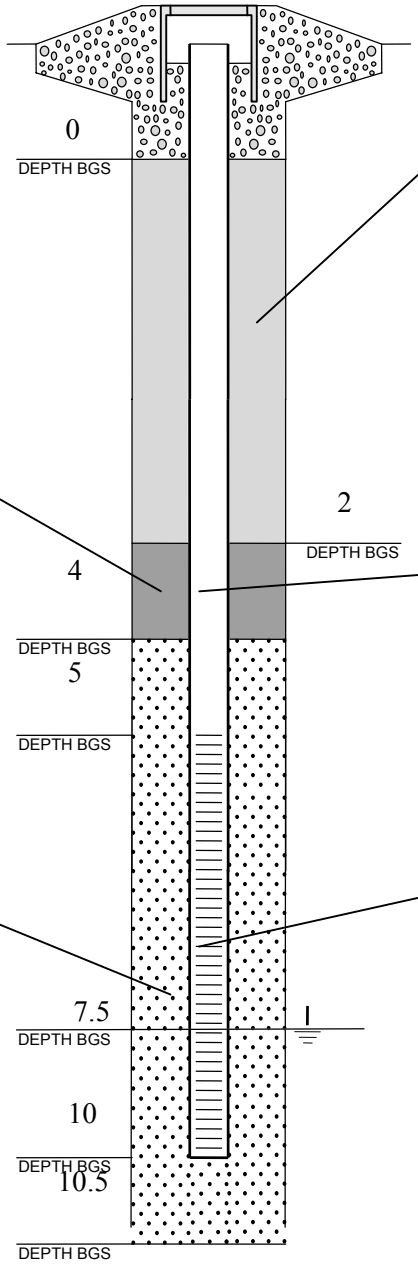

MONITORING WELL

MONITORING WELL NO. GMP16
PROJECT Parcel E Nonstd Data Gaps Inv
SITE IR-01/21
BOREHOLE NO.
WELL PERMIT NO. Not applicable
TOC TO BOTTOM OF WELL

ANNULAR SEAL

AMOUNT CALCULATED
AMOUNT USED
☒ GROUT FORMULA
PORTLAND CEMENT 95%
BENTONITE 5%
WATER
❑ PREPARED MIX
PRODUCT
MFG. BY
METHOD INSTALLED:
☒ POURED ❑ TREMIE

CASING

☒ SCHEDULE 40 PVC
❑
PRODUCT
MFG. BY
CASING DIAMETER:
ID 0.75 inches OD
LENGTH OF CASING 10.5 ft bgs

WELL SCREEN

☒ SCHEDULE 40 PVC
❑
PRODUCT
MFG. BY
CASING DIAMETER:
ID 0.75 inches OD
SLOT SIZE 0.010
LENGTH OF SCREEN 5.0 ft

TETRATECH EM INC

GAS MONITORING PROBE COMPLETION RECORD

DRILLING INFORMATION

DRILLING BEGAN:
DATE 05-31-02 TIME 11:15
WELL INSTALLATION BEGAN:
DATE 05-31-02 TIME
WELL COMPLETION FINISHED:
DATE 05-31-02 TIME
DRILLING CO. GREGG Drilling
DRILLER
LICENSE
DRILL RIG
DRILLING METHOD:
☒ HOLLOW STEM AUGER
❑ AIR ROTARY
❑
DIAMETER OF AUGERS:
ID OD 5.5 inches

BENTONITE SEAL

AMOUNT CALCULATED
AMOUNT USED 50 pounds
❑ PELLETS, SIZE
☒ CHIPS, SIZE medium
❑
PRODUCT
MFG. BY
METHOD INSTALLED:
☒ POURED ❑ TREMIE
AMOUNT OF WATER USED

FILTER PACK

AMOUNT CALCULATED
AMOUNT USED 75 pounds
❑ SAND, SIZE #2/16
❑ FORMATION COLLAPSE:
FROM 5.0 ft bgs TO 10.5 ft bgs
PRODUCT
MFG. BY
METHOD INSTALLED:
☒ POURED ❑ TREMIE

SURFACE COMPLETION

☒FLUSH MOUNT
❑ABOVE GROUND W/BUMPER POST
☐CONCRETE ☒ ASPHALT

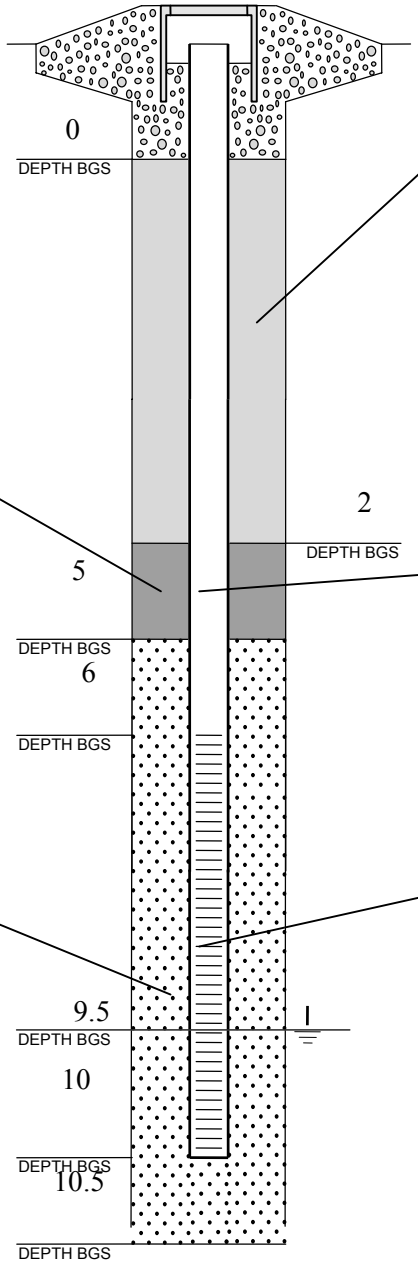

MONITORING WELL

MONITORING WELL NO. GMP17
PROJECT Parcel E Nonstd Data Gaps Inv
SITE IR-01/21
BOREHOLE NO.
WELL PERMIT NO. Not applicable
TOC TO BOTTOM OF WELL

ANNULAR SEAL

AMOUNT CALCULATED
AMOUNT USED 50 lbs
☒ GROUT FORMULA
PORTLAND CEMENT 95%
BENTONITE 5%
WATER
❑ PREPARED MIX
PRODUCT
MFG. BY
METHOD INSTALLED:
☒ POURED ❑ TREMIE

CASING

☒ SCHEDULE 40 PVC
❑
PRODUCT
MFG. BY
CASING DIAMETER:
ID 0.75 inches OD
LENGTH OF CASING 10.5 ft bgs

WELL SCREEN

☒ SCHEDULE 40 PVC
❑
PRODUCT
MFG. BY
CASING DIAMETER:
ID 0.75 inches OD
SLOT SIZE 0.010
LENGTH OF SCREEN 4.0 ft

TETRATECH EM INC

GAS MONITORING PROBE COMPLETION RECORD

DRILLING INFORMATION

DRILLING BEGAN:
DATE 05-31-02 TIME 11:45
WELL INSTALLATION BEGAN:
DATE 05-31-02 TIME
WELL COMPLETION FINISHED:
DATE 05-31-02 TIME
DRILLING CO. GREGG Drilling
DRILLER
LICENSE
DRILL RIG
DRILLING METHOD:
☒ HOLLOW STEM AUGER
❑ AIR ROTARY
❑
DIAMETER OF AUGERS:
ID OD 5.5 inches

BENTONITE SEAL

AMOUNT CALCULATED
AMOUNT USED 50 pounds
❑ PELLETS, SIZE
☒ CHIPS, SIZE Not applicable
❑
PRODUCT
MFG. BY
METHOD INSTALLED:
☒ POURED ❑ TREMIE
AMOUNT OF WATER

FILTER PACK

AMOUNT CALCULATED
AMOUNT USED 100 pounds
❑ SAND, SIZE #2/16
❑ FORMATION COLLAPSE:
FROM 5.0 ft bgs TO 13.0 ft bgs
PRODUCT
MFG. BY
METHOD INSTALLED:
☒ POURED ❑ TREMIE

SURFACE COMPLETION

☒FLUSH MOUNT
❑ABOVE GROUND W/BUMPER POST
☐CONCRETE ☒ ASPHALT

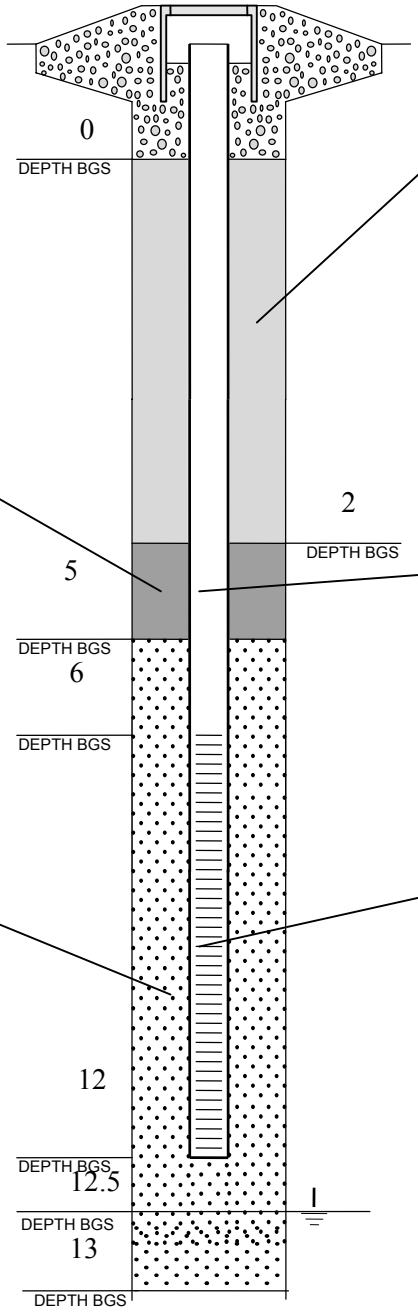

MONITORING WELL

MONITORING WELL NO. GMP18
PROJECT Parcel E Nonstd Data Gaps Inv
SITE IR-01/21
BOREHOLE NO.
WELL PERMIT NO. Not applicable
TOC TO BOTTOM OF WELL

ANNULAR SEAL

AMOUNT CALCULATED
AMOUNT USED
☒ GROUT FORMULA
PORTLAND CEMENT 95%
BENTONITE 5%
WATER
❑ PREPARED MIX
PRODUCT
MFG. BY
METHOD INSTALLED:
☒ POURED ❑ TREMIE

CASING

☒ SCHEDULE 40 PVC
❑
PRODUCT
MFG. BY
CASING DIAMETER:
ID 0.75 inches OD
LENGTH OF CASING 13.0 ft bgs

WELL SCREEN

☒ SCHEDULE 40 PVC
❑
PRODUCT
MFG. BY
CASING DIAMETER:
ID 0.75 inches OD
SLOT SIZE 0.010
LENGTH OF SCREEN 6..0 ft

TETRATECH EM INC

GAS MONITORING PROBE COMPLETION RECORD

DRILLING INFORMATION

DRILLING BEGAN:
DATE 05-31-02 TIME 12:30
WELL INSTALLATION BEGAN:
DATE 05-31-02 TIME
WELL COMPLETION FINISHED:
DATE 05-31-02 TIME
DRILLING CO. GREGG Drilling
DRILLER
LICENSE
DRILL RIG
DRILLING METHOD:
☒ HOLLOW STEM AUGER
❑ AIR ROTARY
❑
DIAMETER OF AUGERS:
ID OD 5.5 inches

BENTONITE SEAL

AMOUNT CALCULATED
AMOUNT USED 30 lbs.
❑ PELLETS, SIZE
☒ CHIPS, SIZE Not applicable
❑
PRODUCT
MFG. BY
METHOD INSTALLED:
☒ POURED ❑ TREMIE
AMOUNT OF WATER USED

FILTER PACK

AMOUNT CALCULATED
AMOUNT USED 30 pounds
❑ SAND, SIZE #2/16
❑ FORMATION COLLAPSE:
FROM 4.0 ft bgs TO 4.5 ft bgs
PRODUCT
MFG. BY
METHOD INSTALLED:
☒ POURED ❑ TREMIE

SURFACE COMPLETION

☒FLUSH MOUNT
❑ABOVE GROUND W/BUMPER POST
☐CONCRETE ☒ ASPHALT

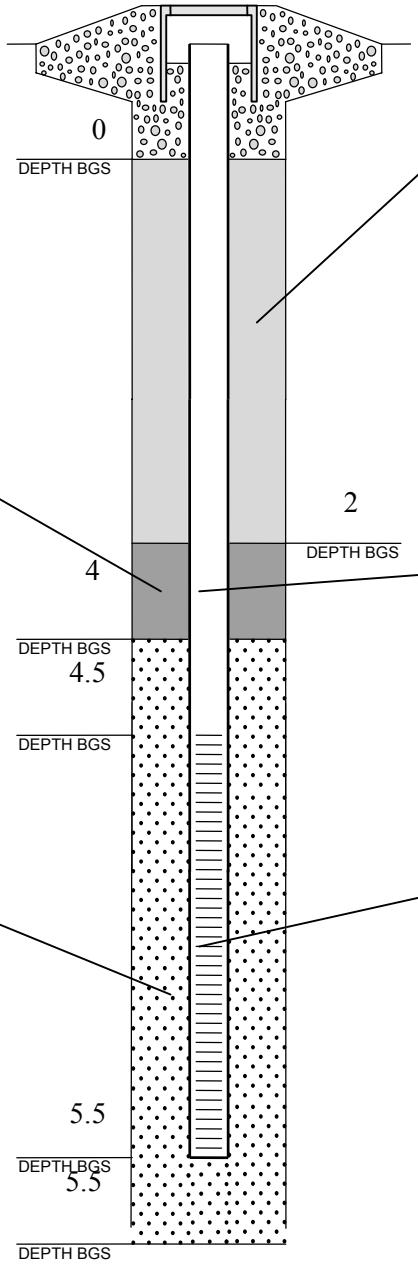

MONITORING WELL

MONITORING WELL NO. GMP19
PROJECT Parcel E Nonstd Data Gaps Inv
SITE IR-01/21
BOREHOLE NO.
WELL PERMIT NO. Not applicable
TOC TO BOTTOM OF WELL

ANNULAR SEAL

AMOUNT CALCULATED
AMOUNT USED
☒ GROUT FORMULA
PORTLAND CEMENT 95%
BENTONITE 5%
WATER
❑ PREPARED MIX
PRODUCT
MFG. BY
METHOD INSTALLED:
☒ POURED ❑ TREMIE

CASING

☒ SCHEDULE 40 PVC
❑
PRODUCT
MFG. BY
CASING DIAMETER:
ID 0.75 inches OD
LENGTH OF CASING 5.5 ft bgs

WELL SCREEN

☒ SCHEDULE 40 PVC
❑
PRODUCT
MFG. BY
CASING DIAMETER:
ID 0.75 inches OD
SLOT SIZE 0.010
LENGTH OF SCREEN 1 ft

TETRATECH EM INC

GAS MONITORING PROBE COMPLETION RECORD

DRILLING INFORMATION

DRILLING BEGAN:
DATE 06-07-02 TIME 11:20
WELL INSTALLATION BEGAN:
DATE 06-07-02 TIME
WELL COMPLETION FINISHED:
DATE 06-07-02 TIME
DRILLING CO. GREGG Drilling
DRILLER
LICENSE
DRILL RIG
DRILLING METHOD:
☒ HOLLOW STEM AUGER
❑ AIR ROTARY
❑
DIAMETER OF AUGERS:
ID OD 5.5 inches

BENTONITE SEAL

AMOUNT CALCULATED
AMOUNT USED no weight given
❑ PELLETS, SIZE
☒ CHIPS, SIZE medium
❑
PRODUCT
MFG. BY
METHOD INSTALLED:
☒ POURED ❑ TREMIE
AMOUNT OF WATER USED

FILTER PACK

AMOUNT CALCULATED
AMOUNT USED no weight given
❑ SAND, SIZE #2/16
❑ FORMATION COLLAPSE:
FROM 3.0 ft bgs TO 5.0 ft bgs
PRODUCT
MFG. BY
METHOD INSTALLED:
☒ POURED ❑ TREMIE

SURFACE COMPLETION

☐FLUSH MOUNT
☒ABOVE GROUND
☐CONCRETE ❑ ASPHALT

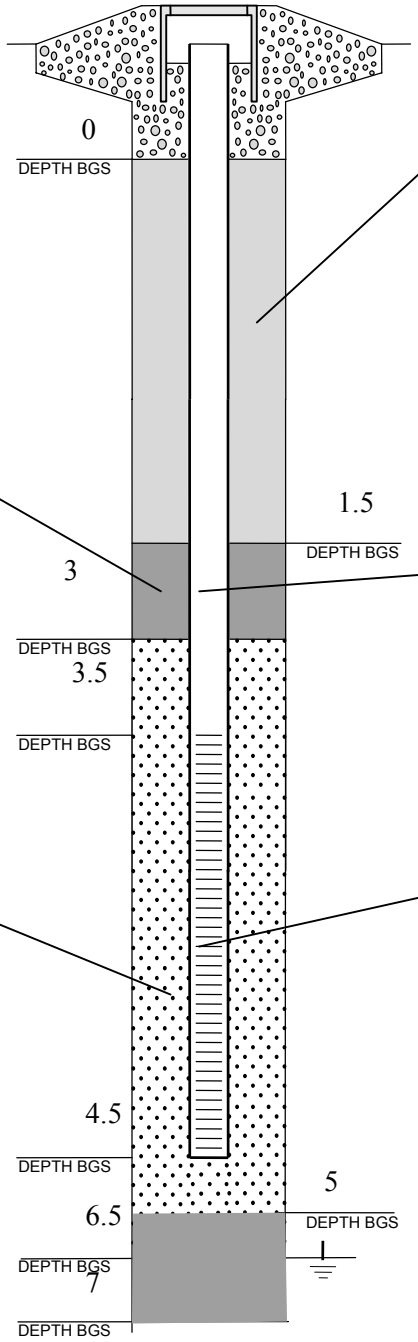

MONITORING WELL

MONITORING WELL NO. GMP20
PROJECT Parcel E Nonstd Data Gaps Inv
SITE IR-01/21
BOREHOLE NO.
WELL PERMIT NO. Not applicable
TOC TO BOTTOM OF WELL

ANNULAR SEAL

AMOUNT CALCULATED
AMOUNT USED no weight given
☒ GROUT FORMULA
PORTLAND CEMENT 95%
BENTONITE 5%
WATER
❑ PREPARED MIX
PRODUCT
MFG. BY
METHOD INSTALLED:
☒ POURED ❑ TREMIE

CASING

☒ SCHEDULE 40 PVC
❑
PRODUCT
MFG. BY
CASING DIAMETER:
ID 0.75 inches OD
LENGTH OF CASING 7.0 ft bgs

WELL SCREEN

☒ SCHEDULE 40 PVC
❑
PRODUCT
MFG. BY
CASING DIAMETER:
ID 0.75 inches OD
SLOT SIZE 0.010
LENGTH OF SCREEN 1.0 ft

TETRATECH EM INC

GAS MONITORING PROBE COMPLETION RECORD

DRILLING INFORMATION

DRILLING BEGAN:
DATE 06-07-02 TIME 11:20
WELL INSTALLATION BEGAN:
DATE 06-07-02 TIME
WELL COMPLETION FINISHED:
DATE 06-07-02 TIME
DRILLING CO. GREGG Drilling
DRILLER
LICENSE
DRILL RIG
DRILLING METHOD:
☒ HOLLOW STEM AUGER
❑ AIR ROTARY
❑
DIAMETER OF AUGERS:
ID OD 5.5 inches

BENTONITE SEAL

AMOUNT CALCULATED
AMOUNT USED no weight given
❑ PELLETS, SIZE
☒ CHIPS, SIZE medium
❑
PRODUCT
MFG. BY
METHOD INSTALLED:
☒ POURED ❑ TREMIE
AMOUNT OF WATER USED

FILTER PACK

AMOUNT CALCULATED
AMOUNT USED no weight given
❑ SAND, SIZE #2/16
❑ FORMATION COLLAPSE:
FROM 3.0 ft bgs TO 5.0 ft bgs
PRODUCT
MFG. BY
METHOD INSTALLED:
☒ POURED ❑ TREMIE

SURFACE COMPLETION

☐FLUSH MOUNT
☒ABOVE GROUND
☐CONCRETE ❑ ASPHALT

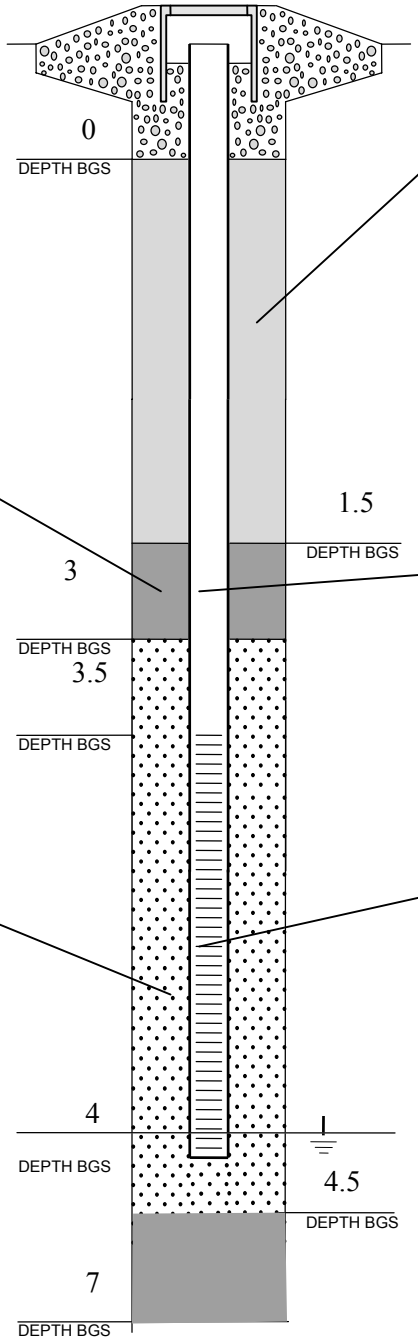

MONITORING WELL

MONITORING WELL NO. GMP21
PROJECT Parcel E Nonstd Data Gaps Inv
SITE IR-01/21
BOREHOLE NO.
WELL PERMIT NO. Not applicable
TOC TO BOTTOM OF WELL

ANNULAR SEAL

AMOUNT CALCULATED
AMOUNT USED no weight given
☒ GROUT FORMULA
PORTLAND CEMENT 95%
BENTONITE 5%
WATER
❑ PREPARED MIX
PRODUCT
MFG. BY
METHOD INSTALLED:
☒ POURED ❑ TREMIE

CASING

☒ SCHEDULE 40 PVC
❑
PRODUCT
MFG. BY
CASING DIAMETER:
ID 0.75 inches OD
LENGTH OF CASING 7.0 ft bgs

WELL SCREEN

☒ SCHEDULE 40 PVC
❑
PRODUCT
MFG. BY
CASING DIAMETER:
ID 0.75 inches OD
SLOT SIZE 0.010
LENGTH OF SCREEN 1.0 ft

TETRATECH EM INC

GAS MONITORING PROBE COMPLETION RECORD

DRILLING INFORMATION

DRILLING BEGAN:
DATE 09-11-02 TIME 10:20
WELL INSTALLATION BEGAN:
DATE 09-11-02 TIME
WELL COMPLETION FINISHED:
DATE 09-11-02 TIME
DRILLING CO. GREGG Drilling
DRILLER
LICENSE
DRILL RIG
DRILLING METHOD:
☒ HOLLOW STEM AUGER
❑ AIR ROTARY
❑
DIAMETER OF AUGERS:
ID OD 5.5 inches

BENTONITE SEAL

AMOUNT CALCULATED
AMOUNT USED 25 lbs.
❑ PELLETS, SIZE
☒ CHIPS, SIZE
❑
PRODUCT
MFG. BY
METHOD INSTALLED:
☒ POURED ❑ TREMIE
AMOUNT OF WATER USED

FILTER PACK

AMOUNT CALCULATED
AMOUNT USED
❑ SAND, SIZE
❑ FORMATION COLLAPSE:
FROM 5.0 ft bgs TO 14.0 ft bgs
PRODUCT
MFG. BY
METHOD INSTALLED:
☒ POURED ❑ TREMIE

SURFACE COMPLETION

❑FLUSH MOUNT
☒ABOVE GROUND W/BUMPER POST
☐CONCRETE ❑ ASPHALT

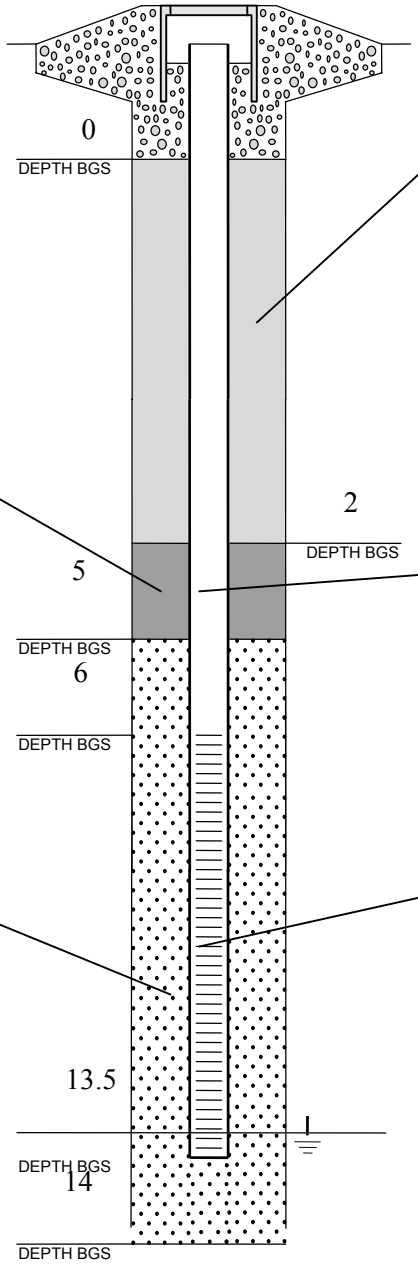

MONITORING WELL

MONITORING WELL NO. GMP22
PROJECT Parcel E Nonstd Data Gaps Inv
SITE IR-01/21
BOREHOLE NO.
WELL PERMIT NO. Not applicable
TOC TO BOTTOM OF WELL

ANNULAR SEAL

AMOUNT CALCULATED
AMOUNT USED 160 lbs.
☒ GROUT FORMULA
PORTLAND CEMENT 95%
BENTONITE 5%
WATER
❑ PREPARED MIX
PRODUCT
MFG. BY
METHOD INSTALLED:
☒ POURED ❑ TREMIE

CASING

☒ SCHEDULE 40 PVC
❑
PRODUCT
MFG. BY
CASING DIAMETER:
ID 0.75 inches OD
LENGTH OF CASING 14.0 ft bgs

WELL SCREEN

☒ SCHEDULE 40 PVC
❑
PRODUCT
MFG. BY
CASING DIAMETER:
ID 0.75 inches OD
SLOT SIZE 0.010
LENGTH OF SCREEN 7.5 ft

TETRATECH EM INC

GAS MONITORING PROBE COMPLETION RECORD

DRILLING INFORMATION

DRILLING BEGAN:
DATE 09-11-02 TIME 11:05
WELL INSTALLATION BEGAN:
DATE 09-11-02 TIME
WELL COMPLETION FINISHED:
DATE 09-11-02 TIME
DRILLING CO. GREGG Drilling
DRILLER
LICENSE
DRILL RIG
DRILLING METHOD:
☒ HOLLOW STEM AUGER
❑ AIR ROTARY
❑
DIAMETER OF AUGERS:
ID OD 5.5 inches

BENTONITE SEAL

AMOUNT CALCULATED
AMOUNT USED
❑ PELLETS, SIZE
☒ CHIPS, SIZE medium
❑
PRODUCT
MFG. BY
METHOD INSTALLED:
☒ POURED ❑ TREMIE
AMOUNT OF WATER USED 5 gallons

FILTER PACK

AMOUNT CALCULATED
AMOUNT USED 200 pounds
❑ SAND, SIZE
❑ FORMATION COLLAPSE:
FROM 5.0 ft bgs TO 14.0 ft bgs
PRODUCT
MFG. BY
METHOD INSTALLED:
☒ POURED ❑ TREMIE

SURFACE COMPLETION

☒FLUSH MOUNT
❑ABOVE GROUND W/BUMPER POST
☒CONCRETE ❑ ASPHALT

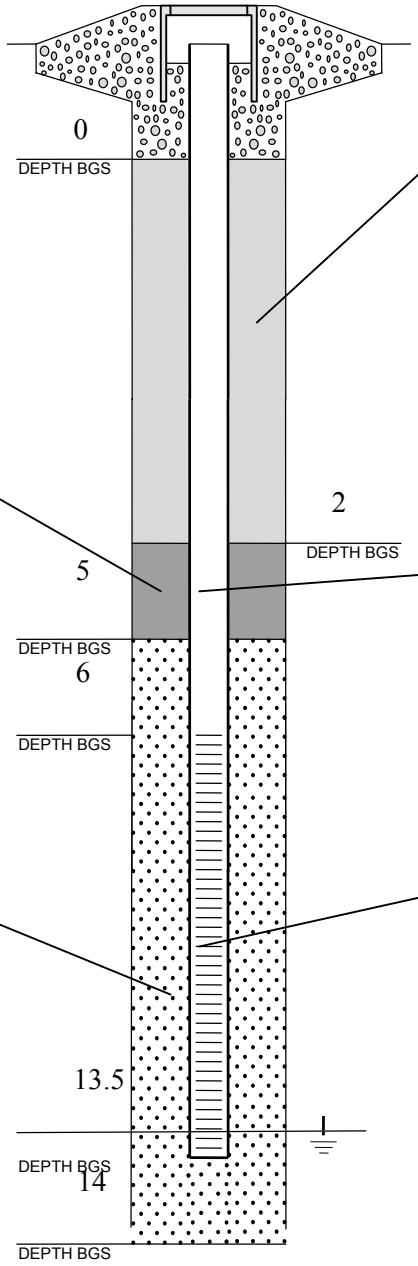

MONITORING WELL

MONITORING WELL NO. GMP23
PROJECT Parcel E Nonstd Data Gaps Inv
SITE IR-01/21
BOREHOLE NO.
WELL PERMIT NO. Not applicable
TOC TO BOTTOM OF WELL

ANNULAR SEAL

AMOUNT CALCULATED
AMOUNT USED 160 lbs.
☒ GROUT FORMULA
PORTLAND CEMENT 95%
BENTONITE 5%
WATER
❑ PREPARED MIX
PRODUCT
MFG. BY
METHOD INSTALLED:
☒ POURED ❑ TREMIE

CASING

☒ SCHEDULE 40 PVC
❑
PRODUCT
MFG. BY
CASING DIAMETER:
ID 0.75 inches OD
LENGTH OF CASING 14.0 ft bgs

WELL SCREEN

☒ SCHEDULE 40 PVC
❑
PRODUCT
MFG. BY
CASING DIAMETER:
ID 0.75 inches OD
SLOT SIZE 0.010
LENGTH OF SCREEN 7.5 ft

TETRATECH EM INC

GAS MONITORING PROBE COMPLETION RECORD

DRILLING INFORMATION

DRILLING BEGAN:
DATE 09-11-02 TIME 12:05
WELL INSTALLATION BEGAN:
DATE 09-11-02 TIME
WELL COMPLETION FINISHED:
DATE 09-11-02 TIME
DRILLING CO. GREGG Drilling
DRILLER
LICENSE
DRILL RIG
DRILLING METHOD:
☒ HOLLOW STEM AUGER
❑ AIR ROTARY
❑
DIAMETER OF AUGERS:
ID OD 5.5 inches

BENTONITE SEAL

AMOUNT CALCULATED
AMOUNT USED
❑ PELLETS, SIZE
☒ CHIPS, SIZE
❑
PRODUCT
MFG. BY
METHOD INSTALLED:
☒ POURED ❑ TREMIE
AMOUNT OF WATER USED

FILTER PACK

AMOUNT CALCULATED
AMOUNT USED 150 pounds
❑ SAND, SIZE
❑ FORMATION COLLAPSE:
FROM 5.0 ft bgs TO 13.5 ft bgs
PRODUCT
MFG. BY
METHOD INSTALLED:
☒ POURED ❑ TREMIE

SURFACE COMPLETION

☒FLUSH MOUNT
❑ABOVE GROUND W/BUMPER POST
❑CONCRETE ❑ ASPHALT

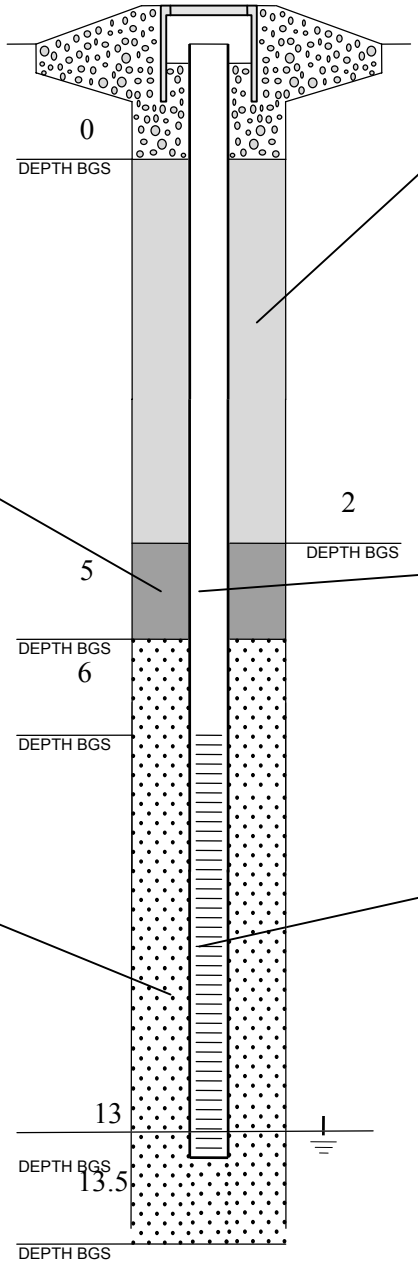

MONITORING WELL

MONITORING WELL NO. GMP24
PROJECT Parcel E Nonstd Data Gaps Inv
SITE IR-01/21
BOREHOLE NO.
WELL PERMIT NO. Not applicable
TOC TO BOTTOM OF WELL

ANNULAR SEAL

AMOUNT CALCULATED Not applicable
AMOUNT USED
☒ GROUT FORMULA
PORTLAND CEMENT 95%
BENTONITE 5%
WATER
❑ PREPARED MIX
PRODUCT
MFG. BY
METHOD INSTALLED:
☒ POURED ❑ TREMIE

CASING

☒ SCHEDULE 40 PVC
❑
PRODUCT
MFG. BY
CASING DIAMETER:
ID 0.75 inches OD
LENGTH OF CASING 13.5 ft bgs

WELL SCREEN

☒ SCHEDULE 40 PVC
❑
PRODUCT
MFG. BY
CASING DIAMETER:
ID 0.75 inches OD
SLOT SIZE 0.010
LENGTH OF SCREEN 7 ft

TETRATECH EM INC

GAS MONITORING PROBE COMPLETION RECORD

DRILLING INFORMATION

DRILLING BEGAN:
DATE 09-11-02 TIME 13:20
WELL INSTALLATION BEGAN:
DATE 09-11-02 TIME
WELL COMPLETION FINISHED:
DATE 09-11-02 TIME
DRILLING CO. GREGG Drilling
DRILLER
LICENSE
DRILL RIG
DRILLING METHOD:
☒ HOLLOW STEM AUGER
❑ AIR ROTARY
❑
DIAMETER OF AUGERS:
ID OD 5.5 inches

BENTONITE SEAL

AMOUNT CALCULATED
AMOUNT USED
❑ PELLETS, SIZE
☒ CHIPS, SIZE medium
❑
PRODUCT
MFG. BY
METHOD INSTALLED:
☒ POURED ❑ TREMIE
AMOUNT OF WATER USED 5 gallons

FILTER PACK

AMOUNT CALCULATED
AMOUNT USED
❑ SAND, SIZE
❑ FORMATION COLLAPSE:
FROM 5.0 ft bgs TO 12.0 ft bgs
PRODUCT
MFG. BY
METHOD INSTALLED:
☒ POURED ❑ TREMIE

SURFACE COMPLETION

☒FLUSH MOUNT
❑ABOVE GROUND W/BUMPER POST
❑CONCRETE ❑ ASPHALT

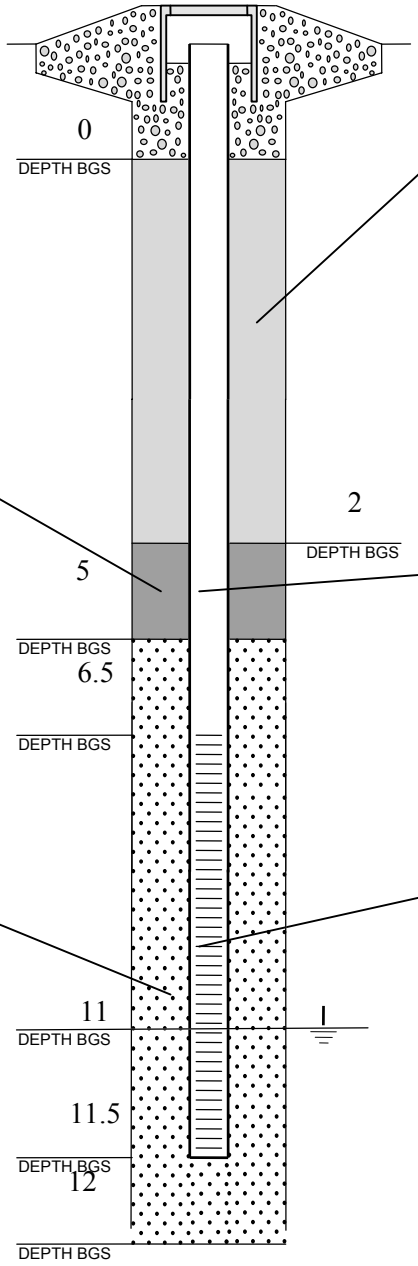

MONITORING WELL

MONITORING WELL NO. GMP25
PROJECT Parcel E Nonstd Data Gaps Inv
SITE IR-01/21
BOREHOLE NO.
WELL PERMIT NO. Not applicable
TOC TO BOTTOM OF WELL

ANNULAR SEAL

AMOUNT CALCULATED
AMOUNT USED 160 lbs.
☒ GROUT FORMULA
PORTLAND CEMENT 95%
BENTONITE 5%
WATER
❑ PREPARED MIX
PRODUCT
MFG. BY
METHOD INSTALLED:
☒ POURED ❑ TREMIE

CASING

☒ SCHEDULE 40 PVC
❑
PRODUCT
MFG. BY
CASING DIAMETER:
ID 0.75 inches OD
LENGTH OF CASING 12.0 ft bgs

WELL SCREEN

☒ SCHEDULE 40 PVC
❑
PRODUCT
MFG. BY
CASING DIAMETER:
ID 0.75 inches OD
SLOT SIZE 0.010
LENGTH OF SCREEN 5.0 ft

TETRATECH EM INC

GAS MONITORING PROBE COMPLETION RECORD

DRILLING INFORMATION

DRILLING BEGAN:
DATE 09-11-02 TIME 14:10
WELL INSTALLATION BEGAN:
DATE 09-11-02 TIME
WELL COMPLETION FINISHED:
DATE 09-11-02 TIME
DRILLING CO. GREGG Drilling
DRILLER
LICENSE
DRILL RIG
DRILLING METHOD:
☒ HOLLOW STEM AUGER
❑ AIR ROTARY
❑
DIAMETER OF AUGERS:
ID OD 5.5 inches

BENTONITE SEAL

AMOUNT CALCULATED
AMOUNT USED
❑ PELLETS, SIZE
☒ CHIPS, SIZE
❑
PRODUCT
MFG. BY
METHOD INSTALLED:
☒ POURED ❑ TREMIE
AMOUNT OF WATER USED 5 gallons

FILTER PACK

AMOUNT CALCULATED
AMOUNT USED
❑ SAND, SIZE
❑ FORMATION COLLAPSE:
FROM 5.0 ft bgs TO 12.0 ft bgs
PRODUCT
MFG. BY
METHOD INSTALLED:
☒ POURED ❑ TREMIE

SURFACE COMPLETION

☒FLUSH MOUNT
❑ABOVE GROUND W/BUMPER POST
❑CONCRETE ❑ ASPHALT

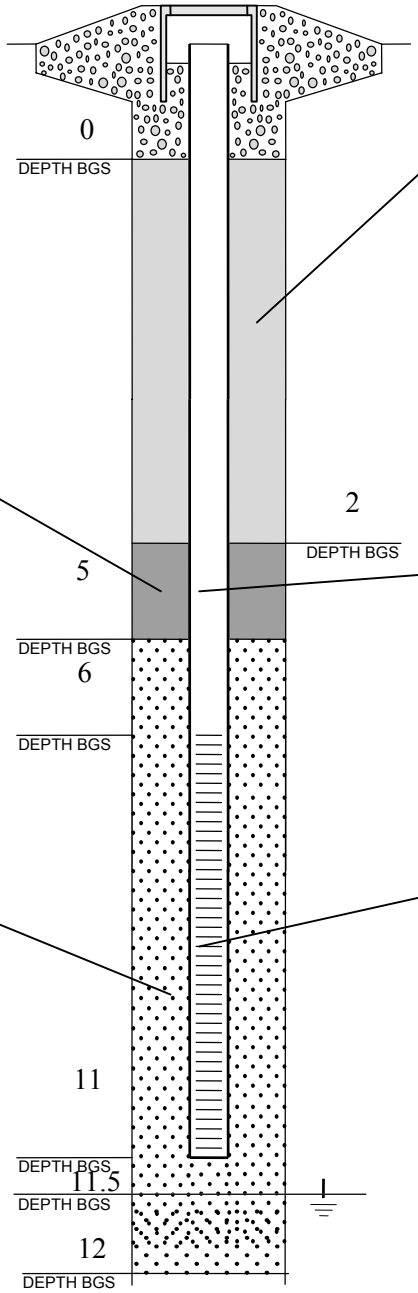

MONITORING WELL

MONITORING WELL NO. GMP26
PROJECT Parcel E Nonstd Data Gaps Inv
SITE IR-01/21
BOREHOLE NO.
WELL PERMIT NO. Not applicable
TOC TO BOTTOM OF WELL

ANNULAR SEAL

AMOUNT CALCULATED
AMOUNT USED 160 lbs.
☒ GROUT FORMULA
PORTLAND CEMENT 95%
BENTONITE 5%
WATER
❑ PREPARED MIX
PRODUCT
MFG. BY
METHOD INSTALLED:
☒ POURED ❑ TREMIE

CASING

☒ SCHEDULE 40 PVC
❑
PRODUCT
MFG. BY
CASING DIAMETER:
ID 0.75 inches OD
LENGTH OF CASING 12.0 ft bgs

WELL SCREEN

☒ SCHEDULE 40 PVC
❑
PRODUCT
MFG. BY
CASING DIAMETER:
ID 0.75 inches OD
SLOT SIZE 0.010
LENGTH OF SCREEN 5.0 ft

APPENDIX C
QUALITY CONTROL SUMMARY REPORT

CONTENTS

ACRONYMS AND ABBREVIATIONS ..... C-ii

1.0 INTRODUCTION C-1

2.0 DATA VALIDATION METHODOLOGY C-2

3.0 DATA REVIEW C-5

3.1 VOLATILE ORGANIC COMPOUNDS C-5
3.2 TOTAL NONMETHANE VOLATILE ORGANIC CARBONS C-6
3.3 CARBON DIOXIDE, CARBON MONOXIDE, METHANE, NITROGEN, AND OXYGEN C-6

4.0 PRECISION, ACCURACY, REPRESENTATIVENESS, COMPLETENESS, AND COMPARABILITY EVALUATION SUMMARY C-7

4.1 PRECISION C-7
4.2 ACCURACY C-8
4.3 REPRESENTATIVENESS C-9
4.4 COMPLETENESS C-9
4.5 COMPARABILITY C-10

5.0 CONCLUSIONS C-10

6.0 REFERENCES C-11

Attachment

C1 Data Validation Reports (provided on compact disc only)

C2 Validated Analytical Data (provided on compact disc only)

Tables

C-1 Data Validation Qualifiers and Comment Codes

C-2 Data Validation Criteria

C-3 Sample Container, Holding Time, and Preservative Requirements

ACRONYMS AND ABBREVIATIONS

3J	3J Environmental Services
AAC	Atmospheric Analysis & Consulting, Inc.
CLP	Contract Laboratory Program
CRQL	Contract-required quantitation limit
DQO	Data quality objective
EPA	U.S. Environmental Protection Agency
FSP/QAPP	Field sampling plan and quality assurance project plan
ICP	Inductively coupled plasma
LCS	Laboratory control sample
LDC	Laboratory Data Consultants
MD	Matrix duplicate
MDL	Method detection limit
MS	Matrix spike
MSD	Matrix spike duplicate
Navy	U.S. Department of the Navy
PARCC	Precision, accuracy, representativeness, completeness, and comparability
QA	Quality assurance
QC	Quality control
QCSR	Quality control summary report
RPD	Relative percent difference
SDG	Sample delivery group
SOW	Statement of work
Tetra Tech	Tetra Tech EM Inc.
TO	Toxic Organics
VOC	Volatile organic compound

1.0 INTRODUCTION

Tetra Tech EM Inc. (Tetra Tech) conducted sampling and analysis activities for the U.S. Department of the Navy (Navy) under Indefinite Quantity Contract for Architectural-Engineering Services to Provide CERCLA/RCRA/UST Studies, Delivery Order No. 003. The sampling event addressed in this quality control summary report (QCSR) was designed to fulfill data quality objectives (DQO) in support of the nonstandard data gaps investigation for Parcel E of Hunters Point Shipyard in San Francisco, California.

The DQO process is a series of planning steps designed to ensure that the type, quantity, and quality of environmental data used in decision-making are appropriate for the intended application. DQOs were developed in accordance with U.S. Environmental Protection Agency (EPA) guidance for the DQO process (EPA 2000b). The DQOs included collection and analysis of soil-gas samples from temporary soil-gas probes and gas monitoring probes located at the periphery of the Industrial Landfill at Parcel E (herein referred to as the landfill) as well as other selected locations. The DQOs were developed to adequately delineate the lateral extent of migration of landfill gas at Parcel E, and to characterize the chemical composition of the landfill gas. Details of the DQOs and sampling design, including the proposed sampling locations, are presented in the draft final Parcel E field sampling plan and quality assurance project plan (FSP/QAPP) for the nonstandard data gaps investigation (Tetra Tech 2002a).

This QCSR summarizes the comprehensive results of the chemical quality control (QC) data gathered during the landfill gas investigation. Results were used to evaluate the chemical composition of landfill gas, ambient air at the surface of the landfill, and air from within buildings and subterranean structures near the landfill. Additionally, this appendix provides a general overview of analytical data quality for this sampling event.

This appendix consists of six sections. Section 1.0 describes the document scope and organization. Section 2.0 discusses the data validation methodology. Section 3.0 summarizes the results of the cursory and full data validation and discusses the general QC issues. Section 4.0 discusses the parameters of precision, accuracy, representativeness, completeness, and comparability (PARCC), which are used to evaluate acceptability of the data during the data validation process. Section 5.0 presents a conclusion of findings regarding data acceptability for the landfill gas sampling event. Section 6.0 lists the references used to prepare this QCSR.

Tables used to prepare the QCSR are presented after Section 6.0. Attachment C1 contains the validation reports for each sampling delivery group (SDG) received from the laboratory. Attachment C2 contains the validated analytical data received from the laboratory. Attachments C1 and C2 are provided on compact disc only.

2.0 DATA VALIDATION METHODOLOGY

Data validation is the systematic process for reviewing and qualifying data against a set of criteria to ensure that the chemical data are adequate for the intended use. The data validation process assesses acceptability of the data by evaluating the critical indicator parameters of PARCC. The laboratory analytical data were validated according to the procedures outlined in the following documents:

- "EPA Contract Laboratory Program [CLP] National Functional Guidelines for Organic Data Review" (EPA 1999b)
- "Comprehensive Long-term Environmental Action Navy II Analytical Services Statement of Work" (Tetra Tech 2000)
- "Data Validation Guidelines" (Tetra Tech 2001)

Data validation occurred in the following two stages: (1) a cursory review of analytical reports and quality assurance (QA) and QC information for 80 percent of the chemical data and (2) full review of analytical reports, QA/QC information, and associated raw data for 20 percent of the chemical data (Tetra Tech 2002a). Of all the samples that were submitted for analysis, 39, or about 22 percent, were selected for full validation.

QA/QC criteria were reviewed in accordance with EPA guidance (EPA 1999b), the FSP/QAPP (Tetra Tech 2002a), and the data validation guidelines (Tetra Tech 2001). The cursory review for organic and inorganic methods consisted of evaluating the following requirements, as applicable:

- Holding times
- Initial and continuing calibrations
- Field and laboratory blank results
- Laboratory control sample (LCS) spike results
- Matrix spike (MS) and matrix spike duplicate (MSD) results
- Field and laboratory matrix duplicate results
- Surrogate recoveries
- Internal standard performance
- Inductively coupled plasma (ICP) serial dilutions

In addition to QA/QC criteria described above, the following criteria were reviewed for full validation:

- Instrument performance check samples
- Cleanup performance check samples
- ICP interference check samples
- Target analyte identification
- Tentatively identified compound identification
- Analyte quantitation
- Detection and quantitation limit verification

Section 3.0 presents the results of both the cursory and the full validation review.

At each stage of the validation, qualifiers were assigned to the results in the electronic database in accordance with EPA guidelines (EPA 1999b), the FSP/QAPP (Tetra Tech 2002a), and the associated analytical methods. Table C-1 defines data validation qualifiers and comment codes that are applied to the data set. Table C-2 summarizes the data validation criteria.

The overall objective of data validation is to ensure that the quality of the chemical data set is adequate for the intended use, as defined by the FSP/QAPP (Tetra Tech 2002a) and in accordance with the PARCC parameters for QAPPs (EPA 1998a, 1998b). PARCC parameters were assessed by completing the following tasks:

- Reviewing precision and accuracy of laboratory QC data
- Reviewing precision and accuracy of field QC data
- Reviewing the overall analytical process, including holding time, calibration, analytical or matrix performance, and analyte identification and quantitation
- Assigning qualifiers to affected data when QA/QC criteria were not achieved
- Reviewing and summarizing implications of the frequency and severity of qualifiers in the validated data

From March 25 to November 13, 2002, the Navy collected 144 gas samples, with 15 field duplicates and 16 field blanks. All 175 samples were submitted to the laboratory and analyzed for volatile organic compounds (VOC), and 161 samples were analyzed for total nonmethane VOCs and carbon dioxide, carbon monoxide, methane, nitrogen, and oxygen.

The chemical analytical program for the landfill gas characterization included the following analyses and methods:

- VOCs by EPA method Toxic Organics (TO)-14A (EPA 1999a)
- Nonmethane VOCs by EPA method 25C (EPA 2000a)
- Oxygen, nitrogen, methane, carbon dioxide, and carbon monoxide by EPA method 3C (EPA 1996)

Table C-3 lists sample container, holding time, and preservative requirements. Samples collected for the landfill gas investigation were submitted to Atmospheric Analysis & Consulting, Inc. (AAC), a California State certified laboratory located in Ventura, California. AAC analyzed samples in batches, or SDGs, that contained between 1 and 19 samples each. SDGs are generally limited to 20 samples or less. AAC submitted the analytical results to the Navy based on SDGs. The laboratory followed analytical methods specified in the FSP/QAPP (Tetra Tech 2002a) and the analytical statement of work (SOW) for the nonstandard data gaps investigation (Tetra Tech 2002b). The laboratory provided EPA CLP-like deliverable packages for all the data for this project.

Ethix in Modesto, California, 3J Environmental Service (3J) in Fremont, California, and Laboratory Data Consultants (LDC) in Carlsbad, California validated analytical data in accordance with EPA guidance (EPA 1999b) and the SOW (Tetra Tech 2000), and data validation guidelines (Tetra Tech 2001). Ethix, 3J, and LDC validated the data using the following information provided by the laboratory:

- Raw data
- Instrument calibration information
- Instrument printouts for samples and standards
- Instrument run logs
- Benchsheets
- Standards preparation information
- QC sample results

Ethix, 3J, and LDC each validated a separate portion of the complete set of analytical data. Section 3.0 details the results of the cursory and full data validations.

3.0 DATA REVIEW

Data validity is discussed according to analytical methodology. The discussion is intended to provide a general summary; specific details may be found in the data validation narratives (Attachment C1). Sections 3.1, 3.2, and 3.3 discuss the cursory and full review components and the results of each specific assessment.

3.1 VOLATILE ORGANIC COMPOUNDS

Analyses for VOCs were performed on 175 air samples, and the 30-day holding time requirements were met for EPA method TO-14A (Table C-3).

Initial calibrations were performed, as required, and met QC criteria. Continuing calibrations were performed, as required, and met QC criteria with the following exceptions: 9 results for 2-hexanone and 10 results for hexachlorobutadiene were qualified as estimated or estimated nondetected (J7/UJ7) because continuing calibration standards did not meet QC limits.

LCSs were performed at appropriate frequencies for all samples, and all percent recoveries met QC criteria.

The frequency of analysis of MS and MSD samples met the criterion of 5 percent of the samples, as specified in the FSP/QAPP (Tetra Tech 2002a). Surrogates were added to every sample. Of the 11,410 sample results, 1,481 (13 percent) were qualified as estimated or estimated nondetected (J3/UJ3) because MS recovery or surrogate recovery did not meet QC limits. Of the 175 samples analyzed, 64 were affected by surrogate or MS recovery that did not meet QC limits.

The frequency of analysis of matrix duplicate (MD) samples met the criterion of 5 percent of the samples, as specified in the FSP/QAPP (Tetra Tech 2002a). No sample results were qualified based on MD relative percent differences (RPD).

Method blanks were analyzed with each analytical batch, as required. Seven results for propylene were qualified as nondetected (U1) because of contamination of method blanks. In all cases, results were within a factor of five of the associated blank concentration. A total of 329 results in 107 samples were qualified because of contamination of associated field blank results. VOCs were detected in several field blanks, at low concentrations. Results in field samples that were within a factor of five when compared with the field blank results were qualified as nondetected (U2).

VOCs 2-butanone, acetone, and methylene chloride are considered common laboratory contaminants, and are qualified as nondetected (U4), when detected in field samples at up to five times the contract-required quantitation limit (CRQL). The results for 2-butanone in 47 samples, the results for acetone in 41 samples, and the results for methylene chloride in 130 samples were qualified as nondetected (U4) based on this criterion.

Internal standards were added to every sample to quantify results (in accordance with the method). A total of 203 results were qualified as estimated or estimated nondetected (J0/U0), because internal standards did not meet QC limits.

Analytes that were detected at concentrations greater than the method detection limit (MDL), but less than the CRQL, were qualified as estimated (J).

3.2 TOTAL NONMETHANE VOLATILE ORGANIC CARBONS

Analyses for nonmethane VOCs were performed on 161 air samples, and the 30-day holding time requirements were met for EPA method 25C.

Initial calibrations were performed, as required, and met QC criteria. Continuing calibrations were performed, as required, and met QC criteria.

LCSs were performed at appropriate frequencies for all samples, and all percent recoveries met QC criteria.

The frequency of analysis of MS and MSD samples met the criterion of 5 percent of the samples, as specified in the FSP/QAPP (Tetra Tech 2002a). All MS recoveries met the established QC limits.

The frequency of analysis of MD samples met the criterion of 5 percent of the samples, as specified in the FSP/QAPP (Tetra Tech 2002a). No sample results were qualified based on MD RPD.

Method blanks were analyzed with each analytical batch, as required. No results were qualified because of contamination of method blanks. Nonmethane VOC results in two samples (SG06SG001 and SG15SG001) were qualified as nondetected (U2) because of contamination of associated field blank results. The results in these two field samples were within a factor of five when compared with the associated field blank results for nonmethane VOCs.

Internal standards and surrogate standards are not used for EPA method 25C.

Analytes that were detected at concentrations greater than the MDL, but less than the CRQL, were qualified as estimated (J).

3.3 CARBON DIOXIDE, CARBON MONOXIDE, METHANE, NITROGEN, AND OXYGEN

Analyses for carbon dioxide, carbon monoxide, methane, nitrogen, and oxygen were performed on 161 air samples, and the 30-day holding time requirements were met for EPA method 3C.

Initial calibrations were performed, as required, and met QC criteria. Continuing calibrations were performed, as required, and met QC criteria with the following exceptions: nitrogen results for eight samples were qualified as estimated (J7) because a continuing calibration standard recovery did not meet the QC limit.

LCSs were performed at appropriate frequencies for all samples, and all percent recoveries met QC criteria.

The frequency of analysis of MS and MSD samples met the criterion of 5 percent of the samples, as specified in the FSP/QAPP (Tetra Tech 2002a). All MS recoveries met the established QC limits.

The frequency of analysis of MD samples met the criterion of 5 percent of the samples, as specified in the FSP/QAPP (Tetra Tech 2002a). No sample results were qualified based on MD RPD.

Method blanks were analyzed with each analytical batch, as required. No results were qualified because of contamination of method blanks. The carbon dioxide result in six samples and the carbon monoxide result in one sample were qualified as nondetected (U2) because of contamination of associated field blank results. The results in these field samples were within a factor of five when compared with the associated field blank results for carbon dioxide and carbon monoxide. Field blanks consisted of ambient air, which contained about 79 percent nitrogen and about 20 percent oxygen. Nitrogen and oxygen results in the soil-gas samples were not qualified or evaluated based on the nitrogen and oxygen content of the field blanks.

Internal standards and surrogate standards are not used for EPA method 3C.

Analytes that were detected at concentrations greater than the MDL, but less than the CRQL, were qualified as estimated (J).

4.0 PRECISION, ACCURACY, REPRESENTATIVENESS, COMPLETENESS, AND COMPARABILITY EVALUATION SUMMARY

Data were evaluated for acceptable quality and quantity; this evaluation was based on the PARCC critical indicator parameters. PARCC parameters were reviewed for laboratory analytical results and are discussed in the following sections.

4.1 PRECISION

Precision is a measure of the variability associated with the entire sampling and analysis process. It is the comparison among independent measurements as the result of repeated application of the same process under similar conditions. It is determined by analysis of field duplicate pairs, MSD pairs, and MD pairs. Precision is expressed as the RPD of a pair of

values (or results). Table C-2 to this appendix lists the acceptance criteria for specified analytical methodologies. Additional criteria and guidance were taken from EPA validation guidance documents (EPA 1999b) and the validation SOW (Tetra Tech 2001). During the data validation process, MSD and MD results were evaluated for compliance with acceptance criteria for precision for each analytical methodology. RPD evaluations are documented in individual data validation reports for each SDG (Attachment C1).

Fifteen field duplicate samples, or 8.6 percent of samples, were collected for this sampling event. The FSP/QAPP stated that field duplicates would be collected at a frequency of 10 percent (Tetra Tech 2002a). While the actual frequency was lower than planned, this has negligible impact on data quality.

MSs were analyzed for each analysis. Frequency criteria for MSD or MD pairs specified in the FSP/QAPP (Tetra Tech 2002a) are 5 percent of the samples or one pair per analytical batch. MSD and MD frequency for each method ranged from 11 to 16 percent. Overall, 61 of the 175 samples collected (or 35 percent) were used for MSs and/or MDs for at least one method. Of 11,410 individual analytical results, none (0 percent) were affected by duplicate precision results that exceeded QC limits.

4.2 ACCURACY

Accuracy is the degree to which a measurement agrees with its true value and is expressed as percent recovery. Table C-2 presents the acceptance criteria for specified analytical methodologies. Additional criteria and guidance were taken from the EPA validation guidance documents (EPA 1999b) and the validation SOW (Tetra Tech 2001). Accuracy is assessed by comparing recoveries of MSs, LCSs, surrogates, and internal standards with associated control limits. Through the process of data validation, MS, LCS, surrogate recoveries, and internal standard recoveries were evaluated for compliance with acceptance criteria for accuracy for each applicable analytical methodology. Evaluations of percent recovery are documented in the individual data validation reports for each SDG (Attachment C1).

The frequency of analysis of MS samples exceeded the requirement specified in the FSP/QAPP (Tetra Tech 2002a) of 5 percent of the samples, with an overall frequency of about 35 percent for all methods and matrices combined (61 of 175 total field samples were used for MS). MS frequency for each individual method ranged from 11 to 14 percent.

LCSs were analyzed as required (one LCS per analytical batch) for chemical parameters in each SDG.

Surrogate spikes were used for organic analyses. Surrogate compounds are added to each field and QC sample.

Internal standards were used in the analyses for VOCs.

Of 11,410 individual analytical records, 1,508, or 13 percent, were affected by accuracy problems related to MS, LCS, surrogates, or internal standards.

4.3 REPRESENTATIVENESS

Representativeness is a qualitative parameter defined by the degree to which data accurately and precisely represent a characteristic of a population, parameter variations at a sampling point, or a process or environmental condition. Sample results were evaluated for representativeness by examining items related to sample collection, including chain-of-custody documentation, sample labeling, collection dates, and the condition of the samples upon receipt at the laboratory. Laboratory procedures were also examined, including anomalies reported by the laboratory, either on receipt of the samples at the laboratory or during analytical processes; adherence to recommended holding times of samples before analysis; calibration of laboratory instruments; adherence to analytical methods; quantitation limits used for samples; and completeness of data package documentation. Any item that may have adversely affected the representativeness of the sample result is documented in the data validation narratives found in Attachment C1.

All samples were analyzed within the holding times specified by the methods. There are no method-specific temperature requirements for air samples. Air samples were collected in Summa™ canisters, and shipped to the laboratory at ambient temperatures.

Of 11,410 individual analytical records, 28, or about 0.2 percent, were affected by calibration problems.

The quantitation limits achieved for all analytes were adequate to satisfy the DQOs.

Laboratory method blank and calibration blank results were evaluated during the data validation process to assess whether laboratory conditions may have affected sample results. Field blank samples were also evaluated to assess the potential for cross contamination in the field. Blank contamination indicates the potential for false positive results at low concentrations and the potential for a high bias in detected results. Of 11,410 analytical results, 357, or 3 percent, were affected by blank contamination. Section 3.0 discusses analytical results for the laboratory method blanks and field blanks for each analysis.

4.4 COMPLETENESS

Completeness is defined as the percentage of measurements judged to be valid. The validity of sample results is determined through the data validation process. All rejected (R) sample results and missing analyses are considered to be incomplete. Data that are qualified as estimated (J) or estimated nondetected (UJ) are considered to be valid and usable. Completeness is calculated and reported for each method and analyte combination. The number of valid results divided by the number of possible individual analyte results, expressed as a percentage, determines the completeness of the data set. For the landfill gas sampling event, 11,410 individual analytical

results were generated and none were rejected, resulting in 100 percent completeness for this sampling event.

4.5 COMPARABILITY

Comparability of the data is a qualitative parameter that expresses the confidence with which one data set may be compared with another. Comparability of the data is achieved by using standard methods for sampling and analysis, reporting data in standard units, normalizing results to standard conditions, and using standardized reporting formats and data validation procedures.

Elevated reporting limits were assessed during the data validation process to assess whether a justifiable reason existed for the raised limits. Reporting limits were frequently raised because of high concentrations of target or interfering compounds. In these cases, sample volumes were diluted and analyzed, or a smaller aliquot of the original sample was analyzed. Elevated reporting limits for these samples were determined to be acceptable for evaluating the nature and extent of landfill gas contamination.

5.0 CONCLUSIONS

Although some qualifiers were added to the data, a final review of the data set, with respect to EPA data quality characteristics discussed in Section 4.0, indicated that the data are of good overall quality. Analytical results from the landfill gas sampling event at HPS met project objectives for the quantity and quality of data required to support decisions based on this investigation.

No data were rejected for this sampling event. Data without qualifiers and data qualified as estimated with a (UJ) or (J) qualifier are usable for purposes in supporting project objectives. Attachment C2 contains the validated analytical data. All pertinent documentation and data are available upon request, including cursory and full validation reports and the database that contains sample results.

6.0 REFERENCES

Tetra Tech EM Inc. (Tetra Tech). 2000. "Comprehensive Long-term Environmental Action Navy II Analytical Services Statement of Work."

Tetra Tech. 2001. "Data Validation Guidelines." August.

Tetra Tech. 2002a. "Field Sampling Plan and Quality Assurance Project Plan (FSP/QAPP) for Parcel E Nonstandard Data Gaps Investigation (Industrial Landfill and Wetland Delineation), Hunters Point Shipyard, San Francisco, California." Draft Final. January.

Tetra Tech. 2002b. "Statement of Work, Subcontract No. 02KM-S0006, Analytical Services for Hunters Point Shipyard, Parcel E, Nonstandard Data Gaps Investigation." March.

U.S. Environmental Protection Agency (EPA). 1995. "Statement of Work for Inorganic Analyses Multi-Media Multi-Concentration." Document Number OLM04.

EPA. 1996. "Method 3C – Determination of Carbon Dioxide, Methane, Nitrogen, and Oxygen from Stationary Sources." *Federal Register*. June.

EPA. 1998a. "EPA Guidance for Quality Assurance Project Plans." EPA QA/G-5 (EPA/600/R-98/018). Quality Assurance Management Staff. Washington, DC. February.

EPA. 1998b. "EPA Requirements for Quality Assurance Project Plans for Environmental Data Operations, External Review Draft Final." EPA QA/R-5. Quality Assurance Management Staff. Washington, DC. October.

EPA. 1999a. "Compendium Method TO-14A, Determination of Volatile Organic Compounds (VOCs) in Ambient Air Using Specially Prepared Canisters With Subsequent Analysis by Gas Chromatography." January.

EPA. 1999b. "Contract Laboratory Program National Functional Guidelines for Organic Data Review." EPA-540/R-99-008. February.

EPA. 2000a. "Method 25C – Determination of Nonmethane Organic Compounds (NMOC) in Landfill Gas." *Federal Register*. February.

EPA. 2000b. "Guidance for the Data Quality Objective Process." Final. EPA QA/G4.

TABLES

TABLE C-1: DATA VALIDATION QUALIFIERS AND COMMENT CODES

Parcel Nonstandard Data Gaps Investigation, Landfill Gas Characterization
Hunters Point Shipyard, San Francisco, California

Qualifier	Description
U1	Compound is nondetected because of laboratory blank contamination
U2	Compound is nondetected because of field blank contamination
U4	Compound is nondetected because of common laboratory contamination
J	Result is greater than the detection limit but less than the reporting limit (just "J"; no subqualifier number exists)
J1/UJ1/R3	Compound is estimated or rejected because of noncompliant instrument performance criteria
J2/UJ2	Matrix duplicate
J3/UJ3/R2	Accuracy – blank spike, surrogate spike, matrix spike
J4/UJ4	Serial dilution
J5/UJ5/R1	Holding time
J7/UJ7/R7	Initial and continuing calibration
J8	Exceeds calibration range
J9/UJ9	Organics: percent difference between columns Inorganics: interference check samples
J0/UJ0/R0	Internal standards
G, D, M, L, H, and Z	TPH identification qualifiers in accordance with the statement of work
Y	Benzo(b)fluoranthene quantitated as the total of benzo(b)fluoranthene and benzo(k)fluoranthene

Notes:

D	Diesel
G	Gasoline
J	Estimated result
H	In the heavier hydrocarbon end of the analyte's range in the standard
L	In the lighter hydrocarbon end of the analyte's range in the standard
M	Motor oil
R	Rejected result
TPH	Total petroleum hydrocarbons
U	Nondetected result
Z	Pattern does not resemble TPH

Sources:

Tetra Tech EM Inc. 2001. "Data Validation Guidelines." August.

U.S. Environmental Protection Agency. 1995. "Statement of Work for Inorganic Analyses Multi-Media Multi-Concentration." Document Number OLM04.

TABLE C-2: DATA VALIDATION CRITERIA

Parcel E Nonstandard Data Gaps Investigation, Landfill Gas Characterization, Hunters Point Shipyard, San Francisco, California

Analysis	Description	
Holding Time Criteria		
VOCs[a,b,c]	Air: J5/UJ5 if HT exceeded by ≤ 30 days R1 if HT exceeded by > 30 days	
Nonmethane Organic Carbon[b,d]	Air: J5/UJ5 if HT exceeded by ≤ 30 days R1 if HT exceeded by > 30 days	
Carbon Dioxide, Carbon Monoxide, Methane, Nitrogen, and Oxygen[b,e]	Air: J5/UJ5 if HT exceeded by ≤ 30 days R1 if HT exceeded by > 30 days	
Blank Contamination Criteria		
Calibration Blank	The purpose is to evaluate analytical instruments for possible laboratory contamination.	
Method Blank	The purpose is to evaluate preparation procedures for possible laboratory contamination.	
Field Blank	The purpose is to evaluate contamination due to field conditions or ambient air intrusion.	
All Analyses[a]	Positive results are reported only if the sample concentration exceeds the concentration in any associated blank by 10 times for analytes recognized as common laboratory contaminants or by 5 times for other analytes.	
Laboratory Duplicate Sample Criteria		
All Methods[b]	**Air**	
Analytes > 5 × CRDL	RPD ± 35%	
Analytes < 5 × CRDL	RPD ± 2 × CRDL	
Surrogate Recovery Criteria		
VOCs[a,c]	**Air Recovery Limits**	
1,2-Dichloroethane-d4	70-130	
Bromofluorobenzene	70-130	
Toluene-d8	70-130	
Nonmethane Organic Carbon	Not required	Not required
Carbon Dioxide, Carbon Monoxide, Methane, Nitrogen, and Oxygen	Not required	Not required

TABLE C-2: DATA VALIDATION CRITERIA (Continued)

Parcel E Nonstandard Data Gaps Investigation, Landfill Gas Characterization, Hunters Point Shipyard, San Francisco, California

Analysis	Description
Spike Recovery Criteria	
VOCs[a,c]	Air Recovery/RPD Limits
1,1-Dichloroethene	70-130/30
Benzene	70-130/30
Chlorobenzene	70-130/30
Toluene	70-130/30
Trichloroethene	70-130/30
Nonmethane Organic Carbon[d]	LCS recovery limits: 70-130 MS/MSD recovery and RPD limits: 70-130/30
Carbon Dioxide, Carbon Monoxide, Methane, Nitrogen, Oxygen[e]	LCS recovery limits: 70-130 MS/MSD recovery and RPD limits: 70-130/30
Calibration Criteria	
VOCs[a]	Initial Calibration (1) RRFs ≥ 0.05 (2) % RSD ≤ 30 Continuing Calibration (1) RRFs ≥ 0.05 (2) %D ≤ 25
Nonmethane Organic Carbon[b]	Initial Calibration %RSDs ≤ 20 or correlation coefficient (r) ≥ 0.995. Continuing Calibration %Ds ≤ 15
Carbon Dioxide, Carbon Monoxide, Methane, Nitrogen, Oxygen[b]	Initial Calibration %RSDs ≤ 20 or correlation coefficient (r) ≥ 0.995. Continuing Calibration %Ds ≤ 15

TABLE C-2: DATA VALIDATION CRITERIA (Continued)

Parcel E Nonstandard Data Gaps Investigation, Landfill Gas Characterization, Hunters Point Shipyard, San Francisco, California

Analysis	Description	
Instrument Performance Criteria		
VOCs[a]	Tuning with BFB, the following ion abundances should be obtained:	
	m/z = 50	8-40% of m/z = 95
	m/z = 75	30-66% of m/z = 95
	m/z = 95	base peak, 100% relative abundance
	m/z = 96	5-9% of m/z = 95
	m/z = 173	<2% of m/z = 174
	m/z = 174	50-120% of m/z = 95
	m/z = 175	4-9% of m/z = 174
	m/z = 176	93-101% of m/z = 174
	m/z = 177	5-9% of m/z = 176
Internal Standards Criteria		
VOCs[a]	(1) All sample internal standard area counts must be within - 50 to + 100 percent of the area counts in the associated calibration standard.	
	(2) All sample internal standard retention times must not vary more than + or - 30 seconds from the retention time of the associated calibration standard.	

Notes:

a Criteria from EPA's "National Functional Guidelines for Organic Data Review," February 1999b.
b Criteria from Tetra Tech EM Inc.'s "Data Validation Guidelines," August 2001.
c Criteria from EPA method TO-14A, January, 1999a
d Criteria from EPA method 25C, February, 2000a
e Criteria from EPA method 3C, June, 1996

%D	Percent difference	HT	Holding time	MSD	Matrix spike duplicate
%RSD	Percent relative standard deviation	J	Estimated result	RPD	Relative percent difference
BFB	Bromofluorobenzene	LCS	Laboratory control sample	RRF	Relative response factor
CRDL	Contract-required detection limit	m/z	Mass-to-charge ratio	U	Nondetected result
EPA	U.S. Environmental Protection Agency	MS	Matrix spike	VOC	Volatile organic compound

TABLE C-3: SAMPLE CONTAINER, HOLDING TIME, AND PRESERVATIVE REQUIREMENTS

Parcel Nonstandard Data Gaps Investigation, Landfill Gas Characterization, Hunters Point Shipyard, San Francisco, California

Analysis	Method[a]	Matrix	Sample Container	Preservative	Holding Time
Air Samples					
Organic Compounds in Ambient Air	EPA TO-14A	Air	Summa™ canister	None	30 days
Nonmethane Organic Carbon	EPA 25C	Air	Summa™ canister	None	30 days
Landfill Gases	EPA 3C	Air	Summa™ canister	None	30 days

Note:

a EPA. 1996. "Method 3C – Determination of Carbon Dioxide, Methane, Nitrogen, and Oxygen from Stationary Sources." *Federal Register*. June.

EPA. 1999a. "Compendium Method TO-14A, Determination of Volatile Organic Compounds (VOCs) in Ambient Air Using Specially Prepared Canisters With Subsequent Analysis by Gas Chromatography." January.

EPA. 2000a. "Method 25C – Determination of Nonmethane Organic Compounds (NMOC) in Landfill Gas." *Federal Register*. February.

EPA U.S. Environmental Protection Agency

TO Toxic Organics

ATTACHMENT C1
DATA VALIDATION REPORTS

Tetra Tech EM Inc.
DATA VALIDATION REPORT

Site:	Hunters Point Shipyard Parcel E Landfill Gas
Delivery Order (DO) No.:	003
Laboratory:	Atmospheric Analysis & Consulting, Inc.
Data Reviewer:	Dina David-Bailey, 3J Environmental Services
Review Date:	May 15, 2002

Sample Delivery Group (SDG) No.: HAN01

Sample Nos.: SG11SG001*
SG12SG001*
SGFBSG001

* Full Validation Sample

Matrix: Air

Collection Date(s): March 25, 2002

The data were qualified according to the U.S. Environmental Protection Agency (EPA) document "USEPA Contract Laboratory Program National Functional Guidelines for Organic Data Review" (October 1999). In addition, the TtEMI document "Data Validation Guidelines for Non-CLP Organic Analyses" was used along with other specified criteria in the EPA methods and the Hunters Point Shipyard Parcel E Nonstandard Data Gaps Investigation Analytical Services Statement of Work (March 2002). Data validation requirements are presented below.

I certify that all data validation criteria outlined in the above referenced documents were assessed, and any qualifications made to the data were in accordance with those documents.

Certified by

DATA VALIDATION REQUIREMENTS

Full validation includes all parameters listed below. An asterisk (*) indicates cursory validation parameters.

Non-CLP Organic Parameters

*	Method compliance
*	Holding times
*	Initial and continuing calibrations
*	Blanks
*	Matrix spike/matrix spike duplicate
*	Laboratory control sample or blank spike
*	Field duplicates
*	Matrix duplicates
*	Surrogate recovery
*	Internal standard performance
	Target compound identification
	Analyte quantitation
	Reported detection limits
*	Overall assessment of data for the SDG

DATA VALIDATION QUALIFIERS AND CODES

Data Validation Qualifiers

U	Nondetected result
J	Estimated result
R	Rejected result

Data Validation Qualifier Codes

U2	Qualified due to field blank
U4	Qualified because it's a common laboratory contaminant
J8	Exceeds calibration range
J	Quantification below reporting limit

TABLE 1
CURSORY DATA VALIDATION SUMMARY

Analysis{PRIVATE }	Holding Times	Surrogates	MS/MSD	Matrix Duplicates	LCS	Blanks	Calibrations	Internal Standards	Field Duplicates	Other
VOA (TO-15)	✓	✓	✓	✓	✓	pg. 6	✓	✓	N/A	pg. 6
Landfill Gas (EPA 3C)	✓	N/A	✓	✓	✓	✓	✓	N/A	N/A	pg. 8
Landfill Gas (EPA 25C)	✓	N/A	✓	✓	✓	✓	✓	N/A	N/A	✓

Notes:
✓ indicates that all quality control criteria were met for the parameter as specified in the prescribed methods and data validation guidelines.
N/A indicates the parameter is not applicable to an analysis.
If criteria were not met and the data were qualified, a page number is indicated where the qualification is detailed.
The data were evaluated for all validation criteria and were found to be in control except where noted. Any outliers are described in the text.

TABLE 2
FULL DATA VALIDATION SUMMARY
Samples SG11SG001 (EPA 3C/25C) and SG12SG001 (TO-15)

Analysis{PRIVATE }	GC/MS Tuning	Target Compound List Identification	Compound or Analyte Quantification	Reported Detection Limits	Tentatively Identified Compounds	System Performance	Interference Check Sample	Graphite Furnace Quality Control
VOA (TO-15)	✓	✓	✓	✓	N/A	✓	N/A	N/A
Landfill Gas (EPA 3C)	N/A	N/A	✓	✓	N/A	✓	N/A	N/A
Landfill Gas (EPA 25C)	N/A	N/A	✓	✓	N/A	✓	N/A	N/A

Notes:
✓ indicates that all quality control criteria were met for the parameter as specified in the prescribed methods and data validation guidelines.
N/A indicates the parameter is not applicable to an analysis.
If criteria were not met and the data were qualified, a page number is indicated where the qualification is detailed.
The data were evaluated for all validation criteria and were found to be in control except where noted. Any outliers found are described below.

DATA ASSESSMENT

VOLATILE ORGANIC ANALYSIS

I. Blank Contamination

A. Due to common laboratory contamination, the following results are considered nondetected (U4).

- Acetone, methylene chloride, and 2-butanone in samples SG11SG001, SG12SG001, and SGFBSG001

Acetone, methylene chloride, and 2-butanone are considered common laboratory contaminants when found at levels less than 10x the reporting limit (RL) in the samples.

B. Due to field blank contamination, the following results are considered nondetected (U2).

- 1,2,4-Trimethylbenzene and chloromethane in sample SG12SG001
- Dichlorodifluoromethane in samples SG11SG001 and SG12SG001
- Toluene in sample SG11SG001

The following compounds were detected in the associated field blank at the concentrations noted below.

Compound	Blank ID	Concentration, ppbv
1,2,4-Trimethylbenzene	SGFBSG001	1.4
Chloromethane	SGFBSG001	0.78
Dichlorodifluoromethane	SGFBSG001	0.83
Toluene	SGFBSG001	1.1

Detected results less than 5x the blank contamination were qualified.

II. Other Qualifications

A. The following detected results are qualified as estimated (J).

- All VOA detected results below the RL

Detected results reported below the RL are considered to be qualitatively acceptable, but quantitatively unreliable due to the uncertainty in analytical precision near the limit of detection.

Full Validation Criteria for Sample SG12SG001

III. GC/MS Tuning

A. The ion abundance criteria were met for the bromofluorobenzene (BFB) GC/MS performance checks. The sample was analyzed within 12 hours of the associated performance check.

IV. Target Compound List (TCL) Identification

A. The relative retention times, mass spectra, and peak identifications of the sample were evaluated. Target compound identification was considered to be correct.

V. Compound Quantitation and Reported Detection Limits

A. Sample results were recalculated, with the proper dilution factors used to calculate the sample results. The target analytes in the sample were correctly quantitated. The reported detection limits were consistent with the contract required reporting limits and reflect any dilutions performed.

VI. System Performance

A. The samples were evaluated for reconstructed ion chromatogram (RIC) baseline shifts, extraneous peaks, loss of resolution, and peak tailing. Except for slightly elevated baseline observed for some samples, no other system degradation was noted.

LANDFILL GAS (EPA 3C) ANALYSIS

I. Other Qualifications

A. The following detected result is qualified as estimated (J8).

- Oxygen in field blank sample SGFBSG001

The result reported for oxygen in field blank sample SGFBSG001 exceeds the instrument calibration range. The result is considered quantitatively uncertain. No further sample dilution was performed on field blank sample SGFBSG001.

Full Validation Criteria for Sample SG11SG001

II. Analyte Quantitation and Reported Detection Limits

A. Sample results were recalculated, with the proper dilution factors used to calculate the sample results. The target analytes in the sample were correctly quantitated. The reported detection limits were consistent with the contract required reporting limit and reflect any dilutions performed.

LANDFILL GAS (EPA 25C) ANALYSIS

Full Validation Criteria for Sample SG11SG001

I. Analyte Quantitation and Reported Detection Limits

A. Sample results were recalculated, with the proper dilution factors used to calculate the sample results. The target analytes in the sample were correctly quantitated. The reported detection limits were consistent with the contract required reporting limit and reflect any dilutions performed.

OVERALL ASSESSMENT OF DATA

I. Method Compliance and Additional Comments

A. For all of the analyses, the standard certificates and preparations were not provided for review. Additionally, the laboratory stated (via telephone communication) that the standards used for the instrument calibration and QC samples came from the same manufacturer because of the commercial unavailability of a second source standard. The effect of this deficiency on data quality is not known.

II. Usability

A. Due to contamination and quantitation problems, several results for VOA and one result for oxygen were qualified. Several VOA results were qualified as nondetected due to common and field blank contamination. One result for oxygen was estimated due to a quantitation problem.

B. Sample SG12SG001 was reanalyzed at a higher dilution due to high 1,1,1-trichloroethane and tetrachloroethylene concentrations exceeding the instrument calibration range in the initial analysis. The original analysis should be used as the final validated results for all of the VOA analytes except for 1,1,1-trichloroethane and tetrachloroethylene.

C. The quality control criteria reviewed, other than those discussed above, were met and are considered acceptable. No data were rejected. Estimated sample results (J) are usable only for limited purposes. Based upon the cursory and full data validation, all other results are considered valid and usable for all purposes. In general, the absence of rejected data and the small number of qualifiers added to the data indicate high usability.

Tetra Tech EM Inc.
DATA VALIDATION REPORT

Site:	Hunters Point Shipyard Parcel E Landfill Gas
Delivery Order (DO) No.:	003
Laboratory:	Atmospheric Analysis & Consulting, Inc.
Data Reviewer:	Dina David-Bailey, 3J Environmental Services
Review Date:	May 16, 2002

Sample Delivery Group (SDG) No.: HAN02

Sample Nos.: SG06SG001
SG07SG001*
SG08SG001*
SG15SG001
SGFBSG002

* Full Validation Sample

Matrix: Air

Collection Date(s): March 26, 2002

The data were qualified according to the U.S. Environmental Protection Agency (EPA) document "USEPA Contract Laboratory Program National Functional Guidelines for Organic Data Review" (October 1999). In addition, the TtEMI document "Data Validation Guidelines for Non-CLP Organic Analyses" was used along with other specified criteria in the EPA methods and the Hunters Point Shipyard Parcel E Nonstandard Data Gaps Investigation Analytical Services Statement of Work (March 2002). Data validation requirements are presented below.

I certify that all data validation criteria outlined in the above referenced documents were assessed, and any qualifications made to the data were in accordance with those documents.

Certified by

DATA VALIDATION REQUIREMENTS

Full validation includes all parameters listed below. An asterisk (*) indicates cursory validation parameters.

Non-CLP Organic Parameters

*	Method compliance
*	Holding times
*	Initial and continuing calibrations
*	Blanks
*	Matrix spike/matrix spike duplicate
*	Laboratory control sample or blank spike
*	Field duplicates
*	Matrix duplicates
*	Surrogate recovery
*	Internal standard performance
	Target compound identification
	Analyte quantitation
	Reported detection limits
*	Overall assessment of data for the SDG

DATA VALIDATION QUALIFIERS AND CODES

Data Validation Qualifiers

U	Nondetected result
J	Estimated result
R	Rejected result

Data Validation Qualifier Codes

U2	Qualified due to field blank
U4	Qualified because it's a common laboratory contaminant
J8	Exceeds calibration range
J	Quantification below reporting limit

TABLE 1
CURSORY DATA VALIDATION SUMMARY

Analysis{PRIVATE }	Holding Times	Surrogates	MS/MSD	Matrix Duplicates	LCS	Blanks	Calibrations	Internal Standards	Field Duplicates	Other
VOA (TO-15)	✓	✓	✓	✓	✓	pg. 6	✓	✓	N/A	pg. 6
Landfill Gas (EPA 3C)	✓	N/A	✓	✓	✓	✓	✓	N/A	N/A	pg. 8
Landfill Gas (EPA 25C)	✓	N/A	✓	✓	✓	pg. 9	✓	N/A	N/A	✓

Notes:
✓ indicates that all quality control criteria were met for the parameter as specified in the prescribed methods and data validation guidelines.
N/A indicates the parameter is not applicable to an analysis.
If criteria were not met and the data were qualified, a page number is indicated where the qualification is detailed.
The data were evaluated for all validation criteria and were found to be in control except where noted. Any outliers are described in the text.

TABLE 2
FULL DATA VALIDATION SUMMARY
Samples SG07SG001 (EPA 3C/25C) and SG08SG001 (TO-15)

Analysis{PRIVATE }	GC/MS Tuning	Target Compound List Identification	Compound or Analyte Quantification	Reported Detection Limits	Tentatively Identified Compounds	System Performance	Interference Check Sample	Graphite Furnace Quality Control
VOA (TO-15)	✓	✓	✓	✓	N/A	✓	N/A	N/A
Landfill Gas (EPA 3C)	N/A	N/A	✓	✓	N/A	✓	N/A	N/A
Landfill Gas (EPA 25C)	N/A	N/A	✓	✓	N/A	✓	N/A	N/A

Notes:
✓ indicates that all quality control criteria were met for the parameter as specified in the prescribed methods and data validation guidelines.
N/A indicates the parameter is not applicable to an analysis.
If criteria were not met and the data were qualified, a page number is indicated where the qualification is detailed.
The data were evaluated for all validation criteria and were found to be in control except where noted. Any outliers found are described below.

DATA ASSESSMENT

VOLATILE ORGANIC ANALYSIS

I. Blank Contamination

A. Due to common laboratory contamination, the following results are considered nondetected (U4).

- Acetone in field blank sample SGFBSG002
- Methylene chloride in samples SG06SG001, SG08SG001, and SGFBSG002
- 2-Butanone in samples SG06SG001, SG08SG001, and SG15SG001

Acetone, methylene chloride, and 2-butanone are considered common laboratory contaminants when found at levels less than 10x the reporting limit (RL) in the samples.

B. Due to field blank contamination, the following results are considered nondetected (U2).

- 1,2,4-Trimethylbenzene and hexane in sample SG06SG001
- Toluene in samples SG07SG001 and SG08SG001

The following compounds were detected in the associated field blank at the concentrations noted below.

Compound	Blank ID	Concentration, ppbv
1,2,4-Trimethylbenzene	SGFBSG002	1.0
Hexane	SGFBSG002	2.6
Toluene	SGFBSG002	1.1

Detected results less than 5x the blank contamination were qualified.

II. Other Qualifications

A. The following detected results are qualified as estimated (J).

- All VOA detected results below the RL

Detected results reported below the RL are considered to be qualitatively acceptable, but quantitatively unreliable due to the uncertainty in analytical precision near the limit of detection.

Full Validation Criteria for Sample SG08SG001

III. GC/MS Tuning

A. The ion abundance criteria were met for the bromofluorobenzene (BFB) GC/MS performance checks. The sample was analyzed within 12 hours of the associated performance check.

IV. Target Compound List (TCL) Identification

A. The relative retention times, mass spectra, and peak identifications of the sample were evaluated. Target compound identification was considered to be correct.

V. Compound Quantitation and Reported Detection Limits

A. Sample results were recalculated, with the proper dilution factors used to calculate the sample results. The target analytes in the sample were correctly quantitated. The reported detection limits were consistent with the contract required reporting limits and reflect any dilutions performed.

VI. System Performance

A. The samples were evaluated for reconstructed ion chromatogram (RIC) baseline shifts, extraneous peaks, loss of resolution, and peak tailing. Except for slightly elevated baseline observed for some samples, no other system degradation was noted.

LANDFILL GAS (EPA 3C) ANALYSIS

I. Other Qualifications

A. The following detected results are qualified as estimated (J8).

- Oxygen in samples SG06SG001 and SGFBSG002
- Methane in sample SG07SG001

The results reported for oxygen in samples SG06SG001 and SGFBSG002 and for methane in sample SG07SG007 exceed the instrument calibration range. The results are considered quantitatively uncertain. No further dilution was performed on samples SG06SG001, SG07SG001, and SGFBSG002.

Full Validation Criteria for Sample SG07SG001

II. Analyte Quantitation and Reported Detection Limits

A. Sample results were recalculated, with the proper dilution factors used to calculate the sample results. The target analytes in the sample were correctly quantitated. The reported detection limits were consistent with the contract required reporting limit and reflect any dilutions performed.

LANDFILL GAS (EPA 25C) ANALYSIS

I. Blank Contamination

A. Due to field blank contamination, the following results are considered nondetected (U2).

- NMOC in samples SG06SG001 and SG15SG001

The following analyte was detected in the associated field blank at the concentration noted below.

Compound	Blank ID	Concentration, ppmv
NMOC	SGFBSG002	7.0

Detected results less than 5x the blank contamination were qualified.

Full Validation Criteria for Sample SG07SG001

II. Analyte Quantitation and Reported Detection Limits

A. Sample results were recalculated, with the proper dilution factors used to calculate the sample results. The target analytes in the sample were correctly quantitated. The reported detection limits were consistent with the contract required reporting limit and reflect any dilutions performed.

OVERALL ASSESSMENT OF DATA

I. Method Compliance and Additional Comments

A. For all of the analyses, the standard certificates and preparations were not provided for review. Additionally, the laboratory stated (via telephone communication) that the standards used for the instrument calibration and QC samples came from the same manufacturer because of the commercial unavailability of a second source standard. The effect of this deficiency on data quality is not known.

II. Usability

A. Due to contamination and quantitation problems, several results for TO-15, EPA 3C, and EPA 25C analyses were qualified. Several VOA results and two NMOC results were qualified as nondetected due to common and field blank contamination. Two results for oxygen and one result for methane were estimated due to quantitation problems.

B. Sample SG08SG001 was reanalyzed at a higher dilution due to matrix interference observed in the initial analysis. The higher diluted analysis should be used as the final validated results for all of the VOA analytes.

C. The quality control criteria reviewed, other than those discussed above, were met and are considered acceptable. No data were rejected. Estimated sample results (J) are usable only for limited purposes. Based upon the cursory and full data validation, all other results are considered valid and usable for all purposes. In general, the absence of rejected data and the small number of qualifiers added to the data indicate high usability.

Tetra Tech EM Inc.
DATA VALIDATION REPORT

Site:	Hunters Point Shipyard Parcel E Landfill Gas
Delivery Order (DO) No.:	003
Laboratory:	Atmospheric Analysis & Consulting, Inc.
Data Reviewer:	Sripriya Kannan, 3J Environmental Services
Review Date:	May 16, 2002

Sample Delivery Group (SDG) No.: HAN03

Sample Nos.: SG01SG001*
SG01SG002
SG04SG001
SG04SG002
SG24SG001
SG24SG002
SGFBSG003

* Full Validation Sample

Matrix: Air

Collection Date(s): March 27, 2002

The data were qualified according to the U.S. Environmental Protection Agency (EPA) document "USEPA Contract Laboratory Program National Functional Guidelines for Organic Data Review" (October 1999). In addition, the TtEMI document "Data Validation Guidelines for Non-CLP Organic Analyses" was used along with other specified criteria in the EPA methods and the Hunters Point Shipyard Parcel E Nonstandard Data Gaps Investigation Analytical Services Statement of Work (March 2002). Data validation requirements are presented below.

I certify that all data validation criteria outlined in the above referenced documents were assessed, and any qualifications made to the data were in accordance with those documents.

Certified by

DATA VALIDATION REQUIREMENTS

Full validation includes all parameters listed below. An asterisk (*) indicates cursory validation parameters.

Non-CLP Organic Parameters

*	Method compliance
*	Holding times
*	Initial and continuing calibrations
*	Blanks
*	Matrix spike/matrix spike duplicate
*	Laboratory control sample or blank spike
*	Field duplicates
*	Matrix duplicates
*	Surrogate recovery
*	Internal standard performance
	Target compound identification
	Analyte quantitation
	Reported detection limits
*	Overall assessment of data for the SDG

DATA VALIDATION QUALIFIERS AND CODES

Data Validation Qualifiers

U	Nondetected result
J	Estimated result
R	Rejected result

Data Validation Qualifier Codes

U2	Qualified due to field blank
U4	Qualified because it's a common laboratory contaminant
J8	Exceeds calibration range
J	Quantification below reporting limit

TABLE 1
CURSORY DATA VALIDATION SUMMARY

Analysis{PRIVATE }	Holding Times	Surrogates	MS/MSD	Matrix Duplicates	LCS	Blanks	Calibrations	Internal Standards	Field Duplicates	Other
VOA (TO-15)	✓	✓	✓	✓	✓	pg. 6	✓	✓	pg. 7	pg. 6
Landfill Gas (EPA 3C)	✓	N/A	✓	✓	✓	✓	✓	N/A	✓	pg. 8
Landfill Gas (EPA 25C)	✓	N/A	✓	✓	✓	pg. 9	✓	N/A	pg. 9	✓

Notes:
✓ indicates that all quality control criteria were met for the parameter as specified in the prescribed methods and data validation guidelines.
N/A indicates the parameter is not applicable to an analysis.
If criteria were not met and the data were qualified, a page number is indicated where the qualification is detailed.
The data were evaluated for all validation criteria and were found to be in control except where noted. Any outliers are described in the text.

TABLE 2
FULL DATA VALIDATION SUMMARY
Samples SG01SG001

Analysis{PRIVATE }	GC/MS Tuning	Target Compound List Identification	Compound or Analyte Quantification	Reported Detection Limits	Tentatively Identified Compounds	System Performance	Interference Check Sample	Graphite Furnace Quality Control
VOA (TO-15)	✓	✓	✓	✓	N/A	✓	N/A	N/A
Landfill Gas (EPA 3C)	N/A	N/A	✓	✓	N/A	✓	N/A	N/A
Landfill Gas (EPA 25C)	N/A	N/A	✓	✓	N/A	✓	N/A	N/A

Notes:
✓ indicates that all quality control criteria were met for the parameter as specified in the prescribed methods and data validation guidelines.
N/A indicates the parameter is not applicable to an analysis.
If criteria were not met and the data were qualified, a page number is indicated where the qualification is detailed.
The data were evaluated for all validation criteria and were found to be in control except where noted. Any outliers found are described below.

DATA ASSESSMENT

VOLATILE ORGANIC ANALYSIS

I. Blank Contamination

A. Due to common laboratory contamination, the following results are considered nondetected (U4).

- Acetone in samples SG01SG002, SG24SG001, SG24SG002, and SGFBSG003
- 2-Butanone in samples SG04SG001, SG24SG001, SG24SG002, and SGFBSG003
- Methylene chloride in samples SG01SG001, SG01SG002, SG04SG002, SG24SG001, SG24SG002, and SGFBSG003

Acetone, methylene chloride, and 2-butanone are considered common laboratory contaminants when found at levels less than 10x the reporting limit (RL) in the samples.

B. Due to field blank contamination, the following results are considered nondetected (U2).

- 1,4-Dichlorobenzene and benzene in sample SG24SG001
- Chloromethane in sample SG01SG002
- Ethylbenzene, heptane, and propylene in sample SG24SG002
- Hexane in samples SG24SG001 and SG24SG002
- Ethanol in samples SG01SG001, SG01SG002, SG04SG002, and SG24SG001
- Toluene in samples SG01SG002, SG04SG001, SG04SG002, SG24SG001, and SG24SG002

The following compounds were detected in the associated field blank at the concentrations noted below.

Compound	Blank ID	Concentration, ppbv
1,4-Dichlorobenzene	SGFBSG003	0.88
Benzene	SGFBSG003	0.73
Chloromethane	SGFBSG003	0.78
Cyclohexane	SGFBSG003	0.78
Dichlorodifluoromethane	SGFBSG003	0.79
Ethylbenzene	SGFBSG003	0.86
Heptane	SGFBSG003	0.86
Hexane	SGFBSG003	8.5
Propylene	SGFBSG003	10
Ethanol	SGFBSG003	6.9
Toluene	SGFBSG003	5.0

Detected results less than 5x the blank contamination were qualified.

II. Other Qualifications

A. The following detected results are qualified as estimated (J).

- All VOA detected results below the RL

Detected results reported below the RL are considered to be qualitatively acceptable, but quantitatively unreliable due to the uncertainty in analytical precision near the limit of detection.

III. Field Duplicates

A. The following RPDs were obtained for the field duplicate samples, SG24SG001 and SG24SG002:

- 181% for 1,2,4-Trimethlybenzene,
- 138% for 2-Butanone
- 136% for Heptane
- 57% for Methylene chloride
- 150% for Propylene
- 82% for Toluene

For air samples, the field RPD guidelines is ±50%. The data are not qualified on the basis of field duplicate results.

Full Validation Criteria for Sample SG01SG001

IV. GC/MS Tuning

A. The ion abundance criteria were met for the bromofluorobenzene (BFB) GC/MS performance checks. The sample was analyzed within 12 hours of the associated performance check.

V. Target Compound List (TCL) Identification

A. The relative retention times, mass spectra, and peak identifications of the sample were evaluated. Target compound identification was considered to be correct.

VI. Compound Quantitation and Reported Detection Limits

A. Sample results were recalculated, with the proper dilution factors used to calculate the sample results. The target analytes in the sample were correctly quantitated. The reported detection limits were consistent with the contract required reporting limits and reflect any dilutions performed.

VII. System Performance

A. The samples were evaluated for reconstructed ion chromatogram (RIC) baseline shifts, extraneous peaks, loss of resolution, and peak tailing. Except for slightly elevated baseline observed for some samples, no other system degradation was noted.

LANDFILL GAS (EPA 3C) ANALYSIS

I. Other Qualifications

A. The following detected results are qualified as estimated (J8).

- Oxygen in sample SG24SG002 and field blank sample SGFBSG003
- Carbon dioxide and methane in samples SG01SG001, SG01SG002, and SG04SG001

The results reported for oxygen, carbon dioxide and methane in the samples exceed the instrument calibration range. The results are considered quantitatively uncertain. No further dilutions were performed on samples SG01SG001, SG01SG002, SG04SG001, SG24SG002, and SGFBSG003.

Full Validation Criteria for Sample SG01SG001

II. Analyte Quantitation and Reported Detection Limits

A. Sample results were recalculated, with the proper dilution factors used to calculate the sample results. The target analytes in the sample were correctly quantitated. The reported detection limits were consistent with the contract required reporting limit and reflect any dilutions performed.

LANDFILL GAS (EPA 25C) ANALYSIS

Full Validation Criteria for Sample SG01SG001

I. Blank Contamination

A. Due to field blank contamination, the following results are considered nondetected (U2).

- Methane in samples SG24SG001 and SG24SG002

The following compound was detected in the associated field blank at the concentration noted below.

Compound	Blank ID	Concentration, ppmv
Methane	SGFBSG003	468

Detected results less than 5x the blank contamination were qualified.

II. Field Duplicates

A. The following RPD was obtained for the field duplicate samples, SG24SG001 and SG24SG002:

- 177% for Methane

For air samples, the field RPD guideline is ±50%. The data are not qualified on the basis of field duplicate results.

III. Analyte Quantitation and Reported Detection Limits

A. Due to methane results outside of the linear range of the instrument, results for samples SG01SG001, SG01SG002 and SG04SG002 were not obtained using EPA Method 25C. The laboratory reported the % methane results for these samples from EPA Method 3C.

B. Sample results were recalculated, with the proper dilution factors used to calculate the sample results. The target analytes in the sample were correctly quantitated. The reported detection limits were consistent with the contract required reporting limit and reflect any dilutions performed.

OVERALL ASSESSMENT OF DATA

I. Method Compliance and Additional Comments

A. For all of the analyses, the standard certificates and preparations were not provided for review. Additionally, the laboratory stated (via telephone communication) that the standards used for the instrument calibration and QC samples came from the same manufacturer because of the commercial unavailability of a second source standard. The effect of this deficiency on data quality is not known.

II. Usability

A. Due to contamination and quantitation problems, several results for TO-15, EPA Method 25C, and EPA Method 3C analyses were qualified. Several VOA results were qualified as nondetected due to common and field blank contamination. Two methane results were qualified as nondetected due to field blank contamination. Two results for oxygen and three results for carbon dioxide and methane were estimated due to quantitation problems.

B. Samples SG01SG001, SG01SG002, SG04SG001 and SG04SG002 were reanalyzed at higher dilutions due to matrix interference in the initial analysis. The diluted analyses were within the calibration range and free of matrix interference. The following diluted results for all of these samples should be used as the final validated results for all of the VOA analytes: SG01SG001DL2, SG01SG002DL2, SG04SG001DL, and SG04SG002DL.

C. The quality control criteria reviewed, other than those discussed above, were met and are considered acceptable. No data were rejected. Estimated sample results (J) are usable only for limited purposes. Based upon the cursory and full data validation, all other results are considered valid and usable for all purposes. In general, the absence of rejected data and the small number of qualifiers added to the data indicate high usability.

DATA VALIDATION REPORT{PRIVATE }

Site:	Hunters Point Shipyard, Parcel E Nonstandard Data Gaps Investigation
Contract Task Order (CTO) No.: DO 003	
Laboratory:	Atmospheric Analysis & Consulting, Inc.
Data Reviewer:	ETHIX
Review Date:	5/13/02

Sample Delivery Group (SDG) No.: HAN04

Sample Nos.:	SG06SG002	SG08SG002 *	SG25SG001DL	SG25SG003
	SG06SG003	SG08SG003	SG25SG002	SG25SG003DL
	SG06SG004	SG25SG001 *	SG25SG002DL	

All samples were received intact and properly labeled.

*Full validation sample

Matrix: Air

Collection Dates: 3/27/02 and 3/28/02

The data were qualified according to the U.S. Environmental Protection Agency (EPA) documents "USEPA Contract Laboratory Program National Functional Guidelines for Organic Data Review" (October 1999) and "USEPA Contract Laboratory Program National Functional Guidelines For Inorganic Data Review" (February 1994). In addition, the Tetra Tech EM Inc. (TtEMI) documents "Data Validation Guidelines for CLP Organic Analyses," "Data Validation Guidelines for CLP Inorganic Analyses," "Data Validation Guidelines for Non-CLP Organic Analyses," "Data Validation Guidelines for Non-CLP Inorganic and Physical Analyses" (August, 1 2001), and the document entitled “TtEMI Comprehensive Long-term Environmental Action Navy II Analytical Services Statement of Work” (May 2000) were used along with other specified criteria in EPA methods. Data validation requirements are presented below.

I certify that all data validation criteria outlined in the above referenced documents were assessed, and any qualifications made to the data were in accordance with those documents.

Certified by

DATA VALIDATION REQUIREMENTS

Full validation includes all parameters listed below. Cursory validation parameters are indicated by an asterisk (*).

CLP Organic Parameters

* Holding times
GC/MS instrument performance check
* Initial and continuing calibrations
* Blanks
* Surrogate recovery
* Matrix spike/matrix spike duplicate
* Laboratory control sample or blank spike *
* Field duplicates
* Internal standard performance
Target compound identification
Tentatively identified compounds
Compound quantitation
Reported detection limits
System performance
* Overall assessment of data for the SDG

CLP Inorganic Parameters

* Holding times
* Initial and continuing calibrations
* Blanks
* Matrix spike
* Laboratory control sample or blank spike
Field duplicates
* Matrix duplicates
ICP interference check sample
GFAA quality control
* ICP serial dilution
Sample result verification
Analyte quantitation
Reported detection limits
* Overall assessment of data for the SDG

Non-CLP Organic and Inorganic Parameters

* Method compliance
* Holding times
* Initial and continuing calibrations
* Blanks
* Matrix spike/matrix spike duplicate
* Laboratory control sample or blank spike
* Field duplicates
* Matrix duplicates
* Surrogate recovery
Analyte quantitation
Reported detection limits
* Overall assessment of data for the SDG

DATA VALIDATION QUALIFIERS AND CODES

Data Validation Qualifiers and Codes

U1	Compound is nondetected due to laboratory blank contamination
U2	Compound is nondetected due to field blank contamination
U4	Compound is nondetected because of common laboratory contamination
J0	Compound is estimated due to internal standard exceedance
J1	Compound is estimated due to noncompliant instrument performance criteria
J2	Compound is estimated due to laboratory duplicate precision exceedance
J3	Compound is estimated due to surrogate/LCS/MS exceedance
J4	Compound is estimated due to serial dilution exceedance
J5	Compound is estimated due to holding time exceedance
J6	Compound is estimated due to field duplicate precision exceedance
J7	Compound is estimated due to calibration exceedance
J8	Compound is estimated due to calibration range exceedance
J9	Compound is estimated due to interference check exceedance (metals) or confirmation problems (dual column analyses)
UJ9	Compound is nondetected and estimated due to confirmation problems (dual column analyses)
R0	Compound is rejected due to internal standard exceedance
R1	Compound is rejected due to holding time exceedance
R2	Compound is rejected due to surrogate/LCS/MS exceedance
R3	Compound is rejected due to noncompliant instrument performance criteria
R7	Compound is rejected due to calibration exceedance

TABLE 1
CURSORY DATA VALIDATION SUMMARY

Analysis{PRIVATE}	Holding Times	Surrogates	MS/MSD	Matrix Duplicates	LCS	Blanks	Calibrations	Internal Standards	Field Duplicates	Other
TO-15	✓	pg. 6	✓	N/A	✓	pg. 6	✓	pg. 7	pg. 7	pg. 9
EPA 3C	✓	N/A	✓	N/A	✓	✓	✓	N/A	pg. 10	pg. 10
EPA 25C	✓	N/A	✓	N/A	✓	✓	✓	N/A	pg. 12	pg. 12

Notes:
✓ indicates that all quality control criteria were met for the parameter as specified in the prescribed methods and data validation guidelines.
N/A indicates the parameter is not applicable to an analysis.
If criteria were not met and the data were qualified, a page number is indicated where the qualification is detailed.
The data were evaluated for all validation criteria and were found to be in control except where noted. Any outliers are described in the text.

TABLE 2
FULL DATA VALIDATION SUMMARY
Samples SG08SG002 and SG25SG001

Analysis{PRIVATE }	GC/MS Tuning	Target Compound List Identification	Compound or Analyte Quantification	Reported Detection Limits	Tentatively Identified Compounds	System Performance	Interference Check Sample	Graphite Furnace Quality Control
TO-15	✓	✓	✓	✓	N/A	✓	N/A	N/A
EPA 3C	N/A	N/A	✓	✓	N/A	✓	N/A	N/A
EPA 25C	N/A	N/A	✓	✓	N/A	✓	N/A	N/A

Notes:
✓ indicates that all quality control criteria were met for the parameter as specified in the prescribed methods and data validation guidelines.
N/A indicates the parameter is not applicable to an analysis.
If criteria were not met and the data were qualified, a page number is indicated where the qualification is detailed.
The data were evaluated for all validation criteria and were found to be in control except where noted. Any outliers found are described below.

DATA ASSESSMENT

TO-15 ANALYSIS

I. Surrogate Recovery

A. Due to surrogate recovery problems, the following detected results are qualified as estimated (J3).

- 1,1,2-trichloro-1,2,2-trifluoroethane, 1,1-dichloroethane, 1,2,4-trimethylbenzene, 1,2-dichloro-1,1,2,2-tetrafluoroethane, 1,2-dichlorobenzene, 1,2-dichloroethane, benzene, chlorobenzene, chloroethane, cis-1,2-dichloroethene, cyclohexane, dichlorodifluoromethane, ethylbenzene, heptane, hexane, m,p-xylenes, methylene chloride, propylene, t-1,2-dichloroethylene, toluene, trichloroethene and vinyl chloride in samples SG25SG001, SG25SG002 and SG25SG003
- 1,3-dichlorobenzene, 4-ethyltoluene in samples SG25SG001 and SG25SG003
- 1,4-dichlorobenzene, chloromethane, in sample SGS25G002 and SG25SG003
- 1,1,1-trichloroethane, 1,3,5-trimethylbenzene, in sample SG25SG003
- tetrahydrofuran in sample SG25SG001 and SG25SG002
- tetrachloroethylene is sample SG25SG001
- o-xylene in sample SG25SG003

The surrogates outside of QC limits are listed below.

Sample ID	Surrogate	% R	QC Limits
SG25SG001	BFB	248	75-125
SG25SG002	BFB	310	75-125
SG25SG003	BFB	557	75-125

High percent recoveries indicate that detected results may be biased high.

II. Blank Contamination

A. Due to common laboratory contamination, the following results are considered nondetected (U4).

- acetone in samples SG06SG003 and SG06SG004
- methylene chloride in samples SG06SG002, SG06SG003, SG25SG001, SG25SG001DL, SG25SG002, SG25SG002DL, SG25SG003, SG25SG003DL, SG06SG004 and SG08SG003
- 2-Butanone in samples SG06SG002, SG25SG001DL, SG25SG002DL and SG25SG003DL

Acetone, methylene chloride, and 2-butanone are considered common laboratory contaminants when found at levels less than 5x the CRQL in environmental samples and not found in the associated blanks.

III. Internal Standards

A. Due to internal standard problems, the following detected and nondetected results are qualified as estimated (J0/UJ0).

- All compounds quantitated using chlorobenzene-d5 in samples SG25SG001, SG25SG002 and SG25SG003

The internal standard area counts in the samples listed above were less than one half of the reference standard and are listed below.

Sample	Internal Standard	Value	QC Limits
SG25SG001	chlorobenzene-d5	1892485	2977695 - 1190780
SG25SG002	chlorobenzene-d5	1765697	2977695 - 1190780
SG25SG003	chlorobenzene-d5	1562993	2977695 - 1190780

Internal standard area counts of less than 50% of the standard area count may indicate a loss of instrument sensitivity.

IV. Field Duplicates

A. The following RPDs were obtained for the field duplicate samples SG25SG001 / SG25SG002:

- 42.7% for propylene
- 163% for dichlorodifluoromethane
- 12% for 1,2-dichloro-1,1,2,2-tetrafluoroethane
- 56.9% for vinyl chloride
- 4.7% for chloroethane
- 2.4% for methylene chloride
- 10.2% for 1,1,2-trichloro-1,2,2-trifluoroethane
- 58.1% for t-1,2-dichloroethylene
- 47.3% for 1,1-dichloroethane
- 87.8% for cis-1,2-dichloroethene
- 1.6% for hexane
- 18.2% for tetrahydrofuran
- 4.9% for 1,2-dichloroethane
- 5.8% for benzene
- 9.9% for cyclohexane
- 155% for trichloroethene
- 167% for heptane
- 20% for toluene
- NQ for tetrachloroethylene
- 196% for chlorobenzene
- 70% for ethylbenzene
- 15% for m,p-xylenes
- NQ for 4-ethyltoluene
- 44% for 1,2,4-trimethylbenzene
- NQ for 1,3-dichlorobenzene
- 37% for 1,2-dichlorobenzene
- NQ for chloromethane

- NQ for 1,4-dichlorobenzene

The following RPDs were obtained for the field duplicate samples SG25SG001 / SG25SG002:

- 16% for propylene
- 11% for dichlorodifluoromethane
- 15% for chloromethane
- 9% for 1,2-dichloro-1,1,2,2-tetrafluoroethane
- 8% for vinyl chloride
- 8% for chloroethane
- 138% for ethanol
- 8% for methylene chloride
- 32% for carbon disulfide
- 0% for 1,1,2-trichloro-1,2,2-trifluoroethane
- 12% for 1,2-dichloroethene
- 5% for 1,1-dichloroethane
- 61% for 2-butanone
- 4% for cis-1,2-dichloroethene
- 9% for hexane
- 16% for tetrahydrofuran
- 15% for 1,2-dichloroethane
- 2% for benzene
- 1% for cyclohexane
- 130% for trichloroethene
- 2% for heptane
- 0% for 1,1,2-trichloroethane
- 15% for toluene
- NQ for tetrachloroethylene
- 33% for chlorobenzene
- 21% for ethylbenzene
- 31% for m,p-xylenes
- NQ for styrene
- 48% for o-xylene
- 33% for 4-ethyltoluene
- 32% for 1,3,5-trimethylbenzene
- 0% for 1,2,4-trimethylbenzene
- 59% for 1,3-dichlorobenzene
- 5% for 1,4-dichlorobenzene
- 62% for 1,2-dichlorobenzene
- NQ for MIBK
- NQ for 1,2,4-trichlorobenzene
- NQ for hexachlorobutadiene

For air samples, the field RPD guideline is $\pm$ 30. The data are not qualified on the basis of field duplicate results.

V. Other Qualifications

A. The following results are qualified as estimated (J).

- All TO-15 detected results reported below the CRQL

Detected results reported below the CRQL are considered to be qualitatively acceptable, but quantitatively unreliable due to the uncertainty in analytical precision near the limit of detection.

B. The following detected results are qualified as estimated (J8) due to calibration range exceedance.

- hexane in samples SG25SG001, SG25SG002 and SG25SG003

Analytes detected at concentrations exceeding the calibration range are quantitatively unreliable. The samples listed above were appropriately diluted and reanalyzed.

Full Validation Criteria for Sample SG08SG002 and SG25SG001

VI. GC/MS Tuning

A. The ion abundance criteria were met for the bromofluorobenzene (BFB) GC/MS performance check. The samples were analyzed within 12 hours of the associated performance check.

VII. Target Compound List (TCL) Identification

A. The relative retention times, mass spectra, and peak identifications of the samples were evaluated. Target compound identification was considered to be correct.

VIII. Compound Quantitation and Reported Detection Limits

A. Sample results were recalculated with the proper dilution factors and volumes used to calculate the sample results. The samples were found to be correctly quantitated. The reported detection limits were consistent with TtEMI's required report limits and reflect any dilutions and volumes used.

IX. System Performance

A. The samples were evaluated for reconstructed ion chromatogram (RIC) baseline shifts, extraneous peaks, loss of resolution, and peak tailing. Matrix interference was observed in the original analysis of sample SG25SG001.

EPA METHOD 3C ANALYSIS

I. Field Duplicates

A. The following RPDs were obtained for the field duplicate samples SG25SG001 / SG25SG002:

- 13.8% for oxygen
- 9.5% for nitrogen
- 1.6% for methane
- 0% for carbon dioxide

For air samples, the field RPD guideline is ± 30%. The data are not qualified on the basis of field duplicate results.

II. Other Qualifications

A. The following detected results are qualified as estimated (J8) due to calibration range exceedance.

- Carbon dioxide in samples SG25SG001 and SG25SG002
- Methane in samples SG25SG001, SG25SG002 and SG25SG003

Analytes detected at concentrations exceeding the calibration range are quantitatively unreliable. The samples listed above were not appropriately diluted and reanalyzed.

Full Validation Criteria for Sample SG08SG002 and SG25SG001

III. Compound Quantitation and Reported Detection Limits

A. Sample results were recalculated, with the proper dilution factors and volumes used to calculate the sample results. The samples were found to be correctly quantitated. The reported detection limits were consistent with TtEMI's required report limits and reflect any dilutions and volumes used.

IV. System Performance

A. The samples were evaluated for baseline shifts, extraneous peaks, loss of resolution, and peak tailing. No system degradation was noted.

EPA METHOD 25C ANALYSIS

I. Field Duplicates

A. The following RPDs were obtained for the field duplicate samples SG25SG001 / SG25SG002:

- 1.8% for methane
- 7.6% for NMOC

For air samples, the field RPD guideline is ± 30%. The data are not qualified on the basis of field duplicate results.

II. Other Qualifications

A. The following results are qualified as estimated (J).

- All detected results reported below the TtEMI required report limit (RL)

Detected results reported below the RL are considered to be qualitatively acceptable, but quantitatively unreliable due to the uncertainty in analytical precision near the limit of detection.

B. The following detected results are estimated (J8) due to calibration range exceedance.

- Methane in samples SG06SG002, SG06SG003, SG08SG002, SG08SG003, SG25SG001, SG25SG002 and SG25SG003

Analytes detected at concentrations exceeding the calibration range are quantitatively unreliable. The samples listed above were not appropriately diluted and reanalyzed.

Full Validation Criteria for Sample SG08SG002 and SG25SG001

III. Compound Quantitation and Reported Detection Limits

A. Sample results were recalculated, with the proper dilution factors and volumes used to calculate the sample results. The samples were found to be correctly quantitated. The reported detection limits were consistent with TtEMI's required report limits and reflect any dilutions and volumes used.

IV. System Performance

A. The samples were evaluated for baseline shifts, extraneous peaks, loss of resolution, and peak tailing. No system degradation was noted.

OVERALL ASSESSMENT OF DATA

I. Method Compliance and Additional Comments

A. Results reported on the laboratory hardcopy do not match the electronic data deliverable (EDD) due to rounding. The incorrect sample date was reported in the EDD for samples SG06SG004 and SG08SG002. The result reported in the EDD for NMOC and carbon dioxide for SG06SG004 have been corrected to reflect results reported on the laboratory hardcopy.

II. Usability

A. Due to high surrogate recovery in the TO-15 analyses, detected results for twenty-nine compounds in sample SG25SG003, detected results for twenty-seven compounds in sample SG25SG001, and detected results for twenty-six compounds in sample SG25SG002 were qualified as estimated. Due to internal standard problems, detected and nondetected results for compounds quantitated using chlorobenzene-d5 for three samples are qualified as estimated. Due to calibration range exceedance, detected hexane results for three samples are qualified as estimated. Samples exceeding the calibration range were appropriately diluted and reanalyzed. Due to common laboratory contamination, detected methylene chloride results for ten samples; detected 2-butanone results for four samples; and detected acetone results for two samples are qualified as nondetected.

B. Due to calibration range exceedance in the EPA Method 3C analyses detected methane results for three samples and detected carbon dioxide results for two samples are qualified as estimated. Samples exceeding the calibration range were not appropriately diluted and reanalyzed.

C. Due to calibration range exceedance in the EPA Method 25C analyses, detected methane results for seven samples were qualified as estimated. Samples exceeding the calibration range were not appropriately diluted and reanalyzed.

D. For the TO-15 analyses, samples SG25SG001, SG25SG002 and SG25SG003 exhibited low internal standard response for chlorobenzene-d5; reanalysis was performed at a dilution with internal standard response within limits.

E. Samples SG25SG001, SG25SG002 and SG25SG003 were reanalyzed for the TO-15 compounds due to low internal standard response. The sample was reanalyzed at a dilution with internal standard chlorobenzene-d5 within limits. The original analysis should be used as the final validated result for all compounds that are not quantitated using chlorobenzene-d5 and although the reporting limits will be higher, compounds quantitated using chlorobenzene-d5 should be used from the reanalysis.

F. The quality control criteria reviewed, other than those discussed above, were met and are considered acceptable. Sample results that were found to be rejected (R) are unusable for all purposes. Sample results that were found to be estimated (J) are usable for limited purposes only. Based upon the cursory and full data validation all other results are considered valid and usable for all purposes. In general, the absence of rejected data and the small number of qualifiers added to the data indicate high usability.

DATA VALIDATION REPORT{PRIVATE }

Site: Hunters Point Shipyard, Parcel E
Nonstandard Data Gaps Investigation
Contract Task Order (CTO) No.: DO 003
Laboratory: Atmospheric Analysis & Consulting, Inc.
Data Reviewer: ETHIX
Review Date: 5/15/02

Sample Delivery Group (SDG) No.: HAN05

Sample Nos.:	SG05SG001	SG05SG003	SG05SG005	SG07SG003
	SG05SG002	SG05SG004 *	SG07SG002	SGFBSG004

All samples were received intact and properly labeled.

*Full validation sample

Matrix: Air

Collection Dates: 3/28/02 and 3/29/02

The data were qualified according to the U.S. Environmental Protection Agency (EPA) documents "USEPA Contract Laboratory Program National Functional Guidelines for Organic Data Review" (October 1999) and "USEPA Contract Laboratory Program National Functional Guidelines For Inorganic Data Review" (February 1994). In addition, the Tetra Tech EM Inc. (TtEMI) documents "Data Validation Guidelines for CLP Organic Analyses," "Data Validation Guidelines for CLP Inorganic Analyses," "Data Validation Guidelines for Non-CLP Organic Analyses," "Data Validation Guidelines for Non-CLP Inorganic and Physical Analyses" (August 1, 2001), and the document entitled “TtEMI Comprehensive Long-term Environmental Action Navy II Analytical Services Statement of Work” (May 2000) were used along with other specified criteria in EPA methods. Data validation requirements are presented below.

I certify that all data validation criteria outlined in the above referenced documents were assessed, and any qualifications made to the data were in accordance with those documents.

Certified by

DATA VALIDATION REQUIREMENTS

Full validation includes all parameters listed below. Cursory validation parameters are indicated by an asterisk (*).

CLP Organic Parameters

* Holding times
GC/MS instrument performance check
* Initial and continuing calibrations
* Blanks
* Surrogate recovery
* Matrix spike/matrix spike duplicate
* Laboratory control sample or blank spike *
* Field duplicates
* Internal standard performance
Target compound identification
Tentatively identified compounds
Compound quantitation
Reported detection limits
System performance
* Overall assessment of data for the SDG

CLP Inorganic Parameters

* Holding times
* Initial and continuing calibrations
* Blanks
* Matrix spike
* Laboratory control sample or blank spike
Field duplicates
* Matrix duplicates
ICP interference check sample
GFAA quality control
* ICP serial dilution
Sample result verification
Analyte quantitation
Reported detection limits
* Overall assessment of data for the SDG

Non-CLP Organic and Inorganic Parameters

* Method compliance
* Holding times
* Initial and continuing calibrations
* Blanks
* Matrix spike/matrix spike duplicate
* Laboratory control sample or blank spike
* Field duplicates
* Matrix duplicates
* Surrogate recovery
Analyte quantitation
Reported detection limits
* Overall assessment of data for the SDG

DATA VALIDATION QUALIFIERS AND CODES

Data Validation Qualifiers and Codes

U1	Compound is nondetected due to laboratory blank contamination
U2	Compound is nondetected due to field blank contamination
U4	Compound is nondetected because of common laboratory contamination
J0	Compound is estimated due to internal standard exceedance
J1	Compound is estimated due to noncompliant instrument performance criteria
J2	Compound is estimated due to laboratory duplicate precision exceedance
J3	Compound is estimated due to surrogate/LCS/MS exceedance
J4	Compound is estimated due to serial dilution exceedance
J5	Compound is estimated due to holding time exceedance
J6	Compound is estimated due to field duplicate precision exceedance
J7	Compound is estimated due to calibration exceedance
J8	Compound is estimated due to calibration range exceedance
J9	Compound is estimated due to interference check exceedance (metals) or confirmation problems (dual column analyses)
UJ9	Compound is nondetected and estimated due to confirmation problems (dual column analyses)
R0	Compound is rejected due to internal standard exceedance
R1	Compound is rejected due to holding time exceedance
R2	Compound is rejected due to surrogate/LCS/MS exceedance
R3	Compound is rejected due to noncompliant instrument performance criteria
R7	Compound is rejected due to calibration exceedance

TABLE 1
CURSORY DATA VALIDATION SUMMARY

Analysis{PRIVATE }	Holding Times	Surrogates	MS/MSD	Matrix Duplicates	LCS	Blanks	Calibrations	Internal Standards	Field Duplicates	Other
TO-15	✓	pg. 6	✓	N/A	✓	pg. 6	✓	pg. 7	pg. 8	pg. 8
EPA 3C	✓	N/A	✓	N/A	✓	pg. 9	✓	N/A	pg. 9	pg. 9
EPA 25C	✓	N/A	✓	N/A	✓	✓	✓	N/A	pg. 11	pg. 11

Notes:
✓ indicates that all quality control criteria were met for the parameter as specified in the prescribed methods and data validation guidelines.
N/A indicates the parameter is not applicable to an analysis.
If criteria were not met and the data were qualified, a page number is indicated where the qualification is detailed.
The data were evaluated for all validation criteria and were found to be in control except where noted. Any outliers are described in the text.

TABLE 2
FULL DATA VALIDATION SUMMARY
Sample SG05SG004

Analysis{PRIVATE }	GC/MS Tuning	Target Compound List Identification	Compound or Analyte Quantification	Reported Detection Limits	Tentatively Identified Compounds	System Performance	Interference Check Sample	Graphite Furnace Quality Control
TO-15	✓	✓	✓	✓	N/A	✓	N/A	N/A
EPA 3C	N/A	N/A	✓	✓	N/A	✓	N/A	N/A
EPA 25C	N/A	N/A	✓	✓	N/A	✓	N/A	N/A

Notes:
✓ indicates that all quality control criteria were met for the parameter as specified in the prescribed methods and data validation guidelines.
N/A indicates the parameter is not applicable to an analysis.
If criteria were not met and the data were qualified, a page number is indicated where the qualification is detailed.
The data were evaluated for all validation criteria and were found to be in control except where noted. Any outliers found are described below.

DATA ASSESSMENT

TO-15 ANALYSIS

I. Surrogate Recovery

A. Due to surrogate recovery problems, the following detected results are qualified as estimated (J3).

- Propylene, dichlorodifluoromethane, 1,2-dichloro-1,1,2,2-tetrafluoroethane, vinyl chloride, 1,3-butadiene, chloroethane, ethanol, acetone, methylene chloride, carbon disulfide, t-1,2-dichloroethylene, 1,1-dichloroethane, cis-1,2-dichloroethene, hexane, benzene, cyclohexane, trichloroethene, heptane, toluene, tetrachloroethylene, ethylbenzene, m- & p-xylenes, styrene, o-xylene 4-ethyltoluene, 1,3,5-trimethylbenzene, 1,2,4-trimethylbenzene, 1,3-dichlorobenzene, 1,4-dichlorbenzene, 1,2-dichlorobenzene, 1,2,4-trichlorobenzene, and hexachlorbutadiene in sample SG05SG001

- Dichlorodifluoromethane, 1,2-dichloro-1,1,2,2-tetrafluoroethane, 1,3-butadiene, chloroethane, ethanol, methylene chloride, carbon disulfide, t-1,2-dichloroethylene, 1,1-dichloroethane, cis-1,2-dichloroethene, hexane, benzene, cyclohexane, heptane, m- & p-xylenes, and 1,2,4-trichlorobenzene in sample SG05SG003

The surrogates outside of QC limits are listed below.

Sample ID	Surrogate	% R	QC Limits
SG05SG001	BFB	128	75-125
SG05SG003	BFB	139	75-125

High percent recoveries indicate that detected results may be biased high.

II. Blank Contamination

A. Due to common laboratory contamination, the following results are considered nondetected (U4).

- acetone in samples SG07SG002 and SG05SG004
- methylene chloride in samples SGFBSG004, SG07SG002, SG07SG003, SG05SG003 and SG05SG004
- 2-Butanone in samples SG07SG003 and SG05SG002

Acetone, methylene chloride, and 2-butanone are considered common laboratory contaminants when found at levels less than 5x the CRQL in environmental samples and not found in the associated blanks.

B. Due to field blank contamination, the following results are considered nondetected (U2).

- dichlorodifluoromethane in samples SG05SG003 and SG05SG004
- chloromethane in sample SG07SG003
- ethanol in samples SG07SG003, SG05SG001 and SG05SG003
- acetone in samples SG07SG003, SG05SG001, SG05SG004 and SG05SG005
- methylene chloride in samples SG05SG001, SG05SG002 and SG05SG005
- carbon disulfide in samples SG05SG002, SG05SG003 and SG05SG004
- hexane in samples SG07SG003 and SG05SG004

The following analytes were detected in the associated field blank at the concentrations noted below.

Analyte	Blank ID	Concentration, ppbv
proplyene	SGFBSG004	4.6
dichlorodifluoromethane	SGFBSG004	1.1
chloromethane	SGFBSG004	1.0
ethanol	SGFBSG004	8.9
acetone	SGFBSG004	9.4
isopropyl alcohol	SGFBSG004	6.7
methylene chloride	SGFBSG004	5.7
carbon disulfide	SGFBSG004	0.7
hexane	SGFBSG004	4.7

Detected results less than 5x the maximum blank contamination were qualified.

III. Internal Standards

A. Due to internal standard problems, the following detected and nondetected results are qualified as estimated (J0/UJ0).

- All compounds quntitated using chlorobenzene-d5 in samples SG07SG002, SG07SG003, SG05SG001, SG05SG002, SG05SG003, SG05SG004 and SG05SG005

The internal standard area counts in the samples listed above were less than one half of the reference standard and are listed below.

Sample	Internal Standard	Value	QC Limits
SG07SG002	chlorobenzene-d5	2308065	3270154 – 13080616
SG07SG003	chlorobenzene-d5	2113811	3270154 – 13080616
SG05SG001	chlorobenzene-d5	2306324	3426081 – 13704326
SG05SG002	chlorobenzene-d5	2817721	3426081 – 13704326
SG05SG003	chlorobenzene-d5	3393904	3426081 – 13704326
SG05SG004	chlorobenzene-d5	3327843	3426081 – 13704326
SG05SG005	chlorobenzene-d5	3183950	3426081 – 13704326

Internal standard area counts of less than 50% of the standard area count may indicate a loss of instrument sensitivity.

IV. Field Duplicates

A. Field duplicates were not collected for analysis by this method.

V. Other Qualifications

A. The following results are qualified as estimated (J).

- All TO-14 detected results reported below the CRQL

Detected results reported below the CRQL are considered to be qualitatively acceptable, but quantitatively unreliable due to the uncertainty in analytical precision near the limit of detection.

Full Validation Criteria for Sample SG05SG004

VI. GC/MS Tuning

A. The ion abundance criteria were met for the bromofluorobenzene (BFB) GC/MS performance check. The sample was analyzed within 12 hours of the associated performance check.

VII. Target Compound List (TCL) Identification

A. The relative retention times, mass spectra, and peak identifications of the sample were evaluated. Target compound identification was considered to be correct.

VIII. Compound Quantitation and Reported Detection Limits

A. Sample results were recalculated with the proper dilution factors and volumes used to calculate the sample results. The sample was found to be correctly quantitated. The reported detection limits were consistent with TtEMI's required report limits and reflect any dilutions and volumes used.

IX. System Performance

A. The sample was evaluated for reconstructed ion chromatogram (RIC) baseline shifts, extraneous peaks, loss of resolution, and peak tailing. No system degradation was noted. Matrix interference was observed in the region of later eluting compounds. Retention times shifts observed in associated runs in QC analyzed.

EPA METHOD 3C ANALYSIS

I. Blank Contamination

A. Due to field blank contamination, the following results are considered nondetected (U2).

- oxygen in samples SG07SG002, SG07SG003, SG05SG001, SG05SG002, SG05SG003, SG05SG004 and SG05SG005
- nitrogen in samples SG07SG002, SG07SG003, SG05SG001, SG05SG002, SG05SG003, SG05SG004 and SG05SG005
- carbon dioxide in sample SG07SG003

The following analytes were detected in the associated field, trip, and equipment rinsate blanks at the concentrations noted below.

Compound	Blank ID	Concentration, %
Carbon dioxide	SGFBSG004	0.1
Oxygen	SGFBSG004	23
Nitrogen	SGFBSG004	81

Detected results less than 5x the maximum blank contamination were qualified.

II. Field Duplicates

A. Field duplicates were not collected for analysis by this method.

III. Other Qualifications

A. The following results are qualified as estimated (J).

- All EPA Method 3C detected results reported below the TtEMI required report limit (RL)

Detected results reported below the RL are considered to be qualitatively acceptable, but quantitatively unreliable due to the uncertainty in analytical precision near the limit of detection.

B. The following detected results are qualified as estimated (J8) due to calibration range exceedance.

- oxygen in sample SGFBSG004
- methane in sample SG05SG003

Analytes detected at concentrations exceeding the calibration range are quantitatively unreliable. The samples listed above were not appropriately diluted and reanalyzed.

IV. Compound Quantitation and Reported Detection Limits

A. Sample results were recalculated, with the proper dilution factors and volumes used to calculate the sample results. The samples were found to be correctly quantitated. The reported detection limits were consistent with TtEMI's required report limits and reflect any dilutions and volumes used.

V. System Performance

A. The samples were evaluated for baseline shifts, extraneous peaks, loss of resolution, and peak tailing. No system degradation was noted.

EPA METHOD 25C ANALYSIS

I. Field Duplicates

A. Field duplicates were not collected for analysis by this method.

II. Other Qualifications

B. The following detected results are qualified as estimated (J8) due to calibration range exceedance.

- methane in samples SG05SG001, SG05SG002, SG05SG003, SG05SG004 and SG05SG005

Analytes detected at concentrations exceeding the calibration range are quantitatively unreliable. The samples listed above were not appropriately diluted and reanalyzed.

Full Validation Criteria for Sample SG05SG004

III. Compound Quantitation and Reported Detection Limits

A. Sample results were recalculated, with the proper dilution factors and volumes used to calculate the sample results. The samples were found to be correctly quantitated. The reported detection limits were consistent with TtEMI's required report limits and reflect any dilutions and volumes used.

IV. System Performance

A. The samples were evaluated for baseline shifts, extraneous peaks, loss of resolution, and peak tailing. No system degradation was noted.

OVERALL ASSESSMENT OF DATA

I. Method Compliance and Additional Comments

A. Results reported on the laboratory hardcopy do not match the electronic data deliverable (EDD) due to rounding. In some cases low level detects were reported on the laboratory hardcopy but reported as nondetect in the EDD. For TO-15 analyses, dates on the Form Is and EDD were reported as analyzed one day prior to date displayed in the raw data. The results reported in the EDD for carbon dioxide and methane for SG07SG003, and carbon dioxide and oxygen for SGFBSG004 have been corrected to reflect results reported on the laboratory hardcopy.

B. For EPA Methods 3C and 25C, some compounds were reported outside calibration range but not diluted and reanalyzed.

C. The field blank was used as a matrix spike/matrix spike duplicate sample in all methods.

D. Low internal standard response for chlorobenzene-d5 was exhibited in the TO-15 analyses for seven samples and some of the associated method blanks indicating a problem with the internal standard concentration and may not be indicative of matrix problems. Internal standard noncompliance was not noted in the laboratory narrative. Evidence of reanalysis was not observed.

II. Usability

A. Due to high surrogate recoveries in the TO-15 analyses, detected results in sample SG05SG001 and SG05SG003 are qualified as estimated. Due to common laboratory contamination, detected 2-butanone and acetone results for two samples, and detected methylene chloride results for five samples are qualified as nondetected. Due to field blank contamination, detected acetone results for four samples; detected ethanol, methylene chloride, and carbon disulfide results for three samples; detected dichlorodifluoromethane and hexane results for two samples; and detected chloromethane results for one sample are qualified as nondetected.

B. Due to calibration range exceedance in the EPA Method 3C, detected oxygen and methane for one sample are qualified as estimated. Due to field blank contamination, detected nitrogen and oxygen results for seven samples, and the detected carbon dioxide result for one sample are qualified as nondetected.

C. Due to calibration range exceedance in the EPA Method 25C, detected methane results for six samples are qualified as estimated.

D. The quality control criteria reviewed, other than those discussed above, were met and are considered acceptable. Sample results that were found to be rejected (R) are unusable for all purposes. Sample results that were found to be estimated (J) are usable for limited purposes only. Based upon the cursory and full data validation all other results are considered valid and usable for all purposes. In general, the absence of rejected data and the small number of qualifiers added to the data indicate high usability. The high number of qualifications made to the TO-15 data indicate several analytical and/or matrix problems that limit the usability of the data.

DATA VALIDATION REPORT{PRIVATE }

Site:	Hunters Point Shipyard, Parcel E Nonstandard Data Gaps Investigation
Contract Task Order (CTO) No.: DO 003	
Laboratory:	Atmospheric Analysis & Consulting, Inc.
Data Reviewer:	ETHIX
Review Date:	5/16/02

Sample Delivery Group (SDG) No.: HAN06

Sample Nos.:	SG02SG001	SG02SG001DL	SG02SG002 *	SG02SG002DL
	SG25SG004	SG25SG005	SG25SG005DL	SG25SG006 *
	SG25SG006DL	SG25SG007	SG25SG007DL	SGFBSG005
	SGFBSG006			

All samples were received intact and properly labeled.

* Full Validation Sample

Matrix: Air

Collection Dates: 3/28/02, 3/29/02 and 4/1/02

The data were qualified according to the U.S. Environmental Protection Agency (EPA) documents "USEPA Contract Laboratory Program National Functional Guidelines for Organic Data Review" (October 1999) and "USEPA Contract Laboratory Program National Functional Guidelines For Inorganic Data Review" (February 1994). In addition, the Tetra Tech EM Inc. (TtEMI) documents "Data Validation Guidelines for CLP Organic Analyses," "Data Validation Guidelines for CLP Inorganic Analyses," "Data Validation Guidelines for Non-CLP Organic Analyses," "Data Validation Guidelines for Non-CLP Inorganic and Physical Analyses" (August 1, 2001), and the document entitled “TtEMI Comprehensive Long-term Environmental Action Navy II Analytical Services Statement of Work” (May 2000) were used along with other specified criteria in EPA methods. Data validation requirements are presented below.

I certify that all data validation criteria outlined in the above referenced documents were assessed, and any qualifications made to the data were in accordance with those documents.

Certified by

DATA VALIDATION REQUIREMENTS

Full validation includes all parameters listed below. Cursory validation parameters are indicated by an asterisk (*).

CLP Organic Parameters

* Holding times
  GC/MS instrument performance check
* Initial and continuing calibrations
* Blanks
* Surrogate recovery
* Matrix spike/matrix spike duplicate
* Laboratory control sample or blank spike *
* Field duplicates
* Internal standard performance
  Target compound identification
  Tentatively identified compounds
  Compound quantitation
  Reported detection limits
  System performance
* Overall assessment of data for the SDG

CLP Inorganic Parameters

* Holding times
* Initial and continuing calibrations
* Blanks
* Matrix spike
* Laboratory control sample or blank spike
Field duplicates
* Matrix duplicates
  ICP interference check sample
  GFAA quality control
* ICP serial dilution
  Sample result verification
  Analyte quantitation
  Reported detection limits
* Overall assessment of data for the SDG

Non-CLP Organic and Inorganic Parameters

* Method compliance
* Holding times
* Initial and continuing calibrations
* Blanks
* Matrix spike/matrix spike duplicate
* Laboratory control sample or blank spike
* Field duplicates
* Matrix duplicates
* Surrogate recovery
  Analyte quantitation
  Reported detection limits
* Overall assessment of data for the SDG

DATA VALIDATION QUALIFIERS AND CODES

Data Validation Qualifiers and Codes

U1	Compound is nondetected due to laboratory blank contamination
U2	Compound is nondetected due to field blank contamination
U4	Compound is nondetected because of common laboratory contamination
J0	Compound is estimated due to internal standard exceedance
J1	Compound is estimated due to noncompliant instrument performance criteria
J2	Compound is estimated due to laboratory duplicate precision exceedance
J3	Compound is estimated due to surrogate/LCS/MS exceedance
J4	Compound is estimated due to serial dilution exceedance
J5	Compound is estimated due to holding time exceedance
J6	Compound is estimated due to field duplicate precision exceedance
J7	Compound is estimated due to calibration exceedance
J8	Compound is estimated due to calibration range exceedance
J9	Compound is estimated due to interference check exceedance (metals) or confirmation problems (dual column analyses)
UJ9	Compound is nondetected and estimated due to confirmation problems (dual column analyses)
R0	Compound is rejected due to internal standard exceedance
R1	Compound is rejected due to holding time exceedance
R2	Compound is rejected due to surrogate/LCS/MS exceedance
R3	Compound is rejected due to noncompliant instrument performance criteria
R7	Compound is rejected due to calibration exceedance

TABLE 1
CURSORY DATA VALIDATION SUMMARY

Analysis{PRIVATE}	Holding Times	Surrogates	MS/MSD	Matrix Duplicates	LCS	Blanks	Calibrations	Internal Standards	Field Duplicates	Other
TO-15	✓	Pg. 6	✓	N/A	✓	Pg. 6	✓	✓	Pg. 8	Pg. 8
EPA 3C	✓	N/A	✓	N/A	✓	Pg. 10	✓	N/A	Pg. 10	Pg. 10
EPA 25C	✓	N/A	✓	N/A	✓	✓	✓	N/A	Pg. 10	Pg. 10

Notes:
✓ indicates that all quality control criteria were met for the parameter as specified in the prescribed methods and data validation guidelines.
N/A indicates the parameter is not applicable to an analysis.
If criteria were not met and the data were qualified, a page number is indicated where the qualification is detailed.
The data were evaluated for all validation criteria and were found to be in control except where noted. Any outliers are described in the text.

TABLE 2
FULL DATA VALIDATION SUMMARY
Sample SG02SG002 and SG25SG006

Analysis{PRIVATE }	GC/MS Tuning	Target Compound List Identification	Compound or Analyte Quantification	Reported Detection Limits	Tentatively Identified Compounds	System Performance	Interference Check Sample	Graphite Furnace Quality Control
TO-15	✓	✓	✓	✓	N/A	✓	N/A	N/A
EPA 3C	N/A	N/A	✓	✓	N/A	✓	N/A	N/A
EPA 25C	N/A	N/A	✓	✓	N/A	✓	N/A	N/A

Notes:
✓ indicates that all quality control criteria were met for the parameter as specified in the prescribed methods and data validation guidelines.
N/A indicates the parameter is not applicable to an analysis.
If criteria were not met and the data were qualified, a page number is indicated where the qualification is detailed.
The data were evaluated for all validation criteria and were found to be in control except where noted. Any outliers found are described below.

DATA ASSESSMENT

TO-15 ANALYSIS

I. Surrogate Recovery

A. Due to surrogate recovery problems, the following detected results are qualified as estimated (J3).

- 1,1-dichloroethane, 1,2-dichloro-1,1,2,2-tetrafluoroethane, 1,2-dichloroethane, 1,3,5-trimethylbenzene,1,4-dichlorobenzene, benzene, cis-1,2-dichloroethene, dichlorodifluoromethane, heptane, hexane, m,p-xylenes, methylene chloride, o-xylene, propylene, t-1,2-dichloroethylene, toluene and vinyl chloride in samples SG02SG001, SG02SG002, SG25SG005 and SG25SG006
- 1,2,4-trimethylbenzene, ethylbenzene in samples SG02SG001, SG25SG005 and SG25SG006
- 4-ethyltoluene and cyclohexane in samples SG02SG001, SG02SG002 and SG25SG005
- chloroethane in samples SG02SG002, SG25SG005 and SG25SG006
- 1,2-dichlorobenzene, 1,2-dichloropropane, 1,3-dichlorobenzene, carbon disulfide, chlorobenzene and ethanol in samples SG02SG001 and SG02SG002
- chloromethane in samples SG02SG002 and SG25SG005
- trichloroethene in sample SG25SG005 and SG25SG006
- 2- butanone, acetone, bromomethane and tetrahydrofuran in sample SG02SG001
- tetrachloroethylene in sample SG25SG005
- carbon tetrachloride in sample SG25SG006
- 1,1,2-trichloro-1,2,2-trifluoroethane in sample SG02SG002

The surrogates outside of QC limits are listed below.

Sample ID	Surrogate	% R	QC Limits
SG02SG001	4-bromofluorobenzene	164	75-125
SG02SG002	4-bromofluorobenzene	229	75-125
SG25SG005	4-bromofluorobenzene	229	75-125
SG25SG006	4-bromofluorobenzene	221	75-125

High percent recoveries indicate that detected results may be biased high.

II. Blank Contamination

A. Due to common laboratory contamination, the following results are considered nondetected (U4).

- acetone in samples SG02SG001, SG25SG007DL, SGFBSG005 and SGFBSG006
- methylene chloride in samples SG02SG001, SG02SG001DL, SG02SG002, SG02SG002DL, SG25SG005DL, SG25SG006, SG25SG006DL, SG25SG007, SG25SG007DL, SGFBSG005 and SGFBSG006
- 2-butanone in sample SG25SG007

Acetone, methylene chloride, and 2-butanone are considered common laboratory contaminants when found at levels less than 5x the CRQL in environmental samples and not found in the associated blanks.

B. Due to method blank contamination, the following results are considered nondetected (U1).

- propylene in samples SGFBSG005, SGFBSG006 and SG25SG004

The following compounds were detected in the associated method blanks at the concentrations noted below.

Compound	Blank ID	Concentration, ppbv
Propylene	MBA040702-1	0.86

Detected results less than 5x the blank contamination were qualified.

C. Due to field blank contamination, the following results are considered nondetected (U2).

- acetone in samples SG25SG004 and SG25SG007
- chloromethane in samples SG02SG001DL, SG02SG002DL, SG25SG004, SG25SG005DL, SG25SG006DL, SG25SG007 and SG25SG007DL
- dichlorodifluoromethane in samples SG02SG001, SG25SG004 and SG25SG007
- hexachlorobutadiene in samples SG02SG001DL, SG02SG002DL, SG25SG005DL, SG25SG006DL and SG25SG007DL
- hexane in sample SG25SG007
- toluene in samples SG02SG001, SG02SG001DL, SG02SG002, SG02SG002DL, SG25SG006 and SG25SG006DL

The following analytes were detected in the associated field blanks at the concentrations noted below.

Analyte	Blank ID	Concentration, ppbv
Acetone	SGFBSG006	3.1
Chloromethane	SGFBSG005	0.8
Dichlorodifluoromethane	SGFBSG005	0.8
hexachlorobutadiene	SGFBSG005	0.7
hexane	SGFBSG006	0.9
toluene	SGFBSG006	1

Detected results less than 5x or 10x the maximum blank contamination were qualified.

III. Field Duplicates

A. The following RPDs were obtained for the field duplicate samples SG25SG005 / SG25SG006:

- 51% for propylene
- 16% for dichlorodifluoromethane
- NQ for chloromethane
- 17% for 1,2-dichloro-1,1,2,2-tetrafluoroethane
- 11% for vinyl chloride
- 23% for chloroethane
- 104% for methylene chloride
- 6% for t-1,2-dichloroethylene
- 2% for 1,1-dichloroethane
- 5% for cis-1,2-dichloroethene
- 1% for hexane
- 10% for 1,2-dichloroethane
- 13% for benzene
- NQ for carbon tetrachloride
- NQ for cyclohexane
- 182% for trichloroethene
- 5% for heptane
- 162% for toluene
- NQ for tetrachloroethylene
- 27% for ethylbenzene
- 97% for m,p-xylenes
- 143% for o-xylene
- NQ for 4-ethyltoluene
- 96% for 1,3,5-trimethylbenzene
- 35% for 1,2,4-trimethylbenzene
- 12% for 1,4-dichlorobenzene

For air samples, the field RPD guideline is $\pm$ 30%. The data are not qualified on the basis of field duplicate results.

IV. Other Qualifications

A. The following results are qualified as estimated (J).

- All TO-15 detected results reported below the CRQL

Detected results reported below the CRQL are considered to be qualitatively acceptable, but quantitatively unreliable due to the uncertainty in analytical precision near the limit of detection.

B. The following detected results are qualified as estimated (J8) due to calibration range exceedance.

- hexane in samples SG02SG001 and SG02SG002

Analytes detected at concentrations exceeding the calibration range are quantitatively unreliable. The samples listed above were appropriately diluted and reanalyzed.

Full Validation Criteria for Samples SG02SG002 and SG25SG006

V. GC/MS Tuning

A. The ion abundance criteria were met for the bromofluorobenzene (BFB) GC/MS performance check. The samples were analyzed within 12 hours of the associated performance check.

VI. Target Compound List (TCL) Identification

A. The relative retention times, mass spectra, and peak identifications of the samples were evaluated. Target compound identification was considered to be correct.

VII. Compound Quantitation and Reported Detection Limits

A. Sample results were recalculated with the proper dilution factors and volumes used to calculate the sample results. The samples were found to be correctly quantitated. The reported detection limits were consistent with TtEMI's required report limits and reflect any dilutions and volumes used.

IX. System Performance

A. The samples were evaluated for reconstructed ion chromatogram (RIC) baseline shifts, extraneous peaks, loss of resolution, and peak tailing. No system degradation was noted.

EPA METHOD 3C ANALYSIS

I. Blank Contamination

A. Due to field blank contamination, the following results are considered nondetected (U2).

- nitrogen in samples SG02SG001, SG02SG002, SG25SG004, SG25SG005, SG25SG006 and SG25SG007
- oxygen in samples SG02SG001, SG02SG002, SG25SG004, SG25SG005, SG25SG006 and SG25SG007

The following analytes were detected in the associated field blanks at the concentrations noted below.

Compound	Blank ID	Concentration, %
nitrogen	SGFBSG005	81
oxygen	SGFBSG005	19

Detected results less than 5x the maximum blank contamination were qualified.

II. Other Qualifications

A. The following results are qualified as estimated (J).

- Carbon dioxide for SGFBSG006 was reported below the TtEMI required report limit (RL)

Detected results reported below the RL are considered to be qualitatively acceptable, but quantitatively unreliable due to the uncertainty in analytical precision near the limit of detection.

B. The following detected results are qualified as estimated (J8) due to calibration range exceedance.

- carbon dioxide in samples SG02SG002, SG25SG004 and SG25SG006
- oxygen in sample SGFBSG005 and SGFBSG006
- methane in sample SG02SG002, SG25SG004, SG25SG005 and SG25SG006

Analytes detected at concentrations exceeding the calibration range are quantitatively unreliable. The samples listed above were not appropriately diluted and reanalyzed.

III. Field Duplicates

A. The following RPDs were obtained for the field duplicate samples SG25SG005 / SG25SG006:

- 40% for oxygen
- 30% for nitrogen
- 5% for methane
- 9% for carbon dioxide

For air samples, the field RPD guideline is ± 30. The data are not qualified on the basis of field duplicate results.

Full Validation Criteria for Samples SG02SG002 and SG25SG006

IV. Compound Quantitation and Reported Detection Limits

A. Sample results were recalculated, with the proper dilution factors and volumes used to calculate the sample results. The samples were found to be correctly quantitated. The reported detection limits were consistent with TtEMI's required report limits and reflect any dilutions and volumes used.

V. System Performance

A. The samples were evaluated for baseline shifts, extraneous peaks, loss of resolution, and peak tailing. No system degradation was noted.

EPA METHOD 25C ANALYSIS

I. Other Qualifications

A. The following detected results are qualified as estimated (J8) due to calibration range exceedance.

- methane in samples SG02SG001, SG02SG002, SG25SG004, SG25SG005, SG25SG006 and SG25SG007

Analytes detected at concentrations exceeding the calibration range are quantitatively unreliable. The samples listed above were not appropriately diluted and reanalyzed.

II. Field Duplicates

A. The following RPDs were obtained for the field duplicate samples SG01SG004 / SG01SG005:

- 6% for methane
- 4% for NMOC

For air samples, the field RPD guideline is ± 30%. The data are not qualified on the basis of field duplicate results.

Full Validation Criteria for Sample SG02SG002 and SG25SG006

III. Compound Quantitation and Reported Detection Limits

A. Sample results were recalculated, with the proper dilution factors and volumes used to calculate the sample results. The samples were found to be correctly quantitated. The reported detection limits were consistent with TtEMI's required report limits and reflect any dilutions and volumes used.

IV. System Performance

A. The samples were evaluated for baseline shifts, extraneous peaks, loss of resolution, and peak tailing. No system degradation was noted.

OVERALL ASSESSMENT OF DATA

I. Method Compliance and Additional Comments

A. Some results reported on the laboratory hardcopy do not match the electronic data deliverable (EDD) due to rounding. The result reported in the EDD for NMOC for SG25SG005 has been corrected to reflect the result reported on the laboratory hardcopy. For sample SG25SG004, oxygen was qualified as "E" in the EDD; however, the hardcopy did not indicate calibration range exceedance for this compound, therefore oxygen has not been flagged (J8) for this sample.

B. Methane values analyzed by method EPA 25C exceeding the calibration range for samples SG02SG001, SG02SG002, SG25SG005, SG25SG006 and SG25SG007 were obtained from EPA Method 3C.

C. Field blanks were used as matrix spike/matrix spike duplicate samples.

II. Usability

A. Due to high surrogate recovery in the TO-15 analyses, detected results for four samples are qualified as estimated. Due to calibration range exceedance, detected hexane results for two samples are qualified as estimated. Due to common laboratory contamination, detected methylene chloride results for six samples and five dilutions; detected acetone results for three samples; and the detected 2-butanone result for one sample are qualified as nondetected. Due to method blank contamination, detected propylene results for three samples are qualified as nondetected. Due to field blank contamination, detected chloromethane results for two samples and four dilutions; detected dichlorodifluoromethane results for three samples; detected hexachlorobutadiene results for five dilutions; the detected hexane result for one sample; and detected toluene results for three samples and three dilutions are qualified as nondetected.

B. Due to calibration range exceedance in the EPA Method 3C analyses, methane results for four samples, carbon dioxide results for three samples, and the oxygen result for one sample are qualified as estimated. Due to field blank contamination, detected nitrogen and oxygen results for six samples are qualified as nondetected.

C. Due to calibration range exceedance in the EPA Method 25C, methane results for six samples are qualified as estimated.

D. Samples SG02SG001, SG02SG002, SG25SG005, SG25SG006 and SG25SG007 were diluted and reanalyzed for the TO-15 analysis due to matrix interference. The re-extracted samples exhibited similar surrogate recovery problems. The original analysis should be used as the final validated result due to better surrogate recovery.

E. The quality control criteria reviewed, other than those discussed above, were met and are considered acceptable. Sample results that were found to be rejected (R) are unusable for all purposes. Sample results that were found to be estimated (J) are usable for limited purposes only. Based upon the cursory and full data validation all other results are considered valid and usable for all purposes. The high number of qualifications made to the data indicate several analytical and/or matrix problems that limit the usability of the data.

DATA VALIDATION REPORT{PRIVATE }

Site:	Hunters Point Shipyard, Parcel E Nonstandard Data Gaps Investigation
Contract Task Order (CTO) No.: DO 003	
Laboratory:	Atmospheric Analysis & Consulting, Inc.
Data Reviewer:	ETHIX
Review Date:	5/16/02

Sample Delivery Group (SDG) No.: HAN06

Sample Nos.:	SG02SG001	SG02SG001DL	SG02SG002 *	SG02SG002DL
	SG25SG004	SG25SG005	SG25SG005DL	SG25SG006 *
	SG25SG006DL	SG25SG007	SG25SG007DL	SGFBSG005
	SGFBSG006			

All samples were received intact and properly labeled.

* Full Validation Sample

Matrix: Air

Collection Dates: 3/28/02, 3/29/02 and 4/1/02

The data were qualified according to the U.S. Environmental Protection Agency (EPA) documents "USEPA Contract Laboratory Program National Functional Guidelines for Organic Data Review" (October 1999) and "USEPA Contract Laboratory Program National Functional Guidelines For Inorganic Data Review" (February 1994). In addition, the Tetra Tech EM Inc. (TtEMI) documents "Data Validation Guidelines for CLP Organic Analyses," "Data Validation Guidelines for CLP Inorganic Analyses," "Data Validation Guidelines for Non-CLP Organic Analyses," "Data Validation Guidelines for Non-CLP Inorganic and Physical Analyses" (August 1, 2001), and the document entitled “TtEMI Comprehensive Long-term Environmental Action Navy II Analytical Services Statement of Work” (May 2000) were used along with other specified criteria in EPA methods. Data validation requirements are presented below.

I certify that all data validation criteria outlined in the above referenced documents were assessed, and any qualifications made to the data were in accordance with those documents.

Certified by

DATA VALIDATION REQUIREMENTS

Full validation includes all parameters listed below. Cursory validation parameters are indicated by an asterisk (*).

CLP Organic Parameters

* Holding times
  GC/MS instrument performance check
* Initial and continuing calibrations
* Blanks
* Surrogate recovery
* Matrix spike/matrix spike duplicate
* Laboratory control sample or blank spike *
* Field duplicates
* Internal standard performance
  Target compound identification
  Tentatively identified compounds
  Compound quantitation
  Reported detection limits
  System performance
* Overall assessment of data for the SDG

CLP Inorganic Parameters

* Holding times
* Initial and continuing calibrations
* Blanks
* Matrix spike
* Laboratory control sample or blank spike
Field duplicates
* Matrix duplicates
  ICP interference check sample
  GFAA quality control
* ICP serial dilution
  Sample result verification
  Analyte quantitation
  Reported detection limits
* Overall assessment of data for the SDG

Non-CLP Organic and Inorganic Parameters

* Method compliance
* Holding times
* Initial and continuing calibrations
* Blanks
* Matrix spike/matrix spike duplicate
* Laboratory control sample or blank spike
* Field duplicates
* Matrix duplicates
* Surrogate recovery
  Analyte quantitation
  Reported detection limits
* Overall assessment of data for the SDG

DATA VALIDATION QUALIFIERS AND CODES

Data Validation Qualifiers and Codes

U1	Compound is nondetected due to laboratory blank contamination
U2	Compound is nondetected due to field blank contamination
U4	Compound is nondetected because of common laboratory contamination
J0	Compound is estimated due to internal standard exceedance
J1	Compound is estimated due to noncompliant instrument performance criteria
J2	Compound is estimated due to laboratory duplicate precision exceedance
J3	Compound is estimated due to surrogate/LCS/MS exceedance
J4	Compound is estimated due to serial dilution exceedance
J5	Compound is estimated due to holding time exceedance
J6	Compound is estimated due to field duplicate precision exceedance
J7	Compound is estimated due to calibration exceedance
J8	Compound is estimated due to calibration range exceedance
J9	Compound is estimated due to interference check exceedance (metals) or confirmation problems (dual column analyses)
UJ9	Compound is nondetected and estimated due to confirmation problems (dual column analyses)
R0	Compound is rejected due to internal standard exceedance
R1	Compound is rejected due to holding time exceedance
R2	Compound is rejected due to surrogate/LCS/MS exceedance
R3	Compound is rejected due to noncompliant instrument performance criteria
R7	Compound is rejected due to calibration exceedance

TABLE 1
CURSORY DATA VALIDATION SUMMARY

Analysis{PRIVATE}	Holding Times	Surrogates	MS/MSD	Matrix Duplicates	LCS	Blanks	Calibrations	Internal Standards	Field Duplicates	Other
TO-15	✓	Pg. 6	✓	N/A	✓	Pg. 6	✓	✓	Pg. 8	Pg. 8
EPA 3C	✓	N/A	✓	N/A	✓	Pg. 10	✓	N/A	Pg. 10	Pg. 10
EPA 25C	✓	N/A	✓	N/A	✓	✓	✓	N/A	Pg. 10	Pg. 10

Notes:
✓ indicates that all quality control criteria were met for the parameter as specified in the prescribed methods and data validation guidelines.
N/A indicates the parameter is not applicable to an analysis.
If criteria were not met and the data were qualified, a page number is indicated where the qualification is detailed.
The data were evaluated for all validation criteria and were found to be in control except where noted. Any outliers are described in the text.

TABLE 2
FULL DATA VALIDATION SUMMARY
Sample SG02SG002 and SG25SG006

Analysis{PRIVATE }	GC/MS Tuning	Target Compound List Identification	Compound or Analyte Quantification	Reported Detection Limits	Tentatively Identified Compounds	System Performance	Interference Check Sample	Graphite Furnace Quality Control
TO-15	✓	✓	✓	✓	N/A	✓	N/A	N/A
EPA 3C	N/A	N/A	✓	✓	N/A	✓	N/A	N/A
EPA 25C	N/A	N/A	✓	✓	N/A	✓	N/A	N/A

Notes:
✓ indicates that all quality control criteria were met for the parameter as specified in the prescribed methods and data validation guidelines.
N/A indicates the parameter is not applicable to an analysis.
If criteria were not met and the data were qualified, a page number is indicated where the qualification is detailed.
The data were evaluated for all validation criteria and were found to be in control except where noted. Any outliers found are described below.

DATA ASSESSMENT

TO-15 ANALYSIS

I. Surrogate Recovery

A. Due to surrogate recovery problems, the following detected results are qualified as estimated (J3).

- 1,1-dichloroethane, 1,2-dichloro-1,1,2,2-tetrafluoroethane, 1,2-dichloroethane, 1,3,5-trimethylbenzene,1,4-dichlorobenzene, benzene, cis-1,2-dichloroethene, dichlorodifluoromethane, heptane, hexane, m,p-xylenes, methylene chloride, o-xylene, propylene, t-1,2-dichloroethylene, toluene and vinyl chloride in samples SG02SG001, SG02SG002, SG25SG005 and SG25SG006
- 1,2,4-trimethylbenzene, ethylbenzene in samples SG02SG001, SG25SG005 and SG25SG006
- 4-ethyltoluene and cyclohexane in samples SG02SG001, SG02SG002 and SG25SG005
- chloroethane in samples SG02SG002, SG25SG005 and SG25SG006
- 1,2-dichlorobenzene, 1,2-dichloropropane, 1,3-dichlorobenzene, carbon disulfide, chlorobenzene and ethanol in samples SG02SG001 and SG02SG002
- chloromethane in samples SG02SG002 and SG25SG005
- trichloroethene in sample SG25SG005 and SG25SG006
- 2- butanone, acetone, bromomethane and tetrahydrofuran in sample SG02SG001
- tetrachloroethylene in sample SG25SG005
- carbon tetrachloride in sample SG25SG006
- 1,1,2-trichloro-1,2,2-trifluoroethane in sample SG02SG002

The surrogates outside of QC limits are listed below.

Sample ID	Surrogate	% R	QC Limits
SG02SG001	4-bromofluorobenzene	164	75-125
SG02SG002	4-bromofluorobenzene	229	75-125
SG25SG005	4-bromofluorobenzene	229	75-125
SG25SG006	4-bromofluorobenzene	221	75-125

High percent recoveries indicate that detected results may be biased high.

II. Blank Contamination

A. Due to common laboratory contamination, the following results are considered nondetected (U4).

- acetone in samples SG02SG001, SG25SG007DL, SGFBSG005 and SGFBSG006
- methylene chloride in samples SG02SG001, SG02SG001DL, SG02SG002, SG02SG002DL, SG25SG005DL, SG25SG006, SG25SG006DL, SG25SG007, SG25SG007DL, SGFBSG005 and SGFBSG006
- 2-butanone in sample SG25SG007

Acetone, methylene chloride, and 2-butanone are considered common laboratory contaminants when found at levels less than 5x the CRQL in environmental samples and not found in the associated blanks.

B. Due to method blank contamination, the following results are considered nondetected (U1).

- propylene in samples SGFBSG005, SGFBSG006 and SG25SG004

The following compounds were detected in the associated method blanks at the concentrations noted below.

Compound	Blank ID	Concentration, ppbv
Propylene	MBA040702-1	0.86

Detected results less than 5x the blank contamination were qualified.

C. Due to field blank contamination, the following results are considered nondetected (U2).

- acetone in samples SG25SG004 and SG25SG007
- chloromethane in samples SG02SG001DL, SG02SG002DL, SG25SG004, SG25SG005DL, SG25SG006DL, SG25SG007 and SG25SG007DL
- dichlorodifluoromethane in samples SG02SG001, SG25SG004 and SG25SG007
- hexachlorobutadiene in samples SG02SG001DL, SG02SG002DL, SG25SG005DL, SG25SG006DL and SG25SG007DL
- hexane in sample SG25SG007
- toluene in samples SG02SG001, SG02SG001DL, SG02SG002, SG02SG002DL, SG25SG006 and SG25SG006DL

The following analytes were detected in the associated field blanks at the concentrations noted below.

Analyte	Blank ID	Concentration, ppbv
Acetone	SGFBSG006	3.1
Chloromethane	SGFBSG005	0.8
Dichlorodifluoromethane	SGFBSG005	0.8
hexachlorobutadiene	SGFBSG005	0.7
hexane	SGFBSG006	0.9
toluene	SGFBSG006	1

Detected results less than 5x or 10x the maximum blank contamination were qualified.

III. Field Duplicates

A. The following RPDs were obtained for the field duplicate samples SG25SG005 / SG25SG006:

- 51% for propylene
- 16% for dichlorodifluoromethane
- NQ for chloromethane
- 17% for 1,2-dichloro-1,1,2,2-tetrafluoroethane
- 11% for vinyl chloride
- 23% for chloroethane
- 104% for methylene chloride
- 6% for t-1,2-dichloroethylene
- 2% for 1,1-dichloroethane
- 5% for cis-1,2-dichloroethene
- 1% for hexane
- 10% for 1,2-dichloroethane
- 13% for benzene
- NQ for carbon tetrachloride
- NQ for cyclohexane
- 182% for trichloroethene
- 5% for heptane
- 162% for toluene
- NQ for tetrachloroethylene
- 27% for ethylbenzene
- 97% for m,p-xylenes
- 143% for o-xylene
- NQ for 4-ethyltoluene
- 96% for 1,3,5-trimethylbenzene
- 35% for 1,2,4-trimethylbenzene
- 12% for 1,4-dichlorobenzene

For air samples, the field RPD guideline is $\pm$ 30%. The data are not qualified on the basis of field duplicate results.

IV. Other Qualifications

A. The following results are qualified as estimated (J).

- All TO-15 detected results reported below the CRQL

Detected results reported below the CRQL are considered to be qualitatively acceptable, but quantitatively unreliable due to the uncertainty in analytical precision near the limit of detection.

B. The following detected results are qualified as estimated (J8) due to calibration range exceedance.

- hexane in samples SG02SG001 and SG02SG002

Analytes detected at concentrations exceeding the calibration range are quantitatively unreliable. The samples listed above were appropriately diluted and reanalyzed.

Full Validation Criteria for Samples SG02SG002 and SG25SG006

V. GC/MS Tuning

A. The ion abundance criteria were met for the bromofluorobenzene (BFB) GC/MS performance check. The samples were analyzed within 12 hours of the associated performance check.

VI. Target Compound List (TCL) Identification

A. The relative retention times, mass spectra, and peak identifications of the samples were evaluated. Target compound identification was considered to be correct.

VII. Compound Quantitation and Reported Detection Limits

A. Sample results were recalculated with the proper dilution factors and volumes used to calculate the sample results. The samples were found to be correctly quantitated. The reported detection limits were consistent with TtEMI's required report limits and reflect any dilutions and volumes used.

IX. System Performance

A. The samples were evaluated for reconstructed ion chromatogram (RIC) baseline shifts, extraneous peaks, loss of resolution, and peak tailing. No system degradation was noted.

EPA METHOD 3C ANALYSIS

I. Blank Contamination

A. Due to field blank contamination, the following results are considered nondetected (U2).

- nitrogen in samples SG02SG001, SG02SG002, SG25SG004, SG25SG005, SG25SG006 and SG25SG007
- oxygen in samples SG02SG001, SG02SG002, SG25SG004, SG25SG005, SG25SG006 and SG25SG007

The following analytes were detected in the associated field blanks at the concentrations noted below.

Compound	Blank ID	Concentration, %
nitrogen	SGFBSG005	81
oxygen	SGFBSG005	19

Detected results less than 5x the maximum blank contamination were qualified.

II. Other Qualifications

A. The following results are qualified as estimated (J).

- Carbon dioxide for SGFBSG006 was reported below the TtEMI required report limit (RL)

Detected results reported below the RL are considered to be qualitatively acceptable, but quantitatively unreliable due to the uncertainty in analytical precision near the limit of detection.

B. The following detected results are qualified as estimated (J8) due to calibration range exceedance.

- carbon dioxide in samples SG02SG002, SG25SG004 and SG25SG006
- oxygen in sample SGFBSG005 and SGFBSG006
- methane in sample SG02SG002, SG25SG004, SG25SG005 and SG25SG006

Analytes detected at concentrations exceeding the calibration range are quantitatively unreliable. The samples listed above were not appropriately diluted and reanalyzed.

III. Field Duplicates

A. The following RPDs were obtained for the field duplicate samples SG25SG005 / SG25SG006:

- 40% for oxygen
- 30% for nitrogen
- 5% for methane
- 9% for carbon dioxide

For air samples, the field RPD guideline is ± 30. The data are not qualified on the basis of field duplicate results.

Full Validation Criteria for Samples SG02SG002 and SG25SG006

IV. Compound Quantitation and Reported Detection Limits

A. Sample results were recalculated, with the proper dilution factors and volumes used to calculate the sample results. The samples were found to be correctly quantitated. The reported detection limits were consistent with TtEMI's required report limits and reflect any dilutions and volumes used.

V. System Performance

A. The samples were evaluated for baseline shifts, extraneous peaks, loss of resolution, and peak tailing. No system degradation was noted.

EPA METHOD 25C ANALYSIS

I. Other Qualifications

A. The following detected results are qualified as estimated (J8) due to calibration range exceedance.

- methane in samples SG02SG001, SG02SG002, SG25SG004, SG25SG005, SG25SG006 and SG25SG007

Analytes detected at concentrations exceeding the calibration range are quantitatively unreliable. The samples listed above were not appropriately diluted and reanalyzed.

II. Field Duplicates

A. The following RPDs were obtained for the field duplicate samples SG01SG004 / SG01SG005:

- 6% for methane
- 4% for NMOC

For air samples, the field RPD guideline is ± 30%. The data are not qualified on the basis of field duplicate results.

Full Validation Criteria for Sample SG02SG002 and SG25SG006

III. Compound Quantitation and Reported Detection Limits

A. Sample results were recalculated, with the proper dilution factors and volumes used to calculate the sample results. The samples were found to be correctly quantitated. The reported detection limits were consistent with TtEMI's required report limits and reflect any dilutions and volumes used.

IV. System Performance

A. The samples were evaluated for baseline shifts, extraneous peaks, loss of resolution, and peak tailing. No system degradation was noted.

OVERALL ASSESSMENT OF DATA

I. Method Compliance and Additional Comments

A. Some results reported on the laboratory hardcopy do not match the electronic data deliverable (EDD) due to rounding. The result reported in the EDD for NMOC for SG25SG005 has been corrected to reflect the result reported on the laboratory hardcopy. For sample SG25SG004, oxygen was qualified as "E" in the EDD; however, the hardcopy did not indicate calibration range exceedance for this compound, therefore oxygen has not been flagged (J8) for this sample.

B. Methane values analyzed by method EPA 25C exceeding the calibration range for samples SG02SG001, SG02SG002, SG25SG005, SG25SG006 and SG25SG007 were obtained from EPA Method 3C.

C. Field blanks were used as matrix spike/matrix spike duplicate samples.

II. Usability

A. Due to high surrogate recovery in the TO-15 analyses, detected results for four samples are qualified as estimated. Due to calibration range exceedance, detected hexane results for two samples are qualified as estimated. Due to common laboratory contamination, detected methylene chloride results for six samples and five dilutions; detected acetone results for three samples; and the detected 2-butanone result for one sample are qualified as nondetected. Due to method blank contamination, detected propylene results for three samples are qualified as nondetected. Due to field blank contamination, detected chloromethane results for two samples and four dilutions; detected dichlorodifluoromethane results for three samples; detected hexachlorobutadiene results for five dilutions; the detected hexane result for one sample; and detected toluene results for three samples and three dilutions are qualified as nondetected.

B. Due to calibration range exceedance in the EPA Method 3C analyses, methane results for four samples, carbon dioxide results for three samples, and the oxygen result for one sample are qualified as estimated. Due to field blank contamination, detected nitrogen and oxygen results for six samples are qualified as nondetected.

C. Due to calibration range exceedance in the EPA Method 25C, methane results for six samples are qualified as estimated.

D. Samples SG02SG001, SG02SG002, SG25SG005, SG25SG006 and SG25SG007 were diluted and reanalyzed for the TO-15 analysis due to matrix interference. The re-extracted samples exhibited similar surrogate recovery problems. The original analysis should be used as the final validated result due to better surrogate recovery.

E. The quality control criteria reviewed, other than those discussed above, were met and are considered acceptable. Sample results that were found to be rejected (R) are unusable for all purposes. Sample results that were found to be estimated (J) are usable for limited purposes only. Based upon the cursory and full data validation all other results are considered valid and usable for all purposes. The high number of qualifications made to the data indicate several analytical and/or matrix problems that limit the usability of the data.

DATA VALIDATION REPORT{PRIVATE }

Site: Hunters Point Shipyard, Parcel E
Nonstandard Data Gaps Investigation
Contract Task Order (CTO) No.: DO 003
Laboratory: Atmospheric Analysis & Consulting, Inc.
Data Reviewer: ETHIX
Review Date: 5/16/02

Sample Delivery Group (SDG) No.: HAN07

Sample Nos.:				
	SG01SG003	SG01SG006	SG02SG004	SG01SG006DL
	SG01SG004*	SG01SG007	SGFBSG007	SG01SG007DL
	SG01SG005	SG02SG003	SG01SG006DL	

All samples were received intact and properly labeled.

* Full Validation Sample

Matrix: Air

Collection Date: 4/2/02

The data were qualified according to the U.S. Environmental Protection Agency (EPA) documents "USEPA Contract Laboratory Program National Functional Guidelines for Organic Data Review" (October 1999) and "USEPA Contract Laboratory Program National Functional Guidelines For Inorganic Data Review" (February 1994). In addition, the Tetra Tech EM Inc. (TtEMI) documents "Data Validation Guidelines for CLP Organic Analyses," "Data Validation Guidelines for CLP Inorganic Analyses," "Data Validation Guidelines for Non-CLP Organic Analyses," "Data Validation Guidelines for Non-CLP Inorganic and Physical Analyses" (August 1, 2001), and the document entitled “TtEMI Comprehensive Long-term Environmental Action Navy II Analytical Services Statement of Work” (May 2000) were used along with other specified criteria in EPA methods. Data validation requirements are presented below.

I certify that all data validation criteria outlined in the above referenced documents were assessed, and any qualifications made to the data were in accordance with those documents.

Certified by

DATA VALIDATION REQUIREMENTS

Full validation includes all parameters listed below. Cursory validation parameters are indicated by an asterisk (*).

CLP Organic Parameters

* Holding times
GC/MS instrument performance check
* Initial and continuing calibrations
* Blanks
* Surrogate recovery
* Matrix spike/matrix spike duplicate
* Laboratory control sample or blank spike *
* Field duplicates
* Internal standard performance
Target compound identification
Tentatively identified compounds
Compound quantitation
Reported detection limits
System performance
* Overall assessment of data for the SDG

CLP Inorganic Parameters

* Holding times
* Initial and continuing calibrations
* Blanks
* Matrix spike
* Laboratory control sample or blank spike
Field duplicates
* Matrix duplicates
ICP interference check sample
GFAA quality control
* ICP serial dilution
Sample result verification
Analyte quantitation
Reported detection limits
* Overall assessment of data for the SDG

Non-CLP Organic and Inorganic Parameters

* Method compliance
* Holding times
* Initial and continuing calibrations
* Blanks
* Matrix spike/matrix spike duplicate
* Laboratory control sample or blank spike
* Field duplicates
* Matrix duplicates
* Surrogate recovery
Analyte quantitation
Reported detection limits
* Overall assessment of data for the SDG

DATA VALIDATION QUALIFIERS AND CODES

Data Validation Qualifiers and Codes

U1	Compound is nondetected due to laboratory blank contamination
U2	Compound is nondetected due to field blank contamination
U4	Compound is nondetected because of common laboratory contamination
J0	Compound is estimated due to internal standard exceedance
J1	Compound is estimated due to noncompliant instrument performance criteria
J2	Compound is estimated due to laboratory duplicate precision exceedance
J3	Compound is estimated due to surrogate/LCS/MS exceedance
J4	Compound is estimated due to serial dilution exceedance
J5	Compound is estimated due to holding time exceedance
J6	Compound is estimated due to field duplicate precision exceedance
J7	Compound is estimated due to calibration exceedance
J8	Compound is estimated due to calibration range exceedance
J9	Compound is estimated due to interference check exceedance (metals) or confirmation problems (dual column analyses)
UJ9	Compound is nondetected and estimated due to confirmation problems (dual column analyses)
R0	Compound is rejected due to internal standard exceedance
R1	Compound is rejected due to holding time exceedance
R2	Compound is rejected due to surrogate/LCS/MS exceedance
R3	Compound is rejected due to noncompliant instrument performance criteria
R7	Compound is rejected due to calibration exceedance

TABLE 1
CURSORY DATA VALIDATION SUMMARY

Analysis{PRIVATE}	Holding Times	Surrogates	MS/MSD	Matrix Duplicates	LCS	Blanks	Calibrations	Internal Standards	Field Duplicates	Other
TO-15	✓	Pg. 6	✓	N/A	✓	Pg. 7	✓	Pg. 8	Pg. 9	Pg. 9
EPA 3C	✓	N/A	✓	N/A	✓	Pg. 11	✓	N/A	Pg. 11	Pg. 11
EPA 25C	✓	N/A	✓	N/A	✓	✓	✓	N/A	Pg. 13	Pg. 13

Notes:
✓ indicates that all quality control criteria were met for the parameter as specified in the prescribed methods and data validation guidelines.
N/A indicates the parameter is not applicable to an analysis.
If criteria were not met and the data were qualified, a page number is indicated where the qualification is detailed.
The data were evaluated for all validation criteria and were found to be in control except where noted. Any outliers are described in the text.

TABLE 2
FULL DATA VALIDATION SUMMARY
Sample SG01SG004

Analysis{PRIVATE }	GC/MS Tuning	Target Compound List Identification	Compound or Analyte Quantification	Reported Detection Limits	Tentatively Identified Compounds	System Performance	Interference Check Sample	Graphite Furnace Quality Control
TO-15	✓	✓	✓	✓	N/A	✓	N/A	N/A
EPA 3C	N/A	N/A	✓	✓	N/A	✓	N/A	N/A
EPA 25C	N/A	N/A	✓	✓	N/A	✓	N/A	N/A

Notes:
✓ indicates that all quality control criteria were met for the parameter as specified in the prescribed methods and data validation guidelines.
N/A indicates the parameter is not applicable to an analysis.
If criteria were not met and the data were qualified, a page number is indicated where the qualification is detailed.
The data were evaluated for all validation criteria and were found to be in control except where noted. Any outliers found are described below.

DATA ASSESSMENT

TO-15 ANALYSIS

I. Surrogate Recovery

A. Due to surrogate recovery problems, the following detected results are qualified as estimated (J3).

- 1,2,4-trimethylbenzene, 1,2-dichloro-1,1,2,2-tetrafluoroethane, 1,3,5-trimethylbenzene,2-butanone, 4-ethyltoluene, acetone, benzene, carbon disulfide, chloroethane, chloromethane, cyclohexane, dichlorodifluoromethane, ethylbenzene, heptane, hexane, m,p-xylenes, o-xylene, propylene, toluene, trichloroethene and vinyl chloride in samples SG01SG003, SG01SG005, SG01SG006, SG01SG006DL and SG01SG006DL
- 1,1,2-trichloro-1,2,2-trifluoroethane, 1,2-dichloroethane and ethanol in samples SG01SG003, SG01SG006, SG01SG006DL and SG01SG006DL2
- 1,4-dichlorobenzene, styrene and tetrachloroethylene in samples SG01SG003, SG01SG005, SG01SG006DL and SG01SG006DL2
- 1,2-dichlorobenzene, cis-1,2-dichloroethene in samples SG01SG003, SG01SG005 and SG01SG006DL2
- bromomethane in samples SG01SG003, SG01SG006 and SG01SG006DL2
- methylene chloride in samples SG01SG005, SG01SG006DL and SG01SG006DL2
- 1,1-dichloroethane in samples SG01SG006 and SG01SG006DL2
- 1,1-dichloroethylene, 1,2-dibromomethane, 1,3-butadiene and t-1,3-dichloropropene in samples SG01SG006DL and SG01SG006DL2
- 1,3-dichlorobenzene in samples SG01SG003 and SG01SG005
- t-1,2-dichloroethylene and trichlorofluoromethane in samples SG01SG003 and SG01SG006DL
- tetrahydrofuran in samples SG01SG003 and SG01SG006DL2
- 1,1,1-trichloroethane and bromoform in sample SG01SG003
- MTBE in sample SG01SG006
- cis-1,3-dichloropropene in sample SG01SG006DL
- 1,2,4-trichlorobenzene, chloroform and hexachlorobutadiene in sample SG01SG006DL2
- carbon tetrachloride in sample SG01SG006DL

The surrogates outside of QC limits are listed below.

Sample ID	Surrogate	% R	QC Limits
SG01SG003	4-bromofluorobenzene	129	75-125
SG01SG005	4-bromofluorobenzene	134	75-125
SG01SG006	4-bromofluorobenzene	286	75-125
SG01SG006DL	4-bromofluorobenzene	383	75-125
SG01SG006DL2	4-bromofluorobenzene	190	75-125

High percent recoveries indicate that detected results may be biased high.

II. Blank Contamination

A. Due to common laboratory contamination, the following results are considered nondetected (U4).

- acetone in sample SG01SG007DL
- methylene chloride in samples SG01SG005, SG01SG006DL, SG01SG006DL2, SG01SG007, SG01SG007DL, SG02SG003 and SGFBSG007
- 2-butanone in samples SG01SG006DL2, SG01SG007DL, SG02SG003, SG02SG004 and SGFBSG007

Acetone, methylene chloride, and 2-butanone are considered common laboratory contaminants when found at levels less than 5x the CRQL in environmental samples and not found in the associated blanks.

B. Due to method blank contamination, the following results are considered nondetected (U1).

- propylene in sample SGFBSG007

The following compounds were detected in the associated method blanks at the concentrations noted below.

Compound	Blank ID	Concentration, ppbv
Propylene	MBA040702-1	0.86

Detected results less than 5x the blank contamination were qualified.

C. Due to field blank contamination, the following results are considered nondetected (U2).

- acetone in samples SG02SG004, SG01SG007 and SG02SG003
- benzene in samples SG01SG007DL, SG02SG003 and SG02SG004
- chloromethane in sample SG02SG003
- dichlorodifluoromethane in sample SG02SG003
- ethanol in samples SG01SG006, SG01SG006DL, SG01SG007, SG02SG003 and SG02SG004
- hexane in samples SG01SG007 and SG02SG003
- m,p-xylenes in samples SG02SG003 and SG02SG004
- MTBE in sample SG01SG006
- o-xylene in sample SG02SG003
- propylene in sample SG01SG007
- toluene in samples SG02SG003 and SG02SG004

The following analytes were detected in the associated field blank at the concentrations noted below.

Analyte	Blank ID	Concentration, ppbv
Acetone	SGFBSG007	7.7
Benzene	SGFBSG007	0.91
Chloromethane	SGFBSG007	0.9
Dichlorodifluoromethane	SGFBSG007	0.91
Ethanol	SGFBSG007	4.6
Hexane	SGFBSG007	0.71
m,p-xylenes	SGFBSG007	2.1

MTBE	SGFBSG007	0.8
o-xylene	SGFBSG007	0.9
propylene	SGFBSG007	2.3
toluene	SGFBSG007	2.1

Detected results less than 5x or 10x the maximum blank contamination were qualified.

III. Internal Standards

A. Due to internal standard problems, the following detected and nondetected results are qualified as estimated (J0/UJ0).

- All compounds quantitated using chlorobenzene-d5 in sample SG01SG006

The internal standard area counts in the samples listed above were less than one half of the reference standard and are listed below.

Sample	Internal Standard	Value	QC Limits
SG01SG006	chlorobenzene-d5	1101938	3190776 - 12763102

Internal standard area counts of less than 50% of the standard area count may indicate a loss of instrument sensitivity.

IV. Field Duplicates

A. The following RPDs were obtained for the field duplicate samples SG01SG004 / SG01SG005:

- 13% for propylene
- 76% for dichlorodifluoromethane
- 63% for chloromethane
- 77% for 1,2-dichloro-1,1,2,2-tetrafluoromethane
- 87% for vinyl chloride
- 87% for chloroethane
- NQ for trichlorofluoromethane
- 30% for acetone
- 182% for methylene chloride
- 54% for carbon disulfide
- 91% for 2-butanone
- 94% for cis-1,2-dichloroethene
- 7% for hexane
- NQ for 1,2-dichloroethane
- 81% for benzene
- NQ for carbon tetrachloride
- NQ for cyclohexane
- 45% for trichloroethene
- 62% for heptane
- 88% for toluene

- 48% for tetrachloroethylene
- 70% for ethylbenzene
- 78% for m,p-xylenes
- 91% for styrene
- 79% for o-xylene
- 63% for 4-ethyltoluene
- 65% for 1,3,5-trimethylbenzene
- 35% for 1,2,4-trimethylbenzene
- 61% for 1,3-dichlorobenzene
- 89% for 1,4-dichlorobenzene
- 73% for 1,2-dichlorobenzene

For air samples, the field RPD guideline is ± 30%. The data are not qualified on the basis of field duplicate results.

V. Other Qualifications

A. The following results are qualified as estimated (J).

- All TO-15 detected results reported below the CRQL

Detected results reported below the CRQL are considered to be qualitatively acceptable, but quantitatively unreliable due to the uncertainty in analytical precision near the limit of detection.

B. The following detected results are qualified as estimated (J8) due to calibration range exceedance.

- acetone and toluene in sample SG01SG006
- ethylbenzene, m,p-xylenes and o-xylene in samples SG01SG006, SG01SG006DL and SG01SG006DL2

Analytes detected at concentrations exceeding the calibration range are quantitatively unreliable. Samples SG01SG006 and SG01SG006DL were appropriately diluted and reanalyzed.

Full Validation Criteria for Sample SG01SG004

VI. GC/MS Tuning

A. The ion abundance criteria were met for the bromofluorobenzene (BFB) GC/MS performance check. The sample wass analyzed within 12 hours of the associated performance check.

VII. Target Compound List (TCL) Identification

A. The relative retention times, mass spectra, and peak identifications of the sample were evaluated. Target compound identification was considered to be correct.

VIII. Compound Quantitation and Reported Detection Limits

A. Sample results were recalculated with the proper dilution factors and volumes used to calculate the sample results. The sample was found to be correctly quantitated. The reported detection limits were consistent with TtEMI's required report limits and reflect any dilutions and volumes used.

IX. System Performance

A. The sample was evaluated for reconstructed ion chromatogram (RIC) baseline shifts, extraneous peaks, loss of resolution, and peak tailing. No system degradation was noted.

EPA METHOD 3C ANALYSIS

I. Blank Contamination

A. Due to field blank contamination, the following results are considered nondetected (U2).

- nitrogen in samples SG01SG003, SG01SG004, SG01SG005, SG01SG006, SG01SG007, SG02SG003 and SG02SG004
- oxygen in samples SG01SG003, SG01SG004, SG01SG005, SG01SG006, SG01SG007, SG02SG003 and SG02SG004

The following analytes were detected in the associated field blanks at the concentrations noted below.

Compound	Blank ID	Concentration, %
Nitrogen	SGFBSG007	81
Oxygen	SGFBSG007	19

Detected results less than 5x the maximum blank contamination were qualified.

II. Field Duplicates

A. The following RPDs were obtained for the field duplicate samples SG01SG004 / SG01SG005:

- 79% for oxygen
- 31% for nitrogen
- NQ for methane
- NQ for carbon dioxide

For air samples, the field RPD guideline is $\pm$ 30. The data are not qualified on the basis of field duplicate results.

III. Other Qualifications

A. The following detected results are qualified as estimated (J8) due to calibration range exceedance.

- carbon dioxide in sample SG01SG003
- oxygen in samples SG02SG003 and SGFBSG007

Analytes detected at concentrations exceeding the calibration range are quantitatively unreliable. The samples listed above were not appropriately diluted and reanalyzed.

Full Validation Criteria for Sample SG01SG004

IV. Compound Quantitation and Reported Detection Limits

A. Sample results were recalculated, with the proper dilution factors and volumes used to calculate the sample results. The sample was found to be correctly quantitated. The reported detection limits were consistent with TtEMI's required report limits and reflect any dilutions and volumes used.

V. System Performance

A. The sample was evaluated for baseline shifts, extraneous peaks, loss of resolution, and peak tailing. No system degradation was noted.

EPA METHOD 25C ANALYSIS

I. Field Duplicates

A. The following RPDs were obtained for the field duplicate samples SG01SG004 / SG01SG005:

- 53% for methane
- 39% for NMOC

For air samples, the field RPD guideline is ± 30%. The data are not qualified on the basis of field duplicate results.

II. Other Qualifications

A. The following detected results are qualified as estimated (J8) due to calibration range exceedance.

- methane in samples SG01SG003, SG01SG004, SG01SG005, SG01SG006 and SG01SG007

Analytes detected at concentrations exceeding the calibration range are quantitatively unreliable. The samples listed above were not appropriately diluted and reanalyzed.

Full Validation Criteria for Sample SG01SG004

III. Compound Quantitation and Reported Detection Limits

A. Sample results were recalculated, with the proper dilution factors and volumes used to calculate the sample results. The sample was found to be correctly quantitated. The reported detection limits were consistent with TtEMI's required report limits and reflect any dilutions and volumes used.

IV. System Performance

A. The sample was evaluated for baseline shifts, extraneous peaks, loss of resolution, and peak tailing. No system degradation was noted.

OVERALL ASSESSMENT OF DATA

I. Method Compliance and Additional Comments

A. Some results reported on the laboratory hardcopy do not match the electronic data deliverable (EDD) due to rounding. Results reported in the EDD for carbon dioxide, methane, nitrogen and oxygen for SG01SG004 have been hand-corrected to reflect results reported on the laboratory hardcopy. For sample SG01SG003, carbon dioxide was qualified as "E" in the EDD; however, calibration range exceedance for this compound was not indicated on the laboratory hardcopy.

B. Methane values analyzed by method EPA 25C exceeding the calibration range for samples SG01SG003, SG01SG004, SG01SG005, SG01SG006 and SG1SG007 were obtained from EPA Method 3C.

C. The field blanks for TO-15 and EPA 3C were used as matrix spike/matrix spike duplicate samples, which is a protocol violation.

II. Usability

A. Due to high surrogate recovery in the TO-15 analyses, detected results for the original analysis of three samples and two reanalyses of one sample were qualified as estimated. Due to calibration range exceedance, ethylbenzene, m,p-xylenes and o-xylene results for three samples and acetone and toluene results for one sample are qualified as estimated. Due to common laboratory contamination, detected methylene chloride results for four samples and three dilutions, detected 2-butanone results for two samples and two dilutions, and the detected acetone result for one diluted sample are qualified as nondetected. Due to method blank contamination, the detected propylene result for one sample is qualified as nondetected. Due to field blank contamination, detected ethanol results for four samples and one dilution; detected acetone results for three samples; detected benzene results for two samples and one dilution; detected hexane, m,p-xylenes and toluene results for two samples; detected chloromethane, dichlorodifluoromethane, MTBE and o-xylene results for one sample are qualified as nondetected.

B. Due to field blank contamination in the EPA Method 3C analyses, detected nitrogen and oxygen results for seven samples are qualified as nondetected.

C. Due to calibration range exceedance in the EPA Method 25C, methane results for five samples are qualified as estimated.

D. Sample SG01SG006 (diluted twice) and SG01SG007 were diluted and reanalyzed for the TO-15 analysis due to calibration range exceedance and/or matrix interference. The diluted sample SG01SG006 exhibited similar surrogate recovery problems. Sample SG01SG007 was reanalyzed at a dilution due to matrix interference. The diluted analysis of SG01SG007 should be used as the final validated result.

E. The quality control criteria reviewed, other than those discussed above, were met and are considered acceptable. Sample results that were found to be rejected (R) are unusable for all purposes. Sample results that were found to be estimated (J) are usable for limited purposes only. Based upon the cursory and full data validation all other results are considered valid and usable for all purposes. The

high number of qualifications made to the data indicate several analytical and/or matrix problems that limit the usability of the data.

DATA VALIDATION REPORT{PRIVATE }

Site: Hunters Point Shipyard, Parcel E
Nonstandard Data Gaps Investigation
Contract Task Order (CTO) No.: DO 003
Laboratory: Atmospheric Analysis & Consulting, Inc.
Data Reviewer: ETHIX
Review Date: 5/18/02

Sample Delivery Group (SDG) No.: HAN08

Sample Nos.				
	SG02SG005	SG02SG007DL	SG26SG001	SGFBSG008DL
	SG02SG006	SG03SG001*	SG26SG001DL	
	SG02SG006DL	SG03SG001DL	SG27SG001	
	SG02SG007	SG04SG003*	SGFBSG008	

All samples were received intact and properly labeled.

* Full Validation Sample

Matrix: Air

Collection Dates: 4/2/02 and 4/3/02

The data were qualified according to the U.S. Environmental Protection Agency (EPA) documents "USEPA Contract Laboratory Program National Functional Guidelines for Organic Data Review" (October 1999) and "USEPA Contract Laboratory Program National Functional Guidelines For Inorganic Data Review" (February 1994). In addition, the Tetra Tech EM Inc. (TtEMI) documents "Data Validation Guidelines for CLP Organic Analyses," "Data Validation Guidelines for CLP Inorganic Analyses," "Data Validation Guidelines for Non-CLP Organic Analyses," "Data Validation Guidelines for Non-CLP Inorganic and Physical Analyses" (August 1, 2001), and the document entitled “TtEMI Comprehensive Long-term Environmental Action Navy II Analytical Services Statement of Work” (May 2000) were used along with other specified criteria in EPA methods. Data validation requirements are presented below.

I certify that all data validation criteria outlined in the above referenced documents were assessed, and any qualifications made to the data were in accordance with those documents.

Certified by

DATA VALIDATION REQUIREMENTS

Full validation includes all parameters listed below. Cursory validation parameters are indicated by an asterisk (*).

CLP Organic Parameters

* Holding times
  GC/MS instrument performance check
* Initial and continuing calibrations
* Blanks
* Surrogate recovery
* Matrix spike/matrix spike duplicate
* Laboratory control sample or blank spike *
* Field duplicates
* Internal standard performance
  Target compound identification
  Tentatively identified compounds
  Compound quantitation
  Reported detection limits
  System performance
* Overall assessment of data for the SDG

CLP Inorganic Parameters

* Holding times
* Initial and continuing calibrations
* Blanks
* Matrix spike
* Laboratory control sample or blank spike
  Field duplicates
* Matrix duplicates
  ICP interference check sample
  GFAA quality control
* ICP serial dilution
  Sample result verification
  Analyte quantitation
  Reported detection limits
* Overall assessment of data for the SDG

Non-CLP Organic and Inorganic Parameters

* Method compliance
* Holding times
* Initial and continuing calibrations
* Blanks
* Matrix spike/matrix spike duplicate
* Laboratory control sample or blank spike
* Field duplicates
* Matrix duplicates
* Surrogate recovery
  Analyte quantitation
  Reported detection limits
* Overall assessment of data for the SDG

DATA VALIDATION QUALIFIERS AND CODES

Data Validation Qualifiers and Codes

U1	Compound is nondetected due to laboratory blank contamination
U2	Compound is nondetected due to field blank contamination
U4	Compound is nondetected because of common laboratory contamination
J0	Compound is estimated due to internal standard exceedance
J1	Compound is estimated due to noncompliant instrument performance criteria
J2	Compound is estimated due to laboratory duplicate precision exceedance
J3	Compound is estimated due to surrogate/LCS/MS exceedance
J4	Compound is estimated due to serial dilution exceedance
J5	Compound is estimated due to holding time exceedance
J6	Compound is estimated due to field duplicate precision exceedance
J7	Compound is estimated due to calibration exceedance
J8	Compound is estimated due to calibration range exceedance
J9	Compound is estimated due to interference check exceedance (metals) or confirmation problems (dual column analyses)
UJ9	Compound is nondetected and estimated due to confirmation problems (dual column analyses)
R0	Compound is rejected due to internal standard exceedance
R1	Compound is rejected due to holding time exceedance
R2	Compound is rejected due to surrogate/LCS/MS exceedance
R3	Compound is rejected due to noncompliant instrument performance criteria
R7	Compound is rejected due to calibration exceedance

TABLE 1
CURSORY DATA VALIDATION SUMMARY

Analysis{PRIVATE}	Holding Times	Surrogates	MS/MSD	Matrix Duplicates	LCS	Blanks	Calibrations	Internal Standards	Field Duplicates	Other
TO-15	✓	Pg. 6	✓	N/A	✓	Pg. 7	✓	✓	Pg. 8	Pg. 9
EPA 3C	✓	N/A	✓	N/A	✓	Pg. 10	✓	N/A	Pg. 10	Pg. 11
EPA 25C	✓	N/A	✓	N/A	✓	Pg. 12	✓	N/A	Pg. 12	Pg. 12

Notes:
✓ indicates that all quality control criteria were met for the parameter as specified in the prescribed methods and data validation guidelines.
N/A indicates the parameter is not applicable to an analysis.
If criteria were not met and the data were qualified, a page number is indicated where the qualification is detailed.
The data were evaluated for all validation criteria and were found to be in control except where noted. Any outliers are described in the text.

TABLE 2
FULL DATA VALIDATION SUMMARY
Samples SG03SG001 and SG04SG003

Analysis{PRIVATE }	GC/MS Tuning	Target Compound List Identification	Compound or Analyte Quantification	Reported Detection Limits	Tentatively Identified Compounds	System Performance	Interference Check Sample	Graphite Furnace Quality Control
TO-15	✓	✓	✓	✓	N/A	✓	N/A	N/A
EPA 3C	N/A	N/A	✓	✓	N/A	✓	N/A	N/A
EPA 25C	N/A	N/A	✓	✓	N/A	✓	N/A	N/A

Notes:
✓ indicates that all quality control criteria were met for the parameter as specified in the prescribed methods and data validation guidelines.
N/A indicates the parameter is not applicable to an analysis.
If criteria were not met and the data were qualified, a page number is indicated where the qualification is detailed.
The data were evaluated for all validation criteria and were found to be in control except where noted. Any outliers found are described below.

DATA ASSESSMENT

TO-15 ANALYSIS

I. Surrogate Recovery

A. Due to surrogate recovery problems, the following detected results are qualified as estimated (J3).

- 1,2,4-trimethylbenzene, 1,2-dichloro-1,1,2,2-tetrafluoroethane, 1,3,5-trimethylbenzene, 1,4-dichlorobenzene, 4-ethyltoluene, benzene, carbon disulfide, chloroethane, cis-1,2-dichloroethene, cyclohexane, dichlorodifluoromethane, ethylbenzene, heptane, hexane, m,p-xylenes, methylene chloride, o-xylene, propylene, toluene, trichloroethene and vinyl chloride in samples SG02SG006, SG02SG006DL, SG02SG007, SG02SG007DL, SG03SG001, SG03SG001DL and SG26SG001

- acetone in samples SG02SG006, SG02SG006DL, SG02SG007, SG02SG007DL, SG03SG001DL and SG26SG001

- styrene and tetrachloroethylene in samples SG02SG006, SG02SG006DL, SG02SG007, SG02SG007DL, SG03SG001 and SG26SG001

- 1,2-dichloroethane in samples SG02SG006, SG02SG006DL, SG02SG007, SG02SG007DL, SG03SG001 and SG26SG001

- 1,2-dichlorobenzene in samples SG02SG006, SG02SG006DL, SG03SG001, SG03SG001DL and SG26SG001

- ethanol in samples SG02SG006DL, SG02SG007, SG02SG007DL, SG03SG001 and SG26SG001

- 2-butanone in samples SG02SG006, SG02SG007, SG02SG007DL and SG26SG001

- 1,3-dichlorobenzene in samples SG02SG006, SG02SG006DL and SG03SG001

- 1,1-dichloroethane in samples SG02SG006DL, SG02SG007 and SG26SG001

- chloromethane in samples SG02SG006DL, SG02SG007DL and SG26SG001

- 1,1,2-trichloro-1,2,2-trifluoroethane in samples SG02SG007 and SG02SG007DL

- 1,1-dichloroethylene in samples SG02SG007 and SG03SG001

- 1,2,4-trichlorobenzene in samples SG02SG006 and SG26SG001

- 4-methyl-2-pentanone(MIBK) in samples SG02SG006DL and SG03SG001DL

- t-1,2-dichloroethylene in samples SG03SG001 and SG26SG001

- bromomethane in sample SG02SG006DL
- 1,3-butadiene in sample SG26SG001
- chloroform and isopropyl alcohol in sample SG02SG006
- tetrahydrofuran in sample SG26SG001

The surrogates outside of QC limits are listed below.

Sample ID	Surrogate	% R	QC Limits
SG02SG006	4-bromofluorobenzene	154	75-125
SG02SG006DL	4-bromofluorobenzene	129	75-125
SG02SG007	4-bromofluorobenzene	215	75-125
SG02SG007DL	4-bromofluorobenzene	139	75-125
SG03SG001	4-bromofluorobenzene	155	75-125
SG03SG001DL	4-bromofluorobenzene	133	75-125
SG26SG001	4-bromofluorobenzene	147	75-125

High percent recoveries indicate that detected results may be biased high.

II. Blank Contamination

A. Due to common laboratory contamination, the following results are considered nondetected (U4).

- acetone in samples SG27SG001 and SGFBSG008
- methylene chloride in samples SG02SG005, SG02SG006, SG02SG006DL, SG03SG001, SG04SG003, SG26SG001DL, SG27SG001 and SGFBSG008
- 2-butanone in samples SG02SG005, SG02SG007DL, SG04SG003 and SG26SG001DL

Acetone, methylene chloride and 2-butanone are considered common laboratory contaminants when found at levels less than 5x the CRQL in environmental samples and not found in the associated blanks.

B. Due to method blank contamination, the following results are considered nondetected (U1).

- propylene in samples SG27SG001 and SGFBSG008

The following compound was detected in the associated method blank at the concentrations noted below.

Compound	Blank ID	Concentration, ppbv
propylene	MBA040702-1	0.86

Detected results less than 5x the blank contamination were qualified.

C. Due to field blank contamination, the following results are considered nondetected (U2).

- 1,2,4-trimethylbenzene in samples SG04SG003 and SG27SG001
- m,p-xylenes in samples SG02SG005 and SG04SG003
- methylene chloride in sample SG26SG001

The following analytes were detected in the associated field blank at the concentrations noted below.

Analyte	Blank ID	Concentration, ppbv
1,2,4-trimethylbenzene	SGFBSG008	1.11
m,p-xylenes	SGFBSG008	2.16
methylene chloride	SGFBSG008	1.52

Detected results less than 5x the maximum blank contamination were qualified.

III. Field Duplicates

A. The following RPDs were obtained for the field duplicate samples SG04SG003 / SG04SG004:

- 157% for propylene
- 105% for dichlorodifluoromethane
- 150% for chloromethane
- 125% for 1,2-dichloro-1,1,2,2-tetrafluoromethane
- 130% for vinyl chloride
- 132% for chloroethane
- NQ for acetone
- 115% for methylene chloride
- NQ for carbon disulfide
- NQ for 1,1,2-trichloro-1,2,2-trifluoroethane
- NQ for t-1,2-dichloroethylene
- 140% for 1,1-dichloroethane
- 47% for 2-butanone
- 144% for cis-1,2-dichloroethene
- 120% for hexane
- NQ for 1,2-dichloroethane
- 126% for benzene
- 129% for cyclohexane
- 64% for trichloroethene
- 56% for heptane
- 153% for toluene
- 15% for tetrachloroethylene
- 47% for ethylbenzene
- 51% for m,p-xylenes
- NQ for styrene
- 91% for o-xylene
- 28% for 1,2,4-trimethylbenzene
- NQ for 1,2,4-trichlorobenzene

For air samples, the field RPD guideline is $\pm$ 30%. The data are not qualified on the basis of field duplicate results.

IV. Other Qualifications

A. The following results are qualified as estimated (J).

- All TO-15 detected results reported below the CRQL

Detected results reported below the CRQL are considered to be qualitatively acceptable, but quantitatively unreliable due to the uncertainty in analytical precision near the limit of detection.

Full Validation Criteria for Samples SG03SG001 and SG04SG003

V. GC/MS Tuning

A. The ion abundance criteria were met for the bromofluorobenzene (BFB) GC/MS performance check. The samples were analyzed within 12 hours of the associated performance check.

VI. Target Compound List (TCL) Identification

A. The relative retention times, mass spectra, and peak identifications of the samples were evaluated. Target compound identification was considered to be correct.

VII. Compound Quantitation and Reported Detection Limits

A. Sample results were recalculated with the proper dilution factors and volumes used to calculate the sample results. The samples were found to be correctly quantitated. The reported detection limits were consistent with TtEMI's required report limits and reflect any dilutions and volumes.

VIII. System Performance

A. The samples were evaluated for reconstructed ion chromatogram (RIC) baseline shifts, extraneous peaks, loss of resolution, and peak tailing. No system degradation was noted.

EPA METHOD 3C ANALYSIS

I. Blank Contamination

A. Due to field blank contamination, the following results are considered nondetected (U2).

- nitrogen and oxygen in samples SG02SG005, SG02SG006, SG02SG007, SG03SG001, SG04SG003 and SG26SG001
- nitrogen in SG27SG001

The following analytes were detected in the associated field blanks at the concentrations noted below.

Compound	Blank ID	Concentration, %
nitrogen	SGFBSG008	80.44
oxygen	SGFBSG008	19.07

Detected results less than 5x the maximum blank contamination were qualified.

II. Calibrations

A. Due to a continuing calibration problem, the following detected results are qualified as estimated (J7).

- nitrogen in samples SGFBSG008, SG27SG001 and SG04SG003

The following continuing calibration had a percent differences (%D) of >20%.

Calibration Date	Compound	%D
4/11/02 8:05	nitrogen	23.3

III. Field Duplicates

A. The following RPDs were obtained for the field duplicate samples SG04SG003 / SG04SG004:

- 83% for oxygen
- 89% for nitrogen
- 123% for methane
- 123% for carbon dioxide

For air samples, the field RPD guideline is ± 30. The data are not qualified on the basis of field duplicate results.

IV. Other Qualifications

A. The following results are qualified as estimated (J).

- All detected carbon dioxide and methane results reported below the CRQL

Detected results reported below the CRQL are considered to be qualitatively acceptable, but quantitatively unreliable due to the uncertainty in analytical precision near the limit of detection.

B. The following detected results are qualified as estimated (J8) due to calibration range exceedance.

- carbon dioxide in sample SG03SG001
- methane in samples SG02SG006, SG03SG001 and SG04SG003
- oxygen in sample SGFBSG008

Analytes detected at concentrations exceeding the calibration range are quantitatively unreliable. Sample SGFBSG001 was appropriately diluted and reanalyzed.

Full Validation Criteria for Samples SG03SG001 and SG04SG003

V. Compound Quantitation and Reported Detection Limits

A. Sample results were recalculated, with the proper dilution factors and volumes used to calculate the sample results. The samples were found to be correctly quantitated. The reported detection limits were consistent with TtEMI's required report limits and reflect any dilutions and volumes.

VI. System Performance

A. The samples were evaluated for baseline shifts, extraneous peaks, loss of resolution, and peak tailing. No system degradation was noted.

EPA METHOD 25C ANALYSIS

I. Blank Contamination

A. Due to field blank contamination, the following results are considered nondetected (U2).

- methane in sample SG27SG001

The following analyte was detected in the associated field blanks at the concentrations noted below.

Compound	Blank ID	Concentration, ppmv
methane	SGFBSG008	254

Detected results less than 5x the maximum blank contamination were qualified.

II. Field Duplicates

A. The following RPDs were obtained for the field duplicate samples SG04SG003 / SG04SG004:

- 120% for methane
- 119% for NMOC

For air samples, the field RPD guideline is ± 30%. The data are not qualified on the basis of field duplicate results.

III. Other Qualifications

A. The following detected results are qualified as estimated (J8) due to calibration range exceedance.

- methane in samples SG02SG005, SG02SG006, SG02SG007, SG03SG001, SG04SG003 and SG26SG001

Analytes detected at concentrations exceeding the calibration range are quantitatively unreliable. The samples listed above were not appropriately diluted and reanalyzed.

Full Validation Criteria for Samples SG03SG001 and SG04SG003

IV. Compound Quantitation and Reported Detection Limits

A. Sample results were recalculated, with the proper dilution factors and volumes used to calculate the sample results. The samples were found to be correctly quantitated. The reported detection limits were consistent with TtEMI's required report limits and reflect any dilutions and volumes.

V. System Performance

A. The samples were evaluated for baseline shifts, extraneous peaks, loss of resolution, and peak tailing. No system degradation was noted.

OVERALL ASSESSMENT OF DATA

I. Method Compliance and Additional Comments

A. Some results reported on the laboratory hardcopy do not match the electronic data deliverable (EDD) due to rounding. In addition, all nondetected results for TO-15 analyses reporting limits in the EDD do not match the laboratory hardcopy. The reporting limits in the EDD for sample SGFBSG008DL for EPA 3C analysis, and bromoform and styrene reporting limits in sample SGFBSG008 for TO-15 analysis do not match the laboratory hardcopy. The surrogate recovery reported in the EDD for samples SG03SG005 and SG03SG005DL for TO-15 analysis does not match the laboratory hardcopy.

B. Methane values exceeding the calibration range for samples SG02SG005, SG02SG006, SG02SG007, SG03SG001, SG04SG003 and SG26SG001 were obtained from EPA Method 3C.

C. The field blank was used as a matrix spike/matrix spike duplicate sample.

II. Usability

A. Due to high surrogate recovery in the TO-15 analyses, detected results in four samples and three dilutions are qualified as estimated. Due to common laboratory contamination, detected methylene chloride results for five samples and three dilutions; detected 2-butanone results for two samples and two dilutions; and detected acetone results for two samples are qualified as nondetected. Due to laboratory blank contamination, detected propylene results for two samples are qualified as nondetected. Due to field blank contamination, detected 1,2,4-trimethylbenzene results for two samples; detected m,p-xylenes results for two samples; and the detected methylene chloride result for one sample are qualified as nondetected.

B. Due to calibration problems in the EPA Method 3C analyses, detected nitrogen results for three samples are qualified as estimated. Due to calibration range exceedance, detected methane results for three samples, and carbon dioxide and oxygen results for one sample are qualified as estimated. Due to field blank contamination detected nitrogen results for seven samples and oxygen results for six samples are qualified as nondetected.

D. Due to calibration range exceedance in the EPA Method 25C, methane results for six samples are qualified as estimated. Due to field blank contamination, the detected methane result for one sample is qualified as nondetected.

E. Samples SG02SG006, SG02SG007, SG003SG001 and SG26SG001 were diluted and reanalyzed for the TO-15 analysis due to matrix interference. The diluted analyses should be used as the final validated results.

F. Sample SGFBSG008 was diluted and reanalyzed for the EPA 3C analysis. Oxygen should be used from the diluted analysis, and all remaining compounds should be used from the original analysis.

G. The quality control criteria reviewed, other than those discussed above, were met and are considered acceptable. Sample results that were found to be rejected (R) are unusable for all purposes. Sample results that were found to be estimated (J) are usable for limited purposes only. Based upon the cursory and full data validation all other results are considered valid and usable for all purposes. The

high number of qualifications made to the data indicate several analytical and/or matrix problems that limit the usability of the data.

DATA VALIDATION REPORT{PRIVATE }

Site:	Hunters Point Shipyard, Parcel E Nonstandard Data Gaps Investigation
Contract Task Order (CTO) No.: DO 003	
Laboratory:	Atmospheric Analysis & Consulting, Inc.
Data Reviewer:	ETHIX
Review Date:	5/18/02

Sample Delivery Group (SDG) No.: HAN09

Sample Nos.	SG02SG008*	SG03SG002	SG03SG006	SG21SG002
	SG02SG008DL	SG03SG002DL	SG03SG006DL	SGFBSG009
	SG02SG009	SG03SG005	SG21SG001	SGFBSG009DL
	SG02SG009DL	SG03SG005DL	SG21SG001DL	

All samples were received intact and properly labeled.

* Full Validation Sample

Matrix: Air

Collection Dates: 4/2/02 and 4/4/02

The data were qualified according to the U.S. Environmental Protection Agency (EPA) documents "USEPA Contract Laboratory Program National Functional Guidelines for Organic Data Review" (October 1999) and "USEPA Contract Laboratory Program National Functional Guidelines For Inorganic Data Review" (February 1994). In addition, the Tetra Tech EM Inc. (TtEMI) documents "Data Validation Guidelines for CLP Organic Analyses," "Data Validation Guidelines for CLP Inorganic Analyses," "Data Validation Guidelines for Non-CLP Organic Analyses," "Data Validation Guidelines for Non-CLP Inorganic and Physical Analyses" (August 1, 2001), and the document entitled “TtEMI Comprehensive Long-term Environmental Action Navy II Analytical Services Statement of Work” (May 2000) were used along with other specified criteria in EPA methods. Data validation requirements are presented below.

I certify that all data validation criteria outlined in the above referenced documents were assessed, and any qualifications made to the data were in accordance with those documents.

Certified by

DATA VALIDATION REQUIREMENTS

Full validation includes all parameters listed below. Cursory validation parameters are indicated by an asterisk (*).

CLP Organic Parameters

* Holding times
  GC/MS instrument performance check
* Initial and continuing calibrations
* Blanks
* Surrogate recovery
* Matrix spike/matrix spike duplicate
* Laboratory control sample or blank spike *
* Field duplicates
* Internal standard performance
  Target compound identification
  Tentatively identified compounds
  Compound quantitation
  Reported detection limits
  System performance
* Overall assessment of data for the SDG

CLP Inorganic Parameters

* Holding times
* Initial and continuing calibrations
* Blanks
* Matrix spike
* Laboratory control sample or blank spike
Field duplicates
* Matrix duplicates
  ICP interference check sample
  GFAA quality control
* ICP serial dilution
  Sample result verification
  Analyte quantitation
  Reported detection limits
* Overall assessment of data for the SDG

Non-CLP Organic and Inorganic Parameters

* Method compliance
* Holding times
* Initial and continuing calibrations
* Blanks
* Matrix spike/matrix spike duplicate
* Laboratory control sample or blank spike
* Field duplicates
* Matrix duplicates
* Surrogate recovery
  Analyte quantitation
  Reported detection limits
* Overall assessment of data for the SDG

DATA VALIDATION QUALIFIERS AND CODES

Data Validation Qualifiers and Codes

U1	Compound is nondetected due to laboratory blank contamination
U2	Compound is nondetected due to field blank contamination
U4	Compound is nondetected because of common laboratory contamination
J0	Compound is estimated due to internal standard exceedance
J1	Compound is estimated due to noncompliant instrument performance criteria
J2	Compound is estimated due to laboratory duplicate precision exceedance
J3	Compound is estimated due to surrogate/LCS/MS exceedance
J4	Compound is estimated due to serial dilution exceedance
J5	Compound is estimated due to holding time exceedance
J6	Compound is estimated due to field duplicate precision exceedance
J7	Compound is estimated due to calibration exceedance
J8	Compound is estimated due to calibration range exceedance
J9	Compound is estimated due to interference check exceedance (metals) or confirmation problems (dual column analyses)
UJ9	Compound is nondetected and estimated due to confirmation problems (dual column analyses)
R0	Compound is rejected due to internal standard exceedance
R1	Compound is rejected due to holding time exceedance
R2	Compound is rejected due to surrogate/LCS/MS exceedance
R3	Compound is rejected due to noncompliant instrument performance criteria
R7	Compound is rejected due to calibration exceedance

TABLE 1
CURSORY DATA VALIDATION SUMMARY

Analysis{PRIVATE}	Holding Times	Surrogates	MS/MSD	Matrix Duplicates	LCS	Blanks	Calibrations	Internal Standards	Field Duplicates	Other
TO-15	✓	Pg. 6	✓	N/A	✓	Pg. 7	✓	Pg. 8	Pg. 8	Pg. 8
EPA 3C	✓	N/A	✓	N/A	✓	Pg. 11	Pg. 11	N/A	Pg. 11	Pg. 12
EPA 25C	✓	N/A	✓	N/A	✓	✓	✓	N/A	Pg. 13	Pg. 13

Notes:
✓ indicates that all quality control criteria were met for the parameter as specified in the prescribed methods and data validation guidelines.
N/A indicates the parameter is not applicable to an analysis.
If criteria were not met and the data were qualified, a page number is indicated where the qualification is detailed.
The data were evaluated for all validation criteria and were found to be in control except where noted. Any outliers are described in the text.

TABLE 2
FULL DATA VALIDATION SUMMARY
Sample SG02SG008

Analysis{PRIVATE }	GC/MS Tuning	Target Compound List Identification	Compound or Analyte Quantification	Reported Detection Limits	Tentatively Identified Compounds	System Performance	Interference Check Sample	Graphite Furnace Quality Control
TO-15	✓	✓	✓	✓	✓	✓	N/A	N/A
EPA 3C	N/A	N/A	✓	✓	N/A	✓	N/A	N/A
EPA 25C	N/A	N/A	✓	✓	N/A	✓	N/A	N/A

Notes:
✓ indicates that all quality control criteria were met for the parameter as specified in the prescribed methods and data validation guidelines.
N/A indicates the parameter is not applicable to an analysis.
If criteria were not met and the data were qualified, a page number is indicated where the qualification is detailed.
The data were evaluated for all validation criteria and were found to be in control except where noted. Any outliers found are described below.

DATA ASSESSMENT

TO-15 ANALYSIS

I. Surrogate Recovery

A. Due to surrogate recovery problems, the following detected results are qualified as estimated (J3).

- 1,2-dichloro-1,1,2,2-tetrafluoroethane, 1,3,5-trimethylbenzene, 1,4-dichlorobenzene, benzene, chloroethane, cis-1,2-dichloroethene, cyclohexane, dichlorodifluoromethane, heptane, hexane, m,p-xylenes, methylene chloride, propylene, t-1,2-dichloroethylene, toluene, trichloroethene and vinyl chloride in samples SG02SG008, SG02SG008DL, SG02SG009, SG02SG009DL, SG03SG002, SG03SG002DL, SG03SG005, SG03SG005DL, SG03SG006, SG03SG006DL

- 1,1-dichloroethane and chlorobenzene in samples SG02SG008, SG02SG009, SG02SG009DL, SG03SG005, SG03SG005DL, SG03SG006, SG03SG006DL

- 1,1-dichloroethylene, 1,2-dibromomethane, 4-ethyltoluene, bromoform, styrene and t-1,3-dichloropropene in samples SG03SG002 and SG03SG002DL

- 1,2,4-trimethylbenzene in samples SG02SG008, SG02SG008DL, SG02SG009, SG02SG009DL, SG03SG002, SG03SG002DL, SG03SG006 and SG03SG006DL

- 1,2-dichlorobenzene in samples SG02SG008, SG02SG009, SG03SG002, SG03SG002DL, SG03SG005, SG03SG005DL, SG03SG006 and SG03SG006DL

- ethylbenzene in samples SG02SG008, SG02SG008DL, SG02SG009, SG02SG009DL, SG03SG002, SG03SG002DL, SG03SG005DL, SG03SG006 and SG03SG006DL

- 1,3-dichlorobenzene in samples SG02SG008, SG03SG002, SG03SG002DL, SG03SG005, SG03SG005DL, SG03SG006 and SG03SG006DL

- hexachlorobutadiene in samples SG02SG008, SG02SG008DL, SG03SG002, SG03SG002DL, SG03SG006 and SG03SG006DL

- o-xylene and tetrachloroethylene in samples SG02SG008, SG02SG008DL, SG02SG009, SG02SG009DL, SG03SG002 and SG03SG002DL

- carbon disulfide in samples SG02SG008, SG03SG002, SG03SG002DL, SG03SG006, SG03SG006DL

- 1,2-dichloroethane in samples SG02SG009, SG02SG009DL, SG03SG005 and SG03SG005DL

- 1,2,4-trichlorobenzene in samples SG03SG002, SG03SG002DL, SG03SG006 and SG03SG006DL

- 2-butanone (mek) in sample SG03SG006DL
- bromomethane in sample SG03SG005

The surrogates outside of QC limits are listed below.

Sample ID	Surrogate	% R	QC Limits
SG02SG008	4-bromofluorobenzene	408	75-125
SG02SG008DL	4-bromofluorobenzene	152	75-125
SG02SG009	4-bromofluorobenzene	367	75-125
SG02SG009DL	4-bromofluorobenzene	174	75-125
SG03SG002	4-bromofluorobenzene	153	75-125
SG03SG002DL	4-bromofluorobenzene	128	75-125
SG03SG005	4-bromofluorobenzene	198	75-125
SG03SG005DL	4-bromofluorobenzene	132	75-125
SG03SG006	4-bromofluorobenzene	284	75-125
SG03SG006DL	4-bromofluorobenzene	137	75-125

High percent recoveries indicate that detected results may be biased high.

II. Blank Contamination

A. Due to common laboratory contamination, the following results are considered nondetected (U4).

- methylene chloride in samples SG02SG008, SG02SG008DL, SG02SG009, SG02SG009DL, SG03SG002, SG03SG002DL, SG03SG005, SG03SG005DL, SG03SG006, SG03SG006DL, SG21SG001, SG21SG002 and SGFBSG009
- 2-butanone in samples SG03SG006DL and SG21SG001

Methylene chloride and 2-butanone are considered common laboratory contaminants when found at levels less than 5x the CRQL in environmental samples and not found in the associated blanks.

B. Due to field blank contamination, the following results are considered nondetected (U2).

- chloromethane and dichlorodifluoromethane in sample SG21SG001
- hexachlorobutadiene in samples SG02SG008, SG02SG008DL, SG03SG002, SG03SG006, SG03SG006DL, SG21SG001 and SG21SG002
- toluene in samples SG02SG008, SG02SG008DL, SG02SG009, SG02SG009DL, SG03SG005, SG03SG005DL, SG03SG006 and SG03SG006DL

The following analytes were detected in the associated field blank at the concentrations noted below.

Analyte	Blank ID	Concentration, ppbv
chloromethane	SGFBSG009	0.8
dichlorodifluoromethane	SGFBSG009	0.9
hexachlorobutadiene	SGFBSG009	3.4
toluene	SGFBSG009	0.9

Detected results less than 5x the maximum blank contamination were qualified.

III. Internal Standards

A. Due to internal standard problems, the following detected and nondetected results are qualified as estimated (J0/UJ0).

- All compounds quantitated using chlorobenzene-d5 in samples SG02SG008, SG02SG009 and SG03SG006

The internal standard area counts in the samples listed above were less than one half of the reference standard and are listed below.

Sample	Internal Standard	Value	QC Limits
SG02SG008	chlorobenzene-d5	740887	1091279 – 4365116
SG02SG009	chlorobenzene-d5	726796	1091279 – 4365116
SG03SG006	chlorobenzene-d5	953738	1091279 – 4365116

Internal standard area counts of less than 50% of the standard area count may indicate a loss of instrument sensitivity.

IV. Field Duplicates

A. The following RPDs were obtained for the field duplicate samples SG02SG009 / SG02SG008:

- 89% for propylene
- 35% for dichlorodifluoromethane
- 32% for 1,2-dichloro-1,1,2,2-tetrafluoromethane
- 34% for vinyl chloride
- 39% for chloroethane
- 42% for methylene chloride
- NQ for carbon disulfide
- 36% for t-1,2-dichloroethylene
- 33% for 1,1-dichloroethane
- 13% for cis-1,2-dichloroethene
- 9% for hexane
- NQ for 1,2-dichloroethane
- 2% for benzene
- 3% for cyclohexane
- 0% for trichloroethene
- 0% for heptane
- 6% for toluene
- 0% for tetrachloroethylene
- 2% for chlorobenzene
- 17% for ethylbenzene
- 2% for m,p-xylenes

- 2% for o-xylene
- 10% for 1,3,5-trimethylbenzene
- 4% for 1,2,4-trimethylbenzene
- NQ for 1,3-dichlorobenzene
- 5% for 1,4-dichlorobenzene
- 9% for 1,2-dichlorobenzene
- NQ for hexachlorobutadiene

For air samples, the field RPD guideline is ± 30%. The data are not qualified on the basis of field duplicate results.

V. Other Qualifications

A. The following results are qualified as estimated (J).

- All TO-15 detected results reported below the CRQL

Detected results reported below the CRQL are considered to be qualitatively acceptable, but quantitatively unreliable due to the uncertainty in analytical precision near the limit of detection.

B. The following detected results are qualified as estimated (J8) due to calibration range exceedance.

- propylene in samples SG02SG008, SG03SG002, SG03SG005 and SG03SG006

Analytes detected at concentrations exceeding the calibration range are quantitatively unreliable. The samples listed above were appropriately diluted and reanalyzed.

Full Validation Criteria for Sample SG02SG008

VI. GC/MS Tuning

A. The ion abundance criteria were met for the bromofluorobenzene (BFB) GC/MS performance check. The sample was analyzed within 12 hours of the associated performance check.

VII. Target Compound List (TCL) Identification

A. The relative retention times, mass spectra, and peak identifications of the sample were evaluated. Target compound identification was considered to be correct.

VIII. Compound Quantitation and Reported Detection Limits

A. Sample results were recalculated with the proper dilution factors and volumes used to calculate the sample results. The sample was found to be correctly quantitated. The reported detection limits were consistent with TtEMI's required report limits and reflect any dilutions and volumes.

IX. System Performance

A. The sample was evaluated for reconstructed ion chromatogram (RIC) baseline shifts, extraneous peaks, loss of resolution, and peak tailing. No system degradation was noted.

EPA METHOD 3C ANALYSIS

I. Blank Contamination

A. Due to field blank contamination, the following results are considered nondetected (U2).

- carbon dioxide in samples SG21SG001, SG21SG001DL and SG21SG002
- nitrogen in samples SG02SG008, SG02SG009, SG03SG002, SG03SG005, SG03SG006, SG21SG001, SG21SG001DL and SG21SG002
- oxygen in samples SG02SG008, SG02SG009, SG03SG002, SG03SG005, SG03SG006, SG21SG001, SG21SG001DL and SG21SG002

The following analytes were detected in the associated field blanks at the concentrations noted below.

Compound	Blank ID	Concentration, %
Carbon dioxide	SGFBSG009	0.05
Nitrogen	SGFBSG009	81
Oxygen	SGFBSG009	19.2

Detected results less than 5x the maximum blank contamination were qualified.

II. Calibrations

A. Due to continuing calibration problems, the following detected results are qualified as estimated (J7).

- nitrogen in samples SG03SG006, SG03SG002, SG03SG005, SG02SG008, SG02SG009, SG21SG001, SG21SG002 and SGFBSG009

The following continuing calibrations had percent differences (%D) of >20%.

Calibration Date	Compound	%D
4/11/02 8:05	nitrogen	23.3

III. Field Duplicates

A. The following RPDs were obtained for the field duplicate samples SG02SG009 / SG02SG008:

- 118% for oxygen
- 45% for nitrogen
- 13% for methane
- 4% for carbon dioxide

For air samples, the field RPD guideline is $\pm$ 30. The data are not qualified on the basis of field duplicate results.

IV. Other Qualifications

A. The following result is qualified as estimated (J).

- The methane detected result for SG21SG001DL is reported below the CRQL

Detected results reported below the CRQL are considered to be qualitatively acceptable, but quantitatively unreliable due to the uncertainty in analytical precision near the limit of detection.

B. The following detected results are qualified as estimated (J8) due to calibration range exceedance.

- carbon dioxide in samples SG02SG009 and SG03SG002
- methane in samples SG02SG008, SG02SG009 and SG03SG002
- oxygen in samples SG02SG009, SG21SG001 and SGFBSG009

Analytes detected at concentrations exceeding the calibration range are quantitatively unreliable. Samples SG21SG001 and SGFBSG009 were appropriately diluted and reanalyzed.

Full Validation Criteria for Sample SG02SG008

V. Compound Quantitation and Reported Detection Limits

A. Sample results were recalculated, with the proper dilution factors and volumes used to calculate the sample results. The sample was found to be correctly quantitated. The reported detection limits were consistent with TtEMI's required report limits and reflect any dilutions and volumes.

VI. System Performance

A. The sample was evaluated for baseline shifts, extraneous peaks, loss of resolution, and peak tailing. No system degradation was noted.

EPA METHOD 25C ANALYSIS

I. Field Duplicates

A. The following RPDs were obtained for the field duplicate samples SG02SG009 / SG02SG008:

- 13% for methane
- 4% for NMOC

For air samples, the field RPD guideline is ± 30%. The data are not qualified on the basis of field duplicate results.

II. Other Qualifications

A. The following detected results are qualified as estimated (J8) due to calibration range exceedance.

- methane in samples SG02SG008, SG02SG009, SG03SG002, SG03SG005, SG03SG006, SG21SG001 and SG21SG002

Analytes detected at concentrations exceeding the calibration range are quantitatively unreliable. Sample SG21SG001 was appropriately diluted and reanalyzed.

Full Validation Criteria for Sample SG02SG008

III. Compound Quantitation and Reported Detection Limits

A. Sample results were recalculated, with the proper dilution factors and volumes used to calculate the sample results. The sample was found to be correctly quantitated. The reported detection limits were consistent with TtEMI's required report limits and reflect any dilutions and volumes.

IV. System Performance

A. The sample was evaluated for baseline shifts, extraneous peaks, loss of resolution, and peak tailing. No system degradation was noted.

OVERALL ASSESSMENT OF DATA

I. Method Compliance and Additional Comments

A. Some results reported on the laboratory hardcopy do not match the electronic data deliverable (EDD) due to rounding. The dilution factor reported on the laboratory hardcopy for samples SG21SG001DL and SGFBSG009DL for EPA 3C analysis and sample SG03SG002 for TO-15 analysis does not match the EDD. The reporting limits in the EDD for sample SG21SG001DL for EPA 25C analysis do not match the laboratory hardcopy; the hardcopy is incorrect.

B. Methane values analyzed by method EPA 25C exceeding the calibration range for samples SG02SG008, SG02SG009, SG03SG002, SG03SG005, SG03SG006, SG21SG001 and SG21SG007 were obtained from EPA Method 3C.

C. The field blank for TO-15 was used as a matrix spike/matrix spike duplicate sample.

II. Usability

A. Due to high surrogate recovery in the TO-15 analyses, detected results for five samples and five dilutions were qualified as estimated. Due to calibration range exceedance, detected propylene results for four samples are qualified as estimated. Due to common laboratory contamination, detected methylene chloride results for eight samples and five dilutions and detected 2-butanone results for one sample and one dilution are qualified as nondetected. Due to field blank contamination, detected toluene results for four samples and four dilutions; detected hexachlorobutadiene results for five samples and two dilutions; and detected chloromethane and dichlorodifluoromethane results for one sample are qualified as nondetected.

B. Due to calibration problems in the EPA Method 3C analyses, detected nitrogen results for eight samples are qualified as estimated. Due to calibration range exceedance detected methane and oxygen results for three samples and detected carbon dioxide results for two samples are qualified as estimated. Due to field blank contamination detected carbon dioxide results for two samples and one dilution; detected nitrogen results for seven samples and one dilution; and oxygen results for seven samples and one dilution are qualified as nondetected.

C. Due to calibration range exceedance in the EPA Method 25C, methane results for seven samples are qualified as estimated.

D. Samples SG02SG008, SG02SG009, SG03SG002, SG03SG005 and SG03SG006 were diluted and reanalyzed for the TO-15 analysis due to matrix interference or internal standard exceedance. Compounds qualified as estimated in the original analysis of SG02SG008, SG02SG009 and SG03SG006 due to internal standard exceedance should be used from the dilution; all remaining compounds should be used from the original analysis. For samples SG03SG002 and SG03SG005, all results should be used from the original analysis.

E. Samples SG21SG001 and SGFBSG009 were diluted and reanalyzed for the EPA 3C analysis. Oxygen results should be used from the dilution and all remaining compounds should be used from the original analysis.

F. Sample SG21SG001 was diluted and reanalyzed for the EPA 25C analysis. Methane results should be used from the dilution, and NMOC should be used from the original analysis.

G. The quality control criteria reviewed, other than those discussed above, were met and are considered acceptable. Sample results that were found to be rejected (R) are unusable for all purposes. Sample results that were found to be estimated (J) are usable for limited purposes only. Based upon the cursory and full data validation all other results are considered valid and usable for all purposes. The high number of qualifications made to the data indicate several analytical and/or matrix problems that limit the usability of the data.

DATA VALIDATION REPORT{PRIVATE }

Site:	Hunters Point Shipyard, Parcel E Nonstandard Data Gaps Investigation
Contract Task Order (CTO) No.: DO 003	
Laboratory:	Atmospheric Analysis & Consulting, Inc.
Data Reviewer:	ETHIX
Review Date:	5/18/02

Sample Delivery Group (SDG) No.: HAN10

Sample Nos.:	SG01SG008	SG04SG004DL	SG25SG008	SGCSSG001DL
	SG03SG004	SG04SG005	SG27SG002	
	SG04SG004 *	SG04SG005DL	SGCSSG001 *	

Sample SG02SG010 was received with a broken neck upon arrival at the laboratory. The sample was canceled as instructed by TtEMI.

* Full Validation Sample

Matrix: Air

Collection Dates: 4/3/02 and 4/4/02

The data were qualified according to the U.S. Environmental Protection Agency (EPA) documents "USEPA Contract Laboratory Program National Functional Guidelines for Organic Data Review" (October 1999) and "USEPA Contract Laboratory Program National Functional Guidelines For Inorganic Data Review" (February 1994). In addition, the Tetra Tech EM Inc. (TtEMI) documents "Data Validation Guidelines for CLP Organic Analyses," "Data Validation Guidelines for CLP Inorganic Analyses," "Data Validation Guidelines for Non-CLP Organic Analyses," "Data Validation Guidelines for Non-CLP Inorganic and Physical Analyses" (August 1, 2001), and the document entitled “TtEMI Comprehensive Long-term Environmental Action Navy II Analytical Services Statement of Work” (May 2000) were used along with other specified criteria in EPA methods. Data validation requirements are presented below.

I certify that all data validation criteria outlined in the above referenced documents were assessed, and any qualifications made to the data were in accordance with those documents.

Certified by

DATA VALIDATION REQUIREMENTS

Full validation includes all parameters listed below. Cursory validation parameters are indicated by an asterisk (*).

CLP Organic Parameters

* Holding times
  GC/MS instrument performance check
* Initial and continuing calibrations
* Blanks
* Surrogate recovery
* Matrix spike/matrix spike duplicate
* Laboratory control sample or blank spike *
* Field duplicates
* Internal standard performance
  Target compound identification
  Tentatively identified compounds
  Compound quantitation
  Reported detection limits
  System performance
* Overall assessment of data for the SDG

CLP Inorganic Parameters

* Holding times
* Initial and continuing calibrations
* Blanks
* Matrix spike
* Laboratory control sample or blank spike
Field duplicates
* Matrix duplicates
  ICP interference check sample
  GFAA quality control
* ICP serial dilution
  Sample result verification
  Analyte quantitation
  Reported detection limits
* Overall assessment of data for the SDG

Non-CLP Organic and Inorganic Parameters

* Method compliance
* Holding times
* Initial and continuing calibrations
* Blanks
* Matrix spike/matrix spike duplicate
* Laboratory control sample or blank spike
* Field duplicates
* Matrix duplicates
* Surrogate recovery
  Analyte quantitation
  Reported detection limits
* Overall assessment of data for the SDG

DATA VALIDATION QUALIFIERS AND CODES

Data Validation Qualifiers and Codes

U1	Compound is nondetected due to laboratory blank contamination
U2	Compound is nondetected due to field blank contamination
U4	Compound is nondetected because of common laboratory contamination
J0	Compound is estimated due to internal standard exceedance
J1	Compound is estimated due to noncompliant instrument performance criteria
J2	Compound is estimated due to laboratory duplicate precision exceedance
J3	Compound is estimated due to surrogate/LCS/MS exceedance
J4	Compound is estimated due to serial dilution exceedance
J5	Compound is estimated due to holding time exceedance
J6	Compound is estimated due to field duplicate precision exceedance
J7	Compound is estimated due to calibration exceedance
J8	Compound is estimated due to calibration range exceedance
J9	Compound is estimated due to interference check exceedance (metals) or confirmation problems (dual column analyses)
UJ9	Compound is nondetected and estimated due to confirmation problems (dual column analyses)
R0	Compound is rejected due to internal standard exceedance
R1	Compound is rejected due to holding time exceedance
R2	Compound is rejected due to surrogate/LCS/MS exceedance
R3	Compound is rejected due to noncompliant instrument performance criteria
R7	Compound is rejected due to calibration exceedance

TABLE 1
CURSORY DATA VALIDATION SUMMARY

Analysis{PRIVATE}	Holding Times	Surrogates	MS/MSD	Matrix Duplicates	LCS	Blanks	Calibrations	Internal Standards	Field Duplicates	Other
TO-15	✓	Pg. 6	✓	N/A	✓	Pg. 7	✓	Pg. 7	Pg. 7	Pg. 8
EPA 3C	✓	N/A	✓	N/A	✓	✓	✓	N/A	Pg. 9	Pg. 9
EPA 25C	✓	N/A	✓	N/A	✓	✓	Pg. 10	N/A	Pg. 10	Pg. 10

Notes:
✓ indicates that all quality control criteria were met for the parameter as specified in the prescribed methods and data validation guidelines.
N/A indicates the parameter is not applicable to an analysis.
If criteria were not met and the data were qualified, a page number is indicated where the qualification is detailed.
The data were evaluated for all validation criteria and were found to be in control except where noted. Any outliers are described in the text.

TABLE 2
FULL DATA VALIDATION SUMMARY
Sample SGCSSG001 and SG04SG004

Analysis{PRIVATE }	GC/MS Tuning	Target Compound List Identification	Compound or Analyte Quantification	Reported Detection Limits	Tentatively Identified Compounds	System Performance	Interference Check Sample	Graphite Furnace Quality Control
TO-15	✓	✓	✓	✓	N/A	✓	N/A	N/A
EPA 3C	N/A	N/A	✓	✓	N/A	✓	N/A	N/A
EPA 25C	N/A	N/A	✓	✓	N/A	✓	N/A	N/A

Notes:
✓ indicates that all quality control criteria were met for the parameter as specified in the prescribed methods and data validation guidelines.
N/A indicates the parameter is not applicable to an analysis.
If criteria were not met and the data were qualified, a page number is indicated where the qualification is detailed.
The data were evaluated for all validation criteria and were found to be in control except where noted. Any outliers found are described below.

DATA ASSESSMENT

TO-15 ANALYSIS

I. Surrogate Recovery

A. Due to surrogate recovery problems, the following detected results are qualified as estimated (J3).

- 1,1-dichloroethane, 1,2,4-trimethylbenzene, 1,2-dichloro-1,1,2,2-tetrafluoroethane, 1,3,5-trimethylbenzene, 4-ethyltoluene, acetone, benzene, chloroethane, chloromethane, cis-1,2-dichloroethene, cyclohexane, dichlorodifluoromethane, ethylbenzene, heptane, hexane, m,p-xylenes, methylene chloride, o-xylene, propylene, toluene, trichloroethene and vinyl chloride in samples SG04SG005 and SG27SG002

- 2-butanone, t-1,2-dichloroethylene and tetrachloroethylene in samples SG04SG005

- ethanol, hexachlorobutadiene and styrene in sample SG27SG002

The surrogates outside of QC limits are listed below.

Sample ID	Surrogate	% R	QC Limits
SG04SG005	4-bromofluorobenzene	146	75-125
SG27SG002	4-bromofluorobenzene	134	75-125

High percent recoveries indicate that detected results may be biased high.

II. Blank Contamination

A. Due to common laboratory contamination, the following results are considered nondetected (U4).

- acetone in samples SG03SG004, SG25SG008 and SGCSSG001
- methylene chloride in samples SG01SG008, SG04SG005DL, SG25SG008, SG27SG002 and SGCSSG001
- 2-butanone in samples SG03SG004, SG04SG004, SG04SG004DL, SG25SG008 and SGCSSG001

Acetone, methylene chloride, and 2-butanone are considered common laboratory contaminants when found at levels less than 5x the CRQL in environmental samples and not found in the associated blanks.

B. Due to method blank contamination, the following results are considered nondetected (U1).

- propylene in sample SG25SG008

The following compounds were detected in the associated method blanks at the concentrations noted below.

Compound	Blank ID	Concentration, ppbv
Propylene	MBA040702-1	0.86

Detected results less than 5x the blank contamination were qualified.

III. Internal Standards

A. Due to internal standard problems, the following detected and nondetected results are qualified as estimated (J0/UJ0).

- All compounds quantitated using 1,4-difluorobenzene in sample SG04SG004

The internal standard area counts in the samples listed above were less than one half of the reference standard and are listed below.

Sample	Internal Standard	Value	QC Limits
SG04SG004	1,4-difluorobenzene	2619669	4232411 - 16929644

Internal standard area counts of less than 50% of the standard area count may indicate a loss of instrument sensitivity.

IV. Field Duplicates

A. The following RPDs were obtained for the field duplicate samples SG04SG003 / SG04SG004:

- 157% for propylene
- 105% for dichlorodifluoromethane
- 150% for chloromethane
- 125% for 1,2-dichloro-1,1,2,2-tetrafluoromethane
- 130% for vinyl chloride
- 132% for chloroethane
- NQ for acetone
- 115% for methylene chloride
- NQ for carbon disulfide
- NQ for 1,1,2-trichloro-1,2,2-trifluoroethane
- NQ for t-1,2-dichloroethylene
- 140% for 1,1-dichloroethane
- 47% for 2-butanone
- 144% for cis-1,2-dichloroethene
- 120% for hexane
- NQ for 1,2-dichloroethane
- 126% for benzene
- 129% for cyclohexane
- 64% for trichloroethene
- 56% for heptane
- 153% for toluene
- 15% for tetrachloroethylene
- 47% for ethylbenzene

- 51% for m,p-xylenes
- NQ for styrene
- 91% for o-xylene
- 28% for 1,2,4-trimethylbenzene
- NQ for 1,2,4-trichlorobenzene

For air samples, the field RPD guideline is ± 30%. The data are not qualified on the basis of field duplicate results.

V. Other Qualifications

A. The following results are qualified as estimated (J).

- All TO-15 detected results reported below the CRQL

Detected results reported below the CRQL are considered to be qualitatively acceptable, but quantitatively unreliable due to the uncertainty in analytical precision near the limit of detection.

Full Validation Criteria for Samples SGCSSG001 and SG04SG004

VI. GC/MS Tuning

A. The ion abundance criteria were met for the bromofluorobenzene (BFB) GC/MS performance check. The samples were analyzed within 12 hours of the associated performance check.

VII. Target Compound List (TCL) Identification

A. The relative retention times, mass spectra, and peak identifications of the samples were evaluated. Target compound identification was considered to be correct.

VIII. Compound Quantitation and Reported Detection Limits

A. Sample results were recalculated with the proper dilution factors, weights, volumes, and percent moisture used to calculate the sample results. The samples were found to be correctly quantitated. The reported detection limits were consistent with TtEMI's required report limits and reflect any dilutions, weights, volumes, and percent moisture.

IX. System Performance

A. The samples were evaluated for reconstructed ion chromatogram (RIC) baseline shifts, extraneous peaks, loss of resolution, and peak tailing. No system degradation was noted.

EPA METHOD 3C ANALYSIS

I. Other Qualifications

A. The following results are qualified as estimated (J).

- Carbon dioxide and methane results reported below the TtEMI required report limit (RL)

Detected results reported below the RL are considered to be qualitatively acceptable, but quantitatively unreliable due to the uncertainty in analytical precision near the limit of detection.

B. The following detected results are estimated (J8) due to calibration range exceedance.

- oxygen in samples SG01SG008, SG04SG004, SG25SG008, SG27SG002 and SGCSSG001
- methane in sample SG27SG002

Analytes detected at concentrations exceeding the calibration range are quantitatively unreliable. The samples listed above were not appropriately diluted and reanalyzed.

II. Field Duplicates

A. The following RPDs were obtained for the field duplicate samples SG04SG003 / SG04SG004:

- 83% for oxygen
- 89% for nitrogen
- 123% for methane
- 123% for carbon dioxide

For air samples, the field RPD guideline is $\pm$ 30. The data are not qualified on the basis of field duplicate results.

Full Validation Criteria for Samples SGCSSG001 and SG04SG004

III. Compound Quantitation and Reported Detection Limits

A. Sample results were recalculated, with the proper dilution factors, weights, volumes, and percent moisture used to calculate the sample results. The samples were found to be correctly quantitated. The reported detection limits were consistent with TtEMI's required report limits and reflect any dilutions, weights, volumes, and percent moisture.

IV. System Performance

A. The samples were evaluated for baseline shifts, extraneous peaks, loss of resolution, and peak tailing. No system degradation was noted.

EPA METHOD 25C ANALYSIS

I. Other Qualifications

A. The following detected results are estimated (J8) due to calibration range exceedance.

- methane in samples SG03SG004, SG04SG004, SG04SG005, SG27SG002 and SGCSSG001

Analytes detected at concentrations exceeding the calibration range are quantitatively unreliable. The samples listed above were not appropriately diluted and reanalyzed.

II. Field Duplicate

A. The following RPDs were obtained for the field duplicate samples SG04SG003 / SG04SG004:

- 120% for methane
- 119% for NMOC

For air samples, the field RPD guideline is ± 30%. The data are not qualified on the basis of field duplicate results.

Full Validation Criteria for Sample SGCSSG001 and SG04SG004

III. Compound Quantitation and Reported Detection Limits

A. Sample results were recalculated, with the proper dilution factors, weights, volumes, and percent moisture used to calculate the sample results. The samples were found to be correctly quantitated. The reported detection limits were consistent with TtEMI's required report limits and reflect any dilutions, weights, volumes, and percent moisture.

IV. System Performance

A. The samples were evaluated for baseline shifts, extraneous peaks, loss of resolution, and peak tailing. No system degradation was noted.

OVERALL ASSESSMENT OF DATA

I. Method Compliance and Additional Comments

A. Some results reported on the laboratory hardcopy do not match the electronic data deliverable (EDD) due to rounding. The laboratory ID reported in the EDD for EPA Method 25C for SG03SG004 was corrected to match the laboratory hardcopy. For EPA Method 25C sample SGCSSG001DL, the reporting limits were incorrect on the EDD printout and the nondetected result for NMOC is incorrect on the laboratory hardcopy.

B. Methane values exceeding the calibration range for samples SGCSSG001, SG03SG004, SG04SG004, SG04SG005 and SG25SG002 were obtained from EPA Method 3C.

C. Field blanks were used as matrix spike/matrix spike duplicate samples for the TO-15 analysis.

II. Usability

A. Due to high surrogate recovery in the TO-15 analyses, detected results for two samples were qualified as estimated. Due to poor internal standard response, results for compounds quantitated using internal standard 1,4-difluorbenzene for one sample are qualified as estimated. Due to common laboratory contamination, detected methylene chloride results for four samples and one dilution; detected acetone results for four samples; and detected 2-butanone results for four samples and one dilution are qualified as nondetected. Due to method blank contamination, the detected propylene result for one sample is qualified as nondetected.

B. Due to calibration range exceedance in the EPA Method 3C analyses, oxygen results for four samples and the methane result for one sample are qualified as estimated.

C. Samples SG04SG004 and SG04SG005 were diluted and reanalyzed for the TO-15 analysis due to matrix interference and/or poor internal standard response, or high surrogate recovery. Compounds qualified in sample SG04SG004 due to poor internal standard response should be used from the dilution and all remaining compounds should be used from the original analysis. Detected compounds in SG04SG005 should be used from the dilution and nondetected results should be used from the original analysis.

D. Sample SGCSSG001 was diluted and reanalyzed for the EPA 25C analysis. Methane results should be used from the dilution and NMOC results should be used from the original analysis.

E. The quality control criteria reviewed, other than those discussed above, were met and are considered acceptable. Sample results that were found to be rejected (R) are unusable for all purposes. Sample results that were found to be estimated (J) are usable for limited purposes only. Based upon the cursory and full data validation all other results are considered valid and usable for all purposes. In general, the absence of rejected data and the small number of qualifiers added to the EPA 3C data indicate high usability. The high number of qualifications made to the EPA 25C and TO-15 data indicate several analytical and/or matrix problems that limit the usability of the data.

DATA VALIDATION REPORT{PRIVATE }

Site:	Hunters Point Shipyard, Parcel E Nonstandard Data Gaps Investigation
Contract Task Order (CTO) No.: DO 003	
Laboratory:	Atmospheric Analysis & Consulting, Inc.
Data Reviewer:	ETHIX
Review Date:	5/18/02

Sample Delivery Group (SDG) No.: HAN11

Sample Nos.	SG02SG011	SG03SG007	SG25SG010 *	SGFBSG010
	SG02SG012	SG25SG009	SG25SG010DL	SGLPSG001
	SG03SG003 *	SG25SG009DL	SG25SG010DL2	

All samples were received intact and properly labeled.

* Full Validation Sample

Matrix: Air

Collection Dates: 4/3/02 and 4/5/02

The data were qualified according to the U.S. Environmental Protection Agency (EPA) documents "USEPA Contract Laboratory Program National Functional Guidelines for Organic Data Review" (October 1999) and "USEPA Contract Laboratory Program National Functional Guidelines For Inorganic Data Review" (February 1994). In addition, the Tetra Tech EM Inc. (TtEMI) documents "Data Validation Guidelines for CLP Organic Analyses," "Data Validation Guidelines for CLP Inorganic Analyses," "Data Validation Guidelines for Non-CLP Organic Analyses," "Data Validation Guidelines for Non-CLP Inorganic and Physical Analyses" (August 1, 2001), and the document entitled “TtEMI Comprehensive Long-term Environmental Action Navy II Analytical Services Statement of Work” (May 2000) were used along with other specified criteria in EPA methods. Data validation requirements are presented below.

I certify that all data validation criteria outlined in the above referenced documents were assessed, and any qualifications made to the data were in accordance with those documents.

Certified by

DATA VALIDATION REQUIREMENTS

Full validation includes all parameters listed below. Cursory validation parameters are indicated by an asterisk (*).

CLP Organic Parameters

* Holding times
  GC/MS instrument performance check
* Initial and continuing calibrations
* Blanks
* Surrogate recovery
* Matrix spike/matrix spike duplicate
* Laboratory control sample or blank spike *
* Field duplicates
* Internal standard performance
  Target compound identification
  Tentatively identified compounds
  Compound quantitation
  Reported detection limits
  System performance
* Overall assessment of data for the SDG

CLP Inorganic Parameters

* Holding times
* Initial and continuing calibrations
* Blanks
* Matrix spike
* Laboratory control sample or blank spike
Field duplicates
* Matrix duplicates
  ICP interference check sample
  GFAA quality control
* ICP serial dilution
  Sample result verification
  Analyte quantitation
  Reported detection limits
* Overall assessment of data for the SDG

Non-CLP Organic and Inorganic Parameters

* Method compliance
* Holding times
* Initial and continuing calibrations
* Blanks
* Matrix spike/matrix spike duplicate
* Laboratory control sample or blank spike
* Field duplicates
* Matrix duplicates
* Surrogate recovery
  Analyte quantitation
  Reported detection limits
* Overall assessment of data for the SDG

DATA VALIDATION QUALIFIERS AND CODES

Data Validation Qualifiers and Codes

U1	Compound is nondetected due to laboratory blank contamination
U2	Compound is nondetected due to field blank contamination
U4	Compound is nondetected because of common laboratory contamination
J0	Compound is estimated due to internal standard exceedance
J1	Compound is estimated due to noncompliant instrument performance criteria
J2	Compound is estimated due to laboratory duplicate precision exceedance
J3	Compound is estimated due to surrogate/LCS/MS exceedance
J4	Compound is estimated due to serial dilution exceedance
J5	Compound is estimated due to holding time exceedance
J6	Compound is estimated due to field duplicate precision exceedance
J7	Compound is estimated due to calibration exceedance
J8	Compound is estimated due to calibration range exceedance
J9	Compound is estimated due to interference check exceedance (metals) or confirmation problems (dual column analyses)
UJ9	Compound is nondetected and estimated due to confirmation problems (dual column analyses)
R0	Compound is rejected due to internal standard exceedance
R1	Compound is rejected due to holding time exceedance
R2	Compound is rejected due to surrogate/LCS/MS exceedance
R3	Compound is rejected due to noncompliant instrument performance criteria
R7	Compound is rejected due to calibration exceedance

TABLE 1
CURSORY DATA VALIDATION SUMMARY

Analysis{PRIVATE}	Holding Times	Surrogates	MS/MSD	Matrix Duplicates	LCS	Blanks	Calibrations	Internal Standards	Field Duplicates	Other
TO-15	✓	✓	✓	N/A	✓	Pg. 6	Pg. 7	✓	N/A	Pg. 8
EPA 3C	✓	N/A	✓	N/A	✓	Pg. 9	✓	N/A	N/A	Pg. 9
EPA 25C	✓	N/A	✓	N/A	✓	✓	✓	N/A	N/A	Pg. 11

Notes:
✓ indicates that all quality control criteria were met for the parameter as specified in the prescribed methods and data validation guidelines.
N/A indicates the parameter is not applicable to an analysis.
If criteria were not met and the data were qualified, a page number is indicated where the qualification is detailed.
The data were evaluated for all validation criteria and were found to be in control except where noted. Any outliers are described in the text.

TABLE 2
FULL DATA VALIDATION SUMMARY
Samples SG03SG003 and SG25SG010

Analysis{PRIVATE }	GC/MS Tuning	Target Compound List Identification	Compound or Analyte Quantification	Reported Detection Limits	Tentatively Identified Compounds	System Performance	Interference Check Sample	Graphite Furnace Quality Control
TO-15	✓	✓	✓	✓	N/A	✓	N/A	N/A
EPA 3C	N/A	N/A	✓	✓	N/A	✓	N/A	N/A
EPA 25C	N/A	N/A	✓	✓	N/A	✓	N/A	N/A

Notes:
✓ indicates that all quality control criteria were met for the parameter as specified in the prescribed methods and data validation guidelines.
N/A indicates the parameter is not applicable to an analysis.
If criteria were not met and the data were qualified, a page number is indicated where the qualification is detailed.
The data were evaluated for all validation criteria and were found to be in control except where noted. Any outliers found are described below.

DATA ASSESSMENT

TO-15 ANALYSIS

I. Blank Contamination

A. Due to common laboratory contamination, the following results are considered nondetected (U4).

- methylene chloride in samples SG02SG011, SG02SG012, SG03SG003, SG03SG007, SG25SG009, SG25SG009DL, SG25SG010, SG25SG010DL, SG25SG010DL2 and SGLPSG001
- acetone in samples SG02SG012, SG03SG003, SG25SG009DL and SG25SG010DL2
- 2-butanone in sample SG25SG010DL

Acetone, methylene chloride and 2-butanone are considered common laboratory contaminants when found at levels less than 5x the CRQL in environmental samples and not found in the associated blanks.

B. Due to field blank contamination, the following results are considered nondetected (U2).

- 1,2,4-trimethylbenzene in samples SG02SG011, SG02SG012, SG03SG007, SG25SG009, SG25SG009DL, SG25SG010 and SGLPSG001
- 1,2-dichlorobenzene in samples SG02SG012, SG03SG007, SG25SG009, SG25SG009DL, SG25SG010 and SGLPSG001
- 1,3-dichlorobenzene in samples SG03SG007, SG25SG009, SG25SG009DL, SG25SG010, SG25SG010DL and SGLPSG001
- 1,4-dichlorobenzene in samples SG02SG012, SG03SG007, SG25SG009, SG25SG009DL, SG25SG010, SG25SG010DL and SGLPSG001
- 2-butanone in sample SG25SG010
- acetone in samples SG02SG011, SG03SG007, SG25SG009, SG25SG010, SG25SG010DL and SGLPSG001
- carbon disulfide in samples SG25SG010, SG25SG010DL and SGLPSG001
- chloromethane in samples SG03SG007, SG25SG009, SG25SG009DL, SG25SG010, SG25SG010DL and SGLPSG001
- dichlorodifluoromethane in sample SGLPSG001
- ethanol in samples SG02SG011, SG02SG012, SG03SG007 and SGLPSG001
- heptane in samples SG25SG009, SG25SG009DL, SG25SG010, SG25SG010DL and SGLPSG001
- hexane in samples SG03SG003, SG25SG010, SG25SG010DL and SG25SG010DL2
- isopropyl alcohol in samples SG25SG009, SG25SG009DL and SGLPSG001
- m,p-xylenes in samples SG02SG011, SG02SG012, SG03SG003, SG03SG007, SG25SG009, SG25SG009DL, SG25SG010, SG25SG010DL, SG25SG010DL2 and SGLPSG001
- propylene in sample SGLPSG001
- styrene in samples SG25SG010 and SG25SG010DL
- toluene in samples SG02SG011, SG03SG003, SG25SG009, SG25SG009DL, SG25SG010, SG25SG010DL, SG25SG010DL2 and SGLPSG001

- trichlorofluoromethane in sample SGLPSG001

The following analytes were detected in the associated field blank at the concentrations noted below.

Analyte	Blank ID	Concentration, ppbv
1,2,4-trimethylbenzene	SGFBSG010	2.76
1,2-dichlorobenzene	SGFBSG010	1.16
1,3-dichlorobenzene	SGFBSG010	1.05
1,4-dichlorobenzene	SGFBSG010	1.89
2-butanone	SGFBSG010	9.1
acetone	SGFBSG010	57.72
carbon disulfide	SGFBSG010	41.27
chloromethane	SGFBSG010	1.74
dichlorodifluoromethane	SGFBSG010	0.86
ethanol	SGFBSG010	52.15
heptane	SGFBSG010	5.56
hexane	SGFBSG010	165.8
isopropyl alcohol	SGFBSG010	44.14
m,p-xylenes	SGFBSG010	1.53
propylene	SGFBSG010	1.19
styrene	SGFBSG010	1.88
toluene	SGFBSG010	41.27
trichlorofluoromethane	SGFBSG010	1.3

Detected results less than 5x the maximum blank contamination were qualified.

II. Calibrations

A. Due to a continuing calibration problem, the following nondetected results are qualified as estimated (UJ7).

- 2-hexanone in samples SG02SG011, SG02SG012, SG03SG003, SG03SG007, SG25SG009, SG25SG009DL, SG25SG010, SG25SG010DL, SG25SG010DL2, SGFBSG010 and SGLPSG001

The following continuing calibration had a percent differences (%D) of >25%.

Calibration Date	Compound	%D
4/9/02 12:06 pm	2-hexanone	28.4

III. Other Qualifications

A. The following results are qualified as estimated (J).

- All TO-15 detected results reported below the CRQL

Detected results reported below the CRQL are considered to be qualitatively acceptable, but quantitatively unreliable due to the uncertainty in analytical precision near the limit of detection.

B. The following detected results are estimated (J8) due to calibration range exceedance.

- ethanol in samples SG25SG009, SG25SG010 and SG25SG010DL

Analytes detected at concentrations exceeding the calibration range are quantitatively unreliable. The samples listed above were appropriately diluted and reanalyzed.

Full Validation Criteria for Samples SG03SG003 and SG25SG010

IV. GC/MS Tuning

A. The ion abundance criteria were met for the bromofluorobenzene (BFB) GC/MS performance check. The samples were analyzed within 12 hours of the associated performance check.

V. Target Compound List (TCL) Identification

A. The relative retention times, mass spectra, and peak identifications of the samples were evaluated. Target compound identification was considered to be correct.

VI. Compound Quantitation and Reported Detection Limits

A. Sample results were recalculated with the proper dilution factors and volumes used to calculate the sample results. The samples were found to be correctly quantitated. The reported detection limits were consistent with TtEMI's required report limits and reflect any dilutions and volumes.

VII. System Performance

A. The samples were evaluated for reconstructed ion chromatogram (RIC) baseline shifts, extraneous peaks, loss of resolution, and peak tailing. No system degradation was noted.

EPA METHOD 3C ANALYSIS

I. Blank Contamination

A. Due to field blank contamination, the following results are considered nondetected (U2).

- carbon dioxide in samples SG03SG007, SG25SG009 and SGLPSG001
- nitrogen in samples SG02SG011, SG02SG012, SG03SG003, SG03SG007, SG25SG009, SG25SG010 and SGLPSG001
- oxygen in samples SG02SG011, SG02SG012, SG03SG003, SG03SG007, SG25SG009, SG25SG010 and SGLPSG001

The following analytes were detected in the associated field, trip, and equipment rinsate blanks at the concentrations noted below.

Compound	Blank ID	Concentration, %
Carbon dioxide	SGFBSG010	0.05
Nitrogen	SGFBSG010	76.57
Oxygen	SGFBSG010	18.11

Detected results less than 5x the maximum blank contamination were qualified.

II. Other Qualifications

A. The following result is qualified as estimated (J).

- Carbon dioxide in sample SGFBSG010 detected result is reported below the CRQL

Detected results reported below the CRQL are considered to be qualitatively acceptable, but quantitatively unreliable due to the uncertainty in analytical precision near the limit of detection.

B. The following detected results are estimated (J8) due to calibration range exceedance.

- oxygen in samples SG02SG011, SG03SG007, SG25SG009, SGFBSG010 and SGLPSG001

Analytes detected at concentrations exceeding the calibration range are quantitatively unreliable. The samples listed above were not appropriately diluted and reanalyzed.

Full Validation Criteria for Samples SG03SG003 and SG25SG010

III. Compound Quantitation and Reported Detection Limits

A. Sample results were recalculated, with the proper dilution factors and volumes used to calculate the sample results. The samples were found to be correctly quantitated. The reported detection limits were consistent with TtEMI's required report limits and reflect any dilutions, weights, volumes, and percent moisture.

IV. System Performance

A. The samples were evaluated for baseline shifts, extraneous peaks, loss of resolution, and peak tailing. No system degradation was noted.

EPA METHOD 25C ANALYSIS

I. Other Qualifications

A. The following detected results are estimated (J8) due to calibration range exceedance.

- methane in samples SG03SG003 and SG25SG010

Analytes detected at concentrations exceeding the calibration range are quantitatively unreliable. The samples listed above were not appropriately diluted and reanalyzed.

Full Validation Criteria for Samples SG03SG003 and SG25SG010

II. Compound Quantitation and Reported Detection Limits

A. Sample results were recalculated, with the proper dilution factors and volumes used to calculate the sample results. The samples were found to be correctly quantitated. The reported detection limits were consistent with TtEMI's required report limits and reflect any dilutions and volumes.

III. System Performance

A. The samples were evaluated for baseline shifts, extraneous peaks, loss of resolution, and peak tailing. No system degradation was noted.

OVERALL ASSESSMENT OF DATA

I. Method Compliance and Additional Comments

A. Some results reported on the laboratory hardcopy do not match the electronic data deliverable (EDD) due to rounding. For the EPA 25C analyses, the client ID on the EDD printout was corrected for sample SGLPSG001.

B. Methane values exceeding the calibration range for samples SG03SG003 and SG25SG010 were obtained from EPA Method 3C.

II. Usability

A. Due to calibration problems in the TO-15 analyses, nondetected 2-hexanone results for eleven samples are qualified as estimated. Due to calibration range exceedance, detected ethanol results for two samples and one dilution are qualified as estimated. Due to common laboratory contamination, detected methylene chloride results for seven samples and three dilutions; detected acetone results for two samples and two dilutions; and detected 2-butanone results for one dilution are qualified as nondetected. Due to field blank contamination, detected m,p-xylenes results for seven samples and three dilutions; detected 1,2,4-trimethylbenzene results for six samples and one dilution; detected toluene results for five samples and three dilutions; detected 1,4-dichlorobenzene results for five samples and two dilutions; detected 1,2-dichlorobenzene and acetone results for five samples and one dilution; detected 1,3-dichlorobenzene and chloromethane results for four samples and two dilutions detected; detected ethanol results for four samples; detected carbon disulfide and isopropyl alcohol results for two samples and one dilution; detected heptane results for three samples and two dilutions; detected hexane results for two samples and two dilutions; and detected styrene results for one sample and one dilution; and detected 2-butanone, dichlorodifluoromethane, dichlorodifluoromethane, propylene and trichlorofluoromethane results for one sample are qualified as nondetected.

B. Due to calibration range exceedance in the EPA Method 3C analyses, detected oxygen results for five samples are qualified as estimated. Due to field blank contamination, detected carbon dioxide results for three samples, detected nitrogen and oxygen results for seven samples are qualified as nondetected.

C. Due to calibration range exceedance in the EPA Method 25C, methane results for two samples are qualified as estimated.

D. Samples SG25SG009 and SG25SG010 were diluted and reanalyzed for the TO-15 analysis due to ethanol exceeding the calibration range. All other compounds should be used from the original analysis and ethanol should be used from the appropriate dilution.

E. The quality control criteria reviewed, other than those discussed above, were met and are considered acceptable. Sample results that were found to be rejected (R) are unusable for all purposes. Sample results that were found to be estimated (J) are usable for limited purposes only. Based upon the cursory and full data validation all other results are considered valid and usable for all purposes. In general, the absence of rejected data and the small number of qualifiers added to the EPA 25C data indicates high usability. The high number of qualifications made to the TO-15 and EPA 3C data indicate sample collection problems that limit the usability of the data.

DATA VALIDATION REPORT{PRIVATE }

Site: Hunters Point Shipyard, Parcel E
Nonstandard Data Gaps Investigation
Contract Task Order (CTO) No.: DO 003
Laboratory: Atmospheric Analysis & Consulting, Inc.
Data Reviewer: ETHIX
Review Date: 5/18/02

Sample Delivery Group (SDG) No.: HAN12

Sample Nos.: SG03SG008

All samples were received intact and properly labeled.

* Full Validation Sample

Matrix: Air

Collection Date: 4/5/02

The data were qualified according to the U.S. Environmental Protection Agency (EPA) documents "USEPA Contract Laboratory Program National Functional Guidelines for Organic Data Review" (October 1999) and "USEPA Contract Laboratory Program National Functional Guidelines For Inorganic Data Review" (February 1994). In addition, the Tetra Tech EM Inc. (TtEMI) documents "Data Validation Guidelines for CLP Organic Analyses," "Data Validation Guidelines for CLP Inorganic Analyses," "Data Validation Guidelines for Non-CLP Organic Analyses," "Data Validation Guidelines for Non-CLP Inorganic and Physical Analyses" (August 1, 2001), and the document entitled "TtEMI Comprehensive Long-term Environmental Action Navy II Analytical Services Statement of Work" (May 2000) were used along with other specified criteria in EPA methods. Data validation requirements are presented below.

I certify that all data validation criteria outlined in the above referenced documents were assessed, and any qualifications made to the data were in accordance with those documents.

Certified by

DATA VALIDATION REQUIREMENTS

Full validation includes all parameters listed below. Cursory validation parameters are indicated by an asterisk (*).

CLP Organic Parameters

* Holding times
  GC/MS instrument performance check
* Initial and continuing calibrations
* Blanks
* Surrogate recovery
* Matrix spike/matrix spike duplicate
* Laboratory control sample or blank spike *
* Field duplicates
* Internal standard performance
  Target compound identification
  Tentatively identified compounds
  Compound quantitation
  Reported detection limits
  System performance
* Overall assessment of data for the SDG

CLP Inorganic Parameters

* Holding times
* Initial and continuing calibrations
* Blanks
* Matrix spike
* Laboratory control sample or blank spike
Field duplicates
* Matrix duplicates
  ICP interference check sample
  GFAA quality control
* ICP serial dilution
  Sample result verification
  Analyte quantitation
  Reported detection limits
* Overall assessment of data for the SDG

Non-CLP Organic and Inorganic Parameters

* Method compliance
* Holding times
* Initial and continuing calibrations
* Blanks
* Matrix spike/matrix spike duplicate
* Laboratory control sample or blank spike
* Field duplicates
* Matrix duplicates
* Surrogate recovery
  Analyte quantitation
  Reported detection limits
* Overall assessment of data for the SDG

DATA VALIDATION QUALIFIERS AND CODES

Data Validation Qualifiers and Codes

U1	Compound is nondetected due to laboratory blank contamination
U2	Compound is nondetected due to field blank contamination
U4	Compound is nondetected because of common laboratory contamination
J0	Compound is estimated due to internal standard exceedance
J1	Compound is estimated due to noncompliant instrument performance criteria
J2	Compound is estimated due to laboratory duplicate precision exceedance
J3	Compound is estimated due to surrogate/LCS/MS exceedance
J4	Compound is estimated due to serial dilution exceedance
J5	Compound is estimated due to holding time exceedance
J6	Compound is estimated due to field duplicate precision exceedance
J7	Compound is estimated due to calibration exceedance
J8	Compound is estimated due to calibration range exceedance
J9	Compound is estimated due to interference check exceedance (metals) or confirmation problems (dual column analyses)
UJ9	Compound is nondetected and estimated due to confirmation problems (dual column analyses)
R0	Compound is rejected due to internal standard exceedance
R1	Compound is rejected due to holding time exceedance
R2	Compound is rejected due to surrogate/LCS/MS exceedance
R3	Compound is rejected due to noncompliant instrument performance criteria
R7	Compound is rejected due to calibration exceedance

TABLE 1
CURSORY DATA VALIDATION SUMMARY

Analysis{PRIVATE}	Holding Times	Surrogates	MS/MSD	Matrix Duplicates	LCS	Blanks	Calibrations	Internal Standards	Field Duplicates	Other
TO-15	✓	✓	✓	N/A	✓	Pg. 6	Pg. 6	✓	N/A	Pg. 6
EPA 3C	✓	N/A	✓	N/A	✓	✓	✓	N/A	N/A	Pg. 7
EPA 25C	✓	N/A	✓	N/A	✓	✓	✓	N/A	N/A	✓

Notes:
✓ indicates that all quality control criteria were met for the parameter as specified in the prescribed methods and data validation guidelines.
N/A indicates the parameter is not applicable to an analysis.
If criteria were not met and the data were qualified, a page number is indicated where the qualification is detailed.
The data were evaluated for all validation criteria and were found to be in control except where noted. Any outliers are described in the text.

TABLE 2
FULL DATA VALIDATION SUMMARY
(Not Required)

Analysis{PRIVATE }	GC/MS Tuning	Target Compound List Identification	Compound or Analyte Quantification	Reported Detection Limits	Tentatively Identified Compounds	System Performance	Interference Check Sample	Graphite Furnace Quality Control
TO-15	N/A	N/A	N/A	N/A	N/A	N/A	N/A	N/A
EPA 3C	N/A	N/A	N/A	N/A	N/A	N/A	N/A	N/A
EPA 25C	N/A	N/A	N/A	N/A	N/A	N/A	N/A	N/A

Notes:
✓ indicates that all quality control criteria were met for the parameter as specified in the prescribed methods and data validation guidelines.
N/A indicates the parameter is not applicable to an analysis.
If criteria were not met and the data were qualified, a page number is indicated where the qualification is detailed.
The data were evaluated for all validation criteria and were found to be in control except where noted. Any outliers found are described below.

DATA ASSESSMENT

TO-15 ANALYSIS

Full validation was not required for this method.

I. Blank Contamination

A. Due to common laboratory contamination, the following result is considered nondetected (U1).

- methylene chloride in sample SG03SG008

Methylene chloride is considered a common laboratory contaminant when found at levels less than 5x the CRQL in environmental samples and not found in the associated blanks.

II. Calibrations

A. Due to a continuing calibration problem, the following nondetected result is qualified as estimated (UJ7).

- 2-hexanone in sample SG03SG008

The following continuing calibration had a percent difference (%D) of >25%.

Calibration Date	Compound	%D
4/9/02 12:06	2-hexanone	28.4

III. Other Qualifications

A. The following results are qualified as estimated (J).

- Six detected results reported below the CRQL

Detected results reported below the CRQL are considered to be qualitatively acceptable, but quantitatively unreliable due to the uncertainty in analytical precision near the limit of detection.

EPA METHOD 3C ANALYSIS

Full validation was not required for this method.

I. Other Qualifications

A. The following detected result is estimated (J8) due to calibration range exceedance:

- Oxygen in sample SG03SG008

Analytes detected at concentrations exceeding the calibration range are quantitatively unreliable. The sample listed above was not appropriately diluted and reanalyzed.

EPA METHOD 25C ANALYSIS

All cursory requirements were met by this method. Full validation was not required.

OVERALL ASSESSMENT OF DATA

I. Method Compliance and Additional Comments

A. Some results reported on the laboratory hardcopy do not match the electronic data deliverable (EDD) due to rounding.

II. Usability

A. Due to calibration problems in the TO-15 analyses, the 2-hexanone result for one sample is qualified as estimated. Due to common laboratory contamination, the detected methylene chloride result for one sample was qualified as nondetected.

B. Due to calibration range exceedance in the EPA Method 3C analyses, the oxygen result for one sample is qualified as estimated.

C. The quality control criteria reviewed, other than those discussed above, were met and are considered acceptable. Sample results that were found to be estimated (J) are usable for limited purposes only. Based upon the cursory and full data validation all other results are considered valid and usable for all purposes. In general, the absence of rejected data and the small number of qualifiers added to the data indicate high usability.

DATA VALIDATION REPORT{PRIVATE }

Site: Hunters Point Shipyard, Parcel E
Nonstandard Data Gaps Investigation
Contract Task Order (CTO) No.: DO 003
Laboratory: Atmospheric Analysis & Consulting, Inc.
Data Reviewer: ETHIX
Review Date: 6/27/02

Sample Delivery Group (SDG) No.: HAN13

Sample Nos.				
	1R01MW16ASG001	GMP02SG001	GMP07SG001 *	GMP12SG002
	1R01MW18ASG001 *	GMP03SG001	GMP07SG001RE	GMPAA001
	1R01MW366ASG001	GMP04SG001 *	GMP07SG002	GMPAA001RE
	1R01MW366ASG001RE	GMP05SG001	GMP08SG001 *	GMPFB001
	1R01MWI-5SG001	GMP06SG001	GMP11SG001	GMPFB001RE
	GMP01SG001	GMP06SG001RE	GMP12SG001	

Sample GMP11SG001 was received at a low pressure; the laboratory re-pressurized the canister prior to analysis, therefore results for all target compounds for all methods are qualified as estimated (J/UJ).

Matrix: Air

Collection Date: 4/22/02

The data were qualified according to the U.S. Environmental Protection Agency (EPA) documents "USEPA Contract Laboratory Program National Functional Guidelines for Organic Data Review" (October 1999) and "USEPA Contract Laboratory Program National Functional Guidelines For Inorganic Data Review" (February 1994). In addition, the Tetra Tech EM Inc. (TtEMI) documents "Data Validation Guidelines for CLP Organic Analyses," "Data Validation Guidelines for CLP Inorganic Analyses," "Data Validation Guidelines for Non-CLP Organic Analyses," "Data Validation Guidelines for Non-CLP Inorganic and Physical Analyses" (August 1, 2001), and the document entitled “TtEMI Comprehensive Long-term Environmental Action Navy II Analytical Services Statement of Work” (May 2000) were used along with other specified criteria in EPA methods. Data validation requirements are presented on page 2.

I certify that all data validation criteria outlined in the above referenced documents were assessed, and any qualifications made to the data were in accordance with those documents.

Certified by

DATA VALIDATION REQUIREMENTS

Full validation includes all parameters listed below. Cursory validation parameters are indicated by an asterisk (*).

CLP Organic Parameters

* Holding times
  GC/MS instrument performance check
* Initial and continuing calibrations
* Blanks
* Surrogate recovery
* Matrix spike/matrix spike duplicate
* Laboratory control sample or blank spike *
* Field duplicates
* Internal standard performance
  Target compound identification
  Tentatively identified compounds
  Compound quantitation
  Reported detection limits
  System performance
* Overall assessment of data for the SDG

CLP Inorganic Parameters

* Holding times
* Initial and continuing calibrations
* Blanks
* Matrix spike
* Laboratory control sample or blank spike
Field duplicates
* Matrix duplicates
  ICP interference check sample
  GFAA quality control
* ICP serial dilution
  Sample result verification
  Analyte quantitation
  Reported detection limits
* Overall assessment of data for the SDG

Non-CLP Organic and Inorganic Parameters

* Method compliance
* Holding times
* Initial and continuing calibrations
* Blanks
* Matrix spike/matrix spike duplicate
* Laboratory control sample or blank spike
* Field duplicates
* Matrix duplicates
* Surrogate recovery
  Analyte quantitation
  Reported detection limits
* Overall assessment of data for the SDG

DATA VALIDATION QUALIFIERS AND CODES

Data Validation Qualifiers and Codes

U1	Compound is nondetected due to laboratory blank contamination
U2	Compound is nondetected due to field blank contamination
U4	Compound is nondetected because of common laboratory contamination
J0	Compound is estimated due to internal standard exceedance
J1	Compound is estimated due to noncompliant instrument performance criteria
J2	Compound is estimated due to laboratory duplicate precision exceedance
J3	Compound is estimated due to surrogate/LCS/MS exceedance
J4	Compound is estimated due to serial dilution exceedance
J5	Compound is estimated due to holding time exceedance
J6	Compound is estimated due to field duplicate precision exceedance
J7	Compound is estimated due to calibration exceedance
J8	Compound is estimated due to calibration range exceedance
J9	Compound is estimated due to interference check exceedance (metals) or confirmation problems (dual column analyses)
UJ9	Compound is nondetected and estimated due to confirmation problems (dual column analyses)
R0	Compound is rejected due to internal standard exceedance
R1	Compound is rejected due to holding time exceedance
R2	Compound is rejected due to surrogate/LCS/MS exceedance
R3	Compound is rejected due to noncompliant instrument performance criteria
R7	Compound is rejected due to calibration exceedance

TABLE 1
CURSORY DATA VALIDATION SUMMARY

Analysis{PRIVATE }	Holding Times	Surrogates	MS/MSD	Matrix Duplicates	LCS	Blanks	Calibrations	Internal Standards	Field Duplicates	Other
TO-15	✓	Pg. 6	✓	N/A	✓	Pg. 6	✓	Pg. 7	Pg. 8	Pg. 9
EPA 3C	✓	N/A	✓	N/A	✓	✓	✓	N/A	Pg. 11	N/A
EPA 25C	✓	N/A	✓	N/A	✓	✓	✓	N/A	Pg. 12	N/A

Notes:
✓ indicates that all quality control criteria were met for the parameter as specified in the prescribed methods and data validation guidelines.
N/A indicates the parameter is not applicable to an analysis.
If criteria were not met and the data were qualified, a page number is indicated where the qualification is detailed.
The data were evaluated for all validation criteria and were found to be in control except where noted. Any outliers are described in the text.

TABLE 2
FULL DATA VALIDATION SUMMARY
Samples 1R01MW18ASG001, GMP04SG001, GMP07SG001 and GMP08SG001

Analysis{PRIVATE }	GC/MS Tuning	Target Compound List Identification	Compound or Analyte Quantification	Reported Detection Limits	Tentatively Identified Compounds	System Performance	Interference Check Sample	Graphite Furnace Quality Control
TO-15	✓	✓	✓	✓	N/A	✓	N/A	N/A
EPA 3C	N/A	N/A	✓	✓	N/A	✓	N/A	N/A
EPA 25C	N/A	N/A	✓	✓	N/A	✓	N/A	N/A

Notes:
✓ indicates that all quality control criteria were met for the parameter as specified in the prescribed methods and data validation guidelines.
N/A indicates the parameter is not applicable to an analysis.
If criteria were not met and the data were qualified, a page number is indicated where the qualification is detailed.
The data were evaluated for all validation criteria and were found to be in control except where noted. Any outliers found are described below.

DATA ASSESSMENT

TO-15 ANALYSIS

I. Surrogate Recovery

A. Due to surrogate recovery problems, detected results are qualified as estimated (J3) in the following samples:

- GMP01SG001, GMP02SG001, GMP03SG001, GMP06SG001RE, GMP07SG002, GMP08SG001, GMP11SG001, GMP12SG001 and GMP12SG002

The surrogates outside of QC limits are listed below.

Sample ID	Surrogate	% R	QC Limits
GMP01SG001	4-bromofluorobenzene	186	75 – 125%
GMP02SG001	4-bromofluorobenzene	132	75 – 125%
GMP03SG001	4-bromofluorobenzene	130	75 – 125%
GMP06SG001RE	4-bromofluorobenzene	139	75 – 125%
GMP07SG002	4-bromofluorobenzene	140	75 – 125%
GMP08SG001	4-bromofluorobenzene	140	75 – 125%
GMP11SG001	4-bromofluorobenzene	142	75 – 125%
GMP12SG001	4-bromofluorobenzene	230	75 – 125%
GMP12SG002	4-bromofluorobenzene	151	75 – 125%

High percent recoveries indicate that detected results may be biased high.

II. Blank Contamination

A. Due to common laboratory contamination, the following results are considered nondetected (U4).

- acetone in samples 1R01MW16ASG001, 1R01MW18ASG001, 1R01MW366ASG001, GMP06SG001, GMP07SG001 and GMPFB001
- methylene chloride in samples 1R01MW16ASG001, 1R01MW18ASG001, 1R01MW366ASG001, 1R01MW366ASG001RE, 1R01MWI-5SG001, GMP07SG001RE, GMP01SG001, GMP02SG001, GMP03SG001, GMP04SG001, GMP05SG001, GMP06SG001, GMP06SG001RE, GMP07SG001, GMP07SG002, GMP08SG001, GMP11SG001, GMP12SG001, GMP12SG002, GMPAA001 and GMPFB001RE
- 2-butanone in samples GMP07SG001RE, GMP02SG001, GMP04SG001, GMP07SG002, GMP12SG001 and GMP12SG002

Acetone, methylene chloride and 2-butanone are considered common laboratory contaminants when found at levels less than 5x the CRQL in environmental samples and not found in the associated blanks.

B. Due to field blank contamination, the following results are considered nondetected (U2).

- toluene in samples 1R01MW366ASG001, GMP03SG001, GMP05SG001, GMP06SG001RE, GMP07SG001RE, GMP07SG002, GMP11SG001 and GMP12SG002
- ethanol in samples 1R01MW366ASG001, GMP07SG001RE, GMP01SG001 and GMP06SG001RE
- propylene in samples GMP07SG001, GMP07SG001RE and GMP07SG002
- chloromethane in samples 1R01MW366ASG001 and 1R01MW366ASG001RE
- cyclohexane in sample 1R01MW366ASG001RE
- dichlorodifluoromethane in samples GMP08SG001 and GMP11SG001
- trichlorofluoromethane in sample GMP04SG001

The following analytes were detected in the associated field blank at the concentrations noted below.

Analyte	Blank ID	Concentration, ppbv
ethanol	GMPAA001	7.6
chloromethane	GMPFB001	2.6
cyclohexane	GMPFB001	2.6
dichlorodifluoromethane	GMPFB001	3.1
hexane	GMPFB001	1.5
propylene	GMPFB001	21.5
toluene	GMPFB001	1.5
trichlorofluoromethane	GMPFB001	4.3

Detected results less than 5x the maximum blank contamination were qualified.

III. Internal Standards

A. Due to internal standard problems, the following detected and nondetected results are qualified as estimated (J0/UJ0).

- All compounds quantitated using 1,4-difluorobenzene, bromochloromethane and chlorobenzene-d5 in samples GMPAA001 and GMPFB001

The internal standard area counts in the samples listed above were less than one half of the reference standard and are listed below.

Sample	Internal Standard	Value	QC Limits
GMPAA001	bromochloromethane	171432	283990 – 1135962
	1,4-difluorobenzene	802817	1327776 – 5311104
	chlorobenzene-d5	660849	1211364 – 4845458
GMPFB001	bromochloromethane	162362	283990 – 1135962
	1,4-difluorobenzene	453871	1327776- 5311104
	chlorobenzene-d5	674450	1211364 – 4845458

Internal standard area counts of less than 50% of the standard area count may indicate a loss of instrument sensitivity.

IV. Field Duplicates

A. The following RPDs were obtained for the field duplicate samples GMP12SG001 / GMP12SG002:

- 9% for propylene
- 12% for dichlorodifluoromethane
- 9% for 1,2-dichloro-1,1,2,2-tetrafluoromethane
- 12% for vinyl chloride
- 16% for chloroethane
- 25% for ethanol
- 15% for isopropyl alcohol
- 43% for methylene chloride
- 17% for carbon disulfide
- NQ for 1,1-dichloroethane
- 21% for 2-butanone (MEK)
- NQ for cis-1,2-dichloroethene
- 17% for hexane
- 15% for benzene
- 10% for cyclohexane
- 13% for heptane
- NQ for toluene
- NQ for chlorobenzene
- 6% for ethylbenzene
- 9% for m,p-xylenes
- 23% for o-xylene
- NQ for 1,4-dichlorobenzene

The following RPDs were obtained for the field duplicate samples GMP07SG001 / GMP07SG002:

- 7% for propylene
- 6% for dichlorodifluoromethane
- 8% for 1,2-dichloro-1,1,2,2-tetrafluoromethane
- NQ% for vinyl chloride
- NQ for acetone
- 32% for methylene chloride
- NQ% for carbon disulfide
- NQ% for 2-butanone (MEK)
- 10% for hexane
- 38% for benzene
- 14% for cyclohexane
- NQ for 1,4-dioxane
- 8% for heptane
- NQ for toluene
- 0% for m,p-xylenes
- NQ% for o-xylene
- NQ for 4-ethyltoluene

- NQ for 1,2,4-trimethylbenzene
- NQ for 1,2-dichlorobenzene
- NQ for hexachlorobutadiene
- NQ for 1,2,4-trichlorobenzene

For air samples, the field RPD guideline is ± 30%. The data are not qualified on the basis of field duplicate results.

V. Other Qualifications

A. The following results are qualified as estimated (J).

- All TO-15 detected results reported below the CRQL

Detected results reported below the CRQL are considered to be qualitatively acceptable, but quantitatively unreliable due to the uncertainty in analytical precision near the limit of detection.

Full Validation Criteria for Samples 1R01MW18ASG001, GMP04SG001, GMP07SG001 and GMP08SG001

VI. GC/MS Tuning

A. The ion abundance criteria were met for the bromofluorobenzene (BFB) GC/MS performance check. The samples were analyzed within 12 hours of the associated performance check.

VII. Target Compound List (TCL) Identification

A. The relative retention times, mass spectra, and peak identifications of the samples were evaluated. Target compound identification was considered to be correct.

VIII. Compound Quantitation and Reported Detection Limits

A. Sample results were recalculated with the proper dilution factors and volumes used to calculate the sample results. The samples were found to be correctly quantitated. The reported detection limits were consistent with TtEMI's required report limits and reflect any dilutions and volumes.

IX. System Performance

A. The samples were evaluated for reconstructed ion chromatogram (RIC) baseline shifts, extraneous peaks, loss of resolution, and peak tailing. High levels of petroleum hydrocarbons were present in most samples.

EPA METHOD 3C ANALYSIS

I. Field Duplicates

A. The following RPDs were obtained for the field duplicate samples GMP07SG001 / GMP07SG002:

- 54% for oxygen
- 32% for nitrogen
- 12% for methane
- 13% for carbon dioxide

The following RPDs were obtained for the field duplicate samples GMP12SG001 / GMP12SG002:

- 44% for oxygen
- 32% for nitrogen
- 16% for methane
- 19% for carbon dioxide

For air samples, the field RPD guideline is $\pm$ 30. The data are not qualified on the basis of field duplicate results.

II. Other Qualifications

A. The following results are qualified as estimated (J).

- One detected carbon dioxide result is reported below the CRQL

Detected results reported below the CRQL are considered to be qualitatively acceptable, but quantitatively unreliable due to the uncertainty in analytical precision near the limit of detection.

Full Validation Criteria for Samples 1R01MW18ASG001, GMP04SG001, GMP07SG001 and GMP08SG001

III. Compound Quantitation and Reported Detection Limits

A. Sample results were recalculated, with the proper dilution factors and volumes used to calculate the sample results. The samples were found to be correctly quantitated. The reported detection limits were consistent with TtEMI's required report limits and reflect any dilutions and volumes.

IV. System Performance

A. The samples were evaluated for baseline shifts, extraneous peaks, loss of resolution, and peak tailing. No system degradation was noted.

EPA METHOD 25C ANALYSIS

I. Field Duplicates

A. The following RPDs were obtained for the field duplicate samples GMP07SG001 / GMP07SG002:

- 11% for NMOC

The following RPDs were obtained for the field duplicate samples GMP12SG001 / GMP12SG002:

- 28% for NMOC

For air samples, the field RPD guideline is ± 30%. The data are not qualified on the basis of field duplicate results.

Full Validation Criteria for Samples 1R01MW18ASG001, GMP04SG001, GMP07SG001 and GMP08SG001

II. Compound Quantitation and Reported Detection Limits

A. Sample results were recalculated, with the proper dilution factors and volumes used to calculate the sample results. The samples were found to be correctly quantitated. The reported detection limits were consistent with TtEMI's required report limits and reflect any dilutions and volumes.

III. System Performance

A. The samples were evaluated for baseline shifts, extraneous peaks, loss of resolution, and peak tailing. No system degradation was noted.

OVERALL ASSESSMENT OF DATA

I. Method Compliance and Additional Comments

A. Some results reported on the laboratory hardcopy do not match the electronic data deliverable (EDD) due to rounding. In addition, all nondetected results for TO-15 analyses reporting limits in the EDD do not match the laboratory hardcopy. The results reported in the EDD for methane for 1R01MW366ASG001, GMP04SG001 and GMP08SG001 and NMOC for GMP08SG001 do not match the laboratory hardcopy. The nondetected oxygen result (0.14U %) reported on the laboratory hardcopy for 1R01MW366ASG001 does not match the EDD result (0.14 %).

B. For EPA 25C analyses, methane values are crossed out and "NA" recorded on the EDD printout due to methane being obtained from EPA 3C.

II. Usability

A. Due to canister pressure problems in the TO-15 analyses, results for two samples are qualified as estimated. Due to high surrogate recovery, detected results in eight samples and one reanalysis are qualified as estimated. Due to poor internal standard response, detected and nondetected results for all target compounds quantitated using internal standards 1,4-difluorobenzene, bromochloromethane and chlorobenzene-d5 for two samples are qualified as estimated. Due to common laboratory contamination, detected methylene chloride results for seventeen samples and four reanalysis; detected acetone results for six samples; and detected 2-butanone results for five samples and one reanalysis are qualified as nondetected. Due to field blank contamination, detected toluene results for six samples and two reanalysis; detected ethanol results for two samples and two reanalysis; detected propylene results for two samples and one reanalysis; detected dichlorodifluoromethane results for two samples; detected chloromethane results for one sample and one reanalysis; the detected cyclohexane result for one reanalysis; and the trichlorofluoromethane result for one sample are qualified as nondetected.

B. Due to sample canister pressure problems in the EPA Method 3C analyses, results for GMP11SG001 are qualified as estimated.

C. Due to canister pressure problems in the EPA Method 25C analyses, results for GMP11SG001 are qualified as estimated.

D. Samples 1R01MW366ASG01, GMP06SG001, GMP07SG001 for the TO-15 analyses were reanalyzed at a lower dilution due to the original analysis being over diluted. The reanalysis of these samples should be used as the final validated results.

Samples GMPAA001 and GMPFB001 for the TO-15 analyses were reanalyzed due to a low internal standard response. The samples were reanalyzed at a higher dilution with all internal standards within limits. The reanalysis of these samples should be used as the final validated results.

E. The quality control criteria reviewed, other than those discussed above, were met and are considered acceptable. Sample results that were found to be rejected (R) are unusable for all purposes. Sample results that were found to be estimated (J) are usable for limited purposes only. Based upon the cursory and full data validation all other results are considered valid and usable for all purposes. The

high number of qualifications made to the TO-15 data indicate several matrix problems that limit the usability of the data.

DATA VALIDATION REPORT{PRIVATE }

Site: Hunters Point Shipyard, Parcel E
Nonstandard Data Gaps Investigation
Contract Task Order (CTO) No.: DO 003
Laboratory: Atmospheric Analysis & Consulting, Inc.
Data Reviewer: ETHIX
Review Date: 7/8/02

Sample Delivery Group (SDG) No.: HAN14

Sample Nos.				
	IR01MW16ASG002 *	GMP01SG003	GMP04SG002	GMP12SG003
	IR01MW16ASG002DL	GMP01SG003DL	GMP05SG002	GMP12SG003DL
	IR01MW16ASG002DL2	GMP01SG003RE	GMP06SG002	GMP12SG003DL2
	IR01MW366ASG002	GMP02SG002	GMP07SG003	GMPAA002
	IR01MW366ASG002RE	GMP02SG002DL	GMP08SG002	GMPFB002
	GMP01SG002 *	GMP02SG002DL2	GMP11SG002	
	GMP01SG002DL	GMP03SG002	GMP11SG002DL	
	GMP01SG002DL2	GMP03SG003	GMP11SG002DL2	

* Full Validation Sample

Matrix: Air

Collection Date: 5/22/02

The data were qualified according to the U.S. Environmental Protection Agency (EPA) documents "USEPA Contract Laboratory Program National Functional Guidelines for Organic Data Review" (October 1999) and "USEPA Contract Laboratory Program National Functional Guidelines For Inorganic Data Review" (February 1994). In addition, the Tetra Tech EM Inc. (TtEMI) documents "Data Validation Guidelines for CLP Organic Analyses," "Data Validation Guidelines for CLP Inorganic Analyses," "Data Validation Guidelines for Non-CLP Organic Analyses," "Data Validation Guidelines for Non-CLP Inorganic and Physical Analyses" (August 1, 2001), and the document entitled “TtEMI Comprehensive Long-term Environmental Action Navy II Analytical Services Statement of Work” (May 2000) were used along with other specified criteria in EPA methods. Data validation requirements are presented on page 2.

I certify that all data validation criteria outlined in the above referenced documents were assessed, and any qualifications made to the data were in accordance with those documents.

Certified by

DATA VALIDATION REQUIREMENTS

Full validation includes all parameters listed below. Cursory validation parameters are indicated by an asterisk (*).

CLP Organic Parameters

* Holding times
  GC/MS instrument performance check
* Initial and continuing calibrations
* Blanks
* Surrogate recovery
* Matrix spike/matrix spike duplicate
* Laboratory control sample or blank spike *
* Field duplicates
* Internal standard performance
  Target compound identification
  Tentatively identified compounds
  Compound quantitation
  Reported detection limits
  System performance
* Overall assessment of data for the SDG

CLP Inorganic Parameters

* Holding times
* Initial and continuing calibrations
* Blanks
* Matrix spike
* Laboratory control sample or blank spike
Field duplicates
* Matrix duplicates
  ICP interference check sample
  GFAA quality control
* ICP serial dilution
  Sample result verification
  Analyte quantitation
  Reported detection limits
* Overall assessment of data for the SDG

Non-CLP Organic and Inorganic Parameters

* Method compliance
* Holding times
* Initial and continuing calibrations
* Blanks
* Matrix spike/matrix spike duplicate
* Laboratory control sample or blank spike
* Field duplicates
* Matrix duplicates
* Surrogate recovery
  Analyte quantitation
  Reported detection limits
* Overall assessment of data for the SDG

DATA VALIDATION QUALIFIERS AND CODES

Data Validation Qualifiers and Codes

U1	Compound is nondetected due to laboratory blank contamination
U2	Compound is nondetected due to field blank contamination
U4	Compound is nondetected because of common laboratory contamination
J0	Compound is estimated due to internal standard exceedance
J1	Compound is estimated due to noncompliant instrument performance criteria
J2	Compound is estimated due to laboratory duplicate precision exceedance
J3	Compound is estimated due to surrogate/LCS/MS exceedance
J4	Compound is estimated due to serial dilution exceedance
J5	Compound is estimated due to holding time exceedance
J6	Compound is estimated due to field duplicate precision exceedance
J7	Compound is estimated due to calibration exceedance
J8	Compound is estimated due to calibration range exceedance
J9	Compound is estimated due to interference check exceedance (metals) or confirmation problems (dual column analyses)
UJ9	Compound is nondetected and estimated due to confirmation problems (dual column analyses)
R0	Compound is rejected due to internal standard exceedance
R1	Compound is rejected due to holding time exceedance
R2	Compound is rejected due to surrogate/LCS/MS exceedance
R3	Compound is rejected due to noncompliant instrument performance criteria
R7	Compound is rejected due to calibration exceedance

TABLE 1
CURSORY DATA VALIDATION SUMMARY

Analysis{PRIVATE}	Holding Times	Surrogates	MS/MSD	Matrix Duplicates	LCS	Blanks	Calibrations	Internal Standards	Field Duplicates	Other
TO-15	✓	Pg. 6	✓	N/A	✓	Pg. 7	✓	Pg. 8	Pg. 10	Pg. 11
EPA 3C	✓	N/A	✓	N/A	✓	✓	✓	N/A	Pg. 13	✓
EPA 25C	✓	N/A	✓	N/A	✓	✓	✓	N/A	Pg. 14	N/A

Notes:
✓ indicates that all quality control criteria were met for the parameter as specified in the prescribed methods and data validation guidelines.
N/A indicates the parameter is not applicable to an analysis.
If criteria were not met and the data were qualified, a page number is indicated where the qualification is detailed.
The data were evaluated for all validation criteria and were found to be in control except where noted. Any outliers are described in the text.

TABLE 2
FULL DATA VALIDATION SUMMARY
Samples IR01MW16ASG002 and GMP01SG002

Analysis{PRIVATE }	GC/MS Tuning	Target Compound List Identification	Compound or Analyte Quantification	Reported Detection Limits	Tentatively Identified Compounds	System Performance	Interference Check Sample	Graphite Furnace Quality Control
TO-15	✓	✓	✓	✓	N/A	✓	N/A	N/A
EPA 3C	N/A	N/A	✓	✓	N/A	✓	N/A	N/A
EPA 25C	N/A	N/A	✓	✓	N/A	✓	N/A	N/A

Notes:
✓ indicates that all quality control criteria were met for the parameter as specified in the prescribed methods and data validation guidelines.
N/A indicates the parameter is not applicable to an analysis.
If criteria were not met and the data were qualified, a page number is indicated where the qualification is detailed.
The data were evaluated for all validation criteria and were found to be in control except where noted. Any outliers found are described below.

DATA ASSESSMENT

TO-15 ANALYSIS

I. Surrogate Recovery

A. Due to surrogate recovery problems, the following detected results are qualified as estimated (J3).

- Detected results for all target compounds in samples IR01MW16ASG002, IR01MW16ASG002DL, IR01MW366ASG002RE, GMP01SG002, GMP01SG002DL, GMP01SG002DL2, GMP01SG003, GMP01SG003DL, GMP01SG003RE, GMP02SG002, GMP02SG002DL, GMP02SG002DL2, GMP03SG002, GMP03SG003, GMP04SG002, GMP05SG002, GMP06SG002, GMP07SG003, GMP08SG002, GMP11SG002, GMP11SG002DL, GMP11SG002DL2, GMP12SG003, GMP12SG003DL, GMP12SG003DL2

The surrogates outside of QC limits are listed below.

Sample ID	Surrogate	% R	QC Limits
IR01MW16ASG002	4-bromofluorobenzene	260	75 – 125%
IR01MW16ASG002DL	4-bromofluorobenzene	130	75 – 125%
IR01MW366ASG002RE	4-bromofluorobenzene	130	75 – 125%
GMP01SG002	4-bromofluorobenzene	740	75 – 125%
GMP01SG002DL	4-bromofluorobenzene	580	75 – 125%
GMP01SG002DL2	4-bromofluorobenzene	260	75 – 125%
GMP01SG003	4-bromofluorobenzene	980	75 – 125%
GMP01SG003DL	4-bromofluorobenzene	270	75 – 125%
GMP01SG003RE	4-bromofluorobenzene	550	75 – 125%
GMP02SG002	4-bromofluorobenzene	550	75 – 125%
GMP02SG002DL	4-bromofluorobenzene	190	75 – 125%
GMP02SG002DL2	4-bromofluorobenzene	200	75 – 125%
GMP03SG002	4-bromofluorobenzene	260	75 – 125%
GMP03SG003	4-bromofluorobenzene	240	75 – 125%
GMP04SG002	4-bromofluorobenzene	220	75 – 125%
GMP05SG002	4-bromofluorobenzene	190	75 – 125%
GMP06SG002	4-bromofluorobenzene	180	75 – 125%
GMP07SG003	4-bromofluorobenzene	140	75 – 125%
GMP08SG002	4-bromofluorobenzene	260	75 – 125%
GMP11SG002	4-bromofluorobenzene	320	75 – 125%
GMP11SG002DL	4-bromofluorobenzene	270	75 – 125%
GMP11SG002DL2	4-bromofluorobenzene	360	75 – 125%
GMP12SG003	4-bromofluorobenzene	860	75 – 125%
GMP12SG003DL	4-bromofluorobenzene	530	75 – 125%
GMP12SG003DL2	4-bromofluorobenzene	440	75 – 125%

High percent recoveries indicate that detected results may be biased high.

II. Blank Contamination

A. Due to common laboratory contamination, the following results are considered nondetected (U4).

- methylene chloride in samples IR01MW16ASG002DL, IR01MW366ASG002, GMP01SG002, GMP01SG002DL, GMP01SG002DL2, GMP01SG003, GMP01SG003DL, GMP01SG003RE, GMP02SG002, GMP02SG002DL, GMP02SG002DL2, GMP03SG002, GMP03SG003, GMP04SG002, GMP05SG002, GMP06SG002, GMP07SG003, GMP08SG002, GMP11SG002, GMP11SG002DL, GMP11SG002DL2, GMP12SG003, GMP12SG003DL, GMP12SG003DL2, GMPAA002 and GMPFB002
- 2-butanone in sample GMPAA002
- acetone in sample GMP02SG002DL

Acetone, methylene chloride and 2-butanone are considered common laboratory contaminants when found at levels less than 5x the CRQL in environmental samples and not found in the associated blanks.

B. Due to field blank contamination, the following results are considered nondetected (U2).

- 1,1,2-trichloro-1,2,2-trifluoromethane in samples IR01MW16ASG002, IR01MW16ASG002DL, IR01MW16ASG002DL2, GMP01SG002DL, GMP01SG002DL2, GMP01SG003DL, GMP01SG003RE, GMP02SG002, GMP02SG002DL, GMP02SG002DL2, GMP03SG002, GMP03SG003, GMP04SG002, GMP05SG002, GMP06SG002, GMP07SG003, GMP08SG002, GMP11SG002DL, GMP11SG002DL2, GMP12SG003DL and GMP12SG003DL2
- toluene in samples GMP02SG002, GMP02SG002DL, GMP02SG002DL2, GMP03SG002, GMP03SG003, GMP04SG002, GMP05SG002, GMP06SG002, GMP07SG003, GMP08SG002, GMP11SG002DL, GMP11SG002DL2, GMP12SG003, GMP12SG003DL and GMP12SG003DL2
- m,p-xylenes in samples GMP05SG002, GMP07SG003, GMP11SG002, GMP11SG002DL, GMP12SG003, GMP12SG003DL and GMP12SG003DL2
- acetone and hexane in samples IR01MW366ASG002 and IR01MW366ASG002RE
- methylene chloride in sample IR01MW16ASG002

The following analytes were detected in the associated field blank at the concentrations noted below.

Analyte	Blank ID	Concentration, ppbv
1,1,2-trichloro-1,2,2-trifluoromethane	GMPAA002	2.6
toluene	GMPAA002	3.6
m,p-xylenes	GMPAA002	2.3
acetone	GMPAA002	25
hexane	GMPAA002	2
methylene chloride	GMPAA002	3.5

Detected results less than 5x the maximum blank contamination were qualified.

III. Internal Standards

A. Due to severe internal standard problems, the following detected results are qualified as estimated and the nondetected results are rejected (J0/R0).

- All compounds quantitated using chlorobenzene-d5 in sample IR01MW16ASG002DL2

The internal standard area count in the sample listed above was less than 10% of the reference standard and is listed below.

Sample	Internal Standard	Value	QC Limits
IR01MW16ASG002DL2	chlorobenzene-d5	147003	1054500 - 4218000

Internal standard area counts of less than 10% of the standard area count may indicate a severe loss in instrument sensitivity.

B. Due to internal standard problems, the following detected and nondetected results are qualified as estimated (J0/UJ0).

- All compounds quantitated using bromochloromethane, 1,4-difluorobenzene and chlorobenzene-d5 in samples GMP01SG002DL2, GMP02SG002DL, GMP02SG002DL2, IR01MW16ASG002DL, GMP11SG002DL, GMP11SG002DL2, GMP12SG003DL, GMP12SG003DL2
- All compounds quantitated using chlorobenzene-d5 in samples GMP01SG002, GMP01SG002DL, GMP01SG003, GMP02SG002 and GMP12SG003
- All compounds quantitated using bromochloromethane and chlorobenzene-d5 in samples GMP01SG003DL and GMP01SG003RE
- All compounds quantitated using bromochloromethane and 1,4-difluorobenzene in samples IR01MW16ASG002DL2 and IR01MW366ASG002RE

The internal standard area counts in the samples listed above were less than one half of the reference standard and are listed below.

Sample	Internal Standard	Value	QC Limits
GMP12SG003	chlorobenzene-d5	1019642	1051599 – 4206398
GMP01SG002	chlorobenzene-d5	856329	1051599 – 4206398
GMP01SG003	chlorobenzene-d5	831587	1051599 – 4206398
GMP02SG002	chlorobenzene-d5	1025024	1051599 – 4206398
GMP11SG002DL	bromochloromethane	316752	355713 – 1422854
	1,4-difluorobenzene	1116942	1272035 – 5088142
	chlorobenzene-d5	951802	1039193 – 4156774
Sample	Internal Standard	Value	QC Limits
GMP11SG002DL2	bromochloromethane	267089	358241 – 1432964
	1,4-difluorobenzene	821610	1238860 – 4955440
	chlorobenzene-d5	546152	1054500 – 4218000
GMP12SG003DL	bromochloromethane	337257	355713 – 1422854
	1,4-difluorobenzene	1199017	1272035 – 5088142

	chlorobenzene-d5	830990	1039193 – 4156774
GMP12SG003DL2	bromochloromethane	281392	358241 – 1432964
	1,4-difluorobenzene	929327	1238860 – 4955440
	chlorobenzene-d5	547034	1054500 – 4218000
GMP01SG002DL	chlorobenzene-d5	875538	1039193 – 4156774
GMP01SG003DL	bromochloromethane	333445	355713 – 1422854
	chlorobenzene-d5	825361	1039193 – 4156774
GMP01SG003RE	bromochloromethane	330271	358241 – 1432964
	chlorobenzene-d5	945736	1054500 – 4218000
GMP02SG002DL	bromochloromethane	325085	355713 – 1422854
	1,4-difluorobenzene	1214707	1272035 – 5088142
	chlorobenzene-d5	1017524	1039193 – 4156774
GMP02SG002DL2	bromochloromethane	318905	358241 – 1432964
	1,4-difluorobenzene	1245176	1238860 – 4955440
	chlorobenzene-d5	1048960	1054500 – 4218000
IR01MW366ASG002RE	bromochloromethane	351892	355713 – 1422854
	1,4-difluorobenzene	1172276	1272035 – 5088142
IR01MW16ASG002DL	bromochloromethane	319295	355713 – 1422854
	1,4-difluorobenzene	1105459	1272035 – 5088142
	chlorobenzene-d5	949178	1039193 – 4156774
IR01MW16ASG002DL2	bromochloromethane	200321	358241 – 1432964
	1,4-difluorobenzene	641348	1238860 – 4955440
GMP01SG002DL2	bromochloromethane	314373	358241 – 1432964
	1,4-difluorobenzene	1203886	1238860 – 4955440
	chlorobenzene-d5	853227	1054500 – 4218000

Internal standard area counts of less than 50% of the standard area count may indicate a loss of instrument sensitivity.

IV. Field Duplicates

A. The following RPDs were obtained for the field duplicate samples GMP01SG002 / GMP01SG003:

- 3% for propylene
- 32% for dichlorodifluoromethane
- NQ for chloromethane
- 0% for 1,2-dichloro-1,1,2,2-tetrafluoroethane

- 21% for vinyl chloride
- 11% for chloroethane
- 18% for methylene chloride
- NQ for carbon disulfide
- 10% for t-1,2-dichloroethylene
- 18% for 1,1-dichloroethane
- 11% for cis-1,2-dichloroethene
- 10% for hexane
- NQ for 1,2-dichloroethane
- 27% for benzene
- 5% for cyclohexane
- NQ for 1,2-dichloropropane
- 24% for trichloroethene
- 23% for heptane
- 45% for toluene
- 22% for tetrachloroethylene
- 11% for chlorobenzene
- 42% for ethylbenzene
- 44% for m,p-xylenes
- NQ for styrene
- 31% for o-xylene
- 33 % for 4-ethyltoluene
- 36% for 1,3,5-trimethylbenzene
- 30% for 1,2,4-trimethylbenzene
- 23% for 1,3-dichlorobenzene
- 8% for 1,4-dichlorobenzene
- 7% for 1,2-dichlorobenzene

B. The following RPDs were obtained for the field duplicate samples GMP03SG002 / GMP03SG003:

- 4% for propylene
- 0% for dichlorodifluoromethane
- NQ for chloromethane
- 9% for 1,2-dichloro-1,1,2,2-tetrafluoroethane
- 7% for vinyl chloride
- 53% for bromomethane
- 9% for chloroethane
- 40% for trichlorofluoromethane
- 46% for 1,1-dichloroethylene
- 18% for methylene chloride
- 22% for carbon disulfide
- 27% for 1,1,2-trichloro-1,2,2-trifluoroethane
- 26% for t-1,2-dichloroethylene
- 33% for 1,1-dichloroethane
- 14% for cis-1,2-dichloroethene
- 0% for hexane
- 36% for chloroform
- 63% for 1,2-dichloroethane

- 52% for 1,1,1-trichloroethane
- 4% for benzene
- 49% for carbon tetrachloride
- 2% for cyclohexane
- 39% for trichloroethene
- 1% for heptane
- 40% for cis-1,3-dichloropropene
- 43% for t-1,3-dichloropropene
- 29% for toluene
- 41% for 1,2-dibromomethane
- 29% for tetrachloroethylene
- 0% for chlorobenzene
- 18% for ethylbenzene
- 26% for m,p-xylenes
- 17% for o-xylene
- 26% for 4-ethyltoluene
- 20% for 1,3,5-trimethylbenzene
- 14% for 1,2,4-trimethylbenzene
- 26% for 1,3-dichlorobenzene
- 7% for 1,4-dichlorobenzene
- 15% for 1,2-dichlorobenzene
- 16% for 1,2,4-trichlorobenzene
- 25% for hexachlorobutadiene

For air samples, the field RPD guideline is $\pm$ 30%. The data are not qualified on the basis of field duplicate results.

V. Other Qualifications

A. The following results are qualified as estimated (J).

- All TO-15 detected results reported below the CRQL

Detected results reported below the CRQL are considered to be qualitatively acceptable, but quantitatively unreliable due to the uncertainty in analytical precision near the limit of detection.

B. The following detected results are qualified as estimated (J8) due to calibration range exceedance.

- cyclohexane in samples GMP01SG002 and GMP12SG003
- propylene in samples IR01MW16ASG002 and GMP02SG002
- heptane in sample IR01MW16ASG002
- hexane in sample GMP12SG003

Analytes detected at concentrations exceeding the calibration range are quantitatively unreliable. Samples listed above were appropriately diluted and reanalyzed.

Full Validation Criteria for Samples IR01MW16ASG002 and GMP01SG002

VI. GC/MS Tuning

A. The ion abundance criteria were met for the bromofluorobenzene (BFB) GC/MS performance check. The samples were analyzed within 12 hours of the associated performance check.

VII. Target Compound List (TCL) Identification

A. The relative retention times, mass spectra, and peak identifications of the samples were evaluated. Target compound identification was considered to be correct; however, matrix interference in the retention time region of 20 to 30 minutes was observed due to high petroleum hydrocarbon content in all field samples.

VIII. Compound Quantitation and Reported Detection Limits

A. Sample results were recalculated with the proper dilution factors and volumes used to calculate the sample results. The samples were found to be correctly quantitated. The reported detection limits were consistent with TtEMI's required report limits and reflect any dilutions and volumes.

IX. System Performance

A. The samples were evaluated for reconstructed ion chromatogram (RIC) baseline shifts, extraneous peaks, loss of resolution, and peak tailing. An abrupt baseline drop was observed at approximately 12 minutes into the analytical run in all samples and associated QC.

EPA METHOD 3C ANALYSIS

All cursory requirements were met by this method.

I. Field Duplicates

A. The following RPDs were obtained for the field duplicate samples GMP01SG002 / GMP01SG003:

- 26% for oxygen
- 5% for nitrogen
- 7% for methane
- 0% for carbon dioxide

B. The following RPDs were obtained for the field duplicate samples GMP03SG002 / GMP03SG003:

- 38% for oxygen
- 10% for nitrogen
- 2% for methane
- 0% for carbon dioxide

For air samples, the field RPD guideline is $\pm$ 30. The data are not qualified on the basis of field duplicate results.

Full Validation Criteria for Samples IR01MW16ASG002 and GMP01SG002

II. Compound Quantitation and Reported Detection Limits

A. Sample results were recalculated, with the proper dilution factors and volumes used to calculate the sample results. The samples were found to be correctly quantitated. The reported detection limits were consistent with TtEMI's required report limits and reflect any dilutions and volumes.

III. System Performance

A. The samples were evaluated for baseline shifts, extraneous peaks, loss of resolution, and peak tailing. No system degradation was noted.

EPA METHOD 25C ANALYSIS

All cursory requirements were met by this method.

I. Field Duplicates

A. The following RPDs were obtained for the field duplicate samples GMP01SG002 / GMP01SG003:

- 2% for NMOC

B. The following RPDs were obtained for the field duplicate samples GMP03SG002 / GMP03SG003:

- 0% for NMOC

For air samples, the field RPD guideline is ± 30%. The data are not qualified on the basis of field duplicate results.

Full Validation Criteria for Samples IR01MW16ASG002 and GMP01SG002

II. Compound Quantitation and Reported Detection Limits

A. Sample results were recalculated, with the proper dilution factors and volumes used to calculate the sample results. The samples were found to be correctly quantitated. The reported detection limits were consistent with TtEMI's required report limits and reflect any dilutions and volumes.

III. System Performance

A. The samples were evaluated for baseline shifts, extraneous peaks, loss of resolution, and peak tailing. No system degradation was noted.

OVERALL ASSESSMENT OF DATA

I. Method Compliance and Additional Comments

A. The acetone result reported in the EDD (Electronic Data Deliverable) for sample GMP11SG002 in the TO-15 analyses and the carbon monoxide result for sample GMP02SG002 in the EPA 3C analyses does not match the laboratory hardcopy. The reporting limits in the EDD for sample GMP12SG003 in the TO-15 analyses, and the reporting limit for NMOC for sample GMP02SG002 in the EPA 25C analyses do not match the laboratory hardcopy.

B. Analysis dates that are reported on the laboratory hardcopy Form Is are incorrect for the TO-15 analysis. The dates are reported 1 to 2 days earlier than the actual analysis date.

C. The field blank was used as a matrix spike/matrix spike duplicate sample.

D. IDs on hardcopy that begin with "1" should be "I".

II. Usability

A. Due to poor internal standard response in the TO-15 analyses, nondetected results for all target compounds quantitated using internal standard chlorobenzene-d5 in the secondary dilution of IR01MW16ASG002 are rejected.

E. Due to high surrogate recovery in the TO-15 analyses, detected results for thirteen original analyses, six dilutions and four secondary dilutions are qualified as estimated. Due to poor internal standard response, detected and nondetected results for all target compounds quantitated using internal standard chlorobenzene-d5 for original analyses, six dilutions, four secondary dilutions, and one reanalysis; detected and nondetected results for all target compounds quantitated using internal standard bromochloromethane for five dilutions, five secondary dilutions, and two reanalyses; and detected and nondetected results for all target compounds quantitated using internal standard 1,4-difluorobenzene for four dilutions, five secondary dilutions, and one reanalysis are qualified as estimated. Due to common laboratory contamination, detected methylene chloride results for fifteen original analyses, six dilutions, four secondary dilutions, and one reanalysis; the detected 2-butanone result for one sample; and the detected acetone result for one dilution are qualified as nondetected. Due to field blank contamination, detected 1,1,2-trichloro-1,2,2-trifluoroethane results for nine original analyses, six dilutions, five secondary dilutions, and one reanalysis; detected toluene results for nine original analyses, three dilutions, and three secondary dilutions; detected m,p-xylenes results for four original analyses, two dilutions and one secondary dilution; detected acetone and hexane results for one original analysis and one reanalysis; and the detected methylene chloride result for one original analysis are qualified as nondetected.

F. Samples IR01MW16ASG002 (diluted twice), GMP01SG002 (diluted twice), GMP01SG003, GMP02SG002 (diluted twice), GMP11SG002 (diluted twice), and GMP12SG003 (diluted twice) were diluted and reanalyzed for the TO-15 analysis due to low internal standard response for chlorobenzene-d5. All or most internal standards were out in the dilutions; therefore, the original analyses should be used as the final validated results due to fewer qualifications.

D. The quality control criteria reviewed, other than those discussed above, were met and are considered acceptable. Sample results that were found to be rejected (R) are unusable for all purposes. Sample results that were found to be estimated (J) are usable for limited purposes only. Based upon the cursory and full data validation all other results are considered valid and usable for all purposes. In general, the absence of qualifiers added to the EPA3C and EPA25C data indicates high usability. The high number of qualifications made to the TO-15 data indicate matrix problems that limit the usability of the data.

DATA VALIDATION REPORT{PRIVATE }

Site: Hunters Point Shipyard, Parcel E
Nonstandard Data Gaps Investigation
Contract Task Order (CTO) No.: DO 003
Laboratory: Atmospheric Analysis & Consulting, Inc.
Data Reviewer: ETHIX
Review Date: 7/8/02

Sample Delivery Group (SDG) No.: HAN15

Sample Nos. GMP05MER001 GMP06MER001 * GMP12MER001

* Full Validation Sample

Matrix: Air

Collection Date: 6/5/02

The data were qualified according to the U.S. Environmental Protection Agency (EPA) documents "USEPA Contract Laboratory Program National Functional Guidelines for Organic Data Review" (October 1999) and "USEPA Contract Laboratory Program National Functional Guidelines For Inorganic Data Review" (February 1994). In addition, the Tetra Tech EM Inc. (TtEMI) documents "Data Validation Guidelines for CLP Organic Analyses," "Data Validation Guidelines for CLP Inorganic Analyses," "Data Validation Guidelines for Non-CLP Organic Analyses," "Data Validation Guidelines for Non-CLP Inorganic and Physical Analyses" (August 1, 2001), and the document entitled "TtEMI Comprehensive Long-term Environmental Action Navy II Analytical Services Statement of Work" (May 2000) were used along with other specified criteria in EPA methods. Data validation requirements are presented on page 2.

I certify that all data validation criteria outlined in the above referenced documents were assessed, and any qualifications made to the data were in accordance with those documents.

Certified by

DATA VALIDATION REQUIREMENTS

Full validation includes all parameters listed below. Cursory validation parameters are indicated by an asterisk (*).

CLP Organic Parameters

* Holding times
  GC/MS instrument performance check
* Initial and continuing calibrations
* Blanks
* Surrogate recovery
* Matrix spike/matrix spike duplicate
* Laboratory control sample or blank spike *
* Field duplicates
* Internal standard performance
  Target compound identification
  Tentatively identified compounds
  Compound quantitation
  Reported detection limits
  System performance
* Overall assessment of data for the SDG

CLP Inorganic Parameters

* Holding times
* Initial and continuing calibrations
* Blanks
* Matrix spike
* Laboratory control sample or blank spike
Field duplicates
* Matrix duplicates
  ICP interference check sample
  GFAA quality control
* ICP serial dilution
  Sample result verification
  Analyte quantitation
  Reported detection limits
* Overall assessment of data for the SDG

Non-CLP Organic and Inorganic Parameters

* Method compliance
* Holding times
* Initial and continuing calibrations
* Blanks
* Matrix spike/matrix spike duplicate
* Laboratory control sample or blank spike
* Field duplicates
* Matrix duplicates
* Surrogate recovery
  Analyte quantitation
  Reported detection limits
* Overall assessment of data for the SDG

DATA VALIDATION QUALIFIERS AND CODES

Data Validation Qualifiers and Codes

U1	Compound is nondetected due to laboratory blank contamination
U2	Compound is nondetected due to field blank contamination
U4	Compound is nondetected because of common laboratory contamination
J0	Compound is estimated due to internal standard exceedance
J1	Compound is estimated due to noncompliant instrument performance criteria
J2	Compound is estimated due to laboratory duplicate precision exceedance
J3	Compound is estimated due to surrogate/LCS/MS exceedance
J4	Compound is estimated due to serial dilution exceedance
J5	Compound is estimated due to holding time exceedance
J6	Compound is estimated due to field duplicate precision exceedance
J7	Compound is estimated due to calibration exceedance
J8	Compound is estimated due to calibration range exceedance
J9	Compound is estimated due to interference check exceedance (metals) or confirmation problems (dual column analyses)
UJ9	Compound is nondetected and estimated due to confirmation problems (dual column analyses)
R0	Compound is rejected due to internal standard exceedance
R1	Compound is rejected due to holding time exceedance
R2	Compound is rejected due to surrogate/LCS/MS exceedance
R3	Compound is rejected due to noncompliant instrument performance criteria
R7	Compound is rejected due to calibration exceedance

TABLE 1
CURSORY DATA VALIDATION SUMMARY

Analysis{PRIVATE }	Holding Times	Surrogates	MS/MSD	Matrix Duplicates	LCS	Blanks	Calibration	Internal Standards	Field Duplicates	Other
TO-15	✓	Pg. 6	✓	N/A	✓	✓	✓	✓	N/A	N/A

Notes:
✓ indicates that all quality control criteria were met for the parameter as specified in the prescribed methods and data validation guidelines.
N/A indicates the parameter is not applicable to an analysis.
If criteria were not met and the data were qualified, a page number is indicated where the qualification is detailed.
The data were evaluated for all validation criteria and were found to be in control except where noted. Any outliers are described in the text.

TABLE 2
FULL DATA VALIDATION SUMMARY
Sample GMP06MER001

Analysis{PRIVATE }	GC/MS Tuning	Target Compound List Identification	Compound or Analyte Quantification	Reported Detection Limits	Tentatively Identified Compounds	System Performance	Interference Check Sample	Graphite Furnace Quality Control
TO-15	✓	✓	✓	✓	N/A	✓	N/A	N/A

Notes:
✓ indicates that all quality control criteria were met for the parameter as specified in the prescribed methods and data validation guidelines.
N/A indicates the parameter is not applicable to an analysis.
If criteria were not met and the data were qualified, a page number is indicated where the qualification is detailed.
The data were evaluated for all validation criteria and were found to be in control except where noted. Any outliers found are described below.

DATA ASSESSMENT

TO-15 ANALYSIS

I. Surrogate Recovery

A. Due to surrogate recovery problems, the following detected results are qualified as estimated (J3).

- Tert-butyl mercaptan in samples GMP06MER001 and GMP12MER001

The surrogates outside of QC limits are listed below.

Sample ID	Surrogate	% R	QC Limits
GMP06MER001	4-bromofluorobenzene	140	75 – 125%
GMP12MER001	4-bromofluorobenzene	270	75 – 125%

High percent recoveries indicate that detected results may be biased high.

II. Field Duplicates

A. Field duplicate samples were not collected for this method.

Full Validation Criteria for Sample GMP06MER001

III. GC/MS Tuning

A. The ion abundance criteria were met for the bromofluorobenzene (BFB) GC/MS performance check. The sample was analyzed within 12 hours of the associated performance check.

IV. Target Compound List (TCL) Identification

A. The relative retention times, mass spectra, and peak identifications of the sample were evaluated. Target compound identification was considered to be correct.

V. Compound Quantitation and Reported Detection Limits

A. Sample results were recalculated with the proper dilution factors and volumes used to calculate the sample results. The sample was found to be correctly quantitated. Project specific report limits were not specified for this method. The reported report limits reflect any dilutions and volumes used.

VI. System Performance

A. The sample was evaluated for reconstructed ion chromatogram (RIC) baseline shifts, extraneous peaks, loss of resolution, and peak tailing. No system degradation was noted.

OVERALL ASSESSMENT OF DATA

I. Method Compliance and Additional Comments

A. All analyses were conducted within all specifications of the requested method.

II. Usability

A. Due to high surrogate recovery in the TO-15 analyses, detected tert-butyl mercaptan results for two samples are qualified as estimated.

B. The quality control criteria reviewed, other than those discussed above, were met and are considered acceptable. Sample results that were found to be rejected (R) are unusable for all purposes. Sample results that were found to be estimated (J) are usable for limited purposes only. Based upon the cursory and full data validation all other results are considered valid and usable for all purposes. In general, the absence of qualifications made to the tetrahydrothiophene data indicates high usability. The high number of qualifications made to the t-butyl mercaptan data indicate matrix problems that limit the usability of the data.

DATA VALIDATION REPORT

Site:	Hunters Point Shipyard, HPS, DO 003 Data Gaps Investigation
Contract Task Order (CTO) No.:	G90190030301020711
Laboratory:	Atmospheric Analysis & Consulting, Inc.
Data Reviewer:	Richard Amano, Stacey Mavrakos, Erlinda Rauto, and Pei Geng.
Firm/Proj. No:	Laboratory Data Consultants, Inc./9024A
Review Date:	September 6 through September 9, 2002
Sample Delivery Group (SDG) No.:	HAN17

Sample Nos.:

GMP08SG003*	GMP02SG003DL*	1R01MW16ASG0003DL	GMP03SG004MSD
GMP08SG003DL*	GMP11SG003	1R01MW18ASG002	SGCSSG003MS
GMP07SG004	GMP11SG004	1R01MW18ASG002DL	SGCSSG003MSD
GMP06SG003	GMP11SG004RE	GMP08SG003MS	1R01MW366ASG003DUP
GMPFB004	SGLPSG002	GMP08SG003MSD	GMP06SG003DUP
GMP12SG004	SGCSSG003*	GMP08SG003DUP	GMPFB004MS
GMP01SG004*	1R01MW366ASG003	1R01MW366ASG004MS	GMPFB004MSD
GMP05SG003	1R01MW366ASG004	1R01MW366ASG004MSD	GMP11SG003DUP
GMP04SG003	1R01MWI-5SG002	1R01MW366ASG004DUP	SGLPSG002MS
GMP03SG004	1R01MWI-5SG002DL	GMP07SG004DUP	SGLPSG002MSD
GMP02SG003*	1R01MW16ASG0003	GMP03SG004MS	GMP12SG004DUP

* Full Validation Sample

Matrix: Air

Collection Date(s): July 31 through August 1, 2002

The data were qualified according to the U.S. Environmental Protection Agency (EPA) documents "USEPA Contract Laboratory Program National Functional Guidelines for Organic Data Review" (October 1999). In addition, the Tetra Tech EMI, Inc. documents "Data Validation Guidelines for CLP Organic Analyses," "Data Validation Guidelines for Non-CLP Organic Analyses" (March 1997), and the document entitled "PRC Comprehensive Long-term Environmental Action Navy II Analytical Services Statement of Work" (September 1998) were used along with other specified criteria in EPA methods. Data validation requirements are presented below.

I certify that all data validation criteria outlined in the above referenced documents were assessed, and any qualifications made to the data were in accordance with those documents.

Certified by Richard Amano
Principal Chemist

DATA VALIDATION REQUIREMENTS

Full validation includes all parameters listed below. Cursory validation parameters are indicated by an asterisk (*).

CLP Organic Parameters

*	Holding times
	GC/MS instrument performance check
*	Initial and continuing calibrations
*	Blanks
*	Surrogate recovery
*	Matrix spike/matrix spike duplicate
*	Laboratory control sample or blank spike
*	Field duplicates
*	Internal standard performance
	Target compound identification
	Tentatively identified compounds
	Compound quantitation
	Reported detection limits
	System performance
*	Overall assessment of data for the SDG

CLP Inorganic Parameters

*	Holding times
*	Initial and continuing calibrations
*	Blanks
*	Matrix spike
*	Laboratory control sample or blank spike
*	Field duplicates
*	Matrix duplicates
	ICP interference check sample
	GFAA quality control
*	ICP serial dilution
	Sample result verification
	Analyte quantitation
	Reported detection limits
*	Overall assessment of data for the SDG

Non-CLP Organic and Inorganic Parameters

*	Method compliance
*	Holding times
*	Initial and continuing calibrations
*	Blanks
*	Matrix spike/matrix spike duplicate
*	Laboratory control sample or blank spike
*	Field duplicates
*	Matrix duplicates
*	Surrogate recovery
	Analyte quantitation
	Reported detection limits
*	Overall assessment of data for the SDG

DATA VALIDATION QUALIFIERS AND CODES

Data Validation Qualifiers

UJ Estimated nondetected result

J Estimated detected result

R Rejected result

NJ Tentatively Identified Compound (TIC)

Data Validation Qualifier Codes

J1/R3 System performance

J2 Duplicate precision exceedance

J3/R2 Matrix spike, laboratory control sample (LCS), surrogate recovery exceedance

J4 Serial dilution

J5/R1 Holding time exceedance

J7/R7 Calibration exceedance

J8 Compound above calibration range

J9 ICP interference check sample

J0 Internal standard exceedance

U1 Laboratory blank contamination

U2 Field blank contamination

U4 Common laboratory contamination

G, D, M, L, H, Z TPH qualifiers

TABLE 1
SAMPLE CROSS REFERENCE TABLE
SAMPLE DELIVERY GROUP HAN17

Sample ID	Matrix	Date Collected	Quality Control ID	Validation Criteria*	Analyses												
					VOC (TO15)	TO-3C	TO-25C										
GMP08SG003	Air	7/31/02	MS/MSD/DUP	Full	X	X	X										
GMP07SG004	Air	7/31/02	DUP**		X	X**	X**										
GMP06SG003	Air	7/31/02	DUP**		X	X	X**										
GMPFB004	Air	7/31/02	MS/MSD**		X	X	X**										
GMP12SG004	Air	7/31/02	Field Blank		X	X	X										
GMP01SG004	Air	7/31/02		Full	X	X	X										
GMP05SG003	Air	7/31/02			X	X	X										
GMP04SG003	Air	7/31/02			X	X	X										
GMP03SG004	Air	7/31/02	MS/MSD**		X	X**	X										
GMP02SG003	Air	7/31/02	DUP**	Full	X	X**	X										
GMP11SG003	Air	7/31/02	Field Duplicate of GMP11SG003, DUP**		X	X	X**										
GMP11SG004	Air	7/31/02			X	X	X										
SGLPSG002	Air	8/1/02	MS/MSD**		X	X	X**										
SGCSSG003	Air	8/1/02	MS/MSD**	Full	X	X**	X**										
1R01MW366ASG003	Air	8/1/02	DUP**		X	X**	X										
1R01MW366ASG004	Air	8/1/02	Field Duplicate of 1R01MW366ASG003, MS/MSD/DUP**		X**	X	X										
1R01MWI-5SG002	Air	8/1/02			X	X	X										
1R01MW16ASG0003	Air	8/1/02			X	X	X										
1R01MW18ASG002	Air	8/1/02			X	X	X										

* = Cursory validation performed on all samples
** = MS/MSD/DUP performed on indicated parameters only
DUP = Matrix duplicate
*** = Full review performed on indicated parameters only
VOC = Volatile Organic Compounds
MS/MSD = Matrix Spike/Matrix Spike Duplicate
HC = Hydrocarbons

DATA ASSESSMENT

VOLATILE ORGANIC ANALYSIS (EPA Method TO-15)

I. Holding Times

A. The 30 day analysis holding time requirement for air samples in summa-cannisters was met.

II. Surrogate Recovery

A. Surrogates were not required by the method.

III. Matrix Spike/Matrix Spike Duplicate (MS/MSD)

A The MS/MSD analysis was performed on samples GMP08SG003* and 1R01MW366ASG004. The percent recoveries (%R) and relative percent differences (RPD) were within the QC limits.

B The DUP analysis was performed on samples GMP08SG003* and 1R01MW366ASG004. The relative percent differences (RPD) were within the QC limits.

IV. Blank Spike or Laboratory Control Sample (LCS)

A. The LCS QC samples were analyzed as required under the TTEMI SOW. The percent recoveries (%R) and relative percent differences (RPD) were within the QC limits.

V. Blank Contamination

A. Due to common laboratory contamination, the following results are considered nondetected (U4).

• Methylene chloride in samples	GMP08SG003* GMP08SG003DL* GMP07SG004 GMP06SG003 GMPFB004 GMP12SG004 GMP01SG004*	GMP03SG004 GMP02SG003DL* GMP11SG004 GMP11SG004RE SGLPSG002 SGCSSG003* 1R01MW366ASG004	1R01MWI-5SG002 1R01MWI-5SG002DL 1R01MW16ASG0003 1R01MW16ASG0003DL 1R01MW18ASG002 1R01MW18ASG002RE
• Acetone in samples	GMP08SG003DL* GMP07SG004 GMP06SG003	GMPFB004 GMP01SG004* GMP02SG003DL*	GMP11SG004 GMP11SG004RE
• 2-Butanone in samples	GMPFB004 SGCSSG003*	1R01MW366ASG003 1R01MW366ASG004	1R01MW18ASG002RE

Acetone, Methylene chloride, and 2-Butanone are considered common laboratory contaminants when found at levels less than 5x the CRQL in environmental samples and not found in the associated blanks.

B. No volatile contaminants were found in the method blanks.

C. Due to field blank contamination, the following results are considered nondetected (U2).

• Dichlorodifluoromethane in sample		GMP08SG003*	
• Chloromethane in samples	GMP08SG003DL*	GMP01SG004*	GMP11SG004RE
• Ethanol in samples	GMP11SG003	GMP11SG004RE	
• Carbon disulfide in samples	GMP08SG003* GMP08SG003DL* GMP07SG004 GMP06SG003 GMP12SG004	GMP01SG004* GMP05SG003 GMP04SG003 GMP03SG004 GMP02SG003*	GMP02SG003DL* GMP11SG003 GMP11SG004 GMP11SG004RE
• Toluene in samples	GMP08SG003* GMP08SG003DL* GMP07SG004 GMP12SG004 GMP01SG004*	GMP05SG003 GMP04SG003 GMP03SG004 GMP02SG003*	GMP02SG003DL* GMP11SG003 GMP11SG004 GMP11SG004RE
• Ethylbenzene in samples	GMP07SG004 GMP05SG003 GMP04SG003	GMP03SG004 GMP02SG003DL* GMP11SG003	GMP11SG004 GMP11SG004RE
• m,p-Xylenes in samples	GMP07SG004 GMP06SG003 GMP12SG004 GMP01SG004*	GMP05SG003 GMP04SG003 GMP03SG004 GMP02SG003DL*	GMP11SG003 GMP11SG004 GMP11SG004RE
• o-Xylene in samples	GMP07SG004 GMP06SG003 GMP12SG004	GMP05SG003 GMP03SG004 GMP11SG003	GMP11SG004 GMP11SG004RE
• 1,2,4-Trimethylbenzene in samples		GMP03SG004 GMP11SG003	GMP11SG004

The following compounds were detected in the associated field, trip, and equipment rinsate blanks at the concentrations noted below.

Field Blank ID	Compound	Concentration, ppbv
GMPFB004	Dichlorodifluoromethane	0.9
GMPFB004	Chloromethane	0.9
GMPFB004	Ethanol	6.3
GMPFB004	Carbon disulfide	1.4

Field Blank ID	Compound	Concentration, ppbv
GMPFB004	Toluene	6.3
GMPFB004	Ethylbenzene	1.2
GMPFB004	m,p-Xylenes	3.4
GMPFB004	o-Xylene	1.0
GMPFB004	1,2,4-Trimethylbenzene	1.4

Detected results less than 5x the blank contamination were qualified.

VI. Calibrations

A. Initial calibration was performed using required standard concentrations. Percent relative standard deviations (%RSD) were less than or equal to 30.0% for all volatile compounds for all volatile compounds with the exceptions listed below.

B. Continuing calibration was performed at the required frequencies as stated in the method.

C. The results with a greater than 10% difference between the recalculated and reported concentrations are listed below.

Calibration Date	Compound	Reported %D	Recalculated %D
8/2/02 (0801007)	1,2-Dichloroethane	26.0	14

Although this is a protocol violation, no data was qualified since the %D value was below the technical criteria of 30.0% .

D. All of the continuing calibration percent differences (%D) between the initial calibration RRF and the continuing calibration RRF were less than or equal to 30.0% .

VII. Internal Standards

A. All internal standard area counts were within -50% to +100% of the associated calibration standard and retention times were ±30 seconds of the associated calibration standard retention time with the exceptions listed below.

B. Due to internal standard problems, the following detected and nondetected results are qualified as estimated (Je/UJe).

- Bromoform, 1,1,2,2-Tetrachloroethane, Chlorobenzene, Ethylbenzene, Styrene, 1,3,5-Trimethybenzene, 1,3-Dichlorobenzene, 1,4-Dichlorobenzene, 1,2-Dichlorobenzene, 1,2,4-Trichlorobenzene, Hexachlorobutadiene, m,p-Xylenes, o-Xylene, Benzyl chloride, and 4-Ethyltoluene in sample GMP02SG003*

- Carbon tetrachloride, Bromodichloromethane, 1,2-Dichloropropane, cis-1,3-Dichloropropene, Trichloroethene, Dibromochloromethane, 1,1,2-Trichloroethane, Benzene, trans-1,3-Dichloropropene, 4-Methyl-2-pentanone, 2-Hexanone, Tetrachloroethene, Toluene, 1,2-Dibromoethane, Cyclohexane, 1,4-Dioxane, and Heptane in sample GMP11SG004

The internal standard area counts in the samples listed above were less than one half of the reference standard and are listed below.

Sample	Internal Standard	Area	QC Limits
GMP02SG003*	Chlorobenzene-d5	1076933	1112377.5-4449510
GMP11SG004	1,4-Difluorobenzene	670538	1182805-4731220

Internal standard area counts of less than 50% of the standard area count may indicate a loss of instrument sensitivity.

VIII. Field Duplicate

A. The following RPDs were obtained for the field duplicate samples GMP11SG003 / GMP11SG004:

- 200% for Ethanol
- 172% for Methylene chloride
- 63% for Carbon disulfide
- 89% for Benzene
- 96% for Heptane
- 92% for Toluene
- 200% for 1,4-Dichlorobenzene
- 200% for Acetone

The following RPDs were obtained for the field duplicate samples GMP11SG003 / GMP11SG004RE:

- 86% for Ethanol
- 93% for Methylene chloride
- 67% for Benzene
- 82% for Toluene
- 55% for 1,3,5-Trimethylbenzene
- 200% for 1,4-Dichlorobenzene
- 200% for Chloromethane
- 200% for Acetone
- 200% for 1,1,2-Trichloro-1,2,2-trifluoroethane
- 200% for 1,2-Dichloroethane
- 200% for 4-Ethyltoluene

The following RPDs were obtained for the field duplicate samples 1R01MW366ASG003 / 1R01MW366ASG004:

- 200% for Ethanol
- 200% for Isopropyl alcohol
- 191% for Methylene chloride
- 113% for Carbon disulfide
- 63% for 2-Butanone
- 142% for Hexane
- 60% for Cyclohexane

- 174% for Toluene
- 200% for Ethylbenzene
- 162% for m,p-Xylene
- 154% for o-Xylene
- 200% for 4-Ethyltoluene
- 200% for 1,3,5-Trimethylbenzene
- 200% for 1,2,4-Trimethylbenzene
- 200% for Tetrachlorothene
- 200% for 1,1-Dichlorothane

For air samples, the field RPD guideline is ± 50%. The data are not qualified on the basis of field duplicate results.

IX. Other Qualifications

A. The following results are qualified as estimated (Jg).

- All VOA detected results reported below the RL.

Detected results reported below the RL are considered to be qualitatively acceptable, but quantitatively unreliable due to the uncertainty in analytical precision near the limit of detection.

B. The following detected results are qualified as estimated (Jh).

• Propylene, Chloroethane, Hexane, Cyclohexane, 1,3,5-Trimethylbenzene, and 1,2,4-Trimethylbenzene in sample			GMP08SG003*
• Hexane in samples	GMP08SG003DL*	GMP03SG004	GMP02SG003*
• Dichlorodifluoromethane in sample			GMP01SG004*
• Chloroethane in sample			GMP05SG003
• Hexane and Heptane in sample			1R01MWI-5SG002
• Heptane in sample			1R01MW16ASG0003
• Propylene and Acetone in sample			1R01MW18ASG002

The above listed sample results exceeded the calibration range.

Full Validation Criteria for Samples GMP08SG003*, GMP08SG003DL*, GMP01SG004*, GMP02SG003*, GMP02SG003DL*, and SGCSSG003*

X. GC/MS Instrument Performance Checks

A. The ion abundance criteria were met for the bromofluorobenzene (BFB) GC/MS instrument performance check. The samples were analyzed within 12 hours of the associated instrument performance check.

XI. Target Compound List (TCL) Identification

A. The relative retention times, mass spectra, and peak identifications of the samples were evaluated. Target compound identification was considered to be correct.

XII. Compound Quantitation and Reported Detection Limits

A. Sample results were recalculated with the proper dilution factors, weights, volumes, and percent moisture used to calculate the sample results. The samples were found to be correctly quantitated. The reported detection limits were consistent with Tetra Tech EMI's required report limits and reflect any dilutions, weights, volumes, and percent moisture.

XIII. Tentatively Identified Compounds (TICs)

A. The TIC library searches were not performed for this SDG.

XIV. System Performance

A. The samples were evaluated for reconstructed ion chromatogram (RIC) baseline shifts, extraneous peaks, loss of resolution, and peak tailing. No system degradation was noted.

FIXED GASES (O_2, N_2, CO, CO_2, and Methane) ANALYSIS (by EPA Method TO-3C)

I. Holding Times

A. The 30 day analysis holding time requirement for air samples in summa-cannisters was met.

II. Surrogate Recovery

A. Surrogates were not required by the method.

III. Matrix Spike/Matrix Spike Duplicate (MS/MSD)

A The MS/MSD analysis was performed on samples GMP08SG003*, GMP03SG004, and SGCSSG003*. The percent recoveries (%R) and relative percent differences (RPD) were within the QC limits.

B The DUP analysis was performed on samples GMP07SG004, GMP02SG003*, and 1R01MW366ASG003. The relative percent differences (RPD) were within the QC limits.

IV. Blank Spike or Laboratory Control Sample (LCS)

A. The LCS QC samples were analyzed as required under the TTEMI SOW. The percent recoveries (%R) and relative percent differences (RPD) were within the QC limits.

V. Blank Contamination

A. Due to method blank contamination, the following results are considered nondetected (U1).

- Nitrogen in sample 1R01MWI-5SG002

The following compounds were detected in the associated method blanks at the concentrations noted below.

Blank ID	Compound	Concentration
MB3	Nitrogen	0.4%

Detected results less than 5x the blank contamination were qualified.

B. Due to field blank contamination, the following results are considered nondetected (U2).

• Oxygen and Nitrogen in samples	GMP08SG003*	GMP12SG004	GMP04SG003	GMP11SG003
	GMP07SG004	GMP01SG004*	GMP03SG004	GMP11SG004
	GMP06SG003	GMP05SG003	GMP02SG003*	

The following compounds were detected in the associated field blank at the concentrations noted below.

Field Blank ID	Compound	Concentration

Field Blank ID	Compound	Concentration
GMPFB004	Oxygen	20%
GMPFB004	Nitrogen	79%

Detected results less than 5x the blank contamination were qualified.

VI. Calibrations

A. Initial calibration of compounds was performed as required by the method. The percent relative standard deviations (%RSD) of calibration factors for compounds were less than or equal to 25.0% .

B. Calibration verification was performed at required frequencies. The percent differences (%D) of amounts in continuing standard mixtures were within the 25.0% QC limits.

VII. Field Duplicate

A. No RPDs above 50% were obtained for the field duplicate samples GMP11SG003 / GMP11SG004.

The following RPDs were obtained for the field duplicate samples 1R01MW366ASG003 / 1R01MW366ASG004:

- 125% for Oxygen
- 55% for Methane
- 51% for Carbon dioxide

For air samples, the field RPD guideline is ± 50%. The data are not qualified on the basis of field duplicate results.

VIII. Other Qualifications

A. No results were reported below the RL.

Full Validation Criteria for Samples GMP08SG003*, GMP01SG004*, GMP02SG003*, and SGCSSG003*

IX. Compound Quantitation and Reported Detection Limits

A. Sample results were recalculated, with the proper dilution factors, weights, volumes, and percent moisture used to calculate the sample results. The samples were found to be correctly quantitated. The reported detection limits were consistent with Tetra Tech EMI's required report limits and reflect any dilutions, weights, volumes, and percent moisture.

X. System Performance

A. The samples were evaluated for baseline shifts, extraneous peaks, loss of resolution, and peak tailing. No system degradation was noted.

XI. Compound Identification

A. Target compound identification was considered to be correct for samples GMP08SG003*, GMP01SG004*, GMP02SG003*, and SGCSSG003*.

NON-METHANE HYDROCARBONS and METHANE ANALYSIS (by EPA Method TO-25C)

I. Holding Times

A. The 30 day analysis holding time requirement for air samples in summa-cannisters was met.

II. Surrogate Recovery

A. Surrogates were not required by the method.

III. Matrix Spike/Matrix Spike Duplicate (MS/MSD)

A The MS/MSD analysis was performed on samples GMP08SG003*, GMPFB004, SGLPSG002, and SGCSSG003*. The percent recoveries (%R) and relative percent differences (RPD) were within the QC limits.

B The DUP analysis was performed on samples GMP07SG004, GMP06SG003, and GMP11SG003. The relative percent differences (RPD) were within the QC limits.

IV. Blank Spike or Laboratory Control Sample (LCS)

A. The LCS QC samples were analyzed as required under the TTEMI SOW. The percent recoveries (%R) and relative percent differences (RPD) were within the QC limits.

V. Blank Contamination

A. No non-methane hydrocarbon or methane contaminants were found in the method blanks. No samples were qualified based on the non-methane hydrocarbon or methane contaminants found in the field blank sample GMPFB004.

VI. Calibrations

A. Initial calibration of compounds was performed as required by the method. The percent relative standard deviations (%RSD) of calibration factors for compounds were less than or equal to 20.0% .

B. Calibration verification was performed at required frequencies. The percent differences (%D) of amounts in continuing standard mixtures were within the 25.0% QC limits.

VII. Field Duplicate

A. The following RPDs were obtained for the field duplicate samples GMP11SG003 / GMP11SG004:

- 82% for TNMHC as Methane

The following RPDs were obtained for the field duplicate samples 1R01MW366ASG003 / 1R01MW366ASG004:

- 71% for TNMHC

For air samples, the field RPD guideline is ± 50%. The data are not qualified on the basis of field duplicate results.

VIII. Other Qualifications

A. No results were reported below the RL.

Full Validation Criteria for Samples GMP08SG003*, GMP01SG004*, GMP02SG003*, and SGCSSG003*

IX. Compound Quantitation and Reported Detection Limits

A. Sample results were recalculated, with the proper dilution factors, weights, volumes, and percent moisture used to calculate the sample results. The samples were found to be correctly quantitated. The reported detection limits were consistent with Tetra Tech EMI's required report limits and reflect any dilutions, weights, volumes, and percent moisture.

X. System Performance

A. The samples were evaluated for baseline shifts, extraneous peaks, loss of resolution, and peak tailing. No system degradation was noted.

XI. Compound Identification

A. Target compound identification was considered to be correct for sample GMP08SG003*, GMP01SG004*, GMP02SG003*, and SGCSSG003*.

OVERALL ASSESSMENT OF DATA

I. Method Compliance and Additional Comments

A. All analyses were conducted within all specifications of the requested methods.

II. Usability

Volatile Organic Analysis

A. No results for volatile analysis were rejected in this SDG.

B. Due to common laboratory and field blank contamination, internal standard, and compound quantitation problems in the volatile analysis, several samples were qualified as estimated. The findings were as follows:

- Due to common laboratory contamination problems, Methylene chloride was qualified nondetect in twenty samples, Acetone was qualified nondetect in eight samples, and 2-Butanone was qualified nondetect in five samples.

- Due to field blank contamination problems, Dichlorodifluoromethane was qualified nondetect in one sample, Chloromethane and 1,2,4-Trimethylbenzene were qualified nondetect in three samples, Ethanol was qualified nondetect in two samples, Carbon disulfide was qualified nondetect in fourteen samples, Toluene was qualified nondetect in thirteen samples, Ethylbenzene and o-Xylene were qualified nondetect in eight samples, and m,p-Xylenes was qualified nondetect in eleven samples.

- Due to internal standard area count problems, Bromoform, 1,1,2,2-Tetrachloroethane, Chlorobenzene, Ethylbenzene, Styrene, 1,3,5-Trimethybenzene, 1,3-Dichlorobenzene, 1,4-Dichlorobenzene, 1,2-Dichlorobenzene, 1,2,4-Trichlorobenzene, Hexachlorobutadiene, m,p-Xylenes, o-Xylene, Benzyl chloride, 4-Ethyltoluene, Carbon tetrachloride, Bromodichloromethane, 1,2-Dichloropropane, cis-1,3-Dichloropropene, Trichloroethene, Dibromochloromethane, 1,1,2-Trichloroethane, Benzene, trans-1,3-Dichloropropene, 4-Methyl-2-pentanone, 2-Hexanone, Tetrachloroethene, Toluene, 1,2-Dibromoethane, Cyclohexane, 1,4-Dioxane, and Heptane results were qualified as estimated in one sample.

- All detected results reported below the RL were qualified as estimated.

- Due to compound quantitation problems, Cyclohexane, 1,3,5-Trimethylbenzene, 1,2,4-Trimethylbenzene, Dichlorodifluoromethane, and Acetone detected results were qualified as estimated in one sample, Hexane detected results were qualified as estimated in five samples, and Heptane, Chloroethane, and Propylene detected results were qualified as estimated in two samples.

C. Samples GMP08SG003*, GMP02SG003*, 1R01MWI-5SG002, and 1R01MW16ASG0003 were diluted due to sample results exceeding the calibration range, sample GMP11SG004 was reanalyzed due to low internal standard area counts, and sample 1R01MW18ASG002 was reanalyzed due to sample results exceeding the calibration range. For sample GMP08SG003*, all volatile results except Propylene, Chloroethane, Hexane, Cyclohexane, 1,3,5-Trimethylbenzene, and 1,2,4-Trimethylbenzene should be considered the most usable. The Propylene, Chloroethane, Hexane, Cyclohexane, 1,3,5-Trimethylbenzene, and 1,2,4-Trimethylbenzene results for sample GMP08SG003DL* should be

considered the most usable. For sample GMP02SG003*, all volatile results except 1,3,5-Trimethylbenzene, Bromoform, 1,1,2,2-Tetrachloroethane, Chlorobenzene, Ethylbenzene, Styrene, 1,3,5-Trimethybenzene, 1,3-Dichlorobenzene, 1,4-Dichlorobenzene, 1,2-Dichlorobenzene, 1,2,4-Trichlorobenzene, Hexachlorobutadiene, m,p-Xylenes, o-Xylene, Benzyl chloride, and 4-Ethyltoluene should be considered the most usable. The 1,3,5-Trimethylbenzene, Bromoform, 1,1,2,2-Tetrachloroethane, Chlorobenzene, Ethylbenzene, Styrene, 1,3,5-Trimethybenzene, 1,3-Dichlorobenzene, 1,4-Dichlorobenzene, 1,2-Dichlorobenzene, 1,2,4-Trichlorobenzene, Hexachlorobutadiene, m,p-Xylenes, o-Xylene, Benzyl chloride, and 4-Ethyltoluene results for sample GMP02SG003DL* should be considered the most usable, For sample GMP11SG004 , all volatile results except Carbon tetrachloride, Bromodichloromethane, 1,2-Dichloropropane, cis-1,3-Dichloropropene, Trichloroethene, Dibromochloromethane, 1,1,2-Trichloroethane, Benzene, trans-1,3-Dichloropropene, 4-Methyl-2-pentanone, 2-Hexanone, Tetrachloroethene, Toluene, 1,2-Dibromoethane, Cyclohexane, 1,4-Dioxane, and Heptane should be considered the most usable. The Carbon tetrachloride, Bromodichloromethane, 1,2-Dichloropropane, cis-1,3-Dichloropropene, Trichloroethene, Dibromochloromethane, 1,1,2-Trichloroethane, Benzene, trans-1,3-Dichloropropene, 4-Methyl-2-pentanone, 2-Hexanone, Tetrachloroethene, Toluene, 1,2-Dibromoethane, Cyclohexane, 1,4-Dioxane, and Heptane results for sample GMP11SG004RE should be considered the most usable. For sample 1R01MWI-5SG002, all volatile results except Hexane and Heptane should be considered the most usable. The Hexane and Heptane results for sample 1R01MWI-5SG002DL should be considered the most usable. For sample 1R01MW16ASG003, all volatile results except Heptane should be considered the most usable. The Heptane results for sample 1R01MW16ASG003DL should be considered the most usable. For sample 1R01MW18ASG002, all volatile results except Propylene and Acetone should be considered the most usable. The Propylene and Acetone results for sample 1R01MW18ASG002DL should be considered the most usable.

Fixed Gases Analysis

A. No results for fixed gases analysis were rejected in this SDG.

B. Due to common laboratory and field blank contamination, internal standard, and compound quantitation problems in the volatile analysis, several samples were qualified as estimated. The findings were as follows:

- Due to common laboratory contamination problems, Nitrogen was qualified nondetect in one sample.
- Due to method blank contamination problems, Oxygen and Nitrogen were qualified nondetect in eleven samples.

C. No samples were reextracted or reanalyzed for fixed gases analysis in this SDG.

Non-Methane Hydrocarbons Analysis

A. No results for non-methane hydrocarbons analysis were rejected in this SDG.

B. No samples were reextracted or reanalyzed for non-methane hydrocarbons analysis in this SDG.

III. The quality control criteria reviewed, other than those discussed above, were met and are considered acceptable. Sample results that were found to be estimated (J) are usable for limited purposes only. Based upon the full data validation, all other results are considered valid and usable for all purposes.

DATA VALIDATION REPORT

Site:	Hunters Point Shipyard, HPS, DO 003 Data Gaps Investigation
Contract Task Order (CTO) No.:	G9016-0030306020708
Laboratory:	Atmospheric Analysis & Consulting, Inc.
Data Reviewer:	Richard Amano, Stacey Mavrakos, and Pei Geng.
Firm/Proj. No:	Laboratory Data Consultants, Inc./9370B
Review Date:	November 14, 2002
Sample Delivery Group (SDG) No.:	HAN19

Sample Nos.: GMP22001* GMP22001DL* GMP22002 GMP22002DL

* Full Validation Sample

Matrix: Air

Collection Date(s): October 7, 2002

The data were qualified according to the U.S. Environmental Protection Agency (EPA) documents "USEPA Contract Laboratory Program National Functional Guidelines for Organic Data Review" (October 1999). In addition, the Tetra Tech EMI, Inc. documents "Data Validation Guidelines for CLP Organic Analyses," "Data Validation Guidelines for Non-CLP Organic Analyses" (March 1997), and the document entitled "PRC Comprehensive Long-term Environmental Action Navy II Analytical Services Statement of Work" (September 1998) were used along with other specified criteria in EPA methods. Data validation requirements are presented below.

I certify that all data validation criteria outlined in the above referenced documents were assessed, and any qualifications made to the data were in accordance with those documents.

Certified by Richard Amano
Principal Chemist

DATA VALIDATION REQUIREMENTS

Full validation includes all parameters listed below. Cursory validation parameters are indicated by an asterisk (*).

CLP Organic Parameters

*	Holding times
	GC/MS instrument performance check
*	Initial and continuing calibrations
*	Blanks
*	Surrogate recovery
*	Matrix spike/matrix spike duplicate
*	Laboratory control sample or blank spike
*	Field duplicates
*	Internal standard performance
	Target compound identification
	Tentatively identified compounds
	Compound quantitation
	Reported detection limits
	System performance
*	Overall assessment of data for the SDG

CLP Inorganic Parameters

*	Holding times
*	Initial and continuing calibrations
*	Blanks
*	Matrix spike
*	Laboratory control sample or blank spike
*	Field duplicates
*	Matrix duplicates
	ICP interference check sample
	GFAA quality control
*	ICP serial dilution
	Sample result verification
	Analyte quantitation
	Reported detection limits
*	Overall assessment of data for the SDG

Non-CLP Organic and Inorganic Parameters

*	Method compliance
*	Holding times
*	Initial and continuing calibrations
*	Blanks
*	Matrix spike/matrix spike duplicate
*	Laboratory control sample or blank spike
*	Field duplicates
*	Matrix duplicates
*	Surrogate recovery
	Analyte quantitation
	Reported detection limits
*	Overall assessment of data for the SDG

DATA VALIDATION QUALIFIERS AND CODES

Data Validation Qualifiers

UJ Estimated nondetected result

J Estimated detected result

R Rejected result

NJ Tentatively Identified Compound (TIC)

Data Validation Qualifier Codes

J1/UJ1/R3 System performance

J2/UJ2 Matrix Duplicate precision exceedance

J3/UJ3/R2 Accuracy exceedance in matrix spike, laboratory control sample (LCS), surrogate recovery

J4/UJ4 Serial dilution

J5/UJ5/R1 Holding time exceedance

J7/UJ7/R7 Initial and continuing Calibration exceedance

J8 Compound detected above calibration range

J9 Inorganics-ICP interference check sample / Organics - %D between columns

J0/UJ0/R0 Internal standard exceedance

U1 Method blank contamination

U2 Field blank contamination

U4 Common laboratory contamination

G, D, M, L, H, Z TPH qualifiers

Y Benzo(b)fluoranthene quantitated as the total of benzo(b) and benzo(k)fluoranthene

TABLE 1
SAMPLE CROSS REFERENCE TABLE
SAMPLE DELIVERY GROUP HAN19

Sample ID	Matrix	Date Collected	Quality Control ID	Validation Criteria*	Analyses												
					VOC (TO15)												
GMP22001	Air	10/7/02		Full	X												
GMP22002	Air	10/7/02	Field duplicate of GMP22001		X												

* = Cursory validation performed on all samples
** = MS/MSD/DUP performed on indicated parameters only
*** = Full review performed on indicated parameters only
VOC = Volatile Organic Compounds
MS/MSD = Matrix Spike/Matrix Spike Duplicate
DUP = Matrix duplicate

DATA ASSESSMENT

VOLATILE ORGANIC ANALYSIS (EPA Method TO-15)

I. Holding Times

A. The 30 day analysis holding time requirement for air samples in summa-cannisters was met.

II. Surrogate Recovery

A. The surrogate percent recoveries (%R) were within the QC limits with the exceptions listed below.

B. Due to surrogate recovery problems, the following detected results are qualified as estimated (J3).

- All volatile compounds in samples GMP22001* GMP22002DL

The surrogates outside of QC limits are listed below.

Sample ID	Surrogate	% R	QC Limits
GMP22001*	Bromofluorobenzene	360	60-130%
GMP22002DL	Bromofluorobenzene	390	60-130%

High percent recoveries indicate that detected results may be biased high.

III. Matrix Spike/Matrix Spike Duplicate (MS/MSD)

A The MS/MSD analysis was performed on sample EX2E001. The percent recoveries (%R) and relative percent differences (RPD) were within the QC limits.

B The DUP analysis was performed on sample EX2E001. The relative percent differences (RPD) were within the QC limits.

IV. Blank Spike or Laboratory Control Sample (LCS)

A. The LCS QC samples were analyzed as required under the TTEMI SOW. The percent recoveries (%R) and relative percent differences (RPD) were within the QC limits.

V. Blank Contamination

A. No common laboratory contaminants were found in the samples. No volatile contaminants were found in the method blanks. No field blanks were identified in this SDG.

VI. Calibrations

A. Initial calibration was performed using required standard concentrations. Percent relative standard deviations (%RSD) were less than or equal to 25.0% for all volatile compounds for all volatile compounds.

B. Continuing calibration was performed at the required frequencies as stated in the method. All of the continuing calibration percent differences (%D) between the initial calibration RRF and the continuing calibration RRF were less than or equal to 25.0% .

VII. Internal Standards

A. All internal standard area counts were within -50% to +100% of the associated calibration standard and retention times were ±30 seconds of the associated calibration standard retention time.

VIII. Field Duplicate

A. The following RPDs were obtained for the field duplicate samples GMP22001* / GMP22002:

- 200% for Bromomethane
- 52% for Acetone
- 200% for trans-1,2-Dichloroethene
- 200% for 1,1-Dichloroethane
- 200% for Tetrahydrofuran
- 200% for 4-Methyl-2-pentanone
- 51% for Carbon disulfide

The following RPDs were obtained for the field duplicate samples GMP22001DL* / GMP22002DL:

- 200% for Tetrahydrofuran
- 200% for Trichlorofluoromethane
- 200% for Dibromochloromethane
- 200% for Bromoform

For air samples, the field RPD guideline is ± 50%. The data are not qualified on the basis of field duplicate results.

IX. Other Qualifications

A. The following results are qualified as estimated (J).

- All VOA detected results reported below the RL.

Detected results reported below the RL are considered to be qualitatively acceptable, but quantitatively unreliable due to the uncertainty in analytical precision near the limit of detection.

B. The following detected results are qualified as estimated (J8).

- Acetone in sample GMP22002

The above listed sample results exceeded the calibration range.

Full Validation Criteria for Samples GMP22001* and GMP22001DL*

X. GC/MS Instrument Performance Checks

A. The ion abundance criteria were met for the bromofluorobenzene (BFB) GC/MS instrument performance check. The samples were analyzed within 24 hours of the associated instrument performance check..

XI. Target Compound List (TCL) Identification

A. The retention time, mass spectra, and peak identifications of the samples were evaluated. Target compound identification was considered to be correct.

B. The relative retention times (RRT) of all compound results in the samples were within the ±0.06 RRT from the CCV QC limits with the exceptions listed below.

Sample ID	Compound
GMP22001*	Propylene
GMP22001*	Dichlorodifluoromethane
GMP22001*	1,2-Dichloro-1,1,2,2-tetrafluoroethane
GMP22001*	Vinyl chloride
GMP22001*	Bromomethane
GMP22001*	Chloroethane
GMP22001*	Tetrahydrofuran
GMP22001DL*	Acetone
GMP22001DL*	Tetrahydrofuran

XII. Compound Quantitation and Reported Detection Limits

A. Sample results were recalculated with the proper dilution factors, weights, volumes, and percent moisture used to calculate the sample results. The samples were found to be correctly quantitated. The reported detection limits were consistent with Tetra Tech EMI's required report limits and reflect any dilutions, weights, volumes, and percent moisture.

XIII. Tentatively Identified Compounds (TICs)

A. The TIC library searches were not performed for this SDG.

XIV. System Performance

A. The samples were evaluated for reconstructed ion chromatogram (RIC) baseline shifts, extraneous peaks, loss of resolution, and peak tailing. No system degradation was noted.

OVERALL ASSESSMENT OF DATA

I. Method Compliance and Additional Comments

A. All analyses were conducted within all specifications of the requested methods.

II. Usability

Volatile Organic Analysis

A. No results for volatile analysis were rejected in this SDG.

B. Due to surrogate and compound quantitation problems in the volatile analysis, several samples were qualified as estimated. The findings were as follows:

- Due to surrogate recovery problems, all volatile detected results were qualified as estimated in two samples.
- All detected results reported below the RL were qualified as estimated.
- Due to compound quantitation problems, Acetone detected results were qualified as estimated in one sample.

C. Samples GMP22001* and GMP22002 were diluted due to sample results exceeding the calibration range. For sample GMP22001*, all volatile results should be considered the most usable. All volatile results for sample GMP22001DL* should not be considered usable. For sampleGMP22002, all volatile results except Acetone should be considered the most usable. The Acetone results for sample GMP22002DL should be considered the most usable.

III. The quality control criteria reviewed, other than those discussed above, were met and are considered acceptable. Sample results that were found to be estimated (J) are usable for limited purposes only. Based upon the full data validation, all other results are considered valid and usable for all purposes.

DATA VALIDATION REPORT

Site:	Hunters Point Shipyard, HPS, DO 003 Data Gaps Investigation
Contract Task Order (CTO) No.:	G9016.003.03.06.02.07.08
Laboratory:	Atmospheric Analysis & Consulting, Inc.
Data Reviewer:	Richard Amano, Stacey Mavrakos, Erlinda Rauto, and Felomina Tanguilig.
Firm/Proj. No:	Laboratory Data Consultants, Inc./9629A
Review Date:	January 9, 2003
Sample Delivery Group (SDG) No.:	HAN23

Sample Nos.: GMP23001 GMP22003* GMP23001MS GMP23001MSD GMP23001DUP

* Full Validation Sample

Matrix: Air

Collection Date(s): November 13, 2002

The data were qualified according to the U.S. Environmental Protection Agency (EPA) documents "USEPA Contract Laboratory Program National Functional Guidelines for Organic Data Review" (October 1999). In addition, the Tetra Tech EMI, Inc. documents "Data Validation Guidelines for CLP Organic Analyses," "Data Validation Guidelines for Non-CLP Organic Analyses" (March 1997), and the document entitled "PRC Comprehensive Long-term Environmental Action Navy II Analytical Services Statement of Work" (September 1998) were used along with other specified criteria in EPA methods. Data validation requirements are presented below.

I certify that all data validation criteria outlined in the above referenced documents were assessed, and any qualifications made to the data were in accordance with those documents.

Certified by Richard Amano
Principal Chemist

DATA VALIDATION REQUIREMENTS

Full validation includes all parameters listed below. Cursory validation parameters are indicated by an asterisk (*).

CLP Organic Parameters

*	Holding times
	GC/MS instrument performance check
*	Initial and continuing calibrations
*	Blanks
*	Surrogate recovery
*	Matrix spike/matrix spike duplicate
*	Laboratory control sample or blank spike
*	Field duplicates
*	Internal standard performance
	Target compound identification
	Tentatively identified compounds
	Compound quantitation
	Reported detection limits
	System performance
*	Overall assessment of data for the SDG

CLP Inorganic Parameters

*	Holding times
*	Initial and continuing calibrations
*	Blanks
*	Matrix spike
*	Laboratory control sample or blank spike
*	Field duplicates
*	Matrix duplicates
	ICP interference check sample
	GFAA quality control
*	ICP serial dilution
	Sample result verification
	Analyte quantitation
	Reported detection limits
*	Overall assessment of data for the SDG

Non-CLP Organic and Inorganic Parameters

*	Method compliance
*	Holding times
*	Initial and continuing calibrations
*	Blanks
*	Matrix spike/matrix spike duplicate
*	Laboratory control sample or blank spike
*	Field duplicates
*	Matrix duplicates
*	Surrogate recovery
	Analyte quantitation
	Reported detection limits
*	Overall assessment of data for the SDG

DATA VALIDATION QUALIFIERS AND CODES

Data Validation Qualifiers

UJ Estimated nondetected result

J Estimated detected result

R Rejected result

NJ Tentatively Identified Compound (TIC)

Data Validation Qualifier Codes

J1/R3 System performance

J2 Duplicate precision exceedance

J3/R2 Matrix spike, laboratory control sample (LCS), surrogate recovery exceedance

J4 Serial dilution

J5/R1 Holding time exceedance

J7/R7 Calibration exceedance

J8 Compound above calibration range

J9 ICP interference check sample

J0 Internal standard exceedance

U1 Laboratory blank contamination

U2 Field blank contamination

U4 Common laboratory contamination

G, D, M, L, H, Z TPH qualifiers

TABLE 1
SAMPLE CROSS REFERENCE TABLE
SAMPLE DELIVERY GROUP HAN23

Sample ID	Matrix	Date Collected	Quality Control ID	Validation Criteria*	Analyses												
					TO-3C	TO-25C											
GMP23001	Air	11/13/02	MS/MSD/DUP		X	X											
GMP22003*	Air	11/13/02		Full	X	X											

* = Cursory validation performed on all samples
** = MS/MSD/DUP performed on indicated parameters only
DUP = Matrix duplicate
*** = Full review performed on indicated parameters only
VOC = Volatile Organic Compounds
MS/MSD = Matrix Spike/Matrix Spike Duplicate
HC = Hydrocarbons

DATA ASSESSMENT

FIXED GASES (O_2, N_2, CO, CO_2, and Methane) ANALYSIS (by EPA Method TO-3C)

I. Holding Times

A. The 30 day analysis holding time requirement for air samples in summa-cannisters was met.

II. Surrogate Recovery

A. Surrogates were not required by the method.

III. Matrix Spike/Matrix Spike Duplicate (MS/MSD)

A The MS/MSD analysis was performed on sample GMP23001. The percent recoveries (%R) and relative percent differences (RPD) were within the QC limits.

B The DUP analysis was performed on sample GMP23001. The relative percent differences (RPD) were within the QC limits.

IV. Blank Spike or Laboratory Control Sample (LCS)

A. The LCS QC samples were analyzed as required under the TTEMI SOW. The percent recoveries (%R) and relative percent differences (RPD) were within the QC limits.

V. Blank Contamination

A. No fixed gases contaminants were found in the method blanks. No field blanks were identified in this SDG.

VI. Calibrations

A. Initial calibration of compounds was performed as required by the method. The percent relative standard deviations (%RSD) of calibration factors for compounds were less than or equal to 25.0% .

B. Calibration verification was performed at required frequencies. The percent differences (%D) of amounts in continuing standard mixtures were within the 25.0% QC limits.

VII. Field Duplicate

A. No field duplicate samples were identified in this SDG.

VIII. Other Qualifications

A. No results were reported below the RL.

Full Validation Criteria for Sample GMP22003*

IX. Compound Quantitation and Reported Detection Limits

A. Sample results were recalculated, with the proper dilution factors, weights, volumes, and percent moisture used to calculate the sample results. The samples were found to be correctly quantitated. The reported detection limits were consistent with Tetra Tech EMI's required report limits and reflect any dilutions, weights, volumes, and percent moisture.

X. System Performance

A. The samples were evaluated for baseline shifts, extraneous peaks, loss of resolution, and peak tailing. No system degradation was noted.

XI. Compound Identification

A. Target compound identification was considered to be correct for sample GMP22003*.

NON-METHANE HYDROCARBONS ANALYSIS (by EPA Method TO-25C)

I. Holding Times

A. The 30 day analysis holding time requirement for air samples in summa-cannisters was met.

II. Surrogate Recovery

A. Surrogates were not required by the method.

III. Matrix Spike/Matrix Spike Duplicate (MS/MSD)

A The MS/MSD analysis was performed on sample GMP23001. The percent recoveries (%R) and relative percent differences (RPD) were within the QC limits.

B The DUP analysis was performed on sample GMP23001. The relative percent differences (RPD) were within the QC limits.

IV. Blank Spike or Laboratory Control Sample (LCS)

A. The LCS QC samples were analyzed as required under the TTEMI SOW. The percent recoveries (%R) and relative percent differences (RPD) were within the QC limits.

V. Blank Contamination

A. No non-methane hydrocarbon or methane contaminants were found in the method blanks. No field blanks were identified in this SDG.

VI. Calibrations

A. Initial calibration of compounds was performed as required by the method. The percent relative standard deviations (%RSD) of calibration factors for compounds were less than or equal to 25.0% .

B. Calibration verification was performed at required frequencies. The percent differences (%D) of amounts in continuing standard mixtures were within the 25.0% QC limits.

VII. Field Duplicate

A. No field duplicate samples were identified in this SDG.

VIII. Other Qualifications

A. No results were reported below the RL.

Full Validation Criteria for Sample GMP22003*

IX. Compound Quantitation and Reported Detection Limits

A. Sample results were recalculated, with the proper dilution factors, weights, volumes, and percent moisture used to calculate the sample results. The samples were found to be correctly quantitated. The reported detection limits were consistent with Tetra Tech EMI's required report limits and reflect any dilutions, weights, volumes, and percent moisture.

X. System Performance

A. The samples were evaluated for baseline shifts, extraneous peaks, loss of resolution, and peak tailing. No system degradation was noted.

XI. Compound Identification

A. Target compound identification was considered to be correct for sample GMP22003*.

OVERALL ASSESSMENT OF DATA

I. Method Compliance and Additional Comments

A. All analyses were conducted within all specifications of the requested methods.

II. Usability

Fixed Gases Analysis

A. No results for fixed gases analysis were rejected in this SDG.

B. No samples were reextracted or reanalyzed for fixed gases analysis in this SDG.

Non-Methane Hydrocarbons Analysis

A. No results for non-methane hydrocarbons analysis were rejected in this SDG.

B. No samples were reextracted or reanalyzed for non-methane hydrocarbons analysis in this SDG.

III. The quality control criteria reviewed, other than those discussed above, were met and are considered acceptable. Based upon the full and cursory data validation, all other results are considered valid and usable for all purposes.

DATA VALIDATION REPORT

Site:	Hunters Point Shipyard, HPS, DO 003 Data Gaps Investigation
Contract Task Order (CTO) No.:	G9016.003.03.06.02.07.08
Laboratory:	Atmospheric Analysis & Consulting, Inc.
Data Reviewer:	Richard Amano, Stacey Mavrakos, and Pei Geng.
Firm/Proj. No:	Laboratory Data Consultants, Inc./9629B
Review Date:	January 8, 2003
Sample Delivery Group (SDG) No.:	HAN24

Sample Nos.:

EX10002*	EX6001DL	EX4001	EX2001	EX2001MS
EX10002DL*	EX5002	EX4001DL	EX1002	EX2001MSD
EX10003*	EX5002DL	EX3002	EX1002DL	EX2001DUP
EX10003DL*	GMP23001	EX3002DL	FB001	GMP22003DL
EX6001	GMP23001DL	GMP22003		

* Full Validation Sample

Matrix: Air

Collection Date(s): November 13, 2002

The data were qualified according to the U.S. Environmental Protection Agency (EPA) documents "USEPA Contract Laboratory Program National Functional Guidelines for Organic Data Review" (October 1999). In addition, the Tetra Tech EMI, Inc. documents "Data Validation Guidelines for CLP Organic Analyses," "Data Validation Guidelines for Non-CLP Organic Analyses" (March 1997), and the document entitled "PRC Comprehensive Long-term Environmental Action Navy II Analytical Services Statement of Work" (September 1998) were used along with other specified criteria in EPA methods. Data validation requirements are presented below.

I certify that all data validation criteria outlined in the above referenced documents were assessed, and any qualifications made to the data were in accordance with those documents.

Certified by Richard Amano
Principal Chemist

DATA VALIDATION REQUIREMENTS

Full validation includes all parameters listed below. Cursory validation parameters are indicated by an asterisk (*).

CLP Organic Parameters

*	Holding times
	GC/MS instrument performance check
*	Initial and continuing calibrations
*	Blanks
*	Surrogate recovery
*	Matrix spike/matrix spike duplicate
*	Laboratory control sample or blank spike
*	Field duplicates
*	Internal standard performance
	Target compound identification
	Tentatively identified compounds
	Compound quantitation
	Reported detection limits
	System performance
*	Overall assessment of data for the SDG

CLP Inorganic Parameters

*	Holding times
*	Initial and continuing calibrations
*	Blanks
*	Matrix spike
*	Laboratory control sample or blank spike
*	Field duplicates
*	Matrix duplicates
	ICP interference check sample
	GFAA quality control
*	ICP serial dilution
	Sample result verification
	Analyte quantitation
	Reported detection limits
*	Overall assessment of data for the SDG

Non-CLP Organic and Inorganic Parameters

*	Method compliance
*	Holding times
*	Initial and continuing calibrations
*	Blanks
*	Matrix spike/matrix spike duplicate
*	Laboratory control sample or blank spike
*	Field duplicates
*	Matrix duplicates
*	Surrogate recovery
	Analyte quantitation
	Reported detection limits
*	Overall assessment of data for the SDG

DATA VALIDATION QUALIFIERS AND CODES

Data Validation Qualifiers

UJ Estimated nondetected result

J Estimated detected result

R Rejected result

NJ Tentatively Identified Compound (TIC)

Data Validation Qualifier Codes

J1/UJ1/R3 System performance

J2/UJ2 Matrix Duplicate precision exceedance

J3/UJ3/R2 Accuracy exceedance in matrix spike, laboratory control sample (LCS), surrogate recovery

J4/UJ4 Serial dilution

J5/UJ5/R1 Holding time exceedance

J7/UJ7/R7 Initial and continuing Calibration exceedance

J8 Compound detected above calibration range

J9 Inorganics-ICP interference check sample / Organics - %D between columns

J0/UJ0/R0 Internal standard exceedance

U1 Method blank contamination

U2 Field blank contamination

U4 Common laboratory contamination

G, D, M, L, H, Z TPH qualifiers

Y Benzo(b)fluoranthene quantitated as the total of benzo(b) and benzo(k)fluoranthene

TABLE 1
SAMPLE CROSS REFERENCE TABLE
SAMPLE DELIVERY GROUP HAN24

Sample ID	Matrix	Date Collected	Quality Control ID	Validation Criteria*	Analyses												
					VOC (TO15)												
EX10002	Air	11/13/02		Full	X												
EX10003	Air	11/13/02	Field duplicate of EX10002	Full	X												
EX6001	Air	11/13/02			X												
EX5002	Air	11/13/02			X												
GMP23001	Air	11/13/02			X												
EX4001	Air	11/13/02			X												
EX3002	Air	11/13/02			X												
GMP22003	Air	11/13/02			X												
EX2001	Air	11/13/02	MS/MSD/DUP		X												
EX1002	Air	11/13/02			X												
FB001	Air	11/13/02	Field blank		X												

* = Cursory validation performed on all samples
** = MS/MSD/DUP performed on indicated parameters only
*** = Full review performed on indicated parameters only
VOC = Volatile Organic Compounds
MS/MSD = Matrix Spike/Matrix Spike Duplicate
DUP = Matrix duplicate

DATA ASSESSMENT

VOLATILE ORGANIC ANALYSIS (EPA Method TO-15)

I. Holding Times

A. The 30 day analysis holding time requirement for air samples in summa-cannisters was met.

II. Surrogate Recovery

A. The surrogate percent recoveries (%R) were within the QC limits with the exceptions listed below.

B. Due to surrogate recovery problems, the following detected results are qualified as estimated (J3).

- All volatile compounds in samples EX5002 EX4001 GMP22003 GMP23001 EX3002 EX1002

The surrogates outside of QC limits are listed below.

Sample ID	Surrogate	% R	QC Limits
EX5002	Bromofluorobenzene	181	60-130%
GMP23001	Bromofluorobenzene	312	60-130%
EX4001	Bromofluorobenzene	176	60-130%
EX3002	Bromofluorobenzene	155	60-130%
GMP22003	Bromofluorobenzene	318	60-130%
EX1002	Bromofluorobenzene	185	60-130%

High percent recoveries indicate that detected results may be biased high.

III. Matrix Spike/Matrix Spike Duplicate (MS/MSD)

A The MS/MSD analysis was performed on sample EX2001. The percent recoveries (%R) and relative percent differences (RPD) were within the QC limits.

B The DUP analysis was performed on sample EX2001. The relative percent differences (RPD) were within the QC limits.

IV. Blank Spike or Laboratory Control Sample (LCS)

A. The LCS QC samples were analyzed as required under the TTEMI SOW. The percent recoveries (%R) and relative percent differences (RPD) were within the QC limits.

V. Blank Contamination

A. Due to common laboratory contamination, the following results are considered nondetected (U4).

• Methylene chloride in samples	FB001	EX1002	EX1002DL
• Acetone in samples	EX10002DL*	EX10003DL*	EX2001
• 2-Butanone in samples	GMP23001DL	EX2001	

Acetone, Methylene chloride, and 2-Butanone are considered common laboratory contaminants when found at levels less than 5x the CRQL in environmental samples and not found in the associated blanks.

B. No volatile contaminants were found in the method blanks.

C. Due to field blank contamination, the following results are considered nondetected (U2).

• Propylene in samples	EX10002*	EX10003*		
• Chloromethane in samples	EX10002*	EX10003*	EX2001	EX1002
• Ethanol in samples	EX10002* EX10003DL* EX6001	EX5002 GMP23001 EX4001	GMP22003 EX2001	EX1002 GMP22003DL
• Acetone in sample	EX10003*			
• Toluene in sample	EX2001			

The following compounds were detected in the associated field blank at the concentrations noted below.

Field Blank ID	Compound	Concentration, ppbv/v
FB001	Propylene	0.94
FB001	Chloromethane	0.72
FB001	Ethanol	10
FB001	Acetone	6.9
FB001	Toluene	0.85

Detected results less than 5x the blank contamination were qualified.

VI. Calibrations

A. Initial calibration was performed using required standard concentrations. Percent relative standard deviations (%RSD) were less than or equal to 25.0% for all volatile compounds for all volatile compounds.

B. Continuing calibration was performed at the required frequencies as stated in the method. All of the continuing calibration percent differences (%D) between the initial calibration RRF and the continuing calibration RRF were less than or equal to 25.0% .

VII. Internal Standards

A. All internal standard area counts were within -50% to +100% of the associated calibration standard and retention times were ±30 seconds of the associated calibration standard retention time.

VIII. Field Duplicate

A. The following RPDs were obtained for the field duplicate samples EX10002* / EX10003*:

- 200% for Ethanol
- 200% for Methyl-tert-butyl-ether
- 200% for 1,3-Dichlorobenzene

The following RPDs were obtained for the field duplicate samples EX10002DL* / EX10003DL*:

- 200% for Propylene
- 59% for 1,2-Dichloro-1,1,2,2-tetrafluoroethane
- 55% for Ethanol
- 200% for Trichlorofluoromethane
- 200% for 1,1-Dichloroethene
- 91% for Hexane
- 56% for Benzene
- 200% for Heptane
- 200% for Styrene
- 110% for o-Xylene
- 158% for 4-Ethyltoluene
- 176% for 1,3,5-Trimethylbenzene
- 189% for 1,2,4-Trimethylbenzene
- 200% for Isopropyl alcohol
- 200% for Cyclohexane
- 200% for Trichloroethene
- 57% for Dichlorodifluoromethane

For air samples, the field RPD guideline is ± 50%. The data are not qualified on the basis of field duplicate results.

IX. Other Qualifications

A. The following results are qualified as estimated (J).

- All VOA detected results reported below the RL.

Detected results reported below the RL are considered to be qualitatively acceptable, but quantitatively unreliable due to the uncertainty in analytical precision near the limit of detection.

B. The following detected results are qualified as estimated (J8).

- Tetrahydrofuran in samples EX10002* EX10003* EX1002
- Propylene and Acetone in samples EX6001 GMP23001 GMP22003
- Propylene, Chloromethane, Acetone, Carbon disulfide, and Tetrahydrofuran in sample EX5002
- Propylene, Acetone, and Tetrahydrofuran in sample EX4001
- Propylene and Tetrahydrofuran in sample EX3002

The above listed sample results exceeded the calibration range.

Full Validation Criteria for Samples EX10002*, EX10002DL*, EX10003*, and EX10003DL*

X. GC/MS Instrument Performance Checks

A. The ion abundance criteria were met for the bromofluorobenzene (BFB) GC/MS instrument performance check. The samples were analyzed within 24 hours of the associated instrument performance check..

XI. Target Compound List (TCL) Identification

A. The relative retention times, mass spectra, and peak identifications of the samples were evaluated. Target compound identification was considered to be correct with the exceptions listed below.

B. The following detected result retention time (RT) were outside the QC limits as shown below.

Sample ID	Compound	QC Limits
EX10002*	Acetone and Ethanol	±0.06 of the Standard
EX10002DL*	Acetone and Ethanol	±0.06 of the Standard
EX10003*	Acetone	±0.06 of the Standard
EX10003DL*	Acetone, Ethanol, and Isopropyl alcohol	±0.06 of the Standard

XII. Compound Quantitation and Reported Detection Limits

A. Sample results were recalculated with the proper dilution factors, weights, volumes, and percent moisture used to calculate the sample results. The samples were found to be correctly quantitated. The reported detection limits were consistent with Tetra Tech EMI's required report limits and reflect any dilutions, weights, volumes, and percent moisture.

XIII. Tentatively Identified Compounds (TICs)

A. The TIC library searches were not performed for this SDG.

XIV. System Performance

A. The samples were evaluated for reconstructed ion chromatogram (RIC) baseline shifts, extraneous peaks, loss of resolution, and peak tailing. No system degradation was noted.

OVERALL ASSESSMENT OF DATA

I. Method Compliance and Additional Comments

A. All analyses were conducted within all specifications of the requested method with the exceptions listed below.

- The following RT was outside the QC limits for Acetone and Ethanol for samples EX10002* and EX10002DL*, for Acetone for sample EX1003*, and for Acetone, Ethanol, and Isopropyl alcohol for sample EX10003DL*.

II. Usability

Volatile Organic Analysis

A. No results for volatile analysis were rejected in this SDG.

B. Due to common laboratory and field blank contamination, surrogate, and compound quantitation problems in the volatile analysis, several samples were qualified as estimated. The findings were as follows:

- Due to common laboratory contamination problems, Methylene chloride and Acetone were qualified nondetect in three samples and 2-Butanone was qualified nondetect in two samples.
- Due to field blank contamination problems, Propylene was qualified nondetect in two samples, Chloromethane was qualified nondetect in four samples, Ethanol was qualified nondetect in ten samples, and Acetone and Toluene were qualified nondetect in one sample.
- Due to surrogate recovery problems, all volatile detected results were qualified as estimated in six samples.
- All detected results reported below the RL were qualified as estimated.
- Due to compound quantitation problems, Acetone detected results were qualified as estimated in five samples, Chloromethane and Carbon disulfide detected results were qualified as estimated in one sample, and Propylene and Tetrahydrofuran detected results were qualified as estimated in six samples.

C. Samples EX10002*, EX10003*, EX1002, EX6001, GMP23001, GMP22003, EX5002, EX4001, and EX3002 were diluted due to sample results exceeding the calibration range. For samples EX10002*, EX10003*, and EX1002, all volatile results except Tetrahydrofuran should be considered the most usable. The Tetrahydrofuran results for sample EX10002DL*, EX10003DL*, EX1002DL should be considered the most usable. For samples EX6001, GMP23001, and GMP22003, all volatile results except Propylene and Acetone should be considered the most usable. The Propylene and Acetone results for samples EX6001DL, GMP23001DL, and GMP22003DL should be considered the most usable. For sample EX5002, all volatile results except Propylene, Chloromethane, Acetone, Carbon disulfide, and Tetrahydrofuran should be considered the most usable. The Propylene, Chloromethane, Acetone, Carbon disulfide, and Tetrahydrofuran results for sample EX5002DL should be considered the most usable. For sample EX4001, all volatile results except Propylene, Acetone, and Tetrahydrofuran should be considered the most usable. The Propylene, Acetone, and Tetrahydrofuran results for sample EX4001DL should be considered the most usable. For sample EX3002, all volatile results except Propylene and Tetrahydrofuran should be considered the most usable. The Propylene and Tetrahydrofuran results for sample EX3002DL should be considered the most usable.

III. The quality control criteria reviewed, other than those discussed above, were met and are considered acceptable. Sample results that were found to be estimated (J) are usable for limited purposes only. Based upon the full data validation, all other results are considered valid and usable for all purposes.

DATA VALIDATION REPORT

Site:	Hunters Point Shipyard, HPS, DO 003 Data Gaps Investigation
Contract Task Order (CTO) No.:	G9016.003.03.06.02.07.08
Laboratory:	Atmospheric Analysis & Consulting, Inc.
Data Reviewer:	Richard Amano, Stacey Mavrakos, Erlinda Rauto, Felomina Tanguilig, and Pei Geng.
Firm/Proj. No:	Laboratory Data Consultants, Inc./9629C
Review Date:	January 9, 2003
Sample Delivery Group (SDG) No.:	HAN25

Sample Nos.:

SGCSSG004*	1R01MW16ASG004*	GMP08ASG001DL	GMPFB005DUP
SGLPSG003	GMP12SG005	GMP07ASG001	1R01MW16ASG004MS
GMPFB005	GMP12SG005DL	1R01MWI-5SG003	1R01MW16ASG004MSD
GMP04ASG001A	GMP01ASG001	1R01MWI-5SG003DL	1R01MW16ASG004DUP
GMP04ASG001ADL	GMP01ASG001DL	1R01MW18ASG003*	GMP02ASG002MS
GMP04ASG001B	GMP02ASG001	1R01MW18ASG003DL*	GMP02ASG002MSD
GMP04ASG002	GMP02ASG001DL	SGCSSG004MS	GMP02ASG002DUP
GMP24SG001	GMP02ASG002	SGCSSG004MSD	1R01MW18ASG003MS
GMP24SG001DL	GMP02ASG002DL	SGCSSG004DUP	1R01MW18ASG003MSD
GMP25SG001*	1R01MW366ASG005	GMPFB005MS	1R01MW18ASG003DLDUP
GMP25SG001DL*	GMP08ASG001	GMPFB005MSD	

* Full Validation Sample

Matrix: Air

Collection Date(s): November 13, 2002

The data were qualified according to the U.S. Environmental Protection Agency (EPA) documents "USEPA Contract Laboratory Program National Functional Guidelines for Organic Data Review" (October 1999). In addition, the Tetra Tech EMI, Inc. documents "Data Validation Guidelines for CLP Organic Analyses," "Data Validation Guidelines for Non-CLP Organic Analyses" (March 1997), and the document entitled “PRC Comprehensive Long-term Environmental Action Navy II Analytical Services Statement of Work” (September 1998) were used along with other specified criteria in EPA methods. Data validation requirements are presented below.

I certify that all data validation criteria outlined in the above referenced documents were assessed, and any qualifications made to the data were in accordance with those documents.

Certified by Richard Amano
Principal Chemist

DATA VALIDATION REQUIREMENTS

Full validation includes all parameters listed below. Cursory validation parameters are indicated by an asterisk (*).

CLP Organic Parameters

*	Holding times
	GC/MS instrument performance check
*	Initial and continuing calibrations
*	Blanks
*	Surrogate recovery
*	Matrix spike/matrix spike duplicate
*	Laboratory control sample or blank spike
*	Field duplicates
*	Internal standard performance
	Target compound identification
	Tentatively identified compounds
	Compound quantitation
	Reported detection limits
	System performance
*	Overall assessment of data for the SDG

CLP Inorganic Parameters

*	Holding times
*	Initial and continuing calibrations
*	Blanks
*	Matrix spike
*	Laboratory control sample or blank spike
*	Field duplicates
*	Matrix duplicates
	ICP interference check sample
	GFAA quality control
*	ICP serial dilution
	Sample result verification
	Analyte quantitation
	Reported detection limits
*	Overall assessment of data for the SDG

Non-CLP Organic and Inorganic Parameters

*	Method compliance
*	Holding times
*	Initial and continuing calibrations
*	Blanks
*	Matrix spike/matrix spike duplicate
*	Laboratory control sample or blank spike
*	Field duplicates
*	Matrix duplicates
*	Surrogate recovery
	Analyte quantitation
	Reported detection limits
*	Overall assessment of data for the SDG

DATA VALIDATION QUALIFIERS AND CODES

Data Validation Qualifiers

UJ Estimated nondetected result

J Estimated detected result

R Rejected result

NJ Tentatively Identified Compound (TIC)

Data Validation Qualifier Codes

J1/R3 System performance

J2 Duplicate precision exceedance

J3/R2 Matrix spike, laboratory control sample (LCS), surrogate recovery exceedance

J4 Serial dilution

J5/R1 Holding time exceedance

J7/R7 Calibration exceedance

J8 Compound above calibration range

J9 ICP interference check sample

J0 Internal standard exceedance

U1 Laboratory blank contamination

U2 Field blank contamination

U4 Common laboratory contamination

G, D, M, L, H, Z TPH qualifiers

TABLE 1
SAMPLE CROSS REFERENCE TABLE
SAMPLE DELIVERY GROUP HAN25

Sample ID	Matrix	Date Collected	Quality Control ID	Validation Criteria*	Analyses												
					VOC (TO15)	TO-3C	TO-25C										
SGCSSG004	Air	11/13/02	MS/MSD/DUP	Full	X	X	X										
SGLPSG003	Air	11/13/02			X	X	X										
GMPFB005	Air	11/13/02	MS/MSD/DUP**, Field blank		X	X**	X										
GMP04ASG001A	Air	11/13/02			X	X	X										
GMP04ASG001B	Air	11/13/02			X	X	X										
GMP04ASG002	Air	11/13/02	Field duplicate of GMP04ASG001A & B		X	X	X										
GMP24SG001	Air	11/13/02			X	X	X										
GMP25SG001	Air	11/13/02		Full	X	X	X										
1R01MW16ASG004	Air	11/13/02	MS/MSD/DUP**	Full	X	X	X**										
GMP12SG005	Air	11/13/02			X	X	X										
GMP01ASG001	Air	11/13/02			X	X	X										
GMP02ASG001	Air	11/13/02			X	X	X										
GMP02ASG002	Air	11/13/02	MS/MSD/DUP**, Field duplicate of GMP02ASG001		X	X**	X										
1R01MW366ASG005	Air	11/13/02			X	X	X										
GMP08ASG001	Air	11/13/02			X	X	X										
GMP07ASG001	Air	11/13/02			X	X	X										
1R01MWI-5SG003	Air	11/13/02			X	X	X										
1R01MW18ASG003	Air	11/13/02	MS/MSD/DUP**	Full	X**	X	X										

* = Cursory validation performed on all samples
** = MS/MSD/DUP performed on indicated parameters only
DUP = Matrix duplicate
*** = Full review performed on indicated parameters only
VOC = Volatile Organic Compounds
MS/MSD = Matrix Spike/Matrix Spike Duplicate
HC = Hydrocarbons

DATA ASSESSMENT

VOLATILE ORGANIC ANALYSIS (EPA Method TO-15)

I. Holding Times

A. The 30 day analysis holding time requirement for air samples in summa-cannisters was met.

II. Surrogate Recovery

A. The surrogate percent recoveries (%R) were within the QC limits with the exceptions listed below.

B. Due to surrogate recovery problems, the following detected results are qualified as estimated (J3).

• All volatile compounds in samples	GMP24SG001	GMP01ASG001	GMP08ASG001
	GMP25SG001*	GMP02ASG001	1R01MWI-5SG003
	GMP12SG005	GMP02ASG002	1R01MW18ASG003*

The surrogates outside of QC limits are listed below.

Sample ID	Surrogate	% R	QC Limits
GMP24SG001	Bromofluorobenzene	289	60-130%
GMP25SG001*	Bromofluorobenzene	207	60-130%
GMP12SG005	Bromofluorobenzene	308	60-130%
GMP01ASG001	Bromofluorobenzene	146	60-130%
GMP02ASG001	Bromofluorobenzene	202	60-130%
GMP02ASG002	Bromofluorobenzene	202	60-130%
GMP08ASG001	Bromofluorobenzene	187	60-130%
1R01MWI-5SG003	Bromofluorobenzene	136	60-130%
1R01MW18ASG003*	Bromofluorobenzene	171	60-130%

High percent recoveries indicate that detected results may be biased high.

III. Matrix Spike/Matrix Spike Duplicate (MS/MSD)

A The MS/MSD analysis was performed on samples SGCSSG004* and 1R01MW18ASG003*. The percent recoveries (%R) and relative percent differences (RPD) were within the QC limits.

B The DUP analysis was performed on samples SGCSSG004* and 1R01MW18ASG003DL*. The relative percent differences (RPD) were within the QC limits.

IV. Blank Spike or Laboratory Control Sample (LCS)

A. The LCS QC samples were analyzed as required under the TTEMI SOW. The percent recoveries (%R) and relative percent differences (RPD) were within the QC limits.

V. Blank Contamination

A. Due to common laboratory contamination, the following results are considered nondetected (U4).

• Methylene chloride in samples	SGCSSG004* SGLPSG003 GMPFB005 GMP04ASG001A GMP04ASG001B GMP04ASG002 GMP24SG001 GMP25SG001* GMP25SG001DL*	1R01MW16ASG004* GMP12SG005 GMP12SG005DL GMP01ASG001 GMP01ASG001DL GMP02ASG001 GMP02ASG001DL GMP02ASG002 GMP02ASG002DL	1R01MW366ASG005 GMP08ASG001 GMP08ASG001DL GMP07ASG001 1R01MWI-5SG003 1R01MWI-5SG003DL 1R01MW18ASG003* 1R01MW18ASG003DL*
• Acetone in samples	SGLPSG003	GMPFB005	1R01MW366ASG005

Acetone, Methylene chloride, and 2-Butanone are considered common laboratory contaminants when found at levels less than 5x the CRQL in environmental samples and not found in the associated blanks.

B. No volatile contaminants were found in the method blanks.

C. Due to field blank contamination, the following results are considered nondetected (U2).

• Propylene in samples	SGCSSG004*	SGLPSG003	GMP08ASG001
• Dichlorodifluoromethane in samples	SGCSSG004* GMP25SG001DL*	SGLPSG003	GMP08ASG001
• Chloromethane in samples	SGCSSG004* SGLPSG003 GMP04ASG001A	GMP04ASG001B 1R01MW16ASG004*	GMP12SG005 1R01MW366ASG005
• Ethanol in samples	SGCSSG004* GMP04ASG001B	GMP24SG001	GMP25SG001*
• Carbon disulfide in samples	SGCSSG004* GMP04ASG001B 1R01MW18ASG003*	GMP04ASG002 GMP12SG005	GMP01ASG001 GMP08ASG001
• Toluene in samples	SGCSSG004* GMP04ASG001A GMP04ASG001B GMP04ASG002	GMP25SG001* GMP12SG005 GMP02ASG001 GMP02ASG002	GMP02ASG002DL 1R01MW366ASG005 GMP08ASG001 GMP07ASG001

The following compounds were detected in the associated field, trip, and equipment rinsate blanks at the concentrations noted below.

Field Blank ID	Compound	Concentration, ppbv/v
GMPFB005	Propylene	0.78

Field Blank ID	Compound	Concentration, ppbv/v
GMPFB005	Dichlorodifluoromethane	1.1
GMPFB005	Chloromethane	1.2
GMPFB005	Ethanol	34
GMPFB005	Carbon disulfide	0.72
GMPFB005	Toluene	0.68

Detected results less than 5x the blank contamination were qualified.

VI. Calibrations

A. Initial calibration was performed using required standard concentrations. Percent relative standard deviations (%RSD) were less than or equal to 25.0% for all volatile compounds for all volatile compounds.

B. Continuing calibration was performed at the required frequencies as stated in the method. All of the continuing calibration percent differences (%D) between the initial calibration RRF and the continuing calibration RRF were less than or equal to 25.0% .

VII. Internal Standards

A. All internal standard area counts were within -50% to +100% of the associated calibration standard and retention times were ±30 seconds of the associated calibration standard retention time.

VIII. Field Duplicate

A. The following RPDs were obtained for the field duplicate samples GMP04ASG001A / GMP04ASG002:

- 200% for Chloromethane
- 200% for Ethanol
- 200% for Isopropyl alcohol
- 136% for Carbon disulfide
- 200% for 1,2,4-Trimethylbenzene

The following RPDs were obtained for the field duplicate samples GMP04ASG001ADL / GMP04ASG002:

- 200% for Ethanol
- 200% for Acetone
- 199% for Methylene chloride
- 197% for Carbon disulfide
- 196% for Hexane
- 199% for Toluene
- 188% for m,p-Xylenes
- 192% for o-Xylene
- 200% for 1,3,5-Trimethylbenzene
- 200% for 1,2,4-Trimethylbenzene

- 200% for 1,1,2-Trichloro-1,2,2-trifluoroethane
- 200% for Trichlorofluoromethane
- 200% for 1,1-Dichloroethene
- 200% for Benzene
- 200% for Cyclohexane
- 200% for Trichloroethene
- 200% for Heptane
- 200% for Tetrachloroethene
- 200% for Ethylbenzene

The following RPDs were obtained for the field duplicate samples GMP04ASG002 / GMP04ASG001B:

- 200% for Chloromethane
- 200% for Chloroethane
- 200% for Ethanol
- 200% for 1,2,4-Trimethylbenzene

The following RPDs were obtained for the field duplicate samples GMP02ASG001 / GMP02ASG002:

- 200% for 1,1,2,2-Tetrachloroethane
- 200% for cis-1,2-Dichloroethene
- 200% for 4-Ethyltoluene
- 100% for Methylene chloride

The following RPDs were obtained for the field duplicate samples GMP02ASG001DL / GMP02ASG002DL:

- 200% for Benzene
- 200% for Toluene

For air samples, the field RPD guideline is ± 50%. The data are not qualified on the basis of field duplicate results.

IX. Other Qualifications

A. The following results are qualified as estimated (J).

- All VOA detected results reported below the RL.

Detected results reported below the RL are considered to be qualitatively acceptable, but quantitatively unreliable due to the uncertainty in analytical precision near the limit of detection.

B. The following detected results are qualified as estimated (J8).

• Ethanol in sample	GMP04ASG001A
• Propylene and Acetone in sample	GMP24SG001
• Cyclohexane in sample	1R01MW16ASG004*

• Propylene in samples	GMP02ASG001	GMP02ASG002
• Propylene, Hexane, and Heptane in samples	1R01MWI-5SG003	1R01MW18ASG003*

The above listed sample results exceeded the calibration range.

Full Validation Criteria for Samples SGCSSG004*, GMP25SG001*, GMP25SG001DL*, 1R01MW16ASG004*, 1R01MW18ASG003*, and 1R01MW18ASG003DL*

X. GC/MS Instrument Performance Checks

A. The ion abundance criteria were met for the bromofluorobenzene (BFB) GC/MS instrument performance check. The samples were analyzed within 12 hours of the associated instrument performance check.

XI. Target Compound List (TCL) Identification

A. The relative retention times, mass spectra, and peak identifications of the samples were evaluated. Target compound identification was considered to be correct with the exceptions listed below.

B. The following detected result retention time (RT) were outside the QC limits as shown below.

Sample ID	Compound	QC Limits
SGCSSG004*	Acetone and Ethanol	±0.06 of the Standard

XII. Compound Quantitation and Reported Detection Limits

A. Sample results were recalculated with the proper dilution factors, weights, volumes, and percent moisture used to calculate the sample results. The samples were found to be correctly quantitated. The reported detection limits were consistent with Tetra Tech EMI's required report limits and reflect any dilutions, weights, volumes, and percent moisture.

XIII. Tentatively Identified Compounds (TICs)

A. The TIC library searches were not performed for this SDG.

XIV. System Performance

A. The samples were evaluated for reconstructed ion chromatogram (RIC) baseline shifts, extraneous peaks, loss of resolution, and peak tailing. No system degradation was noted.

FIXED GASES (O_2, N_2, CO, CO_2, and Methane) ANALYSIS (by EPA Method TO-3C)

I. Holding Times

A. The 30 day analysis holding time requirement for air samples in summa-cannisters was met.

II. Surrogate Recovery

A. Surrogates were not required by the method.

III. Matrix Spike/Matrix Spike Duplicate (MS/MSD)

A The MS/MSD analysis was performed on samples GMPFB005, GMP02ASG002, and GMP23001. The percent recoveries (%R) and relative percent differences (RPD) were within the QC limits.

B The DUP analysis was performed on samples SGCSSG004, GMPFB005, GMP02ASG002, and GMP23001. The relative percent differences (RPD) were within the QC limits.

IV. Blank Spike or Laboratory Control Sample (LCS)

A. The LCS QC samples were analyzed as required under the TTEMI SOW. The percent recoveries (%R) and relative percent differences (RPD) were within the QC limits.

V. Blank Contamination

A. No results were qualified based on the method blank contamination.

B. Due to field blank contamination, the following results are considered nondetected (U2).

- Oxygen in samples

SGCSSG004*	GMP25SG001*	1R01MW366ASG005
SGLPSG003	1R01MW16ASG004*	GMP08ASG001
GMP04ASG001A	GMP12SG005	GMP07ASG001
GMP04ASG001B	GMP01ASG001	1R01MWI-5SG003
GMP04ASG002	GMP02ASG001	1R01MW18ASG003*
GMP24SG001	GMP02ASG002	

The following compounds were detected in the associated field blank at the concentrations noted below.

Field Blank ID	Compound	Concentration
GMPFB005	Oxygen	18%

Detected results less than 5x the blank contamination were qualified.

VI. Calibrations

A. Initial calibration of compounds was performed as required by the method. The percent relative standard deviations (%RSD) of calibration factors for compounds were less than or equal to 25.0% .

B. Calibration verification was performed at required frequencies. The percent differences (%D) of amounts in continuing standard mixtures were within the 25.0% QC limits.

VII. Field Duplicate

A. No RPDs above 50% were obtained for the field duplicate samples GMP04ASG001A / GMP04ASG002, GMP04ASG002 / GMP04ASG001B, and GMP02ASG001 / GMP02ASG002.

VIII. Other Qualifications

A. No results were reported below the RL.

Full Validation Criteria for Samples SGCSSG004*, GMP25SG001*, 1R01MW16ASG004*, and 1R01MW18ASG003*

IX. Compound Quantitation and Reported Detection Limits

A. Sample results were recalculated, with the proper dilution factors, weights, volumes, and percent moisture used to calculate the sample results. The samples were found to be correctly quantitated. The reported detection limits were consistent with Tetra Tech EMI's required report limits and reflect any dilutions, weights, volumes, and percent moisture.

X. System Performance

A. The samples were evaluated for baseline shifts, extraneous peaks, loss of resolution, and peak tailing. No system degradation was noted.

XI. Compound Identification

A. Target compound identification was considered to be correct for samples SGCSSG004*, GMP25SG001*, 1R01MW16ASG004*, and 1R01MW18ASG003*.

NON-METHANE HYDROCARBONS (TNMHC) and METHANE ANALYSIS
(by EPA Method TO-25C)

I. Holding Times

A. The 30 day analysis holding time requirement for air samples in summa-cannisters was met.

II. Surrogate Recovery

A. Surrogates were not required by the method.

III. Matrix Spike/Matrix Spike Duplicate (MS/MSD)

A The MS/MSD analysis was performed on samples 1R01MW16ASG004 and GMP23001. The percent recoveries (%R) and relative percent differences (RPD) were within the QC limits.

B The DUP analysis was performed on samples SGCSSG004, 1R01MW16ASG004, and GMP23001. The relative percent differences (RPD) were within the QC limits.

IV. Blank Spike or Laboratory Control Sample (LCS)

A. The LCS QC samples were analyzed as required under the TTEMI SOW. The percent recoveries (%R) and relative percent differences (RPD) were within the QC limits.

V. Blank Contamination

A. No non-methane hydrocarbon or methane contaminants were found in the method blanks.

B. Due to field blank contamination, the following results are considered nondetected (U2).

- Methane in sample SGLPSG003

The following compounds were detected in the associated field blank at the concentrations noted below.

Field Blank ID	Compound	Concentration
GMPFB005	Methane	1.5 ppmv

Detected results less than 5x the blank contamination were qualified.

VI. Calibrations

A. Initial calibration of compounds was performed as required by the method. The percent relative standard deviations (%RSD) of calibration factors for compounds were less than or equal to 25.0% .

B. Calibration verification was performed at required frequencies. The percent differences (%D) of amounts in continuing standard mixtures were within the 25.0% QC limits.

VII. Field Duplicate

A. The following RPDs were obtained for the field duplicate samples GMP04ASG001A / GMP04ASG002:

- 109% for TNMHC

The following RPDs were obtained for the field duplicate samples GMP04ASG001B / GMP04ASG002:

- 107% for TNMHC

No RPDs above 50% were obtained for the field duplicate samples GMP02ASG001 / GMP02ASG002:

For air samples, the field RPD guideline is ± 50%. The data are not qualified on the basis of field duplicate results.

VIII. Other Qualifications

A. No results were reported below the RL.

Full Validation Criteria for Samples SGCSSG004*, GMP25SG001*, 1R01MW18SG003*, and IR01MW16ASG004*

IX. Compound Quantitation and Reported Detection Limits

A. Sample results were recalculated, with the proper dilution factors, weights, volumes, and percent moisture used to calculate the sample results. The samples were found to be correctly quantitated. The reported detection limits were consistent with Tetra Tech EMI's required report limits and reflect any dilutions, weights, volumes, and percent moisture.

X. System Performance

A. The samples were evaluated for baseline shifts, extraneous peaks, loss of resolution, and peak tailing. No system degradation was noted.

XI. Compound Identification

A. Target compound identification was considered to be correct for samples SGCSSG004*, GMP25SG001*, 1R01MW18SG003*, and IR01MW16ASG004*.

OVERALL ASSESSMENT OF DATA

I. Method Compliance and Additional Comments

A. All analyses were conducted within all specifications of the requested method with the exceptions listed below.

- For the volatile analysis, the following RT was outside the QC limits for Acetone and Ethanol for sample SGCSSG004*.

II. Usability

Volatile Organic Analysis

A. No results for volatile analysis were rejected in this SDG.

B. Due to common laboratory and field blank contamination, surrogate, and compound quantitation problems in the volatile analysis, several samples were qualified as estimated. The findings were as follows:

- Due to common laboratory contamination problems, Methylene chloride was qualified nondetect in twenty-six samples and Acetone was qualified nondetect in three samples.

- Due to field blank contamination problems, Propylene was qualified nondetect in three samples, Dichlorodifluoromethane and Ethanol were qualified nondetect in four samples, Chloromethane was qualified nondetect in seven samples, Carbon disulfide was qualified nondetect in seven samples, and Toluene was qualified nondetect in twelve samples.

- Due to surrogate recovery problems, all volatile detected results were qualified as estimated in nine samples.

- All detected results reported below the RL were qualified as estimated.

- Due to compound quantitation problems, Ethanol, Acetone, and Cyclohexane detected results were qualified as estimated in one sample, Propylene detected results were qualified as estimated in five samples, and Hexane and Heptane detected results were qualified as estimated in two samples.

C. Samples GMP04ASG001A, GMP24SG001, GMP25SG001*, GMP12SG005, GMP01ASG001, GMP02ASG001, GMP02ASG002, GMP08ASG001, 1R01MWI-5SG003, and 1R01MW18ASG003* were diluted due to sample results exceeding the calibration range. For sample GMP04ASG001A, all volatile results except Ethanol should be considered the most usable. The Ethanol results for sample GMP04ASG001ADL should be considered the most usable. For sample GMP24SG001, all volatile results except Propylene and Acetone should be considered the most usable. The Propylene and Acetone results for sample GMP24SG001DL should be considered the most usable. For samples GMP02ASG001 and GMP02ASG002, all volatile results except Propylene should be considered the most usable. The Propylene results for samples GMP02ASG001DL and GMP02ASG002DL should be considered the most usable. For samples 1R01MWI-5SG003 and 1R01MW18ASG003*, all volatile results except Propylene, Hexane, and Heptane should be considered the most usable. The Propylene, Hexane, and Heptane results for samples 1R01MWI-5SG003DL and 1R01MW18ASG003DL* should be considered the most usable. For samples GMP25SG001*, GMP12SG005, GMP01ASG001, and GMP08ASG001 all volatile results should be considered the most usable. The volatile results for samples GMP25SG001DL*, GMP12SG005DL, GMP01ASG001DL, and GMP08ASG001DL should not be considered usable.

Fixed Gases Analysis

A. No results for fixed gases analysis were rejected in this SDG.

B. Due to field blank contamination problems in the fixed gases analysis, several samples were qualified as estimated. The findings were as follows:

- Due to field blank contamination problems, Oxygen was qualified nondetect in seventeen samples.

C. No samples were reextracted or reanalyzed for fixed gases analysis in this SDG.

Non-Methane Hydrocarbons and Methane Analysis

A. No results for non-methane hydrocarbons and methane analysis were rejected in this SDG.

B. Due to field blank contamination problems in the non-methane hydrocarbons and methane analysis, several samples were qualified as estimated. The findings were as follows:

- Due to field blank contamination problems, Methane was qualified nondetect in one sample.

C. No samples were reextracted or reanalyzed for non-methane hydrocarbons and methane analysis in this SDG.

III. The quality control criteria reviewed, other than those discussed above, were met and are considered acceptable. Sample results that were found to be estimated (J) are usable for limited purposes only. Based upon the full and cursory data validation, all other results are considered valid and usable for all purposes.

Tetra Tech EM Inc.
DATA VALIDATION REPORT

Site:	Hunters Point Shipyard Parcel E Landfill Gas
Delivery Order (DO) No.:	003
Laboratory:	Atmospheric Analysis & Consulting, Inc.
Data Reviewer:	Dina David-Bailey, 3J Environmental Services
Review Date:	May 15, 2002

Sample Delivery Group (SDG) No.: HAN01

Sample Nos.: SG11SG001*
SG12SG001*
SGFBSG001

* Full Validation Sample

Matrix: Air

Collection Date(s): March 25, 2002

The data were qualified according to the U.S. Environmental Protection Agency (EPA) document "USEPA Contract Laboratory Program National Functional Guidelines for Organic Data Review" (October 1999). In addition, the TtEMI document "Data Validation Guidelines for Non-CLP Organic Analyses" was used along with other specified criteria in the EPA methods and the Hunters Point Shipyard Parcel E Nonstandard Data Gaps Investigation Analytical Services Statement of Work (March 2002). Data validation requirements are presented below.

I certify that all data validation criteria outlined in the above referenced documents were assessed, and any qualifications made to the data were in accordance with those documents.

Certified by

DATA VALIDATION REQUIREMENTS

Full validation includes all parameters listed below. An asterisk (*) indicates cursory validation parameters.

Non-CLP Organic Parameters

*	Method compliance
*	Holding times
*	Initial and continuing calibrations
*	Blanks
*	Matrix spike/matrix spike duplicate
*	Laboratory control sample or blank spike
*	Field duplicates
*	Matrix duplicates
*	Surrogate recovery
*	Internal standard performance
	Target compound identification
	Analyte quantitation
	Reported detection limits
*	Overall assessment of data for the SDG

DATA VALIDATION QUALIFIERS AND CODES

Data Validation Qualifiers

U	Nondetected result
J	Estimated result
R	Rejected result

Data Validation Qualifier Codes

U2	Qualified due to field blank
U4	Qualified because it's a common laboratory contaminant
J8	Exceeds calibration range
J	Quantification below reporting limit

TABLE 1
CURSORY DATA VALIDATION SUMMARY

Analysis{PRIVATE }	Holding Times	Surrogates	MS/MSD	Matrix Duplicates	LCS	Blanks	Calibrations	Internal Standards	Field Duplicates	Other
VOA (TO-15)	✓	✓	✓	✓	✓	pg. 6	✓	✓	N/A	pg. 6
Landfill Gas (EPA 3C)	✓	N/A	✓	✓	✓	✓	✓	N/A	N/A	pg. 8
Landfill Gas (EPA 25C)	✓	N/A	✓	✓	✓	✓	✓	N/A	N/A	✓

Notes:
✓ indicates that all quality control criteria were met for the parameter as specified in the prescribed methods and data validation guidelines.
N/A indicates the parameter is not applicable to an analysis.
If criteria were not met and the data were qualified, a page number is indicated where the qualification is detailed.
The data were evaluated for all validation criteria and were found to be in control except where noted. Any outliers are described in the text.

TABLE 2
FULL DATA VALIDATION SUMMARY
Samples SG11SG001 (EPA 3C/25C) and SG12SG001 (TO-15)

Analysis{PRIVATE }	GC/MS Tuning	Target Compound List Identification	Compound or Analyte Quantification	Reported Detection Limits	Tentatively Identified Compounds	System Performance	Interference Check Sample	Graphite Furnace Quality Control
VOA (TO-15)	✓	✓	✓	✓	N/A	✓	N/A	N/A
Landfill Gas (EPA 3C)	N/A	N/A	✓	✓	N/A	✓	N/A	N/A
Landfill Gas (EPA 25C)	N/A	N/A	✓	✓	N/A	✓	N/A	N/A

Notes:
✓ indicates that all quality control criteria were met for the parameter as specified in the prescribed methods and data validation guidelines.
N/A indicates the parameter is not applicable to an analysis.
If criteria were not met and the data were qualified, a page number is indicated where the qualification is detailed.
The data were evaluated for all validation criteria and were found to be in control except where noted. Any outliers found are described below.

DATA ASSESSMENT

VOLATILE ORGANIC ANALYSIS

I. Blank Contamination

A. Due to common laboratory contamination, the following results are considered nondetected (U4).

- Acetone, methylene chloride, and 2-butanone in samples SG11SG001, SG12SG001, and SGFBSG001

Acetone, methylene chloride, and 2-butanone are considered common laboratory contaminants when found at levels less than 10x the reporting limit (RL) in the samples.

B. Due to field blank contamination, the following results are considered nondetected (U2).

- 1,2,4-Trimethylbenzene and chloromethane in sample SG12SG001
- Dichlorodifluoromethane in samples SG11SG001 and SG12SG001
- Toluene in sample SG11SG001

The following compounds were detected in the associated field blank at the concentrations noted below.

Compound	Blank ID	Concentration, ppbv
1,2,4-Trimethylbenzene	SGFBSG001	1.4
Chloromethane	SGFBSG001	0.78
Dichlorodifluoromethane	SGFBSG001	0.83
Toluene	SGFBSG001	1.1

Detected results less than 5x the blank contamination were qualified.

II. Other Qualifications

A. The following detected results are qualified as estimated (J).

- All VOA detected results below the RL

Detected results reported below the RL are considered to be qualitatively acceptable, but quantitatively unreliable due to the uncertainty in analytical precision near the limit of detection.

Full Validation Criteria for Sample SG12SG001

III. GC/MS Tuning

A. The ion abundance criteria were met for the bromofluorobenzene (BFB) GC/MS performance checks. The sample was analyzed within 12 hours of the associated performance check.

IV. Target Compound List (TCL) Identification

A. The relative retention times, mass spectra, and peak identifications of the sample were evaluated. Target compound identification was considered to be correct.

V. Compound Quantitation and Reported Detection Limits

A. Sample results were recalculated, with the proper dilution factors used to calculate the sample results. The target analytes in the sample were correctly quantitated. The reported detection limits were consistent with the contract required reporting limits and reflect any dilutions performed.

VI. System Performance

A. The samples were evaluated for reconstructed ion chromatogram (RIC) baseline shifts, extraneous peaks, loss of resolution, and peak tailing. Except for slightly elevated baseline observed for some samples, no other system degradation was noted.

LANDFILL GAS (EPA 3C) ANALYSIS

I. Other Qualifications

A. The following detected result is qualified as estimated (J8).

- Oxygen in field blank sample SGFBSG001

The result reported for oxygen in field blank sample SGFBSG001 exceeds the instrument calibration range. The result is considered quantitatively uncertain. No further sample dilution was performed on field blank sample SGFBSG001.

Full Validation Criteria for Sample SG11SG001

II. Analyte Quantitation and Reported Detection Limits

A. Sample results were recalculated, with the proper dilution factors used to calculate the sample results. The target analytes in the sample were correctly quantitated. The reported detection limits were consistent with the contract required reporting limit and reflect any dilutions performed.

LANDFILL GAS (EPA 25C) ANALYSIS

Full Validation Criteria for Sample SG11SG001

I. Analyte Quantitation and Reported Detection Limits

A. Sample results were recalculated, with the proper dilution factors used to calculate the sample results. The target analytes in the sample were correctly quantitated. The reported detection limits were consistent with the contract required reporting limit and reflect any dilutions performed.

OVERALL ASSESSMENT OF DATA

I. Method Compliance and Additional Comments

A. For all of the analyses, the standard certificates and preparations were not provided for review. Additionally, the laboratory stated (via telephone communication) that the standards used for the instrument calibration and QC samples came from the same manufacturer because of the commercial unavailability of a second source standard. The effect of this deficiency on data quality is not known.

II. Usability

A. Due to contamination and quantitation problems, several results for VOA and one result for oxygen were qualified. Several VOA results were qualified as nondetected due to common and field blank contamination. One result for oxygen was estimated due to a quantitation problem.

B. Sample SG12SG001 was reanalyzed at a higher dilution due to high 1,1,1-trichloroethane and tetrachloroethylene concentrations exceeding the instrument calibration range in the initial analysis. The original analysis should be used as the final validated results for all of the VOA analytes except for 1,1,1-trichloroethane and tetrachloroethylene.

C. The quality control criteria reviewed, other than those discussed above, were met and are considered acceptable. No data were rejected. Estimated sample results (J) are usable only for limited purposes. Based upon the cursory and full data validation, all other results are considered valid and usable for all purposes. In general, the absence of rejected data and the small number of qualifiers added to the data indicate high usability.

Tetra Tech EM Inc.
DATA VALIDATION REPORT

Site:	Hunters Point Shipyard Parcel E Landfill Gas
Delivery Order (DO) No.:	003
Laboratory:	Atmospheric Analysis & Consulting, Inc.
Data Reviewer:	Dina David-Bailey, 3J Environmental Services
Review Date:	May 16, 2002

Sample Delivery Group (SDG) No.: HAN02

Sample Nos.: SG06SG001
SG07SG001*
SG08SG001*
SG15SG001
SGFBSG002

* Full Validation Sample

Matrix: Air

Collection Date(s): March 26, 2002

The data were qualified according to the U.S. Environmental Protection Agency (EPA) document "USEPA Contract Laboratory Program National Functional Guidelines for Organic Data Review" (October 1999). In addition, the TtEMI document "Data Validation Guidelines for Non-CLP Organic Analyses" was used along with other specified criteria in the EPA methods and the Hunters Point Shipyard Parcel E Nonstandard Data Gaps Investigation Analytical Services Statement of Work (March 2002). Data validation requirements are presented below.

I certify that all data validation criteria outlined in the above referenced documents were assessed, and any qualifications made to the data were in accordance with those documents.

Certified by

DATA VALIDATION REQUIREMENTS

Full validation includes all parameters listed below. An asterisk (*) indicates cursory validation parameters.

Non-CLP Organic Parameters

*	Method compliance
*	Holding times
*	Initial and continuing calibrations
*	Blanks
*	Matrix spike/matrix spike duplicate
*	Laboratory control sample or blank spike
*	Field duplicates
*	Matrix duplicates
*	Surrogate recovery
*	Internal standard performance
	Target compound identification
	Analyte quantitation
	Reported detection limits
*	Overall assessment of data for the SDG

DATA VALIDATION QUALIFIERS AND CODES

Data Validation Qualifiers

U	Nondetected result
J	Estimated result
R	Rejected result

Data Validation Qualifier Codes

U2	Qualified due to field blank
U4	Qualified because it's a common laboratory contaminant
J8	Exceeds calibration range
J	Quantification below reporting limit

TABLE 1
CURSORY DATA VALIDATION SUMMARY

Analysis{PRIVATE }	Holding Times	Surrogates	MS/MSD	Matrix Duplicates	LCS	Blanks	Calibrations	Internal Standards	Field Duplicates	Other
VOA (TO-15)	✓	✓	✓	✓	✓	pg. 6	✓	✓	N/A	pg. 6
Landfill Gas (EPA 3C)	✓	N/A	✓	✓	✓	✓	✓	N/A	N/A	pg. 8
Landfill Gas (EPA 25C)	✓	N/A	✓	✓	✓	pg. 9	✓	N/A	N/A	✓

Notes:
✓ indicates that all quality control criteria were met for the parameter as specified in the prescribed methods and data validation guidelines.
N/A indicates the parameter is not applicable to an analysis.
If criteria were not met and the data were qualified, a page number is indicated where the qualification is detailed.
The data were evaluated for all validation criteria and were found to be in control except where noted. Any outliers are described in the text.

TABLE 2
FULL DATA VALIDATION SUMMARY
Samples SG07SG001 (EPA 3C/25C) and SG08SG001 (TO-15)

Analysis{PRIVATE }	GC/MS Tuning	Target Compound List Identification	Compound or Analyte Quantification	Reported Detection Limits	Tentatively Identified Compounds	System Performance	Interference Check Sample	Graphite Furnace Quality Control
VOA (TO-15)	✓	✓	✓	✓	N/A	✓	N/A	N/A
Landfill Gas (EPA 3C)	N/A	N/A	✓	✓	N/A	✓	N/A	N/A
Landfill Gas (EPA 25C)	N/A	N/A	✓	✓	N/A	✓	N/A	N/A

Notes:
✓ indicates that all quality control criteria were met for the parameter as specified in the prescribed methods and data validation guidelines.
N/A indicates the parameter is not applicable to an analysis.
If criteria were not met and the data were qualified, a page number is indicated where the qualification is detailed.
The data were evaluated for all validation criteria and were found to be in control except where noted. Any outliers found are described below.

DATA ASSESSMENT

VOLATILE ORGANIC ANALYSIS

I. Blank Contamination

A. Due to common laboratory contamination, the following results are considered nondetected (U4).

- Acetone in field blank sample SGFBSG002
- Methylene chloride in samples SG06SG001, SG08SG001, and SGFBSG002
- 2-Butanone in samples SG06SG001, SG08SG001, and SG15SG001

Acetone, methylene chloride, and 2-butanone are considered common laboratory contaminants when found at levels less than 10x the reporting limit (RL) in the samples.

B. Due to field blank contamination, the following results are considered nondetected (U2).

- 1,2,4-Trimethylbenzene and hexane in sample SG06SG001
- Toluene in samples SG07SG001 and SG08SG001

The following compounds were detected in the associated field blank at the concentrations noted below.

Compound	Blank ID	Concentration, ppbv
1,2,4-Trimethylbenzene	SGFBSG002	1.0
Hexane	SGFBSG002	2.6
Toluene	SGFBSG002	1.1

Detected results less than 5x the blank contamination were qualified.

II. Other Qualifications

A. The following detected results are qualified as estimated (J).

- All VOA detected results below the RL

Detected results reported below the RL are considered to be qualitatively acceptable, but quantitatively unreliable due to the uncertainty in analytical precision near the limit of detection.

Full Validation Criteria for Sample SG08SG001

III. GC/MS Tuning

A. The ion abundance criteria were met for the bromofluorobenzene (BFB) GC/MS performance checks. The sample was analyzed within 12 hours of the associated performance check.

IV. Target Compound List (TCL) Identification

A. The relative retention times, mass spectra, and peak identifications of the sample were evaluated. Target compound identification was considered to be correct.

V. Compound Quantitation and Reported Detection Limits

A. Sample results were recalculated, with the proper dilution factors used to calculate the sample results. The target analytes in the sample were correctly quantitated. The reported detection limits were consistent with the contract required reporting limits and reflect any dilutions performed.

VI. System Performance

A. The samples were evaluated for reconstructed ion chromatogram (RIC) baseline shifts, extraneous peaks, loss of resolution, and peak tailing. Except for slightly elevated baseline observed for some samples, no other system degradation was noted.

LANDFILL GAS (EPA 3C) ANALYSIS

I. Other Qualifications

A. The following detected results are qualified as estimated (J8).

- Oxygen in samples SG06SG001 and SGFBSG002
- Methane in sample SG07SG001

The results reported for oxygen in samples SG06SG001 and SGFBSG002 and for methane in sample SG07SG007 exceed the instrument calibration range. The results are considered quantitatively uncertain. No further dilution was performed on samples SG06SG001, SG07SG001, and SGFBSG002.

Full Validation Criteria for Sample SG07SG001

II. Analyte Quantitation and Reported Detection Limits

A. Sample results were recalculated, with the proper dilution factors used to calculate the sample results. The target analytes in the sample were correctly quantitated. The reported detection limits were consistent with the contract required reporting limit and reflect any dilutions performed.

LANDFILL GAS (EPA 25C) ANALYSIS

I. Blank Contamination

A. Due to field blank contamination, the following results are considered nondetected (U2).

- NMOC in samples SG06SG001 and SG15SG001

The following analyte was detected in the associated field blank at the concentration noted below.

Compound	Blank ID	Concentration, ppmv
NMOC	SGFBSG002	7.0

Detected results less than 5x the blank contamination were qualified.

Full Validation Criteria for Sample SG07SG001

II. Analyte Quantitation and Reported Detection Limits

A. Sample results were recalculated, with the proper dilution factors used to calculate the sample results. The target analytes in the sample were correctly quantitated. The reported detection limits were consistent with the contract required reporting limit and reflect any dilutions performed.

OVERALL ASSESSMENT OF DATA

I. Method Compliance and Additional Comments

A. For all of the analyses, the standard certificates and preparations were not provided for review. Additionally, the laboratory stated (via telephone communication) that the standards used for the instrument calibration and QC samples came from the same manufacturer because of the commercial unavailability of a second source standard. The effect of this deficiency on data quality is not known.

II. Usability

A. Due to contamination and quantitation problems, several results for TO-15, EPA 3C, and EPA 25C analyses were qualified. Several VOA results and two NMOC results were qualified as nondetected due to common and field blank contamination. Two results for oxygen and one result for methane were estimated due to quantitation problems.

B. Sample SG08SG001 was reanalyzed at a higher dilution due to matrix interference observed in the initial analysis. The higher diluted analysis should be used as the final validated results for all of the VOA analytes.

C. The quality control criteria reviewed, other than those discussed above, were met and are considered acceptable. No data were rejected. Estimated sample results (J) are usable only for limited purposes. Based upon the cursory and full data validation, all other results are considered valid and usable for all purposes. In general, the absence of rejected data and the small number of qualifiers added to the data indicate high usability.

Tetra Tech EM Inc.
DATA VALIDATION REPORT

Site:	Hunters Point Shipyard Parcel E Landfill Gas
Delivery Order (DO) No.:	003
Laboratory:	Atmospheric Analysis & Consulting, Inc.
Data Reviewer:	Sripriya Kannan, 3J Environmental Services
Review Date:	May 16, 2002

Sample Delivery Group (SDG) No.: HAN03

Sample Nos.: SG01SG001*
SG01SG002
SG04SG001
SG04SG002
SG24SG001
SG24SG002
SGFBSG003

* Full Validation Sample

Matrix: Air

Collection Date(s): March 27, 2002

The data were qualified according to the U.S. Environmental Protection Agency (EPA) document "USEPA Contract Laboratory Program National Functional Guidelines for Organic Data Review" (October 1999). In addition, the TtEMI document "Data Validation Guidelines for Non-CLP Organic Analyses" was used along with other specified criteria in the EPA methods and the Hunters Point Shipyard Parcel E Nonstandard Data Gaps Investigation Analytical Services Statement of Work (March 2002). Data validation requirements are presented below.

I certify that all data validation criteria outlined in the above referenced documents were assessed, and any qualifications made to the data were in accordance with those documents.

Certified by

DATA VALIDATION REQUIREMENTS

Full validation includes all parameters listed below. An asterisk (*) indicates cursory validation parameters.

Non-CLP Organic Parameters

*	Method compliance
*	Holding times
*	Initial and continuing calibrations
*	Blanks
*	Matrix spike/matrix spike duplicate
*	Laboratory control sample or blank spike
*	Field duplicates
*	Matrix duplicates
*	Surrogate recovery
*	Internal standard performance
	Target compound identification
	Analyte quantitation
	Reported detection limits
*	Overall assessment of data for the SDG

DATA VALIDATION QUALIFIERS AND CODES

Data Validation Qualifiers

U	Nondetected result
J	Estimated result
R	Rejected result

Data Validation Qualifier Codes

U2	Qualified due to field blank
U4	Qualified because it's a common laboratory contaminant
J8	Exceeds calibration range
J	Quantification below reporting limit

TABLE 1
CURSORY DATA VALIDATION SUMMARY

Analysis{PRIVATE }	Holding Times	Surrogates	MS/MSD	Matrix Duplicates	LCS	Blanks	Calibrations	Internal Standards	Field Duplicates	Other
VOA (TO-15)	✓	✓	✓	✓	✓	pg. 6	✓	✓	pg. 7	pg. 6
Landfill Gas (EPA 3C)	✓	N/A	✓	✓	✓	✓	✓	N/A	✓	pg. 8
Landfill Gas (EPA 25C)	✓	N/A	✓	✓	✓	pg. 9	✓	N/A	pg. 9	✓

Notes:
✓ indicates that all quality control criteria were met for the parameter as specified in the prescribed methods and data validation guidelines.
N/A indicates the parameter is not applicable to an analysis.
If criteria were not met and the data were qualified, a page number is indicated where the qualification is detailed.
The data were evaluated for all validation criteria and were found to be in control except where noted. Any outliers are described in the text.

TABLE 2
FULL DATA VALIDATION SUMMARY
Samples SG01SG001

Analysis{PRIVATE }	GC/MS Tuning	Target Compound List Identification	Compound or Analyte Quantification	Reported Detection Limits	Tentatively Identified Compounds	System Performance	Interference Check Sample	Graphite Furnace Quality Control
VOA (TO-15)	✓	✓	✓	✓	N/A	✓	N/A	N/A
Landfill Gas (EPA 3C)	N/A	N/A	✓	✓	N/A	✓	N/A	N/A
Landfill Gas (EPA 25C)	N/A	N/A	✓	✓	N/A	✓	N/A	N/A

Notes:
✓ indicates that all quality control criteria were met for the parameter as specified in the prescribed methods and data validation guidelines.
N/A indicates the parameter is not applicable to an analysis.
If criteria were not met and the data were qualified, a page number is indicated where the qualification is detailed.
The data were evaluated for all validation criteria and were found to be in control except where noted. Any outliers found are described below.

DATA ASSESSMENT

VOLATILE ORGANIC ANALYSIS

I. Blank Contamination

A. Due to common laboratory contamination, the following results are considered nondetected (U4).

- Acetone in samples SG01SG002, SG24SG001, SG24SG002, and SGFBSG003
- 2-Butanone in samples SG04SG001, SG24SG001, SG24SG002, and SGFBSG003
- Methylene chloride in samples SG01SG001, SG01SG002, SG04SG002, SG24SG001, SG24SG002, and SGFBSG003

Acetone, methylene chloride, and 2-butanone are considered common laboratory contaminants when found at levels less than 10x the reporting limit (RL) in the samples.

B. Due to field blank contamination, the following results are considered nondetected (U2).

- 1,4-Dichlorobenzene and benzene in sample SG24SG001
- Chloromethane in sample SG01SG002
- Ethylbenzene, heptane, and propylene in sample SG24SG002
- Hexane in samples SG24SG001 and SG24SG002
- Ethanol in samples SG01SG001, SG01SG002, SG04SG002, and SG24SG001
- Toluene in samples SG01SG002, SG04SG001, SG04SG002, SG24SG001, and SG24SG002

The following compounds were detected in the associated field blank at the concentrations noted below.

Compound	Blank ID	Concentration, ppbv
1,4-Dichlorobenzene	SGFBSG003	0.88
Benzene	SGFBSG003	0.73
Chloromethane	SGFBSG003	0.78
Cyclohexane	SGFBSG003	0.78
Dichlorodifluoromethane	SGFBSG003	0.79
Ethylbenzene	SGFBSG003	0.86
Heptane	SGFBSG003	0.86
Hexane	SGFBSG003	8.5
Propylene	SGFBSG003	10
Ethanol	SGFBSG003	6.9
Toluene	SGFBSG003	5.0

Detected results less than 5x the blank contamination were qualified.

II. Other Qualifications

A. The following detected results are qualified as estimated (J).

- All VOA detected results below the RL

Detected results reported below the RL are considered to be qualitatively acceptable, but quantitatively unreliable due to the uncertainty in analytical precision near the limit of detection.

III. Field Duplicates

A. The following RPDs were obtained for the field duplicate samples, SG24SG001 and SG24SG002:

- 181% for 1,2,4-Trimethlybenzene,
- 138% for 2-Butanone
- 136% for Heptane
- 57% for Methylene chloride
- 150% for Propylene
- 82% for Toluene

For air samples, the field RPD guidelines is ±50%. The data are not qualified on the basis of field duplicate results.

Full Validation Criteria for Sample SG01SG001

IV. GC/MS Tuning

A. The ion abundance criteria were met for the bromofluorobenzene (BFB) GC/MS performance checks. The sample was analyzed within 12 hours of the associated performance check.

V. Target Compound List (TCL) Identification

A. The relative retention times, mass spectra, and peak identifications of the sample were evaluated. Target compound identification was considered to be correct.

VI. Compound Quantitation and Reported Detection Limits

A. Sample results were recalculated, with the proper dilution factors used to calculate the sample results. The target analytes in the sample were correctly quantitated. The reported detection limits were consistent with the contract required reporting limits and reflect any dilutions performed.

VII. System Performance

A. The samples were evaluated for reconstructed ion chromatogram (RIC) baseline shifts, extraneous peaks, loss of resolution, and peak tailing. Except for slightly elevated baseline observed for some samples, no other system degradation was noted.

LANDFILL GAS (EPA 3C) ANALYSIS

I. Other Qualifications

A. The following detected results are qualified as estimated (J8).

- Oxygen in sample SG24SG002 and field blank sample SGFBSG003
- Carbon dioxide and methane in samples SG01SG001, SG01SG002, and SG04SG001

The results reported for oxygen, carbon dioxide and methane in the samples exceed the instrument calibration range. The results are considered quantitatively uncertain. No further dilutions were performed on samples SG01SG001, SG01SG002, SG04SG001, SG24SG002, and SGFBSG003.

Full Validation Criteria for Sample SG01SG001

II. Analyte Quantitation and Reported Detection Limits

A. Sample results were recalculated, with the proper dilution factors used to calculate the sample results. The target analytes in the sample were correctly quantitated. The reported detection limits were consistent with the contract required reporting limit and reflect any dilutions performed.

LANDFILL GAS (EPA 25C) ANALYSIS

Full Validation Criteria for Sample SG01SG001

I. Blank Contamination

A. Due to field blank contamination, the following results are considered nondetected (U2).

- Methane in samples SG24SG001 and SG24SG002

The following compound was detected in the associated field blank at the concentration noted below.

Compound	Blank ID	Concentration, ppmv
Methane	SGFBSG003	468

Detected results less than 5x the blank contamination were qualified.

II. Field Duplicates

A. The following RPD was obtained for the field duplicate samples, SG24SG001 and SG24SG002:

- 177% for Methane

For air samples, the field RPD guideline is ±50%. The data are not qualified on the basis of field duplicate results.

III. Analyte Quantitation and Reported Detection Limits

A. Due to methane results outside of the linear range of the instrument, results for samples SG01SG001, SG01SG002 and SG04SG002 were not obtained using EPA Method 25C. The laboratory reported the % methane results for these samples from EPA Method 3C.

B. Sample results were recalculated, with the proper dilution factors used to calculate the sample results. The target analytes in the sample were correctly quantitated. The reported detection limits were consistent with the contract required reporting limit and reflect any dilutions performed.

OVERALL ASSESSMENT OF DATA

I. Method Compliance and Additional Comments

A. For all of the analyses, the standard certificates and preparations were not provided for review. Additionally, the laboratory stated (via telephone communication) that the standards used for the instrument calibration and QC samples came from the same manufacturer because of the commercial unavailability of a second source standard. The effect of this deficiency on data quality is not known.

II. Usability

A. Due to contamination and quantitation problems, several results for TO-15, EPA Method 25C, and EPA Method 3C analyses were qualified. Several VOA results were qualified as nondetected due to common and field blank contamination. Two methane results were qualified as nondetected due to field blank contamination. Two results for oxygen and three results for carbon dioxide and methane were estimated due to quantitation problems.

B. Samples SG01SG001, SG01SG002, SG04SG001 and SG04SG002 were reanalyzed at higher dilutions due to matrix interference in the initial analysis. The diluted analyses were within the calibration range and free of matrix interference. The following diluted results for all of these samples should be used as the final validated results for all of the VOA analytes: SG01SG001DL2, SG01SG002DL2, SG04SG001DL, and SG04SG002DL.

C. The quality control criteria reviewed, other than those discussed above, were met and are considered acceptable. No data were rejected. Estimated sample results (J) are usable only for limited purposes. Based upon the cursory and full data validation, all other results are considered valid and usable for all purposes. In general, the absence of rejected data and the small number of qualifiers added to the data indicate high usability.

DATA VALIDATION REPORT{PRIVATE }

Site:	Hunters Point Shipyard, Parcel E Nonstandard Data Gaps Investigation
Contract Task Order (CTO) No.: DO 003	
Laboratory:	Atmospheric Analysis & Consulting, Inc.
Data Reviewer:	ETHIX
Review Date:	5/13/02

Sample Delivery Group (SDG) No.: HAN04

Sample Nos.:	SG06SG002	SG08SG002 *	SG25SG001DL	SG25SG003
	SG06SG003	SG08SG003	SG25SG002	SG25SG003DL
	SG06SG004	SG25SG001 *	SG25SG002DL	

All samples were received intact and properly labeled.

*Full validation sample

Matrix: Air

Collection Dates: 3/27/02 and 3/28/02

The data were qualified according to the U.S. Environmental Protection Agency (EPA) documents "USEPA Contract Laboratory Program National Functional Guidelines for Organic Data Review" (October 1999) and "USEPA Contract Laboratory Program National Functional Guidelines For Inorganic Data Review" (February 1994). In addition, the Tetra Tech EM Inc. (TtEMI) documents "Data Validation Guidelines for CLP Organic Analyses," "Data Validation Guidelines for CLP Inorganic Analyses," "Data Validation Guidelines for Non-CLP Organic Analyses," "Data Validation Guidelines for Non-CLP Inorganic and Physical Analyses" (August, 1 2001), and the document entitled “TtEMI Comprehensive Long-term Environmental Action Navy II Analytical Services Statement of Work” (May 2000) were used along with other specified criteria in EPA methods. Data validation requirements are presented below.

I certify that all data validation criteria outlined in the above referenced documents were assessed, and any qualifications made to the data were in accordance with those documents.

Certified by

DATA VALIDATION REQUIREMENTS

Full validation includes all parameters listed below. Cursory validation parameters are indicated by an asterisk (*).

CLP Organic Parameters

* Holding times
GC/MS instrument performance check
* Initial and continuing calibrations
* Blanks
* Surrogate recovery
* Matrix spike/matrix spike duplicate
* Laboratory control sample or blank spike *
* Field duplicates
* Internal standard performance
Target compound identification
Tentatively identified compounds
Compound quantitation
Reported detection limits
System performance
* Overall assessment of data for the SDG

CLP Inorganic Parameters

* Holding times
* Initial and continuing calibrations
* Blanks
* Matrix spike
* Laboratory control sample or blank spike
Field duplicates
* Matrix duplicates
ICP interference check sample
GFAA quality control
* ICP serial dilution
Sample result verification
Analyte quantitation
Reported detection limits
* Overall assessment of data for the SDG

Non-CLP Organic and Inorganic Parameters

* Method compliance
* Holding times
* Initial and continuing calibrations
* Blanks
* Matrix spike/matrix spike duplicate
* Laboratory control sample or blank spike
* Field duplicates
* Matrix duplicates
* Surrogate recovery
Analyte quantitation
Reported detection limits
* Overall assessment of data for the SDG

DATA VALIDATION QUALIFIERS AND CODES

Data Validation Qualifiers and Codes

U1	Compound is nondetected due to laboratory blank contamination
U2	Compound is nondetected due to field blank contamination
U4	Compound is nondetected because of common laboratory contamination
J0	Compound is estimated due to internal standard exceedance
J1	Compound is estimated due to noncompliant instrument performance criteria
J2	Compound is estimated due to laboratory duplicate precision exceedance
J3	Compound is estimated due to surrogate/LCS/MS exceedance
J4	Compound is estimated due to serial dilution exceedance
J5	Compound is estimated due to holding time exceedance
J6	Compound is estimated due to field duplicate precision exceedance
J7	Compound is estimated due to calibration exceedance
J8	Compound is estimated due to calibration range exceedance
J9	Compound is estimated due to interference check exceedance (metals) or confirmation problems (dual column analyses)
UJ9	Compound is nondetected and estimated due to confirmation problems (dual column analyses)
R0	Compound is rejected due to internal standard exceedance
R1	Compound is rejected due to holding time exceedance
R2	Compound is rejected due to surrogate/LCS/MS exceedance
R3	Compound is rejected due to noncompliant instrument performance criteria
R7	Compound is rejected due to calibration exceedance

TABLE 1
CURSORY DATA VALIDATION SUMMARY

Analysis{PRIVATE}	Holding Times	Surrogates	MS/MSD	Matrix Duplicates	LCS	Blanks	Calibrations	Internal Standards	Field Duplicates	Other
TO-15	✓	pg. 6	✓	N/A	✓	pg. 6	✓	pg. 7	pg. 7	pg. 9
EPA 3C	✓	N/A	✓	N/A	✓	✓	✓	N/A	pg. 10	pg. 10
EPA 25C	✓	N/A	✓	N/A	✓	✓	✓	N/A	pg. 12	pg. 12

Notes:
✓ indicates that all quality control criteria were met for the parameter as specified in the prescribed methods and data validation guidelines.
N/A indicates the parameter is not applicable to an analysis.
If criteria were not met and the data were qualified, a page number is indicated where the qualification is detailed.
The data were evaluated for all validation criteria and were found to be in control except where noted. Any outliers are described in the text.

TABLE 2
FULL DATA VALIDATION SUMMARY
Samples SG08SG002 and SG25SG001

Analysis{PRIVATE }	GC/MS Tuning	Target Compound List Identification	Compound or Analyte Quantification	Reported Detection Limits	Tentatively Identified Compounds	System Performance	Interference Check Sample	Graphite Furnace Quality Control
TO-15	✓	✓	✓	✓	N/A	✓	N/A	N/A
EPA 3C	N/A	N/A	✓	✓	N/A	✓	N/A	N/A
EPA 25C	N/A	N/A	✓	✓	N/A	✓	N/A	N/A

Notes:
✓ indicates that all quality control criteria were met for the parameter as specified in the prescribed methods and data validation guidelines.
N/A indicates the parameter is not applicable to an analysis.
If criteria were not met and the data were qualified, a page number is indicated where the qualification is detailed.
The data were evaluated for all validation criteria and were found to be in control except where noted. Any outliers found are described below.

DATA ASSESSMENT

TO-15 ANALYSIS

I. Surrogate Recovery

A. Due to surrogate recovery problems, the following detected results are qualified as estimated (J3).

- 1,1,2-trichloro-1,2,2-trifluoroethane, 1,1-dichloroethane, 1,2,4-trimethylbenzene, 1,2-dichloro-1,1,2,2-tetrafluoroethane, 1,2-dichlorobenzene, 1,2-dichloroethane, benzene, chlorobenzene, chloroethane, cis-1,2-dichloroethene, cyclohexane, dichlorodifluoromethane, ethylbenzene, heptane, hexane, m,p-xylenes, methylene chloride, propylene, t-1,2-dichloroethylene, toluene, trichloroethene and vinyl chloride in samples SG25SG001, SG25SG002 and SG25SG003
- 1,3-dichlorobenzene, 4-ethyltoluene in samples SG25SG001 and SG25SG003
- 1,4-dichlorobenzene, chloromethane, in sample SGS25G002 and SG25SG003
- 1,1,1-trichloroethane, 1,3,5-trimethylbenzene, in sample SG25SG003
- tetrahydrofuran in sample SG25SG001 and SG25SG002
- tetrachloroethylene is sample SG25SG001
- o-xylene in sample SG25SG003

The surrogates outside of QC limits are listed below.

Sample ID	Surrogate	% R	QC Limits
SG25SG001	BFB	248	75-125
SG25SG002	BFB	310	75-125
SG25SG003	BFB	557	75-125

High percent recoveries indicate that detected results may be biased high.

II. Blank Contamination

A. Due to common laboratory contamination, the following results are considered nondetected (U4).

- acetone in samples SG06SG003 and SG06SG004
- methylene chloride in samples SG06SG002, SG06SG003, SG25SG001, SG25SG001DL, SG25SG002, SG25SG002DL, SG25SG003, SG25SG003DL, SG06SG004 and SG08SG003
- 2-Butanone in samples SG06SG002, SG25SG001DL, SG25SG002DL and SG25SG003DL

Acetone, methylene chloride, and 2-butanone are considered common laboratory contaminants when found at levels less than 5x the CRQL in environmental samples and not found in the associated blanks.

III. Internal Standards

A. Due to internal standard problems, the following detected and nondetected results are qualified as estimated (J0/UJ0).

- All compounds quantitated using chlorobenzene-d5 in samples SG25SG001, SG25SG002 and SG25SG003

The internal standard area counts in the samples listed above were less than one half of the reference standard and are listed below.

Sample	Internal Standard	Value	QC Limits
SG25SG001	chlorobenzene-d5	1892485	2977695 - 1190780
SG25SG002	chlorobenzene-d5	1765697	2977695 - 1190780
SG25SG003	chlorobenzene-d5	1562993	2977695 - 1190780

Internal standard area counts of less than 50% of the standard area count may indicate a loss of instrument sensitivity.

IV. Field Duplicates

A. The following RPDs were obtained for the field duplicate samples SG25SG001 / SG25SG002:

- 42.7% for propylene
- 163% for dichlorodifluoromethane
- 12% for 1,2-dichloro-1,1,2,2-tetrafluoroethane
- 56.9% for vinyl chloride
- 4.7% for chloroethane
- 2.4% for methylene chloride
- 10.2% for 1,1,2-trichloro-1,2,2-trifluoroethane
- 58.1% for t-1,2-dichloroethylene
- 47.3% for 1,1-dichloroethane
- 87.8% for cis-1,2-dichloroethene
- 1.6% for hexane
- 18.2% for tetrahydrofuran
- 4.9% for 1,2-dichloroethane
- 5.8% for benzene
- 9.9% for cyclohexane
- 155% for trichloroethene
- 167% for heptane
- 20% for toluene
- NQ for tetrachloroethylene
- 196% for chlorobenzene
- 70% for ethylbenzene
- 15% for m,p-xylenes
- NQ for 4-ethyltoluene
- 44% for 1,2,4-trimethylbenzene
- NQ for 1,3-dichlorobenzene
- 37% for 1,2-dichlorobenzene
- NQ for chloromethane

- NQ for 1,4-dichlorobenzene

The following RPDs were obtained for the field duplicate samples SG25SG001 / SG25SG002:

- 16% for propylene
- 11% for dichlorodifluoromethane
- 15% for chloromethane
- 9% for 1,2-dichloro-1,1,2,2-tetrafluoroethane
- 8% for vinyl chloride
- 8% for chloroethane
- 138% for ethanol
- 8% for methylene chloride
- 32% for carbon disulfide
- 0% for 1,1,2-trichloro-1,2,2-trifluoroethane
- 12% for 1,2-dichloroethene
- 5% for 1,1-dichloroethane
- 61% for 2-butanone
- 4% for cis-1,2-dichloroethene
- 9% for hexane
- 16% for tetrahydrofuran
- 15% for 1,2-dichloroethane
- 2% for benzene
- 1% for cyclohexane
- 130% for trichloroethene
- 2% for heptane
- 0% for 1,1,2-trichloroethane
- 15% for toluene
- NQ for tetrachloroethylene
- 33% for chlorobenzene
- 21% for ethylbenzene
- 31% for m,p-xylenes
- NQ for styrene
- 48% for o-xylene
- 33% for 4-ethyltoluene
- 32% for 1,3,5-trimethylbenzene
- 0% for 1,2,4-trimethylbenzene
- 59% for 1,3-dichlorobenzene
- 5% for 1,4-dichlorobenzene
- 62% for 1,2-dichlorobenzene
- NQ for MIBK
- NQ for 1,2,4-trichlorobenzene
- NQ for hexachlorobutadiene

For air samples, the field RPD guideline is $\pm$ 30. The data are not qualified on the basis of field duplicate results.

V. Other Qualifications

A. The following results are qualified as estimated (J).

- All TO-15 detected results reported below the CRQL

Detected results reported below the CRQL are considered to be qualitatively acceptable, but quantitatively unreliable due to the uncertainty in analytical precision near the limit of detection.

B. The following detected results are qualified as estimated (J8) due to calibration range exceedance.

- hexane in samples SG25SG001, SG25SG002 and SG25SG003

Analytes detected at concentrations exceeding the calibration range are quantitatively unreliable. The samples listed above were appropriately diluted and reanalyzed.

Full Validation Criteria for Sample SG08SG002 and SG25SG001

VI. GC/MS Tuning

A. The ion abundance criteria were met for the bromofluorobenzene (BFB) GC/MS performance check. The samples were analyzed within 12 hours of the associated performance check.

VII. Target Compound List (TCL) Identification

A. The relative retention times, mass spectra, and peak identifications of the samples were evaluated. Target compound identification was considered to be correct.

VIII. Compound Quantitation and Reported Detection Limits

A. Sample results were recalculated with the proper dilution factors and volumes used to calculate the sample results. The samples were found to be correctly quantitated. The reported detection limits were consistent with TtEMI's required report limits and reflect any dilutions and volumes used.

IX. System Performance

A. The samples were evaluated for reconstructed ion chromatogram (RIC) baseline shifts, extraneous peaks, loss of resolution, and peak tailing. Matrix interference was observed in the original analysis of sample SG25SG001.

EPA METHOD 3C ANALYSIS

I. Field Duplicates

A. The following RPDs were obtained for the field duplicate samples SG25SG001 / SG25SG002:

- 13.8% for oxygen
- 9.5% for nitrogen
- 1.6% for methane
- 0% for carbon dioxide

For air samples, the field RPD guideline is ± 30%. The data are not qualified on the basis of field duplicate results.

II. Other Qualifications

A. The following detected results are qualified as estimated (J8) due to calibration range exceedance.

- Carbon dioxide in samples SG25SG001 and SG25SG002
- Methane in samples SG25SG001, SG25SG002 and SG25SG003

Analytes detected at concentrations exceeding the calibration range are quantitatively unreliable. The samples listed above were not appropriately diluted and reanalyzed.

Full Validation Criteria for Sample SG08SG002 and SG25SG001

III. Compound Quantitation and Reported Detection Limits

A. Sample results were recalculated, with the proper dilution factors and volumes used to calculate the sample results. The samples were found to be correctly quantitated. The reported detection limits were consistent with TtEMI's required report limits and reflect any dilutions and volumes used.

IV. System Performance

A. The samples were evaluated for baseline shifts, extraneous peaks, loss of resolution, and peak tailing. No system degradation was noted.

EPA METHOD 25C ANALYSIS

I. Field Duplicates

A. The following RPDs were obtained for the field duplicate samples SG25SG001 / SG25SG002:

- 1.8% for methane
- 7.6% for NMOC

For air samples, the field RPD guideline is ± 30%. The data are not qualified on the basis of field duplicate results.

II. Other Qualifications

A. The following results are qualified as estimated (J).

- All detected results reported below the TtEMI required report limit (RL)

Detected results reported below the RL are considered to be qualitatively acceptable, but quantitatively unreliable due to the uncertainty in analytical precision near the limit of detection.

B. The following detected results are estimated (J8) due to calibration range exceedance.

- Methane in samples SG06SG002, SG06SG003, SG08SG002, SG08SG003, SG25SG001, SG25SG002 and SG25SG003

Analytes detected at concentrations exceeding the calibration range are quantitatively unreliable. The samples listed above were not appropriately diluted and reanalyzed.

Full Validation Criteria for Sample SG08SG002 and SG25SG001

III. Compound Quantitation and Reported Detection Limits

A. Sample results were recalculated, with the proper dilution factors and volumes used to calculate the sample results. The samples were found to be correctly quantitated. The reported detection limits were consistent with TtEMI's required report limits and reflect any dilutions and volumes used.

IV. System Performance

A. The samples were evaluated for baseline shifts, extraneous peaks, loss of resolution, and peak tailing. No system degradation was noted.

OVERALL ASSESSMENT OF DATA

I. Method Compliance and Additional Comments

A. Results reported on the laboratory hardcopy do not match the electronic data deliverable (EDD) due to rounding. The incorrect sample date was reported in the EDD for samples SG06SG004 and SG08SG002. The result reported in the EDD for NMOC and carbon dioxide for SG06SG004 have been corrected to reflect results reported on the laboratory hardcopy.

II. Usability

A. Due to high surrogate recovery in the TO-15 analyses, detected results for twenty-nine compounds in sample SG25SG003, detected results for twenty-seven compounds in sample SG25SG001, and detected results for twenty-six compounds in sample SG25SG002 were qualified as estimated. Due to internal standard problems, detected and nondetected results for compounds quantitated using chlorobenzene-d5 for three samples are qualified as estimated. Due to calibration range exceedance, detected hexane results for three samples are qualified as estimated. Samples exceeding the calibration range were appropriately diluted and reanalyzed. Due to common laboratory contamination, detected methylene chloride results for ten samples; detected 2-butanone results for four samples; and detected acetone results for two samples are qualified as nondetected.

B. Due to calibration range exceedance in the EPA Method 3C analyses detected methane results for three samples and detected carbon dioxide results for two samples are qualified as estimated. Samples exceeding the calibration range were not appropriately diluted and reanalyzed.

C. Due to calibration range exceedance in the EPA Method 25C analyses, detected methane results for seven samples were qualified as estimated. Samples exceeding the calibration range were not appropriately diluted and reanalyzed.

D. For the TO-15 analyses, samples SG25SG001, SG25SG002 and SG25SG003 exhibited low internal standard response for chlorobenzene-d5; reanalysis was performed at a dilution with internal standard response within limits.

E. Samples SG25SG001, SG25SG002 and SG25SG003 were reanalyzed for the TO-15 compounds due to low internal standard response. The sample was reanalyzed at a dilution with internal standard chlorobenzene-d5 within limits. The original analysis should be used as the final validated result for all compounds that are not quantitated using chlorobenzene-d5 and although the reporting limits will be higher, compounds quantitated using chlorobenzene-d5 should be used from the reanalysis.

F. The quality control criteria reviewed, other than those discussed above, were met and are considered acceptable. Sample results that were found to be rejected (R) are unusable for all purposes. Sample results that were found to be estimated (J) are usable for limited purposes only. Based upon the cursory and full data validation all other results are considered valid and usable for all purposes. In general, the absence of rejected data and the small number of qualifiers added to the data indicate high usability.

DATA VALIDATION REPORT{PRIVATE }

Site: Hunters Point Shipyard, Parcel E
Nonstandard Data Gaps Investigation
Contract Task Order (CTO) No.: DO 003
Laboratory: Atmospheric Analysis & Consulting, Inc.
Data Reviewer: ETHIX
Review Date: 5/15/02

Sample Delivery Group (SDG) No.: HAN05

Sample Nos.:	SG05SG001	SG05SG003	SG05SG005	SG07SG003
	SG05SG002	SG05SG004 *	SG07SG002	SGFBSG004

All samples were received intact and properly labeled.

*Full validation sample

Matrix: Air

Collection Dates: 3/28/02 and 3/29/02

The data were qualified according to the U.S. Environmental Protection Agency (EPA) documents "USEPA Contract Laboratory Program National Functional Guidelines for Organic Data Review" (October 1999) and "USEPA Contract Laboratory Program National Functional Guidelines For Inorganic Data Review" (February 1994). In addition, the Tetra Tech EM Inc. (TtEMI) documents "Data Validation Guidelines for CLP Organic Analyses," "Data Validation Guidelines for CLP Inorganic Analyses," "Data Validation Guidelines for Non-CLP Organic Analyses," "Data Validation Guidelines for Non-CLP Inorganic and Physical Analyses" (August 1, 2001), and the document entitled “TtEMI Comprehensive Long-term Environmental Action Navy II Analytical Services Statement of Work” (May 2000) were used along with other specified criteria in EPA methods. Data validation requirements are presented below.

I certify that all data validation criteria outlined in the above referenced documents were assessed, and any qualifications made to the data were in accordance with those documents.

Certified by

DATA VALIDATION REQUIREMENTS

Full validation includes all parameters listed below. Cursory validation parameters are indicated by an asterisk (*).

CLP Organic Parameters

* Holding times
GC/MS instrument performance check
* Initial and continuing calibrations
* Blanks
* Surrogate recovery
* Matrix spike/matrix spike duplicate
* Laboratory control sample or blank spike *
* Field duplicates
* Internal standard performance
Target compound identification
Tentatively identified compounds
Compound quantitation
Reported detection limits
System performance
* Overall assessment of data for the SDG

CLP Inorganic Parameters

* Holding times
* Initial and continuing calibrations
* Blanks
* Matrix spike
* Laboratory control sample or blank spike
Field duplicates
* Matrix duplicates
ICP interference check sample
GFAA quality control
* ICP serial dilution
Sample result verification
Analyte quantitation
Reported detection limits
* Overall assessment of data for the SDG

Non-CLP Organic and Inorganic Parameters

* Method compliance
* Holding times
* Initial and continuing calibrations
* Blanks
* Matrix spike/matrix spike duplicate
* Laboratory control sample or blank spike
* Field duplicates
* Matrix duplicates
* Surrogate recovery
Analyte quantitation
Reported detection limits
* Overall assessment of data for the SDG

DATA VALIDATION QUALIFIERS AND CODES

Data Validation Qualifiers and Codes

U1	Compound is nondetected due to laboratory blank contamination
U2	Compound is nondetected due to field blank contamination
U4	Compound is nondetected because of common laboratory contamination
J0	Compound is estimated due to internal standard exceedance
J1	Compound is estimated due to noncompliant instrument performance criteria
J2	Compound is estimated due to laboratory duplicate precision exceedance
J3	Compound is estimated due to surrogate/LCS/MS exceedance
J4	Compound is estimated due to serial dilution exceedance
J5	Compound is estimated due to holding time exceedance
J6	Compound is estimated due to field duplicate precision exceedance
J7	Compound is estimated due to calibration exceedance
J8	Compound is estimated due to calibration range exceedance
J9	Compound is estimated due to interference check exceedance (metals) or confirmation problems (dual column analyses)
UJ9	Compound is nondetected and estimated due to confirmation problems (dual column analyses)
R0	Compound is rejected due to internal standard exceedance
R1	Compound is rejected due to holding time exceedance
R2	Compound is rejected due to surrogate/LCS/MS exceedance
R3	Compound is rejected due to noncompliant instrument performance criteria
R7	Compound is rejected due to calibration exceedance

TABLE 1
CURSORY DATA VALIDATION SUMMARY

Analysis{PRIVATE }	Holding Times	Surrogates	MS/MSD	Matrix Duplicates	LCS	Blanks	Calibrations	Internal Standards	Field Duplicates	Other
TO-15	✓	pg. 6	✓	N/A	✓	pg. 6	✓	pg. 7	pg. 8	pg. 8
EPA 3C	✓	N/A	✓	N/A	✓	pg. 9	✓	N/A	pg. 9	pg. 9
EPA 25C	✓	N/A	✓	N/A	✓	✓	✓	N/A	pg. 11	pg. 11

Notes:
✓ indicates that all quality control criteria were met for the parameter as specified in the prescribed methods and data validation guidelines.
N/A indicates the parameter is not applicable to an analysis.
If criteria were not met and the data were qualified, a page number is indicated where the qualification is detailed.
The data were evaluated for all validation criteria and were found to be in control except where noted. Any outliers are described in the text.

TABLE 2
FULL DATA VALIDATION SUMMARY
Sample SG05SG004

Analysis{PRIVATE }	GC/MS Tuning	Target Compound List Identification	Compound or Analyte Quantification	Reported Detection Limits	Tentatively Identified Compounds	System Performance	Interference Check Sample	Graphite Furnace Quality Control
TO-15	✓	✓	✓	✓	N/A	✓	N/A	N/A
EPA 3C	N/A	N/A	✓	✓	N/A	✓	N/A	N/A
EPA 25C	N/A	N/A	✓	✓	N/A	✓	N/A	N/A

Notes:
✓ indicates that all quality control criteria were met for the parameter as specified in the prescribed methods and data validation guidelines.
N/A indicates the parameter is not applicable to an analysis.
If criteria were not met and the data were qualified, a page number is indicated where the qualification is detailed.
The data were evaluated for all validation criteria and were found to be in control except where noted. Any outliers found are described below.

DATA ASSESSMENT

TO-15 ANALYSIS

I. Surrogate Recovery

A. Due to surrogate recovery problems, the following detected results are qualified as estimated (J3).

- Propylene, dichlorodifluoromethane, 1,2-dichloro-1,1,2,2-tetrafluoroethane, vinyl chloride, 1,3-butadiene, chloroethane, ethanol, acetone, methylene chloride, carbon disulfide, t-1,2-dichloroethylene, 1,1-dichloroethane, cis-1,2-dichloroethene, hexane, benzene, cyclohexane, trichloroethene, heptane, toluene, tetrachloroethylene, ethylbenzene, m- & p-xylenes, styrene, o-xylene 4-ethyltoluene, 1,3,5-trimethylbenzene, 1,2,4-trimethylbenzene, 1,3-dichlorobenzene, 1,4-dichlorbenzene, 1,2-dichlorobenzene, 1,2,4-trichlorobenzene, and hexachlorbutadiene in sample SG05SG001

- Dichlorodifluoromethane, 1,2-dichloro-1,1,2,2-tetrafluoroethane, 1,3-butadiene, chloroethane, ethanol, methylene chloride, carbon disulfide, t-1,2-dichloroethylene, 1,1-dichloroethane, cis-1,2-dichloroethene, hexane, benzene, cyclohexane, heptane, m- & p-xylenes, and 1,2,4-trichlorobenzene in sample SG05SG003

The surrogates outside of QC limits are listed below.

Sample ID	Surrogate	% R	QC Limits
SG05SG001	BFB	128	75-125
SG05SG003	BFB	139	75-125

High percent recoveries indicate that detected results may be biased high.

II. Blank Contamination

A. Due to common laboratory contamination, the following results are considered nondetected (U4).

- acetone in samples SG07SG002 and SG05SG004
- methylene chloride in samples SGFBSG004, SG07SG002, SG07SG003, SG05SG003 and SG05SG004
- 2-Butanone in samples SG07SG003 and SG05SG002

Acetone, methylene chloride, and 2-butanone are considered common laboratory contaminants when found at levels less than 5x the CRQL in environmental samples and not found in the associated blanks.

B. Due to field blank contamination, the following results are considered nondetected (U2).

- dichlorodifluoromethane in samples SG05SG003 and SG05SG004
- chloromethane in sample SG07SG003
- ethanol in samples SG07SG003, SG05SG001 and SG05SG003
- acetone in samples SG07SG003, SG05SG001, SG05SG004 and SG05SG005
- methylene chloride in samples SG05SG001, SG05SG002 and SG05SG005
- carbon disulfide in samples SG05SG002, SG05SG003 and SG05SG004
- hexane in samples SG07SG003 and SG05SG004

The following analytes were detected in the associated field blank at the concentrations noted below.

Analyte	Blank ID	Concentration, ppbv
proplyene	SGFBSG004	4.6
dichlorodifluoromethane	SGFBSG004	1.1
chloromethane	SGFBSG004	1.0
ethanol	SGFBSG004	8.9
acetone	SGFBSG004	9.4
isopropyl alcohol	SGFBSG004	6.7
methylene chloride	SGFBSG004	5.7
carbon disulfide	SGFBSG004	0.7
hexane	SGFBSG004	4.7

Detected results less than 5x the maximum blank contamination were qualified.

III. Internal Standards

A. Due to internal standard problems, the following detected and nondetected results are qualified as estimated (J0/UJ0).

- All compounds quntitated using chlorobenzene-d5 in samples SG07SG002, SG07SG003, SG05SG001, SG05SG002, SG05SG003, SG05SG004 and SG05SG005

The internal standard area counts in the samples listed above were less than one half of the reference standard and are listed below.

Sample	Internal Standard	Value	QC Limits
SG07SG002	chlorobenzene-d5	2308065	3270154 – 13080616
SG07SG003	chlorobenzene-d5	2113811	3270154 – 13080616
SG05SG001	chlorobenzene-d5	2306324	3426081 – 13704326
SG05SG002	chlorobenzene-d5	2817721	3426081 – 13704326
SG05SG003	chlorobenzene-d5	3393904	3426081 – 13704326
SG05SG004	chlorobenzene-d5	3327843	3426081 – 13704326
SG05SG005	chlorobenzene-d5	3183950	3426081 – 13704326

Internal standard area counts of less than 50% of the standard area count may indicate a loss of instrument sensitivity.

IV. Field Duplicates

A. Field duplicates were not collected for analysis by this method.

V. Other Qualifications

A. The following results are qualified as estimated (J).

- All TO-14 detected results reported below the CRQL

Detected results reported below the CRQL are considered to be qualitatively acceptable, but quantitatively unreliable due to the uncertainty in analytical precision near the limit of detection.

Full Validation Criteria for Sample SG05SG004

VI. GC/MS Tuning

A. The ion abundance criteria were met for the bromofluorobenzene (BFB) GC/MS performance check. The sample was analyzed within 12 hours of the associated performance check.

VII. Target Compound List (TCL) Identification

A. The relative retention times, mass spectra, and peak identifications of the sample were evaluated. Target compound identification was considered to be correct.

VIII. Compound Quantitation and Reported Detection Limits

A. Sample results were recalculated with the proper dilution factors and volumes used to calculate the sample results. The sample was found to be correctly quantitated. The reported detection limits were consistent with TtEMI's required report limits and reflect any dilutions and volumes used.

IX. System Performance

A. The sample was evaluated for reconstructed ion chromatogram (RIC) baseline shifts, extraneous peaks, loss of resolution, and peak tailing. No system degradation was noted. Matrix interference was observed in the region of later eluting compounds. Retention times shifts observed in associated runs in QC analyzed.

EPA METHOD 3C ANALYSIS

I. Blank Contamination

A. Due to field blank contamination, the following results are considered nondetected (U2).

- oxygen in samples SG07SG002, SG07SG003, SG05SG001, SG05SG002, SG05SG003, SG05SG004 and SG05SG005
- nitrogen in samples SG07SG002, SG07SG003, SG05SG001, SG05SG002, SG05SG003, SG05SG004 and SG05SG005
- carbon dioxide in sample SG07SG003

The following analytes were detected in the associated field, trip, and equipment rinsate blanks at the concentrations noted below.

Compound	Blank ID	Concentration, %
Carbon dioxide	SGFBSG004	0.1
Oxygen	SGFBSG004	23
Nitrogen	SGFBSG004	81

Detected results less than 5x the maximum blank contamination were qualified.

II. Field Duplicates

A. Field duplicates were not collected for analysis by this method.

III. Other Qualifications

A. The following results are qualified as estimated (J).

- All EPA Method 3C detected results reported below the TtEMI required report limit (RL)

Detected results reported below the RL are considered to be qualitatively acceptable, but quantitatively unreliable due to the uncertainty in analytical precision near the limit of detection.

B. The following detected results are qualified as estimated (J8) due to calibration range exceedance.

- oxygen in sample SGFBSG004
- methane in sample SG05SG003

Analytes detected at concentrations exceeding the calibration range are quantitatively unreliable. The samples listed above were not appropriately diluted and reanalyzed.

IV. Compound Quantitation and Reported Detection Limits

A. Sample results were recalculated, with the proper dilution factors and volumes used to calculate the sample results. The samples were found to be correctly quantitated. The reported detection limits were consistent with TtEMI's required report limits and reflect any dilutions and volumes used.

V. System Performance

A. The samples were evaluated for baseline shifts, extraneous peaks, loss of resolution, and peak tailing. No system degradation was noted.

EPA METHOD 25C ANALYSIS

I. Field Duplicates

A. Field duplicates were not collected for analysis by this method.

II. Other Qualifications

B. The following detected results are qualified as estimated (J8) due to calibration range exceedance.

- methane in samples SG05SG001, SG05SG002, SG05SG003, SG05SG004 and SG05SG005

Analytes detected at concentrations exceeding the calibration range are quantitatively unreliable. The samples listed above were not appropriately diluted and reanalyzed.

Full Validation Criteria for Sample SG05SG004

III. Compound Quantitation and Reported Detection Limits

A. Sample results were recalculated, with the proper dilution factors and volumes used to calculate the sample results. The samples were found to be correctly quantitated. The reported detection limits were consistent with TtEMI's required report limits and reflect any dilutions and volumes used.

IV. System Performance

A. The samples were evaluated for baseline shifts, extraneous peaks, loss of resolution, and peak tailing. No system degradation was noted.

OVERALL ASSESSMENT OF DATA

I. Method Compliance and Additional Comments

A. Results reported on the laboratory hardcopy do not match the electronic data deliverable (EDD) due to rounding. In some cases low level detects were reported on the laboratory hardcopy but reported as nondetect in the EDD. For TO-15 analyses, dates on the Form Is and EDD were reported as analyzed one day prior to date displayed in the raw data. The results reported in the EDD for carbon dioxide and methane for SG07SG003, and carbon dioxide and oxygen for SGFBSG004 have been corrected to reflect results reported on the laboratory hardcopy.

B. For EPA Methods 3C and 25C, some compounds were reported outside calibration range but not diluted and reanalyzed.

C. The field blank was used as a matrix spike/matrix spike duplicate sample in all methods.

D. Low internal standard response for chlorobenzene-d5 was exhibited in the TO-15 analyses for seven samples and some of the associated method blanks indicating a problem with the internal standard concentration and may not be indicative of matrix problems. Internal standard noncompliance was not noted in the laboratory narrative. Evidence of reanalysis was not observed.

II. Usability

A. Due to high surrogate recoveries in the TO-15 analyses, detected results in sample SG05SG001 and SG05SG003 are qualified as estimated. Due to common laboratory contamination, detected 2-butanone and acetone results for two samples, and detected methylene chloride results for five samples are qualified as nondetected. Due to field blank contamination, detected acetone results for four samples; detected ethanol, methylene chloride, and carbon disulfide results for three samples; detected dichlorodifluoromethane and hexane results for two samples; and detected chloromethane results for one sample are qualified as nondetected.

B. Due to calibration range exceedance in the EPA Method 3C, detected oxygen and methane for one sample are qualified as estimated. Due to field blank contamination, detected nitrogen and oxygen results for seven samples, and the detected carbon dioxide result for one sample are qualified as nondetected.

C. Due to calibration range exceedance in the EPA Method 25C, detected methane results for six samples are qualified as estimated.

D. The quality control criteria reviewed, other than those discussed above, were met and are considered acceptable. Sample results that were found to be rejected (R) are unusable for all purposes. Sample results that were found to be estimated (J) are usable for limited purposes only. Based upon the cursory and full data validation all other results are considered valid and usable for all purposes. In general, the absence of rejected data and the small number of qualifiers added to the data indicate high usability. The high number of qualifications made to the TO-15 data indicate several analytical and/or matrix problems that limit the usability of the data.

DATA VALIDATION REPORT{PRIVATE }

Site:	Hunters Point Shipyard, Parcel E Nonstandard Data Gaps Investigation
Contract Task Order (CTO) No.: DO 003	
Laboratory:	Atmospheric Analysis & Consulting, Inc.
Data Reviewer:	ETHIX
Review Date:	5/16/02

Sample Delivery Group (SDG) No.: HAN06

Sample Nos.:	SG02SG001	SG02SG001DL	SG02SG002 *	SG02SG002DL
	SG25SG004	SG25SG005	SG25SG005DL	SG25SG006 *
	SG25SG006DL	SG25SG007	SG25SG007DL	SGFBSG005
	SGFBSG006			

All samples were received intact and properly labeled.

* Full Validation Sample

Matrix: Air

Collection Dates: 3/28/02, 3/29/02 and 4/1/02

The data were qualified according to the U.S. Environmental Protection Agency (EPA) documents "USEPA Contract Laboratory Program National Functional Guidelines for Organic Data Review" (October 1999) and "USEPA Contract Laboratory Program National Functional Guidelines For Inorganic Data Review" (February 1994). In addition, the Tetra Tech EM Inc. (TtEMI) documents "Data Validation Guidelines for CLP Organic Analyses," "Data Validation Guidelines for CLP Inorganic Analyses," "Data Validation Guidelines for Non-CLP Organic Analyses," "Data Validation Guidelines for Non-CLP Inorganic and Physical Analyses" (August 1, 2001), and the document entitled “TtEMI Comprehensive Long-term Environmental Action Navy II Analytical Services Statement of Work” (May 2000) were used along with other specified criteria in EPA methods. Data validation requirements are presented below.

I certify that all data validation criteria outlined in the above referenced documents were assessed, and any qualifications made to the data were in accordance with those documents.

Certified by

DATA VALIDATION REQUIREMENTS

Full validation includes all parameters listed below. Cursory validation parameters are indicated by an asterisk (*).

CLP Organic Parameters

* Holding times
  GC/MS instrument performance check
* Initial and continuing calibrations
* Blanks
* Surrogate recovery
* Matrix spike/matrix spike duplicate
* Laboratory control sample or blank spike *
* Field duplicates
* Internal standard performance
  Target compound identification
  Tentatively identified compounds
  Compound quantitation
  Reported detection limits
  System performance
* Overall assessment of data for the SDG

CLP Inorganic Parameters

* Holding times
* Initial and continuing calibrations
* Blanks
* Matrix spike
* Laboratory control sample or blank spike
Field duplicates
* Matrix duplicates
  ICP interference check sample
  GFAA quality control
* ICP serial dilution
  Sample result verification
  Analyte quantitation
  Reported detection limits
* Overall assessment of data for the SDG

Non-CLP Organic and Inorganic Parameters

* Method compliance
* Holding times
* Initial and continuing calibrations
* Blanks
* Matrix spike/matrix spike duplicate
* Laboratory control sample or blank spike
* Field duplicates
* Matrix duplicates
* Surrogate recovery
  Analyte quantitation
  Reported detection limits
* Overall assessment of data for the SDG

DATA VALIDATION QUALIFIERS AND CODES

Data Validation Qualifiers and Codes

U1	Compound is nondetected due to laboratory blank contamination
U2	Compound is nondetected due to field blank contamination
U4	Compound is nondetected because of common laboratory contamination
J0	Compound is estimated due to internal standard exceedance
J1	Compound is estimated due to noncompliant instrument performance criteria
J2	Compound is estimated due to laboratory duplicate precision exceedance
J3	Compound is estimated due to surrogate/LCS/MS exceedance
J4	Compound is estimated due to serial dilution exceedance
J5	Compound is estimated due to holding time exceedance
J6	Compound is estimated due to field duplicate precision exceedance
J7	Compound is estimated due to calibration exceedance
J8	Compound is estimated due to calibration range exceedance
J9	Compound is estimated due to interference check exceedance (metals) or confirmation problems (dual column analyses)
UJ9	Compound is nondetected and estimated due to confirmation problems (dual column analyses)
R0	Compound is rejected due to internal standard exceedance
R1	Compound is rejected due to holding time exceedance
R2	Compound is rejected due to surrogate/LCS/MS exceedance
R3	Compound is rejected due to noncompliant instrument performance criteria
R7	Compound is rejected due to calibration exceedance

TABLE 1
CURSORY DATA VALIDATION SUMMARY

Analysis{PRIVATE}	Holding Times	Surrogates	MS/MSD	Matrix Duplicates	LCS	Blanks	Calibrations	Internal Standards	Field Duplicates	Other
TO-15	✓	Pg. 6	✓	N/A	✓	Pg. 6	✓	✓	Pg. 8	Pg. 8
EPA 3C	✓	N/A	✓	N/A	✓	Pg. 10	✓	N/A	Pg. 10	Pg. 10
EPA 25C	✓	N/A	✓	N/A	✓	✓	✓	N/A	Pg. 10	Pg. 10

Notes:
✓ indicates that all quality control criteria were met for the parameter as specified in the prescribed methods and data validation guidelines.
N/A indicates the parameter is not applicable to an analysis.
If criteria were not met and the data were qualified, a page number is indicated where the qualification is detailed.
The data were evaluated for all validation criteria and were found to be in control except where noted. Any outliers are described in the text.

TABLE 2
FULL DATA VALIDATION SUMMARY
Sample SG02SG002 and SG25SG006

Analysis{PRIVATE }	GC/MS Tuning	Target Compound List Identification	Compound or Analyte Quantification	Reported Detection Limits	Tentatively Identified Compounds	System Performance	Interference Check Sample	Graphite Furnace Quality Control
TO-15	✓	✓	✓	✓	N/A	✓	N/A	N/A
EPA 3C	N/A	N/A	✓	✓	N/A	✓	N/A	N/A
EPA 25C	N/A	N/A	✓	✓	N/A	✓	N/A	N/A

Notes:
✓ indicates that all quality control criteria were met for the parameter as specified in the prescribed methods and data validation guidelines.
N/A indicates the parameter is not applicable to an analysis.
If criteria were not met and the data were qualified, a page number is indicated where the qualification is detailed.
The data were evaluated for all validation criteria and were found to be in control except where noted. Any outliers found are described below.

DATA ASSESSMENT

TO-15 ANALYSIS

I. Surrogate Recovery

A. Due to surrogate recovery problems, the following detected results are qualified as estimated (J3).

- 1,1-dichloroethane, 1,2-dichloro-1,1,2,2-tetrafluoroethane, 1,2-dichloroethane, 1,3,5-trimethylbenzene,1,4-dichlorobenzene, benzene, cis-1,2-dichloroethene, dichlorodifluoromethane, heptane, hexane, m,p-xylenes, methylene chloride, o-xylene, propylene, t-1,2-dichloroethylene, toluene and vinyl chloride in samples SG02SG001, SG02SG002, SG25SG005 and SG25SG006
- 1,2,4-trimethylbenzene, ethylbenzene in samples SG02SG001, SG25SG005 and SG25SG006
- 4-ethyltoluene and cyclohexane in samples SG02SG001, SG02SG002 and SG25SG005
- chloroethane in samples SG02SG002, SG25SG005 and SG25SG006
- 1,2-dichlorobenzene, 1,2-dichloropropane, 1,3-dichlorobenzene, carbon disulfide, chlorobenzene and ethanol in samples SG02SG001 and SG02SG002
- chloromethane in samples SG02SG002 and SG25SG005
- trichloroethene in sample SG25SG005 and SG25SG006
- 2- butanone, acetone, bromomethane and tetrahydrofuran in sample SG02SG001
- tetrachloroethylene in sample SG25SG005
- carbon tetrachloride in sample SG25SG006
- 1,1,2-trichloro-1,2,2-trifluoroethane in sample SG02SG002

The surrogates outside of QC limits are listed below.

Sample ID	Surrogate	% R	QC Limits
SG02SG001	4-bromofluorobenzene	164	75-125
SG02SG002	4-bromofluorobenzene	229	75-125
SG25SG005	4-bromofluorobenzene	229	75-125
SG25SG006	4-bromofluorobenzene	221	75-125

High percent recoveries indicate that detected results may be biased high.

II. Blank Contamination

A. Due to common laboratory contamination, the following results are considered nondetected (U4).

- acetone in samples SG02SG001, SG25SG007DL, SGFBSG005 and SGFBSG006
- methylene chloride in samples SG02SG001, SG02SG001DL, SG02SG002, SG02SG002DL, SG25SG005DL, SG25SG006, SG25SG006DL, SG25SG007, SG25SG007DL, SGFBSG005 and SGFBSG006
- 2-butanone in sample SG25SG007

Acetone, methylene chloride, and 2-butanone are considered common laboratory contaminants when found at levels less than 5x the CRQL in environmental samples and not found in the associated blanks.

B. Due to method blank contamination, the following results are considered nondetected (U1).

- propylene in samples SGFBSG005, SGFBSG006 and SG25SG004

The following compounds were detected in the associated method blanks at the concentrations noted below.

Compound	Blank ID	Concentration, ppbv
Propylene	MBA040702-1	0.86

Detected results less than 5x the blank contamination were qualified.

C. Due to field blank contamination, the following results are considered nondetected (U2).

- acetone in samples SG25SG004 and SG25SG007
- chloromethane in samples SG02SG001DL, SG02SG002DL, SG25SG004, SG25SG005DL, SG25SG006DL, SG25SG007 and SG25SG007DL
- dichlorodifluoromethane in samples SG02SG001, SG25SG004 and SG25SG007
- hexachlorobutadiene in samples SG02SG001DL, SG02SG002DL, SG25SG005DL, SG25SG006DL and SG25SG007DL
- hexane in sample SG25SG007
- toluene in samples SG02SG001, SG02SG001DL, SG02SG002, SG02SG002DL, SG25SG006 and SG25SG006DL

The following analytes were detected in the associated field blanks at the concentrations noted below.

Analyte	Blank ID	Concentration, ppbv
Acetone	SGFBSG006	3.1
Chloromethane	SGFBSG005	0.8
Dichlorodifluoromethane	SGFBSG005	0.8
hexachlorobutadiene	SGFBSG005	0.7
hexane	SGFBSG006	0.9
toluene	SGFBSG006	1

Detected results less than 5x or 10x the maximum blank contamination were qualified.

III. Field Duplicates

A. The following RPDs were obtained for the field duplicate samples SG25SG005 / SG25SG006:

- 51% for propylene
- 16% for dichlorodifluoromethane
- NQ for chloromethane
- 17% for 1,2-dichloro-1,1,2,2-tetrafluoroethane
- 11% for vinyl chloride
- 23% for chloroethane
- 104% for methylene chloride
- 6% for t-1,2-dichloroethylene
- 2% for 1,1-dichloroethane
- 5% for cis-1,2-dichloroethene
- 1% for hexane
- 10% for 1,2-dichloroethane
- 13% for benzene
- NQ for carbon tetrachloride
- NQ for cyclohexane
- 182% for trichloroethene
- 5% for heptane
- 162% for toluene
- NQ for tetrachloroethylene
- 27% for ethylbenzene
- 97% for m,p-xylenes
- 143% for o-xylene
- NQ for 4-ethyltoluene
- 96% for 1,3,5-trimethylbenzene
- 35% for 1,2,4-trimethylbenzene
- 12% for 1,4-dichlorobenzene

For air samples, the field RPD guideline is $\pm$ 30%. The data are not qualified on the basis of field duplicate results.

IV. Other Qualifications

A. The following results are qualified as estimated (J).

- All TO-15 detected results reported below the CRQL

Detected results reported below the CRQL are considered to be qualitatively acceptable, but quantitatively unreliable due to the uncertainty in analytical precision near the limit of detection.

B. The following detected results are qualified as estimated (J8) due to calibration range exceedance.

- hexane in samples SG02SG001 and SG02SG002

Analytes detected at concentrations exceeding the calibration range are quantitatively unreliable. The samples listed above were appropriately diluted and reanalyzed.

Full Validation Criteria for Samples SG02SG002 and SG25SG006

V. GC/MS Tuning

A. The ion abundance criteria were met for the bromofluorobenzene (BFB) GC/MS performance check. The samples were analyzed within 12 hours of the associated performance check.

VI. Target Compound List (TCL) Identification

A. The relative retention times, mass spectra, and peak identifications of the samples were evaluated. Target compound identification was considered to be correct.

VII. Compound Quantitation and Reported Detection Limits

A. Sample results were recalculated with the proper dilution factors and volumes used to calculate the sample results. The samples were found to be correctly quantitated. The reported detection limits were consistent with TtEMI's required report limits and reflect any dilutions and volumes used.

IX. System Performance

A. The samples were evaluated for reconstructed ion chromatogram (RIC) baseline shifts, extraneous peaks, loss of resolution, and peak tailing. No system degradation was noted.

EPA METHOD 3C ANALYSIS

I. Blank Contamination

A. Due to field blank contamination, the following results are considered nondetected (U2).

- nitrogen in samples SG02SG001, SG02SG002, SG25SG004, SG25SG005, SG25SG006 and SG25SG007
- oxygen in samples SG02SG001, SG02SG002, SG25SG004, SG25SG005, SG25SG006 and SG25SG007

The following analytes were detected in the associated field blanks at the concentrations noted below.

Compound	Blank ID	Concentration, %
nitrogen	SGFBSG005	81
oxygen	SGFBSG005	19

Detected results less than 5x the maximum blank contamination were qualified.

II. Other Qualifications

A. The following results are qualified as estimated (J).

- Carbon dioxide for SGFBSG006 was reported below the TtEMI required report limit (RL)

Detected results reported below the RL are considered to be qualitatively acceptable, but quantitatively unreliable due to the uncertainty in analytical precision near the limit of detection.

B. The following detected results are qualified as estimated (J8) due to calibration range exceedance.

- carbon dioxide in samples SG02SG002, SG25SG004 and SG25SG006
- oxygen in sample SGFBSG005 and SGFBSG006
- methane in sample SG02SG002, SG25SG004, SG25SG005 and SG25SG006

Analytes detected at concentrations exceeding the calibration range are quantitatively unreliable. The samples listed above were not appropriately diluted and reanalyzed.

III. Field Duplicates

A. The following RPDs were obtained for the field duplicate samples SG25SG005 / SG25SG006:

- 40% for oxygen
- 30% for nitrogen
- 5% for methane
- 9% for carbon dioxide

For air samples, the field RPD guideline is ± 30. The data are not qualified on the basis of field duplicate results.

Full Validation Criteria for Samples SG02SG002 and SG25SG006

IV. Compound Quantitation and Reported Detection Limits

A. Sample results were recalculated, with the proper dilution factors and volumes used to calculate the sample results. The samples were found to be correctly quantitated. The reported detection limits were consistent with TtEMI's required report limits and reflect any dilutions and volumes used.

V. System Performance

A. The samples were evaluated for baseline shifts, extraneous peaks, loss of resolution, and peak tailing. No system degradation was noted.

EPA METHOD 25C ANALYSIS

I. Other Qualifications

A. The following detected results are qualified as estimated (J8) due to calibration range exceedance.

- methane in samples SG02SG001, SG02SG002, SG25SG004, SG25SG005, SG25SG006 and SG25SG007

Analytes detected at concentrations exceeding the calibration range are quantitatively unreliable. The samples listed above were not appropriately diluted and reanalyzed.

II. Field Duplicates

A. The following RPDs were obtained for the field duplicate samples SG01SG004 / SG01SG005:

- 6% for methane
- 4% for NMOC

For air samples, the field RPD guideline is ± 30%. The data are not qualified on the basis of field duplicate results.

Full Validation Criteria for Sample SG02SG002 and SG25SG006

III. Compound Quantitation and Reported Detection Limits

A. Sample results were recalculated, with the proper dilution factors and volumes used to calculate the sample results. The samples were found to be correctly quantitated. The reported detection limits were consistent with TtEMI's required report limits and reflect any dilutions and volumes used.

IV. System Performance

A. The samples were evaluated for baseline shifts, extraneous peaks, loss of resolution, and peak tailing. No system degradation was noted.

OVERALL ASSESSMENT OF DATA

I. Method Compliance and Additional Comments

A. Some results reported on the laboratory hardcopy do not match the electronic data deliverable (EDD) due to rounding. The result reported in the EDD for NMOC for SG25SG005 has been corrected to reflect the result reported on the laboratory hardcopy. For sample SG25SG004, oxygen was qualified as "E" in the EDD; however, the hardcopy did not indicate calibration range exceedance for this compound, therefore oxygen has not been flagged (J8) for this sample.

B. Methane values analyzed by method EPA 25C exceeding the calibration range for samples SG02SG001, SG02SG002, SG25SG005, SG25SG006 and SG25SG007 were obtained from EPA Method 3C.

C. Field blanks were used as matrix spike/matrix spike duplicate samples.

II. Usability

A. Due to high surrogate recovery in the TO-15 analyses, detected results for four samples are qualified as estimated. Due to calibration range exceedance, detected hexane results for two samples are qualified as estimated. Due to common laboratory contamination, detected methylene chloride results for six samples and five dilutions; detected acetone results for three samples; and the detected 2-butanone result for one sample are qualified as nondetected. Due to method blank contamination, detected propylene results for three samples are qualified as nondetected. Due to field blank contamination, detected chloromethane results for two samples and four dilutions; detected dichlorodifluoromethane results for three samples; detected hexachlorobutadiene results for five dilutions; the detected hexane result for one sample; and detected toluene results for three samples and three dilutions are qualified as nondetected.

B. Due to calibration range exceedance in the EPA Method 3C analyses, methane results for four samples, carbon dioxide results for three samples, and the oxygen result for one sample are qualified as estimated. Due to field blank contamination, detected nitrogen and oxygen results for six samples are qualified as nondetected.

C. Due to calibration range exceedance in the EPA Method 25C, methane results for six samples are qualified as estimated.

D. Samples SG02SG001, SG02SG002, SG25SG005, SG25SG006 and SG25SG007 were diluted and reanalyzed for the TO-15 analysis due to matrix interference. The re-extracted samples exhibited similar surrogate recovery problems. The original analysis should be used as the final validated result due to better surrogate recovery.

E. The quality control criteria reviewed, other than those discussed above, were met and are considered acceptable. Sample results that were found to be rejected (R) are unusable for all purposes. Sample results that were found to be estimated (J) are usable for limited purposes only. Based upon the cursory and full data validation all other results are considered valid and usable for all purposes. The high number of qualifications made to the data indicate several analytical and/or matrix problems that limit the usability of the data.

DATA VALIDATION REPORT{PRIVATE }

Site:	Hunters Point Shipyard, Parcel E Nonstandard Data Gaps Investigation
Contract Task Order (CTO) No.: DO 003	
Laboratory:	Atmospheric Analysis & Consulting, Inc.
Data Reviewer:	ETHIX
Review Date:	5/16/02

Sample Delivery Group (SDG) No.: HAN06

Sample Nos.:	SG02SG001	SG02SG001DL	SG02SG002 *	SG02SG002DL
	SG25SG004	SG25SG005	SG25SG005DL	SG25SG006 *
	SG25SG006DL	SG25SG007	SG25SG007DL	SGFBSG005
	SGFBSG006			

All samples were received intact and properly labeled.

* Full Validation Sample

Matrix: Air

Collection Dates: 3/28/02, 3/29/02 and 4/1/02

The data were qualified according to the U.S. Environmental Protection Agency (EPA) documents "USEPA Contract Laboratory Program National Functional Guidelines for Organic Data Review" (October 1999) and "USEPA Contract Laboratory Program National Functional Guidelines For Inorganic Data Review" (February 1994). In addition, the Tetra Tech EM Inc. (TtEMI) documents "Data Validation Guidelines for CLP Organic Analyses," "Data Validation Guidelines for CLP Inorganic Analyses," "Data Validation Guidelines for Non-CLP Organic Analyses," "Data Validation Guidelines for Non-CLP Inorganic and Physical Analyses" (August 1, 2001), and the document entitled “TtEMI Comprehensive Long-term Environmental Action Navy II Analytical Services Statement of Work” (May 2000) were used along with other specified criteria in EPA methods. Data validation requirements are presented below.

I certify that all data validation criteria outlined in the above referenced documents were assessed, and any qualifications made to the data were in accordance with those documents.

Certified by

DATA VALIDATION REQUIREMENTS

Full validation includes all parameters listed below. Cursory validation parameters are indicated by an asterisk (*).

CLP Organic Parameters

* Holding times
  GC/MS instrument performance check
* Initial and continuing calibrations
* Blanks
* Surrogate recovery
* Matrix spike/matrix spike duplicate
* Laboratory control sample or blank spike *
* Field duplicates
* Internal standard performance
  Target compound identification
  Tentatively identified compounds
  Compound quantitation
  Reported detection limits
  System performance
* Overall assessment of data for the SDG

CLP Inorganic Parameters

* Holding times
* Initial and continuing calibrations
* Blanks
* Matrix spike
* Laboratory control sample or blank spike
Field duplicates
* Matrix duplicates
  ICP interference check sample
  GFAA quality control
* ICP serial dilution
  Sample result verification
  Analyte quantitation
  Reported detection limits
* Overall assessment of data for the SDG

Non-CLP Organic and Inorganic Parameters

* Method compliance
* Holding times
* Initial and continuing calibrations
* Blanks
* Matrix spike/matrix spike duplicate
* Laboratory control sample or blank spike
* Field duplicates
* Matrix duplicates
* Surrogate recovery
  Analyte quantitation
  Reported detection limits
* Overall assessment of data for the SDG

DATA VALIDATION QUALIFIERS AND CODES

Data Validation Qualifiers and Codes

U1	Compound is nondetected due to laboratory blank contamination
U2	Compound is nondetected due to field blank contamination
U4	Compound is nondetected because of common laboratory contamination
J0	Compound is estimated due to internal standard exceedance
J1	Compound is estimated due to noncompliant instrument performance criteria
J2	Compound is estimated due to laboratory duplicate precision exceedance
J3	Compound is estimated due to surrogate/LCS/MS exceedance
J4	Compound is estimated due to serial dilution exceedance
J5	Compound is estimated due to holding time exceedance
J6	Compound is estimated due to field duplicate precision exceedance
J7	Compound is estimated due to calibration exceedance
J8	Compound is estimated due to calibration range exceedance
J9	Compound is estimated due to interference check exceedance (metals) or confirmation problems (dual column analyses)
UJ9	Compound is nondetected and estimated due to confirmation problems (dual column analyses)
R0	Compound is rejected due to internal standard exceedance
R1	Compound is rejected due to holding time exceedance
R2	Compound is rejected due to surrogate/LCS/MS exceedance
R3	Compound is rejected due to noncompliant instrument performance criteria
R7	Compound is rejected due to calibration exceedance

TABLE 1
CURSORY DATA VALIDATION SUMMARY

Analysis{PRIVATE}	Holding Times	Surrogates	MS/MSD	Matrix Duplicates	LCS	Blanks	Calibrations	Internal Standards	Field Duplicates	Other
TO-15	✓	Pg. 6	✓	N/A	✓	Pg. 6	✓	✓	Pg. 8	Pg. 8
EPA 3C	✓	N/A	✓	N/A	✓	Pg. 10	✓	N/A	Pg. 10	Pg. 10
EPA 25C	✓	N/A	✓	N/A	✓	✓	✓	N/A	Pg. 10	Pg. 10

Notes:
✓ indicates that all quality control criteria were met for the parameter as specified in the prescribed methods and data validation guidelines.
N/A indicates the parameter is not applicable to an analysis.
If criteria were not met and the data were qualified, a page number is indicated where the qualification is detailed.
The data were evaluated for all validation criteria and were found to be in control except where noted. Any outliers are described in the text.

TABLE 2
FULL DATA VALIDATION SUMMARY
Sample SG02SG002 and SG25SG006

Analysis{PRIVATE }	GC/MS Tuning	Target Compound List Identification	Compound or Analyte Quantification	Reported Detection Limits	Tentatively Identified Compounds	System Performance	Interference Check Sample	Graphite Furnace Quality Control
TO-15	✓	✓	✓	✓	N/A	✓	N/A	N/A
EPA 3C	N/A	N/A	✓	✓	N/A	✓	N/A	N/A
EPA 25C	N/A	N/A	✓	✓	N/A	✓	N/A	N/A

Notes:
✓ indicates that all quality control criteria were met for the parameter as specified in the prescribed methods and data validation guidelines.
N/A indicates the parameter is not applicable to an analysis.
If criteria were not met and the data were qualified, a page number is indicated where the qualification is detailed.
The data were evaluated for all validation criteria and were found to be in control except where noted. Any outliers found are described below.

DATA ASSESSMENT

TO-15 ANALYSIS

I. Surrogate Recovery

A. Due to surrogate recovery problems, the following detected results are qualified as estimated (J3).

- 1,1-dichloroethane, 1,2-dichloro-1,1,2,2-tetrafluoroethane, 1,2-dichloroethane, 1,3,5-trimethylbenzene,1,4-dichlorobenzene, benzene, cis-1,2-dichloroethene, dichlorodifluoromethane, heptane, hexane, m,p-xylenes, methylene chloride, o-xylene, propylene, t-1,2-dichloroethylene, toluene and vinyl chloride in samples SG02SG001, SG02SG002, SG25SG005 and SG25SG006
- 1,2,4-trimethylbenzene, ethylbenzene in samples SG02SG001, SG25SG005 and SG25SG006
- 4-ethyltoluene and cyclohexane in samples SG02SG001, SG02SG002 and SG25SG005
- chloroethane in samples SG02SG002, SG25SG005 and SG25SG006
- 1,2-dichlorobenzene, 1,2-dichloropropane, 1,3-dichlorobenzene, carbon disulfide, chlorobenzene and ethanol in samples SG02SG001 and SG02SG002
- chloromethane in samples SG02SG002 and SG25SG005
- trichloroethene in sample SG25SG005 and SG25SG006
- 2- butanone, acetone, bromomethane and tetrahydrofuran in sample SG02SG001
- tetrachloroethylene in sample SG25SG005
- carbon tetrachloride in sample SG25SG006
- 1,1,2-trichloro-1,2,2-trifluoroethane in sample SG02SG002

The surrogates outside of QC limits are listed below.

Sample ID	Surrogate	% R	QC Limits
SG02SG001	4-bromofluorobenzene	164	75-125
SG02SG002	4-bromofluorobenzene	229	75-125
SG25SG005	4-bromofluorobenzene	229	75-125
SG25SG006	4-bromofluorobenzene	221	75-125

High percent recoveries indicate that detected results may be biased high.

II. Blank Contamination

A. Due to common laboratory contamination, the following results are considered nondetected (U4).

- acetone in samples SG02SG001, SG25SG007DL, SGFBSG005 and SGFBSG006
- methylene chloride in samples SG02SG001, SG02SG001DL, SG02SG002, SG02SG002DL, SG25SG005DL, SG25SG006, SG25SG006DL, SG25SG007, SG25SG007DL, SGFBSG005 and SGFBSG006
- 2-butanone in sample SG25SG007

Acetone, methylene chloride, and 2-butanone are considered common laboratory contaminants when found at levels less than 5x the CRQL in environmental samples and not found in the associated blanks.

B. Due to method blank contamination, the following results are considered nondetected (U1).

- propylene in samples SGFBSG005, SGFBSG006 and SG25SG004

The following compounds were detected in the associated method blanks at the concentrations noted below.

Compound	Blank ID	Concentration, ppbv
Propylene	MBA040702-1	0.86

Detected results less than 5x the blank contamination were qualified.

C. Due to field blank contamination, the following results are considered nondetected (U2).

- acetone in samples SG25SG004 and SG25SG007
- chloromethane in samples SG02SG001DL, SG02SG002DL, SG25SG004, SG25SG005DL, SG25SG006DL, SG25SG007 and SG25SG007DL
- dichlorodifluoromethane in samples SG02SG001, SG25SG004 and SG25SG007
- hexachlorobutadiene in samples SG02SG001DL, SG02SG002DL, SG25SG005DL, SG25SG006DL and SG25SG007DL
- hexane in sample SG25SG007
- toluene in samples SG02SG001, SG02SG001DL, SG02SG002, SG02SG002DL, SG25SG006 and SG25SG006DL

The following analytes were detected in the associated field blanks at the concentrations noted below.

Analyte	Blank ID	Concentration, ppbv
Acetone	SGFBSG006	3.1
Chloromethane	SGFBSG005	0.8
Dichlorodifluoromethane	SGFBSG005	0.8
hexachlorobutadiene	SGFBSG005	0.7
hexane	SGFBSG006	0.9
toluene	SGFBSG006	1

Detected results less than 5x or 10x the maximum blank contamination were qualified.

III. Field Duplicates

A. The following RPDs were obtained for the field duplicate samples SG25SG005 / SG25SG006:

- 51% for propylene
- 16% for dichlorodifluoromethane
- NQ for chloromethane
- 17% for 1,2-dichloro-1,1,2,2-tetrafluoroethane
- 11% for vinyl chloride
- 23% for chloroethane
- 104% for methylene chloride
- 6% for t-1,2-dichloroethylene
- 2% for 1,1-dichloroethane
- 5% for cis-1,2-dichloroethene
- 1% for hexane
- 10% for 1,2-dichloroethane
- 13% for benzene
- NQ for carbon tetrachloride
- NQ for cyclohexane
- 182% for trichloroethene
- 5% for heptane
- 162% for toluene
- NQ for tetrachloroethylene
- 27% for ethylbenzene
- 97% for m,p-xylenes
- 143% for o-xylene
- NQ for 4-ethyltoluene
- 96% for 1,3,5-trimethylbenzene
- 35% for 1,2,4-trimethylbenzene
- 12% for 1,4-dichlorobenzene

For air samples, the field RPD guideline is $\pm$ 30%. The data are not qualified on the basis of field duplicate results.

IV. Other Qualifications

A. The following results are qualified as estimated (J).

- All TO-15 detected results reported below the CRQL

Detected results reported below the CRQL are considered to be qualitatively acceptable, but quantitatively unreliable due to the uncertainty in analytical precision near the limit of detection.

B. The following detected results are qualified as estimated (J8) due to calibration range exceedance.

- hexane in samples SG02SG001 and SG02SG002

Analytes detected at concentrations exceeding the calibration range are quantitatively unreliable. The samples listed above were appropriately diluted and reanalyzed.

Full Validation Criteria for Samples SG02SG002 and SG25SG006

V. GC/MS Tuning

A. The ion abundance criteria were met for the bromofluorobenzene (BFB) GC/MS performance check. The samples were analyzed within 12 hours of the associated performance check.

VI. Target Compound List (TCL) Identification

A. The relative retention times, mass spectra, and peak identifications of the samples were evaluated. Target compound identification was considered to be correct.

VII. Compound Quantitation and Reported Detection Limits

A. Sample results were recalculated with the proper dilution factors and volumes used to calculate the sample results. The samples were found to be correctly quantitated. The reported detection limits were consistent with TtEMI's required report limits and reflect any dilutions and volumes used.

IX. System Performance

A. The samples were evaluated for reconstructed ion chromatogram (RIC) baseline shifts, extraneous peaks, loss of resolution, and peak tailing. No system degradation was noted.

EPA METHOD 3C ANALYSIS

I. Blank Contamination

A. Due to field blank contamination, the following results are considered nondetected (U2).

- nitrogen in samples SG02SG001, SG02SG002, SG25SG004, SG25SG005, SG25SG006 and SG25SG007
- oxygen in samples SG02SG001, SG02SG002, SG25SG004, SG25SG005, SG25SG006 and SG25SG007

The following analytes were detected in the associated field blanks at the concentrations noted below.

Compound	Blank ID	Concentration, %
nitrogen	SGFBSG005	81
oxygen	SGFBSG005	19

Detected results less than 5x the maximum blank contamination were qualified.

II. Other Qualifications

A. The following results are qualified as estimated (J).

- Carbon dioxide for SGFBSG006 was reported below the TtEMI required report limit (RL)

Detected results reported below the RL are considered to be qualitatively acceptable, but quantitatively unreliable due to the uncertainty in analytical precision near the limit of detection.

B. The following detected results are qualified as estimated (J8) due to calibration range exceedance.

- carbon dioxide in samples SG02SG002, SG25SG004 and SG25SG006
- oxygen in sample SGFBSG005 and SGFBSG006
- methane in sample SG02SG002, SG25SG004, SG25SG005 and SG25SG006

Analytes detected at concentrations exceeding the calibration range are quantitatively unreliable. The samples listed above were not appropriately diluted and reanalyzed.

III. Field Duplicates

A. The following RPDs were obtained for the field duplicate samples SG25SG005 / SG25SG006:

- 40% for oxygen
- 30% for nitrogen
- 5% for methane
- 9% for carbon dioxide

For air samples, the field RPD guideline is ± 30. The data are not qualified on the basis of field duplicate results.

Full Validation Criteria for Samples SG02SG002 and SG25SG006

IV. Compound Quantitation and Reported Detection Limits

A. Sample results were recalculated, with the proper dilution factors and volumes used to calculate the sample results. The samples were found to be correctly quantitated. The reported detection limits were consistent with TtEMI's required report limits and reflect any dilutions and volumes used.

V. System Performance

A. The samples were evaluated for baseline shifts, extraneous peaks, loss of resolution, and peak tailing. No system degradation was noted.

EPA METHOD 25C ANALYSIS

I. Other Qualifications

A. The following detected results are qualified as estimated (J8) due to calibration range exceedance.

- methane in samples SG02SG001, SG02SG002, SG25SG004, SG25SG005, SG25SG006 and SG25SG007

Analytes detected at concentrations exceeding the calibration range are quantitatively unreliable. The samples listed above were not appropriately diluted and reanalyzed.

II. Field Duplicates

A. The following RPDs were obtained for the field duplicate samples SG01SG004 / SG01SG005:

- 6% for methane
- 4% for NMOC

For air samples, the field RPD guideline is ± 30%. The data are not qualified on the basis of field duplicate results.

Full Validation Criteria for Sample SG02SG002 and SG25SG006

III. Compound Quantitation and Reported Detection Limits

A. Sample results were recalculated, with the proper dilution factors and volumes used to calculate the sample results. The samples were found to be correctly quantitated. The reported detection limits were consistent with TtEMI's required report limits and reflect any dilutions and volumes used.

IV. System Performance

A. The samples were evaluated for baseline shifts, extraneous peaks, loss of resolution, and peak tailing. No system degradation was noted.

OVERALL ASSESSMENT OF DATA

I. Method Compliance and Additional Comments

A. Some results reported on the laboratory hardcopy do not match the electronic data deliverable (EDD) due to rounding. The result reported in the EDD for NMOC for SG25SG005 has been corrected to reflect the result reported on the laboratory hardcopy. For sample SG25SG004, oxygen was qualified as "E" in the EDD; however, the hardcopy did not indicate calibration range exceedance for this compound, therefore oxygen has not been flagged (J8) for this sample.

B. Methane values analyzed by method EPA 25C exceeding the calibration range for samples SG02SG001, SG02SG002, SG25SG005, SG25SG006 and SG25SG007 were obtained from EPA Method 3C.

C. Field blanks were used as matrix spike/matrix spike duplicate samples.

II. Usability

A. Due to high surrogate recovery in the TO-15 analyses, detected results for four samples are qualified as estimated. Due to calibration range exceedance, detected hexane results for two samples are qualified as estimated. Due to common laboratory contamination, detected methylene chloride results for six samples and five dilutions; detected acetone results for three samples; and the detected 2-butanone result for one sample are qualified as nondetected. Due to method blank contamination, detected propylene results for three samples are qualified as nondetected. Due to field blank contamination, detected chloromethane results for two samples and four dilutions; detected dichlorodifluoromethane results for three samples; detected hexachlorobutadiene results for five dilutions; the detected hexane result for one sample; and detected toluene results for three samples and three dilutions are qualified as nondetected.

B. Due to calibration range exceedance in the EPA Method 3C analyses, methane results for four samples, carbon dioxide results for three samples, and the oxygen result for one sample are qualified as estimated. Due to field blank contamination, detected nitrogen and oxygen results for six samples are qualified as nondetected.

C. Due to calibration range exceedance in the EPA Method 25C, methane results for six samples are qualified as estimated.

D. Samples SG02SG001, SG02SG002, SG25SG005, SG25SG006 and SG25SG007 were diluted and reanalyzed for the TO-15 analysis due to matrix interference. The re-extracted samples exhibited similar surrogate recovery problems. The original analysis should be used as the final validated result due to better surrogate recovery.

E. The quality control criteria reviewed, other than those discussed above, were met and are considered acceptable. Sample results that were found to be rejected (R) are unusable for all purposes. Sample results that were found to be estimated (J) are usable for limited purposes only. Based upon the cursory and full data validation all other results are considered valid and usable for all purposes. The high number of qualifications made to the data indicate several analytical and/or matrix problems that limit the usability of the data.

DATA VALIDATION REPORT{PRIVATE }

Site: Hunters Point Shipyard, Parcel E
Nonstandard Data Gaps Investigation
Contract Task Order (CTO) No.: DO 003
Laboratory: Atmospheric Analysis & Consulting, Inc.
Data Reviewer: ETHIX
Review Date: 5/16/02

Sample Delivery Group (SDG) No.: HAN07

Sample Nos.:				
	SG01SG003	SG01SG006	SG02SG004	SG01SG006DL
	SG01SG004*	SG01SG007	SGFBSG007	SG01SG007DL
	SG01SG005	SG02SG003	SG01SG006DL	

All samples were received intact and properly labeled.

* Full Validation Sample

Matrix: Air

Collection Date: 4/2/02

The data were qualified according to the U.S. Environmental Protection Agency (EPA) documents "USEPA Contract Laboratory Program National Functional Guidelines for Organic Data Review" (October 1999) and "USEPA Contract Laboratory Program National Functional Guidelines For Inorganic Data Review" (February 1994). In addition, the Tetra Tech EM Inc. (TtEMI) documents "Data Validation Guidelines for CLP Organic Analyses," "Data Validation Guidelines for CLP Inorganic Analyses," "Data Validation Guidelines for Non-CLP Organic Analyses," "Data Validation Guidelines for Non-CLP Inorganic and Physical Analyses" (August 1, 2001), and the document entitled “TtEMI Comprehensive Long-term Environmental Action Navy II Analytical Services Statement of Work” (May 2000) were used along with other specified criteria in EPA methods. Data validation requirements are presented below.

I certify that all data validation criteria outlined in the above referenced documents were assessed, and any qualifications made to the data were in accordance with those documents.

Certified by

DATA VALIDATION REQUIREMENTS

Full validation includes all parameters listed below. Cursory validation parameters are indicated by an asterisk (*).

CLP Organic Parameters

* Holding times
GC/MS instrument performance check
* Initial and continuing calibrations
* Blanks
* Surrogate recovery
* Matrix spike/matrix spike duplicate
* Laboratory control sample or blank spike *
* Field duplicates
* Internal standard performance
Target compound identification
Tentatively identified compounds
Compound quantitation
Reported detection limits
System performance
* Overall assessment of data for the SDG

CLP Inorganic Parameters

* Holding times
* Initial and continuing calibrations
* Blanks
* Matrix spike
* Laboratory control sample or blank spike
Field duplicates
* Matrix duplicates
ICP interference check sample
GFAA quality control
* ICP serial dilution
Sample result verification
Analyte quantitation
Reported detection limits
* Overall assessment of data for the SDG

Non-CLP Organic and Inorganic Parameters

* Method compliance
* Holding times
* Initial and continuing calibrations
* Blanks
* Matrix spike/matrix spike duplicate
* Laboratory control sample or blank spike
* Field duplicates
* Matrix duplicates
* Surrogate recovery
Analyte quantitation
Reported detection limits
* Overall assessment of data for the SDG

DATA VALIDATION QUALIFIERS AND CODES

Data Validation Qualifiers and Codes

U1	Compound is nondetected due to laboratory blank contamination
U2	Compound is nondetected due to field blank contamination
U4	Compound is nondetected because of common laboratory contamination
J0	Compound is estimated due to internal standard exceedance
J1	Compound is estimated due to noncompliant instrument performance criteria
J2	Compound is estimated due to laboratory duplicate precision exceedance
J3	Compound is estimated due to surrogate/LCS/MS exceedance
J4	Compound is estimated due to serial dilution exceedance
J5	Compound is estimated due to holding time exceedance
J6	Compound is estimated due to field duplicate precision exceedance
J7	Compound is estimated due to calibration exceedance
J8	Compound is estimated due to calibration range exceedance
J9	Compound is estimated due to interference check exceedance (metals) or confirmation problems (dual column analyses)
UJ9	Compound is nondetected and estimated due to confirmation problems (dual column analyses)
R0	Compound is rejected due to internal standard exceedance
R1	Compound is rejected due to holding time exceedance
R2	Compound is rejected due to surrogate/LCS/MS exceedance
R3	Compound is rejected due to noncompliant instrument performance criteria
R7	Compound is rejected due to calibration exceedance

TABLE 1
CURSORY DATA VALIDATION SUMMARY

Analysis{PRIVATE}	Holding Times	Surrogates	MS/MSD	Matrix Duplicates	LCS	Blanks	Calibrations	Internal Standards	Field Duplicates	Other
TO-15	✓	Pg. 6	✓	N/A	✓	Pg. 7	✓	Pg. 8	Pg. 9	Pg. 9
EPA 3C	✓	N/A	✓	N/A	✓	Pg. 11	✓	N/A	Pg. 11	Pg. 11
EPA 25C	✓	N/A	✓	N/A	✓	✓	✓	N/A	Pg. 13	Pg. 13

Notes:
✓ indicates that all quality control criteria were met for the parameter as specified in the prescribed methods and data validation guidelines.
N/A indicates the parameter is not applicable to an analysis.
If criteria were not met and the data were qualified, a page number is indicated where the qualification is detailed.
The data were evaluated for all validation criteria and were found to be in control except where noted. Any outliers are described in the text.

TABLE 2
FULL DATA VALIDATION SUMMARY
Sample SG01SG004

Analysis{PRIVATE }	GC/MS Tuning	Target Compound List Identification	Compound or Analyte Quantification	Reported Detection Limits	Tentatively Identified Compounds	System Performance	Interference Check Sample	Graphite Furnace Quality Control
TO-15	✓	✓	✓	✓	N/A	✓	N/A	N/A
EPA 3C	N/A	N/A	✓	✓	N/A	✓	N/A	N/A
EPA 25C	N/A	N/A	✓	✓	N/A	✓	N/A	N/A

Notes:
✓ indicates that all quality control criteria were met for the parameter as specified in the prescribed methods and data validation guidelines.
N/A indicates the parameter is not applicable to an analysis.
If criteria were not met and the data were qualified, a page number is indicated where the qualification is detailed.
The data were evaluated for all validation criteria and were found to be in control except where noted. Any outliers found are described below.

DATA ASSESSMENT

TO-15 ANALYSIS

I. Surrogate Recovery

A. Due to surrogate recovery problems, the following detected results are qualified as estimated (J3).

- 1,2,4-trimethylbenzene, 1,2-dichloro-1,1,2,2-tetrafluoroethane, 1,3,5-trimethylbenzene,2-butanone, 4-ethyltoluene, acetone, benzene, carbon disulfide, chloroethane, chloromethane, cyclohexane, dichlorodifluoromethane, ethylbenzene, heptane, hexane, m,p-xylenes, o-xylene, propylene, toluene, trichloroethene and vinyl chloride in samples SG01SG003, SG01SG005, SG01SG006, SG01SG006DL and SG01SG006DL
- 1,1,2-trichloro-1,2,2-trifluoroethane, 1,2-dichloroethane and ethanol in samples SG01SG003, SG01SG006, SG01SG006DL and SG01SG006DL2
- 1,4-dichlorobenzene, styrene and tetrachloroethylene in samples SG01SG003, SG01SG005, SG01SG006DL and SG01SG006DL2
- 1,2-dichlorobenzene, cis-1,2-dichloroethene in samples SG01SG003, SG01SG005 and SG01SG006DL2
- bromomethane in samples SG01SG003, SG01SG006 and SG01SG006DL2
- methylene chloride in samples SG01SG005, SG01SG006DL and SG01SG006DL2
- 1,1-dichloroethane in samples SG01SG006 and SG01SG006DL2
- 1,1-dichloroethylene, 1,2-dibromomethane, 1,3-butadiene and t-1,3-dichloropropene in samples SG01SG006DL and SG01SG006DL2
- 1,3-dichlorobenzene in samples SG01SG003 and SG01SG005
- t-1,2-dichloroethylene and trichlorofluoromethane in samples SG01SG003 and SG01SG006DL
- tetrahydrofuran in samples SG01SG003 and SG01SG006DL2
- 1,1,1-trichloroethane and bromoform in sample SG01SG003
- MTBE in sample SG01SG006
- cis-1,3-dichloropropene in sample SG01SG006DL
- 1,2,4-trichlorobenzene, chloroform and hexachlorobutadiene in sample SG01SG006DL2
- carbon tetrachloride in sample SG01SG006DL

The surrogates outside of QC limits are listed below.

Sample ID	Surrogate	% R	QC Limits
SG01SG003	4-bromofluorobenzene	129	75-125
SG01SG005	4-bromofluorobenzene	134	75-125
SG01SG006	4-bromofluorobenzene	286	75-125
SG01SG006DL	4-bromofluorobenzene	383	75-125
SG01SG006DL2	4-bromofluorobenzene	190	75-125

High percent recoveries indicate that detected results may be biased high.

II. Blank Contamination

A. Due to common laboratory contamination, the following results are considered nondetected (U4).

- acetone in sample SG01SG007DL
- methylene chloride in samples SG01SG005, SG01SG006DL, SG01SG006DL2, SG01SG007, SG01SG007DL, SG02SG003 and SGFBSG007
- 2-butanone in samples SG01SG006DL2, SG01SG007DL, SG02SG003, SG02SG004 and SGFBSG007

Acetone, methylene chloride, and 2-butanone are considered common laboratory contaminants when found at levels less than 5x the CRQL in environmental samples and not found in the associated blanks.

B. Due to method blank contamination, the following results are considered nondetected (U1).

- propylene in sample SGFBSG007

The following compounds were detected in the associated method blanks at the concentrations noted below.

Compound	Blank ID	Concentration, ppbv
Propylene	MBA040702-1	0.86

Detected results less than 5x the blank contamination were qualified.

C. Due to field blank contamination, the following results are considered nondetected (U2).

- acetone in samples SG02SG004, SG01SG007 and SG02SG003
- benzene in samples SG01SG007DL, SG02SG003 and SG02SG004
- chloromethane in sample SG02SG003
- dichlorodifluoromethane in sample SG02SG003
- ethanol in samples SG01SG006, SG01SG006DL, SG01SG007, SG02SG003 and SG02SG004
- hexane in samples SG01SG007 and SG02SG003
- m,p-xylenes in samples SG02SG003 and SG02SG004
- MTBE in sample SG01SG006
- o-xylene in sample SG02SG003
- propylene in sample SG01SG007
- toluene in samples SG02SG003 and SG02SG004

The following analytes were detected in the associated field blank at the concentrations noted below.

Analyte	Blank ID	Concentration, ppbv
Acetone	SGFBSG007	7.7
Benzene	SGFBSG007	0.91
Chloromethane	SGFBSG007	0.9
Dichlorodifluoromethane	SGFBSG007	0.91
Ethanol	SGFBSG007	4.6
Hexane	SGFBSG007	0.71
m,p-xylenes	SGFBSG007	2.1

MTBE	SGFBSG007	0.8
o-xylene	SGFBSG007	0.9
propylene	SGFBSG007	2.3
toluene	SGFBSG007	2.1

Detected results less than 5x or 10x the maximum blank contamination were qualified.

III. Internal Standards

A. Due to internal standard problems, the following detected and nondetected results are qualified as estimated (J0/UJ0).

- All compounds quantitated using chlorobenzene-d5 in sample SG01SG006

The internal standard area counts in the samples listed above were less than one half of the reference standard and are listed below.

Sample	Internal Standard	Value	QC Limits
SG01SG006	chlorobenzene-d5	1101938	3190776 - 12763102

Internal standard area counts of less than 50% of the standard area count may indicate a loss of instrument sensitivity.

IV. Field Duplicates

A. The following RPDs were obtained for the field duplicate samples SG01SG004 / SG01SG005:

- 13% for propylene
- 76% for dichlorodifluoromethane
- 63% for chloromethane
- 77% for 1,2-dichloro-1,1,2,2-tetrafluoromethane
- 87% for vinyl chloride
- 87% for chloroethane
- NQ for trichlorofluoromethane
- 30% for acetone
- 182% for methylene chloride
- 54% for carbon disulfide
- 91% for 2-butanone
- 94% for cis-1,2-dichloroethene
- 7% for hexane
- NQ for 1,2-dichloroethane
- 81% for benzene
- NQ for carbon tetrachloride
- NQ for cyclohexane
- 45% for trichloroethene
- 62% for heptane
- 88% for toluene

- 48% for tetrachloroethylene
- 70% for ethylbenzene
- 78% for m,p-xylenes
- 91% for styrene
- 79% for o-xylene
- 63% for 4-ethyltoluene
- 65% for 1,3,5-trimethylbenzene
- 35% for 1,2,4-trimethylbenzene
- 61% for 1,3-dichlorobenzene
- 89% for 1,4-dichlorobenzene
- 73% for 1,2-dichlorobenzene

For air samples, the field RPD guideline is ± 30%. The data are not qualified on the basis of field duplicate results.

V. Other Qualifications

A. The following results are qualified as estimated (J).

- All TO-15 detected results reported below the CRQL

Detected results reported below the CRQL are considered to be qualitatively acceptable, but quantitatively unreliable due to the uncertainty in analytical precision near the limit of detection.

B. The following detected results are qualified as estimated (J8) due to calibration range exceedance.

- acetone and toluene in sample SG01SG006
- ethylbenzene, m,p-xylenes and o-xylene in samples SG01SG006, SG01SG006DL and SG01SG006DL2

Analytes detected at concentrations exceeding the calibration range are quantitatively unreliable. Samples SG01SG006 and SG01SG006DL were appropriately diluted and reanalyzed.

Full Validation Criteria for Sample SG01SG004

VI. GC/MS Tuning

A. The ion abundance criteria were met for the bromofluorobenzene (BFB) GC/MS performance check. The sample wass analyzed within 12 hours of the associated performance check.

VII. Target Compound List (TCL) Identification

A. The relative retention times, mass spectra, and peak identifications of the sample were evaluated. Target compound identification was considered to be correct.

VIII. Compound Quantitation and Reported Detection Limits

A. Sample results were recalculated with the proper dilution factors and volumes used to calculate the sample results. The sample was found to be correctly quantitated. The reported detection limits were consistent with TtEMI's required report limits and reflect any dilutions and volumes used.

IX. System Performance

A. The sample was evaluated for reconstructed ion chromatogram (RIC) baseline shifts, extraneous peaks, loss of resolution, and peak tailing. No system degradation was noted.

EPA METHOD 3C ANALYSIS

I. Blank Contamination

A. Due to field blank contamination, the following results are considered nondetected (U2).

- nitrogen in samples SG01SG003, SG01SG004, SG01SG005, SG01SG006, SG01SG007, SG02SG003 and SG02SG004
- oxygen in samples SG01SG003, SG01SG004, SG01SG005, SG01SG006, SG01SG007, SG02SG003 and SG02SG004

The following analytes were detected in the associated field blanks at the concentrations noted below.

Compound	Blank ID	Concentration, %
Nitrogen	SGFBSG007	81
Oxygen	SGFBSG007	19

Detected results less than 5x the maximum blank contamination were qualified.

II. Field Duplicates

A. The following RPDs were obtained for the field duplicate samples SG01SG004 / SG01SG005:

- 79% for oxygen
- 31% for nitrogen
- NQ for methane
- NQ for carbon dioxide

For air samples, the field RPD guideline is $\pm$ 30. The data are not qualified on the basis of field duplicate results.

III. Other Qualifications

A. The following detected results are qualified as estimated (J8) due to calibration range exceedance.

- carbon dioxide in sample SG01SG003
- oxygen in samples SG02SG003 and SGFBSG007

Analytes detected at concentrations exceeding the calibration range are quantitatively unreliable. The samples listed above were not appropriately diluted and reanalyzed.

Full Validation Criteria for Sample SG01SG004

IV. Compound Quantitation and Reported Detection Limits

A. Sample results were recalculated, with the proper dilution factors and volumes used to calculate the sample results. The sample was found to be correctly quantitated. The reported detection limits were consistent with TtEMI's required report limits and reflect any dilutions and volumes used.

V. System Performance

A. The sample was evaluated for baseline shifts, extraneous peaks, loss of resolution, and peak tailing. No system degradation was noted.

EPA METHOD 25C ANALYSIS

I. Field Duplicates

A. The following RPDs were obtained for the field duplicate samples SG01SG004 / SG01SG005:

- 53% for methane
- 39% for NMOC

For air samples, the field RPD guideline is ± 30%. The data are not qualified on the basis of field duplicate results.

II. Other Qualifications

A. The following detected results are qualified as estimated (J8) due to calibration range exceedance.

- methane in samples SG01SG003, SG01SG004, SG01SG005, SG01SG006 and SG01SG007

Analytes detected at concentrations exceeding the calibration range are quantitatively unreliable. The samples listed above were not appropriately diluted and reanalyzed.

Full Validation Criteria for Sample SG01SG004

III. Compound Quantitation and Reported Detection Limits

A. Sample results were recalculated, with the proper dilution factors and volumes used to calculate the sample results. The sample was found to be correctly quantitated. The reported detection limits were consistent with TtEMI's required report limits and reflect any dilutions and volumes used.

IV. System Performance

A. The sample was evaluated for baseline shifts, extraneous peaks, loss of resolution, and peak tailing. No system degradation was noted.

OVERALL ASSESSMENT OF DATA

I. Method Compliance and Additional Comments

A. Some results reported on the laboratory hardcopy do not match the electronic data deliverable (EDD) due to rounding. Results reported in the EDD for carbon dioxide, methane, nitrogen and oxygen for SG01SG004 have been hand-corrected to reflect results reported on the laboratory hardcopy. For sample SG01SG003, carbon dioxide was qualified as "E" in the EDD; however, calibration range exceedance for this compound was not indicated on the laboratory hardcopy.

B. Methane values analyzed by method EPA 25C exceeding the calibration range for samples SG01SG003, SG01SG004, SG01SG005, SG01SG006 and SG1SG007 were obtained from EPA Method 3C.

C. The field blanks for TO-15 and EPA 3C were used as matrix spike/matrix spike duplicate samples, which is a protocol violation.

II. Usability

A. Due to high surrogate recovery in the TO-15 analyses, detected results for the original analysis of three samples and two reanalyses of one sample were qualified as estimated. Due to calibration range exceedance, ethylbenzene, m,p-xylenes and o-xylene results for three samples and acetone and toluene results for one sample are qualified as estimated. Due to common laboratory contamination, detected methylene chloride results for four samples and three dilutions, detected 2-butanone results for two samples and two dilutions, and the detected acetone result for one diluted sample are qualified as nondetected. Due to method blank contamination, the detected propylene result for one sample is qualified as nondetected. Due to field blank contamination, detected ethanol results for four samples and one dilution; detected acetone results for three samples; detected benzene results for two samples and one dilution; detected hexane, m,p-xylenes and toluene results for two samples; detected chloromethane, dichlorodifluoromethane, MTBE and o-xylene results for one sample are qualified as nondetected.

B. Due to field blank contamination in the EPA Method 3C analyses, detected nitrogen and oxygen results for seven samples are qualified as nondetected.

C. Due to calibration range exceedance in the EPA Method 25C, methane results for five samples are qualified as estimated.

D. Sample SG01SG006 (diluted twice) and SG01SG007 were diluted and reanalyzed for the TO-15 analysis due to calibration range exceedance and/or matrix interference. The diluted sample SG01SG006 exhibited similar surrogate recovery problems. Sample SG01SG007 was reanalyzed at a dilution due to matrix interference. The diluted analysis of SG01SG007 should be used as the final validated result.

E. The quality control criteria reviewed, other than those discussed above, were met and are considered acceptable. Sample results that were found to be rejected (R) are unusable for all purposes. Sample results that were found to be estimated (J) are usable for limited purposes only. Based upon the cursory and full data validation all other results are considered valid and usable for all purposes. The

high number of qualifications made to the data indicate several analytical and/or matrix problems that limit the usability of the data.

DATA VALIDATION REPORT{PRIVATE }

Site: Hunters Point Shipyard, Parcel E
Nonstandard Data Gaps Investigation
Contract Task Order (CTO) No.: DO 003
Laboratory: Atmospheric Analysis & Consulting, Inc.
Data Reviewer: ETHIX
Review Date: 5/18/02

Sample Delivery Group (SDG) No.: HAN08

Sample Nos.				
	SG02SG005	SG02SG007DL	SG26SG001	SGFBSG008DL
	SG02SG006	SG03SG001*	SG26SG001DL	
	SG02SG006DL	SG03SG001DL	SG27SG001	
	SG02SG007	SG04SG003*	SGFBSG008	

All samples were received intact and properly labeled.

* Full Validation Sample

Matrix: Air

Collection Dates: 4/2/02 and 4/3/02

The data were qualified according to the U.S. Environmental Protection Agency (EPA) documents "USEPA Contract Laboratory Program National Functional Guidelines for Organic Data Review" (October 1999) and "USEPA Contract Laboratory Program National Functional Guidelines For Inorganic Data Review" (February 1994). In addition, the Tetra Tech EM Inc. (TtEMI) documents "Data Validation Guidelines for CLP Organic Analyses," "Data Validation Guidelines for CLP Inorganic Analyses," "Data Validation Guidelines for Non-CLP Organic Analyses," "Data Validation Guidelines for Non-CLP Inorganic and Physical Analyses" (August 1, 2001), and the document entitled “TtEMI Comprehensive Long-term Environmental Action Navy II Analytical Services Statement of Work” (May 2000) were used along with other specified criteria in EPA methods. Data validation requirements are presented below.

I certify that all data validation criteria outlined in the above referenced documents were assessed, and any qualifications made to the data were in accordance with those documents.

Certified by

DATA VALIDATION REQUIREMENTS

Full validation includes all parameters listed below. Cursory validation parameters are indicated by an asterisk (*).

CLP Organic Parameters

* Holding times
  GC/MS instrument performance check
* Initial and continuing calibrations
* Blanks
* Surrogate recovery
* Matrix spike/matrix spike duplicate
* Laboratory control sample or blank spike *
* Field duplicates
* Internal standard performance
  Target compound identification
  Tentatively identified compounds
  Compound quantitation
  Reported detection limits
  System performance
* Overall assessment of data for the SDG

CLP Inorganic Parameters

* Holding times
* Initial and continuing calibrations
* Blanks
* Matrix spike
* Laboratory control sample or blank spike
  Field duplicates
* Matrix duplicates
  ICP interference check sample
  GFAA quality control
* ICP serial dilution
  Sample result verification
  Analyte quantitation
  Reported detection limits
* Overall assessment of data for the SDG

Non-CLP Organic and Inorganic Parameters

* Method compliance
* Holding times
* Initial and continuing calibrations
* Blanks
* Matrix spike/matrix spike duplicate
* Laboratory control sample or blank spike
* Field duplicates
* Matrix duplicates
* Surrogate recovery
  Analyte quantitation
  Reported detection limits
* Overall assessment of data for the SDG

DATA VALIDATION QUALIFIERS AND CODES

Data Validation Qualifiers and Codes

U1	Compound is nondetected due to laboratory blank contamination
U2	Compound is nondetected due to field blank contamination
U4	Compound is nondetected because of common laboratory contamination
J0	Compound is estimated due to internal standard exceedance
J1	Compound is estimated due to noncompliant instrument performance criteria
J2	Compound is estimated due to laboratory duplicate precision exceedance
J3	Compound is estimated due to surrogate/LCS/MS exceedance
J4	Compound is estimated due to serial dilution exceedance
J5	Compound is estimated due to holding time exceedance
J6	Compound is estimated due to field duplicate precision exceedance
J7	Compound is estimated due to calibration exceedance
J8	Compound is estimated due to calibration range exceedance
J9	Compound is estimated due to interference check exceedance (metals) or confirmation problems (dual column analyses)
UJ9	Compound is nondetected and estimated due to confirmation problems (dual column analyses)
R0	Compound is rejected due to internal standard exceedance
R1	Compound is rejected due to holding time exceedance
R2	Compound is rejected due to surrogate/LCS/MS exceedance
R3	Compound is rejected due to noncompliant instrument performance criteria
R7	Compound is rejected due to calibration exceedance

TABLE 1
CURSORY DATA VALIDATION SUMMARY

Analysis{PRIVATE}	Holding Times	Surrogates	MS/MSD	Matrix Duplicates	LCS	Blanks	Calibrations	Internal Standards	Field Duplicates	Other
TO-15	✓	Pg. 6	✓	N/A	✓	Pg. 7	✓	✓	Pg. 8	Pg. 9
EPA 3C	✓	N/A	✓	N/A	✓	Pg. 10	✓	N/A	Pg. 10	Pg. 11
EPA 25C	✓	N/A	✓	N/A	✓	Pg. 12	✓	N/A	Pg. 12	Pg. 12

Notes:
✓ indicates that all quality control criteria were met for the parameter as specified in the prescribed methods and data validation guidelines.
N/A indicates the parameter is not applicable to an analysis.
If criteria were not met and the data were qualified, a page number is indicated where the qualification is detailed.
The data were evaluated for all validation criteria and were found to be in control except where noted. Any outliers are described in the text.

TABLE 2
FULL DATA VALIDATION SUMMARY
Samples SG03SG001 and SG04SG003

Analysis{PRIVATE }	GC/MS Tuning	Target Compound List Identification	Compound or Analyte Quantification	Reported Detection Limits	Tentatively Identified Compounds	System Performance	Interference Check Sample	Graphite Furnace Quality Control
TO-15	✓	✓	✓	✓	N/A	✓	N/A	N/A
EPA 3C	N/A	N/A	✓	✓	N/A	✓	N/A	N/A
EPA 25C	N/A	N/A	✓	✓	N/A	✓	N/A	N/A

Notes:
✓ indicates that all quality control criteria were met for the parameter as specified in the prescribed methods and data validation guidelines.
N/A indicates the parameter is not applicable to an analysis.
If criteria were not met and the data were qualified, a page number is indicated where the qualification is detailed.
The data were evaluated for all validation criteria and were found to be in control except where noted. Any outliers found are described below.

DATA ASSESSMENT

TO-15 ANALYSIS

I. Surrogate Recovery

A. Due to surrogate recovery problems, the following detected results are qualified as estimated (J3).

- 1,2,4-trimethylbenzene, 1,2-dichloro-1,1,2,2-tetrafluoroethane, 1,3,5-trimethylbenzene, 1,4-dichlorobenzene, 4-ethyltoluene, benzene, carbon disulfide, chloroethane, cis-1,2-dichloroethene, cyclohexane, dichlorodifluoromethane, ethylbenzene, heptane, hexane, m,p-xylenes, methylene chloride, o-xylene, propylene, toluene, trichloroethene and vinyl chloride in samples SG02SG006, SG02SG006DL, SG02SG007, SG02SG007DL, SG03SG001, SG03SG001DL and SG26SG001

- acetone in samples SG02SG006, SG02SG006DL, SG02SG007, SG02SG007DL, SG03SG001DL and SG26SG001

- styrene and tetrachloroethylene in samples SG02SG006, SG02SG006DL, SG02SG007, SG02SG007DL, SG03SG001 and SG26SG001

- 1,2-dichloroethane in samples SG02SG006, SG02SG006DL, SG02SG007, SG02SG007DL, SG03SG001 and SG26SG001

- 1,2-dichlorobenzene in samples SG02SG006, SG02SG006DL, SG03SG001, SG03SG001DL and SG26SG001

- ethanol in samples SG02SG006DL, SG02SG007, SG02SG007DL, SG03SG001 and SG26SG001

- 2-butanone in samples SG02SG006, SG02SG007, SG02SG007DL and SG26SG001

- 1,3-dichlorobenzene in samples SG02SG006, SG02SG006DL and SG03SG001

- 1,1-dichloroethane in samples SG02SG006DL, SG02SG007 and SG26SG001

- chloromethane in samples SG02SG006DL, SG02SG007DL and SG26SG001

- 1,1,2-trichloro-1,2,2-trifluoroethane in samples SG02SG007 and SG02SG007DL

- 1,1-dichloroethylene in samples SG02SG007 and SG03SG001

- 1,2,4-trichlorobenzene in samples SG02SG006 and SG26SG001

- 4-methyl-2-pentanone(MIBK) in samples SG02SG006DL and SG03SG001DL

- t-1,2-dichloroethylene in samples SG03SG001 and SG26SG001

- bromomethane in sample SG02SG006DL
- 1,3-butadiene in sample SG26SG001
- chloroform and isopropyl alcohol in sample SG02SG006
- tetrahydrofuran in sample SG26SG001

The surrogates outside of QC limits are listed below.

Sample ID	Surrogate	% R	QC Limits
SG02SG006	4-bromofluorobenzene	154	75-125
SG02SG006DL	4-bromofluorobenzene	129	75-125
SG02SG007	4-bromofluorobenzene	215	75-125
SG02SG007DL	4-bromofluorobenzene	139	75-125
SG03SG001	4-bromofluorobenzene	155	75-125
SG03SG001DL	4-bromofluorobenzene	133	75-125
SG26SG001	4-bromofluorobenzene	147	75-125

High percent recoveries indicate that detected results may be biased high.

II. Blank Contamination

A. Due to common laboratory contamination, the following results are considered nondetected (U4).

- acetone in samples SG27SG001 and SGFBSG008
- methylene chloride in samples SG02SG005, SG02SG006, SG02SG006DL, SG03SG001, SG04SG003, SG26SG001DL, SG27SG001 and SGFBSG008
- 2-butanone in samples SG02SG005, SG02SG007DL, SG04SG003 and SG26SG001DL

Acetone, methylene chloride and 2-butanone are considered common laboratory contaminants when found at levels less than 5x the CRQL in environmental samples and not found in the associated blanks.

B. Due to method blank contamination, the following results are considered nondetected (U1).

- propylene in samples SG27SG001 and SGFBSG008

The following compound was detected in the associated method blank at the concentrations noted below.

Compound	Blank ID	Concentration, ppbv
propylene	MBA040702-1	0.86

Detected results less than 5x the blank contamination were qualified.

C. Due to field blank contamination, the following results are considered nondetected (U2).

- 1,2,4-trimethylbenzene in samples SG04SG003 and SG27SG001
- m,p-xylenes in samples SG02SG005 and SG04SG003
- methylene chloride in sample SG26SG001

The following analytes were detected in the associated field blank at the concentrations noted below.

Analyte	Blank ID	Concentration, ppbv
1,2,4-trimethylbenzene	SGFBSG008	1.11
m,p-xylenes	SGFBSG008	2.16
methylene chloride	SGFBSG008	1.52

Detected results less than 5x the maximum blank contamination were qualified.

III. Field Duplicates

A. The following RPDs were obtained for the field duplicate samples SG04SG003 / SG04SG004:

- 157% for propylene
- 105% for dichlorodifluoromethane
- 150% for chloromethane
- 125% for 1,2-dichloro-1,1,2,2-tetrafluoromethane
- 130% for vinyl chloride
- 132% for chloroethane
- NQ for acetone
- 115% for methylene chloride
- NQ for carbon disulfide
- NQ for 1,1,2-trichloro-1,2,2-trifluoroethane
- NQ for t-1,2-dichloroethylene
- 140% for 1,1-dichloroethane
- 47% for 2-butanone
- 144% for cis-1,2-dichloroethene
- 120% for hexane
- NQ for 1,2-dichloroethane
- 126% for benzene
- 129% for cyclohexane
- 64% for trichloroethene
- 56% for heptane
- 153% for toluene
- 15% for tetrachloroethylene
- 47% for ethylbenzene
- 51% for m,p-xylenes
- NQ for styrene
- 91% for o-xylene
- 28% for 1,2,4-trimethylbenzene
- NQ for 1,2,4-trichlorobenzene

For air samples, the field RPD guideline is $\pm$ 30%. The data are not qualified on the basis of field duplicate results.

IV. Other Qualifications

A. The following results are qualified as estimated (J).

- All TO-15 detected results reported below the CRQL

Detected results reported below the CRQL are considered to be qualitatively acceptable, but quantitatively unreliable due to the uncertainty in analytical precision near the limit of detection.

Full Validation Criteria for Samples SG03SG001 and SG04SG003

V. GC/MS Tuning

A. The ion abundance criteria were met for the bromofluorobenzene (BFB) GC/MS performance check. The samples were analyzed within 12 hours of the associated performance check.

VI. Target Compound List (TCL) Identification

A. The relative retention times, mass spectra, and peak identifications of the samples were evaluated. Target compound identification was considered to be correct.

VII. Compound Quantitation and Reported Detection Limits

A. Sample results were recalculated with the proper dilution factors and volumes used to calculate the sample results. The samples were found to be correctly quantitated. The reported detection limits were consistent with TtEMI's required report limits and reflect any dilutions and volumes.

VIII. System Performance

A. The samples were evaluated for reconstructed ion chromatogram (RIC) baseline shifts, extraneous peaks, loss of resolution, and peak tailing. No system degradation was noted.

EPA METHOD 3C ANALYSIS

I. Blank Contamination

A. Due to field blank contamination, the following results are considered nondetected (U2).

- nitrogen and oxygen in samples SG02SG005, SG02SG006, SG02SG007, SG03SG001, SG04SG003 and SG26SG001
- nitrogen in SG27SG001

The following analytes were detected in the associated field blanks at the concentrations noted below.

Compound	Blank ID	Concentration, %
nitrogen	SGFBSG008	80.44
oxygen	SGFBSG008	19.07

Detected results less than 5x the maximum blank contamination were qualified.

II. Calibrations

A. Due to a continuing calibration problem, the following detected results are qualified as estimated (J7).

- nitrogen in samples SGFBSG008, SG27SG001 and SG04SG003

The following continuing calibration had a percent differences (%D) of >20%.

Calibration Date	Compound	%D
4/11/02 8:05	nitrogen	23.3

III. Field Duplicates

A. The following RPDs were obtained for the field duplicate samples SG04SG003 / SG04SG004:

- 83% for oxygen
- 89% for nitrogen
- 123% for methane
- 123% for carbon dioxide

For air samples, the field RPD guideline is ± 30. The data are not qualified on the basis of field duplicate results.

IV. Other Qualifications

A. The following results are qualified as estimated (J).

- All detected carbon dioxide and methane results reported below the CRQL

Detected results reported below the CRQL are considered to be qualitatively acceptable, but quantitatively unreliable due to the uncertainty in analytical precision near the limit of detection.

B. The following detected results are qualified as estimated (J8) due to calibration range exceedance.

- carbon dioxide in sample SG03SG001
- methane in samples SG02SG006, SG03SG001 and SG04SG003
- oxygen in sample SGFBSG008

Analytes detected at concentrations exceeding the calibration range are quantitatively unreliable. Sample SGFBSG001 was appropriately diluted and reanalyzed.

Full Validation Criteria for Samples SG03SG001 and SG04SG003

V. Compound Quantitation and Reported Detection Limits

A. Sample results were recalculated, with the proper dilution factors and volumes used to calculate the sample results. The samples were found to be correctly quantitated. The reported detection limits were consistent with TtEMI's required report limits and reflect any dilutions and volumes.

VI. System Performance

A. The samples were evaluated for baseline shifts, extraneous peaks, loss of resolution, and peak tailing. No system degradation was noted.

EPA METHOD 25C ANALYSIS

I. Blank Contamination

A. Due to field blank contamination, the following results are considered nondetected (U2).

- methane in sample SG27SG001

The following analyte was detected in the associated field blanks at the concentrations noted below.

Compound	Blank ID	Concentration, ppmv
methane	SGFBSG008	254

Detected results less than 5x the maximum blank contamination were qualified.

II. Field Duplicates

A. The following RPDs were obtained for the field duplicate samples SG04SG003 / SG04SG004:

- 120% for methane
- 119% for NMOC

For air samples, the field RPD guideline is ± 30%. The data are not qualified on the basis of field duplicate results.

III. Other Qualifications

A. The following detected results are qualified as estimated (J8) due to calibration range exceedance.

- methane in samples SG02SG005, SG02SG006, SG02SG007, SG03SG001, SG04SG003 and SG26SG001

Analytes detected at concentrations exceeding the calibration range are quantitatively unreliable. The samples listed above were not appropriately diluted and reanalyzed.

Full Validation Criteria for Samples SG03SG001 and SG04SG003

IV. Compound Quantitation and Reported Detection Limits

A. Sample results were recalculated, with the proper dilution factors and volumes used to calculate the sample results. The samples were found to be correctly quantitated. The reported detection limits were consistent with TtEMI's required report limits and reflect any dilutions and volumes.

V. System Performance

A. The samples were evaluated for baseline shifts, extraneous peaks, loss of resolution, and peak tailing. No system degradation was noted.

OVERALL ASSESSMENT OF DATA

I. Method Compliance and Additional Comments

A. Some results reported on the laboratory hardcopy do not match the electronic data deliverable (EDD) due to rounding. In addition, all nondetected results for TO-15 analyses reporting limits in the EDD do not match the laboratory hardcopy. The reporting limits in the EDD for sample SGFBSG008DL for EPA 3C analysis, and bromoform and styrene reporting limits in sample SGFBSG008 for TO-15 analysis do not match the laboratory hardcopy. The surrogate recovery reported in the EDD for samples SG03SG005 and SG03SG005DL for TO-15 analysis does not match the laboratory hardcopy.

B. Methane values exceeding the calibration range for samples SG02SG005, SG02SG006, SG02SG007, SG03SG001, SG04SG003 and SG26SG001 were obtained from EPA Method 3C.

C. The field blank was used as a matrix spike/matrix spike duplicate sample.

II. Usability

A. Due to high surrogate recovery in the TO-15 analyses, detected results in four samples and three dilutions are qualified as estimated. Due to common laboratory contamination, detected methylene chloride results for five samples and three dilutions; detected 2-butanone results for two samples and two dilutions; and detected acetone results for two samples are qualified as nondetected. Due to laboratory blank contamination, detected propylene results for two samples are qualified as nondetected. Due to field blank contamination, detected 1,2,4-trimethylbenzene results for two samples; detected m,p-xylenes results for two samples; and the detected methylene chloride result for one sample are qualified as nondetected.

B. Due to calibration problems in the EPA Method 3C analyses, detected nitrogen results for three samples are qualified as estimated. Due to calibration range exceedance, detected methane results for three samples, and carbon dioxide and oxygen results for one sample are qualified as estimated. Due to field blank contamination detected nitrogen results for seven samples and oxygen results for six samples are qualified as nondetected.

D. Due to calibration range exceedance in the EPA Method 25C, methane results for six samples are qualified as estimated. Due to field blank contamination, the detected methane result for one sample is qualified as nondetected.

E. Samples SG02SG006, SG02SG007, SG003SG001 and SG26SG001 were diluted and reanalyzed for the TO-15 analysis due to matrix interference. The diluted analyses should be used as the final validated results.

F. Sample SGFBSG008 was diluted and reanalyzed for the EPA 3C analysis. Oxygen should be used from the diluted analysis, and all remaining compounds should be used from the original analysis.

G. The quality control criteria reviewed, other than those discussed above, were met and are considered acceptable. Sample results that were found to be rejected (R) are unusable for all purposes. Sample results that were found to be estimated (J) are usable for limited purposes only. Based upon the cursory and full data validation all other results are considered valid and usable for all purposes. The

high number of qualifications made to the data indicate several analytical and/or matrix problems that limit the usability of the data.

DATA VALIDATION REPORT{PRIVATE }

Site:	Hunters Point Shipyard, Parcel E Nonstandard Data Gaps Investigation
Contract Task Order (CTO) No.: DO 003	
Laboratory:	Atmospheric Analysis & Consulting, Inc.
Data Reviewer:	ETHIX
Review Date:	5/18/02

Sample Delivery Group (SDG) No.: HAN09

Sample Nos.	SG02SG008*	SG03SG002	SG03SG006	SG21SG002
	SG02SG008DL	SG03SG002DL	SG03SG006DL	SGFBSG009
	SG02SG009	SG03SG005	SG21SG001	SGFBSG009DL
	SG02SG009DL	SG03SG005DL	SG21SG001DL	

All samples were received intact and properly labeled.

* Full Validation Sample

Matrix: Air

Collection Dates: 4/2/02 and 4/4/02

The data were qualified according to the U.S. Environmental Protection Agency (EPA) documents "USEPA Contract Laboratory Program National Functional Guidelines for Organic Data Review" (October 1999) and "USEPA Contract Laboratory Program National Functional Guidelines For Inorganic Data Review" (February 1994). In addition, the Tetra Tech EM Inc. (TtEMI) documents "Data Validation Guidelines for CLP Organic Analyses," "Data Validation Guidelines for CLP Inorganic Analyses," "Data Validation Guidelines for Non-CLP Organic Analyses," "Data Validation Guidelines for Non-CLP Inorganic and Physical Analyses" (August 1, 2001), and the document entitled “TtEMI Comprehensive Long-term Environmental Action Navy II Analytical Services Statement of Work” (May 2000) were used along with other specified criteria in EPA methods. Data validation requirements are presented below.

I certify that all data validation criteria outlined in the above referenced documents were assessed, and any qualifications made to the data were in accordance with those documents.

Certified by

DATA VALIDATION REQUIREMENTS

Full validation includes all parameters listed below. Cursory validation parameters are indicated by an asterisk (*).

CLP Organic Parameters

* Holding times
  GC/MS instrument performance check
* Initial and continuing calibrations
* Blanks
* Surrogate recovery
* Matrix spike/matrix spike duplicate
* Laboratory control sample or blank spike *
* Field duplicates
* Internal standard performance
  Target compound identification
  Tentatively identified compounds
  Compound quantitation
  Reported detection limits
  System performance
* Overall assessment of data for the SDG

CLP Inorganic Parameters

* Holding times
* Initial and continuing calibrations
* Blanks
* Matrix spike
* Laboratory control sample or blank spike
Field duplicates
* Matrix duplicates
  ICP interference check sample
  GFAA quality control
* ICP serial dilution
  Sample result verification
  Analyte quantitation
  Reported detection limits
* Overall assessment of data for the SDG

Non-CLP Organic and Inorganic Parameters

* Method compliance
* Holding times
* Initial and continuing calibrations
* Blanks
* Matrix spike/matrix spike duplicate
* Laboratory control sample or blank spike
* Field duplicates
* Matrix duplicates
* Surrogate recovery
  Analyte quantitation
  Reported detection limits
* Overall assessment of data for the SDG

DATA VALIDATION QUALIFIERS AND CODES

Data Validation Qualifiers and Codes

U1	Compound is nondetected due to laboratory blank contamination
U2	Compound is nondetected due to field blank contamination
U4	Compound is nondetected because of common laboratory contamination
J0	Compound is estimated due to internal standard exceedance
J1	Compound is estimated due to noncompliant instrument performance criteria
J2	Compound is estimated due to laboratory duplicate precision exceedance
J3	Compound is estimated due to surrogate/LCS/MS exceedance
J4	Compound is estimated due to serial dilution exceedance
J5	Compound is estimated due to holding time exceedance
J6	Compound is estimated due to field duplicate precision exceedance
J7	Compound is estimated due to calibration exceedance
J8	Compound is estimated due to calibration range exceedance
J9	Compound is estimated due to interference check exceedance (metals) or confirmation problems (dual column analyses)
UJ9	Compound is nondetected and estimated due to confirmation problems (dual column analyses)
R0	Compound is rejected due to internal standard exceedance
R1	Compound is rejected due to holding time exceedance
R2	Compound is rejected due to surrogate/LCS/MS exceedance
R3	Compound is rejected due to noncompliant instrument performance criteria
R7	Compound is rejected due to calibration exceedance

TABLE 1
CURSORY DATA VALIDATION SUMMARY

Analysis{PRIVATE}	Holding Times	Surrogates	MS/MSD	Matrix Duplicates	LCS	Blanks	Calibrations	Internal Standards	Field Duplicates	Other
TO-15	✓	Pg. 6	✓	N/A	✓	Pg. 7	✓	Pg. 8	Pg. 8	Pg. 8
EPA 3C	✓	N/A	✓	N/A	✓	Pg. 11	Pg. 11	N/A	Pg. 11	Pg. 12
EPA 25C	✓	N/A	✓	N/A	✓	✓	✓	N/A	Pg. 13	Pg. 13

Notes:
✓ indicates that all quality control criteria were met for the parameter as specified in the prescribed methods and data validation guidelines.
N/A indicates the parameter is not applicable to an analysis.
If criteria were not met and the data were qualified, a page number is indicated where the qualification is detailed.
The data were evaluated for all validation criteria and were found to be in control except where noted. Any outliers are described in the text.

TABLE 2
FULL DATA VALIDATION SUMMARY
Sample SG02SG008

Analysis{PRIVATE }	GC/MS Tuning	Target Compound List Identification	Compound or Analyte Quantification	Reported Detection Limits	Tentatively Identified Compounds	System Performance	Interference Check Sample	Graphite Furnace Quality Control
TO-15	✓	✓	✓	✓	✓	✓	N/A	N/A
EPA 3C	N/A	N/A	✓	✓	N/A	✓	N/A	N/A
EPA 25C	N/A	N/A	✓	✓	N/A	✓	N/A	N/A

Notes:
✓ indicates that all quality control criteria were met for the parameter as specified in the prescribed methods and data validation guidelines.
N/A indicates the parameter is not applicable to an analysis.
If criteria were not met and the data were qualified, a page number is indicated where the qualification is detailed.
The data were evaluated for all validation criteria and were found to be in control except where noted. Any outliers found are described below.

DATA ASSESSMENT

TO-15 ANALYSIS

I. Surrogate Recovery

A. Due to surrogate recovery problems, the following detected results are qualified as estimated (J3).

- 1,2-dichloro-1,1,2,2-tetrafluoroethane, 1,3,5-trimethylbenzene, 1,4-dichlorobenzene, benzene, chloroethane, cis-1,2-dichloroethene, cyclohexane, dichlorodifluoromethane, heptane, hexane, m,p-xylenes, methylene chloride, propylene, t-1,2-dichloroethylene, toluene, trichloroethene and vinyl chloride in samples SG02SG008, SG02SG008DL, SG02SG009, SG02SG009DL, SG03SG002, SG03SG002DL, SG03SG005, SG03SG005DL, SG03SG006, SG03SG006DL

- 1,1-dichloroethane and chlorobenzene in samples SG02SG008, SG02SG009, SG02SG009DL, SG03SG005, SG03SG005DL, SG03SG006, SG03SG006DL

- 1,1-dichloroethylene, 1,2-dibromomethane, 4-ethyltoluene, bromoform, styrene and t-1,3-dichloropropene in samples SG03SG002 and SG03SG002DL

- 1,2,4-trimethylbenzene in samples SG02SG008, SG02SG008DL, SG02SG009, SG02SG009DL, SG03SG002, SG03SG002DL, SG03SG006 and SG03SG006DL

- 1,2-dichlorobenzene in samples SG02SG008, SG02SG009, SG03SG002, SG03SG002DL, SG03SG005, SG03SG005DL, SG03SG006 and SG03SG006DL

- ethylbenzene in samples SG02SG008, SG02SG008DL, SG02SG009, SG02SG009DL, SG03SG002, SG03SG002DL, SG03SG005DL, SG03SG006 and SG03SG006DL

- 1,3-dichlorobenzene in samples SG02SG008, SG03SG002, SG03SG002DL, SG03SG005, SG03SG005DL, SG03SG006 and SG03SG006DL

- hexachlorobutadiene in samples SG02SG008, SG02SG008DL, SG03SG002, SG03SG002DL, SG03SG006 and SG03SG006DL

- o-xylene and tetrachloroethylene in samples SG02SG008, SG02SG008DL, SG02SG009, SG02SG009DL, SG03SG002 and SG03SG002DL

- carbon disulfide in samples SG02SG008, SG03SG002, SG03SG002DL, SG03SG006, SG03SG006DL

- 1,2-dichloroethane in samples SG02SG009, SG02SG009DL, SG03SG005 and SG03SG005DL

- 1,2,4-trichlorobenzene in samples SG03SG002, SG03SG002DL, SG03SG006 and SG03SG006DL

- 2-butanone (mek) in sample SG03SG006DL
- bromomethane in sample SG03SG005

The surrogates outside of QC limits are listed below.

Sample ID	Surrogate	% R	QC Limits
SG02SG008	4-bromofluorobenzene	408	75-125
SG02SG008DL	4-bromofluorobenzene	152	75-125
SG02SG009	4-bromofluorobenzene	367	75-125
SG02SG009DL	4-bromofluorobenzene	174	75-125
SG03SG002	4-bromofluorobenzene	153	75-125
SG03SG002DL	4-bromofluorobenzene	128	75-125
SG03SG005	4-bromofluorobenzene	198	75-125
SG03SG005DL	4-bromofluorobenzene	132	75-125
SG03SG006	4-bromofluorobenzene	284	75-125
SG03SG006DL	4-bromofluorobenzene	137	75-125

High percent recoveries indicate that detected results may be biased high.

II. Blank Contamination

A. Due to common laboratory contamination, the following results are considered nondetected (U4).

- methylene chloride in samples SG02SG008, SG02SG008DL, SG02SG009, SG02SG009DL, SG03SG002, SG03SG002DL, SG03SG005, SG03SG005DL, SG03SG006, SG03SG006DL, SG21SG001, SG21SG002 and SGFBSG009
- 2-butanone in samples SG03SG006DL and SG21SG001

Methylene chloride and 2-butanone are considered common laboratory contaminants when found at levels less than 5x the CRQL in environmental samples and not found in the associated blanks.

B. Due to field blank contamination, the following results are considered nondetected (U2).

- chloromethane and dichlorodifluoromethane in sample SG21SG001
- hexachlorobutadiene in samples SG02SG008, SG02SG008DL, SG03SG002, SG03SG006, SG03SG006DL, SG21SG001 and SG21SG002
- toluene in samples SG02SG008, SG02SG008DL, SG02SG009, SG02SG009DL, SG03SG005, SG03SG005DL, SG03SG006 and SG03SG006DL

The following analytes were detected in the associated field blank at the concentrations noted below.

Analyte	Blank ID	Concentration, ppbv
chloromethane	SGFBSG009	0.8
dichlorodifluoromethane	SGFBSG009	0.9
hexachlorobutadiene	SGFBSG009	3.4
toluene	SGFBSG009	0.9

Detected results less than 5x the maximum blank contamination were qualified.

III. Internal Standards

A. Due to internal standard problems, the following detected and nondetected results are qualified as estimated (J0/UJ0).

- All compounds quantitated using chlorobenzene-d5 in samples SG02SG008, SG02SG009 and SG03SG006

The internal standard area counts in the samples listed above were less than one half of the reference standard and are listed below.

Sample	Internal Standard	Value	QC Limits
SG02SG008	chlorobenzene-d5	740887	1091279 – 4365116
SG02SG009	chlorobenzene-d5	726796	1091279 – 4365116
SG03SG006	chlorobenzene-d5	953738	1091279 – 4365116

Internal standard area counts of less than 50% of the standard area count may indicate a loss of instrument sensitivity.

IV. Field Duplicates

A. The following RPDs were obtained for the field duplicate samples SG02SG009 / SG02SG008:

- 89% for propylene
- 35% for dichlorodifluoromethane
- 32% for 1,2-dichloro-1,1,2,2-tetrafluoromethane
- 34% for vinyl chloride
- 39% for chloroethane
- 42% for methylene chloride
- NQ for carbon disulfide
- 36% for t-1,2-dichloroethylene
- 33% for 1,1-dichloroethane
- 13% for cis-1,2-dichloroethene
- 9% for hexane
- NQ for 1,2-dichloroethane
- 2% for benzene
- 3% for cyclohexane
- 0% for trichloroethene
- 0% for heptane
- 6% for toluene
- 0% for tetrachloroethylene
- 2% for chlorobenzene
- 17% for ethylbenzene
- 2% for m,p-xylenes

- 2% for o-xylene
- 10% for 1,3,5-trimethylbenzene
- 4% for 1,2,4-trimethylbenzene
- NQ for 1,3-dichlorobenzene
- 5% for 1,4-dichlorobenzene
- 9% for 1,2-dichlorobenzene
- NQ for hexachlorobutadiene

For air samples, the field RPD guideline is ± 30%. The data are not qualified on the basis of field duplicate results.

V. Other Qualifications

A. The following results are qualified as estimated (J).

- All TO-15 detected results reported below the CRQL

Detected results reported below the CRQL are considered to be qualitatively acceptable, but quantitatively unreliable due to the uncertainty in analytical precision near the limit of detection.

B. The following detected results are qualified as estimated (J8) due to calibration range exceedance.

- propylene in samples SG02SG008, SG03SG002, SG03SG005 and SG03SG006

Analytes detected at concentrations exceeding the calibration range are quantitatively unreliable. The samples listed above were appropriately diluted and reanalyzed.

Full Validation Criteria for Sample SG02SG008

VI. GC/MS Tuning

A. The ion abundance criteria were met for the bromofluorobenzene (BFB) GC/MS performance check. The sample was analyzed within 12 hours of the associated performance check.

VII. Target Compound List (TCL) Identification

A. The relative retention times, mass spectra, and peak identifications of the sample were evaluated. Target compound identification was considered to be correct.

VIII. Compound Quantitation and Reported Detection Limits

A. Sample results were recalculated with the proper dilution factors and volumes used to calculate the sample results. The sample was found to be correctly quantitated. The reported detection limits were consistent with TtEMI's required report limits and reflect any dilutions and volumes.

IX. System Performance

A. The sample was evaluated for reconstructed ion chromatogram (RIC) baseline shifts, extraneous peaks, loss of resolution, and peak tailing. No system degradation was noted.

EPA METHOD 3C ANALYSIS

I. Blank Contamination

A. Due to field blank contamination, the following results are considered nondetected (U2).

- carbon dioxide in samples SG21SG001, SG21SG001DL and SG21SG002
- nitrogen in samples SG02SG008, SG02SG009, SG03SG002, SG03SG005, SG03SG006, SG21SG001, SG21SG001DL and SG21SG002
- oxygen in samples SG02SG008, SG02SG009, SG03SG002, SG03SG005, SG03SG006, SG21SG001, SG21SG001DL and SG21SG002

The following analytes were detected in the associated field blanks at the concentrations noted below.

Compound	Blank ID	Concentration, %
Carbon dioxide	SGFBSG009	0.05
Nitrogen	SGFBSG009	81
Oxygen	SGFBSG009	19.2

Detected results less than 5x the maximum blank contamination were qualified.

II. Calibrations

A. Due to continuing calibration problems, the following detected results are qualified as estimated (J7).

- nitrogen in samples SG03SG006, SG03SG002, SG03SG005, SG02SG008, SG02SG009, SG21SG001, SG21SG002 and SGFBSG009

The following continuing calibrations had percent differences (%D) of >20%.

Calibration Date	Compound	%D
4/11/02 8:05	nitrogen	23.3

III. Field Duplicates

A. The following RPDs were obtained for the field duplicate samples SG02SG009 / SG02SG008:

- 118% for oxygen
- 45% for nitrogen
- 13% for methane
- 4% for carbon dioxide

For air samples, the field RPD guideline is $\pm$ 30. The data are not qualified on the basis of field duplicate results.

IV. Other Qualifications

A. The following result is qualified as estimated (J).

- The methane detected result for SG21SG001DL is reported below the CRQL

Detected results reported below the CRQL are considered to be qualitatively acceptable, but quantitatively unreliable due to the uncertainty in analytical precision near the limit of detection.

B. The following detected results are qualified as estimated (J8) due to calibration range exceedance.

- carbon dioxide in samples SG02SG009 and SG03SG002
- methane in samples SG02SG008, SG02SG009 and SG03SG002
- oxygen in samples SG02SG009, SG21SG001 and SGFBSG009

Analytes detected at concentrations exceeding the calibration range are quantitatively unreliable. Samples SG21SG001 and SGFBSG009 were appropriately diluted and reanalyzed.

Full Validation Criteria for Sample SG02SG008

V. Compound Quantitation and Reported Detection Limits

A. Sample results were recalculated, with the proper dilution factors and volumes used to calculate the sample results. The sample was found to be correctly quantitated. The reported detection limits were consistent with TtEMI's required report limits and reflect any dilutions and volumes.

VI. System Performance

A. The sample was evaluated for baseline shifts, extraneous peaks, loss of resolution, and peak tailing. No system degradation was noted.

EPA METHOD 25C ANALYSIS

I. Field Duplicates

A. The following RPDs were obtained for the field duplicate samples SG02SG009 / SG02SG008:

- 13% for methane
- 4% for NMOC

For air samples, the field RPD guideline is ± 30%. The data are not qualified on the basis of field duplicate results.

II. Other Qualifications

A. The following detected results are qualified as estimated (J8) due to calibration range exceedance.

- methane in samples SG02SG008, SG02SG009, SG03SG002, SG03SG005, SG03SG006, SG21SG001 and SG21SG002

Analytes detected at concentrations exceeding the calibration range are quantitatively unreliable. Sample SG21SG001 was appropriately diluted and reanalyzed.

Full Validation Criteria for Sample SG02SG008

III. Compound Quantitation and Reported Detection Limits

A. Sample results were recalculated, with the proper dilution factors and volumes used to calculate the sample results. The sample was found to be correctly quantitated. The reported detection limits were consistent with TtEMI's required report limits and reflect any dilutions and volumes.

IV. System Performance

A. The sample was evaluated for baseline shifts, extraneous peaks, loss of resolution, and peak tailing. No system degradation was noted.

OVERALL ASSESSMENT OF DATA

I. Method Compliance and Additional Comments

A. Some results reported on the laboratory hardcopy do not match the electronic data deliverable (EDD) due to rounding. The dilution factor reported on the laboratory hardcopy for samples SG21SG001DL and SGFBSG009DL for EPA 3C analysis and sample SG03SG002 for TO-15 analysis does not match the EDD. The reporting limits in the EDD for sample SG21SG001DL for EPA 25C analysis do not match the laboratory hardcopy; the hardcopy is incorrect.

B. Methane values analyzed by method EPA 25C exceeding the calibration range for samples SG02SG008, SG02SG009, SG03SG002, SG03SG005, SG03SG006, SG21SG001 and SG21SG007 were obtained from EPA Method 3C.

C. The field blank for TO-15 was used as a matrix spike/matrix spike duplicate sample.

II. Usability

A. Due to high surrogate recovery in the TO-15 analyses, detected results for five samples and five dilutions were qualified as estimated. Due to calibration range exceedance, detected propylene results for four samples are qualified as estimated. Due to common laboratory contamination, detected methylene chloride results for eight samples and five dilutions and detected 2-butanone results for one sample and one dilution are qualified as nondetected. Due to field blank contamination, detected toluene results for four samples and four dilutions; detected hexachlorobutadiene results for five samples and two dilutions; and detected chloromethane and dichlorodifluoromethane results for one sample are qualified as nondetected.

B. Due to calibration problems in the EPA Method 3C analyses, detected nitrogen results for eight samples are qualified as estimated. Due to calibration range exceedance detected methane and oxygen results for three samples and detected carbon dioxide results for two samples are qualified as estimated. Due to field blank contamination detected carbon dioxide results for two samples and one dilution; detected nitrogen results for seven samples and one dilution; and oxygen results for seven samples and one dilution are qualified as nondetected.

C. Due to calibration range exceedance in the EPA Method 25C, methane results for seven samples are qualified as estimated.

D. Samples SG02SG008, SG02SG009, SG03SG002, SG03SG005 and SG03SG006 were diluted and reanalyzed for the TO-15 analysis due to matrix interference or internal standard exceedance. Compounds qualified as estimated in the original analysis of SG02SG008, SG02SG009 and SG03SG006 due to internal standard exceedance should be used from the dilution; all remaining compounds should be used from the original analysis. For samples SG03SG002 and SG03SG005, all results should be used from the original analysis.

E. Samples SG21SG001 and SGFBSG009 were diluted and reanalyzed for the EPA 3C analysis. Oxygen results should be used from the dilution and all remaining compounds should be used from the original analysis.

F. Sample SG21SG001 was diluted and reanalyzed for the EPA 25C analysis. Methane results should be used from the dilution, and NMOC should be used from the original analysis.

G. The quality control criteria reviewed, other than those discussed above, were met and are considered acceptable. Sample results that were found to be rejected (R) are unusable for all purposes. Sample results that were found to be estimated (J) are usable for limited purposes only. Based upon the cursory and full data validation all other results are considered valid and usable for all purposes. The high number of qualifications made to the data indicate several analytical and/or matrix problems that limit the usability of the data.

DATA VALIDATION REPORT{PRIVATE }

Site:	Hunters Point Shipyard, Parcel E Nonstandard Data Gaps Investigation
Contract Task Order (CTO) No.: DO 003	
Laboratory:	Atmospheric Analysis & Consulting, Inc.
Data Reviewer:	ETHIX
Review Date:	5/18/02

Sample Delivery Group (SDG) No.: HAN10

Sample Nos.:	SG01SG008	SG04SG004DL	SG25SG008	SGCSSG001DL
	SG03SG004	SG04SG005	SG27SG002	
	SG04SG004 *	SG04SG005DL	SGCSSG001 *	

Sample SG02SG010 was received with a broken neck upon arrival at the laboratory. The sample was canceled as instructed by TtEMI.

* Full Validation Sample

Matrix: Air

Collection Dates: 4/3/02 and 4/4/02

The data were qualified according to the U.S. Environmental Protection Agency (EPA) documents "USEPA Contract Laboratory Program National Functional Guidelines for Organic Data Review" (October 1999) and "USEPA Contract Laboratory Program National Functional Guidelines For Inorganic Data Review" (February 1994). In addition, the Tetra Tech EM Inc. (TtEMI) documents "Data Validation Guidelines for CLP Organic Analyses," "Data Validation Guidelines for CLP Inorganic Analyses," "Data Validation Guidelines for Non-CLP Organic Analyses," "Data Validation Guidelines for Non-CLP Inorganic and Physical Analyses" (August 1, 2001), and the document entitled “TtEMI Comprehensive Long-term Environmental Action Navy II Analytical Services Statement of Work” (May 2000) were used along with other specified criteria in EPA methods. Data validation requirements are presented below.

I certify that all data validation criteria outlined in the above referenced documents were assessed, and any qualifications made to the data were in accordance with those documents.

Certified by

DATA VALIDATION REQUIREMENTS

Full validation includes all parameters listed below. Cursory validation parameters are indicated by an asterisk (*).

CLP Organic Parameters

* Holding times
  GC/MS instrument performance check
* Initial and continuing calibrations
* Blanks
* Surrogate recovery
* Matrix spike/matrix spike duplicate
* Laboratory control sample or blank spike *
* Field duplicates
* Internal standard performance
  Target compound identification
  Tentatively identified compounds
  Compound quantitation
  Reported detection limits
  System performance
* Overall assessment of data for the SDG

CLP Inorganic Parameters

* Holding times
* Initial and continuing calibrations
* Blanks
* Matrix spike
* Laboratory control sample or blank spike
Field duplicates
* Matrix duplicates
  ICP interference check sample
  GFAA quality control
* ICP serial dilution
  Sample result verification
  Analyte quantitation
  Reported detection limits
* Overall assessment of data for the SDG

Non-CLP Organic and Inorganic Parameters

* Method compliance
* Holding times
* Initial and continuing calibrations
* Blanks
* Matrix spike/matrix spike duplicate
* Laboratory control sample or blank spike
* Field duplicates
* Matrix duplicates
* Surrogate recovery
  Analyte quantitation
  Reported detection limits
* Overall assessment of data for the SDG

DATA VALIDATION QUALIFIERS AND CODES

Data Validation Qualifiers and Codes

U1	Compound is nondetected due to laboratory blank contamination
U2	Compound is nondetected due to field blank contamination
U4	Compound is nondetected because of common laboratory contamination
J0	Compound is estimated due to internal standard exceedance
J1	Compound is estimated due to noncompliant instrument performance criteria
J2	Compound is estimated due to laboratory duplicate precision exceedance
J3	Compound is estimated due to surrogate/LCS/MS exceedance
J4	Compound is estimated due to serial dilution exceedance
J5	Compound is estimated due to holding time exceedance
J6	Compound is estimated due to field duplicate precision exceedance
J7	Compound is estimated due to calibration exceedance
J8	Compound is estimated due to calibration range exceedance
J9	Compound is estimated due to interference check exceedance (metals) or confirmation problems (dual column analyses)
UJ9	Compound is nondetected and estimated due to confirmation problems (dual column analyses)
R0	Compound is rejected due to internal standard exceedance
R1	Compound is rejected due to holding time exceedance
R2	Compound is rejected due to surrogate/LCS/MS exceedance
R3	Compound is rejected due to noncompliant instrument performance criteria
R7	Compound is rejected due to calibration exceedance

TABLE 1
CURSORY DATA VALIDATION SUMMARY

Analysis{PRIVATE}	Holding Times	Surrogates	MS/MSD	Matrix Duplicates	LCS	Blanks	Calibrations	Internal Standards	Field Duplicates	Other
TO-15	✓	Pg. 6	✓	N/A	✓	Pg. 7	✓	Pg. 7	Pg. 7	Pg. 8
EPA 3C	✓	N/A	✓	N/A	✓	✓	✓	N/A	Pg. 9	Pg. 9
EPA 25C	✓	N/A	✓	N/A	✓	✓	Pg. 10	N/A	Pg. 10	Pg. 10

Notes:
✓ indicates that all quality control criteria were met for the parameter as specified in the prescribed methods and data validation guidelines.
N/A indicates the parameter is not applicable to an analysis.
If criteria were not met and the data were qualified, a page number is indicated where the qualification is detailed.
The data were evaluated for all validation criteria and were found to be in control except where noted. Any outliers are described in the text.

TABLE 2
FULL DATA VALIDATION SUMMARY
Sample SGCSSG001 and SG04SG004

Analysis{PRIVATE }	GC/MS Tuning	Target Compound List Identification	Compound or Analyte Quantification	Reported Detection Limits	Tentatively Identified Compounds	System Performance	Interference Check Sample	Graphite Furnace Quality Control
TO-15	✓	✓	✓	✓	N/A	✓	N/A	N/A
EPA 3C	N/A	N/A	✓	✓	N/A	✓	N/A	N/A
EPA 25C	N/A	N/A	✓	✓	N/A	✓	N/A	N/A

Notes:
✓ indicates that all quality control criteria were met for the parameter as specified in the prescribed methods and data validation guidelines.
N/A indicates the parameter is not applicable to an analysis.
If criteria were not met and the data were qualified, a page number is indicated where the qualification is detailed.
The data were evaluated for all validation criteria and were found to be in control except where noted. Any outliers found are described below.

DATA ASSESSMENT

TO-15 ANALYSIS

I. Surrogate Recovery

A. Due to surrogate recovery problems, the following detected results are qualified as estimated (J3).

- 1,1-dichloroethane, 1,2,4-trimethylbenzene, 1,2-dichloro-1,1,2,2-tetrafluoroethane, 1,3,5-trimethylbenzene, 4-ethyltoluene, acetone, benzene, chloroethane, chloromethane, cis-1,2-dichloroethene, cyclohexane, dichlorodifluoromethane, ethylbenzene, heptane, hexane, m,p-xylenes, methylene chloride, o-xylene, propylene, toluene, trichloroethene and vinyl chloride in samples SG04SG005 and SG27SG002

- 2-butanone, t-1,2-dichloroethylene and tetrachloroethylene in samples SG04SG005

- ethanol, hexachlorobutadiene and styrene in sample SG27SG002

The surrogates outside of QC limits are listed below.

Sample ID	Surrogate	% R	QC Limits
SG04SG005	4-bromofluorobenzene	146	75-125
SG27SG002	4-bromofluorobenzene	134	75-125

High percent recoveries indicate that detected results may be biased high.

II. Blank Contamination

A. Due to common laboratory contamination, the following results are considered nondetected (U4).

- acetone in samples SG03SG004, SG25SG008 and SGCSSG001
- methylene chloride in samples SG01SG008, SG04SG005DL, SG25SG008, SG27SG002 and SGCSSG001
- 2-butanone in samples SG03SG004, SG04SG004, SG04SG004DL, SG25SG008 and SGCSSG001

Acetone, methylene chloride, and 2-butanone are considered common laboratory contaminants when found at levels less than 5x the CRQL in environmental samples and not found in the associated blanks.

B. Due to method blank contamination, the following results are considered nondetected (U1).

- propylene in sample SG25SG008

The following compounds were detected in the associated method blanks at the concentrations noted below.

Compound	Blank ID	Concentration, ppbv
Propylene	MBA040702-1	0.86

Detected results less than 5x the blank contamination were qualified.

III. Internal Standards

A. Due to internal standard problems, the following detected and nondetected results are qualified as estimated (J0/UJ0).

- All compounds quantitated using 1,4-difluorobenzene in sample SG04SG004

The internal standard area counts in the samples listed above were less than one half of the reference standard and are listed below.

Sample	Internal Standard	Value	QC Limits
SG04SG004	1,4-difluorobenzene	2619669	4232411 - 16929644

Internal standard area counts of less than 50% of the standard area count may indicate a loss of instrument sensitivity.

IV. Field Duplicates

A. The following RPDs were obtained for the field duplicate samples SG04SG003 / SG04SG004:

- 157% for propylene
- 105% for dichlorodifluoromethane
- 150% for chloromethane
- 125% for 1,2-dichloro-1,1,2,2-tetrafluoromethane
- 130% for vinyl chloride
- 132% for chloroethane
- NQ for acetone
- 115% for methylene chloride
- NQ for carbon disulfide
- NQ for 1,1,2-trichloro-1,2,2-trifluoroethane
- NQ for t-1,2-dichloroethylene
- 140% for 1,1-dichloroethane
- 47% for 2-butanone
- 144% for cis-1,2-dichloroethene
- 120% for hexane
- NQ for 1,2-dichloroethane
- 126% for benzene
- 129% for cyclohexane
- 64% for trichloroethene
- 56% for heptane
- 153% for toluene
- 15% for tetrachloroethylene
- 47% for ethylbenzene

- 51% for m,p-xylenes
- NQ for styrene
- 91% for o-xylene
- 28% for 1,2,4-trimethylbenzene
- NQ for 1,2,4-trichlorobenzene

For air samples, the field RPD guideline is ± 30%. The data are not qualified on the basis of field duplicate results.

V. Other Qualifications

A. The following results are qualified as estimated (J).

- All TO-15 detected results reported below the CRQL

Detected results reported below the CRQL are considered to be qualitatively acceptable, but quantitatively unreliable due to the uncertainty in analytical precision near the limit of detection.

Full Validation Criteria for Samples SGCSSG001 and SG04SG004

VI. GC/MS Tuning

A. The ion abundance criteria were met for the bromofluorobenzene (BFB) GC/MS performance check. The samples were analyzed within 12 hours of the associated performance check.

VII. Target Compound List (TCL) Identification

A. The relative retention times, mass spectra, and peak identifications of the samples were evaluated. Target compound identification was considered to be correct.

VIII. Compound Quantitation and Reported Detection Limits

A. Sample results were recalculated with the proper dilution factors, weights, volumes, and percent moisture used to calculate the sample results. The samples were found to be correctly quantitated. The reported detection limits were consistent with TtEMI's required report limits and reflect any dilutions, weights, volumes, and percent moisture.

IX. System Performance

A. The samples were evaluated for reconstructed ion chromatogram (RIC) baseline shifts, extraneous peaks, loss of resolution, and peak tailing. No system degradation was noted.

EPA METHOD 3C ANALYSIS

I. Other Qualifications

A. The following results are qualified as estimated (J).

- Carbon dioxide and methane results reported below the TtEMI required report limit (RL)

Detected results reported below the RL are considered to be qualitatively acceptable, but quantitatively unreliable due to the uncertainty in analytical precision near the limit of detection.

B. The following detected results are estimated (J8) due to calibration range exceedance.

- oxygen in samples SG01SG008, SG04SG004, SG25SG008, SG27SG002 and SGCSSG001
- methane in sample SG27SG002

Analytes detected at concentrations exceeding the calibration range are quantitatively unreliable. The samples listed above were not appropriately diluted and reanalyzed.

II. Field Duplicates

A. The following RPDs were obtained for the field duplicate samples SG04SG003 / SG04SG004:

- 83% for oxygen
- 89% for nitrogen
- 123% for methane
- 123% for carbon dioxide

For air samples, the field RPD guideline is $\pm$ 30. The data are not qualified on the basis of field duplicate results.

Full Validation Criteria for Samples SGCSSG001 and SG04SG004

III. Compound Quantitation and Reported Detection Limits

A. Sample results were recalculated, with the proper dilution factors, weights, volumes, and percent moisture used to calculate the sample results. The samples were found to be correctly quantitated. The reported detection limits were consistent with TtEMI's required report limits and reflect any dilutions, weights, volumes, and percent moisture.

IV. System Performance

A. The samples were evaluated for baseline shifts, extraneous peaks, loss of resolution, and peak tailing. No system degradation was noted.

EPA METHOD 25C ANALYSIS

I. Other Qualifications

A. The following detected results are estimated (J8) due to calibration range exceedance.

- methane in samples SG03SG004, SG04SG004, SG04SG005, SG27SG002 and SGCSSG001

Analytes detected at concentrations exceeding the calibration range are quantitatively unreliable. The samples listed above were not appropriately diluted and reanalyzed.

II. Field Duplicate

A. The following RPDs were obtained for the field duplicate samples SG04SG003 / SG04SG004:

- 120% for methane
- 119% for NMOC

For air samples, the field RPD guideline is ± 30%. The data are not qualified on the basis of field duplicate results.

Full Validation Criteria for Sample SGCSSG001 and SG04SG004

III. Compound Quantitation and Reported Detection Limits

A. Sample results were recalculated, with the proper dilution factors, weights, volumes, and percent moisture used to calculate the sample results. The samples were found to be correctly quantitated. The reported detection limits were consistent with TtEMI's required report limits and reflect any dilutions, weights, volumes, and percent moisture.

IV. System Performance

A. The samples were evaluated for baseline shifts, extraneous peaks, loss of resolution, and peak tailing. No system degradation was noted.

OVERALL ASSESSMENT OF DATA

I. Method Compliance and Additional Comments

A. Some results reported on the laboratory hardcopy do not match the electronic data deliverable (EDD) due to rounding. The laboratory ID reported in the EDD for EPA Method 25C for SG03SG004 was corrected to match the laboratory hardcopy. For EPA Method 25C sample SGCSSG001DL, the reporting limits were incorrect on the EDD printout and the nondetected result for NMOC is incorrect on the laboratory hardcopy.

B. Methane values exceeding the calibration range for samples SGCSSG001, SG03SG004, SG04SG004, SG04SG005 and SG25SG002 were obtained from EPA Method 3C.

C. Field blanks were used as matrix spike/matrix spike duplicate samples for the TO-15 analysis.

II. Usability

A. Due to high surrogate recovery in the TO-15 analyses, detected results for two samples were qualified as estimated. Due to poor internal standard response, results for compounds quantitated using internal standard 1,4-difluorbenzene for one sample are qualified as estimated. Due to common laboratory contamination, detected methylene chloride results for four samples and one dilution; detected acetone results for four samples; and detected 2-butanone results for four samples and one dilution are qualified as nondetected. Due to method blank contamination, the detected propylene result for one sample is qualified as nondetected.

B. Due to calibration range exceedance in the EPA Method 3C analyses, oxygen results for four samples and the methane result for one sample are qualified as estimated.

C. Samples SG04SG004 and SG04SG005 were diluted and reanalyzed for the TO-15 analysis due to matrix interference and/or poor internal standard response, or high surrogate recovery. Compounds qualified in sample SG04SG004 due to poor internal standard response should be used from the dilution and all remaining compounds should be used from the original analysis. Detected compounds in SG04SG005 should be used from the dilution and nondetected results should be used from the original analysis.

D. Sample SGCSSG001 was diluted and reanalyzed for the EPA 25C analysis. Methane results should be used from the dilution and NMOC results should be used from the original analysis.

E. The quality control criteria reviewed, other than those discussed above, were met and are considered acceptable. Sample results that were found to be rejected (R) are unusable for all purposes. Sample results that were found to be estimated (J) are usable for limited purposes only. Based upon the cursory and full data validation all other results are considered valid and usable for all purposes. In general, the absence of rejected data and the small number of qualifiers added to the EPA 3C data indicate high usability. The high number of qualifications made to the EPA 25C and TO-15 data indicate several analytical and/or matrix problems that limit the usability of the data.

DATA VALIDATION REPORT{PRIVATE }

Site:	Hunters Point Shipyard, Parcel E Nonstandard Data Gaps Investigation
Contract Task Order (CTO) No.: DO 003	
Laboratory:	Atmospheric Analysis & Consulting, Inc.
Data Reviewer:	ETHIX
Review Date:	5/18/02

Sample Delivery Group (SDG) No.: HAN11

Sample Nos.	SG02SG011	SG03SG007	SG25SG010 *	SGFBSG010
	SG02SG012	SG25SG009	SG25SG010DL	SGLPSG001
	SG03SG003 *	SG25SG009DL	SG25SG010DL2	

All samples were received intact and properly labeled.

* Full Validation Sample

Matrix: Air

Collection Dates: 4/3/02 and 4/5/02

The data were qualified according to the U.S. Environmental Protection Agency (EPA) documents "USEPA Contract Laboratory Program National Functional Guidelines for Organic Data Review" (October 1999) and "USEPA Contract Laboratory Program National Functional Guidelines For Inorganic Data Review" (February 1994). In addition, the Tetra Tech EM Inc. (TtEMI) documents "Data Validation Guidelines for CLP Organic Analyses," "Data Validation Guidelines for CLP Inorganic Analyses," "Data Validation Guidelines for Non-CLP Organic Analyses," "Data Validation Guidelines for Non-CLP Inorganic and Physical Analyses" (August 1, 2001), and the document entitled “TtEMI Comprehensive Long-term Environmental Action Navy II Analytical Services Statement of Work” (May 2000) were used along with other specified criteria in EPA methods. Data validation requirements are presented below.

I certify that all data validation criteria outlined in the above referenced documents were assessed, and any qualifications made to the data were in accordance with those documents.

Certified by

DATA VALIDATION REQUIREMENTS

Full validation includes all parameters listed below. Cursory validation parameters are indicated by an asterisk (*).

CLP Organic Parameters

* Holding times
  GC/MS instrument performance check
* Initial and continuing calibrations
* Blanks
* Surrogate recovery
* Matrix spike/matrix spike duplicate
* Laboratory control sample or blank spike *
* Field duplicates
* Internal standard performance
  Target compound identification
  Tentatively identified compounds
  Compound quantitation
  Reported detection limits
  System performance
* Overall assessment of data for the SDG

CLP Inorganic Parameters

* Holding times
* Initial and continuing calibrations
* Blanks
* Matrix spike
* Laboratory control sample or blank spike
Field duplicates
* Matrix duplicates
  ICP interference check sample
  GFAA quality control
* ICP serial dilution
  Sample result verification
  Analyte quantitation
  Reported detection limits
* Overall assessment of data for the SDG

Non-CLP Organic and Inorganic Parameters

* Method compliance
* Holding times
* Initial and continuing calibrations
* Blanks
* Matrix spike/matrix spike duplicate
* Laboratory control sample or blank spike
* Field duplicates
* Matrix duplicates
* Surrogate recovery
  Analyte quantitation
  Reported detection limits
* Overall assessment of data for the SDG

DATA VALIDATION QUALIFIERS AND CODES

Data Validation Qualifiers and Codes

U1	Compound is nondetected due to laboratory blank contamination
U2	Compound is nondetected due to field blank contamination
U4	Compound is nondetected because of common laboratory contamination
J0	Compound is estimated due to internal standard exceedance
J1	Compound is estimated due to noncompliant instrument performance criteria
J2	Compound is estimated due to laboratory duplicate precision exceedance
J3	Compound is estimated due to surrogate/LCS/MS exceedance
J4	Compound is estimated due to serial dilution exceedance
J5	Compound is estimated due to holding time exceedance
J6	Compound is estimated due to field duplicate precision exceedance
J7	Compound is estimated due to calibration exceedance
J8	Compound is estimated due to calibration range exceedance
J9	Compound is estimated due to interference check exceedance (metals) or confirmation problems (dual column analyses)
UJ9	Compound is nondetected and estimated due to confirmation problems (dual column analyses)
R0	Compound is rejected due to internal standard exceedance
R1	Compound is rejected due to holding time exceedance
R2	Compound is rejected due to surrogate/LCS/MS exceedance
R3	Compound is rejected due to noncompliant instrument performance criteria
R7	Compound is rejected due to calibration exceedance

TABLE 1
CURSORY DATA VALIDATION SUMMARY

Analysis{PRIVATE}	Holding Times	Surrogates	MS/MSD	Matrix Duplicates	LCS	Blanks	Calibrations	Internal Standards	Field Duplicates	Other
TO-15	✓	✓	✓	N/A	✓	Pg. 6	Pg. 7	✓	N/A	Pg. 8
EPA 3C	✓	N/A	✓	N/A	✓	Pg. 9	✓	N/A	N/A	Pg. 9
EPA 25C	✓	N/A	✓	N/A	✓	✓	✓	N/A	N/A	Pg. 11

Notes:
✓ indicates that all quality control criteria were met for the parameter as specified in the prescribed methods and data validation guidelines.
N/A indicates the parameter is not applicable to an analysis.
If criteria were not met and the data were qualified, a page number is indicated where the qualification is detailed.
The data were evaluated for all validation criteria and were found to be in control except where noted. Any outliers are described in the text.

TABLE 2
FULL DATA VALIDATION SUMMARY
Samples SG03SG003 and SG25SG010

Analysis{PRIVATE }	GC/MS Tuning	Target Compound List Identification	Compound or Analyte Quantification	Reported Detection Limits	Tentatively Identified Compounds	System Performance	Interference Check Sample	Graphite Furnace Quality Control
TO-15	✓	✓	✓	✓	N/A	✓	N/A	N/A
EPA 3C	N/A	N/A	✓	✓	N/A	✓	N/A	N/A
EPA 25C	N/A	N/A	✓	✓	N/A	✓	N/A	N/A

Notes:
✓ indicates that all quality control criteria were met for the parameter as specified in the prescribed methods and data validation guidelines.
N/A indicates the parameter is not applicable to an analysis.
If criteria were not met and the data were qualified, a page number is indicated where the qualification is detailed.
The data were evaluated for all validation criteria and were found to be in control except where noted. Any outliers found are described below.

DATA ASSESSMENT

TO-15 ANALYSIS

I. Blank Contamination

A. Due to common laboratory contamination, the following results are considered nondetected (U4).

- methylene chloride in samples SG02SG011, SG02SG012, SG03SG003, SG03SG007, SG25SG009, SG25SG009DL, SG25SG010, SG25SG010DL, SG25SG010DL2 and SGLPSG001
- acetone in samples SG02SG012, SG03SG003, SG25SG009DL and SG25SG010DL2
- 2-butanone in sample SG25SG010DL

Acetone, methylene chloride and 2-butanone are considered common laboratory contaminants when found at levels less than 5x the CRQL in environmental samples and not found in the associated blanks.

B. Due to field blank contamination, the following results are considered nondetected (U2).

- 1,2,4-trimethylbenzene in samples SG02SG011, SG02SG012, SG03SG007, SG25SG009, SG25SG009DL, SG25SG010 and SGLPSG001
- 1,2-dichlorobenzene in samples SG02SG012, SG03SG007, SG25SG009, SG25SG009DL, SG25SG010 and SGLPSG001
- 1,3-dichlorobenzene in samples SG03SG007, SG25SG009, SG25SG009DL, SG25SG010, SG25SG010DL and SGLPSG001
- 1,4-dichlorobenzene in samples SG02SG012, SG03SG007, SG25SG009, SG25SG009DL, SG25SG010, SG25SG010DL and SGLPSG001
- 2-butanone in sample SG25SG010
- acetone in samples SG02SG011, SG03SG007, SG25SG009, SG25SG010, SG25SG010DL and SGLPSG001
- carbon disulfide in samples SG25SG010, SG25SG010DL and SGLPSG001
- chloromethane in samples SG03SG007, SG25SG009, SG25SG009DL, SG25SG010, SG25SG010DL and SGLPSG001
- dichlorodifluoromethane in sample SGLPSG001
- ethanol in samples SG02SG011, SG02SG012, SG03SG007 and SGLPSG001
- heptane in samples SG25SG009, SG25SG009DL, SG25SG010, SG25SG010DL and SGLPSG001
- hexane in samples SG03SG003, SG25SG010, SG25SG010DL and SG25SG010DL2
- isopropyl alcohol in samples SG25SG009, SG25SG009DL and SGLPSG001
- m,p-xylenes in samples SG02SG011, SG02SG012, SG03SG003, SG03SG007, SG25SG009, SG25SG009DL, SG25SG010, SG25SG010DL, SG25SG010DL2 and SGLPSG001
- propylene in sample SGLPSG001
- styrene in samples SG25SG010 and SG25SG010DL
- toluene in samples SG02SG011, SG03SG003, SG25SG009, SG25SG009DL, SG25SG010, SG25SG010DL, SG25SG010DL2 and SGLPSG001

- trichlorofluoromethane in sample SGLPSG001

The following analytes were detected in the associated field blank at the concentrations noted below.

Analyte	Blank ID	Concentration, ppbv
1,2,4-trimethylbenzene	SGFBSG010	2.76
1,2-dichlorobenzene	SGFBSG010	1.16
1,3-dichlorobenzene	SGFBSG010	1.05
1,4-dichlorobenzene	SGFBSG010	1.89
2-butanone	SGFBSG010	9.1
acetone	SGFBSG010	57.72
carbon disulfide	SGFBSG010	41.27
chloromethane	SGFBSG010	1.74
dichlorodifluoromethane	SGFBSG010	0.86
ethanol	SGFBSG010	52.15
heptane	SGFBSG010	5.56
hexane	SGFBSG010	165.8
isopropyl alcohol	SGFBSG010	44.14
m,p-xylenes	SGFBSG010	1.53
propylene	SGFBSG010	1.19
styrene	SGFBSG010	1.88
toluene	SGFBSG010	41.27
trichlorofluoromethane	SGFBSG010	1.3

Detected results less than 5x the maximum blank contamination were qualified.

II. Calibrations

A. Due to a continuing calibration problem, the following nondetected results are qualified as estimated (UJ7).

- 2-hexanone in samples SG02SG011, SG02SG012, SG03SG003, SG03SG007, SG25SG009, SG25SG009DL, SG25SG010, SG25SG010DL, SG25SG010DL2, SGFBSG010 and SGLPSG001

The following continuing calibration had a percent differences (%D) of >25%.

Calibration Date	Compound	%D
4/9/02 12:06 pm	2-hexanone	28.4

III. Other Qualifications

A. The following results are qualified as estimated (J).

- All TO-15 detected results reported below the CRQL

Detected results reported below the CRQL are considered to be qualitatively acceptable, but quantitatively unreliable due to the uncertainty in analytical precision near the limit of detection.

B. The following detected results are estimated (J8) due to calibration range exceedance.

- ethanol in samples SG25SG009, SG25SG010 and SG25SG010DL

Analytes detected at concentrations exceeding the calibration range are quantitatively unreliable. The samples listed above were appropriately diluted and reanalyzed.

Full Validation Criteria for Samples SG03SG003 and SG25SG010

IV. GC/MS Tuning

A. The ion abundance criteria were met for the bromofluorobenzene (BFB) GC/MS performance check. The samples were analyzed within 12 hours of the associated performance check.

V. Target Compound List (TCL) Identification

A. The relative retention times, mass spectra, and peak identifications of the samples were evaluated. Target compound identification was considered to be correct.

VI. Compound Quantitation and Reported Detection Limits

A. Sample results were recalculated with the proper dilution factors and volumes used to calculate the sample results. The samples were found to be correctly quantitated. The reported detection limits were consistent with TtEMI's required report limits and reflect any dilutions and volumes.

VII. System Performance

A. The samples were evaluated for reconstructed ion chromatogram (RIC) baseline shifts, extraneous peaks, loss of resolution, and peak tailing. No system degradation was noted.

EPA METHOD 3C ANALYSIS

I. Blank Contamination

A. Due to field blank contamination, the following results are considered nondetected (U2).

- carbon dioxide in samples SG03SG007, SG25SG009 and SGLPSG001
- nitrogen in samples SG02SG011, SG02SG012, SG03SG003, SG03SG007, SG25SG009, SG25SG010 and SGLPSG001
- oxygen in samples SG02SG011, SG02SG012, SG03SG003, SG03SG007, SG25SG009, SG25SG010 and SGLPSG001

The following analytes were detected in the associated field, trip, and equipment rinsate blanks at the concentrations noted below.

Compound	Blank ID	Concentration, %
Carbon dioxide	SGFBSG010	0.05
Nitrogen	SGFBSG010	76.57
Oxygen	SGFBSG010	18.11

Detected results less than 5x the maximum blank contamination were qualified.

II. Other Qualifications

A. The following result is qualified as estimated (J).

- Carbon dioxide in sample SGFBSG010 detected result is reported below the CRQL

Detected results reported below the CRQL are considered to be qualitatively acceptable, but quantitatively unreliable due to the uncertainty in analytical precision near the limit of detection.

B. The following detected results are estimated (J8) due to calibration range exceedance.

- oxygen in samples SG02SG011, SG03SG007, SG25SG009, SGFBSG010 and SGLPSG001

Analytes detected at concentrations exceeding the calibration range are quantitatively unreliable. The samples listed above were not appropriately diluted and reanalyzed.

Full Validation Criteria for Samples SG03SG003 and SG25SG010

III. Compound Quantitation and Reported Detection Limits

A. Sample results were recalculated, with the proper dilution factors and volumes used to calculate the sample results. The samples were found to be correctly quantitated. The reported detection limits were consistent with TtEMI's required report limits and reflect any dilutions, weights, volumes, and percent moisture.

IV. System Performance

A. The samples were evaluated for baseline shifts, extraneous peaks, loss of resolution, and peak tailing. No system degradation was noted.

EPA METHOD 25C ANALYSIS

I. Other Qualifications

A. The following detected results are estimated (J8) due to calibration range exceedance.

- methane in samples SG03SG003 and SG25SG010

Analytes detected at concentrations exceeding the calibration range are quantitatively unreliable. The samples listed above were not appropriately diluted and reanalyzed.

Full Validation Criteria for Samples SG03SG003 and SG25SG010

II. Compound Quantitation and Reported Detection Limits

A. Sample results were recalculated, with the proper dilution factors and volumes used to calculate the sample results. The samples were found to be correctly quantitated. The reported detection limits were consistent with TtEMI's required report limits and reflect any dilutions and volumes.

III. System Performance

A. The samples were evaluated for baseline shifts, extraneous peaks, loss of resolution, and peak tailing. No system degradation was noted.

OVERALL ASSESSMENT OF DATA

I. Method Compliance and Additional Comments

A. Some results reported on the laboratory hardcopy do not match the electronic data deliverable (EDD) due to rounding. For the EPA 25C analyses, the client ID on the EDD printout was corrected for sample SGLPSG001.

B. Methane values exceeding the calibration range for samples SG03SG003 and SG25SG010 were obtained from EPA Method 3C.

II. Usability

A. Due to calibration problems in the TO-15 analyses, nondetected 2-hexanone results for eleven samples are qualified as estimated. Due to calibration range exceedance, detected ethanol results for two samples and one dilution are qualified as estimated. Due to common laboratory contamination, detected methylene chloride results for seven samples and three dilutions; detected acetone results for two samples and two dilutions; and detected 2-butanone results for one dilution are qualified as nondetected. Due to field blank contamination, detected m,p-xylenes results for seven samples and three dilutions; detected 1,2,4-trimethylbenzene results for six samples and one dilution; detected toluene results for five samples and three dilutions; detected 1,4-dichlorobenzene results for five samples and two dilutions; detected 1,2-dichlorobenzene and acetone results for five samples and one dilution; detected 1,3-dichlorobenzene and chloromethane results for four samples and two dilutions detected; detected ethanol results for four samples; detected carbon disulfide and isopropyl alcohol results for two samples and one dilution; detected heptane results for three samples and two dilutions; detected hexane results for two samples and two dilutions; and detected styrene results for one sample and one dilution; and detected 2-butanone, dichlorodifluoromethane, dichlorodifluoromethane, propylene and trichlorofluoromethane results for one sample are qualified as nondetected.

B. Due to calibration range exceedance in the EPA Method 3C analyses, detected oxygen results for five samples are qualified as estimated. Due to field blank contamination, detected carbon dioxide results for three samples, detected nitrogen and oxygen results for seven samples are qualified as nondetected.

C. Due to calibration range exceedance in the EPA Method 25C, methane results for two samples are qualified as estimated.

D. Samples SG25SG009 and SG25SG010 were diluted and reanalyzed for the TO-15 analysis due to ethanol exceeding the calibration range. All other compounds should be used from the original analysis and ethanol should be used from the appropriate dilution.

E. The quality control criteria reviewed, other than those discussed above, were met and are considered acceptable. Sample results that were found to be rejected (R) are unusable for all purposes. Sample results that were found to be estimated (J) are usable for limited purposes only. Based upon the cursory and full data validation all other results are considered valid and usable for all purposes. In general, the absence of rejected data and the small number of qualifiers added to the EPA 25C data indicates high usability. The high number of qualifications made to the TO-15 and EPA 3C data indicate sample collection problems that limit the usability of the data.

DATA VALIDATION REPORT{PRIVATE }

Site: Hunters Point Shipyard, Parcel E
Nonstandard Data Gaps Investigation
Contract Task Order (CTO) No.: DO 003
Laboratory: Atmospheric Analysis & Consulting, Inc.
Data Reviewer: ETHIX
Review Date: 5/18/02

Sample Delivery Group (SDG) No.: HAN12

Sample Nos.: SG03SG008

All samples were received intact and properly labeled.

* Full Validation Sample

Matrix: Air

Collection Date: 4/5/02

The data were qualified according to the U.S. Environmental Protection Agency (EPA) documents "USEPA Contract Laboratory Program National Functional Guidelines for Organic Data Review" (October 1999) and "USEPA Contract Laboratory Program National Functional Guidelines For Inorganic Data Review" (February 1994). In addition, the Tetra Tech EM Inc. (TtEMI) documents "Data Validation Guidelines for CLP Organic Analyses," "Data Validation Guidelines for CLP Inorganic Analyses," "Data Validation Guidelines for Non-CLP Organic Analyses," "Data Validation Guidelines for Non-CLP Inorganic and Physical Analyses" (August 1, 2001), and the document entitled "TtEMI Comprehensive Long-term Environmental Action Navy II Analytical Services Statement of Work" (May 2000) were used along with other specified criteria in EPA methods. Data validation requirements are presented below.

I certify that all data validation criteria outlined in the above referenced documents were assessed, and any qualifications made to the data were in accordance with those documents.

Certified by

DATA VALIDATION REQUIREMENTS

Full validation includes all parameters listed below. Cursory validation parameters are indicated by an asterisk (*).

CLP Organic Parameters

* Holding times
  GC/MS instrument performance check
* Initial and continuing calibrations
* Blanks
* Surrogate recovery
* Matrix spike/matrix spike duplicate
* Laboratory control sample or blank spike *
* Field duplicates
* Internal standard performance
  Target compound identification
  Tentatively identified compounds
  Compound quantitation
  Reported detection limits
  System performance
* Overall assessment of data for the SDG

CLP Inorganic Parameters

* Holding times
* Initial and continuing calibrations
* Blanks
* Matrix spike
* Laboratory control sample or blank spike
Field duplicates
* Matrix duplicates
  ICP interference check sample
  GFAA quality control
* ICP serial dilution
  Sample result verification
  Analyte quantitation
  Reported detection limits
* Overall assessment of data for the SDG

Non-CLP Organic and Inorganic Parameters

* Method compliance
* Holding times
* Initial and continuing calibrations
* Blanks
* Matrix spike/matrix spike duplicate
* Laboratory control sample or blank spike
* Field duplicates
* Matrix duplicates
* Surrogate recovery
  Analyte quantitation
  Reported detection limits
* Overall assessment of data for the SDG

DATA VALIDATION QUALIFIERS AND CODES

Data Validation Qualifiers and Codes

U1	Compound is nondetected due to laboratory blank contamination
U2	Compound is nondetected due to field blank contamination
U4	Compound is nondetected because of common laboratory contamination
J0	Compound is estimated due to internal standard exceedance
J1	Compound is estimated due to noncompliant instrument performance criteria
J2	Compound is estimated due to laboratory duplicate precision exceedance
J3	Compound is estimated due to surrogate/LCS/MS exceedance
J4	Compound is estimated due to serial dilution exceedance
J5	Compound is estimated due to holding time exceedance
J6	Compound is estimated due to field duplicate precision exceedance
J7	Compound is estimated due to calibration exceedance
J8	Compound is estimated due to calibration range exceedance
J9	Compound is estimated due to interference check exceedance (metals) or confirmation problems (dual column analyses)
UJ9	Compound is nondetected and estimated due to confirmation problems (dual column analyses)
R0	Compound is rejected due to internal standard exceedance
R1	Compound is rejected due to holding time exceedance
R2	Compound is rejected due to surrogate/LCS/MS exceedance
R3	Compound is rejected due to noncompliant instrument performance criteria
R7	Compound is rejected due to calibration exceedance

TABLE 1
CURSORY DATA VALIDATION SUMMARY

Analysis{PRIVATE}	Holding Times	Surrogates	MS/MSD	Matrix Duplicates	LCS	Blanks	Calibrations	Internal Standards	Field Duplicates	Other
TO-15	✓	✓	✓	N/A	✓	Pg. 6	Pg. 6	✓	N/A	Pg. 6
EPA 3C	✓	N/A	✓	N/A	✓	✓	✓	N/A	N/A	Pg. 7
EPA 25C	✓	N/A	✓	N/A	✓	✓	✓	N/A	N/A	✓

Notes:
✓ indicates that all quality control criteria were met for the parameter as specified in the prescribed methods and data validation guidelines.
N/A indicates the parameter is not applicable to an analysis.
If criteria were not met and the data were qualified, a page number is indicated where the qualification is detailed.
The data were evaluated for all validation criteria and were found to be in control except where noted. Any outliers are described in the text.

TABLE 2
FULL DATA VALIDATION SUMMARY
(Not Required)

Analysis{PRIVATE }	GC/MS Tuning	Target Compound List Identification	Compound or Analyte Quantification	Reported Detection Limits	Tentatively Identified Compounds	System Performance	Interference Check Sample	Graphite Furnace Quality Control
TO-15	N/A	N/A	N/A	N/A	N/A	N/A	N/A	N/A
EPA 3C	N/A	N/A	N/A	N/A	N/A	N/A	N/A	N/A
EPA 25C	N/A	N/A	N/A	N/A	N/A	N/A	N/A	N/A

Notes:
✓ indicates that all quality control criteria were met for the parameter as specified in the prescribed methods and data validation guidelines.
N/A indicates the parameter is not applicable to an analysis.
If criteria were not met and the data were qualified, a page number is indicated where the qualification is detailed.
The data were evaluated for all validation criteria and were found to be in control except where noted. Any outliers found are described below.

DATA ASSESSMENT

TO-15 ANALYSIS

Full validation was not required for this method.

I. Blank Contamination

A. Due to common laboratory contamination, the following result is considered nondetected (U1).

- methylene chloride in sample SG03SG008

Methylene chloride is considered a common laboratory contaminant when found at levels less than 5x the CRQL in environmental samples and not found in the associated blanks.

II. Calibrations

A. Due to a continuing calibration problem, the following nondetected result is qualified as estimated (UJ7).

- 2-hexanone in sample SG03SG008

The following continuing calibration had a percent difference (%D) of >25%.

Calibration Date	Compound	%D
4/9/02 12:06	2-hexanone	28.4

III. Other Qualifications

A. The following results are qualified as estimated (J).

- Six detected results reported below the CRQL

Detected results reported below the CRQL are considered to be qualitatively acceptable, but quantitatively unreliable due to the uncertainty in analytical precision near the limit of detection.

EPA METHOD 3C ANALYSIS

Full validation was not required for this method.

I. Other Qualifications

A. The following detected result is estimated (J8) due to calibration range exceedance:

- Oxygen in sample SG03SG008

Analytes detected at concentrations exceeding the calibration range are quantitatively unreliable. The sample listed above was not appropriately diluted and reanalyzed.

EPA METHOD 25C ANALYSIS

All cursory requirements were met by this method. Full validation was not required.

OVERALL ASSESSMENT OF DATA

I. Method Compliance and Additional Comments

A. Some results reported on the laboratory hardcopy do not match the electronic data deliverable (EDD) due to rounding.

II. Usability

A. Due to calibration problems in the TO-15 analyses, the 2-hexanone result for one sample is qualified as estimated. Due to common laboratory contamination, the detected methylene chloride result for one sample was qualified as nondetected.

B. Due to calibration range exceedance in the EPA Method 3C analyses, the oxygen result for one sample is qualified as estimated.

C. The quality control criteria reviewed, other than those discussed above, were met and are considered acceptable. Sample results that were found to be estimated (J) are usable for limited purposes only. Based upon the cursory and full data validation all other results are considered valid and usable for all purposes. In general, the absence of rejected data and the small number of qualifiers added to the data indicate high usability.

DATA VALIDATION REPORT{PRIVATE }

Site: Hunters Point Shipyard, Parcel E
Nonstandard Data Gaps Investigation
Contract Task Order (CTO) No.: DO 003
Laboratory: Atmospheric Analysis & Consulting, Inc.
Data Reviewer: ETHIX
Review Date: 6/27/02

Sample Delivery Group (SDG) No.: HAN13

Sample Nos.				
	1R01MW16ASG001	GMP02SG001	GMP07SG001 *	GMP12SG002
	1R01MW18ASG001 *	GMP03SG001	GMP07SG001RE	GMPAA001
	1R01MW366ASG001	GMP04SG001 *	GMP07SG002	GMPAA001RE
	1R01MW366ASG001RE	GMP05SG001	GMP08SG001 *	GMPFB001
	1R01MWI-5SG001	GMP06SG001	GMP11SG001	GMPFB001RE
	GMP01SG001	GMP06SG001RE	GMP12SG001	

Sample GMP11SG001 was received at a low pressure; the laboratory re-pressurized the canister prior to analysis, therefore results for all target compounds for all methods are qualified as estimated (J/UJ).

Matrix: Air

Collection Date: 4/22/02

The data were qualified according to the U.S. Environmental Protection Agency (EPA) documents "USEPA Contract Laboratory Program National Functional Guidelines for Organic Data Review" (October 1999) and "USEPA Contract Laboratory Program National Functional Guidelines For Inorganic Data Review" (February 1994). In addition, the Tetra Tech EM Inc. (TtEMI) documents "Data Validation Guidelines for CLP Organic Analyses," "Data Validation Guidelines for CLP Inorganic Analyses," "Data Validation Guidelines for Non-CLP Organic Analyses," "Data Validation Guidelines for Non-CLP Inorganic and Physical Analyses" (August 1, 2001), and the document entitled “TtEMI Comprehensive Long-term Environmental Action Navy II Analytical Services Statement of Work” (May 2000) were used along with other specified criteria in EPA methods. Data validation requirements are presented on page 2.

I certify that all data validation criteria outlined in the above referenced documents were assessed, and any qualifications made to the data were in accordance with those documents.

Certified by

DATA VALIDATION REQUIREMENTS

Full validation includes all parameters listed below. Cursory validation parameters are indicated by an asterisk (*).

CLP Organic Parameters

* Holding times
  GC/MS instrument performance check
* Initial and continuing calibrations
* Blanks
* Surrogate recovery
* Matrix spike/matrix spike duplicate
* Laboratory control sample or blank spike *
* Field duplicates
* Internal standard performance
  Target compound identification
  Tentatively identified compounds
  Compound quantitation
  Reported detection limits
  System performance
* Overall assessment of data for the SDG

CLP Inorganic Parameters

* Holding times
* Initial and continuing calibrations
* Blanks
* Matrix spike
* Laboratory control sample or blank spike
Field duplicates
* Matrix duplicates
  ICP interference check sample
  GFAA quality control
* ICP serial dilution
  Sample result verification
  Analyte quantitation
  Reported detection limits
* Overall assessment of data for the SDG

Non-CLP Organic and Inorganic Parameters

* Method compliance
* Holding times
* Initial and continuing calibrations
* Blanks
* Matrix spike/matrix spike duplicate
* Laboratory control sample or blank spike
* Field duplicates
* Matrix duplicates
* Surrogate recovery
  Analyte quantitation
  Reported detection limits
* Overall assessment of data for the SDG

DATA VALIDATION QUALIFIERS AND CODES

Data Validation Qualifiers and Codes

U1	Compound is nondetected due to laboratory blank contamination
U2	Compound is nondetected due to field blank contamination
U4	Compound is nondetected because of common laboratory contamination
J0	Compound is estimated due to internal standard exceedance
J1	Compound is estimated due to noncompliant instrument performance criteria
J2	Compound is estimated due to laboratory duplicate precision exceedance
J3	Compound is estimated due to surrogate/LCS/MS exceedance
J4	Compound is estimated due to serial dilution exceedance
J5	Compound is estimated due to holding time exceedance
J6	Compound is estimated due to field duplicate precision exceedance
J7	Compound is estimated due to calibration exceedance
J8	Compound is estimated due to calibration range exceedance
J9	Compound is estimated due to interference check exceedance (metals) or confirmation problems (dual column analyses)
UJ9	Compound is nondetected and estimated due to confirmation problems (dual column analyses)
R0	Compound is rejected due to internal standard exceedance
R1	Compound is rejected due to holding time exceedance
R2	Compound is rejected due to surrogate/LCS/MS exceedance
R3	Compound is rejected due to noncompliant instrument performance criteria
R7	Compound is rejected due to calibration exceedance

TABLE 1
CURSORY DATA VALIDATION SUMMARY

Analysis{PRIVATE }	Holding Times	Surrogates	MS/MSD	Matrix Duplicates	LCS	Blanks	Calibrations	Internal Standards	Field Duplicates	Other
TO-15	✓	Pg. 6	✓	N/A	✓	Pg. 6	✓	Pg. 7	Pg. 8	Pg. 9
EPA 3C	✓	N/A	✓	N/A	✓	✓	✓	N/A	Pg. 11	N/A
EPA 25C	✓	N/A	✓	N/A	✓	✓	✓	N/A	Pg. 12	N/A

Notes:
✓ indicates that all quality control criteria were met for the parameter as specified in the prescribed methods and data validation guidelines.
N/A indicates the parameter is not applicable to an analysis.
If criteria were not met and the data were qualified, a page number is indicated where the qualification is detailed.
The data were evaluated for all validation criteria and were found to be in control except where noted. Any outliers are described in the text.

TABLE 2
FULL DATA VALIDATION SUMMARY
Samples 1R01MW18ASG001, GMP04SG001, GMP07SG001 and GMP08SG001

Analysis{PRIVATE }	GC/MS Tuning	Target Compound List Identification	Compound or Analyte Quantification	Reported Detection Limits	Tentatively Identified Compounds	System Performance	Interference Check Sample	Graphite Furnace Quality Control
TO-15	✓	✓	✓	✓	N/A	✓	N/A	N/A
EPA 3C	N/A	N/A	✓	✓	N/A	✓	N/A	N/A
EPA 25C	N/A	N/A	✓	✓	N/A	✓	N/A	N/A

Notes:
✓ indicates that all quality control criteria were met for the parameter as specified in the prescribed methods and data validation guidelines.
N/A indicates the parameter is not applicable to an analysis.
If criteria were not met and the data were qualified, a page number is indicated where the qualification is detailed.
The data were evaluated for all validation criteria and were found to be in control except where noted. Any outliers found are described below.

DATA ASSESSMENT

TO-15 ANALYSIS

I. Surrogate Recovery

A. Due to surrogate recovery problems, detected results are qualified as estimated (J3) in the following samples:

- GMP01SG001, GMP02SG001, GMP03SG001, GMP06SG001RE, GMP07SG002, GMP08SG001, GMP11SG001, GMP12SG001 and GMP12SG002

The surrogates outside of QC limits are listed below.

Sample ID	Surrogate	% R	QC Limits
GMP01SG001	4-bromofluorobenzene	186	75 – 125%
GMP02SG001	4-bromofluorobenzene	132	75 – 125%
GMP03SG001	4-bromofluorobenzene	130	75 – 125%
GMP06SG001RE	4-bromofluorobenzene	139	75 – 125%
GMP07SG002	4-bromofluorobenzene	140	75 – 125%
GMP08SG001	4-bromofluorobenzene	140	75 – 125%
GMP11SG001	4-bromofluorobenzene	142	75 – 125%
GMP12SG001	4-bromofluorobenzene	230	75 – 125%
GMP12SG002	4-bromofluorobenzene	151	75 – 125%

High percent recoveries indicate that detected results may be biased high.

II. Blank Contamination

A. Due to common laboratory contamination, the following results are considered nondetected (U4).

- acetone in samples 1R01MW16ASG001, 1R01MW18ASG001, 1R01MW366ASG001, GMP06SG001, GMP07SG001 and GMPFB001
- methylene chloride in samples 1R01MW16ASG001, 1R01MW18ASG001, 1R01MW366ASG001, 1R01MW366ASG001RE, 1R01MWI-5SG001, GMP07SG001RE, GMP01SG001, GMP02SG001, GMP03SG001, GMP04SG001, GMP05SG001, GMP06SG001, GMP06SG001RE, GMP07SG001, GMP07SG002, GMP08SG001, GMP11SG001, GMP12SG001, GMP12SG002, GMPAA001 and GMPFB001RE
- 2-butanone in samples GMP07SG001RE, GMP02SG001, GMP04SG001, GMP07SG002, GMP12SG001 and GMP12SG002

Acetone, methylene chloride and 2-butanone are considered common laboratory contaminants when found at levels less than 5x the CRQL in environmental samples and not found in the associated blanks.

B. Due to field blank contamination, the following results are considered nondetected (U2).

- toluene in samples 1R01MW366ASG001, GMP03SG001, GMP05SG001, GMP06SG001RE, GMP07SG001RE, GMP07SG002, GMP11SG001 and GMP12SG002
- ethanol in samples 1R01MW366ASG001, GMP07SG001RE, GMP01SG001 and GMP06SG001RE
- propylene in samples GMP07SG001, GMP07SG001RE and GMP07SG002
- chloromethane in samples 1R01MW366ASG001 and 1R01MW366ASG001RE
- cyclohexane in sample 1R01MW366ASG001RE
- dichlorodifluoromethane in samples GMP08SG001 and GMP11SG001
- trichlorofluoromethane in sample GMP04SG001

The following analytes were detected in the associated field blank at the concentrations noted below.

Analyte	Blank ID	Concentration, ppbv
ethanol	GMPAA001	7.6
chloromethane	GMPFB001	2.6
cyclohexane	GMPFB001	2.6
dichlorodifluoromethane	GMPFB001	3.1
hexane	GMPFB001	1.5
propylene	GMPFB001	21.5
toluene	GMPFB001	1.5
trichlorofluoromethane	GMPFB001	4.3

Detected results less than 5x the maximum blank contamination were qualified.

III. Internal Standards

A. Due to internal standard problems, the following detected and nondetected results are qualified as estimated (J0/UJ0).

- All compounds quantitated using 1,4-difluorobenzene, bromochloromethane and chlorobenzene-d5 in samples GMPAA001 and GMPFB001

The internal standard area counts in the samples listed above were less than one half of the reference standard and are listed below.

Sample	Internal Standard	Value	QC Limits
GMPAA001	bromochloromethane	171432	283990 – 1135962
	1,4-difluorobenzene	802817	1327776 – 5311104
	chlorobenzene-d5	660849	1211364 – 4845458
GMPFB001	bromochloromethane	162362	283990 – 1135962
	1,4-difluorobenzene	453871	1327776- 5311104
	chlorobenzene-d5	674450	1211364 – 4845458

Internal standard area counts of less than 50% of the standard area count may indicate a loss of instrument sensitivity.

IV. Field Duplicates

A. The following RPDs were obtained for the field duplicate samples GMP12SG001 / GMP12SG002:

- 9% for propylene
- 12% for dichlorodifluoromethane
- 9% for 1,2-dichloro-1,1,2,2-tetrafluoromethane
- 12% for vinyl chloride
- 16% for chloroethane
- 25% for ethanol
- 15% for isopropyl alcohol
- 43% for methylene chloride
- 17% for carbon disulfide
- NQ for 1,1-dichloroethane
- 21% for 2-butanone (MEK)
- NQ for cis-1,2-dichloroethene
- 17% for hexane
- 15% for benzene
- 10% for cyclohexane
- 13% for heptane
- NQ for toluene
- NQ for chlorobenzene
- 6% for ethylbenzene
- 9% for m,p-xylenes
- 23% for o-xylene
- NQ for 1,4-dichlorobenzene

The following RPDs were obtained for the field duplicate samples GMP07SG001 / GMP07SG002:

- 7% for propylene
- 6% for dichlorodifluoromethane
- 8% for 1,2-dichloro-1,1,2,2-tetrafluoromethane
- NQ% for vinyl chloride
- NQ for acetone
- 32% for methylene chloride
- NQ% for carbon disulfide
- NQ% for 2-butanone (MEK)
- 10% for hexane
- 38% for benzene
- 14% for cyclohexane
- NQ for 1,4-dioxane
- 8% for heptane
- NQ for toluene
- 0% for m,p-xylenes
- NQ% for o-xylene
- NQ for 4-ethyltoluene

- NQ for 1,2,4-trimethylbenzene
- NQ for 1,2-dichlorobenzene
- NQ for hexachlorobutadiene
- NQ for 1,2,4-trichlorobenzene

For air samples, the field RPD guideline is ± 30%. The data are not qualified on the basis of field duplicate results.

V. Other Qualifications

A. The following results are qualified as estimated (J).

- All TO-15 detected results reported below the CRQL

Detected results reported below the CRQL are considered to be qualitatively acceptable, but quantitatively unreliable due to the uncertainty in analytical precision near the limit of detection.

Full Validation Criteria for Samples 1R01MW18ASG001, GMP04SG001, GMP07SG001 and GMP08SG001

VI. GC/MS Tuning

A. The ion abundance criteria were met for the bromofluorobenzene (BFB) GC/MS performance check. The samples were analyzed within 12 hours of the associated performance check.

VII. Target Compound List (TCL) Identification

A. The relative retention times, mass spectra, and peak identifications of the samples were evaluated. Target compound identification was considered to be correct.

VIII. Compound Quantitation and Reported Detection Limits

A. Sample results were recalculated with the proper dilution factors and volumes used to calculate the sample results. The samples were found to be correctly quantitated. The reported detection limits were consistent with TtEMI's required report limits and reflect any dilutions and volumes.

IX. System Performance

A. The samples were evaluated for reconstructed ion chromatogram (RIC) baseline shifts, extraneous peaks, loss of resolution, and peak tailing. High levels of petroleum hydrocarbons were present in most samples.

EPA METHOD 3C ANALYSIS

I. Field Duplicates

A. The following RPDs were obtained for the field duplicate samples GMP07SG001 / GMP07SG002:

- 54% for oxygen
- 32% for nitrogen
- 12% for methane
- 13% for carbon dioxide

The following RPDs were obtained for the field duplicate samples GMP12SG001 / GMP12SG002:

- 44% for oxygen
- 32% for nitrogen
- 16% for methane
- 19% for carbon dioxide

For air samples, the field RPD guideline is $\pm$ 30. The data are not qualified on the basis of field duplicate results.

II. Other Qualifications

A. The following results are qualified as estimated (J).

- One detected carbon dioxide result is reported below the CRQL

Detected results reported below the CRQL are considered to be qualitatively acceptable, but quantitatively unreliable due to the uncertainty in analytical precision near the limit of detection.

Full Validation Criteria for Samples 1R01MW18ASG001, GMP04SG001, GMP07SG001 and GMP08SG001

III. Compound Quantitation and Reported Detection Limits

A. Sample results were recalculated, with the proper dilution factors and volumes used to calculate the sample results. The samples were found to be correctly quantitated. The reported detection limits were consistent with TtEMI's required report limits and reflect any dilutions and volumes.

IV. System Performance

A. The samples were evaluated for baseline shifts, extraneous peaks, loss of resolution, and peak tailing. No system degradation was noted.

EPA METHOD 25C ANALYSIS

I. Field Duplicates

A. The following RPDs were obtained for the field duplicate samples GMP07SG001 / GMP07SG002:

- 11% for NMOC

The following RPDs were obtained for the field duplicate samples GMP12SG001 / GMP12SG002:

- 28% for NMOC

For air samples, the field RPD guideline is ± 30%. The data are not qualified on the basis of field duplicate results.

Full Validation Criteria for Samples 1R01MW18ASG001, GMP04SG001, GMP07SG001 and GMP08SG001

II. Compound Quantitation and Reported Detection Limits

A. Sample results were recalculated, with the proper dilution factors and volumes used to calculate the sample results. The samples were found to be correctly quantitated. The reported detection limits were consistent with TtEMI's required report limits and reflect any dilutions and volumes.

III. System Performance

A. The samples were evaluated for baseline shifts, extraneous peaks, loss of resolution, and peak tailing. No system degradation was noted.

OVERALL ASSESSMENT OF DATA

I. Method Compliance and Additional Comments

A. Some results reported on the laboratory hardcopy do not match the electronic data deliverable (EDD) due to rounding. In addition, all nondetected results for TO-15 analyses reporting limits in the EDD do not match the laboratory hardcopy. The results reported in the EDD for methane for 1R01MW366ASG001, GMP04SG001 and GMP08SG001 and NMOC for GMP08SG001 do not match the laboratory hardcopy. The nondetected oxygen result (0.14U %) reported on the laboratory hardcopy for 1R01MW366ASG001 does not match the EDD result (0.14 %).

B. For EPA 25C analyses, methane values are crossed out and "NA" recorded on the EDD printout due to methane being obtained from EPA 3C.

II. Usability

A. Due to canister pressure problems in the TO-15 analyses, results for two samples are qualified as estimated. Due to high surrogate recovery, detected results in eight samples and one reanalysis are qualified as estimated. Due to poor internal standard response, detected and nondetected results for all target compounds quantitated using internal standards 1,4-difluorobenzene, bromochloromethane and chlorobenzene-d5 for two samples are qualified as estimated. Due to common laboratory contamination, detected methylene chloride results for seventeen samples and four reanalysis; detected acetone results for six samples; and detected 2-butanone results for five samples and one reanalysis are qualified as nondetected. Due to field blank contamination, detected toluene results for six samples and two reanalysis; detected ethanol results for two samples and two reanalysis; detected propylene results for two samples and one reanalysis; detected dichlorodifluoromethane results for two samples; detected chloromethane results for one sample and one reanalysis; the detected cyclohexane result for one reanalysis; and the trichlorofluoromethane result for one sample are qualified as nondetected.

B. Due to sample canister pressure problems in the EPA Method 3C analyses, results for GMP11SG001 are qualified as estimated.

C. Due to canister pressure problems in the EPA Method 25C analyses, results for GMP11SG001 are qualified as estimated.

D. Samples 1R01MW366ASG01, GMP06SG001, GMP07SG001 for the TO-15 analyses were reanalyzed at a lower dilution due to the original analysis being over diluted. The reanalysis of these samples should be used as the final validated results.

Samples GMPAA001 and GMPFB001 for the TO-15 analyses were reanalyzed due to a low internal standard response. The samples were reanalyzed at a higher dilution with all internal standards within limits. The reanalysis of these samples should be used as the final validated results.

E. The quality control criteria reviewed, other than those discussed above, were met and are considered acceptable. Sample results that were found to be rejected (R) are unusable for all purposes. Sample results that were found to be estimated (J) are usable for limited purposes only. Based upon the cursory and full data validation all other results are considered valid and usable for all purposes. The

high number of qualifications made to the TO-15 data indicate several matrix problems that limit the usability of the data.

DATA VALIDATION REPORT{PRIVATE }

Site: Hunters Point Shipyard, Parcel E
Nonstandard Data Gaps Investigation
Contract Task Order (CTO) No.: DO 003
Laboratory: Atmospheric Analysis & Consulting, Inc.
Data Reviewer: ETHIX
Review Date: 7/8/02

Sample Delivery Group (SDG) No.: HAN14

Sample Nos.				
	IR01MW16ASG002 *	GMP01SG003	GMP04SG002	GMP12SG003
	IR01MW16ASG002DL	GMP01SG003DL	GMP05SG002	GMP12SG003DL
	IR01MW16ASG002DL2	GMP01SG003RE	GMP06SG002	GMP12SG003DL2
	IR01MW366ASG002	GMP02SG002	GMP07SG003	GMPAA002
	IR01MW366ASG002RE	GMP02SG002DL	GMP08SG002	GMPFB002
	GMP01SG002 *	GMP02SG002DL2	GMP11SG002	
	GMP01SG002DL	GMP03SG002	GMP11SG002DL	
	GMP01SG002DL2	GMP03SG003	GMP11SG002DL2	

* Full Validation Sample

Matrix: Air

Collection Date: 5/22/02

The data were qualified according to the U.S. Environmental Protection Agency (EPA) documents "USEPA Contract Laboratory Program National Functional Guidelines for Organic Data Review" (October 1999) and "USEPA Contract Laboratory Program National Functional Guidelines For Inorganic Data Review" (February 1994). In addition, the Tetra Tech EM Inc. (TtEMI) documents "Data Validation Guidelines for CLP Organic Analyses," "Data Validation Guidelines for CLP Inorganic Analyses," "Data Validation Guidelines for Non-CLP Organic Analyses," "Data Validation Guidelines for Non-CLP Inorganic and Physical Analyses" (August 1, 2001), and the document entitled “TtEMI Comprehensive Long-term Environmental Action Navy II Analytical Services Statement of Work” (May 2000) were used along with other specified criteria in EPA methods. Data validation requirements are presented on page 2.

I certify that all data validation criteria outlined in the above referenced documents were assessed, and any qualifications made to the data were in accordance with those documents.

Certified by

DATA VALIDATION REQUIREMENTS

Full validation includes all parameters listed below. Cursory validation parameters are indicated by an asterisk (*).

CLP Organic Parameters

* Holding times
  GC/MS instrument performance check
* Initial and continuing calibrations
* Blanks
* Surrogate recovery
* Matrix spike/matrix spike duplicate
* Laboratory control sample or blank spike *
* Field duplicates
* Internal standard performance
  Target compound identification
  Tentatively identified compounds
  Compound quantitation
  Reported detection limits
  System performance
* Overall assessment of data for the SDG

CLP Inorganic Parameters

* Holding times
* Initial and continuing calibrations
* Blanks
* Matrix spike
* Laboratory control sample or blank spike
Field duplicates
* Matrix duplicates
  ICP interference check sample
  GFAA quality control
* ICP serial dilution
  Sample result verification
  Analyte quantitation
  Reported detection limits
* Overall assessment of data for the SDG

Non-CLP Organic and Inorganic Parameters

* Method compliance
* Holding times
* Initial and continuing calibrations
* Blanks
* Matrix spike/matrix spike duplicate
* Laboratory control sample or blank spike
* Field duplicates
* Matrix duplicates
* Surrogate recovery
  Analyte quantitation
  Reported detection limits
* Overall assessment of data for the SDG

DATA VALIDATION QUALIFIERS AND CODES

Data Validation Qualifiers and Codes

U1	Compound is nondetected due to laboratory blank contamination
U2	Compound is nondetected due to field blank contamination
U4	Compound is nondetected because of common laboratory contamination
J0	Compound is estimated due to internal standard exceedance
J1	Compound is estimated due to noncompliant instrument performance criteria
J2	Compound is estimated due to laboratory duplicate precision exceedance
J3	Compound is estimated due to surrogate/LCS/MS exceedance
J4	Compound is estimated due to serial dilution exceedance
J5	Compound is estimated due to holding time exceedance
J6	Compound is estimated due to field duplicate precision exceedance
J7	Compound is estimated due to calibration exceedance
J8	Compound is estimated due to calibration range exceedance
J9	Compound is estimated due to interference check exceedance (metals) or confirmation problems (dual column analyses)
UJ9	Compound is nondetected and estimated due to confirmation problems (dual column analyses)
R0	Compound is rejected due to internal standard exceedance
R1	Compound is rejected due to holding time exceedance
R2	Compound is rejected due to surrogate/LCS/MS exceedance
R3	Compound is rejected due to noncompliant instrument performance criteria
R7	Compound is rejected due to calibration exceedance

TABLE 1
CURSORY DATA VALIDATION SUMMARY

Analysis{PRIVATE}	Holding Times	Surrogates	MS/MSD	Matrix Duplicates	LCS	Blanks	Calibrations	Internal Standards	Field Duplicates	Other
TO-15	✓	Pg. 6	✓	N/A	✓	Pg. 7	✓	Pg. 8	Pg. 10	Pg. 11
EPA 3C	✓	N/A	✓	N/A	✓	✓	✓	N/A	Pg. 13	✓
EPA 25C	✓	N/A	✓	N/A	✓	✓	✓	N/A	Pg. 14	N/A

Notes:
✓ indicates that all quality control criteria were met for the parameter as specified in the prescribed methods and data validation guidelines.
N/A indicates the parameter is not applicable to an analysis.
If criteria were not met and the data were qualified, a page number is indicated where the qualification is detailed.
The data were evaluated for all validation criteria and were found to be in control except where noted. Any outliers are described in the text.

TABLE 2
FULL DATA VALIDATION SUMMARY
Samples IR01MW16ASG002 and GMP01SG002

Analysis{PRIVATE }	GC/MS Tuning	Target Compound List Identification	Compound or Analyte Quantification	Reported Detection Limits	Tentatively Identified Compounds	System Performance	Interference Check Sample	Graphite Furnace Quality Control
TO-15	✓	✓	✓	✓	N/A	✓	N/A	N/A
EPA 3C	N/A	N/A	✓	✓	N/A	✓	N/A	N/A
EPA 25C	N/A	N/A	✓	✓	N/A	✓	N/A	N/A

Notes:
✓ indicates that all quality control criteria were met for the parameter as specified in the prescribed methods and data validation guidelines.
N/A indicates the parameter is not applicable to an analysis.
If criteria were not met and the data were qualified, a page number is indicated where the qualification is detailed.
The data were evaluated for all validation criteria and were found to be in control except where noted. Any outliers found are described below.

DATA ASSESSMENT

TO-15 ANALYSIS

I. Surrogate Recovery

A. Due to surrogate recovery problems, the following detected results are qualified as estimated (J3).

- Detected results for all target compounds in samples IR01MW16ASG002, IR01MW16ASG002DL, IR01MW366ASG002RE, GMP01SG002, GMP01SG002DL, GMP01SG002DL2, GMP01SG003, GMP01SG003DL, GMP01SG003RE, GMP02SG002, GMP02SG002DL, GMP02SG002DL2, GMP03SG002, GMP03SG003, GMP04SG002, GMP05SG002, GMP06SG002, GMP07SG003, GMP08SG002, GMP11SG002, GMP11SG002DL, GMP11SG002DL2, GMP12SG003, GMP12SG003DL, GMP12SG003DL2

The surrogates outside of QC limits are listed below.

Sample ID	Surrogate	% R	QC Limits
IR01MW16ASG002	4-bromofluorobenzene	260	75 – 125%
IR01MW16ASG002DL	4-bromofluorobenzene	130	75 – 125%
IR01MW366ASG002RE	4-bromofluorobenzene	130	75 – 125%
GMP01SG002	4-bromofluorobenzene	740	75 – 125%
GMP01SG002DL	4-bromofluorobenzene	580	75 – 125%
GMP01SG002DL2	4-bromofluorobenzene	260	75 – 125%
GMP01SG003	4-bromofluorobenzene	980	75 – 125%
GMP01SG003DL	4-bromofluorobenzene	270	75 – 125%
GMP01SG003RE	4-bromofluorobenzene	550	75 – 125%
GMP02SG002	4-bromofluorobenzene	550	75 – 125%
GMP02SG002DL	4-bromofluorobenzene	190	75 – 125%
GMP02SG002DL2	4-bromofluorobenzene	200	75 – 125%
GMP03SG002	4-bromofluorobenzene	260	75 – 125%
GMP03SG003	4-bromofluorobenzene	240	75 – 125%
GMP04SG002	4-bromofluorobenzene	220	75 – 125%
GMP05SG002	4-bromofluorobenzene	190	75 – 125%
GMP06SG002	4-bromofluorobenzene	180	75 – 125%
GMP07SG003	4-bromofluorobenzene	140	75 – 125%
GMP08SG002	4-bromofluorobenzene	260	75 – 125%
GMP11SG002	4-bromofluorobenzene	320	75 – 125%
GMP11SG002DL	4-bromofluorobenzene	270	75 – 125%
GMP11SG002DL2	4-bromofluorobenzene	360	75 – 125%
GMP12SG003	4-bromofluorobenzene	860	75 – 125%
GMP12SG003DL	4-bromofluorobenzene	530	75 – 125%
GMP12SG003DL2	4-bromofluorobenzene	440	75 – 125%

High percent recoveries indicate that detected results may be biased high.

II. Blank Contamination

A. Due to common laboratory contamination, the following results are considered nondetected (U4).

- methylene chloride in samples IR01MW16ASG002DL, IR01MW366ASG002, GMP01SG002, GMP01SG002DL, GMP01SG002DL2, GMP01SG003, GMP01SG003DL, GMP01SG003RE, GMP02SG002, GMP02SG002DL, GMP02SG002DL2, GMP03SG002, GMP03SG003, GMP04SG002, GMP05SG002, GMP06SG002, GMP07SG003, GMP08SG002, GMP11SG002, GMP11SG002DL, GMP11SG002DL2, GMP12SG003, GMP12SG003DL, GMP12SG003DL2, GMPAA002 and GMPFB002
- 2-butanone in sample GMPAA002
- acetone in sample GMP02SG002DL

Acetone, methylene chloride and 2-butanone are considered common laboratory contaminants when found at levels less than 5x the CRQL in environmental samples and not found in the associated blanks.

B. Due to field blank contamination, the following results are considered nondetected (U2).

- 1,1,2-trichloro-1,2,2-trifluoromethane in samples IR01MW16ASG002, IR01MW16ASG002DL, IR01MW16ASG002DL2, GMP01SG002DL, GMP01SG002DL2, GMP01SG003DL, GMP01SG003RE, GMP02SG002, GMP02SG002DL, GMP02SG002DL2, GMP03SG002, GMP03SG003, GMP04SG002, GMP05SG002, GMP06SG002, GMP07SG003, GMP08SG002, GMP11SG002DL, GMP11SG002DL2, GMP12SG003DL and GMP12SG003DL2
- toluene in samples GMP02SG002, GMP02SG002DL, GMP02SG002DL2, GMP03SG002, GMP03SG003, GMP04SG002, GMP05SG002, GMP06SG002, GMP07SG003, GMP08SG002, GMP11SG002DL, GMP11SG002DL2, GMP12SG003, GMP12SG003DL and GMP12SG003DL2
- m,p-xylenes in samples GMP05SG002, GMP07SG003, GMP11SG002, GMP11SG002DL, GMP12SG003, GMP12SG003DL and GMP12SG003DL2
- acetone and hexane in samples IR01MW366ASG002 and IR01MW366ASG002RE
- methylene chloride in sample IR01MW16ASG002

The following analytes were detected in the associated field blank at the concentrations noted below.

Analyte	Blank ID	Concentration, ppbv
1,1,2-trichloro-1,2,2-trifluoromethane	GMPAA002	2.6
toluene	GMPAA002	3.6
m,p-xylenes	GMPAA002	2.3
acetone	GMPAA002	25
hexane	GMPAA002	2
methylene chloride	GMPAA002	3.5

Detected results less than 5x the maximum blank contamination were qualified.

III. Internal Standards

A. Due to severe internal standard problems, the following detected results are qualified as estimated and the nondetected results are rejected (J0/R0).

- All compounds quantitated using chlorobenzene-d5 in sample IR01MW16ASG002DL2

The internal standard area count in the sample listed above was less than 10% of the reference standard and is listed below.

Sample	Internal Standard	Value	QC Limits
IR01MW16ASG002DL2	chlorobenzene-d5	147003	1054500 - 4218000

Internal standard area counts of less than 10% of the standard area count may indicate a severe loss in instrument sensitivity.

B. Due to internal standard problems, the following detected and nondetected results are qualified as estimated (J0/UJ0).

- All compounds quantitated using bromochloromethane, 1,4-difluorobenzene and chlorobenzene-d5 in samples GMP01SG002DL2, GMP02SG002DL, GMP02SG002DL2, IR01MW16ASG002DL, GMP11SG002DL, GMP11SG002DL2, GMP12SG003DL, GMP12SG003DL2
- All compounds quantitated using chlorobenzene-d5 in samples GMP01SG002, GMP01SG002DL, GMP01SG003, GMP02SG002 and GMP12SG003
- All compounds quantitated using bromochloromethane and chlorobenzene-d5 in samples GMP01SG003DL and GMP01SG003RE
- All compounds quantitated using bromochloromethane and 1,4-difluorobenzene in samples IR01MW16ASG002DL2 and IR01MW366ASG002RE

The internal standard area counts in the samples listed above were less than one half of the reference standard and are listed below.

Sample	Internal Standard	Value	QC Limits
GMP12SG003	chlorobenzene-d5	1019642	1051599 – 4206398
GMP01SG002	chlorobenzene-d5	856329	1051599 – 4206398
GMP01SG003	chlorobenzene-d5	831587	1051599 – 4206398
GMP02SG002	chlorobenzene-d5	1025024	1051599 – 4206398
GMP11SG002DL	bromochloromethane	316752	355713 – 1422854
	1,4-difluorobenzene	1116942	1272035 – 5088142
	chlorobenzene-d5	951802	1039193 – 4156774
Sample	Internal Standard	Value	QC Limits
GMP11SG002DL2	bromochloromethane	267089	358241 – 1432964
	1,4-difluorobenzene	821610	1238860 – 4955440
	chlorobenzene-d5	546152	1054500 – 4218000
GMP12SG003DL	bromochloromethane	337257	355713 – 1422854
	1,4-difluorobenzene	1199017	1272035 – 5088142

	chlorobenzene-d5	830990	1039193 – 4156774
GMP12SG003DL2	bromochloromethane	281392	358241 – 1432964
	1,4-difluorobenzene	929327	1238860 – 4955440
	chlorobenzene-d5	547034	1054500 – 4218000
GMP01SG002DL	chlorobenzene-d5	875538	1039193 – 4156774
GMP01SG003DL	bromochloromethane	333445	355713 – 1422854
	chlorobenzene-d5	825361	1039193 – 4156774
GMP01SG003RE	bromochloromethane	330271	358241 – 1432964
	chlorobenzene-d5	945736	1054500 – 4218000
GMP02SG002DL	bromochloromethane	325085	355713 – 1422854
	1,4-difluorobenzene	1214707	1272035 – 5088142
	chlorobenzene-d5	1017524	1039193 – 4156774
GMP02SG002DL2	bromochloromethane	318905	358241 – 1432964
	1,4-difluorobenzene	1245176	1238860 – 4955440
	chlorobenzene-d5	1048960	1054500 – 4218000
IR01MW366ASG002RE	bromochloromethane	351892	355713 – 1422854
	1,4-difluorobenzene	1172276	1272035 – 5088142
IR01MW16ASG002DL	bromochloromethane	319295	355713 – 1422854
	1,4-difluorobenzene	1105459	1272035 – 5088142
	chlorobenzene-d5	949178	1039193 – 4156774
IR01MW16ASG002DL2	bromochloromethane	200321	358241 – 1432964
	1,4-difluorobenzene	641348	1238860 – 4955440
GMP01SG002DL2	bromochloromethane	314373	358241 – 1432964
	1,4-difluorobenzene	1203886	1238860 – 4955440
	chlorobenzene-d5	853227	1054500 – 4218000

Internal standard area counts of less than 50% of the standard area count may indicate a loss of instrument sensitivity.

IV. Field Duplicates

A. The following RPDs were obtained for the field duplicate samples GMP01SG002 / GMP01SG003:

- 3% for propylene
- 32% for dichlorodifluoromethane
- NQ for chloromethane
- 0% for 1,2-dichloro-1,1,2,2-tetrafluoroethane

- 21% for vinyl chloride
- 11% for chloroethane
- 18% for methylene chloride
- NQ for carbon disulfide
- 10% for t-1,2-dichloroethylene
- 18% for 1,1-dichloroethane
- 11% for cis-1,2-dichloroethene
- 10% for hexane
- NQ for 1,2-dichloroethane
- 27% for benzene
- 5% for cyclohexane
- NQ for 1,2-dichloropropane
- 24% for trichloroethene
- 23% for heptane
- 45% for toluene
- 22% for tetrachloroethylene
- 11% for chlorobenzene
- 42% for ethylbenzene
- 44% for m,p-xylenes
- NQ for styrene
- 31% for o-xylene
- 33 % for 4-ethyltoluene
- 36% for 1,3,5-trimethylbenzene
- 30% for 1,2,4-trimethylbenzene
- 23% for 1,3-dichlorobenzene
- 8% for 1,4-dichlorobenzene
- 7% for 1,2-dichlorobenzene

B. The following RPDs were obtained for the field duplicate samples GMP03SG002 / GMP03SG003:

- 4% for propylene
- 0% for dichlorodifluoromethane
- NQ for chloromethane
- 9% for 1,2-dichloro-1,1,2,2-tetrafluoroethane
- 7% for vinyl chloride
- 53% for bromomethane
- 9% for chloroethane
- 40% for trichlorofluoromethane
- 46% for 1,1-dichloroethylene
- 18% for methylene chloride
- 22% for carbon disulfide
- 27% for 1,1,2-trichloro-1,2,2-trifluoroethane
- 26% for t-1,2-dichloroethylene
- 33% for 1,1-dichloroethane
- 14% for cis-1,2-dichloroethene
- 0% for hexane
- 36% for chloroform
- 63% for 1,2-dichloroethane

- 52% for 1,1,1-trichloroethane
- 4% for benzene
- 49% for carbon tetrachloride
- 2% for cyclohexane
- 39% for trichloroethene
- 1% for heptane
- 40% for cis-1,3-dichloropropene
- 43% for t-1,3-dichloropropene
- 29% for toluene
- 41% for 1,2-dibromomethane
- 29% for tetrachloroethylene
- 0% for chlorobenzene
- 18% for ethylbenzene
- 26% for m,p-xylenes
- 17% for o-xylene
- 26% for 4-ethyltoluene
- 20% for 1,3,5-trimethylbenzene
- 14% for 1,2,4-trimethylbenzene
- 26% for 1,3-dichlorobenzene
- 7% for 1,4-dichlorobenzene
- 15% for 1,2-dichlorobenzene
- 16% for 1,2,4-trichlorobenzene
- 25% for hexachlorobutadiene

For air samples, the field RPD guideline is $\pm$ 30%. The data are not qualified on the basis of field duplicate results.

V. Other Qualifications

A. The following results are qualified as estimated (J).

- All TO-15 detected results reported below the CRQL

Detected results reported below the CRQL are considered to be qualitatively acceptable, but quantitatively unreliable due to the uncertainty in analytical precision near the limit of detection.

B. The following detected results are qualified as estimated (J8) due to calibration range exceedance.

- cyclohexane in samples GMP01SG002 and GMP12SG003
- propylene in samples IR01MW16ASG002 and GMP02SG002
- heptane in sample IR01MW16ASG002
- hexane in sample GMP12SG003

Analytes detected at concentrations exceeding the calibration range are quantitatively unreliable. Samples listed above were appropriately diluted and reanalyzed.

Full Validation Criteria for Samples IR01MW16ASG002 and GMP01SG002

VI. GC/MS Tuning

A. The ion abundance criteria were met for the bromofluorobenzene (BFB) GC/MS performance check. The samples were analyzed within 12 hours of the associated performance check.

VII. Target Compound List (TCL) Identification

A. The relative retention times, mass spectra, and peak identifications of the samples were evaluated. Target compound identification was considered to be correct; however, matrix interference in the retention time region of 20 to 30 minutes was observed due to high petroleum hydrocarbon content in all field samples.

VIII. Compound Quantitation and Reported Detection Limits

A. Sample results were recalculated with the proper dilution factors and volumes used to calculate the sample results. The samples were found to be correctly quantitated. The reported detection limits were consistent with TtEMI's required report limits and reflect any dilutions and volumes.

IX. System Performance

A. The samples were evaluated for reconstructed ion chromatogram (RIC) baseline shifts, extraneous peaks, loss of resolution, and peak tailing. An abrupt baseline drop was observed at approximately 12 minutes into the analytical run in all samples and associated QC.

EPA METHOD 3C ANALYSIS

All cursory requirements were met by this method.

I. Field Duplicates

A. The following RPDs were obtained for the field duplicate samples GMP01SG002 / GMP01SG003:

- 26% for oxygen
- 5% for nitrogen
- 7% for methane
- 0% for carbon dioxide

B. The following RPDs were obtained for the field duplicate samples GMP03SG002 / GMP03SG003:

- 38% for oxygen
- 10% for nitrogen
- 2% for methane
- 0% for carbon dioxide

For air samples, the field RPD guideline is $\pm$ 30. The data are not qualified on the basis of field duplicate results.

Full Validation Criteria for Samples IR01MW16ASG002 and GMP01SG002

II. Compound Quantitation and Reported Detection Limits

A. Sample results were recalculated, with the proper dilution factors and volumes used to calculate the sample results. The samples were found to be correctly quantitated. The reported detection limits were consistent with TtEMI's required report limits and reflect any dilutions and volumes.

III. System Performance

A. The samples were evaluated for baseline shifts, extraneous peaks, loss of resolution, and peak tailing. No system degradation was noted.

EPA METHOD 25C ANALYSIS

All cursory requirements were met by this method.

I. Field Duplicates

A. The following RPDs were obtained for the field duplicate samples GMP01SG002 / GMP01SG003:

- 2% for NMOC

B. The following RPDs were obtained for the field duplicate samples GMP03SG002 / GMP03SG003:

- 0% for NMOC

For air samples, the field RPD guideline is ± 30%. The data are not qualified on the basis of field duplicate results.

Full Validation Criteria for Samples IR01MW16ASG002 and GMP01SG002

II. Compound Quantitation and Reported Detection Limits

A. Sample results were recalculated, with the proper dilution factors and volumes used to calculate the sample results. The samples were found to be correctly quantitated. The reported detection limits were consistent with TtEMI's required report limits and reflect any dilutions and volumes.

III. System Performance

A. The samples were evaluated for baseline shifts, extraneous peaks, loss of resolution, and peak tailing. No system degradation was noted.

OVERALL ASSESSMENT OF DATA

I. Method Compliance and Additional Comments

A. The acetone result reported in the EDD (Electronic Data Deliverable) for sample GMP11SG002 in the TO-15 analyses and the carbon monoxide result for sample GMP02SG002 in the EPA 3C analyses does not match the laboratory hardcopy. The reporting limits in the EDD for sample GMP12SG003 in the TO-15 analyses, and the reporting limit for NMOC for sample GMP02SG002 in the EPA 25C analyses do not match the laboratory hardcopy.

B. Analysis dates that are reported on the laboratory hardcopy Form Is are incorrect for the TO-15 analysis. The dates are reported 1 to 2 days earlier than the actual analysis date.

C. The field blank was used as a matrix spike/matrix spike duplicate sample.

D. IDs on hardcopy that begin with "1" should be "I".

II. Usability

A. Due to poor internal standard response in the TO-15 analyses, nondetected results for all target compounds quantitated using internal standard chlorobenzene-d5 in the secondary dilution of IR01MW16ASG002 are rejected.

E. Due to high surrogate recovery in the TO-15 analyses, detected results for thirteen original analyses, six dilutions and four secondary dilutions are qualified as estimated. Due to poor internal standard response, detected and nondetected results for all target compounds quantitated using internal standard chlorobenzene-d5 for original analyses, six dilutions, four secondary dilutions, and one reanalysis; detected and nondetected results for all target compounds quantitated using internal standard bromochloromethane for five dilutions, five secondary dilutions, and two reanalyses; and detected and nondetected results for all target compounds quantitated using internal standard 1,4-difluorobenzene for four dilutions, five secondary dilutions, and one reanalysis are qualified as estimated. Due to common laboratory contamination, detected methylene chloride results for fifteen original analyses, six dilutions, four secondary dilutions, and one reanalysis; the detected 2-butanone result for one sample; and the detected acetone result for one dilution are qualified as nondetected. Due to field blank contamination, detected 1,1,2-trichloro-1,2,2-trifluoroethane results for nine original analyses, six dilutions, five secondary dilutions, and one reanalysis; detected toluene results for nine original analyses, three dilutions, and three secondary dilutions; detected m,p-xylenes results for four original analyses, two dilutions and one secondary dilution; detected acetone and hexane results for one original analysis and one reanalysis; and the detected methylene chloride result for one original analysis are qualified as nondetected.

F. Samples IR01MW16ASG002 (diluted twice), GMP01SG002 (diluted twice), GMP01SG003, GMP02SG002 (diluted twice), GMP11SG002 (diluted twice), and GMP12SG003 (diluted twice) were diluted and reanalyzed for the TO-15 analysis due to low internal standard response for chlorobenzene-d5. All or most internal standards were out in the dilutions; therefore, the original analyses should be used as the final validated results due to fewer qualifications.

D. The quality control criteria reviewed, other than those discussed above, were met and are considered acceptable. Sample results that were found to be rejected (R) are unusable for all purposes. Sample results that were found to be estimated (J) are usable for limited purposes only. Based upon the cursory and full data validation all other results are considered valid and usable for all purposes. In general, the absence of qualifiers added to the EPA3C and EPA25C data indicates high usability. The high number of qualifications made to the TO-15 data indicate matrix problems that limit the usability of the data.

DATA VALIDATION REPORT{PRIVATE }

Site: Hunters Point Shipyard, Parcel E
Nonstandard Data Gaps Investigation
Contract Task Order (CTO) No.: DO 003
Laboratory: Atmospheric Analysis & Consulting, Inc.
Data Reviewer: ETHIX
Review Date: 7/8/02

Sample Delivery Group (SDG) No.: HAN15

Sample Nos. GMP05MER001 GMP06MER001 * GMP12MER001

* Full Validation Sample

Matrix: Air

Collection Date: 6/5/02

The data were qualified according to the U.S. Environmental Protection Agency (EPA) documents "USEPA Contract Laboratory Program National Functional Guidelines for Organic Data Review" (October 1999) and "USEPA Contract Laboratory Program National Functional Guidelines For Inorganic Data Review" (February 1994). In addition, the Tetra Tech EM Inc. (TtEMI) documents "Data Validation Guidelines for CLP Organic Analyses," "Data Validation Guidelines for CLP Inorganic Analyses," "Data Validation Guidelines for Non-CLP Organic Analyses," "Data Validation Guidelines for Non-CLP Inorganic and Physical Analyses" (August 1, 2001), and the document entitled "TtEMI Comprehensive Long-term Environmental Action Navy II Analytical Services Statement of Work" (May 2000) were used along with other specified criteria in EPA methods. Data validation requirements are presented on page 2.

I certify that all data validation criteria outlined in the above referenced documents were assessed, and any qualifications made to the data were in accordance with those documents.

Certified by

DATA VALIDATION REQUIREMENTS

Full validation includes all parameters listed below. Cursory validation parameters are indicated by an asterisk (*).

CLP Organic Parameters

* Holding times
  GC/MS instrument performance check
* Initial and continuing calibrations
* Blanks
* Surrogate recovery
* Matrix spike/matrix spike duplicate
* Laboratory control sample or blank spike *
* Field duplicates
* Internal standard performance
  Target compound identification
  Tentatively identified compounds
  Compound quantitation
  Reported detection limits
  System performance
* Overall assessment of data for the SDG

CLP Inorganic Parameters

* Holding times
* Initial and continuing calibrations
* Blanks
* Matrix spike
* Laboratory control sample or blank spike
Field duplicates
* Matrix duplicates
  ICP interference check sample
  GFAA quality control
* ICP serial dilution
  Sample result verification
  Analyte quantitation
  Reported detection limits
* Overall assessment of data for the SDG

Non-CLP Organic and Inorganic Parameters

* Method compliance
* Holding times
* Initial and continuing calibrations
* Blanks
* Matrix spike/matrix spike duplicate
* Laboratory control sample or blank spike
* Field duplicates
* Matrix duplicates
* Surrogate recovery
  Analyte quantitation
  Reported detection limits
* Overall assessment of data for the SDG

DATA VALIDATION QUALIFIERS AND CODES

Data Validation Qualifiers and Codes

U1	Compound is nondetected due to laboratory blank contamination
U2	Compound is nondetected due to field blank contamination
U4	Compound is nondetected because of common laboratory contamination
J0	Compound is estimated due to internal standard exceedance
J1	Compound is estimated due to noncompliant instrument performance criteria
J2	Compound is estimated due to laboratory duplicate precision exceedance
J3	Compound is estimated due to surrogate/LCS/MS exceedance
J4	Compound is estimated due to serial dilution exceedance
J5	Compound is estimated due to holding time exceedance
J6	Compound is estimated due to field duplicate precision exceedance
J7	Compound is estimated due to calibration exceedance
J8	Compound is estimated due to calibration range exceedance
J9	Compound is estimated due to interference check exceedance (metals) or confirmation problems (dual column analyses)
UJ9	Compound is nondetected and estimated due to confirmation problems (dual column analyses)
R0	Compound is rejected due to internal standard exceedance
R1	Compound is rejected due to holding time exceedance
R2	Compound is rejected due to surrogate/LCS/MS exceedance
R3	Compound is rejected due to noncompliant instrument performance criteria
R7	Compound is rejected due to calibration exceedance

TABLE 1
CURSORY DATA VALIDATION SUMMARY

Analysis{PRIVATE }	Holding Times	Surrogates	MS/MSD	Matrix Duplicates	LCS	Blanks	Calibration	Internal Standards	Field Duplicates	Other
TO-15	✓	Pg. 6	✓	N/A	✓	✓	✓	✓	N/A	N/A

Notes:
✓ indicates that all quality control criteria were met for the parameter as specified in the prescribed methods and data validation guidelines.
N/A indicates the parameter is not applicable to an analysis.
If criteria were not met and the data were qualified, a page number is indicated where the qualification is detailed.
The data were evaluated for all validation criteria and were found to be in control except where noted. Any outliers are described in the text.

TABLE 2
FULL DATA VALIDATION SUMMARY
Sample GMP06MER001

Analysis{PRIVATE }	GC/MS Tuning	Target Compound List Identification	Compound or Analyte Quantification	Reported Detection Limits	Tentatively Identified Compounds	System Performance	Interference Check Sample	Graphite Furnace Quality Control
TO-15	✓	✓	✓	✓	N/A	✓	N/A	N/A

Notes:
✓ indicates that all quality control criteria were met for the parameter as specified in the prescribed methods and data validation guidelines.
N/A indicates the parameter is not applicable to an analysis.
If criteria were not met and the data were qualified, a page number is indicated where the qualification is detailed.
The data were evaluated for all validation criteria and were found to be in control except where noted. Any outliers found are described below.

DATA ASSESSMENT

TO-15 ANALYSIS

I. Surrogate Recovery

A. Due to surrogate recovery problems, the following detected results are qualified as estimated (J3).

- Tert-butyl mercaptan in samples GMP06MER001 and GMP12MER001

The surrogates outside of QC limits are listed below.

Sample ID	Surrogate	% R	QC Limits
GMP06MER001	4-bromofluorobenzene	140	75 – 125%
GMP12MER001	4-bromofluorobenzene	270	75 – 125%

High percent recoveries indicate that detected results may be biased high.

II. Field Duplicates

A. Field duplicate samples were not collected for this method.

Full Validation Criteria for Sample GMP06MER001

III. GC/MS Tuning

A. The ion abundance criteria were met for the bromofluorobenzene (BFB) GC/MS performance check. The sample was analyzed within 12 hours of the associated performance check.

IV. Target Compound List (TCL) Identification

A. The relative retention times, mass spectra, and peak identifications of the sample were evaluated. Target compound identification was considered to be correct.

V. Compound Quantitation and Reported Detection Limits

A. Sample results were recalculated with the proper dilution factors and volumes used to calculate the sample results. The sample was found to be correctly quantitated. Project specific report limits were not specified for this method. The reported report limits reflect any dilutions and volumes used.

VI. System Performance

A. The sample was evaluated for reconstructed ion chromatogram (RIC) baseline shifts, extraneous peaks, loss of resolution, and peak tailing. No system degradation was noted.

OVERALL ASSESSMENT OF DATA

I. Method Compliance and Additional Comments

A. All analyses were conducted within all specifications of the requested method.

II. Usability

A. Due to high surrogate recovery in the TO-15 analyses, detected tert-butyl mercaptan results for two samples are qualified as estimated.

B. The quality control criteria reviewed, other than those discussed above, were met and are considered acceptable. Sample results that were found to be rejected (R) are unusable for all purposes. Sample results that were found to be estimated (J) are usable for limited purposes only. Based upon the cursory and full data validation all other results are considered valid and usable for all purposes. In general, the absence of qualifications made to the tetrahydrothiophene data indicates high usability. The high number of qualifications made to the t-butyl mercaptan data indicate matrix problems that limit the usability of the data.

DATA VALIDATION REPORT

Site:	Hunters Point Shipyard, HPS, DO 003 Data Gaps Investigation
Contract Task Order (CTO) No.:	G90190030301020711
Laboratory:	Atmospheric Analysis & Consulting, Inc.
Data Reviewer:	Richard Amano, Stacey Mavrakos, Erlinda Rauto, and Pei Geng.
Firm/Proj. No:	Laboratory Data Consultants, Inc./9024A
Review Date:	September 6 through September 9, 2002
Sample Delivery Group (SDG) No.:	HAN17

Sample Nos.:

GMP08SG003*	GMP02SG003DL*	1R01MW16ASG0003DL	GMP03SG004MSD
GMP08SG003DL*	GMP11SG003	1R01MW18ASG002	SGCSSG003MS
GMP07SG004	GMP11SG004	1R01MW18ASG002DL	SGCSSG003MSD
GMP06SG003	GMP11SG004RE	GMP08SG003MS	1R01MW366ASG003DUP
GMPFB004	SGLPSG002	GMP08SG003MSD	GMP06SG003DUP
GMP12SG004	SGCSSG003*	GMP08SG003DUP	GMPFB004MS
GMP01SG004*	1R01MW366ASG003	1R01MW366ASG004MS	GMPFB004MSD
GMP05SG003	1R01MW366ASG004	1R01MW366ASG004MSD	GMP11SG003DUP
GMP04SG003	1R01MWI-5SG002	1R01MW366ASG004DUP	SGLPSG002MS
GMP03SG004	1R01MWI-5SG002DL	GMP07SG004DUP	SGLPSG002MSD
GMP02SG003*	1R01MW16ASG0003	GMP03SG004MS	GMP12SG004DUP

* Full Validation Sample

Matrix: Air

Collection Date(s): July 31 through August 1, 2002

The data were qualified according to the U.S. Environmental Protection Agency (EPA) documents "USEPA Contract Laboratory Program National Functional Guidelines for Organic Data Review" (October 1999). In addition, the Tetra Tech EMI, Inc. documents "Data Validation Guidelines for CLP Organic Analyses," "Data Validation Guidelines for Non-CLP Organic Analyses" (March 1997), and the document entitled "PRC Comprehensive Long-term Environmental Action Navy II Analytical Services Statement of Work" (September 1998) were used along with other specified criteria in EPA methods. Data validation requirements are presented below.

I certify that all data validation criteria outlined in the above referenced documents were assessed, and any qualifications made to the data were in accordance with those documents.

Certified by Richard Amano
Principal Chemist

DATA VALIDATION REQUIREMENTS

Full validation includes all parameters listed below. Cursory validation parameters are indicated by an asterisk (*).

CLP Organic Parameters

*	Holding times
	GC/MS instrument performance check
*	Initial and continuing calibrations
*	Blanks
*	Surrogate recovery
*	Matrix spike/matrix spike duplicate
*	Laboratory control sample or blank spike
*	Field duplicates
*	Internal standard performance
	Target compound identification
	Tentatively identified compounds
	Compound quantitation
	Reported detection limits
	System performance
*	Overall assessment of data for the SDG

CLP Inorganic Parameters

*	Holding times
*	Initial and continuing calibrations
*	Blanks
*	Matrix spike
*	Laboratory control sample or blank spike
*	Field duplicates
*	Matrix duplicates
	ICP interference check sample
	GFAA quality control
*	ICP serial dilution
	Sample result verification
	Analyte quantitation
	Reported detection limits
*	Overall assessment of data for the SDG

Non-CLP Organic and Inorganic Parameters

*	Method compliance
*	Holding times
*	Initial and continuing calibrations
*	Blanks
*	Matrix spike/matrix spike duplicate
*	Laboratory control sample or blank spike
*	Field duplicates
*	Matrix duplicates
*	Surrogate recovery
	Analyte quantitation
	Reported detection limits
*	Overall assessment of data for the SDG

DATA VALIDATION QUALIFIERS AND CODES

Data Validation Qualifiers

UJ Estimated nondetected result

J Estimated detected result

R Rejected result

NJ Tentatively Identified Compound (TIC)

Data Validation Qualifier Codes

J1/R3 System performance

J2 Duplicate precision exceedance

J3/R2 Matrix spike, laboratory control sample (LCS), surrogate recovery exceedance

J4 Serial dilution

J5/R1 Holding time exceedance

J7/R7 Calibration exceedance

J8 Compound above calibration range

J9 ICP interference check sample

J0 Internal standard exceedance

U1 Laboratory blank contamination

U2 Field blank contamination

U4 Common laboratory contamination

G, D, M, L, H, Z TPH qualifiers

TABLE 1
SAMPLE CROSS REFERENCE TABLE
SAMPLE DELIVERY GROUP HAN17

Sample ID	Matrix	Date Collected	Quality Control ID	Validation Criteria*	Analyses												
					VOC (TO15)	TO-3C	TO-25C										
GMP08SG003	Air	7/31/02	MS/MSD/DUP	Full	X	X	X										
GMP07SG004	Air	7/31/02	DUP**		X	X**	X**										
GMP06SG003	Air	7/31/02	DUP**		X	X	X**										
GMPFB004	Air	7/31/02	MS/MSD**		X	X	X**										
GMP12SG004	Air	7/31/02	Field Blank		X	X	X										
GMP01SG004	Air	7/31/02		Full	X	X	X										
GMP05SG003	Air	7/31/02			X	X	X										
GMP04SG003	Air	7/31/02			X	X	X										
GMP03SG004	Air	7/31/02	MS/MSD**		X	X**	X										
GMP02SG003	Air	7/31/02	DUP**	Full	X	X**	X										
GMP11SG003	Air	7/31/02	Field Duplicate of GMP11SG003, DUP**		X	X	X**										
GMP11SG004	Air	7/31/02			X	X	X										
SGLPSG002	Air	8/1/02	MS/MSD**		X	X	X**										
SGCSSG003	Air	8/1/02	MS/MSD**	Full	X	X**	X**										
1R01MW366ASG003	Air	8/1/02	DUP**		X	X**	X										
1R01MW366ASG004	Air	8/1/02	Field Duplicate of 1R01MW366ASG003, MS/MSD/DUP**		X**	X	X										
1R01MWI-5SG002	Air	8/1/02			X	X	X										
1R01MW16ASG0003	Air	8/1/02			X	X	X										
1R01MW18ASG002	Air	8/1/02			X	X	X										

* = Cursory validation performed on all samples
** = MS/MSD/DUP performed on indicated parameters only
DUP = Matrix duplicate
*** = Full review performed on indicated parameters only
VOC = Volatile Organic Compounds
MS/MSD = Matrix Spike/Matrix Spike Duplicate
HC = Hydrocarbons

DATA ASSESSMENT

VOLATILE ORGANIC ANALYSIS (EPA Method TO-15)

I. Holding Times

A. The 30 day analysis holding time requirement for air samples in summa-cannisters was met.

II. Surrogate Recovery

A. Surrogates were not required by the method.

III. Matrix Spike/Matrix Spike Duplicate (MS/MSD)

A The MS/MSD analysis was performed on samples GMP08SG003* and 1R01MW366ASG004. The percent recoveries (%R) and relative percent differences (RPD) were within the QC limits.

B The DUP analysis was performed on samples GMP08SG003* and 1R01MW366ASG004. The relative percent differences (RPD) were within the QC limits.

IV. Blank Spike or Laboratory Control Sample (LCS)

A. The LCS QC samples were analyzed as required under the TTEMI SOW. The percent recoveries (%R) and relative percent differences (RPD) were within the QC limits.

V. Blank Contamination

A. Due to common laboratory contamination, the following results are considered nondetected (U4).

• Methylene chloride in samples	GMP08SG003* GMP08SG003DL* GMP07SG004 GMP06SG003 GMPFB004 GMP12SG004 GMP01SG004*	GMP03SG004 GMP02SG003DL* GMP11SG004 GMP11SG004RE SGLPSG002 SGCSSG003* 1R01MW366ASG004	1R01MWI-5SG002 1R01MWI-5SG002DL 1R01MW16ASG0003 1R01MW16ASG0003DL 1R01MW18ASG002 1R01MW18ASG002RE
• Acetone in samples	GMP08SG003DL* GMP07SG004 GMP06SG003	GMPFB004 GMP01SG004* GMP02SG003DL*	GMP11SG004 GMP11SG004RE
• 2-Butanone in samples	GMPFB004 SGCSSG003*	1R01MW366ASG003 1R01MW366ASG004	1R01MW18ASG002RE

Acetone, Methylene chloride, and 2-Butanone are considered common laboratory contaminants when found at levels less than 5x the CRQL in environmental samples and not found in the associated blanks.

B. No volatile contaminants were found in the method blanks.

C. Due to field blank contamination, the following results are considered nondetected (U2).

• Dichlorodifluoromethane in sample		GMP08SG003*	
• Chloromethane in samples	GMP08SG003DL*	GMP01SG004*	GMP11SG004RE
• Ethanol in samples	GMP11SG003	GMP11SG004RE	
• Carbon disulfide in samples	GMP08SG003* GMP08SG003DL* GMP07SG004 GMP06SG003 GMP12SG004	GMP01SG004* GMP05SG003 GMP04SG003 GMP03SG004 GMP02SG003*	GMP02SG003DL* GMP11SG003 GMP11SG004 GMP11SG004RE
• Toluene in samples	GMP08SG003* GMP08SG003DL* GMP07SG004 GMP12SG004 GMP01SG004*	GMP05SG003 GMP04SG003 GMP03SG004 GMP02SG003*	GMP02SG003DL* GMP11SG003 GMP11SG004 GMP11SG004RE
• Ethylbenzene in samples	GMP07SG004 GMP05SG003 GMP04SG003	GMP03SG004 GMP02SG003DL* GMP11SG003	GMP11SG004 GMP11SG004RE
• m,p-Xylenes in samples	GMP07SG004 GMP06SG003 GMP12SG004 GMP01SG004*	GMP05SG003 GMP04SG003 GMP03SG004 GMP02SG003DL*	GMP11SG003 GMP11SG004 GMP11SG004RE
• o-Xylene in samples	GMP07SG004 GMP06SG003 GMP12SG004	GMP05SG003 GMP03SG004 GMP11SG003	GMP11SG004 GMP11SG004RE
• 1,2,4-Trimethylbenzene in samples		GMP03SG004 GMP11SG003	GMP11SG004

The following compounds were detected in the associated field, trip, and equipment rinsate blanks at the concentrations noted below.

Field Blank ID	Compound	Concentration, ppbv
GMPFB004	Dichlorodifluoromethane	0.9
GMPFB004	Chloromethane	0.9
GMPFB004	Ethanol	6.3
GMPFB004	Carbon disulfide	1.4

Field Blank ID	Compound	Concentration, ppbv
GMPFB004	Toluene	6.3
GMPFB004	Ethylbenzene	1.2
GMPFB004	m,p-Xylenes	3.4
GMPFB004	o-Xylene	1.0
GMPFB004	1,2,4-Trimethylbenzene	1.4

Detected results less than 5x the blank contamination were qualified.

VI. Calibrations

A. Initial calibration was performed using required standard concentrations. Percent relative standard deviations (%RSD) were less than or equal to 30.0% for all volatile compounds for all volatile compounds with the exceptions listed below.

B. Continuing calibration was performed at the required frequencies as stated in the method.

C. The results with a greater than 10% difference between the recalculated and reported concentrations are listed below.

Calibration Date	Compound	Reported %D	Recalculated %D
8/2/02 (0801007)	1,2-Dichloroethane	26.0	14

Although this is a protocol violation, no data was qualified since the %D value was below the technical criteria of 30.0% .

D. All of the continuing calibration percent differences (%D) between the initial calibration RRF and the continuing calibration RRF were less than or equal to 30.0% .

VII. Internal Standards

A. All internal standard area counts were within -50% to +100% of the associated calibration standard and retention times were ±30 seconds of the associated calibration standard retention time with the exceptions listed below.

B. Due to internal standard problems, the following detected and nondetected results are qualified as estimated (Je/UJe).

- Bromoform, 1,1,2,2-Tetrachloroethane, Chlorobenzene, Ethylbenzene, Styrene, 1,3,5-Trimethybenzene, 1,3-Dichlorobenzene, 1,4-Dichlorobenzene, 1,2-Dichlorobenzene, 1,2,4-Trichlorobenzene, Hexachlorobutadiene, m,p-Xylenes, o-Xylene, Benzyl chloride, and 4-Ethyltoluene in sample GMP02SG003*

- Carbon tetrachloride, Bromodichloromethane, 1,2-Dichloropropane, cis-1,3-Dichloropropene, Trichloroethene, Dibromochloromethane, 1,1,2-Trichloroethane, Benzene, trans-1,3-Dichloropropene, 4-Methyl-2-pentanone, 2-Hexanone, Tetrachloroethene, Toluene, 1,2-Dibromoethane, Cyclohexane, 1,4-Dioxane, and Heptane in sample GMP11SG004

The internal standard area counts in the samples listed above were less than one half of the reference standard and are listed below.

Sample	Internal Standard	Area	QC Limits
GMP02SG003*	Chlorobenzene-d5	1076933	1112377.5-4449510
GMP11SG004	1,4-Difluorobenzene	670538	1182805-4731220

Internal standard area counts of less than 50% of the standard area count may indicate a loss of instrument sensitivity.

VIII. Field Duplicate

A. The following RPDs were obtained for the field duplicate samples GMP11SG003 / GMP11SG004:

- 200% for Ethanol
- 172% for Methylene chloride
- 63% for Carbon disulfide
- 89% for Benzene
- 96% for Heptane
- 92% for Toluene
- 200% for 1,4-Dichlorobenzene
- 200% for Acetone

The following RPDs were obtained for the field duplicate samples GMP11SG003 / GMP11SG004RE:

- 86% for Ethanol
- 93% for Methylene chloride
- 67% for Benzene
- 82% for Toluene
- 55% for 1,3,5-Trimethylbenzene
- 200% for 1,4-Dichlorobenzene
- 200% for Chloromethane
- 200% for Acetone
- 200% for 1,1,2-Trichloro-1,2,2-trifluoroethane
- 200% for 1,2-Dichloroethane
- 200% for 4-Ethyltoluene

The following RPDs were obtained for the field duplicate samples 1R01MW366ASG003 / 1R01MW366ASG004:

- 200% for Ethanol
- 200% for Isopropyl alcohol
- 191% for Methylene chloride
- 113% for Carbon disulfide
- 63% for 2-Butanone
- 142% for Hexane
- 60% for Cyclohexane

- 174% for Toluene
- 200% for Ethylbenzene
- 162% for m,p-Xylene
- 154% for o-Xylene
- 200% for 4-Ethyltoluene
- 200% for 1,3,5-Trimethylbenzene
- 200% for 1,2,4-Trimethylbenzene
- 200% for Tetrachlorothene
- 200% for 1,1-Dichlorothane

For air samples, the field RPD guideline is ± 50%. The data are not qualified on the basis of field duplicate results.

IX. Other Qualifications

A. The following results are qualified as estimated (Jg).

- All VOA detected results reported below the RL.

Detected results reported below the RL are considered to be qualitatively acceptable, but quantitatively unreliable due to the uncertainty in analytical precision near the limit of detection.

B. The following detected results are qualified as estimated (Jh).

• Propylene, Chloroethane, Hexane, Cyclohexane, 1,3,5-Trimethylbenzene, and 1,2,4-Trimethylbenzene in sample			GMP08SG003*
• Hexane in samples	GMP08SG003DL*	GMP03SG004	GMP02SG003*
• Dichlorodifluoromethane in sample			GMP01SG004*
• Chloroethane in sample			GMP05SG003
• Hexane and Heptane in sample			1R01MWI-5SG002
• Heptane in sample			1R01MW16ASG0003
• Propylene and Acetone in sample			1R01MW18ASG002

The above listed sample results exceeded the calibration range.

Full Validation Criteria for Samples GMP08SG003*, GMP08SG003DL*, GMP01SG004*, GMP02SG003*, GMP02SG003DL*, and SGCSSG003*

X. GC/MS Instrument Performance Checks

A. The ion abundance criteria were met for the bromofluorobenzene (BFB) GC/MS instrument performance check. The samples were analyzed within 12 hours of the associated instrument performance check.

XI. Target Compound List (TCL) Identification

A. The relative retention times, mass spectra, and peak identifications of the samples were evaluated. Target compound identification was considered to be correct.

XII. Compound Quantitation and Reported Detection Limits

A. Sample results were recalculated with the proper dilution factors, weights, volumes, and percent moisture used to calculate the sample results. The samples were found to be correctly quantitated. The reported detection limits were consistent with Tetra Tech EMI's required report limits and reflect any dilutions, weights, volumes, and percent moisture.

XIII. Tentatively Identified Compounds (TICs)

A. The TIC library searches were not performed for this SDG.

XIV. System Performance

A. The samples were evaluated for reconstructed ion chromatogram (RIC) baseline shifts, extraneous peaks, loss of resolution, and peak tailing. No system degradation was noted.

FIXED GASES (O_2, N_2, CO, CO_2, and Methane) ANALYSIS (by EPA Method TO-3C)

I. Holding Times

A. The 30 day analysis holding time requirement for air samples in summa-cannisters was met.

II. Surrogate Recovery

A. Surrogates were not required by the method.

III. Matrix Spike/Matrix Spike Duplicate (MS/MSD)

A The MS/MSD analysis was performed on samples GMP08SG003*, GMP03SG004, and SGCSSG003*. The percent recoveries (%R) and relative percent differences (RPD) were within the QC limits.

B The DUP analysis was performed on samples GMP07SG004, GMP02SG003*, and 1R01MW366ASG003. The relative percent differences (RPD) were within the QC limits.

IV. Blank Spike or Laboratory Control Sample (LCS)

A. The LCS QC samples were analyzed as required under the TTEMI SOW. The percent recoveries (%R) and relative percent differences (RPD) were within the QC limits.

V. Blank Contamination

A. Due to method blank contamination, the following results are considered nondetected (U1).

- Nitrogen in sample 1R01MWI-5SG002

The following compounds were detected in the associated method blanks at the concentrations noted below.

Blank ID	Compound	Concentration
MB3	Nitrogen	0.4%

Detected results less than 5x the blank contamination were qualified.

B. Due to field blank contamination, the following results are considered nondetected (U2).

• Oxygen and Nitrogen in samples	GMP08SG003*	GMP12SG004	GMP04SG003	GMP11SG003
	GMP07SG004	GMP01SG004*	GMP03SG004	GMP11SG004
	GMP06SG003	GMP05SG003	GMP02SG003*	

The following compounds were detected in the associated field blank at the concentrations noted below.

Field Blank ID	Compound	Concentration

Field Blank ID	Compound	Concentration
GMPFB004	Oxygen	20%
GMPFB004	Nitrogen	79%

Detected results less than 5x the blank contamination were qualified.

VI. Calibrations

A. Initial calibration of compounds was performed as required by the method. The percent relative standard deviations (%RSD) of calibration factors for compounds were less than or equal to 25.0% .

B. Calibration verification was performed at required frequencies. The percent differences (%D) of amounts in continuing standard mixtures were within the 25.0% QC limits.

VII. Field Duplicate

A. No RPDs above 50% were obtained for the field duplicate samples GMP11SG003 / GMP11SG004.

The following RPDs were obtained for the field duplicate samples 1R01MW366ASG003 / 1R01MW366ASG004:

- 125% for Oxygen
- 55% for Methane
- 51% for Carbon dioxide

For air samples, the field RPD guideline is ± 50%. The data are not qualified on the basis of field duplicate results.

VIII. Other Qualifications

A. No results were reported below the RL.

Full Validation Criteria for Samples GMP08SG003*, GMP01SG004*, GMP02SG003*, and SGCSSG003*

IX. Compound Quantitation and Reported Detection Limits

A. Sample results were recalculated, with the proper dilution factors, weights, volumes, and percent moisture used to calculate the sample results. The samples were found to be correctly quantitated. The reported detection limits were consistent with Tetra Tech EMI's required report limits and reflect any dilutions, weights, volumes, and percent moisture.

X. System Performance

A. The samples were evaluated for baseline shifts, extraneous peaks, loss of resolution, and peak tailing. No system degradation was noted.

XI. Compound Identification

A. Target compound identification was considered to be correct for samples GMP08SG003*, GMP01SG004*, GMP02SG003*, and SGCSSG003*.

NON-METHANE HYDROCARBONS and METHANE ANALYSIS (by EPA Method TO-25C)

I. Holding Times

A. The 30 day analysis holding time requirement for air samples in summa-cannisters was met.

II. Surrogate Recovery

A. Surrogates were not required by the method.

III. Matrix Spike/Matrix Spike Duplicate (MS/MSD)

A The MS/MSD analysis was performed on samples GMP08SG003*, GMPFB004, SGLPSG002, and SGCSSG003*. The percent recoveries (%R) and relative percent differences (RPD) were within the QC limits.

B The DUP analysis was performed on samples GMP07SG004, GMP06SG003, and GMP11SG003. The relative percent differences (RPD) were within the QC limits.

IV. Blank Spike or Laboratory Control Sample (LCS)

A. The LCS QC samples were analyzed as required under the TTEMI SOW. The percent recoveries (%R) and relative percent differences (RPD) were within the QC limits.

V. Blank Contamination

A. No non-methane hydrocarbon or methane contaminants were found in the method blanks. No samples were qualified based on the non-methane hydrocarbon or methane contaminants found in the field blank sample GMPFB004.

VI. Calibrations

A. Initial calibration of compounds was performed as required by the method. The percent relative standard deviations (%RSD) of calibration factors for compounds were less than or equal to 20.0% .

B. Calibration verification was performed at required frequencies. The percent differences (%D) of amounts in continuing standard mixtures were within the 25.0% QC limits.

VII. Field Duplicate

A. The following RPDs were obtained for the field duplicate samples GMP11SG003 / GMP11SG004:

- 82% for TNMHC as Methane

The following RPDs were obtained for the field duplicate samples 1R01MW366ASG003 / 1R01MW366ASG004:

- 71% for TNMHC

For air samples, the field RPD guideline is ± 50%. The data are not qualified on the basis of field duplicate results.

VIII. Other Qualifications

A. No results were reported below the RL.

Full Validation Criteria for Samples GMP08SG003*, GMP01SG004*, GMP02SG003*, and SGCSSG003*

IX. Compound Quantitation and Reported Detection Limits

A. Sample results were recalculated, with the proper dilution factors, weights, volumes, and percent moisture used to calculate the sample results. The samples were found to be correctly quantitated. The reported detection limits were consistent with Tetra Tech EMI's required report limits and reflect any dilutions, weights, volumes, and percent moisture.

X. System Performance

A. The samples were evaluated for baseline shifts, extraneous peaks, loss of resolution, and peak tailing. No system degradation was noted.

XI. Compound Identification

A. Target compound identification was considered to be correct for sample GMP08SG003*, GMP01SG004*, GMP02SG003*, and SGCSSG003*.

OVERALL ASSESSMENT OF DATA

I. Method Compliance and Additional Comments

A. All analyses were conducted within all specifications of the requested methods.

II. Usability

Volatile Organic Analysis

A. No results for volatile analysis were rejected in this SDG.

B. Due to common laboratory and field blank contamination, internal standard, and compound quantitation problems in the volatile analysis, several samples were qualified as estimated. The findings were as follows:

- Due to common laboratory contamination problems, Methylene chloride was qualified nondetect in twenty samples, Acetone was qualified nondetect in eight samples, and 2-Butanone was qualified nondetect in five samples.

- Due to field blank contamination problems, Dichlorodifluoromethane was qualified nondetect in one sample, Chloromethane and 1,2,4-Trimethylbenzene were qualified nondetect in three samples, Ethanol was qualified nondetect in two samples, Carbon disulfide was qualified nondetect in fourteen samples, Toluene was qualified nondetect in thirteen samples, Ethylbenzene and o-Xylene were qualified nondetect in eight samples, and m,p-Xylenes was qualified nondetect in eleven samples.

- Due to internal standard area count problems, Bromoform, 1,1,2,2-Tetrachloroethane, Chlorobenzene, Ethylbenzene, Styrene, 1,3,5-Trimethybenzene, 1,3-Dichlorobenzene, 1,4-Dichlorobenzene, 1,2-Dichlorobenzene, 1,2,4-Trichlorobenzene, Hexachlorobutadiene, m,p-Xylenes, o-Xylene, Benzyl chloride, 4-Ethyltoluene, Carbon tetrachloride, Bromodichloromethane, 1,2-Dichloropropane, cis-1,3-Dichloropropene, Trichloroethene, Dibromochloromethane, 1,1,2-Trichloroethane, Benzene, trans-1,3-Dichloropropene, 4-Methyl-2-pentanone, 2-Hexanone, Tetrachloroethene, Toluene, 1,2-Dibromoethane, Cyclohexane, 1,4-Dioxane, and Heptane results were qualified as estimated in one sample.

- All detected results reported below the RL were qualified as estimated.

- Due to compound quantitation problems, Cyclohexane, 1,3,5-Trimethylbenzene, 1,2,4-Trimethylbenzene, Dichlorodifluoromethane, and Acetone detected results were qualified as estimated in one sample, Hexane detected results were qualified as estimated in five samples, and Heptane, Chloroethane, and Propylene detected results were qualified as estimated in two samples.

C. Samples GMP08SG003*, GMP02SG003*, 1R01MWI-5SG002, and 1R01MW16ASG0003 were diluted due to sample results exceeding the calibration range, sample GMP11SG004 was reanalyzed due to low internal standard area counts, and sample 1R01MW18ASG002 was reanalyzed due to sample results exceeding the calibration range. For sample GMP08SG003*, all volatile results except Propylene, Chloroethane, Hexane, Cyclohexane, 1,3,5-Trimethylbenzene, and 1,2,4-Trimethylbenzene should be considered the most usable. The Propylene, Chloroethane, Hexane, Cyclohexane, 1,3,5-Trimethylbenzene, and 1,2,4-Trimethylbenzene results for sample GMP08SG003DL* should be

considered the most usable. For sample GMP02SG003*, all volatile results except 1,3,5-Trimethylbenzene, Bromoform, 1,1,2,2-Tetrachloroethane, Chlorobenzene, Ethylbenzene, Styrene, 1,3,5-Trimethybenzene, 1,3-Dichlorobenzene, 1,4-Dichlorobenzene, 1,2-Dichlorobenzene, 1,2,4-Trichlorobenzene, Hexachlorobutadiene, m,p-Xylenes, o-Xylene, Benzyl chloride, and 4-Ethyltoluene should be considered the most usable. The 1,3,5-Trimethylbenzene, Bromoform, 1,1,2,2-Tetrachloroethane, Chlorobenzene, Ethylbenzene, Styrene, 1,3,5-Trimethybenzene, 1,3-Dichlorobenzene, 1,4-Dichlorobenzene, 1,2-Dichlorobenzene, 1,2,4-Trichlorobenzene, Hexachlorobutadiene, m,p-Xylenes, o-Xylene, Benzyl chloride, and 4-Ethyltoluene results for sample GMP02SG003DL* should be considered the most usable, For sample GMP11SG004 , all volatile results except Carbon tetrachloride, Bromodichloromethane, 1,2-Dichloropropane, cis-1,3-Dichloropropene, Trichloroethene, Dibromochloromethane, 1,1,2-Trichloroethane, Benzene, trans-1,3-Dichloropropene, 4-Methyl-2-pentanone, 2-Hexanone, Tetrachloroethene, Toluene, 1,2-Dibromoethane, Cyclohexane, 1,4-Dioxane, and Heptane should be considered the most usable. The Carbon tetrachloride, Bromodichloromethane, 1,2-Dichloropropane, cis-1,3-Dichloropropene, Trichloroethene, Dibromochloromethane, 1,1,2-Trichloroethane, Benzene, trans-1,3-Dichloropropene, 4-Methyl-2-pentanone, 2-Hexanone, Tetrachloroethene, Toluene, 1,2-Dibromoethane, Cyclohexane, 1,4-Dioxane, and Heptane results for sample GMP11SG004RE should be considered the most usable. For sample 1R01MWI-5SG002, all volatile results except Hexane and Heptane should be considered the most usable. The Hexane and Heptane results for sample 1R01MWI-5SG002DL should be considered the most usable. For sample 1R01MW16ASG003, all volatile results except Heptane should be considered the most usable. The Heptane results for sample 1R01MW16ASG003DL should be considered the most usable. For sample 1R01MW18ASG002, all volatile results except Propylene and Acetone should be considered the most usable. The Propylene and Acetone results for sample 1R01MW18ASG002DL should be considered the most usable.

Fixed Gases Analysis

A. No results for fixed gases analysis were rejected in this SDG.

B. Due to common laboratory and field blank contamination, internal standard, and compound quantitation problems in the volatile analysis, several samples were qualified as estimated. The findings were as follows:

- Due to common laboratory contamination problems, Nitrogen was qualified nondetect in one sample.
- Due to method blank contamination problems, Oxygen and Nitrogen were qualified nondetect in eleven samples.

C. No samples were reextracted or reanalyzed for fixed gases analysis in this SDG.

Non-Methane Hydrocarbons Analysis

A. No results for non-methane hydrocarbons analysis were rejected in this SDG.

B. No samples were reextracted or reanalyzed for non-methane hydrocarbons analysis in this SDG.

III. The quality control criteria reviewed, other than those discussed above, were met and are considered acceptable. Sample results that were found to be estimated (J) are usable for limited purposes only. Based upon the full data validation, all other results are considered valid and usable for all purposes.

DATA VALIDATION REPORT

Site:	Hunters Point Shipyard, HPS, DO 003 Data Gaps Investigation
Contract Task Order (CTO) No.:	G9016-0030306020708
Laboratory:	Atmospheric Analysis & Consulting, Inc.
Data Reviewer:	Richard Amano, Stacey Mavrakos, and Pei Geng.
Firm/Proj. No:	Laboratory Data Consultants, Inc./9370B
Review Date:	November 14, 2002
Sample Delivery Group (SDG) No.:	HAN19

Sample Nos.: GMP22001* GMP22001DL* GMP22002 GMP22002DL

* Full Validation Sample

Matrix: Air

Collection Date(s): October 7, 2002

The data were qualified according to the U.S. Environmental Protection Agency (EPA) documents "USEPA Contract Laboratory Program National Functional Guidelines for Organic Data Review" (October 1999). In addition, the Tetra Tech EMI, Inc. documents "Data Validation Guidelines for CLP Organic Analyses," "Data Validation Guidelines for Non-CLP Organic Analyses" (March 1997), and the document entitled "PRC Comprehensive Long-term Environmental Action Navy II Analytical Services Statement of Work" (September 1998) were used along with other specified criteria in EPA methods. Data validation requirements are presented below.

I certify that all data validation criteria outlined in the above referenced documents were assessed, and any qualifications made to the data were in accordance with those documents.

Certified by Richard Amano
Principal Chemist

DATA VALIDATION REQUIREMENTS

Full validation includes all parameters listed below. Cursory validation parameters are indicated by an asterisk (*).

CLP Organic Parameters

*	Holding times
	GC/MS instrument performance check
*	Initial and continuing calibrations
*	Blanks
*	Surrogate recovery
*	Matrix spike/matrix spike duplicate
*	Laboratory control sample or blank spike
*	Field duplicates
*	Internal standard performance
	Target compound identification
	Tentatively identified compounds
	Compound quantitation
	Reported detection limits
	System performance
*	Overall assessment of data for the SDG

CLP Inorganic Parameters

*	Holding times
*	Initial and continuing calibrations
*	Blanks
*	Matrix spike
*	Laboratory control sample or blank spike
*	Field duplicates
*	Matrix duplicates
	ICP interference check sample
	GFAA quality control
*	ICP serial dilution
	Sample result verification
	Analyte quantitation
	Reported detection limits
*	Overall assessment of data for the SDG

Non-CLP Organic and Inorganic Parameters

*	Method compliance
*	Holding times
*	Initial and continuing calibrations
*	Blanks
*	Matrix spike/matrix spike duplicate
*	Laboratory control sample or blank spike
*	Field duplicates
*	Matrix duplicates
*	Surrogate recovery
	Analyte quantitation
	Reported detection limits
*	Overall assessment of data for the SDG

DATA VALIDATION QUALIFIERS AND CODES

Data Validation Qualifiers

UJ Estimated nondetected result

J Estimated detected result

R Rejected result

NJ Tentatively Identified Compound (TIC)

Data Validation Qualifier Codes

J1/UJ1/R3 System performance

J2/UJ2 Matrix Duplicate precision exceedance

J3/UJ3/R2 Accuracy exceedance in matrix spike, laboratory control sample (LCS), surrogate recovery

J4/UJ4 Serial dilution

J5/UJ5/R1 Holding time exceedance

J7/UJ7/R7 Initial and continuing Calibration exceedance

J8 Compound detected above calibration range

J9 Inorganics-ICP interference check sample / Organics - %D between columns

J0/UJ0/R0 Internal standard exceedance

U1 Method blank contamination

U2 Field blank contamination

U4 Common laboratory contamination

G, D, M, L, H, Z TPH qualifiers

Y Benzo(b)fluoranthene quantitated as the total of benzo(b) and benzo(k)fluoranthene

TABLE 1
SAMPLE CROSS REFERENCE TABLE
SAMPLE DELIVERY GROUP HAN19

Sample ID	Matrix	Date Collected	Quality Control ID	Validation Criteria*	Analyses												
					VOC (TO15)												
GMP22001	Air	10/7/02		Full	X												
GMP22002	Air	10/7/02	Field duplicate of GMP22001		X												

* = Cursory validation performed on all samples
** = MS/MSD/DUP performed on indicated parameters only
*** = Full review performed on indicated parameters only
VOC = Volatile Organic Compounds
MS/MSD = Matrix Spike/Matrix Spike Duplicate
DUP = Matrix duplicate

DATA ASSESSMENT

VOLATILE ORGANIC ANALYSIS (EPA Method TO-15)

I. Holding Times

A. The 30 day analysis holding time requirement for air samples in summa-cannisters was met.

II. Surrogate Recovery

A. The surrogate percent recoveries (%R) were within the QC limits with the exceptions listed below.

B. Due to surrogate recovery problems, the following detected results are qualified as estimated (J3).

- All volatile compounds in samples GMP22001* GMP22002DL

The surrogates outside of QC limits are listed below.

Sample ID	Surrogate	% R	QC Limits
GMP22001*	Bromofluorobenzene	360	60-130%
GMP22002DL	Bromofluorobenzene	390	60-130%

High percent recoveries indicate that detected results may be biased high.

III. Matrix Spike/Matrix Spike Duplicate (MS/MSD)

A The MS/MSD analysis was performed on sample EX2E001. The percent recoveries (%R) and relative percent differences (RPD) were within the QC limits.

B The DUP analysis was performed on sample EX2E001. The relative percent differences (RPD) were within the QC limits.

IV. Blank Spike or Laboratory Control Sample (LCS)

A. The LCS QC samples were analyzed as required under the TTEMI SOW. The percent recoveries (%R) and relative percent differences (RPD) were within the QC limits.

V. Blank Contamination

A. No common laboratory contaminants were found in the samples. No volatile contaminants were found in the method blanks. No field blanks were identified in this SDG.

VI. Calibrations

A. Initial calibration was performed using required standard concentrations. Percent relative standard deviations (%RSD) were less than or equal to 25.0% for all volatile compounds for all volatile compounds.

B. Continuing calibration was performed at the required frequencies as stated in the method. All of the continuing calibration percent differences (%D) between the initial calibration RRF and the continuing calibration RRF were less than or equal to 25.0% .

VII. Internal Standards

A. All internal standard area counts were within -50% to +100% of the associated calibration standard and retention times were ±30 seconds of the associated calibration standard retention time.

VIII. Field Duplicate

A. The following RPDs were obtained for the field duplicate samples GMP22001* / GMP22002:

- 200% for Bromomethane
- 52% for Acetone
- 200% for trans-1,2-Dichloroethene
- 200% for 1,1-Dichloroethane
- 200% for Tetrahydrofuran
- 200% for 4-Methyl-2-pentanone
- 51% for Carbon disulfide

The following RPDs were obtained for the field duplicate samples GMP22001DL* / GMP22002DL:

- 200% for Tetrahydrofuran
- 200% for Trichlorofluoromethane
- 200% for Dibromochloromethane
- 200% for Bromoform

For air samples, the field RPD guideline is ± 50%. The data are not qualified on the basis of field duplicate results.

IX. Other Qualifications

A. The following results are qualified as estimated (J).

- All VOA detected results reported below the RL.

Detected results reported below the RL are considered to be qualitatively acceptable, but quantitatively unreliable due to the uncertainty in analytical precision near the limit of detection.

B. The following detected results are qualified as estimated (J8).

- Acetone in sample GMP22002

The above listed sample results exceeded the calibration range.

Full Validation Criteria for Samples GMP22001* and GMP22001DL*

X. GC/MS Instrument Performance Checks

A. The ion abundance criteria were met for the bromofluorobenzene (BFB) GC/MS instrument performance check. The samples were analyzed within 24 hours of the associated instrument performance check..

XI. Target Compound List (TCL) Identification

A. The retention time, mass spectra, and peak identifications of the samples were evaluated. Target compound identification was considered to be correct.

B. The relative retention times (RRT) of all compound results in the samples were within the ±0.06 RRT from the CCV QC limits with the exceptions listed below.

Sample ID	Compound
GMP22001*	Propylene
GMP22001*	Dichlorodifluoromethane
GMP22001*	1,2-Dichloro-1,1,2,2-tetrafluoroethane
GMP22001*	Vinyl chloride
GMP22001*	Bromomethane
GMP22001*	Chloroethane
GMP22001*	Tetrahydrofuran
GMP22001DL*	Acetone
GMP22001DL*	Tetrahydrofuran

XII. Compound Quantitation and Reported Detection Limits

A. Sample results were recalculated with the proper dilution factors, weights, volumes, and percent moisture used to calculate the sample results. The samples were found to be correctly quantitated. The reported detection limits were consistent with Tetra Tech EMI's required report limits and reflect any dilutions, weights, volumes, and percent moisture.

XIII. Tentatively Identified Compounds (TICs)

A. The TIC library searches were not performed for this SDG.

XIV. System Performance

A. The samples were evaluated for reconstructed ion chromatogram (RIC) baseline shifts, extraneous peaks, loss of resolution, and peak tailing. No system degradation was noted.

OVERALL ASSESSMENT OF DATA

I. Method Compliance and Additional Comments

A. All analyses were conducted within all specifications of the requested methods.

II. Usability

Volatile Organic Analysis

A. No results for volatile analysis were rejected in this SDG.

B. Due to surrogate and compound quantitation problems in the volatile analysis, several samples were qualified as estimated. The findings were as follows:

- Due to surrogate recovery problems, all volatile detected results were qualified as estimated in two samples.
- All detected results reported below the RL were qualified as estimated.
- Due to compound quantitation problems, Acetone detected results were qualified as estimated in one sample.

C. Samples GMP22001* and GMP22002 were diluted due to sample results exceeding the calibration range. For sample GMP22001*, all volatile results should be considered the most usable. All volatile results for sample GMP22001DL* should not be considered usable. For sampleGMP22002, all volatile results except Acetone should be considered the most usable. The Acetone results for sample GMP22002DL should be considered the most usable.

III. The quality control criteria reviewed, other than those discussed above, were met and are considered acceptable. Sample results that were found to be estimated (J) are usable for limited purposes only. Based upon the full data validation, all other results are considered valid and usable for all purposes.

DATA VALIDATION REPORT

Site:	Hunters Point Shipyard, HPS, DO 003 Data Gaps Investigation
Contract Task Order (CTO) No.:	G9016.003.03.06.02.07.08
Laboratory:	Atmospheric Analysis & Consulting, Inc.
Data Reviewer:	Richard Amano, Stacey Mavrakos, Erlinda Rauto, and Felomina Tanguilig.
Firm/Proj. No:	Laboratory Data Consultants, Inc./9629A
Review Date:	January 9, 2003
Sample Delivery Group (SDG) No.:	HAN23

Sample Nos.: GMP23001 GMP22003* GMP23001MS GMP23001MSD GMP23001DUP

* Full Validation Sample

Matrix: Air

Collection Date(s): November 13, 2002

The data were qualified according to the U.S. Environmental Protection Agency (EPA) documents "USEPA Contract Laboratory Program National Functional Guidelines for Organic Data Review" (October 1999). In addition, the Tetra Tech EMI, Inc. documents "Data Validation Guidelines for CLP Organic Analyses," "Data Validation Guidelines for Non-CLP Organic Analyses" (March 1997), and the document entitled "PRC Comprehensive Long-term Environmental Action Navy II Analytical Services Statement of Work" (September 1998) were used along with other specified criteria in EPA methods. Data validation requirements are presented below.

I certify that all data validation criteria outlined in the above referenced documents were assessed, and any qualifications made to the data were in accordance with those documents.

Certified by Richard Amano
Principal Chemist

DATA VALIDATION REQUIREMENTS

Full validation includes all parameters listed below. Cursory validation parameters are indicated by an asterisk (*).

CLP Organic Parameters

*	Holding times
	GC/MS instrument performance check
*	Initial and continuing calibrations
*	Blanks
*	Surrogate recovery
*	Matrix spike/matrix spike duplicate
*	Laboratory control sample or blank spike
*	Field duplicates
*	Internal standard performance
	Target compound identification
	Tentatively identified compounds
	Compound quantitation
	Reported detection limits
	System performance
*	Overall assessment of data for the SDG

CLP Inorganic Parameters

*	Holding times
*	Initial and continuing calibrations
*	Blanks
*	Matrix spike
*	Laboratory control sample or blank spike
*	Field duplicates
*	Matrix duplicates
	ICP interference check sample
	GFAA quality control
*	ICP serial dilution
	Sample result verification
	Analyte quantitation
	Reported detection limits
*	Overall assessment of data for the SDG

Non-CLP Organic and Inorganic Parameters

*	Method compliance
*	Holding times
*	Initial and continuing calibrations
*	Blanks
*	Matrix spike/matrix spike duplicate
*	Laboratory control sample or blank spike
*	Field duplicates
*	Matrix duplicates
*	Surrogate recovery
	Analyte quantitation
	Reported detection limits
*	Overall assessment of data for the SDG

DATA VALIDATION QUALIFIERS AND CODES

Data Validation Qualifiers

UJ Estimated nondetected result

J Estimated detected result

R Rejected result

NJ Tentatively Identified Compound (TIC)

Data Validation Qualifier Codes

J1/R3 System performance

J2 Duplicate precision exceedance

J3/R2 Matrix spike, laboratory control sample (LCS), surrogate recovery exceedance

J4 Serial dilution

J5/R1 Holding time exceedance

J7/R7 Calibration exceedance

J8 Compound above calibration range

J9 ICP interference check sample

J0 Internal standard exceedance

U1 Laboratory blank contamination

U2 Field blank contamination

U4 Common laboratory contamination

G, D, M, L, H, Z TPH qualifiers

TABLE 1
SAMPLE CROSS REFERENCE TABLE
SAMPLE DELIVERY GROUP HAN23

Sample ID	Matrix	Date Collected	Quality Control ID	Validation Criteria*	Analyses												
					TO-3C	TO-25C											
GMP23001	Air	11/13/02	MS/MSD/DUP		X	X											
GMP22003*	Air	11/13/02		Full	X	X											

* = Cursory validation performed on all samples
** = MS/MSD/DUP performed on indicated parameters only
DUP = Matrix duplicate
*** = Full review performed on indicated parameters only
VOC = Volatile Organic Compounds
MS/MSD = Matrix Spike/Matrix Spike Duplicate
HC = Hydrocarbons

DATA ASSESSMENT

FIXED GASES (O_2, N_2, CO, CO_2, and Methane) ANALYSIS (by EPA Method TO-3C)

I. Holding Times

A. The 30 day analysis holding time requirement for air samples in summa-cannisters was met.

II. Surrogate Recovery

A. Surrogates were not required by the method.

III. Matrix Spike/Matrix Spike Duplicate (MS/MSD)

A The MS/MSD analysis was performed on sample GMP23001. The percent recoveries (%R) and relative percent differences (RPD) were within the QC limits.

B The DUP analysis was performed on sample GMP23001. The relative percent differences (RPD) were within the QC limits.

IV. Blank Spike or Laboratory Control Sample (LCS)

A. The LCS QC samples were analyzed as required under the TTEMI SOW. The percent recoveries (%R) and relative percent differences (RPD) were within the QC limits.

V. Blank Contamination

A. No fixed gases contaminants were found in the method blanks. No field blanks were identified in this SDG.

VI. Calibrations

A. Initial calibration of compounds was performed as required by the method. The percent relative standard deviations (%RSD) of calibration factors for compounds were less than or equal to 25.0% .

B. Calibration verification was performed at required frequencies. The percent differences (%D) of amounts in continuing standard mixtures were within the 25.0% QC limits.

VII. Field Duplicate

A. No field duplicate samples were identified in this SDG.

VIII. Other Qualifications

A. No results were reported below the RL.

Full Validation Criteria for Sample GMP22003*

IX. Compound Quantitation and Reported Detection Limits

A. Sample results were recalculated, with the proper dilution factors, weights, volumes, and percent moisture used to calculate the sample results. The samples were found to be correctly quantitated. The reported detection limits were consistent with Tetra Tech EMI's required report limits and reflect any dilutions, weights, volumes, and percent moisture.

X. System Performance

A. The samples were evaluated for baseline shifts, extraneous peaks, loss of resolution, and peak tailing. No system degradation was noted.

XI. Compound Identification

A. Target compound identification was considered to be correct for sample GMP22003*.

NON-METHANE HYDROCARBONS ANALYSIS (by EPA Method TO-25C)

I. Holding Times

A. The 30 day analysis holding time requirement for air samples in summa-cannisters was met.

II. Surrogate Recovery

A. Surrogates were not required by the method.

III. Matrix Spike/Matrix Spike Duplicate (MS/MSD)

A The MS/MSD analysis was performed on sample GMP23001. The percent recoveries (%R) and relative percent differences (RPD) were within the QC limits.

B The DUP analysis was performed on sample GMP23001. The relative percent differences (RPD) were within the QC limits.

IV. Blank Spike or Laboratory Control Sample (LCS)

A. The LCS QC samples were analyzed as required under the TTEMI SOW. The percent recoveries (%R) and relative percent differences (RPD) were within the QC limits.

V. Blank Contamination

A. No non-methane hydrocarbon or methane contaminants were found in the method blanks. No field blanks were identified in this SDG.

VI. Calibrations

A. Initial calibration of compounds was performed as required by the method. The percent relative standard deviations (%RSD) of calibration factors for compounds were less than or equal to 25.0% .

B. Calibration verification was performed at required frequencies. The percent differences (%D) of amounts in continuing standard mixtures were within the 25.0% QC limits.

VII. Field Duplicate

A. No field duplicate samples were identified in this SDG.

VIII. Other Qualifications

A. No results were reported below the RL.

Full Validation Criteria for Sample GMP22003*

IX. Compound Quantitation and Reported Detection Limits

A. Sample results were recalculated, with the proper dilution factors, weights, volumes, and percent moisture used to calculate the sample results. The samples were found to be correctly quantitated. The reported detection limits were consistent with Tetra Tech EMI's required report limits and reflect any dilutions, weights, volumes, and percent moisture.

X. System Performance

A. The samples were evaluated for baseline shifts, extraneous peaks, loss of resolution, and peak tailing. No system degradation was noted.

XI. Compound Identification

A. Target compound identification was considered to be correct for sample GMP22003*.

OVERALL ASSESSMENT OF DATA

I. Method Compliance and Additional Comments

A. All analyses were conducted within all specifications of the requested methods.

II. Usability

Fixed Gases Analysis

A. No results for fixed gases analysis were rejected in this SDG.

B. No samples were reextracted or reanalyzed for fixed gases analysis in this SDG.

Non-Methane Hydrocarbons Analysis

A. No results for non-methane hydrocarbons analysis were rejected in this SDG.

B. No samples were reextracted or reanalyzed for non-methane hydrocarbons analysis in this SDG.

III. The quality control criteria reviewed, other than those discussed above, were met and are considered acceptable. Based upon the full and cursory data validation, all other results are considered valid and usable for all purposes.

DATA VALIDATION REPORT

Site:	Hunters Point Shipyard, HPS, DO 003 Data Gaps Investigation
Contract Task Order (CTO) No.:	G9016.003.03.06.02.07.08
Laboratory:	Atmospheric Analysis & Consulting, Inc.
Data Reviewer:	Richard Amano, Stacey Mavrakos, and Pei Geng.
Firm/Proj. No:	Laboratory Data Consultants, Inc./9629B
Review Date:	January 8, 2003
Sample Delivery Group (SDG) No.:	HAN24

Sample Nos.:

EX10002*	EX6001DL	EX4001	EX2001	EX2001MS
EX10002DL*	EX5002	EX4001DL	EX1002	EX2001MSD
EX10003*	EX5002DL	EX3002	EX1002DL	EX2001DUP
EX10003DL*	GMP23001	EX3002DL	FB001	GMP22003DL
EX6001	GMP23001DL	GMP22003		

* Full Validation Sample

Matrix: Air

Collection Date(s): November 13, 2002

The data were qualified according to the U.S. Environmental Protection Agency (EPA) documents "USEPA Contract Laboratory Program National Functional Guidelines for Organic Data Review" (October 1999). In addition, the Tetra Tech EMI, Inc. documents "Data Validation Guidelines for CLP Organic Analyses," "Data Validation Guidelines for Non-CLP Organic Analyses" (March 1997), and the document entitled "PRC Comprehensive Long-term Environmental Action Navy II Analytical Services Statement of Work" (September 1998) were used along with other specified criteria in EPA methods. Data validation requirements are presented below.

I certify that all data validation criteria outlined in the above referenced documents were assessed, and any qualifications made to the data were in accordance with those documents.

Certified by Richard Amano
Principal Chemist

DATA VALIDATION REQUIREMENTS

Full validation includes all parameters listed below. Cursory validation parameters are indicated by an asterisk (*).

CLP Organic Parameters

*	Holding times
	GC/MS instrument performance check
*	Initial and continuing calibrations
*	Blanks
*	Surrogate recovery
*	Matrix spike/matrix spike duplicate
*	Laboratory control sample or blank spike
*	Field duplicates
*	Internal standard performance
	Target compound identification
	Tentatively identified compounds
	Compound quantitation
	Reported detection limits
	System performance
*	Overall assessment of data for the SDG

CLP Inorganic Parameters

*	Holding times
*	Initial and continuing calibrations
*	Blanks
*	Matrix spike
*	Laboratory control sample or blank spike
*	Field duplicates
*	Matrix duplicates
	ICP interference check sample
	GFAA quality control
*	ICP serial dilution
	Sample result verification
	Analyte quantitation
	Reported detection limits
*	Overall assessment of data for the SDG

Non-CLP Organic and Inorganic Parameters

*	Method compliance
*	Holding times
*	Initial and continuing calibrations
*	Blanks
*	Matrix spike/matrix spike duplicate
*	Laboratory control sample or blank spike
*	Field duplicates
*	Matrix duplicates
*	Surrogate recovery
	Analyte quantitation
	Reported detection limits
*	Overall assessment of data for the SDG

DATA VALIDATION QUALIFIERS AND CODES

Data Validation Qualifiers

UJ Estimated nondetected result

J Estimated detected result

R Rejected result

NJ Tentatively Identified Compound (TIC)

Data Validation Qualifier Codes

J1/UJ1/R3 System performance

J2/UJ2 Matrix Duplicate precision exceedance

J3/UJ3/R2 Accuracy exceedance in matrix spike, laboratory control sample (LCS), surrogate recovery

J4/UJ4 Serial dilution

J5/UJ5/R1 Holding time exceedance

J7/UJ7/R7 Initial and continuing Calibration exceedance

J8 Compound detected above calibration range

J9 Inorganics-ICP interference check sample / Organics - %D between columns

J0/UJ0/R0 Internal standard exceedance

U1 Method blank contamination

U2 Field blank contamination

U4 Common laboratory contamination

G, D, M, L, H, Z TPH qualifiers

Y Benzo(b)fluoranthene quantitated as the total of benzo(b) and benzo(k)fluoranthene

TABLE 1
SAMPLE CROSS REFERENCE TABLE
SAMPLE DELIVERY GROUP HAN24

Sample ID	Matrix	Date Collected	Quality Control ID	Validation Criteria*	Analyses												
					VOC (TO15)												
EX10002	Air	11/13/02		Full	X												
EX10003	Air	11/13/02	Field duplicate of EX10002	Full	X												
EX6001	Air	11/13/02			X												
EX5002	Air	11/13/02			X												
GMP23001	Air	11/13/02			X												
EX4001	Air	11/13/02			X												
EX3002	Air	11/13/02			X												
GMP22003	Air	11/13/02			X												
EX2001	Air	11/13/02	MS/MSD/DUP		X												
EX1002	Air	11/13/02			X												
FB001	Air	11/13/02	Field blank		X												

* = Cursory validation performed on all samples
** = MS/MSD/DUP performed on indicated parameters only
*** = Full review performed on indicated parameters only
VOC = Volatile Organic Compounds
MS/MSD = Matrix Spike/Matrix Spike Duplicate
DUP = Matrix duplicate

DATA ASSESSMENT

VOLATILE ORGANIC ANALYSIS (EPA Method TO-15)

I. Holding Times

A. The 30 day analysis holding time requirement for air samples in summa-cannisters was met.

II. Surrogate Recovery

A. The surrogate percent recoveries (%R) were within the QC limits with the exceptions listed below.

B. Due to surrogate recovery problems, the following detected results are qualified as estimated (J3).

- All volatile compounds in samples EX5002 EX4001 GMP22003 GMP23001 EX3002 EX1002

The surrogates outside of QC limits are listed below.

Sample ID	Surrogate	% R	QC Limits
EX5002	Bromofluorobenzene	181	60-130%
GMP23001	Bromofluorobenzene	312	60-130%
EX4001	Bromofluorobenzene	176	60-130%
EX3002	Bromofluorobenzene	155	60-130%
GMP22003	Bromofluorobenzene	318	60-130%
EX1002	Bromofluorobenzene	185	60-130%

High percent recoveries indicate that detected results may be biased high.

III. Matrix Spike/Matrix Spike Duplicate (MS/MSD)

A The MS/MSD analysis was performed on sample EX2001. The percent recoveries (%R) and relative percent differences (RPD) were within the QC limits.

B The DUP analysis was performed on sample EX2001. The relative percent differences (RPD) were within the QC limits.

IV. Blank Spike or Laboratory Control Sample (LCS)

A. The LCS QC samples were analyzed as required under the TTEMI SOW. The percent recoveries (%R) and relative percent differences (RPD) were within the QC limits.

V. Blank Contamination

A. Due to common laboratory contamination, the following results are considered nondetected (U4).

• Methylene chloride in samples	FB001	EX1002	EX1002DL
• Acetone in samples	EX10002DL*	EX10003DL*	EX2001
• 2-Butanone in samples	GMP23001DL	EX2001	

Acetone, Methylene chloride, and 2-Butanone are considered common laboratory contaminants when found at levels less than 5x the CRQL in environmental samples and not found in the associated blanks.

B. No volatile contaminants were found in the method blanks.

C. Due to field blank contamination, the following results are considered nondetected (U2).

• Propylene in samples	EX10002*	EX10003*		
• Chloromethane in samples	EX10002*	EX10003*	EX2001	EX1002
• Ethanol in samples	EX10002* EX10003DL* EX6001	EX5002 GMP23001 EX4001	GMP22003 EX2001	EX1002 GMP22003DL
• Acetone in sample	EX10003*			
• Toluene in sample	EX2001			

The following compounds were detected in the associated field blank at the concentrations noted below.

Field Blank ID	Compound	Concentration, ppbv/v
FB001	Propylene	0.94
FB001	Chloromethane	0.72
FB001	Ethanol	10
FB001	Acetone	6.9
FB001	Toluene	0.85

Detected results less than 5x the blank contamination were qualified.

VI. Calibrations

A. Initial calibration was performed using required standard concentrations. Percent relative standard deviations (%RSD) were less than or equal to 25.0% for all volatile compounds for all volatile compounds.

B. Continuing calibration was performed at the required frequencies as stated in the method. All of the continuing calibration percent differences (%D) between the initial calibration RRF and the continuing calibration RRF were less than or equal to 25.0% .

VII. Internal Standards

A. All internal standard area counts were within -50% to +100% of the associated calibration standard and retention times were ±30 seconds of the associated calibration standard retention time.

VIII. Field Duplicate

A. The following RPDs were obtained for the field duplicate samples EX10002* / EX10003*:

- 200% for Ethanol
- 200% for Methyl-tert-butyl-ether
- 200% for 1,3-Dichlorobenzene

The following RPDs were obtained for the field duplicate samples EX10002DL* / EX10003DL*:

- 200% for Propylene
- 59% for 1,2-Dichloro-1,1,2,2-tetrafluoroethane
- 55% for Ethanol
- 200% for Trichlorofluoromethane
- 200% for 1,1-Dichloroethene
- 91% for Hexane
- 56% for Benzene
- 200% for Heptane
- 200% for Styrene
- 110% for o-Xylene
- 158% for 4-Ethyltoluene
- 176% for 1,3,5-Trimethylbenzene
- 189% for 1,2,4-Trimethylbenzene
- 200% for Isopropyl alcohol
- 200% for Cyclohexane
- 200% for Trichloroethene
- 57% for Dichlorodifluoromethane

For air samples, the field RPD guideline is ± 50%. The data are not qualified on the basis of field duplicate results.

IX. Other Qualifications

A. The following results are qualified as estimated (J).

- All VOA detected results reported below the RL.

Detected results reported below the RL are considered to be qualitatively acceptable, but quantitatively unreliable due to the uncertainty in analytical precision near the limit of detection.

B. The following detected results are qualified as estimated (J8).

- Tetrahydrofuran in samples EX10002* EX10003* EX1002
- Propylene and Acetone in samples EX6001 GMP23001 GMP22003
- Propylene, Chloromethane, Acetone, Carbon disulfide, and Tetrahydrofuran in sample EX5002
- Propylene, Acetone, and Tetrahydrofuran in sample EX4001
- Propylene and Tetrahydrofuran in sample EX3002

The above listed sample results exceeded the calibration range.

Full Validation Criteria for Samples EX10002*, EX10002DL*, EX10003*, and EX10003DL*

X. GC/MS Instrument Performance Checks

A. The ion abundance criteria were met for the bromofluorobenzene (BFB) GC/MS instrument performance check. The samples were analyzed within 24 hours of the associated instrument performance check..

XI. Target Compound List (TCL) Identification

A. The relative retention times, mass spectra, and peak identifications of the samples were evaluated. Target compound identification was considered to be correct with the exceptions listed below.

B. The following detected result retention time (RT) were outside the QC limits as shown below.

Sample ID	Compound	QC Limits
EX10002*	Acetone and Ethanol	±0.06 of the Standard
EX10002DL*	Acetone and Ethanol	±0.06 of the Standard
EX10003*	Acetone	±0.06 of the Standard
EX10003DL*	Acetone, Ethanol, and Isopropyl alcohol	±0.06 of the Standard

XII. Compound Quantitation and Reported Detection Limits

A. Sample results were recalculated with the proper dilution factors, weights, volumes, and percent moisture used to calculate the sample results. The samples were found to be correctly quantitated. The reported detection limits were consistent with Tetra Tech EMI's required report limits and reflect any dilutions, weights, volumes, and percent moisture.

XIII. Tentatively Identified Compounds (TICs)

A. The TIC library searches were not performed for this SDG.

XIV. System Performance

A. The samples were evaluated for reconstructed ion chromatogram (RIC) baseline shifts, extraneous peaks, loss of resolution, and peak tailing. No system degradation was noted.

OVERALL ASSESSMENT OF DATA

I. Method Compliance and Additional Comments

A. All analyses were conducted within all specifications of the requested method with the exceptions listed below.

- The following RT was outside the QC limits for Acetone and Ethanol for samples EX10002* and EX10002DL*, for Acetone for sample EX1003*, and for Acetone, Ethanol, and Isopropyl alcohol for sample EX10003DL*.

II. Usability

Volatile Organic Analysis

A. No results for volatile analysis were rejected in this SDG.

B. Due to common laboratory and field blank contamination, surrogate, and compound quantitation problems in the volatile analysis, several samples were qualified as estimated. The findings were as follows:

- Due to common laboratory contamination problems, Methylene chloride and Acetone were qualified nondetect in three samples and 2-Butanone was qualified nondetect in two samples.
- Due to field blank contamination problems, Propylene was qualified nondetect in two samples, Chloromethane was qualified nondetect in four samples, Ethanol was qualified nondetect in ten samples, and Acetone and Toluene were qualified nondetect in one sample.
- Due to surrogate recovery problems, all volatile detected results were qualified as estimated in six samples.
- All detected results reported below the RL were qualified as estimated.
- Due to compound quantitation problems, Acetone detected results were qualified as estimated in five samples, Chloromethane and Carbon disulfide detected results were qualified as estimated in one sample, and Propylene and Tetrahydrofuran detected results were qualified as estimated in six samples.

C. Samples EX10002*, EX10003*, EX1002, EX6001, GMP23001, GMP22003, EX5002, EX4001, and EX3002 were diluted due to sample results exceeding the calibration range. For samples EX10002*, EX10003*, and EX1002, all volatile results except Tetrahydrofuran should be considered the most usable. The Tetrahydrofuran results for sample EX10002DL*, EX10003DL*, EX1002DL should be considered the most usable. For samples EX6001, GMP23001, and GMP22003, all volatile results except Propylene and Acetone should be considered the most usable. The Propylene and Acetone results for samples EX6001DL, GMP23001DL, and GMP22003DL should be considered the most usable. For sample EX5002, all volatile results except Propylene, Chloromethane, Acetone, Carbon disulfide, and Tetrahydrofuran should be considered the most usable. The Propylene, Chloromethane, Acetone, Carbon disulfide, and Tetrahydrofuran results for sample EX5002DL should be considered the most usable. For sample EX4001, all volatile results except Propylene, Acetone, and Tetrahydrofuran should be considered the most usable. The Propylene, Acetone, and Tetrahydrofuran results for sample EX4001DL should be considered the most usable. For sample EX3002, all volatile results except Propylene and Tetrahydrofuran should be considered the most usable. The Propylene and Tetrahydrofuran results for sample EX3002DL should be considered the most usable.

III. The quality control criteria reviewed, other than those discussed above, were met and are considered acceptable. Sample results that were found to be estimated (J) are usable for limited purposes only. Based upon the full data validation, all other results are considered valid and usable for all purposes.

DATA VALIDATION REPORT

Site:	Hunters Point Shipyard, HPS, DO 003 Data Gaps Investigation
Contract Task Order (CTO) No.:	G9016.003.03.06.02.07.08
Laboratory:	Atmospheric Analysis & Consulting, Inc.
Data Reviewer:	Richard Amano, Stacey Mavrakos, Erlinda Rauto, Felomina Tanguilig, and Pei Geng.
Firm/Proj. No:	Laboratory Data Consultants, Inc./9629C
Review Date:	January 9, 2003
Sample Delivery Group (SDG) No.:	HAN25

Sample Nos.:

SGCSSG004*	1R01MW16ASG004*	GMP08ASG001DL	GMPFB005DUP
SGLPSG003	GMP12SG005	GMP07ASG001	1R01MW16ASG004MS
GMPFB005	GMP12SG005DL	1R01MWI-5SG003	1R01MW16ASG004MSD
GMP04ASG001A	GMP01ASG001	1R01MWI-5SG003DL	1R01MW16ASG004DUP
GMP04ASG001ADL	GMP01ASG001DL	1R01MW18ASG003*	GMP02ASG002MS
GMP04ASG001B	GMP02ASG001	1R01MW18ASG003DL*	GMP02ASG002MSD
GMP04ASG002	GMP02ASG001DL	SGCSSG004MS	GMP02ASG002DUP
GMP24SG001	GMP02ASG002	SGCSSG004MSD	1R01MW18ASG003MS
GMP24SG001DL	GMP02ASG002DL	SGCSSG004DUP	1R01MW18ASG003MSD
GMP25SG001*	1R01MW366ASG005	GMPFB005MS	1R01MW18ASG003DLDUP
GMP25SG001DL*	GMP08ASG001	GMPFB005MSD	

* Full Validation Sample

Matrix: Air

Collection Date(s): November 13, 2002

The data were qualified according to the U.S. Environmental Protection Agency (EPA) documents "USEPA Contract Laboratory Program National Functional Guidelines for Organic Data Review" (October 1999). In addition, the Tetra Tech EMI, Inc. documents "Data Validation Guidelines for CLP Organic Analyses," "Data Validation Guidelines for Non-CLP Organic Analyses" (March 1997), and the document entitled “PRC Comprehensive Long-term Environmental Action Navy II Analytical Services Statement of Work” (September 1998) were used along with other specified criteria in EPA methods. Data validation requirements are presented below.

I certify that all data validation criteria outlined in the above referenced documents were assessed, and any qualifications made to the data were in accordance with those documents.

Certified by Richard Amano
Principal Chemist

DATA VALIDATION REQUIREMENTS

Full validation includes all parameters listed below. Cursory validation parameters are indicated by an asterisk (*).

CLP Organic Parameters

*	Holding times
	GC/MS instrument performance check
*	Initial and continuing calibrations
*	Blanks
*	Surrogate recovery
*	Matrix spike/matrix spike duplicate
*	Laboratory control sample or blank spike
*	Field duplicates
*	Internal standard performance
	Target compound identification
	Tentatively identified compounds
	Compound quantitation
	Reported detection limits
	System performance
*	Overall assessment of data for the SDG

CLP Inorganic Parameters

*	Holding times
*	Initial and continuing calibrations
*	Blanks
*	Matrix spike
*	Laboratory control sample or blank spike
*	Field duplicates
*	Matrix duplicates
	ICP interference check sample
	GFAA quality control
*	ICP serial dilution
	Sample result verification
	Analyte quantitation
	Reported detection limits
*	Overall assessment of data for the SDG

Non-CLP Organic and Inorganic Parameters

*	Method compliance
*	Holding times
*	Initial and continuing calibrations
*	Blanks
*	Matrix spike/matrix spike duplicate
*	Laboratory control sample or blank spike
*	Field duplicates
*	Matrix duplicates
*	Surrogate recovery
	Analyte quantitation
	Reported detection limits
*	Overall assessment of data for the SDG

DATA VALIDATION QUALIFIERS AND CODES

Data Validation Qualifiers

UJ Estimated nondetected result

J Estimated detected result

R Rejected result

NJ Tentatively Identified Compound (TIC)

Data Validation Qualifier Codes

J1/R3 System performance

J2 Duplicate precision exceedance

J3/R2 Matrix spike, laboratory control sample (LCS), surrogate recovery exceedance

J4 Serial dilution

J5/R1 Holding time exceedance

J7/R7 Calibration exceedance

J8 Compound above calibration range

J9 ICP interference check sample

J0 Internal standard exceedance

U1 Laboratory blank contamination

U2 Field blank contamination

U4 Common laboratory contamination

G, D, M, L, H, Z TPH qualifiers

TABLE 1
SAMPLE CROSS REFERENCE TABLE
SAMPLE DELIVERY GROUP HAN25

Sample ID	Matrix	Date Collected	Quality Control ID	Validation Criteria*	Analyses												
					VOC (TO15)	TO-3C	TO-25C										
SGCSSG004	Air	11/13/02	MS/MSD/DUP	Full	X	X	X										
SGLPSG003	Air	11/13/02			X	X	X										
GMPFB005	Air	11/13/02	MS/MSD/DUP**, Field blank		X	X**	X										
GMP04ASG001A	Air	11/13/02			X	X	X										
GMP04ASG001B	Air	11/13/02			X	X	X										
GMP04ASG002	Air	11/13/02	Field duplicate of GMP04ASG001A & B		X	X	X										
GMP24SG001	Air	11/13/02			X	X	X										
GMP25SG001	Air	11/13/02		Full	X	X	X										
1R01MW16ASG004	Air	11/13/02	MS/MSD/DUP**	Full	X	X	X**										
GMP12SG005	Air	11/13/02			X	X	X										
GMP01ASG001	Air	11/13/02			X	X	X										
GMP02ASG001	Air	11/13/02			X	X	X										
GMP02ASG002	Air	11/13/02	MS/MSD/DUP**, Field duplicate of GMP02ASG001		X	X**	X										
1R01MW366ASG005	Air	11/13/02			X	X	X										
GMP08ASG001	Air	11/13/02			X	X	X										
GMP07ASG001	Air	11/13/02			X	X	X										
1R01MWI-5SG003	Air	11/13/02			X	X	X										
1R01MW18ASG003	Air	11/13/02	MS/MSD/DUP**	Full	X**	X	X										

* = Cursory validation performed on all samples
** = MS/MSD/DUP performed on indicated parameters only
DUP = Matrix duplicate
*** = Full review performed on indicated parameters only
VOC = Volatile Organic Compounds
MS/MSD = Matrix Spike/Matrix Spike Duplicate
HC = Hydrocarbons

DATA ASSESSMENT

VOLATILE ORGANIC ANALYSIS (EPA Method TO-15)

I. Holding Times

A. The 30 day analysis holding time requirement for air samples in summa-cannisters was met.

II. Surrogate Recovery

A. The surrogate percent recoveries (%R) were within the QC limits with the exceptions listed below.

B. Due to surrogate recovery problems, the following detected results are qualified as estimated (J3).

• All volatile compounds in samples	GMP24SG001	GMP01ASG001	GMP08ASG001
	GMP25SG001*	GMP02ASG001	1R01MWI-5SG003
	GMP12SG005	GMP02ASG002	1R01MW18ASG003*

The surrogates outside of QC limits are listed below.

Sample ID	Surrogate	% R	QC Limits
GMP24SG001	Bromofluorobenzene	289	60-130%
GMP25SG001*	Bromofluorobenzene	207	60-130%
GMP12SG005	Bromofluorobenzene	308	60-130%
GMP01ASG001	Bromofluorobenzene	146	60-130%
GMP02ASG001	Bromofluorobenzene	202	60-130%
GMP02ASG002	Bromofluorobenzene	202	60-130%
GMP08ASG001	Bromofluorobenzene	187	60-130%
1R01MWI-5SG003	Bromofluorobenzene	136	60-130%
1R01MW18ASG003*	Bromofluorobenzene	171	60-130%

High percent recoveries indicate that detected results may be biased high.

III. Matrix Spike/Matrix Spike Duplicate (MS/MSD)

A The MS/MSD analysis was performed on samples SGCSSG004* and 1R01MW18ASG003*. The percent recoveries (%R) and relative percent differences (RPD) were within the QC limits.

B The DUP analysis was performed on samples SGCSSG004* and 1R01MW18ASG003DL*. The relative percent differences (RPD) were within the QC limits.

IV. Blank Spike or Laboratory Control Sample (LCS)

A. The LCS QC samples were analyzed as required under the TTEMI SOW. The percent recoveries (%R) and relative percent differences (RPD) were within the QC limits.

V. Blank Contamination

A. Due to common laboratory contamination, the following results are considered nondetected (U4).

• Methylene chloride in samples	SGCSSG004* SGLPSG003 GMPFB005 GMP04ASG001A GMP04ASG001B GMP04ASG002 GMP24SG001 GMP25SG001* GMP25SG001DL*	1R01MW16ASG004* GMP12SG005 GMP12SG005DL GMP01ASG001 GMP01ASG001DL GMP02ASG001 GMP02ASG001DL GMP02ASG002 GMP02ASG002DL	1R01MW366ASG005 GMP08ASG001 GMP08ASG001DL GMP07ASG001 1R01MWI-5SG003 1R01MWI-5SG003DL 1R01MW18ASG003* 1R01MW18ASG003DL*
• Acetone in samples	SGLPSG003	GMPFB005	1R01MW366ASG005

Acetone, Methylene chloride, and 2-Butanone are considered common laboratory contaminants when found at levels less than 5x the CRQL in environmental samples and not found in the associated blanks.

B. No volatile contaminants were found in the method blanks.

C. Due to field blank contamination, the following results are considered nondetected (U2).

• Propylene in samples	SGCSSG004*	SGLPSG003	GMP08ASG001
• Dichlorodifluoromethane in samples	SGCSSG004* GMP25SG001DL*	SGLPSG003	GMP08ASG001
• Chloromethane in samples	SGCSSG004* SGLPSG003 GMP04ASG001A	GMP04ASG001B 1R01MW16ASG004*	GMP12SG005 1R01MW366ASG005
• Ethanol in samples	SGCSSG004* GMP04ASG001B	GMP24SG001	GMP25SG001*
• Carbon disulfide in samples	SGCSSG004* GMP04ASG001B 1R01MW18ASG003*	GMP04ASG002 GMP12SG005	GMP01ASG001 GMP08ASG001
• Toluene in samples	SGCSSG004* GMP04ASG001A GMP04ASG001B GMP04ASG002	GMP25SG001* GMP12SG005 GMP02ASG001 GMP02ASG002	GMP02ASG002DL 1R01MW366ASG005 GMP08ASG001 GMP07ASG001

The following compounds were detected in the associated field, trip, and equipment rinsate blanks at the concentrations noted below.

Field Blank ID	Compound	Concentration, ppbv/v
GMPFB005	Propylene	0.78

Field Blank ID	Compound	Concentration, ppbv/v
GMPFB005	Dichlorodifluoromethane	1.1
GMPFB005	Chloromethane	1.2
GMPFB005	Ethanol	34
GMPFB005	Carbon disulfide	0.72
GMPFB005	Toluene	0.68

Detected results less than 5x the blank contamination were qualified.

VI. Calibrations

A. Initial calibration was performed using required standard concentrations. Percent relative standard deviations (%RSD) were less than or equal to 25.0% for all volatile compounds for all volatile compounds.

B. Continuing calibration was performed at the required frequencies as stated in the method. All of the continuing calibration percent differences (%D) between the initial calibration RRF and the continuing calibration RRF were less than or equal to 25.0% .

VII. Internal Standards

A. All internal standard area counts were within -50% to +100% of the associated calibration standard and retention times were ±30 seconds of the associated calibration standard retention time.

VIII. Field Duplicate

A. The following RPDs were obtained for the field duplicate samples GMP04ASG001A / GMP04ASG002:

- 200% for Chloromethane
- 200% for Ethanol
- 200% for Isopropyl alcohol
- 136% for Carbon disulfide
- 200% for 1,2,4-Trimethylbenzene

The following RPDs were obtained for the field duplicate samples GMP04ASG001ADL / GMP04ASG002:

- 200% for Ethanol
- 200% for Acetone
- 199% for Methylene chloride
- 197% for Carbon disulfide
- 196% for Hexane
- 199% for Toluene
- 188% for m,p-Xylenes
- 192% for o-Xylene
- 200% for 1,3,5-Trimethylbenzene
- 200% for 1,2,4-Trimethylbenzene

- 200% for 1,1,2-Trichloro-1,2,2-trifluoroethane
- 200% for Trichlorofluoromethane
- 200% for 1,1-Dichloroethene
- 200% for Benzene
- 200% for Cyclohexane
- 200% for Trichloroethene
- 200% for Heptane
- 200% for Tetrachloroethene
- 200% for Ethylbenzene

The following RPDs were obtained for the field duplicate samples GMP04ASG002 / GMP04ASG001B:

- 200% for Chloromethane
- 200% for Chloroethane
- 200% for Ethanol
- 200% for 1,2,4-Trimethylbenzene

The following RPDs were obtained for the field duplicate samples GMP02ASG001 / GMP02ASG002:

- 200% for 1,1,2,2-Tetrachloroethane
- 200% for cis-1,2-Dichloroethene
- 200% for 4-Ethyltoluene
- 100% for Methylene chloride

The following RPDs were obtained for the field duplicate samples GMP02ASG001DL / GMP02ASG002DL:

- 200% for Benzene
- 200% for Toluene

For air samples, the field RPD guideline is ± 50%. The data are not qualified on the basis of field duplicate results.

IX. Other Qualifications

A. The following results are qualified as estimated (J).

- All VOA detected results reported below the RL.

Detected results reported below the RL are considered to be qualitatively acceptable, but quantitatively unreliable due to the uncertainty in analytical precision near the limit of detection.

B. The following detected results are qualified as estimated (J8).

• Ethanol in sample	GMP04ASG001A
• Propylene and Acetone in sample	GMP24SG001
• Cyclohexane in sample	1R01MW16ASG004*

• Propylene in samples	GMP02ASG001	GMP02ASG002
• Propylene, Hexane, and Heptane in samples	1R01MWI-5SG003	1R01MW18ASG003*

The above listed sample results exceeded the calibration range.

Full Validation Criteria for Samples SGCSSG004*, GMP25SG001*, GMP25SG001DL*, 1R01MW16ASG004*, 1R01MW18ASG003*, and 1R01MW18ASG003DL*

X. GC/MS Instrument Performance Checks

A. The ion abundance criteria were met for the bromofluorobenzene (BFB) GC/MS instrument performance check. The samples were analyzed within 12 hours of the associated instrument performance check.

XI. Target Compound List (TCL) Identification

A. The relative retention times, mass spectra, and peak identifications of the samples were evaluated. Target compound identification was considered to be correct with the exceptions listed below.

B. The following detected result retention time (RT) were outside the QC limits as shown below.

Sample ID	Compound	QC Limits
SGCSSG004*	Acetone and Ethanol	±0.06 of the Standard

XII. Compound Quantitation and Reported Detection Limits

A. Sample results were recalculated with the proper dilution factors, weights, volumes, and percent moisture used to calculate the sample results. The samples were found to be correctly quantitated. The reported detection limits were consistent with Tetra Tech EMI's required report limits and reflect any dilutions, weights, volumes, and percent moisture.

XIII. Tentatively Identified Compounds (TICs)

A. The TIC library searches were not performed for this SDG.

XIV. System Performance

A. The samples were evaluated for reconstructed ion chromatogram (RIC) baseline shifts, extraneous peaks, loss of resolution, and peak tailing. No system degradation was noted.

FIXED GASES (O_2, N_2, CO, CO_2, and Methane) ANALYSIS (by EPA Method TO-3C)

I. Holding Times

A. The 30 day analysis holding time requirement for air samples in summa-cannisters was met.

II. Surrogate Recovery

A. Surrogates were not required by the method.

III. Matrix Spike/Matrix Spike Duplicate (MS/MSD)

A The MS/MSD analysis was performed on samples GMPFB005, GMP02ASG002, and GMP23001. The percent recoveries (%R) and relative percent differences (RPD) were within the QC limits.

B The DUP analysis was performed on samples SGCSSG004, GMPFB005, GMP02ASG002, and GMP23001. The relative percent differences (RPD) were within the QC limits.

IV. Blank Spike or Laboratory Control Sample (LCS)

A. The LCS QC samples were analyzed as required under the TTEMI SOW. The percent recoveries (%R) and relative percent differences (RPD) were within the QC limits.

V. Blank Contamination

A. No results were qualified based on the method blank contamination.

B. Due to field blank contamination, the following results are considered nondetected (U2).

- Oxygen in samples

SGCSSG004*	GMP25SG001*	1R01MW366ASG005
SGLPSG003	1R01MW16ASG004*	GMP08ASG001
GMP04ASG001A	GMP12SG005	GMP07ASG001
GMP04ASG001B	GMP01ASG001	1R01MWI-5SG003
GMP04ASG002	GMP02ASG001	1R01MW18ASG003*
GMP24SG001	GMP02ASG002	

The following compounds were detected in the associated field blank at the concentrations noted below.

Field Blank ID	Compound	Concentration
GMPFB005	Oxygen	18%

Detected results less than 5x the blank contamination were qualified.

VI. Calibrations

A. Initial calibration of compounds was performed as required by the method. The percent relative standard deviations (%RSD) of calibration factors for compounds were less than or equal to 25.0% .

B. Calibration verification was performed at required frequencies. The percent differences (%D) of amounts in continuing standard mixtures were within the 25.0% QC limits.

VII. Field Duplicate

A. No RPDs above 50% were obtained for the field duplicate samples GMP04ASG001A / GMP04ASG002, GMP04ASG002 / GMP04ASG001B, and GMP02ASG001 / GMP02ASG002.

VIII. Other Qualifications

A. No results were reported below the RL.

Full Validation Criteria for Samples SGCSSG004*, GMP25SG001*, 1R01MW16ASG004*, and 1R01MW18ASG003*

IX. Compound Quantitation and Reported Detection Limits

A. Sample results were recalculated, with the proper dilution factors, weights, volumes, and percent moisture used to calculate the sample results. The samples were found to be correctly quantitated. The reported detection limits were consistent with Tetra Tech EMI's required report limits and reflect any dilutions, weights, volumes, and percent moisture.

X. System Performance

A. The samples were evaluated for baseline shifts, extraneous peaks, loss of resolution, and peak tailing. No system degradation was noted.

XI. Compound Identification

A. Target compound identification was considered to be correct for samples SGCSSG004*, GMP25SG001*, 1R01MW16ASG004*, and 1R01MW18ASG003*.

NON-METHANE HYDROCARBONS (TNMHC) and METHANE ANALYSIS
(by EPA Method TO-25C)

I. Holding Times

A. The 30 day analysis holding time requirement for air samples in summa-cannisters was met.

II. Surrogate Recovery

A. Surrogates were not required by the method.

III. Matrix Spike/Matrix Spike Duplicate (MS/MSD)

A The MS/MSD analysis was performed on samples 1R01MW16ASG004 and GMP23001. The percent recoveries (%R) and relative percent differences (RPD) were within the QC limits.

B The DUP analysis was performed on samples SGCSSG004, 1R01MW16ASG004, and GMP23001. The relative percent differences (RPD) were within the QC limits.

IV. Blank Spike or Laboratory Control Sample (LCS)

A. The LCS QC samples were analyzed as required under the TTEMI SOW. The percent recoveries (%R) and relative percent differences (RPD) were within the QC limits.

V. Blank Contamination

A. No non-methane hydrocarbon or methane contaminants were found in the method blanks.

B. Due to field blank contamination, the following results are considered nondetected (U2).

- Methane in sample SGLPSG003

The following compounds were detected in the associated field blank at the concentrations noted below.

Field Blank ID	Compound	Concentration
GMPFB005	Methane	1.5 ppmv

Detected results less than 5x the blank contamination were qualified.

VI. Calibrations

A. Initial calibration of compounds was performed as required by the method. The percent relative standard deviations (%RSD) of calibration factors for compounds were less than or equal to 25.0% .

B. Calibration verification was performed at required frequencies. The percent differences (%D) of amounts in continuing standard mixtures were within the 25.0% QC limits.

VII. Field Duplicate

A. The following RPDs were obtained for the field duplicate samples GMP04ASG001A / GMP04ASG002:

- 109% for TNMHC

The following RPDs were obtained for the field duplicate samples GMP04ASG001B / GMP04ASG002:

- 107% for TNMHC

No RPDs above 50% were obtained for the field duplicate samples GMP02ASG001 / GMP02ASG002:

For air samples, the field RPD guideline is ± 50%. The data are not qualified on the basis of field duplicate results.

VIII. Other Qualifications

A. No results were reported below the RL.

Full Validation Criteria for Samples SGCSSG004*, GMP25SG001*, 1R01MW18SG003*, and IR01MW16ASG004*

IX. Compound Quantitation and Reported Detection Limits

A. Sample results were recalculated, with the proper dilution factors, weights, volumes, and percent moisture used to calculate the sample results. The samples were found to be correctly quantitated. The reported detection limits were consistent with Tetra Tech EMI's required report limits and reflect any dilutions, weights, volumes, and percent moisture.

X. System Performance

A. The samples were evaluated for baseline shifts, extraneous peaks, loss of resolution, and peak tailing. No system degradation was noted.

XI. Compound Identification

A. Target compound identification was considered to be correct for samples SGCSSG004*, GMP25SG001*, 1R01MW18SG003*, and IR01MW16ASG004*.

OVERALL ASSESSMENT OF DATA

I. Method Compliance and Additional Comments

A. All analyses were conducted within all specifications of the requested method with the exceptions listed below.

- For the volatile analysis, the following RT was outside the QC limits for Acetone and Ethanol for sample SGCSSG004*.

II. Usability

Volatile Organic Analysis

A. No results for volatile analysis were rejected in this SDG.

B. Due to common laboratory and field blank contamination, surrogate, and compound quantitation problems in the volatile analysis, several samples were qualified as estimated. The findings were as follows:

- Due to common laboratory contamination problems, Methylene chloride was qualified nondetect in twenty-six samples and Acetone was qualified nondetect in three samples.

- Due to field blank contamination problems, Propylene was qualified nondetect in three samples, Dichlorodifluoromethane and Ethanol were qualified nondetect in four samples, Chloromethane was qualified nondetect in seven samples, Carbon disulfide was qualified nondetect in seven samples, and Toluene was qualified nondetect in twelve samples.

- Due to surrogate recovery problems, all volatile detected results were qualified as estimated in nine samples.

- All detected results reported below the RL were qualified as estimated.

- Due to compound quantitation problems, Ethanol, Acetone, and Cyclohexane detected results were qualified as estimated in one sample, Propylene detected results were qualified as estimated in five samples, and Hexane and Heptane detected results were qualified as estimated in two samples.

C. Samples GMP04ASG001A, GMP24SG001, GMP25SG001*, GMP12SG005, GMP01ASG001, GMP02ASG001, GMP02ASG002, GMP08ASG001, 1R01MWI-5SG003, and 1R01MW18ASG003* were diluted due to sample results exceeding the calibration range. For sample GMP04ASG001A, all volatile results except Ethanol should be considered the most usable. The Ethanol results for sample GMP04ASG001ADL should be considered the most usable. For sample GMP24SG001, all volatile results except Propylene and Acetone should be considered the most usable. The Propylene and Acetone results for sample GMP24SG001DL should be considered the most usable. For samples GMP02ASG001 and GMP02ASG002, all volatile results except Propylene should be considered the most usable. The Propylene results for samples GMP02ASG001DL and GMP02ASG002DL should be considered the most usable. For samples 1R01MWI-5SG003 and 1R01MW18ASG003*, all volatile results except Propylene, Hexane, and Heptane should be considered the most usable. The Propylene, Hexane, and Heptane results for samples 1R01MWI-5SG003DL and 1R01MW18ASG003DL* should be considered the most usable. For samples GMP25SG001*, GMP12SG005, GMP01ASG001, and GMP08ASG001 all volatile results should be considered the most usable. The volatile results for samples GMP25SG001DL*, GMP12SG005DL, GMP01ASG001DL, and GMP08ASG001DL should not be considered usable.

Fixed Gases Analysis

A. No results for fixed gases analysis were rejected in this SDG.

B. Due to field blank contamination problems in the fixed gases analysis, several samples were qualified as estimated. The findings were as follows:

- Due to field blank contamination problems, Oxygen was qualified nondetect in seventeen samples.

C. No samples were reextracted or reanalyzed for fixed gases analysis in this SDG.

Non-Methane Hydrocarbons and Methane Analysis

A. No results for non-methane hydrocarbons and methane analysis were rejected in this SDG.

B. Due to field blank contamination problems in the non-methane hydrocarbons and methane analysis, several samples were qualified as estimated. The findings were as follows:

- Due to field blank contamination problems, Methane was qualified nondetect in one sample.

C. No samples were reextracted or reanalyzed for non-methane hydrocarbons and methane analysis in this SDG.

III. The quality control criteria reviewed, other than those discussed above, were met and are considered acceptable. Sample results that were found to be estimated (J) are usable for limited purposes only. Based upon the full and cursory data validation, all other results are considered valid and usable for all purposes.

ATTACHMENT C2
VALIDATED ANALYTICAL DATA

APPENDIX C
QUARTERLY ANALYTICAL RESULTS

Parcel E Nonstandard Data Gaps Investigation, Landfill Gas Characterization, Hunters Point Shipyard, San Francisco, California

Sample Location ID	830 CRAWL	830 CRAWL	830 CRAWL	830 CRAWL	AMBIENT AIR	EX1
Sample ID	SGCSSG001	SGCSSG002	SGCSSG003	SGCSSG004	GMPAA002	EX1002
Sample Date	04/03/2002	06/05/2002	08/01/2002	11/13/2002	05/22/2002	11/13/2002
EPA TO-14 VOA (µg/m3)						
1,1,1-TRICHLOROETHANE	ND	ND	ND	ND	ND	ND
1,1,2,2-TETRACHLOROETHANE	ND	ND	ND	ND	ND	ND
1,1,2-TRICHLORO-1,2,2-TRIFLUOROETHANE	ND	ND	ND	ND	20	ND
1,1,2-TRICHLOROETHANE	ND	ND	ND	ND	ND	180 J
1,1-DICHLOROETHANE	ND	ND	ND	ND	ND	ND
1,1-DICHLOROETHENE	ND	ND	ND	ND	ND	ND
1,2,4-TRICHLOROBENZENE	ND	ND	ND	ND	ND	ND
1,2,4-TRIMETHYLBENZENE	ND	ND	4 J	ND	ND	14 J
1,2-DIBROMOETHANE	ND	ND	ND	ND	ND	ND
1,2-DICHLORO-1,1,2,2-TETRAFLUOROETHANE	ND	ND	ND	ND	ND	51 J
1,2-DICHLOROBENZENE	ND	ND	ND	ND	ND	ND
1,2-DICHLOROETHANE	ND	ND	ND	ND	ND	ND
1,2-DICHLOROPROPANE	ND	ND	ND	ND	ND	ND
1,3,5-TRIMETHYLBENZENE	ND	ND	ND	ND	ND	9 J
1,3-BUTADIENE	ND	ND	ND	ND	ND	ND
1,3-DICHLOROBENZENE	ND	ND	ND	ND	ND	ND
1,4-DICHLOROBENZENE	ND	ND	ND	ND	ND	ND
1,4-DIOXANE	ND	ND	ND	ND	ND	ND
2-BUTANONE	ND	ND	ND	ND	ND	290 J
2-HEXANONE	ND	ND	ND	ND	ND	ND
4-ETHYLTOLUENE	ND	ND	ND	ND	ND	ND
4-METHYL-2-PENTANONE	ND	ND	ND	ND	ND	ND
ACETONE	ND	14	46	51	60	ND
BENZENE	ND	3	ND	ND	ND	28 J
BENZYL CHLORIDE	ND	ND	ND	ND	ND	ND
BROMODICHLOROMETHANE	ND	ND	ND	ND	ND	ND
BROMOFORM	ND	ND	ND	ND	ND	ND
BROMOMETHANE	ND	ND	ND	ND	ND	ND
CARBON DISULFIDE	ND	ND	16	ND	ND	5 J
CARBON TETRACHLORIDE	ND	ND	ND	ND	ND	ND
CHLOROBENZENE	ND	ND	ND	ND	ND	ND
CHLOROETHANE	ND	ND	ND	ND	ND	5 J
CHLOROFORM	ND	ND	ND	ND	ND	ND
CHLOROMETHANE	3 J	ND	2 J	ND	ND	ND
CIS-1,2-DICHLOROETHENE	ND	ND	ND	ND	ND	3 J
CIS-1,3-DICHLOROPROPENE	ND	ND	ND	ND	ND	ND

APPENDIX C
QUARTERLY ANALYTICAL RESULTS (Continued)

Parcel E Nonstandard Data Gaps Investigation, Landfill Gas Characterization, Hunters Point Shipyard, San Francisco, California

Sample Location ID	830 CRAWL	830 CRAWL	830 CRAWL	830 CRAWL	AMBIENT AIR	EX1
Sample ID	SGCSSG001	SGCSSG002	SGCSSG003	SGCSSG004	GMPAA002	EX1002
Sample Date	04/03/2002	06/05/2002	08/01/2002	11/13/2002	05/22/2002	11/13/2002
EPA TO-14 VOA (µg/m3)						
CYCLOHEXANE	ND	ND	9	ND	ND	30 J
DIBROMOCHLOROMETHANE	ND	ND	ND	ND	ND	ND
DICHLORODIFLUOROMETHANE	9 J	6	5 J	ND	ND	60 J
ETHANOL	6 J	3	14	ND	ND	ND
ETHYLBENZENE	ND	ND	ND	ND	ND	11 J
HEPTANE	ND	ND	ND	ND	ND	87 J
HEXACHLOROBUTADIENE	ND	ND	ND	ND	ND	11 J
HEXANE	NA	ND	3 J	ND	7	460 J
ISOPROPYL ALCOHOL	ND	ND	ND	ND	ND	ND
M,P-XYLENES	19	ND	10	6 J	10	21 J
METHYLENE CHLORIDE	ND	ND	ND	ND	ND	ND
N-HEXANE	9 J	NA	NA	NA	NA	NA
O-XYLENE	7 J	ND	ND	ND	ND	16 J
PROPYLENE	9	ND	5	ND	5	96 J
STYRENE	ND	ND	ND	ND	ND	ND
TERT-BUTYL METHYL ETHER	ND	ND	ND	ND	ND	ND
TETRACHLOROETHENE	12 J	ND	ND	ND	ND	6 J
TETRAHYDROFURAN	ND	ND	ND	ND	ND	4,500
TOLUENE	10 J	ND	8	ND	14	18 J
TRANS-1,2-DICHLOROETHENE	ND	ND	ND	ND	ND	ND
TRANS-1,3-DICHLOROPROPENE	ND	ND	ND	ND	ND	ND
TRICHLOROETHENE	ND	ND	ND	ND	ND	8 J
TRICHLOROFLUOROMETHANE	ND	ND	ND	ND	ND	ND
VINYL ACETATE	ND	ND	ND	ND	ND	ND
VINYL CHLORIDE	ND	ND	ND	ND	ND	2 J
EPA 3C Landfill Gas (%)						
CARBON DIOXIDE	0.1 J	ND	ND	ND	ND	NA
CARBON MONOXIDE	ND	ND	ND	ND	ND	NA
METHANE	0.1 J	ND	ND	ND	ND	NA
NITROGEN	81	80	81	82	80	NA
OXYGEN	20 J	19	18	18	20	NA
EPA 25C Total Nonmethane Organic Carbon (ppmv)						
METHANE	580	230	40	20	ND	NA
NONMETHANE ORGANIC CARBON	ND	ND	0.2	6	ND	NA

APPENDIX C
QUARTERLY ANALYTICAL RESULTS (Continued)

Parcel E Nonstandard Data Gaps Investigation, Landfill Gas Characterization, Hunters Point Shipyard, San Francisco, California

Sample Location ID	EX10	EX10	EX2	EX3	EX4	EX5	EX6
Sample ID	EX10002	EX10003	EX2001	EX3002	EX4001	EX5002	EX6001
Sample Date	11/13/2002	11/13/2002	11/13/2002	11/13/2002	11/13/2002	11/13/2002	11/13/2002
EPA TO-14 VOA (µg/m3)							
1,1,1-TRICHLOROETHANE	15	14	ND	18 J	17 J	18 J	40
1,1,2,2-TETRACHLOROETHANE	18	17	ND	ND	ND	ND	ND
1,1,2-TRICHLORO-1,2,2-TRIFLUOROETHANE	23	22	ND	29 J	32 J	30 J	58
1,1,2-TRICHLOROETHANE	13	13	ND	ND	19 J	18 J	43
1,1-DICHLOROETHANE	11	10	ND	ND	18 J	18 J	35
1,1-DICHLOROETHENE	10	8	ND	13 J	16 J	15 J	30
1,2,4-TRICHLOROBENZENE	ND	ND	ND	ND	ND	59 J	110
1,2,4-TRIMETHYLBENZENE	8	9	19	600 J	1,100 J	420 J	190
1,2-DIBROMOETHANE	19	16	ND	20 J	23 J	24 J	59
1,2-DICHLORO-1,1,2,2-TETRAFLUOROETHANE	32	29	14	41 J	39 J	41 J	63
1,2-DICHLOROBENZENE	9	9	ND	2,200 J	100 J	150 J	73
1,2-DICHLOROETHANE	11	10	ND	ND	ND	ND	29
1,2-DICHLOROPROPANE	14	11	ND	17 J	17 J	18 J	35
1,3,5-TRIMETHYLBENZENE	12	10	14	550 J	600 J	350 J	220
1,3-BUTADIENE	5	4	ND	ND	ND	ND	ND
1,3-DICHLOROBENZENE	ND	9	ND	92 J	32 J	27 J	57
1,4-DICHLOROBENZENE	11	10	21	490 J	92 J	98 J	67
1,4-DIOXANE	ND	ND	ND	ND	ND	ND	ND
2-BUTANONE	130	130	ND	280 J	630 J	1,000 J	150
2-HEXANONE	ND	ND	ND	ND	ND	ND	ND
4-ETHYLTOLUENE	8	7	ND	120 J	260 J	97 J	75
4-METHYL-2-PENTANONE	ND	ND	ND	ND	ND	ND	ND
ACETONE	ND	ND	ND	530 J	2,100	4,600	2,000
BENZENE	10	9	5	46 J	140 J	160 J	49
BENZYL CHLORIDE	ND	ND	ND	ND	ND	ND	ND
BROMODICHLOROMETHANE	18	16	21	61 J	ND	67 J	56
BROMOFORM	28	24	ND	ND	ND	ND	83
BROMOMETHANE	11	10	ND	51 J	21 J	47 J	43
CARBON DISULFIDE	18	21	ND	1,700 J	1,300 J	2,200	980
CARBON TETRACHLORIDE	19	17	ND	19 J	21 J	22 J	53
CHLOROBENZENE	13	11	ND	ND	ND	410 J	56
CHLOROETHANE	7	6	ND	83 J	64 J	100 J	48
CHLOROFORM	20	18	12	49 J	16 J	23 J	39
CHLOROMETHANE	ND	ND	ND	710 J	780 J	2,000	500
CIS-1,2-DICHLOROETHENE	10	9	ND	16 J	32 J	37 J	32
CIS-1,3-DICHLOROPROPENE	9	9	ND	12 J	15 J	15 J	31

APPENDIX C
QUARTERLY ANALYTICAL RESULTS (Continued)

Parcel E Nonstandard Data Gaps Investigation, Landfill Gas Characterization, Hunters Point Shipyard, San Francisco, California

Sample Location ID	EX10	EX10	EX2	EX3	EX4	EX5	EX6
Sample ID	EX10002	EX10003	EX2001	EX3002	EX4001	EX5002	EX6001
Sample Date	11/13/2002	11/13/2002	11/13/2002	11/13/2002	11/13/2002	11/13/2002	11/13/2002
EPA TO-14 VOA (µg/m3)							
CYCLOHEXANE	10	8	190	380 J	350 J	380 J	110
DIBROMOCHLOROMETHANE	21	18	ND	ND	26 J	28 J	64
DICHLORODIFLUOROMETHANE	17	15	44	80 J	70 J	70 J	180
ETHANOL	ND	ND	ND	100 J	ND	ND	ND
ETHYLBENZENE	10	9	8	190 J	480 J	250 J	79
HEPTANE	12	10	27	370 J	920 J	710 J	120
HEXACHLOROBUTADIENE	33	27	ND	ND	ND	44 J	180
HEXANE	16	16	140	460 J	790 J	610 J	140
ISOPROPYL ALCOHOL	ND	ND	ND	250 J	130 J	180 J	ND
M,P-XYLENES	21	20	35	1,300 J	1,400 J	1,100 J	240
METHYLENE CHLORIDE	64	71	ND	85 J	130 J	100 J	110
O-XYLENE	11	10	26	840 J	1,100 J	700 J	170
PROPYLENE	ND	ND	770	14,000	19,000	32,000	4,900
STYRENE	9	8	ND	ND	ND	36 J	43
TERT-BUTYL METHYL ETHER	ND	6	ND	ND	ND	ND	40
TETRACHLOROETHENE	18	17	ND	39 J	39 J	110 J	63
TETRAHYDROFURAN	10,000	9,300	600	1,100	1,100	1,400	33
TOLUENE	19	19	ND	100 J	310 J	120 J	61
TRANS-1,2-DICHLOROETHENE	11	10	ND	14 J	16 J	18 J	28
TRANS-1,3-DICHLOROPROPENE	8	7	ND	11 J	7 J	14 J	27
TRICHLOROETHENE	15	14	ND	29 J	34 J	66 J	47
TRICHLOROFLUOROMETHANE	19	18	ND	19 J	20 J	21 J	47
VINYL ACETATE	ND	ND	ND	ND	ND	ND	ND
VINYL CHLORIDE	7	6	ND	10 J	15 J	16 J	22

APPENDIX C
QUARTERLY ANALYTICAL RESULTS (Continued)

Parcel E Nonstandard Data Gaps Investigation, Landfill Gas Characterization, Hunters Point Shipyard, San Francisco, California

Sample Location ID	FB	SG01	SG01	SG01C	SG01C	SG01C
Sample ID	FB001	SG01SG001	SG01SG002	SG01SG003	SG01SG004	SG01SG005
Sample Date	11/13/2002	03/27/2002	03/27/2002	04/02/2002	04/02/2002	04/02/2002
EPA TO-14 VOA (µg/m3)						
1,1,1-TRICHLOROETHANE	ND	ND	ND	5 J	ND	ND
1,1,2,2-TETRACHLOROETHANE	ND	ND	ND	ND	ND	ND
1,1,2-TRICHLORO-1,2,2-TRIFLUOROETHANE	ND	ND	7 J	13 J	ND	ND
1,1,2-TRICHLOROETHANE	ND	ND	ND	ND	ND	ND
1,1-DICHLOROETHANE	ND	62	41 J	ND	ND	ND
1,1-DICHLOROETHENE	ND	ND	ND	ND	ND	ND
1,2,4-TRICHLOROBENZENE	ND	ND	ND	ND	ND	ND
1,2,4-TRIMETHYLBENZENE	ND	4,500	ND	450 J	410	590 J
1,2-DIBROMOETHANE	ND	ND	ND	ND	ND	ND
1,2-DICHLORO-1,1,2,2-TETRAFLUOROETHANE	ND	450	230	250 J	110	240 J
1,2-DICHLOROBENZENE	ND	42 J	ND	51 J	37	80 J
1,2-DICHLOROETHANE	ND	23 J	13 J	10 J	4 J	ND
1,2-DICHLOROPROPANE	ND	5 J	6 J	ND	ND	ND
1,3,5-TRIMETHYLBENZENE	ND	1,100	ND	530 J	380	740 J
1,3-BUTADIENE	ND	ND	ND	ND	ND	ND
1,3-DICHLOROBENZENE	ND	42 J	24 J	20 J	5 J	9 J
1,4-DICHLOROBENZENE	ND	880	510	120 J	57	150 J
1,4-DIOXANE	ND	ND	ND	ND	ND	ND
2-BUTANONE	ND	ND	ND	66 J	65	170 J
2-HEXANONE	ND	ND	ND	ND	ND	ND
4-ETHYLTOLUENE	ND	830	ND	130 J	83	160 J
4-METHYL-2-PENTANONE	ND	ND	ND	ND	ND	ND
ACETONE	17	ND	ND	860 J	760	560 J
BENZENE	ND	760	440	34 J	17	39 J
BENZYL CHLORIDE	ND	ND	ND	ND	ND	ND
BROMODICHLOROMETHANE	ND	ND	ND	ND	ND	ND
BROMOFORM	ND	ND	ND	23 J	ND	ND
BROMOMETHANE	ND	ND	ND	18 J	ND	ND
CARBON DISULFIDE	ND	9 J	20 J	480 J	78	45 J
CARBON TETRACHLORIDE	ND	ND	ND	ND	640	ND
CHLOROBENZENE	ND	1,800	1,600	ND	ND	ND
CHLOROETHANE	ND	270	170	50 J	15	39 J
CHLOROFORM	ND	ND	4 J	ND	ND	ND
CHLOROMETHANE	2	10 J	ND	44 J	16	31 J
CIS-1,2-DICHLOROETHENE	ND	24 J	12 J	12 J	4 J	10 J
CIS-1,3-DICHLOROPROPENE	ND	ND	ND	ND	ND	ND

APPENDIX C
QUARTERLY ANALYTICAL RESULTS (Continued)

Parcel E Nonstandard Data Gaps Investigation, Landfill Gas Characterization, Hunters Point Shipyard, San Francisco, California

Sample Location ID	FB	SG01	SG01	SG01C	SG01C	SG01C
Sample ID	FB001	SG01SG001	SG01SG002	SG01SG003	SG01SG004	SG01SG005
Sample Date	11/13/2002	03/27/2002	03/27/2002	04/02/2002	04/02/2002	04/02/2002
EPA TO-14 VOA (µg/m3)						
CYCLOHEXANE	ND	1,800	1,700	780 J	ND	650 J
DIBROMOCHLOROMETHANE	ND	ND	ND	ND	ND	ND
DICHLORODIFLUOROMETHANE	ND	950	340	71 J	100	220 J
ETHANOL	19	ND	ND	500 J	ND	ND
ETHYLBENZENE	ND	480	53 J	140 J	48	99 J
HEPTANE	ND	2,200	690	260 J	170	320 J
HEXACHLOROBUTADIENE	ND	ND	ND	ND	ND	ND
HEXANE	ND	NA	NA	NA	NA	NA
ISOPROPYL ALCOHOL	ND	3 J	2 J	ND	ND	ND
M,P-XYLENES	ND	1,000	230	1,200 J	520	1,200 J
METHYLENE CHLORIDE	ND	ND	ND	ND	560	ND
N-HEXANE	NA	2,700	2,200	1,000 J	780	730 J
O-XYLENE	ND	320	53 J	920 J	370	860 J
PROPYLENE	2	3,600	1,700	360 J	610	530 J
STYRENE	ND	4 J	ND	14 J	10	28 J
TERT-BUTYL METHYL ETHER	ND	ND	ND	ND	ND	ND
TETRACHLOROETHENE	ND	8 J	14 J	16 J	6 J	9 J
TETRAHYDROFURAN	ND	13 J	7 J	4 J	ND	ND
TOLUENE	3	96	ND	66 J	210	81 J
TRANS-1,2-DICHLOROETHENE	ND	80	44 J	10 J	ND	ND
TRANS-1,3-DICHLOROPROPENE	ND	ND	ND	ND	ND	ND
TRICHLOROETHENE	ND	ND	11 J	17 J	9	15 J
TRICHLOROFLUOROMETHANE	ND	ND	ND	5 J	6 J	ND
VINYL ACETATE	ND	ND	ND	ND	ND	ND
VINYL CHLORIDE	ND	290	99	6 J	3 J	9 J
EPA 3C Landfill Gas (%)						
CARBON DIOXIDE	NA	27 J	26 J	21 J	ND	ND
CARBON MONOXIDE	NA	ND	ND	ND	ND	ND
METHANE	NA	63 J	56 J	ND	ND	ND
NITROGEN	NA	9	18	31	59	43
OXYGEN	NA	1	0.8	3	12	5
EPA 25C Total Non-Methane Organic Carbon (ppmv)						
METHANE	NA	630,000 J	560,000 J	460,000 J	220,000 J	380,000 J
NON-METHANE ORGANIC CARBON	NA	48	46	41	27	40

APPENDIX C
QUARTERLY ANALYTICAL RESULTS (Continued)

Parcel E Nonstandard Data Gaps Investigation, Landfill Gas Characterization, Hunters Point Shipyard, San Francisco, California

Sample Location ID	SG01D	SG01D	SG01E	SG02	SG02	SG02A	SG02A
Sample ID	SG01SG006	SG01SG007	SG01SG008	SG02SG008	SG02SG009	SG02SG001	SG02SG002
Sample Date	04/02/2002	04/02/2002	04/04/2002	04/04/2002	04/04/2002	03/28/2002	03/28/2002
EPA TO-14 VOA (µg/m3)							
1,1,1-TRICHLOROETHANE	ND	ND	ND	ND	ND	ND	ND
1,1,2,2-TETRACHLOROETHANE	ND	ND	ND	ND	ND	ND	ND
1,1,2-TRICHLORO-1,2,2-TRIFLUOROETHANE	9 J	ND	ND	ND	ND	7 J	6 J
1,1,2-TRICHLOROETHANE	ND	ND	ND	ND	ND	5 J	ND
1,1-DICHLOROETHANE	5 J	ND	ND	ND	17 J	37	39
1,1-DICHLOROETHENE	3 J	ND	ND	ND	ND	4 J	3 J
1,2,4-TRICHLOROBENZENE	140 J	22 J	ND	ND	ND	23 J	23 J
1,2,4-TRIMETHYLBENZENE	28,000 J	510	ND	77 J	96 J	160	12 J
1,2-DIBROMOETHANE	6 J	ND	ND	ND	ND	ND	ND
1,2-DICHLORO-1,1,2,2-TETRAFLUOROETHANE	630 J	240	ND	610 J	700 J	230	270
1,2-DICHLOROBENZENE	16 J	9 J	ND	ND	ND	33 J	24 J
1,2-DICHLOROETHANE	5 J	ND	ND	ND	10 J	14 J	12 J
1,2-DICHLOROPROPANE	ND	ND	ND	ND	ND	6 J	6 J
1,3,5-TRIMETHYLBENZENE	18,000 J	250	ND	30 J	33 J	33 J	15 J
1,3-BUTADIENE	5 J	3 J	17	ND	ND	ND	ND
1,3-DICHLOROBENZENE	ND	5 J	ND	ND	ND	70	48
1,4-DICHLOROBENZENE	10 J	35 J	ND	23 J	29 J	480	350
1,4-DIOXANE	ND	4 J	ND	ND	ND	ND	ND
2-BUTANONE	ND	ND	50	ND	ND	130	ND
2-HEXANONE	ND	ND	13	ND	ND	ND	ND
4-ETHYLTOLUENE	9,200 J	110	ND	ND	ND	30	5 J
4-METHYL-2-PENTANONE	ND	ND	5 J	ND	ND	490	ND
ACETONE	4,400 J	ND	150	ND	ND	110	ND
BENZENE	32 J	ND	9	85 J	96 J	140	110
BENZYL CHLORIDE	ND	ND	ND	ND	ND	ND	ND
BROMODICHLOROMETHANE	ND	ND	ND	ND	ND	ND	ND
BROMOFORM	ND	ND	ND	ND	ND	ND	ND
BROMOMETHANE	52 J	3 J	ND	ND	ND	3 J	ND
CARBON DISULFIDE	33 J	10 J	4 J	ND	ND	37	6 J
CARBON TETRACHLORIDE	ND	ND	ND	ND	ND	ND	ND
CHLOROBENZENE	ND	ND	ND	ND	310 J	920	960
CHLOROETHANE	74 J	19 J	ND	180 J	200 J	110	110
CHLOROFORM	9 J	4 J	5 J	ND	ND	ND	ND
CHLOROMETHANE	250 J	11 J	2 J	ND	ND	ND	ND
CIS-1,2-DICHLOROETHENE	5 J	4 J	ND	36 J	38 J	12 J	14 J
CIS-1,3-DICHLOROPROPENE	ND	ND	ND	ND	ND	ND	ND

APPENDIX C
QUARTERLY ANALYTICAL RESULTS (Continued)

Parcel E Nonstandard Data Gaps Investigation, Landfill Gas Characterization, Hunters Point Shipyard, San Francisco, California

Sample Location ID	SG01D	SG01D	SG01E	SG02	SG02	SG02A	SG02A
Sample ID	SG01SG006	SG01SG007	SG01SG008	SG02SG008	SG02SG009	SG02SG001	SG02SG002
Sample Date	04/02/2002	04/02/2002	04/04/2002	04/04/2002	04/04/2002	03/28/2002	03/28/2002
EPA TO-14 VOA (µg/m3)							
CYCLOHEXANE	430 J	150	6	1,600 J	1,800 J	1,700	1,800
DIBROMOCHLOROMETHANE	ND	ND	ND	ND	ND	ND	ND
DICHLORODIFLUOROMETHANE	330 J	110	4 J	260 J	290 J	350	350
ETHANOL	130 J	ND	3	ND	ND	32	55
ETHYLBENZENE	28,000 J	260	3 J	28 J	30 J	22 J	22 J
HEPTANE	1,900 J	20 J	11	1,000 J	1,200 J	1,100	900
HEXACHLOROBUTADIENE	27 J	36 J	ND	ND	ND	ND	ND
ISOPROPYL ALCOHOL	ND	ND	ND	ND	ND	ND	7 J
M,P-XYLENES	57,000 J	1,200	5 J	31 J	41 J	27 J	21 J
METHYLENE CHLORIDE	ND	ND	ND	ND	ND	ND	ND
N-HEXANE	270 J	72	22	1,600 J	2,000 J	2,100	2,200
O-XYLENE	37,000 J	670	ND	23 J	36 J	20 J	8 J
PROPYLENE	2,200 J	600	250	2,400 J	2,200 J	1,200	1,300
STYRENE	5 J	ND	ND	ND	ND	ND	ND
TERT-BUTYL METHYL ETHER	ND	ND	ND	ND	ND	ND	ND
TETRACHLOROETHENE	22 J	ND	ND	47 J	52 J	5 J	6 J
TETRAHYDROFURAN	4 J	ND	ND	ND	ND	2 J	ND
TOLUENE	13,000 J	42 J	11	ND	ND	ND	ND
TRANS-1,2-DICHLOROETHENE	ND	ND	ND	10 J	10 J	11 J	12 J
TRANS-1,3-DICHLOROPROPENE	3 J	ND	ND	ND	ND	ND	ND
TRICHLOROETHENE	12 J	7 J	ND	21 J	25 J	10 J	9 J
TRICHLOROFLUOROMETHANE	ND	ND	ND	ND	ND	ND	ND
VINYL ACETATE	ND	ND	ND	ND	ND	ND	ND
VINYL CHLORIDE	5 J	ND	ND	33 J	37 J	43	42
EPA 3C Landfill Gas (%)							
CARBON DIOXIDE	17	ND	0.09 J	19	20 J	23	23 J
CARBON MONOXIDE	ND	ND	ND	ND	ND	ND	ND
METHANE	35	ND	ND	58 J	51 J	50	54 J
NITROGEN	45	49	80	19 J	12 J	25	21
OXYGEN	2	5	19 J	4	17 J	2	2
EPA 25C Total Non-Methane Organic Carbon (ppmv)							
METHANE	360,000 J	320,000 J	26	580,000 J	510,000 J	500,000 J	550,000 J
NON-METHANE ORGANIC CARBON	28	26	ND	81	84	ND	56

APPENDIX C
QUARTERLY ANALYTICAL RESULTS (Continued)

Parcel E Nonstandard Data Gaps Investigation, Landfill Gas Characterization, Hunters Point Shipyard, San Francisco, California

Sample Location ID	SG02B	SG02C	SG02C	SG02E	SG02E	SG02G	SG02G
Sample ID	SG02SG003	SG02SG004	SG02SG005	SG02SG006	SG02SG007	SG02SG011	SG02SG012
Sample Date	04/02/2002	04/02/2002	04/02/2002	04/02/2002	04/02/2002	04/05/2002	04/05/2002
EPA TO-14 VOA (µg/m3)							
1,1,1-TRICHLOROETHANE	ND	ND	ND	ND	ND	ND	ND
1,1,2,2-TETRACHLOROETHANE	ND	ND	ND	ND	ND	ND	ND
1,1,2-TRICHLORO-1,2,2-TRIFLUOROETHANE	ND	ND	ND	ND	14 J	ND	ND
1,1,2-TRICHLOROETHANE	ND	ND	ND	ND	ND	ND	ND
1,1-DICHLOROETHANE	ND	ND	ND	9 J	ND	ND	ND
1,1-DICHLOROETHENE	ND	ND	ND	ND	ND	ND	ND
1,2,4-TRICHLOROBENZENE	11 J	ND	ND	ND	ND	ND	ND
1,2,4-TRIMETHYLBENZENE	21	ND	ND	680 J	1,700 J	ND	ND
1,2-DIBROMOETHANE	ND	ND	ND	ND	ND	ND	ND
1,2-DICHLORO-1,1,2,2-TETRAFLUOROETHANE	ND	ND	43	480 J	320 J	ND	ND
1,2-DICHLOROBENZENE	ND	ND	ND	150 J	ND	ND	ND
1,2-DICHLOROETHANE	ND	ND	ND	14 J	8 J	ND	ND
1,2-DICHLOROPROPANE	ND	ND	ND	ND	ND	ND	ND
1,3,5-TRIMETHYLBENZENE	10	ND	ND	940 J	2,300 J	ND	ND
1,3-BUTADIENE	3 J	7 J	ND	ND	ND	4	4
1,3-DICHLOROBENZENE	ND	ND	ND	11 J	ND	ND	ND
1,4-DICHLOROBENZENE	ND	ND	ND	130 J	34 J	ND	ND
1,4-DIOXANE	ND	ND	ND	ND	ND	ND	ND
2-BUTANONE	ND	ND	ND	ND	ND	ND	ND
2-HEXANONE	ND	ND	ND	ND	ND	ND	ND
4-ETHYLTOLUENE	5 J	ND	ND	150 J	450 J	ND	ND
4-METHYL-2-PENTANONE	ND	ND	ND	120 J	ND	ND	ND
ACETONE	ND	ND	63	2,100 J	470 J	ND	ND
BENZENE	ND	ND	3 J	95 J	86 J	ND	ND
BENZYL CHLORIDE	ND	ND	ND	ND	ND	ND	ND
BROMODICHLOROMETHANE	ND	ND	ND	ND	ND	ND	ND
BROMOFORM	ND	ND	ND	ND	ND	ND	ND
BROMOMETHANE	ND	ND	ND	6 J	ND	ND	ND
CARBON DISULFIDE	ND	37	3 J	17 J	15 J	ND	ND
CARBON TETRACHLORIDE	ND	ND	ND	ND	ND	ND	ND
CHLOROBENZENE	ND	ND	ND	ND	ND	ND	ND
CHLOROETHANE	ND	ND	ND	60 J	33 J	ND	ND
CHLOROFORM	ND	ND	ND	ND	ND	22	ND
CHLOROMETHANE	ND	ND	3 J	27 J	4 J	ND	ND
CIS-1,2-DICHLOROETHENE	ND	ND	ND	18 J	13 J	ND	ND
CIS-1,3-DICHLOROPROPENE	ND	ND	ND	ND	ND	ND	ND

APPENDIX C
QUARTERLY ANALYTICAL RESULTS (Continued)

Parcel E Nonstandard Data Gaps Investigation, Landfill Gas Characterization, Hunters Point Shipyard, San Francisco, California

Sample Location ID	SG02B	SG02C	SG02C	SG02E	SG02E	SG02G	SG02G
Sample ID	SG02SG003	SG02SG004	SG02SG005	SG02SG006	SG02SG007	SG02SG011	SG02SG012
Sample Date	04/02/2002	04/02/2002	04/02/2002	04/02/2002	04/02/2002	04/05/2002	04/05/2002
EPA TO-14 VOA (µg/m3)							
CYCLOHEXANE	ND	6 J	6	880 J	660 J	ND	ND
DIBROMOCHLOROMETHANE	ND	ND	ND	ND	ND	ND	ND
DICHLORODIFLUOROMETHANE	ND	ND	ND	270 J	180 J	ND	ND
ETHANOL	ND	ND	8	15 J	24 J	ND	ND
ETHYLBENZENE	7	ND	ND	410 J	760 J	ND	ND
HEPTANE	ND	10 J	ND	1,000 J	960 J	ND	ND
HEXACHLOROBUTADIENE	14 J	ND	ND	ND	ND	ND	ND
ISOPROPYL ALCOHOL	4	8 J	9	ND	ND	ND	ND
M,P-XYLENES	ND	ND	ND	2,100 J	2,800 J	ND	ND
METHYLENE CHLORIDE	ND	57	ND	ND	180 J	ND	ND
N-HEXANE	ND	58	9	1,500 J	1,200 J	ND	ND
O-XYLENE	ND	ND	ND	1,600 J	2,400 J	ND	ND
PROPYLENE	22	84	16	2,300 J	2,100 J	30	39
STYRENE	ND	ND	ND	15 J	25 J	ND	ND
TERT-BUTYL METHYL ETHER	ND	ND	ND	ND	ND	ND	ND
TETRACHLOROETHENE	ND	ND	ND	38 J	210 J	ND	ND
TETRAHYDROFURAN	ND	ND	ND	ND	ND	ND	ND
TOLUENE	ND	ND	9	250 J	350 J	ND	ND
TRANS-1,2-DICHLOROETHENE	ND	ND	ND	ND	ND	ND	ND
TRANS-1,3-DICHLOROPROPENE	ND	ND	ND	ND	ND	ND	ND
TRICHLOROETHENE	ND	ND	ND	31 J	19 J	ND	ND
TRICHLOROFLUOROMETHANE	ND	ND	ND	ND	ND	ND	ND
VINYL ACETATE	ND	ND	ND	ND	ND	ND	ND
VINYL CHLORIDE	ND	ND	ND	16 J	9 J	ND	ND
EPA 3C Landfill Gas (%)							
CARBON DIOXIDE	ND	ND	3	21	17	2	1
CARBON MONOXIDE	ND	ND	0.05 J	ND	ND	ND	ND
METHANE	ND	ND	2	52 J	45	ND	ND
NITROGEN	80	77	82	24	33	80	84
OXYGEN	20 J	22	12	2	5	16 J	12
EPA 25C Total Nonmethane Organic Carbon (ppmv)							
METHANE	230	410	16,000 J	520,000 J	550,000 J	ND	ND
NONMETHANE ORGANIC CARBON	ND	ND	ND	66	56	ND	ND

APPENDIX C
QUARTERLY ANALYTICAL RESULTS (Continued)

Parcel E Nonstandard Data Gaps Investigation, Landfill Gas Characterization, Hunters Point Shipyard, San Francisco, California

Sample Location ID	SG03	SG03	SG03A	SG03A	SG03C	SG03C
Sample ID	SG03SG005	SG03SG006	SG03SG001	SG03SG002	SG03SG003	SG03SG004
Sample Date	04/04/2002	04/04/2002	04/02/2002	04/02/2002	04/03/2002	04/03/2002
EPA TO-14 VOA (µg/m3)						
1,1,1-TRICHLOROETHANE	ND	ND	ND	ND	ND	ND
1,1,2,2-TETRACHLOROETHANE	ND	ND	ND	ND	ND	ND
1,1,2-TRICHLORO-1,2,2-TRIFLUOROETHANE	ND	ND	ND	ND	ND	ND
1,1,2-TRICHLOROETHANE	ND	ND	ND	ND	ND	ND
1,1-DICHLOROETHANE	10 J	15 J	ND	ND	ND	ND
1,1-DICHLOROETHENE	ND	ND	ND	3 J	ND	ND
1,2,4-TRICHLOROBENZENE	ND	170 J	ND	2,700 J	ND	ND
1,2,4-TRIMETHYLBENZENE	ND	190 J	440 J	3,800 J	ND	13 J
1,2-DIBROMOETHANE	ND	ND	ND	15 J	ND	ND
1,2-DICHLORO-1,1,2,2-TETRAFLUOROETHANE	520 J	510 J	510 J	660 J	260	130
1,2-DICHLOROBENZENE	12 J	54 J	160 J	510 J	ND	ND
1,2-DICHLOROETHANE	8 J	ND	ND	ND	ND	ND
1,2-DICHLOROPROPANE	ND	ND	ND	ND	ND	ND
1,3,5-TRIMETHYLBENZENE	22 J	130 J	710 J	3,500 J	ND	ND
1,3-BUTADIENE	ND	ND	ND	ND	ND	ND
1,3-DICHLOROBENZENE	6 J	40 J	ND	200 J	ND	ND
1,4-DICHLOROBENZENE	46 J	430 J	59 J	390 J	ND	ND
1,4-DIOXANE	ND	ND	ND	ND	ND	ND
2-BUTANONE	ND	ND	ND	ND	ND	ND
2-HEXANONE	ND	ND	ND	ND	ND	ND
4-ETHYLTOLUENE	ND	ND	200 J	410 J	3 J	ND
4-METHYL-2-PENTANONE	ND	ND	31 J	ND	ND	ND
ACETONE	ND	ND	670 J	ND	ND	ND
BENZENE	230 J	200 J	210 J	130 J	3 J	ND
BENZYL CHLORIDE	ND	ND	ND	ND	ND	ND
BROMODICHLOROMETHANE	ND	ND	ND	ND	ND	ND
BROMOFORM	ND	ND	ND	32 J	ND	ND
BROMOMETHANE	ND	ND	ND	ND	ND	ND
CARBON DISULFIDE	ND	74 J	12 J	3 J	ND	13 J
CARBON TETRACHLORIDE	ND	ND	ND	ND	ND	ND
CHLOROBENZENE	710 J	1,200 J	ND	ND	ND	ND
CHLOROETHANE	67 J	91 J	100 J	110 J	ND	ND
CHLOROFORM	ND	ND	ND	ND	ND	ND
CHLOROMETHANE	ND	ND	ND	ND	ND	ND
CIS-1,2-DICHLOROETHENE	11 J	17 J	28 J	13 J	ND	ND
CIS-1,3-DICHLOROPROPENE	ND	ND	ND	ND	ND	ND

APPENDIX C
QUARTERLY ANALYTICAL RESULTS (Continued)

Parcel E Nonstandard Data Gaps Investigation, Landfill Gas Characterization, Hunters Point Shipyard, San Francisco, California

Sample Location ID	SG03	SG03	SG03A	SG03A	SG03C	SG03C
Sample ID	SG03SG005	SG03SG006	SG03SG001	SG03SG002	SG03SG003	SG03SG004
Sample Date	04/04/2002	04/04/2002	04/02/2002	04/02/2002	04/03/2002	04/03/2002
EPA TO-14 VOA (µg/m3)						
CYCLOHEXANE	1,500 J	1,700 J	560 J	810 J	80	20
DIBROMOCHLOROMETHANE	ND	ND	ND	8 J	ND	ND
DICHLORODIFLUOROMETHANE	1,200 J	1,300 J	280 J	260 J	43	16 J
ETHANOL	ND	ND	ND	ND	ND	5 J
ETHYLBENZENE	11 J	17 J	110 J	130 J	ND	ND
HEPTANE	1,200 J	1,600 J	630 J	980 J	ND	9 J
HEXACHLOROBUTADIENE	ND	ND	ND	460 J	ND	ND
ISOPROPYL ALCOHOL	ND	ND	ND	ND	ND	ND
M,P-XYLENES	29 J	58 J	630 J	770 J	ND	30
METHYLENE CHLORIDE	ND	ND	66 J	ND	ND	120
N-HEXANE	1,400 J	1,600 J	1,300 J	1,300 J	ND	110
O-XYLENE	ND	ND	600 J	670 J	ND	14 J
PROPYLENE	2,500 J	2,600 J	730 J	2,600 J	ND	78
STYRENE	ND	ND	ND	97 J	ND	ND
TERT-BUTYL METHYL ETHER	ND	ND	ND	ND	ND	ND
TETRACHLOROETHENE	ND	ND	ND	16 J	ND	ND
TETRAHYDROFURAN	ND	ND	ND	ND	ND	ND
TOLUENE	ND	ND	140 J	88 J	ND	26
TRANS-1,2-DICHLOROETHENE	8 J	10 J	ND	4 J	ND	ND
TRANS-1,3-DICHLOROPROPENE	ND	ND	ND	7 J	ND	ND
TRICHLOROETHENE	8 J	11 J	16 J	12 J	ND	12 J
TRICHLOROFLUOROMETHANE	ND	ND	ND	ND	ND	ND
VINYL ACETATE	ND	ND	ND	ND	ND	ND
VINYL CHLORIDE	120 J	100 J	51 J	54 J	ND	ND
EPA 3C Landfill Gas (%)						
CARBON DIOXIDE	17	17	23 J	22 J	10	2
CARBON MONOXIDE	ND	ND	ND	ND	ND	ND
METHANE	42	40	61 J	60 J	28	3
NITROGEN	32 J	35 J	15	15 J	56	86
OXYGEN	9	8	3	3	5	13
EPA 25C Total Nonmethane Organic Carbon (ppmv)						
METHANE	440,000 J	420,000 J	610,000 J	600,000 J	280,000 J	34,000 J
NONMETHANE ORGANIC CARBON	70	66	96	97	30	ND

APPENDIX C
QUARTERLY ANALYTICAL RESULTS (Continued)

Parcel E Nonstandard Data Gaps Investigation, Landfill Gas Characterization, Hunters Point Shipyard, San Francisco, California

Sample Location ID	SG03D	SG03D	SG04	SG04	SG04A	SG04A	SG04A
Sample ID	SG03SG007	SG03SG008	SG04SG001	SG04SG002	SG04SG003	SG04SG004	SG04SG005
Sample Date	04/05/2002	04/05/2002	03/27/2002	03/27/2002	04/03/2002	04/03/2002	04/03/2002
EPA TO-14 VOA (µg/m3)							
1,1,1-TRICHLOROETHANE	ND	ND	ND	ND	ND	ND	ND
1,1,2,2-TETRACHLOROETHANE	ND	ND	ND	ND	ND	ND	ND
1,1,2-TRICHLORO-1,2,2-TRIFLUOROETHANE	ND	ND	ND	ND	ND	ND	ND
1,1,2-TRICHLOROETHANE	ND	ND	ND	ND	ND	ND	ND
1,1-DICHLOROETHANE	ND	ND	4 J	20	52	8 J	50
1,1-DICHLOROETHENE	ND	ND	3 J	ND	ND	ND	ND
1,2,4-TRICHLOROBENZENE	ND	ND	83	ND	6 J	ND	ND
1,2,4-TRIMETHYLBENZENE	ND	9	ND	ND	ND	ND	41
1,2-DIBROMOETHANE	ND	ND	ND	ND	ND	ND	ND
1,2-DICHLORO-1,1,2,2-TETRAFLUOROETHANE	ND	ND	330	550	640	120	620
1,2-DICHLOROBENZENE	ND	6 J	79	21	ND	ND	ND
1,2-DICHLOROETHANE	ND	ND	5 J	5 J	4 J	ND	ND
1,2-DICHLOROPROPANE	ND	ND	ND	3 J	ND	ND	ND
1,3,5-TRIMETHYLBENZENE	ND	ND	ND	12 J	ND	ND	31
1,3-BUTADIENE	ND	ND	ND	3 J	ND	ND	ND
1,3-DICHLOROBENZENE	ND	5 J	79	10 J	ND	ND	ND
1,4-DICHLOROBENZENE	ND	5 J	680	100	ND	ND	ND
1,4-DIOXANE	ND	ND	ND	ND	ND	ND	ND
2-BUTANONE	ND	ND	ND	ND	ND	ND	ND
2-HEXANONE	ND	ND	ND	ND	ND	ND	ND
4-ETHYLTOLUENE	ND	ND	ND	ND	ND	ND	10 J
4-METHYL-2-PENTANONE	ND	ND	220	ND	ND	ND	ND
ACETONE	ND	37	260	390	ND	56	670
BENZENE	ND	ND	440	200	85	13	55
BENZYL CHLORIDE	ND	ND	ND	ND	ND	ND	ND
BROMODICHLOROMETHANE	ND	ND	ND	ND	ND	ND	ND
BROMOFORM	ND	ND	ND	ND	ND	ND	ND
BROMOMETHANE	ND	ND	ND	ND	ND	ND	ND
CARBON DISULFIDE	ND	ND	3 J	450	5 J	36	18
CARBON TETRACHLORIDE	ND	ND	ND	ND	ND	ND	ND
CHLOROBENZENE	ND	ND	740	280	ND	ND	ND
CHLOROETHANE	ND	ND	22	62	440	72	490
CHLOROFORM	ND	ND	ND	ND	ND	ND	ND
CHLOROMETHANE	ND	3 J	ND	2 J	14 J	ND	4 J
CIS-1,2-DICHLOROETHENE	ND	ND	20	44	42	6 J	40
CIS-1,3-DICHLOROPROPENE	ND	ND	ND	ND	ND	ND	ND

APPENDIX C
QUARTERLY ANALYTICAL RESULTS (Continued)

Parcel E Nonstandard Data Gaps Investigation, Landfill Gas Characterization, Hunters Point Shipyard, San Francisco, California

Sample Location ID	SG03D	SG03D	SG04	SG04	SG04A	SG04A	SG04A
Sample ID	SG03SG007	SG03SG008	SG04SG001	SG04SG002	SG04SG003	SG04SG004	SG04SG005
Sample Date	04/05/2002	04/05/2002	03/27/2002	03/27/2002	04/03/2002	04/03/2002	04/03/2002
EPA TO-14 VOA (µg/m3)							
CYCLOHEXANE	ND	ND	980	990	890	140	750
DIBROMOCHLOROMETHANE	ND	ND	ND	ND	ND	ND	ND
DICHLORODIFLUOROMETHANE	ND	ND	140	55	57	13 J	76
ETHANOL	ND	310	ND	ND	ND	42	ND
ETHYLBENZENE	ND	ND	36	20	13 J	ND	13 J
HEPTANE	ND	ND	1,800	1,100	210	32	170
HEXACHLOROBUTADIENE	ND	ND	ND	33 J	ND	ND	ND
ISOPROPYL ALCOHOL	ND	49	ND	ND	ND	ND	ND
M,P-XYLENES	ND	11	48	53	ND	13 J	66
METHYLENE CHLORIDE	ND	ND	ND	ND	ND	340	ND
N-HEXANE	ND	ND	1,400	950	1,100	340	730
O-XYLENE	ND	5 J	31	38	27 J	ND	44
PROPYLENE	13	9	ND	780	1,100	78	260
STYRENE	ND	ND	ND	3 J	ND	ND	ND
TERT-BUTYL METHYL ETHER	ND	ND	ND	ND	ND	ND	ND
TETRACHLOROETHENE	ND	ND	19	34	20 J	ND	14 J
TETRAHYDROFURAN	ND	ND	ND	10 J	ND	ND	ND
TOLUENE	ND	3 J	ND	ND	88	170	16
TRANS-1,2-DICHLOROETHENE	ND	ND	3 J	11 J	8 J	ND	8 J
TRANS-1,3-DICHLOROPROPENE	ND	ND	ND	ND	ND	ND	ND
TRICHLOROETHENE	ND	ND	13	40	14 J	ND	11 J
TRICHLOROFLUOROMETHANE	ND	ND	ND	16 J	ND	ND	ND
VINYL ACETATE	ND	ND	ND	3 J	ND	ND	ND
VINYL CHLORIDE	ND	ND	18	47	35	5 J	28
EPA 3C Landfill Gas (%)							
CARBON DIOXIDE	ND	ND	26 J	13	18	4	18
CARBON MONOXIDE	ND	ND	ND	ND	ND	ND	ND
METHANE	ND	ND	62 J	32	50 J	12	47
NITROGEN	82	81	10	48	26 J	67	29
OXYGEN	20 J	19 J	1	7	7	17 J	4
EPA 25C Total Nonmethane Organic Carbon (ppmv)							
METHANE	ND	ND	ND	320,000 J	500,000 J	130,000 J	470,000 J
NONMETHANE ORGANIC CARBON	ND	ND	92	86	170	44	180

APPENDIX C
QUARTERLY ANALYTICAL RESULTS (Continued)
Parcel E Nonstandard Data Gaps Investigation, Landfill Gas Characterization, Hunters Point Shipyard, San Francisco, California

Sample Location ID	SG05A	SG05B	SG05B	SG05C	SG05C	SG06	SG06A
Sample ID	SG05SG001	SG05SG002	SG05SG003	SG05SG004	SG05SG005	SG06SG001	SG06SG002
Sample Date	03/29/2002	03/29/2002	03/29/2002	03/29/2002	03/29/2002	03/26/2002	03/27/2002
EPA TO-14 VOA (µg/m3)							
1,1,1-TRICHLOROETHANE	ND	ND	ND	ND	ND	ND	ND
1,1,2,2-TETRACHLOROETHANE	ND	6 J	ND	ND	ND	ND	ND
1,1,2-TRICHLORO-1,2,2-TRIFLUOROETHANE	ND	ND	ND	ND	ND	ND	ND
1,1,2-TRICHLOROETHANE	ND	ND	ND	ND	ND	ND	ND
1,1-DICHLOROETHANE	130 J	120	100 J	ND	ND	ND	ND
1,1-DICHLOROETHENE	ND	ND	ND	ND	ND	ND	ND
1,2,4-TRICHLOROBENZENE	16 J	ND	12 J	ND	ND	ND	ND
1,2,4-TRIMETHYLBENZENE	20 J	ND	ND	ND	ND	ND	6 J
1,2-DIBROMOETHANE	ND	ND	ND	ND	ND	ND	ND
1,2-DICHLORO-1,1,2,2-TETRAFLUOROETHANE	510 J	400	460 J	660	280	16	880
1,2-DICHLOROBENZENE	10 J	ND	ND	ND	ND	ND	ND
1,2-DICHLOROETHANE	ND	ND	ND	ND	ND	ND	ND
1,2-DICHLOROPROPANE	ND	ND	ND	ND	ND	ND	ND
1,3,5-TRIMETHYLBENZENE	11 J	ND	ND	ND	ND	ND	ND
1,3-BUTADIENE	5 J	2 J	11 J	3 J	4 J	3	ND
1,3-DICHLOROBENZENE	8 J	ND	ND	ND	ND	ND	ND
1,4-DICHLOROBENZENE	17 J	ND	ND	ND	ND	ND	5 J
1,4-DIOXANE	ND	ND	ND	ND	ND	ND	ND
2-BUTANONE	ND	ND	ND	ND	ND	ND	ND
2-HEXANONE	ND	ND	ND	ND	ND	ND	ND
4-ETHYLTOLUENE	8 J	ND	ND	ND	ND	ND	ND
4-METHYL-2-PENTANONE	ND	ND	ND	ND	ND	4	ND
ACETONE	ND	550	ND	ND	ND	ND	19
BENZENE	49 J	12	3 J	13	100	13	7
BENZYL CHLORIDE	ND	ND	ND	ND	ND	ND	ND
BROMODICHLOROMETHANE	ND	ND	ND	ND	ND	ND	ND
BROMOFORM	ND	ND	ND	ND	ND	ND	ND
BROMOMETHANE	ND	ND	ND	ND	ND	ND	ND
CARBON DISULFIDE	16 J	ND	ND	ND	13	3	ND
CARBON TETRACHLORIDE	ND	ND	ND	ND	ND	ND	ND
CHLOROBENZENE	ND	ND	ND	5 J	ND	ND	ND
CHLOROETHANE	610 J	240	190 J	10	ND	ND	ND
CHLOROFORM	ND	ND	ND	ND	ND	ND	ND
CHLOROMETHANE	ND	64	ND	ND	ND	2	ND
CIS-1,2-DICHLOROETHENE	77 J	ND	14 J	ND	ND	ND	ND
CIS-1,3-DICHLOROPROPENE	ND	ND	ND	ND	ND	ND	ND

APPENDIX C
QUARTERLY ANALYTICAL RESULTS (Continued)

Parcel E Nonstandard Data Gaps Investigation, Landfill Gas Characterization, Hunters Point Shipyard, San Francisco, California

Sample Location ID	SG05A	SG05B	SG05B	SG05C	SG05C	SG06	SG06A
Sample ID	SG05SG001	SG05SG002	SG05SG003	SG05SG004	SG05SG005	SG06SG001	SG06SG002
Sample Date	03/29/2002	03/29/2002	03/29/2002	03/29/2002	03/29/2002	03/26/2002	03/27/2002
EPA TO-14 VOA (µg/m3)							
CYCLOHEXANE	690 J	350	350 J	94	650	52	19
DIBROMOCHLOROMETHANE	ND	ND	ND	ND	ND	ND	ND
DICHLORODIFLUOROMETHANE	260 J	59	ND	ND	ND	12	36
ETHANOL	ND	110	ND	ND	1,200	ND	ND
ETHYLBENZENE	15 J	3 J	ND	ND	17 J	13	ND
HEPTANE	74 J	33	66 J	10	150	62	ND
HEXACHLOROBUTADIENE	35 J	ND	ND	ND	ND	ND	12 J
ISOPROPYL ALCOHOL	ND	ND	ND	ND	180	11	ND
M,P-XYLENES	43 J	9 J	7 J	8 J	36 J	35	6
METHYLENE CHLORIDE	ND	ND	ND	ND	ND	ND	ND
N-HEXANE	940 J	140	350 J	ND	420	ND	10
O-XYLENE	18 J	ND	ND	ND	15 J	18	3 J
PROPYLENE	360 J	ND	ND	ND	ND	53	ND
STYRENE	11 J	ND	ND	ND	ND	ND	ND
TERT-BUTYL METHYL ETHER	ND	ND	ND	ND	ND	29	ND
TETRACHLOROETHENE	35 J	ND	ND	ND	ND	13	6 J
TETRAHYDROFURAN	ND	ND	ND	ND	ND	ND	ND
TOLUENE	160 J	8	ND	7 J	160	65	6
TRANS-1,2-DICHLOROETHENE	16 J	ND	3 J	ND	ND	ND	ND
TRANS-1,3-DICHLOROPROPENE	ND	ND	ND	ND	ND	ND	ND
TRICHLOROETHENE	53 J	ND	ND	ND	8 J	ND	ND
TRICHLOROFLUOROMETHANE	ND	ND	ND	ND	ND	6	ND
VINYL ACETATE	ND	ND	ND	ND	ND	ND	ND
VINYL CHLORIDE	59 J	3 J	ND	ND	ND	ND	ND
EPA 3C Landfill Gas (%)							
CARBON DIOXIDE	8	16	19	14	4	0.3	10
CARBON MONOXIDE	ND	ND	ND	ND	ND	ND	ND
METHANE	31	51	55 J	30	10	1	47
NITROGEN	47	28	26	48	68	80	41
OXYGEN	13	4	1	8	17	20 J	2
EPA 25C Total Nonmethane Organic Carbon (ppmv)							
METHANE	360,000 J	510,000 J	560,000 J	300,000 J	100,000 J	14,000 J	470,000 J
NONMETHANE ORGANIC CARBON	120	190	210	140	56	ND	120

APPENDIX C
QUARTERLY ANALYTICAL RESULTS (Continued)

Parcel E Nonstandard Data Gaps Investigation, Landfill Gas Characterization, Hunters Point Shipyard, San Francisco, California

Sample Location ID	SG06B	SG06C	SG07	SG07A	SG07A	SG08
Sample ID	SG06SG003	SG06SG004	SG07SG001	SG07SG002	SG07SG003	SG08SG001
Sample Date	03/27/2002	03/28/2002	03/26/2002	03/28/2002	03/28/2002	03/26/2002
EPA TO-14 VOA (µg/m3)						
1,1,1-TRICHLOROETHANE	ND	ND	ND	ND	ND	39
1,1,2,2-TETRACHLOROETHANE	ND	ND	ND	ND	ND	ND
1,1,2-TRICHLORO-1,2,2-TRIFLUOROETHANE	ND	ND	ND	ND	ND	16 J
1,1,2-TRICHLOROETHANE	ND	ND	ND	ND	ND	ND
1,1-DICHLOROETHANE	ND	ND	ND	ND	ND	ND
1,1-DICHLOROETHENE	ND	ND	ND	ND	ND	5 J
1,2,4-TRICHLOROBENZENE	ND	ND	ND	ND	ND	15 J
1,2,4-TRIMETHYLBENZENE	ND	10	ND	6 J	20 J	2,300
1,2-DIBROMOETHANE	ND	ND	ND	ND	ND	ND
1,2-DICHLORO-1,1,2,2-TETRAFLUOROETHANE	220	12	ND	98	ND	970
1,2-DICHLOROBENZENE	ND	ND	ND	5 J	ND	16 J
1,2-DICHLOROETHANE	ND	ND	ND	ND	ND	25
1,2-DICHLOROPROPANE	ND	ND	ND	ND	ND	ND
1,3,5-TRIMETHYLBENZENE	ND	ND	ND	ND	10 J	1,100
1,3-BUTADIENE	ND	ND	ND	3 J	3 J	7 J
1,3-DICHLOROBENZENE	ND	ND	ND	ND	ND	ND
1,4-DICHLOROBENZENE	ND	8 J	ND	5 J	ND	ND
1,4-DIOXANE	ND	ND	ND	ND	ND	ND
2-BUTANONE	ND	ND	ND	ND	ND	ND
2-HEXANONE	ND	ND	ND	ND	ND	ND
4-ETHYLTOLUENE	ND	ND	ND	ND	5 J	430
4-METHYL-2-PENTANONE	ND	ND	ND	ND	ND	180
ACETONE	ND	ND	ND	ND	ND	2,300
BENZENE	ND	ND	8	ND	8	55
BENZYL CHLORIDE	ND	ND	ND	ND	ND	ND
BROMODICHLOROMETHANE	ND	ND	ND	ND	ND	ND
BROMOFORM	ND	ND	ND	ND	ND	ND
BROMOMETHANE	ND	ND	ND	ND	ND	ND
CARBON DISULFIDE	ND	3 J	ND	28	ND	4 J
CARBON TETRACHLORIDE	ND	ND	ND	ND	ND	ND
CHLOROBENZENE	ND	ND	ND	ND	ND	ND
CHLOROETHANE	ND	ND	ND	ND	ND	1,100
CHLOROFORM	ND	ND	ND	ND	ND	ND
CHLOROMETHANE	ND	ND	ND	ND	ND	ND
CIS-1,2-DICHLOROETHENE	ND	ND	6	ND	ND	26
CIS-1,3-DICHLOROPROPENE	ND	ND	ND	ND	ND	ND

APPENDIX C
QUARTERLY ANALYTICAL RESULTS (Continued)

Parcel E Nonstandard Data Gaps Investigation, Landfill Gas Characterization, Hunters Point Shipyard, San Francisco, California

Sample Location ID	SG06B	SG06C	SG07	SG07A	SG07A	SG08
Sample ID	SG06SG003	SG06SG004	SG07SG001	SG07SG002	SG07SG003	SG08SG001
Sample Date	03/27/2002	03/28/2002	03/26/2002	03/28/2002	03/28/2002	03/26/2002
EPA TO-14 VOA (µg/m3)						
CYCLOHEXANE	7	11	450	8	12	1,300
DIBROMOCHLOROMETHANE	ND	ND	ND	ND	ND	ND
DICHLORODIFLUOROMETHANE	4 J	7	9	ND	ND	20 J
ETHANOL	2 J	2 J	ND	ND	ND	ND
ETHYLBENZENE	ND	ND	ND	ND	8 J	23
HEPTANE	3 J	5 J	120	930	27	350
HEXACHLOROBUTADIENE	ND	ND	ND	23 J	ND	ND
ISOPROPYL ALCOHOL	ND	ND	ND	ND	ND	3 J
M,P-XYLENES	ND	3 J	9	4 J	29 J	150
METHYLENE CHLORIDE	ND	ND	ND	ND	ND	ND
N-HEXANE	160	18	530	870	ND	2,600
O-XYLENE	ND	ND	ND	ND	18 J	160
PROPYLENE	27	29	21	88	44	530
STYRENE	ND	ND	ND	ND	ND	ND
TERT-BUTYL METHYL ETHER	ND	ND	ND	ND	ND	ND
TETRACHLOROETHENE	ND	ND	ND	ND	ND	60
TETRAHYDROFURAN	ND	ND	ND	ND	ND	6 J
TOLUENE	ND	5 J	ND	3 J	12	ND
TRANS-1,2-DICHLOROETHENE	ND	ND	ND	ND	ND	6 J
TRANS-1,3-DICHLOROPROPENE	ND	ND	ND	ND	ND	ND
TRICHLOROETHENE	ND	ND	ND	ND	ND	13 J
TRICHLOROFLUOROMETHANE	ND	ND	ND	ND	ND	ND
VINYL ACETATE	ND	ND	ND	ND	ND	ND
VINYL CHLORIDE	ND	ND	ND	ND	ND	26
EPA 3C Landfill Gas (%)						
CARBON DIOXIDE	5	ND	20	6	ND	3
CARBON MONOXIDE	ND	ND	ND	ND	ND	ND
METHANE	6	ND	72 J	4	0.2 J	65
NITROGEN	77	90	5	87	79	26
OXYGEN	9	5	0.5	4	20	5
EPA 25C Total Nonmethane Organic Carbon (ppmv)						
METHANE	65,000 J	550	720,000 J	36,000 J	410	650,000 J
NONMETHANE ORGANIC CARBON	11	0.3 J	150	ND	ND	190

APPENDIX C
QUARTERLY ANALYTICAL RESULTS (Continued)

Parcel E Nonstandard Data Gaps Investigation, Landfill Gas Characterization, Hunters Point Shipyard, San Francisco, California

Sample Location ID	SG08A	SG08A	SG11	SG12	SG15	SG21A	SG21A
Sample ID	SG08SG002	SG08SG003	SG11SG001	SG12SG001	SG15SG001	SG21SG001	SG21SG002
Sample Date	03/28/2002	03/28/2002	03/25/2002	03/25/2002	03/26/2002	04/04/2002	04/04/2002
EPA TO-14 VOA (µg/m3)							
1,1,1-TRICHLOROETHANE	ND	ND	28	24,000	ND	ND	ND
1,1,2,2-TETRACHLOROETHANE	ND	ND	ND	8 J	ND	ND	ND
1,1,2-TRICHLORO-1,2,2-TRIFLUOROETHANE	ND	ND	ND	520	83	ND	ND
1,1,2-TRICHLOROETHANE	ND	ND	ND	6 J	ND	ND	ND
1,1-DICHLOROETHANE	ND	ND	4	840	ND	ND	ND
1,1-DICHLOROETHENE	ND	ND	4	3,500	ND	ND	ND
1,2,4-TRICHLOROBENZENE	19	ND	ND	20 J	ND	48	ND
1,2,4-TRIMETHYLBENZENE	190	ND	ND	ND	ND	17	35
1,2-DIBROMOETHANE	ND	ND	ND	8 J	ND	ND	ND
1,2-DICHLORO-1,1,2,2-TETRAFLUOROETHANE	410	160	ND	13 J	ND	ND	ND
1,2-DICHLOROBENZENE	ND	ND	ND	10 J	ND	ND	ND
1,2-DICHLOROETHANE	ND	ND	ND	4 J	ND	ND	ND
1,2-DICHLOROPROPANE	ND	ND	ND	4 J	ND	ND	ND
1,3,5-TRIMETHYLBENZENE	40	ND	ND	5 J	450	4 J	10 J
1,3-BUTADIENE	ND	ND	3	2 J	ND	ND	ND
1,3-DICHLOROBENZENE	ND	ND	ND	7 J	ND	ND	ND
1,4-DICHLOROBENZENE	ND	ND	ND	9 J	ND	17	ND
1,4-DIOXANE	ND	ND	ND	ND	ND	ND	ND
2-BUTANONE	ND	ND	ND	ND	ND	ND	ND
2-HEXANONE	ND	ND	ND	11 J	ND	ND	ND
4-ETHYLTOLUENE	18	ND	ND	4 J	ND	3 J	ND
4-METHYL-2-PENTANONE	ND	ND	ND	8 J	ND	ND	ND
ACETONE	94	40	ND	ND	130	ND	ND
BENZENE	72	6	10	21	6	ND	10 J
BENZYL CHLORIDE	ND	ND	ND	5 J	ND	ND	ND
BROMODICHLOROMETHANE	ND	ND	ND	67	ND	ND	ND
BROMOFORM	ND	ND	ND	14 J	ND	ND	ND
BROMOMETHANE	ND	ND	ND	ND	ND	ND	ND
CARBON DISULFIDE	9	4 J	4	14	21	ND	9 J
CARBON TETRACHLORIDE	ND	ND	ND	44	ND	ND	ND
CHLOROBENZENE	ND	ND	ND	6 J	ND	ND	ND
CHLOROETHANE	ND	ND	ND	4 J	ND	ND	ND
CHLOROFORM	ND	ND	ND	110	ND	ND	ND
CHLOROMETHANE	ND	ND	ND	ND	ND	ND	ND
CIS-1,2-DICHLOROETHENE	ND	ND	40	84	4	ND	ND
CIS-1,3-DICHLOROPROPENE	ND	ND	ND	4 J	ND	ND	ND

APPENDIX C
QUARTERLY ANALYTICAL RESULTS (Continued)

Parcel E Nonstandard Data Gaps Investigation, Landfill Gas Characterization, Hunters Point Shipyard, San Francisco, California

Sample Location ID	SG08A	SG08A	SG11	SG12	SG15	SG21A	SG21A
Sample ID	SG08SG002	SG08SG003	SG11SG001	SG12SG001	SG15SG001	SG21SG001	SG21SG002
Sample Date	03/28/2002	03/28/2002	03/25/2002	03/25/2002	03/26/2002	04/04/2002	04/04/2002
EPA TO-14 VOA (µg/m3)							
CYCLOHEXANE	300	52	27	160	100	ND	ND
DIBROMOCHLOROMETHANE	ND	ND	ND	10 J	ND	ND	ND
DICHLORODIFLUOROMETHANE	250	11	ND	ND	6	ND	ND
ETHANOL	7	ND	ND	53	25	ND	ND
ETHYLBENZENE	6 J	ND	ND	5 J	9	ND	10 J
HEPTANE	460	12	21	8 J	22	120	1,300
HEXACHLOROBUTADIENE	58	ND	ND	22 J	12	ND	ND
ISOPROPYL ALCOHOL	ND	ND	ND	24	ND	ND	ND
M,P-XYLENES	33	ND	ND	11 J	44	8	32
METHYLENE CHLORIDE	54	ND	ND	ND	180	ND	ND
N-HEXANE	100	36	64	68	150	160	1,700
O-XYLENE	12	ND	ND	5 J	66	4 J	14 J
PROPYLENE	76	35	54	7	65	150	1,700
STYRENE	ND	ND	ND	4 J	ND	ND	ND
TERT-BUTYL METHYL ETHER	ND	ND	ND	ND	ND	ND	ND
TETRACHLOROETHENE	ND	ND	43	23,000	65	ND	ND
TETRAHYDROFURAN	ND	ND	ND	3 J	ND	ND	ND
TOLUENE	55	4 J	ND	26	54	ND	56
TRANS-1,2-DICHLOROETHENE	ND	ND	6	17	ND	ND	ND
TRANS-1,3-DICHLOROPROPENE	ND	ND	ND	4 J	ND	ND	ND
TRICHLOROETHENE	ND	ND	17	6,400	27	ND	ND
TRICHLOROFLUOROMETHANE	ND	ND	6	4,500	ND	ND	ND
VINYL ACETATE	ND	ND	ND	ND	ND	ND	ND
VINYL CHLORIDE	ND	ND	11	2 J	12	ND	ND
EPA 3C Landfill Gas (%)							
CARBON DIOXIDE	5	4	5	2	ND	ND	ND
CARBON MONOXIDE	ND	ND	ND	ND	ND	ND	ND
METHANE	23	6	ND	ND	ND	0.2 J	0.4
NITROGEN	64	83	90	86	79	78 J	77 J
OXYGEN	11	7	3	11	21	22	22
EPA 25C Total Nonmethane Organic Carbon (ppmv)							
METHANE	230,000 J	82,000 J	210	ND	5,000 J	510	4,100 J
NONMETHANE ORGANIC CARBON	50	5	ND	ND	ND	ND	ND

APPENDIX C
QUARTERLY ANALYTICAL RESULTS (Continued)

Parcel E Nonstandard Data Gaps Investigation, Landfill Gas Characterization, Hunters Point Shipyard, San Francisco, California

Sample Location ID	SG24	SG24	SG25	SG25	SG25
Sample ID	SG24SG001	SG24SG002	SG25SG001	SG25SG002	SG25SG003
Sample Date	03/27/2002	03/27/2002	03/27/2002	03/27/2002	03/27/2002
EPA TO-14 VOA (µg/m3)					
1,1,1-TRICHLOROETHANE	ND	ND	ND	ND	5 J
1,1,2,2-TETRACHLOROETHANE	ND	ND	ND	ND	ND
1,1,2-TRICHLORO-1,2,2-TRIFLUOROETHANE	ND	ND	10 J	10 J	10 J
1,1,2-TRICHLOROETHANE	ND	ND	5 J	5 J	ND
1,1-DICHLOROETHANE	ND	ND	18 J	17 J	28 J
1,1-DICHLOROETHENE	ND	ND	ND	ND	ND
1,2,4-TRICHLOROBENZENE	ND	ND	ND	18 J	35 J
1,2,4-TRIMETHYLBENZENE	260	13 J	23 J	23 J	23 J
1,2-DIBROMOETHANE	ND	ND	ND	ND	ND
1,2-DICHLORO-1,1,2,2-TETRAFLUOROETHANE	ND	ND	410	370	400
1,2-DICHLOROBENZENE	ND	ND	23 J	12 J	13 J
1,2-DICHLOROETHANE	ND	ND	12 J	10 J	12 J
1,2-DICHLOROPROPANE	ND	ND	ND	ND	ND
1,3,5-TRIMETHYLBENZENE	60	ND	20 J	14 J	17 J
1,3-BUTADIENE	ND	ND	ND	ND	ND
1,3-DICHLOROBENZENE	ND	ND	20 J	11 J	10 J
1,4-DICHLOROBENZENE	ND	ND	1,100	1,100	ND
1,4-DIOXANE	ND	ND	ND	ND	ND
2-BUTANONE	ND	ND	ND	ND	ND
2-HEXANONE	ND	8 J	ND	ND	ND
4-ETHYLTOLUENE	49	ND	11 J	8 J	7 J
4-METHYL-2-PENTANONE	ND	ND	ND	750	ND
ACETONE	ND	ND	ND	ND	ND
BENZENE	ND	ND	280	280	360
BENZYL CHLORIDE	ND	ND	ND	ND	ND
BROMODICHLOROMETHANE	17 J	ND	ND	ND	ND
BROMOFORM	ND	ND	ND	ND	ND
BROMOMETHANE	ND	ND	ND	ND	ND
CARBON DISULFIDE	ND	8 J	3 J	3 J	3 J
CARBON TETRACHLORIDE	13 J	ND	ND	ND	ND
CHLOROBENZENE	ND	ND	1,100	760	ND
CHLOROETHANE	ND	ND	76	70	88
CHLOROFORM	ND	ND	ND	ND	ND
CHLOROMETHANE	ND	ND	6 J	5 J	6 J
CIS-1,2-DICHLOROETHENE	ND	ND	18 J	18 J	28 J
CIS-1,3-DICHLOROPROPENE	ND	ND	ND	ND	ND

APPENDIX C
QUARTERLY ANALYTICAL RESULTS (Continued)

Parcel E Nonstandard Data Gaps Investigation, Landfill Gas Characterization, Hunters Point Shipyard, San Francisco, California

Sample Location ID	SG24	SG24	SG25	SG25	SG25
Sample ID	SG24SG001	SG24SG002	SG25SG001	SG25SG002	SG25SG003
Sample Date	03/27/2002	03/27/2002	03/27/2002	03/27/2002	03/27/2002
EPA TO-14 VOA (µg/m3)					
CYCLOHEXANE	15	ND	2,100	2,100	2,100
DIBROMOCHLOROMETHANE	ND	ND	ND	ND	ND
DICHLORODIFLUOROMETHANE	ND	ND	250	220	250
ETHANOL	ND	ND	15	3 J	ND
ETHYLBENZENE	ND	ND	46	37	22 J
HEPTANE	31	ND	1,600	1,500	1,300
HEXACHLOROBUTADIENE	ND	ND	ND	13 J	14 J
ISOPROPYL ALCOHOL	ND	ND	ND	ND	ND
M,P-XYLENES	10 J	ND	33	24 J	16 J
METHYLENE CHLORIDE	ND	ND	ND	ND	ND
N-HEXANE	ND	ND	3,100	2,900	3,400
O-XYLENE	12 J	ND	14 J	8 J	10 J
PROPYLENE	130	ND	2,200	1,900	1,200
STYRENE	ND	ND	4 J	ND	ND
TERT-BUTYL METHYL ETHER	ND	ND	ND	ND	ND
TETRACHLOROETHENE	ND	ND	26 J	ND	9 J
TETRAHYDROFURAN	ND	ND	8 J	7 J	3 J
TOLUENE	ND	ND	14 J	16 J	8 J
TRANS-1,2-DICHLOROETHENE	ND	ND	7 J	6 J	10 J
TRANS-1,3-DICHLOROPROPENE	ND	ND	ND	ND	ND
TRICHLOROETHENE	18 J	ND	52	11 J	15 J
TRICHLOROFLUOROMETHANE	ND	ND	ND	ND	ND
VINYL ACETATE	ND	ND	ND	ND	ND
VINYL CHLORIDE	ND	ND	26	24	26
EPA 3C Landfill Gas (%)					
CARBON DIOXIDE	ND	ND	23 J	23 J	24
CARBON MONOXIDE	ND	ND	ND	ND	ND
METHANE	ND	ND	64 J	63 J	66 J
NITROGEN	77	80	10	11	9
OXYGEN	21	19 J	2	2	1
EPA 25C Total Nonmethane Organic Carbon (ppmv)					
METHANE	ND	ND	640,000 J	630,000 J	660,000 J
NONMETHANE ORGANIC CARBON	ND	ND	48	52	52

APPENDIX C
QUARTERLY ANALYTICAL RESULTS (Continued)

Parcel E Nonstandard Data Gaps Investigation, Landfill Gas Characterization, Hunters Point Shipyard, San Francisco, California

Sample Location ID	SG25A	SG25A	SG25A	SG25B	SG25C	SG25D	SG25D
Sample ID	SG25SG004	SG25SG005	SG25SG006	SG25SG007	SG25SG008	SG25SG009	SG25SG010
Sample Date	04/01/2002	04/01/2002	04/01/2002	04/01/2002	04/03/2002	04/05/2002	04/05/2002
EPA TO-14 VOA (µg/m3)							
1,1,1-TRICHLOROETHANE	5 J	4 J	4 J	5 J	ND	ND	ND
1,1,2,2-TETRACHLOROETHANE	ND	ND	ND	ND	ND	ND	ND
1,1,2-TRICHLORO-1,2,2-TRIFLUOROETHANE	ND	6 J	5 J	8 J	ND	ND	ND
1,1,2-TRICHLOROETHANE	ND	5 J	4 J	ND	ND	ND	ND
1,1-DICHLOROETHANE	ND	21 J	23 J	5 J	ND	ND	ND
1,1-DICHLOROETHENE	ND	ND	ND	ND	ND	ND	ND
1,2,4-TRICHLOROBENZENE	ND	14 J	17 J	12 J	ND	ND	ND
1,2,4-TRIMETHYLBENZENE	ND	12 J	12 J	5 J	ND	ND	ND
1,2-DIBROMOETHANE	ND	ND	ND	ND	ND	ND	ND
1,2-DICHLORO-1,1,2,2-TETRAFLUOROETHANE	ND	280	300	220	ND	ND	12 J
1,2-DICHLOROBENZENE	ND	7 J	7 J	7 J	ND	ND	ND
1,2-DICHLOROETHANE	ND	8 J	9 J	ND	ND	ND	ND
1,2-DICHLOROPROPANE	ND	4 J	3 J	ND	ND	ND	ND
1,3,5-TRIMETHYLBENZENE	ND	19 J	9 J	ND	ND	ND	ND
1,3-BUTADIENE	ND	ND	ND	2 J	ND	7	18
1,3-DICHLOROBENZENE	ND	7 J	7 J	7 J	ND	ND	ND
1,4-DICHLOROBENZENE	8 J	9 J	8 J	7 J	ND	ND	ND
1,4-DIOXANE	ND	ND	ND	ND	ND	ND	ND
2-BUTANONE	ND	ND	ND	ND	ND	ND	ND
2-HEXANONE	45	ND	ND	ND	ND	ND	ND
4-ETHYLTOLUENE	ND	5 J	ND	ND	ND	4 J	8 J
4-METHYL-2-PENTANONE	ND	ND	ND	ND	ND	ND	ND
ACETONE	ND	ND	ND	ND	ND	ND	ND
BENZENE	ND	18 J	18 J	9 J	ND	5	12
BENZYL CHLORIDE	ND	ND	ND	ND	ND	ND	ND
BROMODICHLOROMETHANE	ND	ND	ND	ND	ND	ND	ND
BROMOFORM	ND	ND	ND	ND	ND	ND	ND
BROMOMETHANE	ND	3 J	ND	4 J	ND	ND	ND
CARBON DISULFIDE	26	3 J	ND	3 J	ND	ND	ND
CARBON TETRACHLORIDE	ND	ND	ND	ND	ND	ND	ND
CHLOROBENZENE	ND	ND	ND	ND	ND	ND	ND
CHLOROETHANE	ND	55	58	5 J	ND	ND	ND
CHLOROFORM	5 J	ND	ND	16 J	13	ND	ND
CHLOROMETHANE	ND	ND	ND	ND	ND	ND	ND
CIS-1,2-DICHLOROETHENE	ND	23 J	25 J	5 J	ND	ND	ND
CIS-1,3-DICHLOROPROPENE	ND	ND	ND	ND	ND	ND	ND

APPENDIX C
QUARTERLY ANALYTICAL RESULTS (Continued)

Parcel E Nonstandard Data Gaps Investigation, Landfill Gas Characterization, Hunters Point Shipyard, San Francisco, California

Sample Location ID	SG25A	SG25A	SG25A	SG25B	SG25C	SG25D	SG25D
Sample ID	SG25SG004	SG25SG005	SG25SG006	SG25SG007	SG25SG008	SG25SG009	SG25SG010
Sample Date	04/01/2002	04/01/2002	04/01/2002	04/01/2002	04/03/2002	04/05/2002	04/05/2002
EPA TO-14 VOA (µg/m3)							
CYCLOHEXANE	ND	1,600	1,600	180	3 J	ND	11
DIBROMOCHLOROMETHANE	ND	ND	ND	ND	ND	ND	ND
DICHLORODIFLUOROMETHANE	ND	410	430	31 J	4 J	ND	ND
ETHANOL	ND	ND	2 J	19	ND	5,700	12,000
ETHYLBENZENE	ND	31	16 J	8 J	ND	ND	7 J
HEPTANE	11	450	490	10 J	ND	ND	ND
HEXACHLOROBUTADIENE	ND	ND	ND	ND	ND	110	ND
ISOPROPYL ALCOHOL	ND	ND	2 J	ND	ND	ND	1,600
M,P-XYLENES	7	51	21 J	15 J	ND	ND	ND
METHYLENE CHLORIDE	420	ND	ND	ND	ND	ND	ND
N-HEXANE	380	1,800	1,900	37	3 J	ND	ND
O-XYLENE	ND	21 J	13 J	7 J	ND	ND	9 J
PROPYLENE	ND	37	41	320	ND	ND	310
STYRENE	ND	ND	ND	ND	ND	ND	ND
TERT-BUTYL METHYL ETHER	ND	ND	ND	ND	ND	ND	ND
TETRACHLOROETHENE	ND	210	7 J	ND	ND	ND	ND
TETRAHYDROFURAN	ND	ND	ND	ND	ND	ND	ND
TOLUENE	46	36	ND	36	3 J	ND	ND
TRANS-1,2-DICHLOROETHENE	ND	6 J	6 J	ND	ND	ND	ND
TRANS-1,3-DICHLOROPROPENE	ND	ND	ND	ND	ND	ND	ND
TRICHLOROETHENE	ND	290	22 J	12 J	ND	ND	ND
TRICHLOROFLUOROMETHANE	ND	ND	ND	5 J	ND	ND	ND
VINYL ACETATE	ND	ND	ND	ND	ND	ND	ND
VINYL CHLORIDE	ND	19	21	4 J	ND	ND	ND
EPA 3C Landfill Gas (%)							
CARBON DIOXIDE	23 J	21	23 J	11	2	ND	ND
CARBON MONOXIDE	ND	ND	ND	ND	ND	ND	ND
METHANE	62 J	56 J	59 J	30	ND	ND	ND
NITROGEN	11	19	14	48	79	80	80
OXYGEN	2	4	3	11	18 J	19 J	21
EPA 25C Total Nonmethane Organic Carbon (ppmv)							
METHANE	620,000 J	570,000 J	600,000 J	320,000 J	ND	310	3,600 J
NONMETHANE ORGANIC CARBON	60	22	57	25	ND	ND	ND

APPENDIX C
QUARTERLY ANALYTICAL RESULTS (Continued)

Parcel E Nonstandard Data Gaps Investigation, Landfill Gas Characterization, Hunters Point Shipyard, San Francisco, California

Sample Location ID	SG26A	SG27A	SG27B	UCSF LIGHT	UCSF LIGHT	UCSF LIGHT
Sample ID	SG26SG001	SG27SG001	SG27SG002	SGLPSG001	SGLPSG002	SGLPSG003
Sample Date	04/03/2002	04/03/2002	04/03/2002	04/05/2002	08/01/2002	11/13/2002
EPA TO-14 VOA (µg/m3)						
1,1,1-TRICHLOROETHANE	ND	ND	ND	ND	ND	ND
1,1,2,2-TETRACHLOROETHANE	ND	ND	ND	8 J	ND	ND
1,1,2-TRICHLORO-1,2,2-TRIFLUOROETHANE	ND	ND	ND	19	ND	ND
1,1,2-TRICHLOROETHANE	ND	ND	ND	ND	ND	ND
1,1-DICHLOROETHANE	17 J	ND	21 J	ND	ND	ND
1,1-DICHLOROETHENE	ND	ND	ND	ND	ND	ND
1,2,4-TRICHLOROBENZENE	46 J	6	ND	ND	ND	ND
1,2,4-TRIMETHYLBENZENE	360	ND	150 J	ND	ND	ND
1,2-DIBROMOETHANE	ND	ND	ND	ND	ND	ND
1,2-DICHLORO-1,1,2,2-TETRAFLUOROETHANE	360	21	560 J	6 J	ND	ND
1,2-DICHLOROBENZENE	50	ND	ND	ND	ND	ND
1,2-DICHLOROETHANE	ND	ND	ND	ND	ND	ND
1,2-DICHLOROPROPANE	ND	ND	ND	ND	ND	ND
1,3,5-TRIMETHYLBENZENE	340	ND	200 J	7 J	ND	ND
1,3-BUTADIENE	ND	ND	ND	ND	ND	ND
1,3-DICHLOROBENZENE	11 J	ND	ND	ND	ND	ND
1,4-DICHLOROBENZENE	38 J	ND	ND	ND	ND	ND
1,4-DIOXANE	ND	ND	ND	ND	ND	ND
2-BUTANONE	ND	ND	ND	ND	ND	ND
2-HEXANONE	ND	ND	ND	ND	ND	ND
4-ETHYLTOLUENE	67	ND	56 J	6	ND	ND
4-METHYL-2-PENTANONE	ND	ND	ND	ND	ND	ND
ACETONE	710	ND	200 J	ND	39	ND
BENZENE	130	ND	75 J	3 J	ND	ND
BENZYL CHLORIDE	ND	ND	ND	ND	ND	ND
BROMODICHLOROMETHANE	ND	ND	ND	ND	ND	ND
BROMOFORM	ND	ND	ND	ND	ND	ND
BROMOMETHANE	ND	ND	ND	ND	ND	ND
CARBON DISULFIDE	10 J	ND	ND	ND	ND	ND
CARBON TETRACHLORIDE	ND	ND	ND	ND	ND	ND
CHLOROBENZENE	ND	ND	ND	ND	ND	ND
CHLOROETHANE	170	ND	140 J	ND	ND	ND
CHLOROFORM	ND	ND	ND	ND	ND	ND
CHLOROMETHANE	10 J	ND	5 J	ND	2 J	ND
CIS-1,2-DICHLOROETHENE	30	ND	44 J	ND	ND	ND
CIS-1,3-DICHLOROPROPENE	ND	ND	ND	ND	ND	ND

APPENDIX C
QUARTERLY ANALYTICAL RESULTS (Continued)

Parcel E Nonstandard Data Gaps Investigation, Landfill Gas Characterization, Hunters Point Shipyard, San Francisco, California

Sample Location ID	SG26A	SG27A	SG27B	UCSF LIGHT	UCSF LIGHT	UCSF LIGHT
Sample ID	SG26SG001	SG27SG001	SG27SG002	SGLPSG001	SGLPSG002	SGLPSG003
Sample Date	04/03/2002	04/03/2002	04/03/2002	04/05/2002	08/01/2002	11/13/2002
EPA TO-14 VOA (µg/m3)						
CYCLOHEXANE	460	ND	580 J	ND	ND	ND
DIBROMOCHLOROMETHANE	ND	ND	ND	ND	ND	ND
DICHLORODIFLUOROMETHANE	170	31	62 J	ND	6 J	ND
ETHANOL	49	ND	4 J	ND	ND	ND
ETHYLBENZENE	130	ND	38 J	4 J	ND	ND
HEPTANE	500	ND	480 J	ND	ND	ND
HEXACHLOROBUTADIENE	49 J	ND	36 J	ND	ND	ND
HEXANE	NA	NA	NA	NA	4 J	ND
ISOPROPYL ALCOHOL	ND	ND	ND	ND	ND	ND
M,P-XYLENES	600	ND	240 J	ND	6 J	3 J
METHYLENE CHLORIDE	ND	ND	ND	ND	ND	ND
N-HEXANE	890	ND	780 J	ND	NA	NA
O-XYLENE	480	ND	260 J	4 J	ND	ND
PROPYLENE	910	ND	70 J	ND	4	ND
STYRENE	15 J	ND	7 J	ND	ND	ND
TERT-BUTYL METHYL ETHER	ND	ND	ND	ND	ND	ND
TETRACHLOROETHENE	46 J	ND	ND	ND	ND	ND
TETRAHYDROFURAN	ND	ND	ND	ND	ND	ND
TOLUENE	180	ND	32 J	ND	5 J	ND
TRANS-1,2-DICHLOROETHENE	ND	ND	ND	ND	ND	ND
TRANS-1,3-DICHLOROPROPENE	ND	ND	ND	ND	ND	ND
TRICHLOROETHENE	33 J	ND	13 J	ND	ND	ND
TRICHLOROFLUOROMETHANE	ND	ND	ND	ND	ND	ND
VINYL ACETATE	ND	ND	ND	ND	ND	ND
VINYL CHLORIDE	30	ND	13 J	ND	ND	ND
EPA 3C Landfill Gas (%)						
CARBON DIOXIDE	14	6	21	ND	ND	ND
CARBON MONOXIDE	ND	ND	ND	ND	ND	ND
METHANE	36	ND	50 J	ND	ND	ND
NITROGEN	41	92 J	24	81	80	82
OXYGEN	11	ND	2	19 J	20	18
EPA 25C Total Nonmethane Organic Carbon ppmv)						
METHANE	360,000 J	ND	500,000 J	ND	300	ND
NONMETHANE ORGANIC CARBON	79	ND	120	ND	0.2	5

APPENDIX C
QUARTERLY ANALYTICAL RESULTS (Continued)

Parcel E Nonstandard Data Gaps Investigation, Landfill Gas Characterization, Hunters Point Shipyard, San Francisco, California

Sample Location ID	GMP01	GMP01	GMP01	GMP01	GMP01A
Sample ID	GMP01SG001	GMP01SG002	GMP01SG003	GMP01SG004	GMP01ASG001
Sample Date	04/22/2002	05/22/2002	05/22/2002	07/31/2002	11/13/2002
EPA TO-14 VOA (µg/m3)					
1,1,1-TRICHLOROETHANE	ND	ND	ND	ND	ND
1,1,2,2-TETRACHLOROETHANE	ND	ND	ND	ND	ND
1,1,2-TRICHLORO-1,2,2-TRIFLUOROETHANE	ND	ND	ND	ND	ND
1,1,2-TRICHLOROETHANE	ND	ND	ND	ND	ND
1,1-DICHLOROETHANE	59 J	41 J	49 J	74	22 J
1,1-DICHLOROETHENE	ND	ND	ND	ND	ND
1,2,4-TRICHLOROBENZENE	ND	ND	ND	ND	ND
1,2,4-TRIMETHYLBENZENE	6,700 J	2,600 J	1,900 J	180	ND
1,2-DIBROMOETHANE	ND	ND	ND	ND	ND
1,2-DICHLORO-1,1,2,2-TETRAFLUOROETHANE	260 J	71 J	71 J	270	64 J
1,2-DICHLOROBENZENE	ND	17 J	18 J	20	9 J
1,2-DICHLOROETHANE	14 J	20 J	ND	11	ND
1,2-DICHLOROPROPANE	ND	12 J	ND	ND	ND
1,3,5-TRIMETHYLBENZENE	1,700 J	1,100 J	800 J	160	ND
1,3-BUTADIENE	ND	ND	ND	ND	ND
1,3-DICHLOROBENZENE	ND	40 J	51 J	49	33 J
1,4-DICHLOROBENZENE	ND	480 J	530 J	670	300 J
1,4-DIOXANE	ND	ND	ND	ND	ND
2-BUTANONE	ND	ND	ND	ND	ND
2-HEXANONE	ND	ND	ND	ND	ND
4-ETHYLTOLUENE	1,100 J	930 J	660 J	110	ND
4-METHYL-2-PENTANONE	ND	ND	ND	ND	ND
ACETONE	ND	ND	ND	ND	ND
BENZENE	330 J	550 J	420 J	320	13 J
BENZYL CHLORIDE	ND	ND	ND	ND	ND
BROMODICHLOROMETHANE	ND	ND	ND	ND	ND
BROMOFORM	ND	ND	ND	ND	ND
BROMOMETHANE	ND	ND	ND	ND	ND
CARBON DISULFIDE	19 J	8 J	ND	ND	ND
CARBON TETRACHLORIDE	ND	ND	ND	ND	ND
CHLOROBENZENE	1,200 J	2,300 J	2,000 J	1,600	120 J
CHLOROETHANE	170 J	78 J	70 J	160	8 J
CHLOROFORM	ND	ND	ND	ND	ND
CHLOROMETHANE	ND	15 J	ND	ND	ND
CIS-1,2-DICHLOROETHENE	24 J	28 J	25 J	40	ND
CIS-1,3-DICHLOROPROPENE	ND	ND	ND	ND	ND

APPENDIX C
QUARTERLY ANALYTICAL RESULTS (Continued)

Parcel E Nonstandard Data Gaps Investigation, Landfill Gas Characterization, Hunters Point Shipyard, San Francisco, California

Sample Location ID	GMP01	GMP01	GMP01	GMP01	GMP01A
Sample ID	GMP01SG001	GMP01SG002	GMP01SG003	GMP01SG004	GMP01ASG001
Sample Date	04/22/2002	05/22/2002	05/22/2002	07/31/2002	11/13/2002
EPA TO-14 VOA (µg/m3)					
CYCLOHEXANE	1,800 J	2,200 J	2,100 J	980	63 J
DIBROMOCHLOROMETHANE	ND	ND	ND	ND	ND
DICHLORODIFLUOROMETHANE	500 J	120 J	170 J	4,200 J	290 J
ETHANOL	ND	ND	ND	ND	ND
ETHYLBENZENE	150 J	880 J	570 J	75	14 J
HEPTANE	1,600 J	2,600 J	2,100 J	870	54 J
HEXACHLOROBUTADIENE	ND	ND	ND	ND	ND
HEXANE	1,700 J	2,200 J	2,000 J	1,500	180 J
ISOPROPYL ALCOHOL	ND	ND	ND	45	ND
M,P-XYLENES	580 J	480 J	310 J	ND	14 J
METHYLENE CHLORIDE	ND	ND	ND	ND	ND
O-XYLENE	86 J	130 J	97 J	25	14 J
PROPYLENE	2,300 J	560 J	580 J	980	300 J
STYRENE	ND	10 J	ND	ND	ND
TERT-BUTYL METHYL ETHER	ND	ND	ND	ND	ND
TETRACHLOROETHENE	ND	21 J	17 J	10 J	14 J
TETRAHYDROFURAN	24 J	ND	ND	23	ND
TOLUENE	470 J	210 J	130 J	ND	18 J
TRANS-1,2-DICHLOROETHENE	40 J	44 J	40 J	80	ND
TRANS-1,3-DICHLOROPROPENE	ND	ND	ND	ND	ND
TRICHLOROETHENE	ND	29 J	23 J	21	7 J
TRICHLOROFLUOROMETHANE	ND	ND	ND	ND	ND
VINYL ACETATE	ND	ND	ND	ND	ND
VINYL CHLORIDE	190 J	68 J	55 J	180	15 J
EPA 3C Landfill Gas (%)					
CARBON DIOXIDE	22	26	26	28	12
CARBON MONOXIDE	ND	ND	ND	ND	ND
METHANE	33	30	28	45	4
NITROGEN	45	43	45	26	83
OXYGEN	ND	0.9	0.7	0.7	1
EPA 25C Total Nonmethane Organic Carbon (ppmv)					
METHANE	350,000 J	NA	NA	NA	NA
NONMETHANE ORGANIC CARBON	39	57	58	26	32

APPENDIX C
QUARTERLY ANALYTICAL RESULTS (Continued)

Parcel E Nonstandard Data Gaps Investigation, Landfill Gas Characterization, Hunters Point Shipyard, San Francisco, California

Sample Location ID	GMP02	GMP02	GMP02	GMP02A	GMP02A
Sample ID	GMP02SG001	GMP02SG002	GMP02SG003	GMP02ASG001	GMP02ASG002
Sample Date	04/22/2002	05/22/2002	07/31/2002	11/13/2002	11/13/2002
EPA TO-14 VOA (µg/m3)					
1,1,1-TRICHLOROETHANE	ND	13 J	ND	ND	ND
1,1,2,2-TETRACHLOROETHANE	ND	ND	ND	70 J	ND
1,1,2-TRICHLORO-1,2,2-TRIFLUOROETHANE	ND	ND	ND	ND	ND
1,1,2-TRICHLOROETHANE	ND	ND	ND	ND	ND
1,1-DICHLOROETHANE	ND	26 J	17	7 J	7 J
1,1-DICHLOROETHENE	ND	12 J	ND	ND	ND
1,2,4-TRICHLOROBENZENE	ND	ND	ND	ND	ND
1,2,4-TRIMETHYLBENZENE	ND	100 J	1,600	46 J	46 J
1,2-DIBROMOETHANE	ND	13 J	ND	ND	ND
1,2-DICHLORO-1,1,2,2-TETRAFLUOROETHANE	610 J	640 J	1,100	78 J	78 J
1,2-DICHLOROBENZENE	ND	35 J	13 J	16 J	16 J
1,2-DICHLOROETHANE	ND	23 J	12	ND	ND
1,2-DICHLOROPROPANE	ND	ND	ND	ND	ND
1,3,5-TRIMETHYLBENZENE	ND	60 J	75	44 J	44 J
1,3-BUTADIENE	ND	ND	ND	ND	ND
1,3-DICHLOROBENZENE	ND	26 J	9 J	ND	ND
1,4-DICHLOROBENZENE	ND	160 J	140 J	31 J	38 J
1,4-DIOXANE	ND	ND	ND	ND	ND
2-BUTANONE	ND	ND	ND	ND	ND
2-HEXANONE	ND	ND	ND	ND	ND
4-ETHYLTOLUENE	ND	29 J	29 J	ND	9 J
4-METHYL-2-PENTANONE	ND	ND	ND	ND	ND
ACETONE	ND	ND	ND	ND	ND
BENZENE	210 J	240 J	190	19 J	19 J
BENZYL CHLORIDE	ND	ND	ND	ND	ND
BROMODICHLOROMETHANE	ND	ND	ND	ND	ND
BROMOFORM	ND	ND	ND	ND	ND
BROMOMETHANE	ND	10 J	ND	ND	ND
CARBON DISULFIDE	240 J	32 J	ND	57 J	73 J
CARBON TETRACHLORIDE	ND	11 J	ND	ND	ND
CHLOROBENZENE	520 J	750 J	940 J	ND	ND
CHLOROETHANE	200 J	250 J	180	14 J	14 J
CHLOROFORM	ND	8 J	ND	ND	ND
CHLOROMETHANE	ND	ND	ND	71 J	74 J
CIS-1,2-DICHLOROETHENE	36 J	40 J	34	ND	4 J
CIS-1,3-DICHLOROPROPENE	ND	ND	ND	ND	ND

APPENDIX C
QUARTERLY ANALYTICAL RESULTS (Continued)

Parcel E Nonstandard Data Gaps Investigation, Landfill Gas Characterization, Hunters Point Shipyard, San Francisco, California

Sample Location ID	GMP02	GMP02	GMP02	GMP02A	GMP02A
Sample ID	GMP02SG001	GMP02SG002	GMP02SG003	GMP02ASG001	GMP02ASG002
Sample Date	04/22/2002	05/22/2002	07/31/2002	11/13/2002	11/13/2002
EPA TO-14 VOA (µg/m3)					
CYCLOHEXANE	2,700 J	2,800 J	1,400	180 J	180 J
DIBROMOCHLOROMETHANE	ND	ND	ND	ND	ND
DICHLORODIFLUOROMETHANE	610 J	600 J	1,500	220 J	220 J
ETHANOL	260 J	ND	ND	ND	ND
ETHYLBENZENE	41 J	57 J	29 J	11 J	13 J
HEPTANE	3,000 J	3,100 J	2,100	210 J	220 J
HEXACHLOROBUTADIENE	ND	38 J	ND	ND	ND
HEXANE	3,100 J	2,900 J	2,600	320 J	340 J
ISOPROPYL ALCOHOL	67 J	ND	ND	ND	ND
M,P-XYLENES	100 J	180 J	ND	53 J	57 J
METHYLENE CHLORIDE	ND	ND	53	ND	ND
O-XYLENE	41 J	70 J	43	48 J	53 J
PROPYLENE	4,200 J	3,200 J	1,100	3,300	2,500
STYRENE	ND	ND	ND	ND	ND
TERT-BUTYL METHYL ETHER	ND	ND	ND	ND	ND
TETRACHLOROETHENE	ND	21 J	6 J	19 J	21 J
TETRAHYDROFURAN	ND	ND	ND	ND	ND
TOLUENE	36 J	ND	ND	ND	ND
TRANS-1,2-DICHLOROETHENE	ND	18 J	12	ND	ND
TRANS-1,3-DICHLOROPROPENE	ND	ND	ND	ND	ND
TRICHLOROETHENE	ND	22 J	11	7 J	8 J
TRICHLOROFLUOROMETHANE	ND	14 J	ND	ND	ND
VINYL ACETATE	ND	ND	ND	ND	ND
VINYL CHLORIDE	39 J	47 J	31	4 J	4 J
EPA 3C Landfill Gas (%)					
CARBON DIOXIDE	23	28	29	9	9
CARBON MONOXIDE	ND	ND	ND	ND	ND
METHANE	58	56	60	2	2
NITROGEN	17	15	10	88	88
OXYGEN	2	1	1	2	2
EPA 25C Total Nonmethane Organic Carbon (ppmv)					
METHANE	610,000 J	NA	NA	NA	NA
NONMETHANE ORGANIC CARBON	72	110	67	44	48

APPENDIX C
QUARTERLY ANALYTICAL RESULTS (Continued)

Parcel E Nonstandard Data Gaps Investigation, Landfill Gas Characterization, Hunters Point Shipyard, San Francisco, California

Sample Location ID	GMP03	GMP03	GMP03	GMP03	GMP04	GMP04	GMP04
Sample ID	GMP03SG001	GMP03SG002	GMP03SG003	GMP03SG004	GMP04SG001	GMP04SG002	GMP04SG003
Sample Date	04/22/2002	05/22/2002	05/22/2002	07/31/2002	04/22/2002	05/22/2002	07/31/2002
EPA TO-14 VOA (µg/m3)							
1,1,1-TRICHLOROETHANE	ND	30 J	52 J	ND	ND	ND	ND
1,1,2,2-TETRACHLOROETHANE	ND	ND	ND	ND	ND	ND	ND
1,1,2-TRICHLORO-1,2,2-TRIFLUOROETHANE	ND	ND	ND	ND	ND	ND	ND
1,1,2-TRICHLOROETHANE	ND	ND	ND	ND	ND	ND	ND
1,1-DICHLOROETHANE	26 J	41 J	58 J	22	ND	45 J	26
1,1-DICHLOROETHENE	ND	28 J	44 J	ND	ND	21 J	ND
1,2,4-TRICHLOROBENZENE	ND	34 J	40 J	ND	ND	ND	ND
1,2,4-TRIMETHYLBENZENE	ND	100 J	110 J	ND	ND	40 J	36
1,2-DIBROMOETHANE	ND	34 J	51 J	ND	ND	24 J	ND
1,2-DICHLORO-1,1,2,2-TETRAFLUOROETHANE	740 J	780 J	850 J	520	1,700	1,500 J	640
1,2-DICHLOROBENZENE	ND	51 J	60 J	10	ND	36 J	21
1,2-DICHLOROETHANE	16 J	23 J	45 J	ND	ND	14 J	6 J
1,2-DICHLOROPROPANE	ND	ND	ND	ND	ND	ND	ND
1,3,5-TRIMETHYLBENZENE	ND	90 J	110 J	32	ND	28 J	15
1,3-BUTADIENE	ND	ND	ND	ND	ND	ND	ND
1,3-DICHLOROBENZENE	ND	42 J	54 J	9 J	ND	23 J	8 J
1,4-DICHLOROBENZENE	ND	170 J	180 J	130	ND	130 J	220
1,4-DIOXANE	ND	ND	ND	ND	ND	ND	ND
2-BUTANONE	ND	ND	ND	ND	ND	ND	ND
2-HEXANONE	ND	ND	ND	ND	ND	ND	ND
4-ETHYLTOLUENE	ND	37 J	49 J	9	ND	23 J	12
4-METHYL-2-PENTANONE	ND	ND	ND	ND	ND	ND	ND
ACETONE	ND	ND	ND	ND	ND	ND	ND
BENZENE	350 J	310 J	330 J	160	330	330 J	220
BENZYL CHLORIDE	ND	ND	ND	ND	ND	ND	ND
BROMODICHLOROMETHANE	ND	ND	ND	ND	ND	ND	ND
BROMOFORM	ND	ND	ND	ND	ND	ND	ND
BROMOMETHANE	ND	25 J	43 J	ND	ND	18 J	ND
CARBON DISULFIDE	82 J	38 J	47 J	ND	150	44 J	ND
CARBON TETRACHLORIDE	ND	28 J	45 J	ND	ND	20 J	ND
CHLOROBENZENE	1,400 J	1,400 J	1,400 J	1,400	300	300 J	370
CHLOROETHANE	140 J	170 J	190 J	110	150	150 J	67
CHLOROFORM	ND	27 J	39 J	ND	ND	15 J	ND
CHLOROMETHANE	ND	ND	25 J	ND	ND	ND	ND
CIS-1,2-DICHLOROETHENE	35 J	52 J	60 J	39	60	68 J	52
CIS-1,3-DICHLOROPROPENE	ND	18 J	28 J	ND	ND	12 J	ND

APPENDIX C
QUARTERLY ANALYTICAL RESULTS (Continued)

Parcel E Nonstandard Data Gaps Investigation, Landfill Gas Characterization, Hunters Point Shipyard, San Francisco, California

Sample Location ID	GMP03	GMP03	GMP03	GMP03	GMP04	GMP04	GMP04
Sample ID	GMP03SG001	GMP03SG002	GMP03SG003	GMP03SG004	GMP04SG001	GMP04SG002	GMP04SG003
Sample Date	04/22/2002	05/22/2002	05/22/2002	07/31/2002	04/22/2002	05/22/2002	07/31/2002
EPA TO-14 VOA (µg/m3)							
CYCLOHEXANE	3,000 J	3,000 J	3,100 J	910	2,500	1,700 J	700
DIBROMOCHLOROMETHANE	ND	ND	ND	ND	ND	26 J	ND
DICHLORODIFLUOROMETHANE	2,800 J	1,700 J	1,700 J	160	170	210 J	91
ETHANOL	1,700 J	ND	ND	ND	ND	ND	ND
ETHYLBENZENE	34 J	44 J	53 J	ND	30 J	42 J	ND
HEPTANE	3,300 J	3,200 J	3,200 J	1,700	2,200	1,700 J	920
HEXACHLOROBUTADIENE	ND	76 J	98 J	ND	ND	47 J	ND
HEXANE	3,400 J	2,900 J	2,900 J	3,000 J	1,700	1,400 J	1,100
ISOPROPYL ALCOHOL	470 J	ND	ND	ND	120	ND	6
M,P-XYLENES	76 J	100 J	130 J	ND	90	84 J	ND
METHYLENE CHLORIDE	ND	ND	ND	ND	ND	ND	110
O-XYLENE	36 J	48 J	57 J	ND	42 J	53 J	29
PROPYLENE	5,400 J	4,700 J	4,600 J	420	4,500	3,000 J	250
STYRENE	ND	ND	ND	ND	ND	ND	ND
TERT-BUTYL METHYL ETHER	ND	ND	ND	ND	ND	ND	ND
TETRACHLOROETHENE	ND	44 J	59 J	8 J	37 J	66 J	30
TETRAHYDROFURAN	ND	ND	ND	ND	ND	ND	ND
TOLUENE	ND	ND	ND	ND	38 J	ND	ND
TRANS-1,2-DICHLOROETHENE	14 J	37 J	48 J	19	ND	27 J	8
TRANS-1,3-DICHLOROPROPENE	ND	14 J	22 J	ND	ND	10 J	ND
TRICHLOROETHENE	ND	45 J	66 J	19	60 J	77 J	52
TRICHLOROFLUOROMETHANE	ND	37 J	56 J	ND	ND	39 J	6 J
VINYL ACETATE	ND	ND	ND	ND	ND	ND	ND
VINYL CHLORIDE	170 J	180 J	190 J	88	120	140 J	55
EPA 3C Landfill Gas (%)							
CARBON DIOXIDE	24	28	28	30	23	26	28
CARBON MONOXIDE	ND	ND	ND	ND	ND	ND	ND
METHANE	64	60	61	64	62	52	46
NITROGEN	11	11	10	6	13	19	25
OXYGEN	1	1	0.7	0.3	1	2	0.5
EPA 25C Total Nonmethane Organic Carbon (ppmv)							
METHANE	670,000 J	NA	NA	NA	650,000 J	NA	NA
NONMETHANE ORGANIC CARBON	94	140	140	120	200	230	130

APPENDIX C
QUARTERLY ANALYTICAL RESULTS (Continued)

Parcel E Nonstandard Data Gaps Investigation, Landfill Gas Characterization, Hunters Point Shipyard, San Francisco, California

Sample Location ID	GMP04A	GMP04A	GMP05	GMP05	GMP05	GMP05
Sample ID	GMP04ASG001	GMP04ASG002	GMP05SG001	GMP05SG002	GMP05MER001	GMP05SG003
Sample Date	11/13/2002	11/13/2002	04/22/2002	05/22/2002	06/05/2002	07/31/2002
EPA TO-14 VOA (µg/m3)						
1,1,1-TRICHLOROETHANE	ND	ND	ND	27 J	NA	ND
1,1,2,2-TETRACHLOROETHANE	ND	ND	ND	ND	NA	ND
1,1,2-TRICHLORO-1,2,2-TRIFLUOROETHANE	ND	ND	ND	ND	NA	ND
1,1,2-TRICHLOROETHANE	ND	ND	ND	ND	NA	ND
1,1-DICHLOROETHANE	8	7	120	120 J	NA	200
1,1-DICHLOROETHENE	ND	ND	ND	25 J	NA	ND
1,2,4-TRICHLOROBENZENE	ND	ND	ND	39 J	NA	ND
1,2,4-TRIMETHYLBENZENE	4 J	ND	ND	25 J	NA	44
1,2-DIBROMOETHANE	ND	ND	ND	37 J	NA	ND
1,2-DICHLORO-1,1,2,2-TETRAFLUOROETHANE	200	210	910	540 J	NA	520
1,2-DICHLOROBENZENE	11	12	ND	37 J	NA	ND
1,2-DICHLOROETHANE	ND	ND	ND	23 J	NA	4 J
1,2-DICHLOROPROPANE	ND	ND	ND	ND	NA	ND
1,3,5-TRIMETHYLBENZENE	ND	ND	ND	23 J	NA	13
1,3-BUTADIENE	ND	ND	ND	ND	NA	ND
1,3-DICHLOROBENZENE	ND	ND	ND	32 J	NA	ND
1,4-DICHLOROBENZENE	120	120	ND	38 J	NA	10 J
1,4-DIOXANE	ND	ND	ND	ND	NA	ND
2-BUTANONE	ND	ND	ND	ND	NA	ND
2-HEXANONE	ND	ND	ND	ND	NA	ND
4-ETHYLTOLUENE	ND	ND	ND	19 J	NA	6 J
4-METHYL-2-PENTANONE	ND	ND	ND	ND	NA	ND
ACETONE	ND	ND	ND	ND	NA	ND
BENZENE	7	7	43 J	30 J	NA	32
BENZYL CHLORIDE	ND	ND	ND	ND	NA	ND
BROMODICHLOROMETHANE	ND	ND	ND	ND	NA	ND
BROMOFORM	ND	ND	ND	ND	NA	ND
BROMOMETHANE	ND	ND	ND	17 J	NA	ND
CARBON DISULFIDE	31	ND	76	700 J	NA	ND
CARBON TETRACHLORIDE	ND	ND	ND	25 J	NA	ND
CHLOROBENZENE	ND	ND	ND	ND	NA	ND
CHLOROETHANE	ND	ND	4,300	3,200 J	NA	4,000 J
CHLOROFORM	ND	ND	ND	ND	NA	ND
CHLOROMETHANE	ND	ND	ND	ND	NA	90
CIS-1,2-DICHLOROETHENE	ND	ND	30 J	32 J	NA	68
CIS-1,3-DICHLOROPROPENE	ND	ND	ND	19 J	NA	ND

APPENDIX C
QUARTERLY ANALYTICAL RESULTS (Continued)

Parcel E Nonstandard Data Gaps Investigation, Landfill Gas Characterization, Hunters Point Shipyard, San Francisco, California

Sample Location ID	GMP04A	GMP04A	GMP05	GMP05	GMP05	GMP05
Sample ID	GMP04ASG001	GMP04ASG002	GMP05SG001	GMP05SG002	GMP05MER001	GMP05SG003
Sample Date	11/13/2002	11/13/2002	04/22/2002	05/22/2002	06/05/2002	07/31/2002
EPA TO-14 VOA (µg/m3)						
CYCLOHEXANE	38	42	2,500	1,500 J	NA	250
DIBROMOCHLOROMETHANE	ND	ND	ND	41 J	NA	ND
DICHLORODIFLUOROMETHANE	240	230	600	390 J	NA	130
ETHANOL	9,900	ND	81	ND	NA	ND
ETHYLBENZENE	7	5 J	ND	24 J	NA	ND
HEPTANE	26	30	1,300	830 J	NA	130
HEXACHLOROBUTADIENE	ND	ND	ND	86 J	NA	ND
HEXANE	39	36	1,900	1,100 J	NA	1,100
ISOPROPYL ALCOHOL	220	ND	ND	ND	NA	ND
M,P-XYLENES	12	12	39 J	ND	NA	ND
METHYLENE CHLORIDE	ND	ND	ND	ND	NA	46
O-XYLENE	8	7	18 J	24 J	NA	ND
PROPYLENE	81	93	2,100	1,800 J	NA	ND
STYRENE	ND	ND	ND	ND	NA	ND
T-BUTYL MERCAPTAN	NA	NA	NA	NA	56	NA
TERT-BUTYL METHYL ETHER	ND	ND	ND	ND	NA	ND
TETRACHLOROETHENE	37	37	ND	39 J	NA	10 J
TETRAHYDROFURAN	ND	ND	ND	ND	NA	ND
TETRAHYDROTHIOPHENE	NA	NA	NA	NA	ND	NA
TOLUENE	ND	ND	ND	ND	NA	ND
TRANS-1,2-DICHLOROETHENE	ND	ND	15 J	26 J	NA	25
TRANS-1,3-DICHLOROPROPENE	ND	ND	ND	ND	NA	ND
TRICHLOROETHENE	21	22	25 J	41 J	NA	27
TRICHLOROFLUOROMETHANE	97	91	ND	29 J	NA	ND
VINYL ACETATE	ND	ND	ND	ND	NA	ND
VINYL CHLORIDE	ND	ND	220	140 J	NA	160
EPA 3C Landfill Gas (%)						
CARBON DIOXIDE	11	11	18	18	NA	29
CARBON MONOXIDE	ND	ND	ND	ND	NA	ND
METHANE	0.1 J	ND	51	30	NA	41
NITROGEN	88	87	29	52	NA	30
OXYGEN	1	2	2	ND	NA	0.6
EPA 25C Total Nonmethane Organic Carbon (ppmv)						
METHANE	940	950	540,000 J	NA	NA	NA

APPENDIX C
QUARTERLY ANALYTICAL RESULTS (Continued)

Parcel E Nonstandard Data Gaps Investigation, Landfill Gas Characterization, Hunters Point Shipyard, San Francisco, California

Sample Location ID	GMP04A	GMP04A	GMP05	GMP05	GMP05	GMP05
Sample ID	GMP04ASG001	GMP04ASG002	GMP05SG001	GMP05SG002	GMP05MER001	GMP05SG003
Sample Date	11/13/2002	11/13/2002	04/22/2002	05/22/2002	06/05/2002	07/31/2002
EPA 25C Total Nonmethane Organic Carbon (ppmv)						
NONMETHANE ORGANIC CARBON	8	2	210	160	NA	210

APPENDIX C
QUARTERLY ANALYTICAL RESULTS (Continued)

Parcel E Nonstandard Data Gaps Investigation, Landfill Gas Characterization, Hunters Point Shipyard, San Francisco, California

Sample Location ID	GMP06	GMP06	GMP06	GMP06
Sample ID	GMP06SG001	GMP06SG002	GMP06MER001	GMP06SG003
Sample Date	04/22/2002	05/22/2002	06/05/2002	07/31/2002
EPA TO-14 VOA (µg/m3)				
1,1,1-TRICHLOROETHANE	ND	46 J	NA	ND
1,1,2,2-TETRACHLOROETHANE	ND	ND	NA	ND
1,1,2-TRICHLORO-1,2,2-TRIFLUOROETHANE	ND	ND	NA	ND
1,1,2-TRICHLOROETHANE	ND	ND	NA	ND
1,1-DICHLOROETHANE	24 J	62 J	NA	35
1,1-DICHLOROETHENE	ND	34 J	NA	ND
1,2,4-TRICHLOROBENZENE	ND	ND	NA	ND
1,2,4-TRIMETHYLBENZENE	11 J	40 J	NA	36
1,2-DIBROMOETHANE	ND	48 J	NA	ND
1,2-DICHLORO-1,1,2,2-TETRAFLUOROETHANE	930 J	1,400 J	NA	920
1,2-DICHLOROBENZENE	ND	ND	NA	ND
1,2-DICHLOROETHANE	ND	ND	NA	ND
1,2-DICHLOROPROPANE	ND	ND	NA	ND
1,3,5-TRIMETHYLBENZENE	8 J	41 J	NA	12
1,3-BUTADIENE	ND	ND	NA	ND
1,3-DICHLOROBENZENE	ND	ND	NA	ND
1,4-DICHLOROBENZENE	ND	ND	NA	ND
1,4-DIOXANE	ND	ND	NA	ND
2-BUTANONE	ND	ND	NA	ND
2-HEXANONE	ND	ND	NA	ND
4-ETHYLTOLUENE	ND	26 J	NA	ND
4-METHYL-2-PENTANONE	ND	ND	NA	ND
ACETONE	ND	ND	NA	ND
BENZENE	17 J	36 J	NA	8
BENZYL CHLORIDE	ND	ND	NA	ND
BROMODICHLOROMETHANE	ND	ND	NA	ND
BROMOFORM	ND	81 J	NA	ND
BROMOMETHANE	ND	32 J	NA	ND
CARBON DISULFIDE	7 J	32 J	NA	ND
CARBON TETRACHLORIDE	ND	42 J	NA	ND
CHLOROBENZENE	ND	ND	NA	ND
CHLOROETHANE	20 J	56 J	NA	18
CHLOROFORM	ND	33 J	NA	ND
CHLOROMETHANE	ND	ND	NA	ND
CIS-1,2-DICHLOROETHENE	20 J	44 J	NA	22
CIS-1,3-DICHLOROPROPENE	ND	25 J	NA	ND

APPENDIX C
QUARTERLY ANALYTICAL RESULTS (Continued)

Parcel E Nonstandard Data Gaps Investigation, Landfill Gas Characterization, Hunters Point Shipyard, San Francisco, California

Sample Location ID	GMP06	GMP06	GMP06	GMP06
Sample ID	GMP06SG001	GMP06SG002	GMP06MER001	GMP06SG003
Sample Date	04/22/2002	05/22/2002	06/05/2002	07/31/2002
EPA TO-14 VOA (µg/m3)				
CYCLOHEXANE	990 J	1,100 J	NA	660
DIBROMOCHLOROMETHANE	ND	54 J	NA	ND
DICHLORODIFLUOROMETHANE	150 J	220 J	NA	110
ETHANOL	ND	ND	NA	ND
ETHYLBENZENE	7 J	34 J	NA	ND
HEPTANE	230 J	310 J	NA	280
HEXACHLOROBUTADIENE	42 J	98 J	NA	ND
HEXANE	1,200 J	1,100 J	NA	1,100
ISOPROPYL ALCOHOL	ND	ND	NA	ND
M,P-XYLENES	14 J	66 J	NA	ND
METHYLENE CHLORIDE	ND	ND	NA	ND
O-XYLENE	9 J	35 J	NA	ND
PROPYLENE	410 J	560 J	NA	ND
STYRENE	ND	ND	NA	ND
T-BUTYL MERCAPTAN	NA	NA	1,500 J	NA
TERT-BUTYL METHYL ETHER	ND	ND	NA	ND
TETRACHLOROETHENE	ND	52 J	NA	ND
TETRAHYDROFURAN	ND	ND	NA	ND
TETRAHYDROTHIOPHENE	NA	NA	ND	NA
TOLUENE	ND	ND	NA	ND
TRANS-1,2-DICHLOROETHENE	ND	32 J	NA	6 J
TRANS-1,3-DICHLOROPROPENE	ND	24 J	NA	ND
TRICHLOROETHENE	15 J	48 J	NA	9 J
TRICHLOROFLUOROMETHANE	ND	49 J	NA	ND
VINYL ACETATE	ND	ND	NA	ND
VINYL CHLORIDE	24 J	52 J	NA	23
EPA 3C Landfill Gas (%)				
CARBON DIOXIDE	19	22	NA	22
CARBON MONOXIDE	ND	ND	NA	ND
METHANE	69	61	NA	49
NITROGEN	10	17	NA	28
OXYGEN	0.7	0.5	NA	0.5
EPA 25C Total Nonmethane Organic Carbon (ppmv)				
METHANE	730,000 J	NA	NA	NA

APPENDIX C
QUARTERLY ANALYTICAL RESULTS (Continued)

Parcel E Nonstandard Data Gaps Investigation, Landfill Gas Characterization, Hunters Point Shipyard, San Francisco, California

Sample Location ID	GMP06	GMP06	GMP06	GMP06
Sample ID	GMP06SG001	GMP06SG002	GMP06MER001	GMP06SG003
Sample Date	04/22/2002	05/22/2002	06/05/2002	07/31/2002
EPA 25C Total Nonmethane Organic Carbon (ppmv)				
NONMETHANE ORGANIC CARBON	300	320	NA	210

APPENDIX C
QUARTERLY ANALYTICAL RESULTS (Continued)

Parcel E Nonstandard Data Gaps Investigation, Landfill Gas Characterization, Hunters Point Shipyard, San Francisco, California

Sample Location ID	GMP07	GMP07	GMP07	GMP07	GMP07A
Sample ID	GMP07SG001	GMP07SG002	GMP07SG003	GMP07SG004	GMP07ASG001
Sample Date	04/22/2002	04/22/2002	05/22/2002	07/31/2002	11/13/2002
EPA TO-14 VOA (µg/m3)					
1,1,1-TRICHLOROETHANE	ND	ND	25 J	ND	ND
1,1,2,2-TETRACHLOROETHANE	ND	ND	ND	ND	ND
1,1,2-TRICHLORO-1,2,2-TRIFLUOROETHANE	ND	ND	ND	ND	ND
1,1,2-TRICHLOROETHANE	ND	ND	ND	ND	ND
1,1-DICHLOROETHANE	13 J	ND	32 J	18	ND
1,1-DICHLOROETHENE	ND	ND	17 J	ND	ND
1,2,4-TRICHLOROBENZENE	ND	49 J	31 J	ND	ND
1,2,4-TRIMETHYLBENZENE	9 J	30 J	20 J	200	ND
1,2-DIBROMOETHANE	ND	ND	25 J	ND	ND
1,2-DICHLORO-1,1,2,2-TETRAFLUOROETHANE	1,200	1,300 J	1,400 J	1,100	120
1,2-DICHLOROBENZENE	ND	19 J	ND	ND	ND
1,2-DICHLOROETHANE	ND	ND	19 J	ND	ND
1,2-DICHLOROPROPANE	ND	ND	ND	ND	ND
1,3,5-TRIMETHYLBENZENE	ND	ND	24 J	65	ND
1,3-BUTADIENE	ND	ND	ND	ND	ND
1,3-DICHLOROBENZENE	ND	ND	ND	ND	ND
1,4-DICHLOROBENZENE	ND	ND	ND	ND	ND
1,4-DIOXANE	ND	11 J	ND	ND	ND
2-BUTANONE	ND	ND	ND	ND	ND
2-HEXANONE	ND	ND	ND	ND	ND
4-ETHYLTOLUENE	ND	14 J	19 J	21	ND
4-METHYL-2-PENTANONE	ND	ND	ND	ND	ND
ACETONE	ND	ND	ND	ND	ND
BENZENE	7 J	10 J	14 J	3 J	ND
BENZYL CHLORIDE	ND	ND	ND	ND	ND
BROMODICHLOROMETHANE	ND	ND	34 J	ND	ND
BROMOFORM	ND	ND	34 J	ND	ND
BROMOMETHANE	ND	ND	19 J	ND	ND
CARBON DISULFIDE	ND	11 J	24 J	ND	35
CARBON TETRACHLORIDE	ND	ND	22 J	ND	ND
CHLOROBENZENE	ND	ND	ND	ND	ND
CHLOROETHANE	6 J	ND	21 J	7	ND
CHLOROFORM	ND	ND	18 J	ND	ND
CHLOROMETHANE	ND	ND	ND	ND	ND
CIS-1,2-DICHLOROETHENE	ND	ND	18 J	5 J	ND
CIS-1,3-DICHLOROPROPENE	ND	ND	14 J	ND	ND

APPENDIX C
QUARTERLY ANALYTICAL RESULTS (Continued)

Parcel E Nonstandard Data Gaps Investigation, Landfill Gas Characterization, Hunters Point Shipyard, San Francisco, California

Sample Location ID	GMP07	GMP07	GMP07	GMP07	GMP07A
Sample ID	GMP07SG001	GMP07SG002	GMP07SG003	GMP07SG004	GMP07ASG001
Sample Date	04/22/2002	04/22/2002	05/22/2002	07/31/2002	11/13/2002
EPA TO-14 VOA (µg/m3)					
CYCLOHEXANE	500	640 J	520 J	420	5
DIBROMOCHLOROMETHANE	ND	ND	30 J	ND	ND
DICHLORODIFLUOROMETHANE	480	550 J	750 J	330	110
ETHANOL	ND	ND	ND	ND	ND
ETHYLBENZENE	6 J	ND	18 J	ND	ND
HEPTANE	65	110 J	67 J	62	13
HEXACHLOROBUTADIENE	ND	51 J	54 J	ND	ND
HEXANE	360	460 J	360 J	460	50
ISOPROPYL ALCOHOL	ND	ND	ND	32	ND
M,P-XYLENES	12 J	20 J	ND	ND	ND
METHYLENE CHLORIDE	ND	ND	ND	ND	ND
O-XYLENE	7 J	ND	17 J	ND	ND
PROPYLENE	ND	ND	100 J	ND	130
STYRENE	ND	ND	ND	ND	ND
TERT-BUTYL METHYL ETHER	ND	ND	ND	ND	ND
TETRACHLOROETHENE	ND	ND	30 J	ND	ND
TETRAHYDROFURAN	ND	ND	ND	ND	ND
TOLUENE	ND	ND	ND	ND	ND
TRANS-1,2-DICHLOROETHENE	ND	ND	16 J	ND	ND
TRANS-1,3-DICHLOROPROPENE	ND	ND	12 J	ND	ND
TRICHLOROETHENE	ND	ND	23 J	ND	ND
TRICHLOROFLUOROMETHANE	ND	ND	27 J	ND	5 J
VINYL ACETATE	ND	ND	ND	ND	ND
VINYL CHLORIDE	ND	11 J	20 J	6	ND
EPA 3C Landfill Gas (%)					
CARBON DIOXIDE	13	14	17	18	8
CARBON MONOXIDE	ND	ND	ND	ND	ND
METHANE	57	64	51	36	ND
NITROGEN	26	19	31	46	88
OXYGEN	5	3	0.7	0.5	3
EPA 25C Total Nonmethane Organic Carbon (ppmv)					
METHANE	600,000 J	670,000 J	NA	NA	420
NONMETHANE ORGANIC CARBON	120	130	140	53	14

APPENDIX C
QUARTERLY ANALYTICAL RESULTS (Continued)

Parcel E Nonstandard Data Gaps Investigation, Landfill Gas Characterization, Hunters Point Shipyard, San Francisco, California

Sample Location ID	GMP08	GMP08	GMP08	GMP08A
Sample ID	GMP08SG001	GMP08SG002	GMP08SG003	GMP08ASG001
Sample Date	04/22/2002	05/22/2002	07/31/2002	11/13/2002
EPA TO-14 VOA (µg/m3)				
1,1,1-TRICHLOROETHANE	27 J	22 J	14	ND
1,1,2,2-TETRACHLOROETHANE	ND	ND	ND	ND
1,1,2-TRICHLORO-1,2,2-TRIFLUOROETHANE	ND	ND	ND	ND
1,1,2-TRICHLOROETHANE	ND	ND	ND	ND
1,1-DICHLOROETHANE	ND	290 J	410	ND
1,1-DICHLOROETHENE	ND	14 J	4 J	ND
1,2,4-TRICHLOROBENZENE	ND	35 J	ND	ND
1,2,4-TRIMETHYLBENZENE	15,000 J	13,000 J	17,000	22 J
1,2-DIBROMOETHANE	ND	14 J	ND	ND
1,2-DICHLORO-1,1,2,2-TETRAFLUOROETHANE	1,100 J	1,400 J	1,100	250 J
1,2-DICHLOROBENZENE	ND	ND	ND	ND
1,2-DICHLOROETHANE	ND	62 J	ND	ND
1,2-DICHLOROPROPANE	ND	ND	ND	ND
1,3,5-TRIMETHYLBENZENE	5,800 J	6,000 J	9,000	4 J
1,3-BUTADIENE	ND	ND	ND	ND
1,3-DICHLOROBENZENE	ND	ND	ND	ND
1,4-DICHLOROBENZENE	ND	ND	ND	ND
1,4-DIOXANE	ND	ND	ND	ND
2-BUTANONE	ND	ND	ND	ND
2-HEXANONE	ND	ND	ND	ND
4-ETHYLTOLUENE	2,200 J	2,500 J	1,300	3 J
4-METHYL-2-PENTANONE	ND	ND	ND	ND
ACETONE	ND	ND	ND	ND
BENZENE	240 J	230 J	320	ND
BENZYL CHLORIDE	ND	ND	ND	ND
BROMODICHLOROMETHANE	ND	ND	ND	ND
BROMOFORM	ND	ND	ND	ND
BROMOMETHANE	ND	11 J	ND	ND
CARBON DISULFIDE	18 J	18 J	ND	ND
CARBON TETRACHLORIDE	ND	13 J	ND	ND
CHLOROBENZENE	ND	ND	ND	ND
CHLOROETHANE	5,500 J	6,700 J	7,200	480 J
CHLOROFORM	ND	11 J	ND	ND
CHLOROMETHANE	ND	ND	ND	ND
CIS-1,2-DICHLOROETHENE	29 J	26 J	32	ND
CIS-1,3-DICHLOROPROPENE	ND	ND	ND	ND

APPENDIX C
QUARTERLY ANALYTICAL RESULTS (Continued)

Parcel E Nonstandard Data Gaps Investigation, Landfill Gas Characterization, Hunters Point Shipyard, San Francisco, California

Sample Location ID	GMP08	GMP08	GMP08	GMP08A
Sample ID	GMP08SG001	GMP08SG002	GMP08SG003	GMP08ASG001
Sample Date	04/22/2002	05/22/2002	07/31/2002	11/13/2002
EPA TO-14 VOA (µg/m3)				
CYCLOHEXANE	3,100 J	3,500 J	3,800	490 J
DIBROMOCHLOROMETHANE	ND	19 J	ND	ND
DICHLORODIFLUOROMETHANE	ND	38 J	ND	ND
ETHANOL	130 J	ND	ND	ND
ETHYLBENZENE	200 J	210 J	240	4 J
HEPTANE	1,200 J	1,300 J	1,100	14 J
HEXACHLOROBUTADIENE	72 J	41 J	ND	ND
HEXANE	8,400 J	7,500 J	15,000	1,400 J
ISOPROPYL ALCOHOL	ND	ND	72	ND
M,P-XYLENES	960 J	1,100 J	1,300	6 J
METHYLENE CHLORIDE	ND	ND	ND	ND
O-XYLENE	770 J	970 J	750	8 J
PROPYLENE	2,400 J	2,600 J	3,000	ND
STYRENE	ND	ND	ND	ND
TERT-BUTYL METHYL ETHER	ND	ND	ND	ND
TETRACHLOROETHENE	ND	19 J	ND	ND
TETRAHYDROFURAN	ND	ND	ND	ND
TOLUENE	67 J	ND	ND	ND
TRANS-1,2-DICHLOROETHENE	ND	18 J	19	ND
TRANS-1,3-DICHLOROPROPENE	ND	ND	ND	ND
TRICHLOROETHENE	39 J	18 J	9 J	ND
TRICHLOROFLUOROMETHANE	ND	17 J	ND	ND
VINYL ACETATE	ND	ND	ND	ND
VINYL CHLORIDE	130 J	150 J	150	ND
EPA 3C Landfill Gas (%)				
CARBON DIOXIDE	7	10	11	6
CARBON MONOXIDE	ND	ND	ND	ND
METHANE	64	71	69	7
NITROGEN	25	17	19	87
OXYGEN	3	0.4	0.5	1
EPA 25C Total Nonmethane Organic Carbon (ppmv)				
METHANE	670,000 J	NA	NA	NA
NONMETHANE ORGANIC CARBON	210	330	150	36

APPENDIX C
QUARTERLY ANALYTICAL RESULTS (Continued)

Parcel E Nonstandard Data Gaps Investigation, Landfill Gas Characterization, Hunters Point Shipyard, San Francisco, California

Sample Location ID	GMP11	GMP11	GMP11	GMP11
Sample ID	GMP11SG001	GMP11SG002	GMP11SG003	GMP11SG004
Sample Date	04/22/2002	05/22/2002	07/31/2002	07/31/2002
EPA TO-14 VOA (µg/m3)				
1,1,1-TRICHLOROETHANE	ND	ND	ND	ND
1,1,2,2-TETRACHLOROETHANE	ND	ND	ND	ND
1,1,2-TRICHLORO-1,2,2-TRIFLUOROETHANE	ND	ND	ND	ND
1,1,2-TRICHLOROETHANE	ND	ND	ND	ND
1,1-DICHLOROETHANE	ND	19 J	8	10
1,1-DICHLOROETHENE	ND	ND	ND	ND
1,2,4-TRICHLOROBENZENE	ND	ND	ND	ND
1,2,4-TRIMETHYLBENZENE	28 J	ND	ND	ND
1,2-DIBROMOETHANE	ND	ND	ND	ND
1,2-DICHLORO-1,1,2,2-TETRAFLUOROETHANE	300 J	430 J	260	310
1,2-DICHLOROBENZENE	ND	ND	ND	ND
1,2-DICHLOROETHANE	ND	ND	ND	ND
1,2-DICHLOROPROPANE	ND	ND	ND	ND
1,3,5-TRIMETHYLBENZENE	ND	ND	8 J	7 J
1,3-BUTADIENE	ND	ND	ND	ND
1,3-DICHLOROBENZENE	ND	ND	ND	ND
1,4-DICHLOROBENZENE	ND	ND	6 J	ND
1,4-DIOXANE	ND	ND	ND	ND
2-BUTANONE	ND	ND	ND	ND
2-HEXANONE	ND	ND	ND	ND
4-ETHYLTOLUENE	ND	ND	ND	ND
4-METHYL-2-PENTANONE	ND	ND	ND	ND
ACETONE	ND	ND	ND	ND
BENZENE	17 J	14 J	3 J	8 J
BENZYL CHLORIDE	ND	ND	ND	ND
BROMODICHLOROMETHANE	ND	ND	ND	ND
BROMOFORM	ND	ND	ND	ND
BROMOMETHANE	ND	ND	ND	ND
CARBON DISULFIDE	ND	10 J	ND	ND
CARBON TETRACHLORIDE	ND	ND	ND	ND
CHLOROBENZENE	400 J	190 J	ND	ND
CHLOROETHANE	16 J	32 J	16	20
CHLOROFORM	ND	ND	ND	ND
CHLOROMETHANE	ND	ND	ND	ND
CIS-1,2-DICHLOROETHENE	ND	21 J	12	14
CIS-1,3-DICHLOROPROPENE	ND	ND	ND	ND

APPENDIX C
QUARTERLY ANALYTICAL RESULTS (Continued)

Parcel E Nonstandard Data Gaps Investigation, Landfill Gas Characterization, Hunters Point Shipyard, San Francisco, California

Sample Location ID	GMP11	GMP11	GMP11	GMP11
Sample ID	GMP11SG001	GMP11SG002	GMP11SG003	GMP11SG004
Sample Date	04/22/2002	05/22/2002	07/31/2002	07/31/2002
EPA TO-14 VOA (µg/m3)				
CYCLOHEXANE	980 J	1,300 J	660	910 J
DIBROMOCHLOROMETHANE	ND	ND	ND	ND
DICHLORODIFLUOROMETHANE	ND	65 J	50	50
ETHANOL	ND	ND	ND	ND
ETHYLBENZENE	ND	20 J	ND	ND
HEPTANE	200 J	200 J	120	350 J
HEXACHLOROBUTADIENE	91 J	ND	ND	ND
HEXANE	920 J	1,100 J	750	790
ISOPROPYL ALCOHOL	ND	ND	ND	ND
M,P-XYLENES	46 J	ND	ND	ND
METHYLENE CHLORIDE	ND	ND	120	ND
O-XYLENE	21 J	18 J	ND	ND
PROPYLENE	250 J	61 J	42	40
STYRENE	ND	ND	ND	ND
TERT-BUTYL METHYL ETHER	ND	ND	ND	ND
TETRACHLOROETHENE	ND	ND	ND	ND
TETRAHYDROFURAN	ND	ND	ND	ND
TOLUENE	ND	ND	ND	ND
TRANS-1,2-DICHLOROETHENE	ND	ND	ND	ND
TRANS-1,3-DICHLOROPROPENE	ND	ND	ND	ND
TRICHLOROETHENE	ND	ND	ND	ND
TRICHLOROFLUOROMETHANE	ND	ND	ND	ND
VINYL ACETATE	ND	ND	ND	ND
VINYL CHLORIDE	ND	20 J	8	9
EPA 3C Landfill Gas (%)				
CARBON DIOXIDE	12 J	19	22	22
CARBON MONOXIDE	ND	ND	ND	ND
METHANE	53 J	65	57	57
NITROGEN	29 J	15	20	20
OXYGEN	5 J	0.5	0.5	0.5
EPA 25C Total Nonmethane Organic Carbon (ppmv)				
METHANE	580,000 J	NA	NA	NA
NONMETHANE ORGANIC CARBON	76	32	21	50

APPENDIX C
QUARTERLY ANALYTICAL RESULTS (Continued)

Parcel E Nonstandard Data Gaps Investigation, Landfill Gas Characterization, Hunters Point Shipyard, San Francisco, California

Sample Location ID	GMP12	GMP12	GMP12	GMP12	GMP12	GMP12	GMP13
Sample ID	GMP12SG001	GMP12SG002	GMP12SG003	GMP12MER001	GMP12SG004	GMP12SG005	GMP13SG001
Sample Date	04/22/2002	04/22/2002	05/22/2002	06/05/2002	07/31/2002	11/13/2002	06/05/2002
EPA TO-14 VOA (µg/m3)							
1,1,1-TRICHLOROETHANE	ND	ND	ND	NA	ND	ND	ND
1,1,2,2-TETRACHLOROETHANE	ND	ND	ND	NA	ND	ND	ND
1,1,2-TRICHLORO-1,2,2-TRIFLUOROETHANE	ND	ND	ND	NA	ND	ND	ND
1,1,2-TRICHLOROETHANE	ND	ND	ND	NA	ND	ND	ND
1,1-DICHLOROETHANE	ND	14 J	20 J	NA	ND	9 J	ND
1,1-DICHLOROETHENE	ND	ND	ND	NA	ND	ND	ND
1,2,4-TRICHLOROBENZENE	ND	ND	ND	NA	ND	ND	ND
1,2,4-TRIMETHYLBENZENE	ND	ND	19 J	NA	90	ND	ND
1,2-DIBROMOETHANE	ND	ND	ND	NA	ND	ND	ND
1,2-DICHLORO-1,1,2,2-TETRAFLUOROETHANE	300 J	280 J	260 J	NA	330	85 J	ND
1,2-DICHLOROBENZENE	ND	ND	ND	NA	6 J	4 J	ND
1,2-DICHLOROETHANE	ND	ND	10 J	NA	ND	ND	ND
1,2-DICHLOROPROPANE	ND	ND	ND	NA	ND	ND	ND
1,3,5-TRIMETHYLBENZENE	ND	ND	10 J	NA	34	5 J	ND
1,3-BUTADIENE	ND	ND	ND	NA	ND	ND	ND
1,3-DICHLOROBENZENE	ND	ND	ND	NA	ND	ND	ND
1,4-DICHLOROBENZENE	690 J	ND	670 J	NA	860	920 J	ND
1,4-DIOXANE	ND	ND	ND	NA	ND	ND	ND
2-BUTANONE	ND	ND	ND	NA	ND	ND	ND
2-HEXANONE	ND	ND	ND	NA	ND	ND	ND
4-ETHYLTOLUENE	ND	ND	ND	NA	ND	ND	ND
4-METHYL-2-PENTANONE	ND	ND	ND	NA	ND	ND	ND
ACETONE	ND	ND	ND	NA	ND	ND	ND
BENZENE	200 J	170 J	240 J	NA	290	78 J	ND
BENZYL CHLORIDE	ND	ND	ND	NA	ND	ND	ND
BROMODICHLOROMETHANE	ND	ND	ND	NA	ND	ND	ND
BROMOFORM	ND	ND	ND	NA	ND	ND	ND
BROMOMETHANE	ND	ND	ND	NA	ND	ND	ND
CARBON DISULFIDE	57 J	48 J	170 J	NA	ND	ND	ND
CARBON TETRACHLORIDE	ND	ND	ND	NA	ND	ND	ND
CHLOROBENZENE	530 J	ND	520 J	NA	850	520 J	ND
CHLOROETHANE	73 J	63 J	72 J	NA	78	10 J	ND
CHLOROFORM	ND	ND	ND	NA	ND	ND	36
CHLOROMETHANE	ND	ND	ND	NA	ND	ND	ND
CIS-1,2-DICHLOROETHENE	15 J	ND	15 J	NA	21	ND	ND
CIS-1,3-DICHLOROPROPENE	ND	ND	ND	NA	ND	ND	ND

APPENDIX C
QUARTERLY ANALYTICAL RESULTS (Continued)

Parcel E Nonstandard Data Gaps Investigation, Landfill Gas Characterization, Hunters Point Shipyard, San Francisco, California

Sample Location ID	GMP12	GMP12	GMP12	GMP12	GMP12	GMP12	GMP13
Sample ID	GMP12SG001	GMP12SG002	GMP12SG003	GMP12MER001	GMP12SG004	GMP12SG005	GMP13SG001
Sample Date	04/22/2002	04/22/2002	05/22/2002	06/05/2002	07/31/2002	11/13/2002	06/05/2002
EPA TO-14 VOA (µg/m3)							
CYCLOHEXANE	1,600 J	1,500 J	2,300 J	NA	870	ND	ND
DIBROMOCHLOROMETHANE	ND	ND	ND	NA	ND	ND	ND
DICHLORODIFLUOROMETHANE	350 J	310 J	ND	NA	60	200 J	ND
ETHANOL	270 J	210 J	ND	NA	ND	ND	ND
ETHYLBENZENE	34 J	32 J	57 J	NA	33	11 J	ND
HEPTANE	920 J	810 J	1,200 J	NA	130	9 J	ND
HEXACHLOROBUTADIENE	ND	ND	ND	NA	ND	ND	ND
HEXANE	2,000 J	1,700 J	2,400 J	NA	1,600	54 J	ND
ISOPROPYL ALCOHOL	66 J	77 J	ND	NA	ND	ND	6
M,P-XYLENES	43 J	39 J	ND	NA	ND	8 J	ND
METHYLENE CHLORIDE	ND	ND	ND	NA	ND	ND	ND
O-XYLENE	47 J	37 J	26 J	NA	ND	11 J	ND
PROPYLENE	1,200 J	1,100 J	260 J	NA	ND	98 J	ND
STYRENE	ND	ND	ND	NA	ND	ND	ND
T-BUTYL MERCAPTAN	NA	NA	NA	710 J	NA	NA	NA
TERT-BUTYL METHYL ETHER	ND	ND	ND	NA	ND	ND	ND
TETRACHLOROETHENE	ND	ND	ND	NA	ND	8 J	14
TETRAHYDROFURAN	ND	ND	ND	NA	ND	ND	ND
TETRAHYDROTHIOPHENE	NA	NA	NA	ND	NA	NA	NA
TOLUENE	ND	ND	ND	NA	ND	ND	ND
TRANS-1,2-DICHLOROETHENE	ND	ND	8 J	NA	8	ND	ND
TRANS-1,3-DICHLOROPROPENE	ND	ND	ND	NA	ND	ND	ND
TRICHLOROETHENE	ND	ND	12 J	NA	9 J	7 J	ND
TRICHLOROFLUOROMETHANE	ND	ND	ND	NA	ND	ND	ND
VINYL ACETATE	ND	ND	ND	NA	ND	ND	ND
VINYL CHLORIDE	20 J	18 J	25 J	NA	13	ND	ND
EPA 3C Landfill Gas (%)							
CARBON DIOXIDE	19	16	27	NA	27	12	0.6
CARBON MONOXIDE	ND	ND	ND	NA	ND	ND	ND
METHANE	52	44	60	NA	56	2	ND
NITROGEN	24	33	13	NA	16	84	82
OXYGEN	5	7	0.6	NA	1	2	18
EPA 25C Total Nonmethane Organic Carbon (ppmv)							
METHANE	540,000 J	470,000 J	NA	NA	NA	NA	ND

APPENDIX C
QUARTERLY ANALYTICAL RESULTS (Continued)

Parcel E Nonstandard Data Gaps Investigation, Landfill Gas Characterization, Hunters Point Shipyard, San Francisco, California

Sample Location ID	GMP12	GMP12	GMP12	GMP12	GMP12	GMP12	GMP13
Sample ID	GMP12SG001	GMP12SG002	GMP12SG003	GMP12MER001	GMP12SG004	GMP12SG005	GMP13SG001
Sample Date	04/22/2002	04/22/2002	05/22/2002	06/05/2002	07/31/2002	11/13/2002	06/05/2002
EPA 25C Total Nonethane Organic Carbon (ppmv)							
NONMETHANE ORGANIC CARBON	31	41	83	NA	28	50	ND

APPENDIX C
QUARTERLY ANALYTICAL RESULTS (Continued)

Parcel E Nonstandard Data Gaps Investigation, Landfill Gas Characterization, Hunters Point Shipyard, San Francisco, California

Sample Location ID	GMP14	GMP15	GMP16	GMP16	GMP17	GMP18	GMP19
Sample ID	GMP14SG001	GMP15SG001	GMP16SG001	GMP16SG002	GMP17SG001	GMP18SG001	GMP19SG001
Sample Date	06/05/2002	06/05/2002	06/05/2002	06/05/2002	06/05/2002	06/05/2002	06/05/2002
EPA TO-14 VOA (µg/m3)							
1,1,1-TRICHLOROETHANE	ND	ND	ND	ND	ND	ND	ND
1,1,2,2-TETRACHLOROETHANE	ND	ND	ND	ND	ND	ND	ND
1,1,2-TRICHLORO-1,2,2-TRIFLUOROETHANE	ND	ND	ND	ND	ND	ND	ND
1,1,2-TRICHLOROETHANE	ND	ND	ND	ND	ND	ND	ND
1,1-DICHLOROETHANE	ND	ND	ND	ND	ND	ND	ND
1,1-DICHLOROETHENE	ND	ND	ND	ND	ND	ND	ND
1,2,4-TRICHLOROBENZENE	ND	ND	ND	ND	ND	ND	7
1,2,4-TRIMETHYLBENZENE	39	7	12	22	ND	ND	26
1,2-DIBROMOETHANE	ND	ND	ND	ND	ND	ND	ND
1,2-DICHLORO-1,1,2,2-TETRAFLUOROETHANE	ND	ND	ND	ND	ND	ND	ND
1,2-DICHLOROBENZENE	ND	ND	ND	ND	ND	ND	ND
1,2-DICHLOROETHANE	ND	ND	ND	ND	ND	ND	ND
1,2-DICHLOROPROPANE	ND	ND	ND	ND	ND	ND	ND
1,3,5-TRIMETHYLBENZENE	ND	ND	5	9	ND	ND	5
1,3-BUTADIENE	ND	ND	ND	ND	ND	ND	11
1,3-DICHLOROBENZENE	ND	ND	ND	ND	ND	ND	ND
1,4-DICHLOROBENZENE	ND	ND	ND	6	ND	ND	ND
1,4-DIOXANE	ND	ND	ND	ND	ND	ND	ND
2-BUTANONE	ND	ND	ND	ND	ND	ND	ND
2-HEXANONE	ND	ND	ND	ND	ND	ND	ND
4-ETHYLTOLUENE	ND	ND	ND	6	ND	ND	ND
4-METHYL-2-PENTANONE	ND	ND	ND	ND	ND	ND	ND
ACETONE	ND	ND	ND	11	ND	ND	ND
BENZENE	ND	ND	28	28	ND	ND	14
BENZYL CHLORIDE	ND	ND	ND	ND	ND	ND	ND
BROMODICHLOROMETHANE	ND	ND	8	8	ND	ND	12
BROMOFORM	ND	ND	ND	ND	ND	ND	ND
BROMOMETHANE	ND	ND	ND	ND	ND	ND	ND
CARBON DISULFIDE	ND	ND	ND	ND	ND	ND	ND
CARBON TETRACHLORIDE	26	6	ND	ND	ND	ND	ND
CHLOROBENZENE	ND	ND	ND	ND	ND	ND	ND
CHLOROETHANE	ND	ND	ND	ND	ND	ND	ND
CHLOROFORM	54	16	6	5	ND	ND	10
CHLOROMETHANE	ND	ND	ND	ND	ND	ND	ND
CIS-1,2-DICHLOROETHENE	ND	ND	ND	ND	ND	ND	ND
CIS-1,3-DICHLOROPROPENE	ND	ND	ND	ND	ND	ND	ND

APPENDIX C
QUARTERLY ANALYTICAL RESULTS (Continued)

Parcel E Nonstandard Data Gaps Investigation, Landfill Gas Characterization, Hunters Point Shipyard, San Francisco, California

Sample Location ID	GMP14	GMP15	GMP16	GMP16	GMP17	GMP18	GMP19
Sample ID	GMP14SG001	GMP15SG001	GMP16SG001	GMP16SG002	GMP17SG001	GMP18SG001	GMP19SG001
Sample Date	06/05/2002	06/05/2002	06/05/2002	06/05/2002	06/05/2002	06/05/2002	06/05/2002
EPA TO-14 VOA (µg/m3)							
CYCLOHEXANE	ND	ND	ND	ND	ND	ND	ND
DIBROMOCHLOROMETHANE	ND	ND	11	13	ND	ND	ND
DICHLORODIFLUOROMETHANE	ND	9	6	9	ND	ND	5
ETHANOL	ND	ND	ND	ND	ND	ND	ND
ETHYLBENZENE	ND	ND	28	57	ND	ND	ND
HEPTANE	ND	ND	ND	ND	ND	ND	ND
HEXACHLOROBUTADIENE	ND	ND	ND	ND	ND	ND	21 J
HEXANE	ND	ND	ND	ND	ND	ND	ND
ISOPROPYL ALCOHOL	10	ND	ND	ND	ND	ND	ND
M,P-XYLENES	ND	ND	48	84	ND	ND	ND
METHYLENE CHLORIDE	ND	ND	ND	ND	ND	ND	ND
O-XYLENE	ND	8 J	22 J	35 J	ND	ND	11 J
PROPYLENE	ND	ND	ND	ND	ND	ND	37
STYRENE	ND	ND	5	8	ND	ND	ND
TERT-BUTYL METHYL ETHER	ND	ND	ND	ND	ND	ND	ND
TETRACHLOROETHENE	ND	12	ND	6	ND	ND	ND
TETRAHYDROFURAN	ND	ND	ND	3	ND	ND	ND
TOLUENE	ND	ND	ND	ND	ND	ND	ND
TRANS-1,2-DICHLOROETHENE	ND	ND	ND	ND	ND	ND	ND
TRANS-1,3-DICHLOROPROPENE	ND	ND	ND	ND	ND	ND	ND
TRICHLOROETHENE	ND	ND	ND	ND	ND	16	ND
TRICHLOROFLUOROMETHANE	6	5	6	6	ND	ND	ND
VINYL ACETATE	ND	ND	ND	ND	ND	ND	ND
VINYL CHLORIDE	ND	ND	ND	ND	ND	ND	ND
EPA 3C Landfill Gas (%)							
CARBON DIOXIDE	0.3	3	0.3	0.3	0.4	0.3	0.1 J
CARBON MONOXIDE	ND	ND	ND	ND	ND	ND	ND
METHANE	ND	ND	ND	ND	ND	ND	ND
NITROGEN	81	81	80	80	81	80	81
OXYGEN	18	16	20	18	18	19	19
EPA 25C Total Nonmethane Organic Carbon (ppmv)							
METHANE	ND	ND	ND	ND	ND	ND	ND
NONMETHANE ORGANIC CARBON	ND	ND	ND	ND	ND	ND	ND

APPENDIX C
QUARTERLY ANALYTICAL RESULTS (Continued)

Parcel E Nonstandard Data Gaps Investigation, Landfill Gas Characterization, Hunters Point Shipyard, San Francisco, California

Sample Location ID	GMP22	GMP23	GMP24	GMP25
Sample ID	GMP22003	GMP23001	GMP24SG001	GMP25SG001
Sample Date	11/13/2002	11/13/2002	11/13/2002	11/13/2002
EPA TO-14 VOA (µg/m3)				
1,1,1-TRICHLOROETHANE	18 J	17 J	ND	ND
1,1,2,2-TETRACHLOROETHANE	ND	ND	ND	ND
1,1,2-TRICHLORO-1,2,2-TRIFLUOROETHANE	32 J	30 J	ND	ND
1,1,2-TRICHLOROETHANE	22 J	ND	ND	ND
1,1-DICHLOROETHANE	ND	ND	62 J	49 J
1,1-DICHLOROETHENE	15 J	15 J	ND	ND
1,2,4-TRICHLOROBENZENE	ND	ND	ND	ND
1,2,4-TRIMETHYLBENZENE	320 J	250 J	600 J	ND
1,2-DIBROMOETHANE	20 J	21 J	ND	ND
1,2-DICHLORO-1,1,2,2-TETRAFLUOROETHANE	170 J	33 J	140 J	130 J
1,2-DICHLOROBENZENE	49 J	43 J	ND	ND
1,2-DICHLOROETHANE	ND	ND	ND	ND
1,2-DICHLOROPROPANE	ND	19 J	ND	ND
1,3,5-TRIMETHYLBENZENE	300 J	370 J	750 J	6 J
1,3-BUTADIENE	ND	ND	ND	ND
1,3-DICHLOROBENZENE	28 J	24 J	ND	ND
1,4-DICHLOROBENZENE	100 J	49 J	16 J	11 J
1,4-DIOXANE	ND	ND	ND	ND
2-BUTANONE	390 J	480 J	390 J	ND
2-HEXANONE	ND	ND	ND	ND
4-ETHYLTOLUENE	75 J	71 J	88 J	ND
4-METHYL-2-PENTANONE	ND	ND	ND	ND
ACETONE	890	5,100	3,100	ND
BENZENE	100 J	310 J	160 J	49 J
BENZYL CHLORIDE	ND	ND	ND	ND
BROMODICHLOROMETHANE	ND	ND	ND	ND
BROMOFORM	ND	58 J	ND	ND
BROMOMETHANE	29 J	17 J	ND	ND
CARBON DISULFIDE	250 J	1,000 J	350 J	26 J
CARBON TETRACHLORIDE	20 J	21 J	ND	ND
CHLOROBENZENE	ND	520 J	ND	140 J
CHLOROETHANE	56 J	72 J	270 J	160 J
CHLOROFORM	26 J	16 J	ND	ND
CHLOROMETHANE	380 J	800 J	270 J	ND
CIS-1,2-DICHLOROETHENE	27 J	36 J	48 J	10 J
CIS-1,3-DICHLOROPROPENE	13 J	15 J	ND	ND

APPENDIX C
QUARTERLY ANALYTICAL RESULTS (Continued)

Parcel E Nonstandard Data Gaps Investigation, Landfill Gas Characterization, Hunters Point Shipyard, San Francisco, California

Sample Location ID	GMP22	GMP23	GMP24	GMP25
Sample ID	GMP22003	GMP23001	GMP24SG001	GMP25SG001
Sample Date	11/13/2002	11/13/2002	11/13/2002	11/13/2002
EPA TO-14 VOA (µg/m3)				
CYCLOHEXANE	1,500 J	660 J	630 J	450 J
DIBROMOCHLOROMETHANE	ND	24 J	ND	ND
DICHLORODIFLUOROMETHANE	210 J	30 J	100 J	240 J
ETHANOL	ND	ND	ND	ND
ETHYLBENZENE	130 J	170 J	92 J	6 J
HEPTANE	920 J	1,200 J	500 J	12 J
HEXACHLOROBUTADIENE	38 J	ND	ND	ND
HEXANE	1,200 J	1,200 J	790 J	140 J
ISOPROPYL ALCOHOL	ND	ND	ND	ND
M,P-XYLENES	1,100 J	620 J	1,000 J	57 J
METHYLENE CHLORIDE	140 J	120 J	ND	ND
O-XYLENE	660 J	400 J	700 J	29 J
PROPYLENE	1,200	26,000	4,900	840 J
STYRENE	29 J	25 J	36 J	ND
TERT-BUTYL METHYL ETHER	ND	ND	ND	ND
TETRACHLOROETHENE	43 J	38 J	19 J	11 J
TETRAHYDROFURAN	ND	11 J	ND	ND
TOLUENE	77 J	96 J	61 J	ND
TRANS-1,2-DICHLOROETHENE	18 J	19 J	ND	ND
TRANS-1,3-DICHLOROPROPENE	13 J	13 J	ND	ND
TRICHLOROETHENE	39 J	36 J	19 J	8 J
TRICHLOROFLUOROMETHANE	19 J	18 J	9 J	ND
VINYL ACETATE	ND	ND	ND	ND
VINYL CHLORIDE	15 J	17 J	14 J	4 J
EPA 3C Landfill Gas (%)				
CARBON DIOXIDE	13	5	13	13
CARBON MONOXIDE	ND	ND	ND	ND
METHANE	0.7	0.6	2	0.6
NITROGEN	85	94	83	85
OXYGEN	1	1	2	2
EPA 25C Total Nonmethane Organic Carbon (ppmv)				
NONMETHANE ORGANIC CARBON	54	43	130	75

APPENDIX C
QUARTERLY ANALYTICAL RESULTS (Continued)

Parcel E Nonstandard Data Gaps Investigation, Landfill Gas Characterization, Hunters Point Shipyard, San Francisco, California

Sample Location ID	IR01MW16A	IR01MW16A	IR01MW16A	IR01MW16A	IR01MW18A	IR01MW18A	IR01MW18A
Sample ID	IR01MW16ASG001	IR01MW16ASG002	IR01MW16ASG003	IR01MW16ASG004	IR01MW18ASG001	IR01MW18ASG002	IR01MW18ASG003
Sample Date	04/22/2002	05/22/2002	08/01/2002	11/13/2002	04/22/2002	08/01/2002	11/13/2002
EPA TO-14 VOA (µg/m3)							
1,1,1-TRICHLOROETHANE	ND	ND	ND	ND	ND	ND	ND
1,1,2,2-TETRACHLOROETHANE	ND	ND	ND	ND	ND	ND	ND
1,1,2-TRICHLORO-1,2,2-TRIFLUOROETHANE	ND	ND	ND	ND	ND	8 J	ND
1,1,2-TRICHLOROETHANE	ND	ND	ND	ND	ND	ND	ND
1,1-DICHLOROETHANE	ND	ND	ND	ND	ND	10	ND
1,1-DICHLOROETHENE	ND	ND	ND	ND	ND	ND	ND
1,2,4-TRICHLOROBENZENE	ND	ND	40	ND	ND	ND	ND
1,2,4-TRIMETHYLBENZENE	180	260 J	550	70	110	170	500 J
1,2-DIBROMOETHANE	ND	ND	ND	ND	ND	ND	ND
1,2-DICHLORO-1,1,2,2-TETRAFLUOROETHANE	420	210 J	260	180	250	170	160 J
1,2-DICHLOROBENZENE	ND	ND	6 J	ND	ND	9 J	16 J
1,2-DICHLOROETHANE	ND	ND	7 J	ND	ND	ND	5 J
1,2-DICHLOROPROPANE	ND	ND	ND	ND	ND	4 J	ND
1,3,5-TRIMETHYLBENZENE	93	110 J	210	44	57 J	110	260 J
1,3-BUTADIENE	ND	ND	ND	ND	ND	ND	ND
1,3-DICHLOROBENZENE	70 J	51 J	86	45	52 J	37	45 J
1,4-DICHLOROBENZENE	210	150 J	280	130	490	370	460 J
1,4-DIOXANE	ND	ND	ND	ND	ND	ND	ND
2-BUTANONE	ND	ND	60	ND	ND	60	ND
2-HEXANONE	ND	ND	ND	ND	ND	ND	ND
4-ETHYLTOLUENE	ND	110 J	220	ND	ND	110	140 J
4-METHYL-2-PENTANONE	ND	ND	ND	ND	ND	ND	ND
ACETONE	ND	ND	210	ND	ND	2,000	46 J
BENZENE	410	680 J	300	160	62	110	140 J
BENZYL CHLORIDE	ND	ND	ND	ND	ND	ND	ND
BROMODICHLOROMETHANE	ND	ND	ND	ND	ND	ND	ND
BROMOFORM	ND	ND	ND	ND	ND	ND	ND
BROMOMETHANE	ND	ND	ND	ND	ND	ND	ND
CARBON DISULFIDE	ND	10 J	ND	17	ND	7	ND
CARBON TETRACHLORIDE	ND	ND	ND	ND	ND	ND	ND
CHLOROBENZENE	ND	ND	ND	ND	160	ND	270 J
CHLOROETHANE	140	110 J	130	120	140	80	83 J
CHLOROFORM	ND	ND	ND	ND	ND	ND	ND
CHLOROMETHANE	36	ND	ND	ND	ND	ND	ND
CIS-1,2-DICHLOROETHENE	50 J	60 J	48	32	ND	23	25 J
CIS-1,3-DICHLOROPROPENE	ND	ND	ND	ND	ND	ND	ND

APPENDIX C
QUARTERLY ANALYTICAL RESULTS (Continued)

Parcel E Nonstandard Data Gaps Investigation, Landfill Gas Characterization, Hunters Point Shipyard, San Francisco, California

Sample Location ID	IR01MW16A	IR01MW16A	IR01MW16A	IR01MW16A	IR01MW18A	IR01MW18A	IR01MW18A
Sample ID	IR01MW16ASG001	IR01MW16ASG002	IR01MW16ASG003	IR01MW16ASG004	IR01MW18ASG001	IR01MW18ASG002	IR01MW18ASG003
Sample Date	04/22/2002	05/22/2002	08/01/2002	11/13/2002	04/22/2002	08/01/2002	11/13/2002
EPA TO-14 VOA (µg/m3)							
CYCLOHEXANE	2,400	1,800 J	1,300	2,000 J	1,200	770	1,500 J
DIBROMOCHLOROMETHANE	ND	ND	ND	ND	ND	ND	ND
DICHLORODIFLUOROMETHANE	230	42 J	86	150	510	120	180 J
ETHANOL	ND	ND	ND	ND	ND	ND	ND
ETHYLBENZENE	83	180 J	390	53	68	100	130 J
HEPTANE	3,700	5,400 J	3,700	830	510	2,100	2,900
HEXACHLOROBUTADIENE	ND	ND	ND	ND	33 J	ND	ND
HEXANE	2,500	2,100 J	2,200	1,600	1,300	1,700	2,100
ISOPROPYL ALCOHOL	ND	ND	ND	ND	ND	300	ND
M,P-XYLENES	190	440 J	790	110	100	280	570 J
METHYLENE CHLORIDE	ND	39 J	ND	ND	ND	ND	ND
O-XYLENE	74	130 J	220	43	49 J	97	220 J
PROPYLENE	3,000	1,300 J	880	890	1,200	3,700	2,500
STYRENE	ND	ND	12	ND	ND	ND	ND
TERT-BUTYL METHYL ETHER	ND	ND	ND	ND	ND	ND	ND
TETRACHLOROETHENE	ND	30 J	90	21	ND	7 J	9 J
TETRAHYDROFURAN	ND	ND	ND	ND	ND	ND	ND
TOLUENE	110	230 J	320	57	49 J	200	100 J
TRANS-1,2-DICHLOROETHENE	41 J	48 J	34	27	ND	10	10 J
TRANS-1,3-DICHLOROPROPENE	ND	ND	ND	ND	ND	ND	ND
TRICHLOROETHENE	64 J	38 J	53	28	17 J	12	10 J
TRICHLOROFLUOROMETHANE	ND	ND	ND	ND	ND	ND	ND
VINYL ACETATE	ND	ND	ND	ND	ND	ND	ND
VINYL CHLORIDE	79	83 J	36	39	31 J	47	83 J
EPA 3C Landfill Gas (%)							
CARBON DIOXIDE	26	30	31	27	24	31	31
CARBON MONOXIDE	ND	ND	ND	ND	ND	ND	ND
METHANE	56	55	51	45	44	56	58
NITROGEN	17	14	17	26	32	12	10
OXYGEN	0.7	1	0.5	3	0.2	0.8	2
EPA 25C Total Nonmethane Organic Carbon (ppmv)							
METHANE	600,000 J	NA	NA	NA	450,000 J	NA	NA
NONMETHANE ORGANIC CARBON	51	93	27	68	44	61	150

APPENDIX C
QUARTERLY ANALYTICAL RESULTS (Continued)

Parcel E Nonstandard Data Gaps Investigation, Landfill Gas Characterization, Hunters Point Shipyard, San Francisco, California

Sample Location ID	IR01MW366A	IR01MW366A	IR01MW366A	IR01MW366A	IR01MW366A
Sample ID	IR01MW366ASG001	IR01MW366ASG002	IR01MW366ASG003	IR01MW366ASG004	IR01MW366ASG005
Sample Date	04/22/2002	05/22/2002	08/01/2002	08/01/2002	11/13/2002
EPA TO-14 VOA (µg/m3)					
1,1,1-TRICHLOROETHANE	ND	ND	8 J	8 J	ND
1,1,2,2-TETRACHLOROETHANE	ND	ND	ND	ND	ND
1,1,2-TRICHLORO-1,2,2-TRIFLUOROETHANE	ND	ND	ND	ND	ND
1,1,2-TRICHLOROETHANE	ND	ND	ND	ND	ND
1,1-DICHLOROETHANE	ND	ND	ND	5 J	ND
1,1-DICHLOROETHENE	ND	ND	ND	ND	ND
1,2,4-TRICHLOROBENZENE	ND	ND	ND	ND	ND
1,2,4-TRIMETHYLBENZENE	8 J	ND	65	ND	ND
1,2-DIBROMOETHANE	ND	ND	ND	ND	ND
1,2-DICHLORO-1,1,2,2-TETRAFLUOROETHANE	140	100	120	180	130
1,2-DICHLOROBENZENE	ND	ND	ND	ND	ND
1,2-DICHLOROETHANE	ND	ND	ND	ND	ND
1,2-DICHLOROPROPANE	ND	ND	ND	ND	ND
1,3,5-TRIMETHYLBENZENE	ND	ND	22	ND	ND
1,3-BUTADIENE	ND	ND	ND	ND	ND
1,3-DICHLOROBENZENE	ND	ND	ND	ND	ND
1,4-DICHLOROBENZENE	10 J	ND	ND	ND	ND
1,4-DIOXANE	ND	ND	ND	ND	ND
2-BUTANONE	ND	ND	ND	ND	ND
2-HEXANONE	ND	ND	ND	ND	ND
4-ETHYLTOLUENE	ND	ND	11	ND	ND
4-METHYL-2-PENTANONE	ND	ND	ND	ND	ND
ACETONE	ND	ND	130	94	ND
BENZENE	ND	ND	4 J	3 J	ND
BENZYL CHLORIDE	ND	ND	ND	ND	ND
BROMODICHLOROMETHANE	ND	ND	ND	ND	ND
BROMOFORM	ND	ND	ND	ND	ND
BROMOMETHANE	ND	ND	ND	ND	ND
CARBON DISULFIDE	5 J	ND	66	18	ND
CARBON TETRACHLORIDE	ND	ND	ND	ND	ND
CHLOROBENZENE	ND	ND	ND	ND	ND
CHLOROETHANE	ND	7	12	12	9
CHLOROFORM	34 J	12	13	20	ND
CHLOROMETHANE	ND	16	23	34	ND
CIS-1,2-DICHLOROETHENE	ND	ND	ND	ND	ND
CIS-1,3-DICHLOROPROPENE	ND	ND	ND	ND	ND

APPENDIX C
QUARTERLY ANALYTICAL RESULTS (Continued)

Parcel E Nonstandard Data Gaps Investigation, Landfill Gas Characterization, Hunters Point Shipyard, San Francisco, California

Sample Location ID	IR01MW366A	IR01MW366A	IR01MW366A	IR01MW366A	IR01MW366A
Sample ID	IR01MW366ASG001	IR01MW366ASG002	IR01MW366ASG003	IR01MW366ASG004	IR01MW366ASG005
Sample Date	04/22/2002	05/22/2002	08/01/2002	08/01/2002	11/13/2002
EPA TO-14 VOA (µg/m3)					
CYCLOHEXANE	ND	ND	14	7	6
DIBROMOCHLOROMETHANE	ND	ND	ND	ND	ND
DICHLORODIFLUOROMETHANE	ND	ND	ND	ND	ND
ETHANOL	ND	ND	74	ND	ND
ETHYLBENZENE	ND	ND	22	ND	ND
HEPTANE	17	ND	15	10	6 J
HEXACHLOROBUTADIENE	ND	ND	ND	ND	ND
HEXANE	33	ND	250	43	6
ISOPROPYL ALCOHOL	ND	ND	130	ND	ND
M,P-XYLENES	7 J	ND	70	7	3 J
METHYLENE CHLORIDE	ND	ND	280	ND	ND
O-XYLENE	ND	ND	27	4 J	ND
PROPYLENE	290	250	700	1,000	510
STYRENE	ND	ND	ND	ND	ND
TERT-BUTYL METHYL ETHER	ND	ND	ND	ND	ND
TETRACHLOROETHENE	ND	ND	ND	6 J	6 J
TETRAHYDROFURAN	ND	ND	ND	ND	ND
TOLUENE	ND	ND	54	4 J	ND
TRANS-1,2-DICHLOROETHENE	ND	ND	ND	ND	ND
TRANS-1,3-DICHLOROPROPENE	ND	ND	ND	ND	ND
TRICHLOROETHENE	13 J	9	14	18	13
TRICHLOROFLUOROMETHANE	140	130	170	200	170
VINYL ACETATE	ND	ND	ND	ND	ND
VINYL CHLORIDE	ND	ND	ND	ND	ND
EPA 3C Landfill Gas (%)					
CARBON DIOXIDE	9	7	8	13	9
CARBON MONOXIDE	ND	ND	ND	ND	ND
METHANE	19	11	12	21	12
NITROGEN	71	74	71	64	71
OXYGEN	ND	8	9	2	8
EPA 25C Total Nonmethane Organic Carbon (ppmv)					
METHANE	670,000 J	NA	NA	NA	NA
NONMETHANE ORGANIC CARBON	54	38	45	95	57

APPENDIX C
QUARTERLY ANALYTICAL RESULTS (Continued)

Parcel E Nonstandard Data Gaps Investigation, Landfill Gas Characterization, Hunters Point Shipyard, San Francisco, California

Sample Location ID	IR01MWI-5	IR01MWI-5	IR01MWI-5
Sample ID	IR01MWI-5SG001	IR01MWI-5SG002	IR01MWI-5SG003
Sample Date	04/22/2002	08/01/2002	11/13/2002
EPA TO-14 VOA (µg/m3)			
1,1,1-TRICHLOROETHANE	ND	ND	ND
1,1,2,2-TETRACHLOROETHANE	ND	ND	ND
1,1,2-TRICHLORO-1,2,2-TRIFLUOROETHANE	ND	ND	ND
1,1,2-TRICHLOROETHANE	ND	ND	ND
1,1-DICHLOROETHANE	ND	ND	ND
1,1-DICHLOROETHENE	ND	ND	ND
1,2,4-TRICHLOROBENZENE	22 J	ND	ND
1,2,4-TRIMETHYLBENZENE	770	150	220 J
1,2-DIBROMOETHANE	ND	ND	ND
1,2-DICHLORO-1,1,2,2-TETRAFLUOROETHANE	890	390	570 J
1,2-DICHLOROBENZENE	28 J	ND	5 J
1,2-DICHLOROETHANE	17 J	8	ND
1,2-DICHLOROPROPANE	ND	ND	ND
1,3,5-TRIMETHYLBENZENE	1,300	140	110 J
1,3-BUTADIENE	ND	ND	ND
1,3-DICHLOROBENZENE	38 J	29	86 J
1,4-DICHLOROBENZENE	360	290	790 J
1,4-DIOXANE	ND	ND	ND
2-BUTANONE	ND	ND	ND
2-HEXANONE	ND	ND	ND
4-ETHYLTOLUENE	650	53	49 J
4-METHYL-2-PENTANONE	ND	ND	ND
ACETONE	1,300	ND	310 J
BENZENE	670	680	910 J
BENZYL CHLORIDE	ND	ND	ND
BROMODICHLOROMETHANE	ND	ND	ND
BROMOFORM	ND	ND	ND
BROMOMETHANE	ND	ND	ND
CARBON DISULFIDE	ND	ND	ND
CARBON TETRACHLORIDE	ND	ND	ND
CHLOROBENZENE	390	710	940 J
CHLOROETHANE	78	21	ND
CHLOROFORM	ND	ND	ND
CHLOROMETHANE	ND	ND	ND
CIS-1,2-DICHLOROETHENE	14 J	13	16 J
CIS-1,3-DICHLOROPROPENE	ND	ND	ND

APPENDIX C
QUARTERLY ANALYTICAL RESULTS (Continued)

Parcel E Nonstandard Data Gaps Investigation, Landfill Gas Characterization, Hunters Point Shipyard, San Francisco, California

Sample Location ID	IR01MWI-5	IR01MWI-5	IR01MWI-5
Sample ID	IR01MWI-5SG001	IR01MWI-5SG002	IR01MWI-5SG003
Sample Date	04/22/2002	08/01/2002	11/13/2002
EPA TO-14 VOA (µg/m3)			
CYCLOHEXANE	3,700	1,300	1,100 J
DIBROMOCHLOROMETHANE	ND	ND	ND
DICHLORODIFLUOROMETHANE	260	47	21 J
ETHANOL	ND	ND	ND
ETHYLBENZENE	1,600	1,100	530 J
HEPTANE	11,000	5,400	2,900
HEXACHLOROBUTADIENE	61 J	ND	ND
HEXANE	3,200	4,300	2,400
ISOPROPYL ALCOHOL	ND	ND	ND
M,P-XYLENES	3,200	1,200	570 J
METHYLENE CHLORIDE	ND	ND	ND
O-XYLENE	530	210	130 J
PROPYLENE	3,700	81	1,800
STYRENE	ND	ND	ND
TERT-BUTYL METHYL ETHER	ND	ND	ND
TETRACHLOROETHENE	ND	ND	ND
TETRAHYDROFURAN	ND	ND	ND
TOLUENE	160	460	920 J
TRANS-1,2-DICHLOROETHENE	ND	ND	ND
TRANS-1,3-DICHLOROPROPENE	ND	ND	ND
TRICHLOROETHENE	ND	ND	ND
TRICHLOROFLUOROMETHANE	230	15	ND
VINYL ACETATE	ND	ND	ND
VINYL CHLORIDE	33 J	ND	ND
EPA 3C Landfill Gas (%)			
CARBON DIOXIDE	25	30	29
CARBON MONOXIDE	ND	ND	ND
METHANE	65	67	64
NITROGEN	9	3	3
OXYGEN	2	0.3	0.4
EPA 25C Total Nonmethane Organic Carbon (ppmv)			
METHANE	690,000 J	NA	NA
NONMETHANE ORGANIC CARBON	100	80	390

APPENDIX C
QUARTERLY ANALYTICAL RESULTS (Continued)

Parcel E Nonstandard Data Gaps Investigation, Landfill Gas Characterization, Hunters Point Shipyard, San Francisco, California

Notes:

%	Percent
µg/m3	Micrograms per cubic meter
EPA	U.S. Environmental Protection Agency
ID	Identification
J	Estimated value
NA	Not analyzed
ND	Not detected
ppmv	Parts per million by volume
TO-14	Toxic Organics-14
VOA	Volatile organic analysis

APPENDIX C
QUARTERLY ANALYTICAL RESULTS

Parcel E Nonstandard Data Gaps Investigation, Landfill Gas Characterization, Hunters Point Shipyard, San Francisco, California

Sample Location ID	830 CRAWL	830 CRAWL	830 CRAWL	830 CRAWL	AMBIENT AIR	EX1
Sample ID	SGCSSG001	SGCSSG002	SGCSSG003	SGCSSG004	GMPAA002	EX1002
Sample Date	04/03/2002	06/05/2002	08/01/2002	11/13/2002	05/22/2002	11/13/2002
EPA TO-14 VOA (µg/m3)						
1,1,1-TRICHLOROETHANE	ND	ND	ND	ND	ND	ND
1,1,2,2-TETRACHLOROETHANE	ND	ND	ND	ND	ND	ND
1,1,2-TRICHLORO-1,2,2-TRIFLUOROETHANE	ND	ND	ND	ND	20	ND
1,1,2-TRICHLOROETHANE	ND	ND	ND	ND	ND	180 J
1,1-DICHLOROETHANE	ND	ND	ND	ND	ND	ND
1,1-DICHLOROETHENE	ND	ND	ND	ND	ND	ND
1,2,4-TRICHLOROBENZENE	ND	ND	ND	ND	ND	ND
1,2,4-TRIMETHYLBENZENE	ND	ND	4 J	ND	ND	14 J
1,2-DIBROMOETHANE	ND	ND	ND	ND	ND	ND
1,2-DICHLORO-1,1,2,2-TETRAFLUOROETHANE	ND	ND	ND	ND	ND	51 J
1,2-DICHLOROBENZENE	ND	ND	ND	ND	ND	ND
1,2-DICHLOROETHANE	ND	ND	ND	ND	ND	ND
1,2-DICHLOROPROPANE	ND	ND	ND	ND	ND	ND
1,3,5-TRIMETHYLBENZENE	ND	ND	ND	ND	ND	9 J
1,3-BUTADIENE	ND	ND	ND	ND	ND	ND
1,3-DICHLOROBENZENE	ND	ND	ND	ND	ND	ND
1,4-DICHLOROBENZENE	ND	ND	ND	ND	ND	ND
1,4-DIOXANE	ND	ND	ND	ND	ND	ND
2-BUTANONE	ND	ND	ND	ND	ND	290 J
2-HEXANONE	ND	ND	ND	ND	ND	ND
4-ETHYLTOLUENE	ND	ND	ND	ND	ND	ND
4-METHYL-2-PENTANONE	ND	ND	ND	ND	ND	ND
ACETONE	ND	14	46	51	60	ND
BENZENE	ND	3	ND	ND	ND	28 J
BENZYL CHLORIDE	ND	ND	ND	ND	ND	ND
BROMODICHLOROMETHANE	ND	ND	ND	ND	ND	ND
BROMOFORM	ND	ND	ND	ND	ND	ND
BROMOMETHANE	ND	ND	ND	ND	ND	ND
CARBON DISULFIDE	ND	ND	16	ND	ND	5 J
CARBON TETRACHLORIDE	ND	ND	ND	ND	ND	ND
CHLOROBENZENE	ND	ND	ND	ND	ND	ND
CHLOROETHANE	ND	ND	ND	ND	ND	5 J
CHLOROFORM	ND	ND	ND	ND	ND	ND
CHLOROMETHANE	3 J	ND	2 J	ND	ND	ND
CIS-1,2-DICHLOROETHENE	ND	ND	ND	ND	ND	3 J
CIS-1,3-DICHLOROPROPENE	ND	ND	ND	ND	ND	ND

APPENDIX C
QUARTERLY ANALYTICAL RESULTS (Continued)

Parcel E Nonstandard Data Gaps Investigation, Landfill Gas Characterization, Hunters Point Shipyard, San Francisco, California

Sample Location ID	830 CRAWL	830 CRAWL	830 CRAWL	830 CRAWL	AMBIENT AIR	EX1
Sample ID	SGCSSG001	SGCSSG002	SGCSSG003	SGCSSG004	GMPAA002	EX1002
Sample Date	04/03/2002	06/05/2002	08/01/2002	11/13/2002	05/22/2002	11/13/2002
EPA TO-14 VOA (µg/m3)						
CYCLOHEXANE	ND	ND	9	ND	ND	30 J
DIBROMOCHLOROMETHANE	ND	ND	ND	ND	ND	ND
DICHLORODIFLUOROMETHANE	9 J	6	5 J	ND	ND	60 J
ETHANOL	6 J	3	14	ND	ND	ND
ETHYLBENZENE	ND	ND	ND	ND	ND	11 J
HEPTANE	ND	ND	ND	ND	ND	87 J
HEXACHLOROBUTADIENE	ND	ND	ND	ND	ND	11 J
HEXANE	NA	ND	3 J	ND	7	460 J
ISOPROPYL ALCOHOL	ND	ND	ND	ND	ND	ND
M,P-XYLENES	19	ND	10	6 J	10	21 J
METHYLENE CHLORIDE	ND	ND	ND	ND	ND	ND
N-HEXANE	9 J	NA	NA	NA	NA	NA
O-XYLENE	7 J	ND	ND	ND	ND	16 J
PROPYLENE	9	ND	5	ND	5	96 J
STYRENE	ND	ND	ND	ND	ND	ND
TERT-BUTYL METHYL ETHER	ND	ND	ND	ND	ND	ND
TETRACHLOROETHENE	12 J	ND	ND	ND	ND	6 J
TETRAHYDROFURAN	ND	ND	ND	ND	ND	4,500
TOLUENE	10 J	ND	8	ND	14	18 J
TRANS-1,2-DICHLOROETHENE	ND	ND	ND	ND	ND	ND
TRANS-1,3-DICHLOROPROPENE	ND	ND	ND	ND	ND	ND
TRICHLOROETHENE	ND	ND	ND	ND	ND	8 J
TRICHLOROFLUOROMETHANE	ND	ND	ND	ND	ND	ND
VINYL ACETATE	ND	ND	ND	ND	ND	ND
VINYL CHLORIDE	ND	ND	ND	ND	ND	2 J
EPA 3C Landfill Gas (%)						
CARBON DIOXIDE	0.1 J	ND	ND	ND	ND	NA
CARBON MONOXIDE	ND	ND	ND	ND	ND	NA
METHANE	0.1 J	ND	ND	ND	ND	NA
NITROGEN	81	80	81	82	80	NA
OXYGEN	20 J	19	18	18	20	NA
EPA 25C Total Nonmethane Organic Carbon (ppmv)						
METHANE	580	230	40	20	ND	NA
NONMETHANE ORGANIC CARBON	ND	ND	0.2	6	ND	NA

APPENDIX C
QUARTERLY ANALYTICAL RESULTS (Continued)

Parcel E Nonstandard Data Gaps Investigation, Landfill Gas Characterization, Hunters Point Shipyard, San Francisco, California

Sample Location ID	EX10	EX10	EX2	EX3	EX4	EX5	EX6
Sample ID	EX10002	EX10003	EX2001	EX3002	EX4001	EX5002	EX6001
Sample Date	11/13/2002	11/13/2002	11/13/2002	11/13/2002	11/13/2002	11/13/2002	11/13/2002
EPA TO-14 VOA (µg/m3)							
1,1,1-TRICHLOROETHANE	15	14	ND	18 J	17 J	18 J	40
1,1,2,2-TETRACHLOROETHANE	18	17	ND	ND	ND	ND	ND
1,1,2-TRICHLORO-1,2,2-TRIFLUOROETHANE	23	22	ND	29 J	32 J	30 J	58
1,1,2-TRICHLOROETHANE	13	13	ND	ND	19 J	18 J	43
1,1-DICHLOROETHANE	11	10	ND	ND	18 J	18 J	35
1,1-DICHLOROETHENE	10	8	ND	13 J	16 J	15 J	30
1,2,4-TRICHLOROBENZENE	ND	ND	ND	ND	ND	59 J	110
1,2,4-TRIMETHYLBENZENE	8	9	19	600 J	1,100 J	420 J	190
1,2-DIBROMOETHANE	19	16	ND	20 J	23 J	24 J	59
1,2-DICHLORO-1,1,2,2-TETRAFLUOROETHANE	32	29	14	41 J	39 J	41 J	63
1,2-DICHLOROBENZENE	9	9	ND	2,200 J	100 J	150 J	73
1,2-DICHLOROETHANE	11	10	ND	ND	ND	ND	29
1,2-DICHLOROPROPANE	14	11	ND	17 J	17 J	18 J	35
1,3,5-TRIMETHYLBENZENE	12	10	14	550 J	600 J	350 J	220
1,3-BUTADIENE	5	4	ND	ND	ND	ND	ND
1,3-DICHLOROBENZENE	ND	9	ND	92 J	32 J	27 J	57
1,4-DICHLOROBENZENE	11	10	21	490 J	92 J	98 J	67
1,4-DIOXANE	ND	ND	ND	ND	ND	ND	ND
2-BUTANONE	130	130	ND	280 J	630 J	1,000 J	150
2-HEXANONE	ND	ND	ND	ND	ND	ND	ND
4-ETHYLTOLUENE	8	7	ND	120 J	260 J	97 J	75
4-METHYL-2-PENTANONE	ND	ND	ND	ND	ND	ND	ND
ACETONE	ND	ND	ND	530 J	2,100	4,600	2,000
BENZENE	10	9	5	46 J	140 J	160 J	49
BENZYL CHLORIDE	ND	ND	ND	ND	ND	ND	ND
BROMODICHLOROMETHANE	18	16	21	61 J	ND	67 J	56
BROMOFORM	28	24	ND	ND	ND	ND	83
BROMOMETHANE	11	10	ND	51 J	21 J	47 J	43
CARBON DISULFIDE	18	21	ND	1,700 J	1,300 J	2,200	980
CARBON TETRACHLORIDE	19	17	ND	19 J	21 J	22 J	53
CHLOROBENZENE	13	11	ND	ND	ND	410 J	56
CHLOROETHANE	7	6	ND	83 J	64 J	100 J	48
CHLOROFORM	20	18	12	49 J	16 J	23 J	39
CHLOROMETHANE	ND	ND	ND	710 J	780 J	2,000	500
CIS-1,2-DICHLOROETHENE	10	9	ND	16 J	32 J	37 J	32
CIS-1,3-DICHLOROPROPENE	9	9	ND	12 J	15 J	15 J	31

APPENDIX C
QUARTERLY ANALYTICAL RESULTS (Continued)

Parcel E Nonstandard Data Gaps Investigation, Landfill Gas Characterization, Hunters Point Shipyard, San Francisco, California

Sample Location ID	EX10	EX10	EX2	EX3	EX4	EX5	EX6
Sample ID	EX10002	EX10003	EX2001	EX3002	EX4001	EX5002	EX6001
Sample Date	11/13/2002	11/13/2002	11/13/2002	11/13/2002	11/13/2002	11/13/2002	11/13/2002
EPA TO-14 VOA (µg/m3)							
CYCLOHEXANE	10	8	190	380 J	350 J	380 J	110
DIBROMOCHLOROMETHANE	21	18	ND	ND	26 J	28 J	64
DICHLORODIFLUOROMETHANE	17	15	44	80 J	70 J	70 J	180
ETHANOL	ND	ND	ND	100 J	ND	ND	ND
ETHYLBENZENE	10	9	8	190 J	480 J	250 J	79
HEPTANE	12	10	27	370 J	920 J	710 J	120
HEXACHLOROBUTADIENE	33	27	ND	ND	ND	44 J	180
HEXANE	16	16	140	460 J	790 J	610 J	140
ISOPROPYL ALCOHOL	ND	ND	ND	250 J	130 J	180 J	ND
M,P-XYLENES	21	20	35	1,300 J	1,400 J	1,100 J	240
METHYLENE CHLORIDE	64	71	ND	85 J	130 J	100 J	110
O-XYLENE	11	10	26	840 J	1,100 J	700 J	170
PROPYLENE	ND	ND	770	14,000	19,000	32,000	4,900
STYRENE	9	8	ND	ND	ND	36 J	43
TERT-BUTYL METHYL ETHER	ND	6	ND	ND	ND	ND	40
TETRACHLOROETHENE	18	17	ND	39 J	39 J	110 J	63
TETRAHYDROFURAN	10,000	9,300	600	1,100	1,100	1,400	33
TOLUENE	19	19	ND	100 J	310 J	120 J	61
TRANS-1,2-DICHLOROETHENE	11	10	ND	14 J	16 J	18 J	28
TRANS-1,3-DICHLOROPROPENE	8	7	ND	11 J	7 J	14 J	27
TRICHLOROETHENE	15	14	ND	29 J	34 J	66 J	47
TRICHLOROFLUOROMETHANE	19	18	ND	19 J	20 J	21 J	47
VINYL ACETATE	ND	ND	ND	ND	ND	ND	ND
VINYL CHLORIDE	7	6	ND	10 J	15 J	16 J	22

APPENDIX C
QUARTERLY ANALYTICAL RESULTS (Continued)

Parcel E Nonstandard Data Gaps Investigation, Landfill Gas Characterization, Hunters Point Shipyard, San Francisco, California

Sample Location ID	FB	SG01	SG01	SG01C	SG01C	SG01C
Sample ID	FB001	SG01SG001	SG01SG002	SG01SG003	SG01SG004	SG01SG005
Sample Date	11/13/2002	03/27/2002	03/27/2002	04/02/2002	04/02/2002	04/02/2002
EPA TO-14 VOA (µg/m3)						
1,1,1-TRICHLOROETHANE	ND	ND	ND	5 J	ND	ND
1,1,2,2-TETRACHLOROETHANE	ND	ND	ND	ND	ND	ND
1,1,2-TRICHLORO-1,2,2-TRIFLUOROETHANE	ND	ND	7 J	13 J	ND	ND
1,1,2-TRICHLOROETHANE	ND	ND	ND	ND	ND	ND
1,1-DICHLOROETHANE	ND	62	41 J	ND	ND	ND
1,1-DICHLOROETHENE	ND	ND	ND	ND	ND	ND
1,2,4-TRICHLOROBENZENE	ND	ND	ND	ND	ND	ND
1,2,4-TRIMETHYLBENZENE	ND	4,500	ND	450 J	410	590 J
1,2-DIBROMOETHANE	ND	ND	ND	ND	ND	ND
1,2-DICHLORO-1,1,2,2-TETRAFLUOROETHANE	ND	450	230	250 J	110	240 J
1,2-DICHLOROBENZENE	ND	42 J	ND	51 J	37	80 J
1,2-DICHLOROETHANE	ND	23 J	13 J	10 J	4 J	ND
1,2-DICHLOROPROPANE	ND	5 J	6 J	ND	ND	ND
1,3,5-TRIMETHYLBENZENE	ND	1,100	ND	530 J	380	740 J
1,3-BUTADIENE	ND	ND	ND	ND	ND	ND
1,3-DICHLOROBENZENE	ND	42 J	24 J	20 J	5 J	9 J
1,4-DICHLOROBENZENE	ND	880	510	120 J	57	150 J
1,4-DIOXANE	ND	ND	ND	ND	ND	ND
2-BUTANONE	ND	ND	ND	66 J	65	170 J
2-HEXANONE	ND	ND	ND	ND	ND	ND
4-ETHYLTOLUENE	ND	830	ND	130 J	83	160 J
4-METHYL-2-PENTANONE	ND	ND	ND	ND	ND	ND
ACETONE	17	ND	ND	860 J	760	560 J
BENZENE	ND	760	440	34 J	17	39 J
BENZYL CHLORIDE	ND	ND	ND	ND	ND	ND
BROMODICHLOROMETHANE	ND	ND	ND	ND	ND	ND
BROMOFORM	ND	ND	ND	23 J	ND	ND
BROMOMETHANE	ND	ND	ND	18 J	ND	ND
CARBON DISULFIDE	ND	9 J	20 J	480 J	78	45 J
CARBON TETRACHLORIDE	ND	ND	ND	ND	640	ND
CHLOROBENZENE	ND	1,800	1,600	ND	ND	ND
CHLOROETHANE	ND	270	170	50 J	15	39 J
CHLOROFORM	ND	ND	4 J	ND	ND	ND
CHLOROMETHANE	2	10 J	ND	44 J	16	31 J
CIS-1,2-DICHLOROETHENE	ND	24 J	12 J	12 J	4 J	10 J
CIS-1,3-DICHLOROPROPENE	ND	ND	ND	ND	ND	ND

APPENDIX C
QUARTERLY ANALYTICAL RESULTS (Continued)

Parcel E Nonstandard Data Gaps Investigation, Landfill Gas Characterization, Hunters Point Shipyard, San Francisco, California

Sample Location ID	FB	SG01	SG01	SG01C	SG01C	SG01C
Sample ID	FB001	SG01SG001	SG01SG002	SG01SG003	SG01SG004	SG01SG005
Sample Date	11/13/2002	03/27/2002	03/27/2002	04/02/2002	04/02/2002	04/02/2002
EPA TO-14 VOA (µg/m3)						
CYCLOHEXANE	ND	1,800	1,700	780 J	ND	650 J
DIBROMOCHLOROMETHANE	ND	ND	ND	ND	ND	ND
DICHLORODIFLUOROMETHANE	ND	950	340	71 J	100	220 J
ETHANOL	19	ND	ND	500 J	ND	ND
ETHYLBENZENE	ND	480	53 J	140 J	48	99 J
HEPTANE	ND	2,200	690	260 J	170	320 J
HEXACHLOROBUTADIENE	ND	ND	ND	ND	ND	ND
HEXANE	ND	NA	NA	NA	NA	NA
ISOPROPYL ALCOHOL	ND	3 J	2 J	ND	ND	ND
M,P-XYLENES	ND	1,000	230	1,200 J	520	1,200 J
METHYLENE CHLORIDE	ND	ND	ND	ND	560	ND
N-HEXANE	NA	2,700	2,200	1,000 J	780	730 J
O-XYLENE	ND	320	53 J	920 J	370	860 J
PROPYLENE	2	3,600	1,700	360 J	610	530 J
STYRENE	ND	4 J	ND	14 J	10	28 J
TERT-BUTYL METHYL ETHER	ND	ND	ND	ND	ND	ND
TETRACHLOROETHENE	ND	8 J	14 J	16 J	6 J	9 J
TETRAHYDROFURAN	ND	13 J	7 J	4 J	ND	ND
TOLUENE	3	96	ND	66 J	210	81 J
TRANS-1,2-DICHLOROETHENE	ND	80	44 J	10 J	ND	ND
TRANS-1,3-DICHLOROPROPENE	ND	ND	ND	ND	ND	ND
TRICHLOROETHENE	ND	ND	11 J	17 J	9	15 J
TRICHLOROFLUOROMETHANE	ND	ND	ND	5 J	6 J	ND
VINYL ACETATE	ND	ND	ND	ND	ND	ND
VINYL CHLORIDE	ND	290	99	6 J	3 J	9 J
EPA 3C Landfill Gas (%)						
CARBON DIOXIDE	NA	27 J	26 J	21 J	ND	ND
CARBON MONOXIDE	NA	ND	ND	ND	ND	ND
METHANE	NA	63 J	56 J	ND	ND	ND
NITROGEN	NA	9	18	31	59	43
OXYGEN	NA	1	0.8	3	12	5
EPA 25C Total Non-Methane Organic Carbon (ppmv)						
METHANE	NA	630,000 J	560,000 J	460,000 J	220,000 J	380,000 J
NON-METHANE ORGANIC CARBON	NA	48	46	41	27	40

APPENDIX C
QUARTERLY ANALYTICAL RESULTS (Continued)

Parcel E Nonstandard Data Gaps Investigation, Landfill Gas Characterization, Hunters Point Shipyard, San Francisco, California

Sample Location ID	SG01D	SG01D	SG01E	SG02	SG02	SG02A	SG02A
Sample ID	SG01SG006	SG01SG007	SG01SG008	SG02SG008	SG02SG009	SG02SG001	SG02SG002
Sample Date	04/02/2002	04/02/2002	04/04/2002	04/04/2002	04/04/2002	03/28/2002	03/28/2002
EPA TO-14 VOA (µg/m3)							
1,1,1-TRICHLOROETHANE	ND	ND	ND	ND	ND	ND	ND
1,1,2,2-TETRACHLOROETHANE	ND	ND	ND	ND	ND	ND	ND
1,1,2-TRICHLORO-1,2,2-TRIFLUOROETHANE	9 J	ND	ND	ND	ND	7 J	6 J
1,1,2-TRICHLOROETHANE	ND	ND	ND	ND	ND	5 J	ND
1,1-DICHLOROETHANE	5 J	ND	ND	ND	17 J	37	39
1,1-DICHLOROETHENE	3 J	ND	ND	ND	ND	4 J	3 J
1,2,4-TRICHLOROBENZENE	140 J	22 J	ND	ND	ND	23 J	23 J
1,2,4-TRIMETHYLBENZENE	28,000 J	510	ND	77 J	96 J	160	12 J
1,2-DIBROMOETHANE	6 J	ND	ND	ND	ND	ND	ND
1,2-DICHLORO-1,1,2,2-TETRAFLUOROETHANE	630 J	240	ND	610 J	700 J	230	270
1,2-DICHLOROBENZENE	16 J	9 J	ND	ND	ND	33 J	24 J
1,2-DICHLOROETHANE	5 J	ND	ND	ND	10 J	14 J	12 J
1,2-DICHLOROPROPANE	ND	ND	ND	ND	ND	6 J	6 J
1,3,5-TRIMETHYLBENZENE	18,000 J	250	ND	30 J	33 J	33 J	15 J
1,3-BUTADIENE	5 J	3 J	17	ND	ND	ND	ND
1,3-DICHLOROBENZENE	ND	5 J	ND	ND	ND	70	48
1,4-DICHLOROBENZENE	10 J	35 J	ND	23 J	29 J	480	350
1,4-DIOXANE	ND	4 J	ND	ND	ND	ND	ND
2-BUTANONE	ND	ND	50	ND	ND	130	ND
2-HEXANONE	ND	ND	13	ND	ND	ND	ND
4-ETHYLTOLUENE	9,200 J	110	ND	ND	ND	30	5 J
4-METHYL-2-PENTANONE	ND	ND	5 J	ND	ND	490	ND
ACETONE	4,400 J	ND	150	ND	ND	110	ND
BENZENE	32 J	ND	9	85 J	96 J	140	110
BENZYL CHLORIDE	ND	ND	ND	ND	ND	ND	ND
BROMODICHLOROMETHANE	ND	ND	ND	ND	ND	ND	ND
BROMOFORM	ND	ND	ND	ND	ND	ND	ND
BROMOMETHANE	52 J	3 J	ND	ND	ND	3 J	ND
CARBON DISULFIDE	33 J	10 J	4 J	ND	ND	37	6 J
CARBON TETRACHLORIDE	ND	ND	ND	ND	ND	ND	ND
CHLOROBENZENE	ND	ND	ND	ND	310 J	920	960
CHLOROETHANE	74 J	19 J	ND	180 J	200 J	110	110
CHLOROFORM	9 J	4 J	5 J	ND	ND	ND	ND
CHLOROMETHANE	250 J	11 J	2 J	ND	ND	ND	ND
CIS-1,2-DICHLOROETHENE	5 J	4 J	ND	36 J	38 J	12 J	14 J
CIS-1,3-DICHLOROPROPENE	ND	ND	ND	ND	ND	ND	ND

APPENDIX C
QUARTERLY ANALYTICAL RESULTS (Continued)

Parcel E Nonstandard Data Gaps Investigation, Landfill Gas Characterization, Hunters Point Shipyard, San Francisco, California

Sample Location ID	SG01D	SG01D	SG01E	SG02	SG02	SG02A	SG02A
Sample ID	SG01SG006	SG01SG007	SG01SG008	SG02SG008	SG02SG009	SG02SG001	SG02SG002
Sample Date	04/02/2002	04/02/2002	04/04/2002	04/04/2002	04/04/2002	03/28/2002	03/28/2002
EPA TO-14 VOA (µg/m3)							
CYCLOHEXANE	430 J	150	6	1,600 J	1,800 J	1,700	1,800
DIBROMOCHLOROMETHANE	ND	ND	ND	ND	ND	ND	ND
DICHLORODIFLUOROMETHANE	330 J	110	4 J	260 J	290 J	350	350
ETHANOL	130 J	ND	3	ND	ND	32	55
ETHYLBENZENE	28,000 J	260	3 J	28 J	30 J	22 J	22 J
HEPTANE	1,900 J	20 J	11	1,000 J	1,200 J	1,100	900
HEXACHLOROBUTADIENE	27 J	36 J	ND	ND	ND	ND	ND
ISOPROPYL ALCOHOL	ND	ND	ND	ND	ND	ND	7 J
M,P-XYLENES	57,000 J	1,200	5 J	31 J	41 J	27 J	21 J
METHYLENE CHLORIDE	ND	ND	ND	ND	ND	ND	ND
N-HEXANE	270 J	72	22	1,600 J	2,000 J	2,100	2,200
O-XYLENE	37,000 J	670	ND	23 J	36 J	20 J	8 J
PROPYLENE	2,200 J	600	250	2,400 J	2,200 J	1,200	1,300
STYRENE	5 J	ND	ND	ND	ND	ND	ND
TERT-BUTYL METHYL ETHER	ND	ND	ND	ND	ND	ND	ND
TETRACHLOROETHENE	22 J	ND	ND	47 J	52 J	5 J	6 J
TETRAHYDROFURAN	4 J	ND	ND	ND	ND	2 J	ND
TOLUENE	13,000 J	42 J	11	ND	ND	ND	ND
TRANS-1,2-DICHLOROETHENE	ND	ND	ND	10 J	10 J	11 J	12 J
TRANS-1,3-DICHLOROPROPENE	3 J	ND	ND	ND	ND	ND	ND
TRICHLOROETHENE	12 J	7 J	ND	21 J	25 J	10 J	9 J
TRICHLOROFLUOROMETHANE	ND	ND	ND	ND	ND	ND	ND
VINYL ACETATE	ND	ND	ND	ND	ND	ND	ND
VINYL CHLORIDE	5 J	ND	ND	33 J	37 J	43	42
EPA 3C Landfill Gas (%)							
CARBON DIOXIDE	17	ND	0.09 J	19	20 J	23	23 J
CARBON MONOXIDE	ND	ND	ND	ND	ND	ND	ND
METHANE	35	ND	ND	58 J	51 J	50	54 J
NITROGEN	45	49	80	19 J	12 J	25	21
OXYGEN	2	5	19 J	4	17 J	2	2
EPA 25C Total Non-Methane Organic Carbon (ppmv)							
METHANE	360,000 J	320,000 J	26	580,000 J	510,000 J	500,000 J	550,000 J
NON-METHANE ORGANIC CARBON	28	26	ND	81	84	ND	56

APPENDIX C
QUARTERLY ANALYTICAL RESULTS (Continued)

Parcel E Nonstandard Data Gaps Investigation, Landfill Gas Characterization, Hunters Point Shipyard, San Francisco, California

Sample Location ID	SG02B	SG02C	SG02C	SG02E	SG02E	SG02G	SG02G
Sample ID	SG02SG003	SG02SG004	SG02SG005	SG02SG006	SG02SG007	SG02SG011	SG02SG012
Sample Date	04/02/2002	04/02/2002	04/02/2002	04/02/2002	04/02/2002	04/05/2002	04/05/2002
EPA TO-14 VOA (µg/m3)							
1,1,1-TRICHLOROETHANE	ND	ND	ND	ND	ND	ND	ND
1,1,2,2-TETRACHLOROETHANE	ND	ND	ND	ND	ND	ND	ND
1,1,2-TRICHLORO-1,2,2-TRIFLUOROETHANE	ND	ND	ND	ND	14 J	ND	ND
1,1,2-TRICHLOROETHANE	ND	ND	ND	ND	ND	ND	ND
1,1-DICHLOROETHANE	ND	ND	ND	9 J	ND	ND	ND
1,1-DICHLOROETHENE	ND	ND	ND	ND	ND	ND	ND
1,2,4-TRICHLOROBENZENE	11 J	ND	ND	ND	ND	ND	ND
1,2,4-TRIMETHYLBENZENE	21	ND	ND	680 J	1,700 J	ND	ND
1,2-DIBROMOETHANE	ND	ND	ND	ND	ND	ND	ND
1,2-DICHLORO-1,1,2,2-TETRAFLUOROETHANE	ND	ND	43	480 J	320 J	ND	ND
1,2-DICHLOROBENZENE	ND	ND	ND	150 J	ND	ND	ND
1,2-DICHLOROETHANE	ND	ND	ND	14 J	8 J	ND	ND
1,2-DICHLOROPROPANE	ND	ND	ND	ND	ND	ND	ND
1,3,5-TRIMETHYLBENZENE	10	ND	ND	940 J	2,300 J	ND	ND
1,3-BUTADIENE	3 J	7 J	ND	ND	ND	4	4
1,3-DICHLOROBENZENE	ND	ND	ND	11 J	ND	ND	ND
1,4-DICHLOROBENZENE	ND	ND	ND	130 J	34 J	ND	ND
1,4-DIOXANE	ND	ND	ND	ND	ND	ND	ND
2-BUTANONE	ND	ND	ND	ND	ND	ND	ND
2-HEXANONE	ND	ND	ND	ND	ND	ND	ND
4-ETHYLTOLUENE	5 J	ND	ND	150 J	450 J	ND	ND
4-METHYL-2-PENTANONE	ND	ND	ND	120 J	ND	ND	ND
ACETONE	ND	ND	63	2,100 J	470 J	ND	ND
BENZENE	ND	ND	3 J	95 J	86 J	ND	ND
BENZYL CHLORIDE	ND	ND	ND	ND	ND	ND	ND
BROMODICHLOROMETHANE	ND	ND	ND	ND	ND	ND	ND
BROMOFORM	ND	ND	ND	ND	ND	ND	ND
BROMOMETHANE	ND	ND	ND	6 J	ND	ND	ND
CARBON DISULFIDE	ND	37	3 J	17 J	15 J	ND	ND
CARBON TETRACHLORIDE	ND	ND	ND	ND	ND	ND	ND
CHLOROBENZENE	ND	ND	ND	ND	ND	ND	ND
CHLOROETHANE	ND	ND	ND	60 J	33 J	ND	ND
CHLOROFORM	ND	ND	ND	ND	ND	22	ND
CHLOROMETHANE	ND	ND	3 J	27 J	4 J	ND	ND
CIS-1,2-DICHLOROETHENE	ND	ND	ND	18 J	13 J	ND	ND
CIS-1,3-DICHLOROPROPENE	ND	ND	ND	ND	ND	ND	ND

APPENDIX C
QUARTERLY ANALYTICAL RESULTS (Continued)

Parcel E Nonstandard Data Gaps Investigation, Landfill Gas Characterization, Hunters Point Shipyard, San Francisco, California

Sample Location ID	SG02B	SG02C	SG02C	SG02E	SG02E	SG02G	SG02G
Sample ID	SG02SG003	SG02SG004	SG02SG005	SG02SG006	SG02SG007	SG02SG011	SG02SG012
Sample Date	04/02/2002	04/02/2002	04/02/2002	04/02/2002	04/02/2002	04/05/2002	04/05/2002
EPA TO-14 VOA (µg/m3)							
CYCLOHEXANE	ND	6 J	6	880 J	660 J	ND	ND
DIBROMOCHLOROMETHANE	ND	ND	ND	ND	ND	ND	ND
DICHLORODIFLUOROMETHANE	ND	ND	ND	270 J	180 J	ND	ND
ETHANOL	ND	ND	8	15 J	24 J	ND	ND
ETHYLBENZENE	7	ND	ND	410 J	760 J	ND	ND
HEPTANE	ND	10 J	ND	1,000 J	960 J	ND	ND
HEXACHLOROBUTADIENE	14 J	ND	ND	ND	ND	ND	ND
ISOPROPYL ALCOHOL	4	8 J	9	ND	ND	ND	ND
M,P-XYLENES	ND	ND	ND	2,100 J	2,800 J	ND	ND
METHYLENE CHLORIDE	ND	57	ND	ND	180 J	ND	ND
N-HEXANE	ND	58	9	1,500 J	1,200 J	ND	ND
O-XYLENE	ND	ND	ND	1,600 J	2,400 J	ND	ND
PROPYLENE	22	84	16	2,300 J	2,100 J	30	39
STYRENE	ND	ND	ND	15 J	25 J	ND	ND
TERT-BUTYL METHYL ETHER	ND	ND	ND	ND	ND	ND	ND
TETRACHLOROETHENE	ND	ND	ND	38 J	210 J	ND	ND
TETRAHYDROFURAN	ND	ND	ND	ND	ND	ND	ND
TOLUENE	ND	ND	9	250 J	350 J	ND	ND
TRANS-1,2-DICHLOROETHENE	ND	ND	ND	ND	ND	ND	ND
TRANS-1,3-DICHLOROPROPENE	ND	ND	ND	ND	ND	ND	ND
TRICHLOROETHENE	ND	ND	ND	31 J	19 J	ND	ND
TRICHLOROFLUOROMETHANE	ND	ND	ND	ND	ND	ND	ND
VINYL ACETATE	ND	ND	ND	ND	ND	ND	ND
VINYL CHLORIDE	ND	ND	ND	16 J	9 J	ND	ND
EPA 3C Landfill Gas (%)							
CARBON DIOXIDE	ND	ND	3	21	17	2	1
CARBON MONOXIDE	ND	ND	0.05 J	ND	ND	ND	ND
METHANE	ND	ND	2	52 J	45	ND	ND
NITROGEN	80	77	82	24	33	80	84
OXYGEN	20 J	22	12	2	5	16 J	12
EPA 25C Total Nonmethane Organic Carbon (ppmv)							
METHANE	230	410	16,000 J	520,000 J	550,000 J	ND	ND
NONMETHANE ORGANIC CARBON	ND	ND	ND	66	56	ND	ND

APPENDIX C
QUARTERLY ANALYTICAL RESULTS (Continued)

Parcel E Nonstandard Data Gaps Investigation, Landfill Gas Characterization, Hunters Point Shipyard, San Francisco, California

Sample Location ID	SG03	SG03	SG03A	SG03A	SG03C	SG03C
Sample ID	SG03SG005	SG03SG006	SG03SG001	SG03SG002	SG03SG003	SG03SG004
Sample Date	04/04/2002	04/04/2002	04/02/2002	04/02/2002	04/03/2002	04/03/2002
EPA TO-14 VOA (µg/m3)						
1,1,1-TRICHLOROETHANE	ND	ND	ND	ND	ND	ND
1,1,2,2-TETRACHLOROETHANE	ND	ND	ND	ND	ND	ND
1,1,2-TRICHLORO-1,2,2-TRIFLUOROETHANE	ND	ND	ND	ND	ND	ND
1,1,2-TRICHLOROETHANE	ND	ND	ND	ND	ND	ND
1,1-DICHLOROETHANE	10 J	15 J	ND	ND	ND	ND
1,1-DICHLOROETHENE	ND	ND	ND	3 J	ND	ND
1,2,4-TRICHLOROBENZENE	ND	170 J	ND	2,700 J	ND	ND
1,2,4-TRIMETHYLBENZENE	ND	190 J	440 J	3,800 J	ND	13 J
1,2-DIBROMOETHANE	ND	ND	ND	15 J	ND	ND
1,2-DICHLORO-1,1,2,2-TETRAFLUOROETHANE	520 J	510 J	510 J	660 J	260	130
1,2-DICHLOROBENZENE	12 J	54 J	160 J	510 J	ND	ND
1,2-DICHLOROETHANE	8 J	ND	ND	ND	ND	ND
1,2-DICHLOROPROPANE	ND	ND	ND	ND	ND	ND
1,3,5-TRIMETHYLBENZENE	22 J	130 J	710 J	3,500 J	ND	ND
1,3-BUTADIENE	ND	ND	ND	ND	ND	ND
1,3-DICHLOROBENZENE	6 J	40 J	ND	200 J	ND	ND
1,4-DICHLOROBENZENE	46 J	430 J	59 J	390 J	ND	ND
1,4-DIOXANE	ND	ND	ND	ND	ND	ND
2-BUTANONE	ND	ND	ND	ND	ND	ND
2-HEXANONE	ND	ND	ND	ND	ND	ND
4-ETHYLTOLUENE	ND	ND	200 J	410 J	3 J	ND
4-METHYL-2-PENTANONE	ND	ND	31 J	ND	ND	ND
ACETONE	ND	ND	670 J	ND	ND	ND
BENZENE	230 J	200 J	210 J	130 J	3 J	ND
BENZYL CHLORIDE	ND	ND	ND	ND	ND	ND
BROMODICHLOROMETHANE	ND	ND	ND	ND	ND	ND
BROMOFORM	ND	ND	ND	32 J	ND	ND
BROMOMETHANE	ND	ND	ND	ND	ND	ND
CARBON DISULFIDE	ND	74 J	12 J	3 J	ND	13 J
CARBON TETRACHLORIDE	ND	ND	ND	ND	ND	ND
CHLOROBENZENE	710 J	1,200 J	ND	ND	ND	ND
CHLOROETHANE	67 J	91 J	100 J	110 J	ND	ND
CHLOROFORM	ND	ND	ND	ND	ND	ND
CHLOROMETHANE	ND	ND	ND	ND	ND	ND
CIS-1,2-DICHLOROETHENE	11 J	17 J	28 J	13 J	ND	ND
CIS-1,3-DICHLOROPROPENE	ND	ND	ND	ND	ND	ND

APPENDIX C
QUARTERLY ANALYTICAL RESULTS (Continued)

Parcel E Nonstandard Data Gaps Investigation, Landfill Gas Characterization, Hunters Point Shipyard, San Francisco, California

Sample Location ID	SG03	SG03	SG03A	SG03A	SG03C	SG03C
Sample ID	SG03SG005	SG03SG006	SG03SG001	SG03SG002	SG03SG003	SG03SG004
Sample Date	04/04/2002	04/04/2002	04/02/2002	04/02/2002	04/03/2002	04/03/2002
EPA TO-14 VOA (µg/m3)						
CYCLOHEXANE	1,500 J	1,700 J	560 J	810 J	80	20
DIBROMOCHLOROMETHANE	ND	ND	ND	8 J	ND	ND
DICHLORODIFLUOROMETHANE	1,200 J	1,300 J	280 J	260 J	43	16 J
ETHANOL	ND	ND	ND	ND	ND	5 J
ETHYLBENZENE	11 J	17 J	110 J	130 J	ND	ND
HEPTANE	1,200 J	1,600 J	630 J	980 J	ND	9 J
HEXACHLOROBUTADIENE	ND	ND	ND	460 J	ND	ND
ISOPROPYL ALCOHOL	ND	ND	ND	ND	ND	ND
M,P-XYLENES	29 J	58 J	630 J	770 J	ND	30
METHYLENE CHLORIDE	ND	ND	66 J	ND	ND	120
N-HEXANE	1,400 J	1,600 J	1,300 J	1,300 J	ND	110
O-XYLENE	ND	ND	600 J	670 J	ND	14 J
PROPYLENE	2,500 J	2,600 J	730 J	2,600 J	ND	78
STYRENE	ND	ND	ND	97 J	ND	ND
TERT-BUTYL METHYL ETHER	ND	ND	ND	ND	ND	ND
TETRACHLOROETHENE	ND	ND	ND	16 J	ND	ND
TETRAHYDROFURAN	ND	ND	ND	ND	ND	ND
TOLUENE	ND	ND	140 J	88 J	ND	26
TRANS-1,2-DICHLOROETHENE	8 J	10 J	ND	4 J	ND	ND
TRANS-1,3-DICHLOROPROPENE	ND	ND	ND	7 J	ND	ND
TRICHLOROETHENE	8 J	11 J	16 J	12 J	ND	12 J
TRICHLOROFLUOROMETHANE	ND	ND	ND	ND	ND	ND
VINYL ACETATE	ND	ND	ND	ND	ND	ND
VINYL CHLORIDE	120 J	100 J	51 J	54 J	ND	ND
EPA 3C Landfill Gas (%)						
CARBON DIOXIDE	17	17	23 J	22 J	10	2
CARBON MONOXIDE	ND	ND	ND	ND	ND	ND
METHANE	42	40	61 J	60 J	28	3
NITROGEN	32 J	35 J	15	15 J	56	86
OXYGEN	9	8	3	3	5	13
EPA 25C Total Nonmethane Organic Carbon (ppmv)						
METHANE	440,000 J	420,000 J	610,000 J	600,000 J	280,000 J	34,000 J
NONMETHANE ORGANIC CARBON	70	66	96	97	30	ND

APPENDIX C
QUARTERLY ANALYTICAL RESULTS (Continued)

Parcel E Nonstandard Data Gaps Investigation, Landfill Gas Characterization, Hunters Point Shipyard, San Francisco, California

Sample Location ID	SG03D	SG03D	SG04	SG04	SG04A	SG04A	SG04A
Sample ID	SG03SG007	SG03SG008	SG04SG001	SG04SG002	SG04SG003	SG04SG004	SG04SG005
Sample Date	04/05/2002	04/05/2002	03/27/2002	03/27/2002	04/03/2002	04/03/2002	04/03/2002
EPA TO-14 VOA (µg/m3)							
1,1,1-TRICHLOROETHANE	ND	ND	ND	ND	ND	ND	ND
1,1,2,2-TETRACHLOROETHANE	ND	ND	ND	ND	ND	ND	ND
1,1,2-TRICHLORO-1,2,2-TRIFLUOROETHANE	ND	ND	ND	ND	ND	ND	ND
1,1,2-TRICHLOROETHANE	ND	ND	ND	ND	ND	ND	ND
1,1-DICHLOROETHANE	ND	ND	4 J	20	52	8 J	50
1,1-DICHLOROETHENE	ND	ND	3 J	ND	ND	ND	ND
1,2,4-TRICHLOROBENZENE	ND	ND	83	ND	6 J	ND	ND
1,2,4-TRIMETHYLBENZENE	ND	9	ND	ND	ND	ND	41
1,2-DIBROMOETHANE	ND	ND	ND	ND	ND	ND	ND
1,2-DICHLORO-1,1,2,2-TETRAFLUOROETHANE	ND	ND	330	550	640	120	620
1,2-DICHLOROBENZENE	ND	6 J	79	21	ND	ND	ND
1,2-DICHLOROETHANE	ND	ND	5 J	5 J	4 J	ND	ND
1,2-DICHLOROPROPANE	ND	ND	ND	3 J	ND	ND	ND
1,3,5-TRIMETHYLBENZENE	ND	ND	ND	12 J	ND	ND	31
1,3-BUTADIENE	ND	ND	ND	3 J	ND	ND	ND
1,3-DICHLOROBENZENE	ND	5 J	79	10 J	ND	ND	ND
1,4-DICHLOROBENZENE	ND	5 J	680	100	ND	ND	ND
1,4-DIOXANE	ND	ND	ND	ND	ND	ND	ND
2-BUTANONE	ND	ND	ND	ND	ND	ND	ND
2-HEXANONE	ND	ND	ND	ND	ND	ND	ND
4-ETHYLTOLUENE	ND	ND	ND	ND	ND	ND	10 J
4-METHYL-2-PENTANONE	ND	ND	220	ND	ND	ND	ND
ACETONE	ND	37	260	390	ND	56	670
BENZENE	ND	ND	440	200	85	13	55
BENZYL CHLORIDE	ND	ND	ND	ND	ND	ND	ND
BROMODICHLOROMETHANE	ND	ND	ND	ND	ND	ND	ND
BROMOFORM	ND	ND	ND	ND	ND	ND	ND
BROMOMETHANE	ND	ND	ND	ND	ND	ND	ND
CARBON DISULFIDE	ND	ND	3 J	450	5 J	36	18
CARBON TETRACHLORIDE	ND	ND	ND	ND	ND	ND	ND
CHLOROBENZENE	ND	ND	740	280	ND	ND	ND
CHLOROETHANE	ND	ND	22	62	440	72	490
CHLOROFORM	ND	ND	ND	ND	ND	ND	ND
CHLOROMETHANE	ND	3 J	ND	2 J	14 J	ND	4 J
CIS-1,2-DICHLOROETHENE	ND	ND	20	44	42	6 J	40
CIS-1,3-DICHLOROPROPENE	ND	ND	ND	ND	ND	ND	ND

APPENDIX C
QUARTERLY ANALYTICAL RESULTS (Continued)

Parcel E Nonstandard Data Gaps Investigation, Landfill Gas Characterization, Hunters Point Shipyard, San Francisco, California

Sample Location ID	SG03D	SG03D	SG04	SG04	SG04A	SG04A	SG04A
Sample ID	SG03SG007	SG03SG008	SG04SG001	SG04SG002	SG04SG003	SG04SG004	SG04SG005
Sample Date	04/05/2002	04/05/2002	03/27/2002	03/27/2002	04/03/2002	04/03/2002	04/03/2002
EPA TO-14 VOA (µg/m3)							
CYCLOHEXANE	ND	ND	980	990	890	140	750
DIBROMOCHLOROMETHANE	ND	ND	ND	ND	ND	ND	ND
DICHLORODIFLUOROMETHANE	ND	ND	140	55	57	13 J	76
ETHANOL	ND	310	ND	ND	ND	42	ND
ETHYLBENZENE	ND	ND	36	20	13 J	ND	13 J
HEPTANE	ND	ND	1,800	1,100	210	32	170
HEXACHLOROBUTADIENE	ND	ND	ND	33 J	ND	ND	ND
ISOPROPYL ALCOHOL	ND	49	ND	ND	ND	ND	ND
M,P-XYLENES	ND	11	48	53	ND	13 J	66
METHYLENE CHLORIDE	ND	ND	ND	ND	ND	340	ND
N-HEXANE	ND	ND	1,400	950	1,100	340	730
O-XYLENE	ND	5 J	31	38	27 J	ND	44
PROPYLENE	13	9	ND	780	1,100	78	260
STYRENE	ND	ND	ND	3 J	ND	ND	ND
TERT-BUTYL METHYL ETHER	ND	ND	ND	ND	ND	ND	ND
TETRACHLOROETHENE	ND	ND	19	34	20 J	ND	14 J
TETRAHYDROFURAN	ND	ND	ND	10 J	ND	ND	ND
TOLUENE	ND	3 J	ND	ND	88	170	16
TRANS-1,2-DICHLOROETHENE	ND	ND	3 J	11 J	8 J	ND	8 J
TRANS-1,3-DICHLOROPROPENE	ND	ND	ND	ND	ND	ND	ND
TRICHLOROETHENE	ND	ND	13	40	14 J	ND	11 J
TRICHLOROFLUOROMETHANE	ND	ND	ND	16 J	ND	ND	ND
VINYL ACETATE	ND	ND	ND	3 J	ND	ND	ND
VINYL CHLORIDE	ND	ND	18	47	35	5 J	28
EPA 3C Landfill Gas (%)							
CARBON DIOXIDE	ND	ND	26 J	13	18	4	18
CARBON MONOXIDE	ND	ND	ND	ND	ND	ND	ND
METHANE	ND	ND	62 J	32	50 J	12	47
NITROGEN	82	81	10	48	26 J	67	29
OXYGEN	20 J	19 J	1	7	7	17 J	4
EPA 25C Total Nonmethane Organic Carbon (ppmv)							
METHANE	ND	ND	ND	320,000 J	500,000 J	130,000 J	470,000 J
NONMETHANE ORGANIC CARBON	ND	ND	92	86	170	44	180

APPENDIX C
QUARTERLY ANALYTICAL RESULTS (Continued)
Parcel E Nonstandard Data Gaps Investigation, Landfill Gas Characterization, Hunters Point Shipyard, San Francisco, California

Sample Location ID	SG05A	SG05B	SG05B	SG05C	SG05C	SG06	SG06A
Sample ID	SG05SG001	SG05SG002	SG05SG003	SG05SG004	SG05SG005	SG06SG001	SG06SG002
Sample Date	03/29/2002	03/29/2002	03/29/2002	03/29/2002	03/29/2002	03/26/2002	03/27/2002
EPA TO-14 VOA (µg/m3)							
1,1,1-TRICHLOROETHANE	ND	ND	ND	ND	ND	ND	ND
1,1,2,2-TETRACHLOROETHANE	ND	6 J	ND	ND	ND	ND	ND
1,1,2-TRICHLORO-1,2,2-TRIFLUOROETHANE	ND	ND	ND	ND	ND	ND	ND
1,1,2-TRICHLOROETHANE	ND	ND	ND	ND	ND	ND	ND
1,1-DICHLOROETHANE	130 J	120	100 J	ND	ND	ND	ND
1,1-DICHLOROETHENE	ND	ND	ND	ND	ND	ND	ND
1,2,4-TRICHLOROBENZENE	16 J	ND	12 J	ND	ND	ND	ND
1,2,4-TRIMETHYLBENZENE	20 J	ND	ND	ND	ND	ND	6 J
1,2-DIBROMOETHANE	ND	ND	ND	ND	ND	ND	ND
1,2-DICHLORO-1,1,2,2-TETRAFLUOROETHANE	510 J	400	460 J	660	280	16	880
1,2-DICHLOROBENZENE	10 J	ND	ND	ND	ND	ND	ND
1,2-DICHLOROETHANE	ND	ND	ND	ND	ND	ND	ND
1,2-DICHLOROPROPANE	ND	ND	ND	ND	ND	ND	ND
1,3,5-TRIMETHYLBENZENE	11 J	ND	ND	ND	ND	ND	ND
1,3-BUTADIENE	5 J	2 J	11 J	3 J	4 J	3	ND
1,3-DICHLOROBENZENE	8 J	ND	ND	ND	ND	ND	ND
1,4-DICHLOROBENZENE	17 J	ND	ND	ND	ND	ND	5 J
1,4-DIOXANE	ND	ND	ND	ND	ND	ND	ND
2-BUTANONE	ND	ND	ND	ND	ND	ND	ND
2-HEXANONE	ND	ND	ND	ND	ND	ND	ND
4-ETHYLTOLUENE	8 J	ND	ND	ND	ND	ND	ND
4-METHYL-2-PENTANONE	ND	ND	ND	ND	ND	4	ND
ACETONE	ND	550	ND	ND	ND	ND	19
BENZENE	49 J	12	3 J	13	100	13	7
BENZYL CHLORIDE	ND	ND	ND	ND	ND	ND	ND
BROMODICHLOROMETHANE	ND	ND	ND	ND	ND	ND	ND
BROMOFORM	ND	ND	ND	ND	ND	ND	ND
BROMOMETHANE	ND	ND	ND	ND	ND	ND	ND
CARBON DISULFIDE	16 J	ND	ND	ND	13	3	ND
CARBON TETRACHLORIDE	ND	ND	ND	ND	ND	ND	ND
CHLOROBENZENE	ND	ND	ND	5 J	ND	ND	ND
CHLOROETHANE	610 J	240	190 J	10	ND	ND	ND
CHLOROFORM	ND	ND	ND	ND	ND	ND	ND
CHLOROMETHANE	ND	64	ND	ND	ND	2	ND
CIS-1,2-DICHLOROETHENE	77 J	ND	14 J	ND	ND	ND	ND
CIS-1,3-DICHLOROPROPENE	ND	ND	ND	ND	ND	ND	ND

APPENDIX C
QUARTERLY ANALYTICAL RESULTS (Continued)

Parcel E Nonstandard Data Gaps Investigation, Landfill Gas Characterization, Hunters Point Shipyard, San Francisco, California

Sample Location ID	SG05A	SG05B	SG05B	SG05C	SG05C	SG06	SG06A
Sample ID	SG05SG001	SG05SG002	SG05SG003	SG05SG004	SG05SG005	SG06SG001	SG06SG002
Sample Date	03/29/2002	03/29/2002	03/29/2002	03/29/2002	03/29/2002	03/26/2002	03/27/2002
EPA TO-14 VOA (µg/m3)							
CYCLOHEXANE	690 J	350	350 J	94	650	52	19
DIBROMOCHLOROMETHANE	ND	ND	ND	ND	ND	ND	ND
DICHLORODIFLUOROMETHANE	260 J	59	ND	ND	ND	12	36
ETHANOL	ND	110	ND	ND	1,200	ND	ND
ETHYLBENZENE	15 J	3 J	ND	ND	17 J	13	ND
HEPTANE	74 J	33	66 J	10	150	62	ND
HEXACHLOROBUTADIENE	35 J	ND	ND	ND	ND	ND	12 J
ISOPROPYL ALCOHOL	ND	ND	ND	ND	180	11	ND
M,P-XYLENES	43 J	9 J	7 J	8 J	36 J	35	6
METHYLENE CHLORIDE	ND	ND	ND	ND	ND	ND	ND
N-HEXANE	940 J	140	350 J	ND	420	ND	10
O-XYLENE	18 J	ND	ND	ND	15 J	18	3 J
PROPYLENE	360 J	ND	ND	ND	ND	53	ND
STYRENE	11 J	ND	ND	ND	ND	ND	ND
TERT-BUTYL METHYL ETHER	ND	ND	ND	ND	ND	29	ND
TETRACHLOROETHENE	35 J	ND	ND	ND	ND	13	6 J
TETRAHYDROFURAN	ND	ND	ND	ND	ND	ND	ND
TOLUENE	160 J	8	ND	7 J	160	65	6
TRANS-1,2-DICHLOROETHENE	16 J	ND	3 J	ND	ND	ND	ND
TRANS-1,3-DICHLOROPROPENE	ND	ND	ND	ND	ND	ND	ND
TRICHLOROETHENE	53 J	ND	ND	ND	8 J	ND	ND
TRICHLOROFLUOROMETHANE	ND	ND	ND	ND	ND	6	ND
VINYL ACETATE	ND	ND	ND	ND	ND	ND	ND
VINYL CHLORIDE	59 J	3 J	ND	ND	ND	ND	ND
EPA 3C Landfill Gas (%)							
CARBON DIOXIDE	8	16	19	14	4	0.3	10
CARBON MONOXIDE	ND	ND	ND	ND	ND	ND	ND
METHANE	31	51	55 J	30	10	1	47
NITROGEN	47	28	26	48	68	80	41
OXYGEN	13	4	1	8	17	20 J	2
EPA 25C Total Nonmethane Organic Carbon (ppmv)							
METHANE	360,000 J	510,000 J	560,000 J	300,000 J	100,000 J	14,000 J	470,000 J
NONMETHANE ORGANIC CARBON	120	190	210	140	56	ND	120

APPENDIX C
QUARTERLY ANALYTICAL RESULTS (Continued)

Parcel E Nonstandard Data Gaps Investigation, Landfill Gas Characterization, Hunters Point Shipyard, San Francisco, California

Sample Location ID	SG06B	SG06C	SG07	SG07A	SG07A	SG08
Sample ID	SG06SG003	SG06SG004	SG07SG001	SG07SG002	SG07SG003	SG08SG001
Sample Date	03/27/2002	03/28/2002	03/26/2002	03/28/2002	03/28/2002	03/26/2002
EPA TO-14 VOA (µg/m3)						
1,1,1-TRICHLOROETHANE	ND	ND	ND	ND	ND	39
1,1,2,2-TETRACHLOROETHANE	ND	ND	ND	ND	ND	ND
1,1,2-TRICHLORO-1,2,2-TRIFLUOROETHANE	ND	ND	ND	ND	ND	16 J
1,1,2-TRICHLOROETHANE	ND	ND	ND	ND	ND	ND
1,1-DICHLOROETHANE	ND	ND	ND	ND	ND	ND
1,1-DICHLOROETHENE	ND	ND	ND	ND	ND	5 J
1,2,4-TRICHLOROBENZENE	ND	ND	ND	ND	ND	15 J
1,2,4-TRIMETHYLBENZENE	ND	10	ND	6 J	20 J	2,300
1,2-DIBROMOETHANE	ND	ND	ND	ND	ND	ND
1,2-DICHLORO-1,1,2,2-TETRAFLUOROETHANE	220	12	ND	98	ND	970
1,2-DICHLOROBENZENE	ND	ND	ND	5 J	ND	16 J
1,2-DICHLOROETHANE	ND	ND	ND	ND	ND	25
1,2-DICHLOROPROPANE	ND	ND	ND	ND	ND	ND
1,3,5-TRIMETHYLBENZENE	ND	ND	ND	ND	10 J	1,100
1,3-BUTADIENE	ND	ND	ND	3 J	3 J	7 J
1,3-DICHLOROBENZENE	ND	ND	ND	ND	ND	ND
1,4-DICHLOROBENZENE	ND	8 J	ND	5 J	ND	ND
1,4-DIOXANE	ND	ND	ND	ND	ND	ND
2-BUTANONE	ND	ND	ND	ND	ND	ND
2-HEXANONE	ND	ND	ND	ND	ND	ND
4-ETHYLTOLUENE	ND	ND	ND	ND	5 J	430
4-METHYL-2-PENTANONE	ND	ND	ND	ND	ND	180
ACETONE	ND	ND	ND	ND	ND	2,300
BENZENE	ND	ND	8	ND	8	55
BENZYL CHLORIDE	ND	ND	ND	ND	ND	ND
BROMODICHLOROMETHANE	ND	ND	ND	ND	ND	ND
BROMOFORM	ND	ND	ND	ND	ND	ND
BROMOMETHANE	ND	ND	ND	ND	ND	ND
CARBON DISULFIDE	ND	3 J	ND	28	ND	4 J
CARBON TETRACHLORIDE	ND	ND	ND	ND	ND	ND
CHLOROBENZENE	ND	ND	ND	ND	ND	ND
CHLOROETHANE	ND	ND	ND	ND	ND	1,100
CHLOROFORM	ND	ND	ND	ND	ND	ND
CHLOROMETHANE	ND	ND	ND	ND	ND	ND
CIS-1,2-DICHLOROETHENE	ND	ND	6	ND	ND	26
CIS-1,3-DICHLOROPROPENE	ND	ND	ND	ND	ND	ND

APPENDIX C
QUARTERLY ANALYTICAL RESULTS (Continued)

Parcel E Nonstandard Data Gaps Investigation, Landfill Gas Characterization, Hunters Point Shipyard, San Francisco, California

Sample Location ID	SG06B	SG06C	SG07	SG07A	SG07A	SG08
Sample ID	SG06SG003	SG06SG004	SG07SG001	SG07SG002	SG07SG003	SG08SG001
Sample Date	03/27/2002	03/28/2002	03/26/2002	03/28/2002	03/28/2002	03/26/2002
EPA TO-14 VOA (µg/m3)						
CYCLOHEXANE	7	11	450	8	12	1,300
DIBROMOCHLOROMETHANE	ND	ND	ND	ND	ND	ND
DICHLORODIFLUOROMETHANE	4 J	7	9	ND	ND	20 J
ETHANOL	2 J	2 J	ND	ND	ND	ND
ETHYLBENZENE	ND	ND	ND	ND	8 J	23
HEPTANE	3 J	5 J	120	930	27	350
HEXACHLOROBUTADIENE	ND	ND	ND	23 J	ND	ND
ISOPROPYL ALCOHOL	ND	ND	ND	ND	ND	3 J
M,P-XYLENES	ND	3 J	9	4 J	29 J	150
METHYLENE CHLORIDE	ND	ND	ND	ND	ND	ND
N-HEXANE	160	18	530	870	ND	2,600
O-XYLENE	ND	ND	ND	ND	18 J	160
PROPYLENE	27	29	21	88	44	530
STYRENE	ND	ND	ND	ND	ND	ND
TERT-BUTYL METHYL ETHER	ND	ND	ND	ND	ND	ND
TETRACHLOROETHENE	ND	ND	ND	ND	ND	60
TETRAHYDROFURAN	ND	ND	ND	ND	ND	6 J
TOLUENE	ND	5 J	ND	3 J	12	ND
TRANS-1,2-DICHLOROETHENE	ND	ND	ND	ND	ND	6 J
TRANS-1,3-DICHLOROPROPENE	ND	ND	ND	ND	ND	ND
TRICHLOROETHENE	ND	ND	ND	ND	ND	13 J
TRICHLOROFLUOROMETHANE	ND	ND	ND	ND	ND	ND
VINYL ACETATE	ND	ND	ND	ND	ND	ND
VINYL CHLORIDE	ND	ND	ND	ND	ND	26
EPA 3C Landfill Gas (%)						
CARBON DIOXIDE	5	ND	20	6	ND	3
CARBON MONOXIDE	ND	ND	ND	ND	ND	ND
METHANE	6	ND	72 J	4	0.2 J	65
NITROGEN	77	90	5	87	79	26
OXYGEN	9	5	0.5	4	20	5
EPA 25C Total Nonmethane Organic Carbon (ppmv)						
METHANE	65,000 J	550	720,000 J	36,000 J	410	650,000 J
NONMETHANE ORGANIC CARBON	11	0.3 J	150	ND	ND	190

APPENDIX C
QUARTERLY ANALYTICAL RESULTS (Continued)

Parcel E Nonstandard Data Gaps Investigation, Landfill Gas Characterization, Hunters Point Shipyard, San Francisco, California

Sample Location ID	SG08A	SG08A	SG11	SG12	SG15	SG21A	SG21A
Sample ID	SG08SG002	SG08SG003	SG11SG001	SG12SG001	SG15SG001	SG21SG001	SG21SG002
Sample Date	03/28/2002	03/28/2002	03/25/2002	03/25/2002	03/26/2002	04/04/2002	04/04/2002
EPA TO-14 VOA (µg/m3)							
1,1,1-TRICHLOROETHANE	ND	ND	28	24,000	ND	ND	ND
1,1,2,2-TETRACHLOROETHANE	ND	ND	ND	8 J	ND	ND	ND
1,1,2-TRICHLORO-1,2,2-TRIFLUOROETHANE	ND	ND	ND	520	83	ND	ND
1,1,2-TRICHLOROETHANE	ND	ND	ND	6 J	ND	ND	ND
1,1-DICHLOROETHANE	ND	ND	4	840	ND	ND	ND
1,1-DICHLOROETHENE	ND	ND	4	3,500	ND	ND	ND
1,2,4-TRICHLOROBENZENE	19	ND	ND	20 J	ND	48	ND
1,2,4-TRIMETHYLBENZENE	190	ND	ND	ND	ND	17	35
1,2-DIBROMOETHANE	ND	ND	ND	8 J	ND	ND	ND
1,2-DICHLORO-1,1,2,2-TETRAFLUOROETHANE	410	160	ND	13 J	ND	ND	ND
1,2-DICHLOROBENZENE	ND	ND	ND	10 J	ND	ND	ND
1,2-DICHLOROETHANE	ND	ND	ND	4 J	ND	ND	ND
1,2-DICHLOROPROPANE	ND	ND	ND	4 J	ND	ND	ND
1,3,5-TRIMETHYLBENZENE	40	ND	ND	5 J	450	4 J	10 J
1,3-BUTADIENE	ND	ND	3	2 J	ND	ND	ND
1,3-DICHLOROBENZENE	ND	ND	ND	7 J	ND	ND	ND
1,4-DICHLOROBENZENE	ND	ND	ND	9 J	ND	17	ND
1,4-DIOXANE	ND	ND	ND	ND	ND	ND	ND
2-BUTANONE	ND	ND	ND	ND	ND	ND	ND
2-HEXANONE	ND	ND	ND	11 J	ND	ND	ND
4-ETHYLTOLUENE	18	ND	ND	4 J	ND	3 J	ND
4-METHYL-2-PENTANONE	ND	ND	ND	8 J	ND	ND	ND
ACETONE	94	40	ND	ND	130	ND	ND
BENZENE	72	6	10	21	6	ND	10 J
BENZYL CHLORIDE	ND	ND	ND	5 J	ND	ND	ND
BROMODICHLOROMETHANE	ND	ND	ND	67	ND	ND	ND
BROMOFORM	ND	ND	ND	14 J	ND	ND	ND
BROMOMETHANE	ND	ND	ND	ND	ND	ND	ND
CARBON DISULFIDE	9	4 J	4	14	21	ND	9 J
CARBON TETRACHLORIDE	ND	ND	ND	44	ND	ND	ND
CHLOROBENZENE	ND	ND	ND	6 J	ND	ND	ND
CHLOROETHANE	ND	ND	ND	4 J	ND	ND	ND
CHLOROFORM	ND	ND	ND	110	ND	ND	ND
CHLOROMETHANE	ND	ND	ND	ND	ND	ND	ND
CIS-1,2-DICHLOROETHENE	ND	ND	40	84	4	ND	ND
CIS-1,3-DICHLOROPROPENE	ND	ND	ND	4 J	ND	ND	ND

APPENDIX C
QUARTERLY ANALYTICAL RESULTS (Continued)

Parcel E Nonstandard Data Gaps Investigation, Landfill Gas Characterization, Hunters Point Shipyard, San Francisco, California

Sample Location ID	SG08A	SG08A	SG11	SG12	SG15	SG21A	SG21A
Sample ID	SG08SG002	SG08SG003	SG11SG001	SG12SG001	SG15SG001	SG21SG001	SG21SG002
Sample Date	03/28/2002	03/28/2002	03/25/2002	03/25/2002	03/26/2002	04/04/2002	04/04/2002
EPA TO-14 VOA (µg/m3)							
CYCLOHEXANE	300	52	27	160	100	ND	ND
DIBROMOCHLOROMETHANE	ND	ND	ND	10 J	ND	ND	ND
DICHLORODIFLUOROMETHANE	250	11	ND	ND	6	ND	ND
ETHANOL	7	ND	ND	53	25	ND	ND
ETHYLBENZENE	6 J	ND	ND	5 J	9	ND	10 J
HEPTANE	460	12	21	8 J	22	120	1,300
HEXACHLOROBUTADIENE	58	ND	ND	22 J	12	ND	ND
ISOPROPYL ALCOHOL	ND	ND	ND	24	ND	ND	ND
M,P-XYLENES	33	ND	ND	11 J	44	8	32
METHYLENE CHLORIDE	54	ND	ND	ND	180	ND	ND
N-HEXANE	100	36	64	68	150	160	1,700
O-XYLENE	12	ND	ND	5 J	66	4 J	14 J
PROPYLENE	76	35	54	7	65	150	1,700
STYRENE	ND	ND	ND	4 J	ND	ND	ND
TERT-BUTYL METHYL ETHER	ND	ND	ND	ND	ND	ND	ND
TETRACHLOROETHENE	ND	ND	43	23,000	65	ND	ND
TETRAHYDROFURAN	ND	ND	ND	3 J	ND	ND	ND
TOLUENE	55	4 J	ND	26	54	ND	56
TRANS-1,2-DICHLOROETHENE	ND	ND	6	17	ND	ND	ND
TRANS-1,3-DICHLOROPROPENE	ND	ND	ND	4 J	ND	ND	ND
TRICHLOROETHENE	ND	ND	17	6,400	27	ND	ND
TRICHLOROFLUOROMETHANE	ND	ND	6	4,500	ND	ND	ND
VINYL ACETATE	ND	ND	ND	ND	ND	ND	ND
VINYL CHLORIDE	ND	ND	11	2 J	12	ND	ND
EPA 3C Landfill Gas (%)							
CARBON DIOXIDE	5	4	5	2	ND	ND	ND
CARBON MONOXIDE	ND	ND	ND	ND	ND	ND	ND
METHANE	23	6	ND	ND	ND	0.2 J	0.4
NITROGEN	64	83	90	86	79	78 J	77 J
OXYGEN	11	7	3	11	21	22	22
EPA 25C Total Nonmethane Organic Carbon (ppmv)							
METHANE	230,000 J	82,000 J	210	ND	5,000 J	510	4,100 J
NONMETHANE ORGANIC CARBON	50	5	ND	ND	ND	ND	ND

APPENDIX C
QUARTERLY ANALYTICAL RESULTS (Continued)

Parcel E Nonstandard Data Gaps Investigation, Landfill Gas Characterization, Hunters Point Shipyard, San Francisco, California

Sample Location ID	SG24	SG24	SG25	SG25	SG25
Sample ID	SG24SG001	SG24SG002	SG25SG001	SG25SG002	SG25SG003
Sample Date	03/27/2002	03/27/2002	03/27/2002	03/27/2002	03/27/2002
EPA TO-14 VOA (µg/m3)					
1,1,1-TRICHLOROETHANE	ND	ND	ND	ND	5 J
1,1,2,2-TETRACHLOROETHANE	ND	ND	ND	ND	ND
1,1,2-TRICHLORO-1,2,2-TRIFLUOROETHANE	ND	ND	10 J	10 J	10 J
1,1,2-TRICHLOROETHANE	ND	ND	5 J	5 J	ND
1,1-DICHLOROETHANE	ND	ND	18 J	17 J	28 J
1,1-DICHLOROETHENE	ND	ND	ND	ND	ND
1,2,4-TRICHLOROBENZENE	ND	ND	ND	18 J	35 J
1,2,4-TRIMETHYLBENZENE	260	13 J	23 J	23 J	23 J
1,2-DIBROMOETHANE	ND	ND	ND	ND	ND
1,2-DICHLORO-1,1,2,2-TETRAFLUOROETHANE	ND	ND	410	370	400
1,2-DICHLOROBENZENE	ND	ND	23 J	12 J	13 J
1,2-DICHLOROETHANE	ND	ND	12 J	10 J	12 J
1,2-DICHLOROPROPANE	ND	ND	ND	ND	ND
1,3,5-TRIMETHYLBENZENE	60	ND	20 J	14 J	17 J
1,3-BUTADIENE	ND	ND	ND	ND	ND
1,3-DICHLOROBENZENE	ND	ND	20 J	11 J	10 J
1,4-DICHLOROBENZENE	ND	ND	1,100	1,100	ND
1,4-DIOXANE	ND	ND	ND	ND	ND
2-BUTANONE	ND	ND	ND	ND	ND
2-HEXANONE	ND	8 J	ND	ND	ND
4-ETHYLTOLUENE	49	ND	11 J	8 J	7 J
4-METHYL-2-PENTANONE	ND	ND	ND	750	ND
ACETONE	ND	ND	ND	ND	ND
BENZENE	ND	ND	280	280	360
BENZYL CHLORIDE	ND	ND	ND	ND	ND
BROMODICHLOROMETHANE	17 J	ND	ND	ND	ND
BROMOFORM	ND	ND	ND	ND	ND
BROMOMETHANE	ND	ND	ND	ND	ND
CARBON DISULFIDE	ND	8 J	3 J	3 J	3 J
CARBON TETRACHLORIDE	13 J	ND	ND	ND	ND
CHLOROBENZENE	ND	ND	1,100	760	ND
CHLOROETHANE	ND	ND	76	70	88
CHLOROFORM	ND	ND	ND	ND	ND
CHLOROMETHANE	ND	ND	6 J	5 J	6 J
CIS-1,2-DICHLOROETHENE	ND	ND	18 J	18 J	28 J
CIS-1,3-DICHLOROPROPENE	ND	ND	ND	ND	ND

APPENDIX C
QUARTERLY ANALYTICAL RESULTS (Continued)

Parcel E Nonstandard Data Gaps Investigation, Landfill Gas Characterization, Hunters Point Shipyard, San Francisco, California

Sample Location ID	SG24	SG24	SG25	SG25	SG25
Sample ID	SG24SG001	SG24SG002	SG25SG001	SG25SG002	SG25SG003
Sample Date	03/27/2002	03/27/2002	03/27/2002	03/27/2002	03/27/2002
EPA TO-14 VOA (µg/m3)					
CYCLOHEXANE	15	ND	2,100	2,100	2,100
DIBROMOCHLOROMETHANE	ND	ND	ND	ND	ND
DICHLORODIFLUOROMETHANE	ND	ND	250	220	250
ETHANOL	ND	ND	15	3 J	ND
ETHYLBENZENE	ND	ND	46	37	22 J
HEPTANE	31	ND	1,600	1,500	1,300
HEXACHLOROBUTADIENE	ND	ND	ND	13 J	14 J
ISOPROPYL ALCOHOL	ND	ND	ND	ND	ND
M,P-XYLENES	10 J	ND	33	24 J	16 J
METHYLENE CHLORIDE	ND	ND	ND	ND	ND
N-HEXANE	ND	ND	3,100	2,900	3,400
O-XYLENE	12 J	ND	14 J	8 J	10 J
PROPYLENE	130	ND	2,200	1,900	1,200
STYRENE	ND	ND	4 J	ND	ND
TERT-BUTYL METHYL ETHER	ND	ND	ND	ND	ND
TETRACHLOROETHENE	ND	ND	26 J	ND	9 J
TETRAHYDROFURAN	ND	ND	8 J	7 J	3 J
TOLUENE	ND	ND	14 J	16 J	8 J
TRANS-1,2-DICHLOROETHENE	ND	ND	7 J	6 J	10 J
TRANS-1,3-DICHLOROPROPENE	ND	ND	ND	ND	ND
TRICHLOROETHENE	18 J	ND	52	11 J	15 J
TRICHLOROFLUOROMETHANE	ND	ND	ND	ND	ND
VINYL ACETATE	ND	ND	ND	ND	ND
VINYL CHLORIDE	ND	ND	26	24	26
EPA 3C Landfill Gas (%)					
CARBON DIOXIDE	ND	ND	23 J	23 J	24
CARBON MONOXIDE	ND	ND	ND	ND	ND
METHANE	ND	ND	64 J	63 J	66 J
NITROGEN	77	80	10	11	9
OXYGEN	21	19 J	2	2	1
EPA 25C Total Nonmethane Organic Carbon (ppmv)					
METHANE	ND	ND	640,000 J	630,000 J	660,000 J
NONMETHANE ORGANIC CARBON	ND	ND	48	52	52

APPENDIX C
QUARTERLY ANALYTICAL RESULTS (Continued)

Parcel E Nonstandard Data Gaps Investigation, Landfill Gas Characterization, Hunters Point Shipyard, San Francisco, California

Sample Location ID	SG25A	SG25A	SG25A	SG25B	SG25C	SG25D	SG25D
Sample ID	SG25SG004	SG25SG005	SG25SG006	SG25SG007	SG25SG008	SG25SG009	SG25SG010
Sample Date	04/01/2002	04/01/2002	04/01/2002	04/01/2002	04/03/2002	04/05/2002	04/05/2002
EPA TO-14 VOA (µg/m3)							
1,1,1-TRICHLOROETHANE	5 J	4 J	4 J	5 J	ND	ND	ND
1,1,2,2-TETRACHLOROETHANE	ND	ND	ND	ND	ND	ND	ND
1,1,2-TRICHLORO-1,2,2-TRIFLUOROETHANE	ND	6 J	5 J	8 J	ND	ND	ND
1,1,2-TRICHLOROETHANE	ND	5 J	4 J	ND	ND	ND	ND
1,1-DICHLOROETHANE	ND	21 J	23 J	5 J	ND	ND	ND
1,1-DICHLOROETHENE	ND	ND	ND	ND	ND	ND	ND
1,2,4-TRICHLOROBENZENE	ND	14 J	17 J	12 J	ND	ND	ND
1,2,4-TRIMETHYLBENZENE	ND	12 J	12 J	5 J	ND	ND	ND
1,2-DIBROMOETHANE	ND	ND	ND	ND	ND	ND	ND
1,2-DICHLORO-1,1,2,2-TETRAFLUOROETHANE	ND	280	300	220	ND	ND	12 J
1,2-DICHLOROBENZENE	ND	7 J	7 J	7 J	ND	ND	ND
1,2-DICHLOROETHANE	ND	8 J	9 J	ND	ND	ND	ND
1,2-DICHLOROPROPANE	ND	4 J	3 J	ND	ND	ND	ND
1,3,5-TRIMETHYLBENZENE	ND	19 J	9 J	ND	ND	ND	ND
1,3-BUTADIENE	ND	ND	ND	2 J	ND	7	18
1,3-DICHLOROBENZENE	ND	7 J	7 J	7 J	ND	ND	ND
1,4-DICHLOROBENZENE	8 J	9 J	8 J	7 J	ND	ND	ND
1,4-DIOXANE	ND	ND	ND	ND	ND	ND	ND
2-BUTANONE	ND	ND	ND	ND	ND	ND	ND
2-HEXANONE	45	ND	ND	ND	ND	ND	ND
4-ETHYLTOLUENE	ND	5 J	ND	ND	ND	4 J	8 J
4-METHYL-2-PENTANONE	ND	ND	ND	ND	ND	ND	ND
ACETONE	ND	ND	ND	ND	ND	ND	ND
BENZENE	ND	18 J	18 J	9 J	ND	5	12
BENZYL CHLORIDE	ND	ND	ND	ND	ND	ND	ND
BROMODICHLOROMETHANE	ND	ND	ND	ND	ND	ND	ND
BROMOFORM	ND	ND	ND	ND	ND	ND	ND
BROMOMETHANE	ND	3 J	ND	4 J	ND	ND	ND
CARBON DISULFIDE	26	3 J	ND	3 J	ND	ND	ND
CARBON TETRACHLORIDE	ND	ND	ND	ND	ND	ND	ND
CHLOROBENZENE	ND	ND	ND	ND	ND	ND	ND
CHLOROETHANE	ND	55	58	5 J	ND	ND	ND
CHLOROFORM	5 J	ND	ND	16 J	13	ND	ND
CHLOROMETHANE	ND	ND	ND	ND	ND	ND	ND
CIS-1,2-DICHLOROETHENE	ND	23 J	25 J	5 J	ND	ND	ND
CIS-1,3-DICHLOROPROPENE	ND	ND	ND	ND	ND	ND	ND

APPENDIX C
QUARTERLY ANALYTICAL RESULTS (Continued)

Parcel E Nonstandard Data Gaps Investigation, Landfill Gas Characterization, Hunters Point Shipyard, San Francisco, California

Sample Location ID	SG25A	SG25A	SG25A	SG25B	SG25C	SG25D	SG25D
Sample ID	SG25SG004	SG25SG005	SG25SG006	SG25SG007	SG25SG008	SG25SG009	SG25SG010
Sample Date	04/01/2002	04/01/2002	04/01/2002	04/01/2002	04/03/2002	04/05/2002	04/05/2002
EPA TO-14 VOA (µg/m3)							
CYCLOHEXANE	ND	1,600	1,600	180	3 J	ND	11
DIBROMOCHLOROMETHANE	ND	ND	ND	ND	ND	ND	ND
DICHLORODIFLUOROMETHANE	ND	410	430	31 J	4 J	ND	ND
ETHANOL	ND	ND	2 J	19	ND	5,700	12,000
ETHYLBENZENE	ND	31	16 J	8 J	ND	ND	7 J
HEPTANE	11	450	490	10 J	ND	ND	ND
HEXACHLOROBUTADIENE	ND	ND	ND	ND	ND	110	ND
ISOPROPYL ALCOHOL	ND	ND	2 J	ND	ND	ND	1,600
M,P-XYLENES	7	51	21 J	15 J	ND	ND	ND
METHYLENE CHLORIDE	420	ND	ND	ND	ND	ND	ND
N-HEXANE	380	1,800	1,900	37	3 J	ND	ND
O-XYLENE	ND	21 J	13 J	7 J	ND	ND	9 J
PROPYLENE	ND	37	41	320	ND	ND	310
STYRENE	ND	ND	ND	ND	ND	ND	ND
TERT-BUTYL METHYL ETHER	ND	ND	ND	ND	ND	ND	ND
TETRACHLOROETHENE	ND	210	7 J	ND	ND	ND	ND
TETRAHYDROFURAN	ND	ND	ND	ND	ND	ND	ND
TOLUENE	46	36	ND	36	3 J	ND	ND
TRANS-1,2-DICHLOROETHENE	ND	6 J	6 J	ND	ND	ND	ND
TRANS-1,3-DICHLOROPROPENE	ND	ND	ND	ND	ND	ND	ND
TRICHLOROETHENE	ND	290	22 J	12 J	ND	ND	ND
TRICHLOROFLUOROMETHANE	ND	ND	ND	5 J	ND	ND	ND
VINYL ACETATE	ND	ND	ND	ND	ND	ND	ND
VINYL CHLORIDE	ND	19	21	4 J	ND	ND	ND
EPA 3C Landfill Gas (%)							
CARBON DIOXIDE	23 J	21	23 J	11	2	ND	ND
CARBON MONOXIDE	ND	ND	ND	ND	ND	ND	ND
METHANE	62 J	56 J	59 J	30	ND	ND	ND
NITROGEN	11	19	14	48	79	80	80
OXYGEN	2	4	3	11	18 J	19 J	21
EPA 25C Total Nonmethane Organic Carbon (ppmv)							
METHANE	620,000 J	570,000 J	600,000 J	320,000 J	ND	310	3,600 J
NONMETHANE ORGANIC CARBON	60	22	57	25	ND	ND	ND

APPENDIX C
QUARTERLY ANALYTICAL RESULTS (Continued)

Parcel E Nonstandard Data Gaps Investigation, Landfill Gas Characterization, Hunters Point Shipyard, San Francisco, California

Sample Location ID	SG26A	SG27A	SG27B	UCSF LIGHT	UCSF LIGHT	UCSF LIGHT
Sample ID	SG26SG001	SG27SG001	SG27SG002	SGLPSG001	SGLPSG002	SGLPSG003
Sample Date	04/03/2002	04/03/2002	04/03/2002	04/05/2002	08/01/2002	11/13/2002
EPA TO-14 VOA (µg/m3)						
1,1,1-TRICHLOROETHANE	ND	ND	ND	ND	ND	ND
1,1,2,2-TETRACHLOROETHANE	ND	ND	ND	8 J	ND	ND
1,1,2-TRICHLORO-1,2,2-TRIFLUOROETHANE	ND	ND	ND	19	ND	ND
1,1,2-TRICHLOROETHANE	ND	ND	ND	ND	ND	ND
1,1-DICHLOROETHANE	17 J	ND	21 J	ND	ND	ND
1,1-DICHLOROETHENE	ND	ND	ND	ND	ND	ND
1,2,4-TRICHLOROBENZENE	46 J	6	ND	ND	ND	ND
1,2,4-TRIMETHYLBENZENE	360	ND	150 J	ND	ND	ND
1,2-DIBROMOETHANE	ND	ND	ND	ND	ND	ND
1,2-DICHLORO-1,1,2,2-TETRAFLUOROETHANE	360	21	560 J	6 J	ND	ND
1,2-DICHLOROBENZENE	50	ND	ND	ND	ND	ND
1,2-DICHLOROETHANE	ND	ND	ND	ND	ND	ND
1,2-DICHLOROPROPANE	ND	ND	ND	ND	ND	ND
1,3,5-TRIMETHYLBENZENE	340	ND	200 J	7 J	ND	ND
1,3-BUTADIENE	ND	ND	ND	ND	ND	ND
1,3-DICHLOROBENZENE	11 J	ND	ND	ND	ND	ND
1,4-DICHLOROBENZENE	38 J	ND	ND	ND	ND	ND
1,4-DIOXANE	ND	ND	ND	ND	ND	ND
2-BUTANONE	ND	ND	ND	ND	ND	ND
2-HEXANONE	ND	ND	ND	ND	ND	ND
4-ETHYLTOLUENE	67	ND	56 J	6	ND	ND
4-METHYL-2-PENTANONE	ND	ND	ND	ND	ND	ND
ACETONE	710	ND	200 J	ND	39	ND
BENZENE	130	ND	75 J	3 J	ND	ND
BENZYL CHLORIDE	ND	ND	ND	ND	ND	ND
BROMODICHLOROMETHANE	ND	ND	ND	ND	ND	ND
BROMOFORM	ND	ND	ND	ND	ND	ND
BROMOMETHANE	ND	ND	ND	ND	ND	ND
CARBON DISULFIDE	10 J	ND	ND	ND	ND	ND
CARBON TETRACHLORIDE	ND	ND	ND	ND	ND	ND
CHLOROBENZENE	ND	ND	ND	ND	ND	ND
CHLOROETHANE	170	ND	140 J	ND	ND	ND
CHLOROFORM	ND	ND	ND	ND	ND	ND
CHLOROMETHANE	10 J	ND	5 J	ND	2 J	ND
CIS-1,2-DICHLOROETHENE	30	ND	44 J	ND	ND	ND
CIS-1,3-DICHLOROPROPENE	ND	ND	ND	ND	ND	ND

APPENDIX C
QUARTERLY ANALYTICAL RESULTS (Continued)

Parcel E Nonstandard Data Gaps Investigation, Landfill Gas Characterization, Hunters Point Shipyard, San Francisco, California

Sample Location ID	SG26A	SG27A	SG27B	UCSF LIGHT	UCSF LIGHT	UCSF LIGHT
Sample ID	SG26SG001	SG27SG001	SG27SG002	SGLPSG001	SGLPSG002	SGLPSG003
Sample Date	04/03/2002	04/03/2002	04/03/2002	04/05/2002	08/01/2002	11/13/2002
EPA TO-14 VOA (µg/m3)						
CYCLOHEXANE	460	ND	580 J	ND	ND	ND
DIBROMOCHLOROMETHANE	ND	ND	ND	ND	ND	ND
DICHLORODIFLUOROMETHANE	170	31	62 J	ND	6 J	ND
ETHANOL	49	ND	4 J	ND	ND	ND
ETHYLBENZENE	130	ND	38 J	4 J	ND	ND
HEPTANE	500	ND	480 J	ND	ND	ND
HEXACHLOROBUTADIENE	49 J	ND	36 J	ND	ND	ND
HEXANE	NA	NA	NA	NA	4 J	ND
ISOPROPYL ALCOHOL	ND	ND	ND	ND	ND	ND
M,P-XYLENES	600	ND	240 J	ND	6 J	3 J
METHYLENE CHLORIDE	ND	ND	ND	ND	ND	ND
N-HEXANE	890	ND	780 J	ND	NA	NA
O-XYLENE	480	ND	260 J	4 J	ND	ND
PROPYLENE	910	ND	70 J	ND	4	ND
STYRENE	15 J	ND	7 J	ND	ND	ND
TERT-BUTYL METHYL ETHER	ND	ND	ND	ND	ND	ND
TETRACHLOROETHENE	46 J	ND	ND	ND	ND	ND
TETRAHYDROFURAN	ND	ND	ND	ND	ND	ND
TOLUENE	180	ND	32 J	ND	5 J	ND
TRANS-1,2-DICHLOROETHENE	ND	ND	ND	ND	ND	ND
TRANS-1,3-DICHLOROPROPENE	ND	ND	ND	ND	ND	ND
TRICHLOROETHENE	33 J	ND	13 J	ND	ND	ND
TRICHLOROFLUOROMETHANE	ND	ND	ND	ND	ND	ND
VINYL ACETATE	ND	ND	ND	ND	ND	ND
VINYL CHLORIDE	30	ND	13 J	ND	ND	ND
EPA 3C Landfill Gas (%)						
CARBON DIOXIDE	14	6	21	ND	ND	ND
CARBON MONOXIDE	ND	ND	ND	ND	ND	ND
METHANE	36	ND	50 J	ND	ND	ND
NITROGEN	41	92 J	24	81	80	82
OXYGEN	11	ND	2	19 J	20	18
EPA 25C Total Nonmethane Organic Carbon ppmv)						
METHANE	360,000 J	ND	500,000 J	ND	300	ND
NONMETHANE ORGANIC CARBON	79	ND	120	ND	0.2	5

APPENDIX C
QUARTERLY ANALYTICAL RESULTS (Continued)

Parcel E Nonstandard Data Gaps Investigation, Landfill Gas Characterization, Hunters Point Shipyard, San Francisco, California

Sample Location ID	GMP01	GMP01	GMP01	GMP01	GMP01A
Sample ID	GMP01SG001	GMP01SG002	GMP01SG003	GMP01SG004	GMP01ASG001
Sample Date	04/22/2002	05/22/2002	05/22/2002	07/31/2002	11/13/2002
EPA TO-14 VOA (µg/m3)					
1,1,1-TRICHLOROETHANE	ND	ND	ND	ND	ND
1,1,2,2-TETRACHLOROETHANE	ND	ND	ND	ND	ND
1,1,2-TRICHLORO-1,2,2-TRIFLUOROETHANE	ND	ND	ND	ND	ND
1,1,2-TRICHLOROETHANE	ND	ND	ND	ND	ND
1,1-DICHLOROETHANE	59 J	41 J	49 J	74	22 J
1,1-DICHLOROETHENE	ND	ND	ND	ND	ND
1,2,4-TRICHLOROBENZENE	ND	ND	ND	ND	ND
1,2,4-TRIMETHYLBENZENE	6,700 J	2,600 J	1,900 J	180	ND
1,2-DIBROMOETHANE	ND	ND	ND	ND	ND
1,2-DICHLORO-1,1,2,2-TETRAFLUOROETHANE	260 J	71 J	71 J	270	64 J
1,2-DICHLOROBENZENE	ND	17 J	18 J	20	9 J
1,2-DICHLOROETHANE	14 J	20 J	ND	11	ND
1,2-DICHLOROPROPANE	ND	12 J	ND	ND	ND
1,3,5-TRIMETHYLBENZENE	1,700 J	1,100 J	800 J	160	ND
1,3-BUTADIENE	ND	ND	ND	ND	ND
1,3-DICHLOROBENZENE	ND	40 J	51 J	49	33 J
1,4-DICHLOROBENZENE	ND	480 J	530 J	670	300 J
1,4-DIOXANE	ND	ND	ND	ND	ND
2-BUTANONE	ND	ND	ND	ND	ND
2-HEXANONE	ND	ND	ND	ND	ND
4-ETHYLTOLUENE	1,100 J	930 J	660 J	110	ND
4-METHYL-2-PENTANONE	ND	ND	ND	ND	ND
ACETONE	ND	ND	ND	ND	ND
BENZENE	330 J	550 J	420 J	320	13 J
BENZYL CHLORIDE	ND	ND	ND	ND	ND
BROMODICHLOROMETHANE	ND	ND	ND	ND	ND
BROMOFORM	ND	ND	ND	ND	ND
BROMOMETHANE	ND	ND	ND	ND	ND
CARBON DISULFIDE	19 J	8 J	ND	ND	ND
CARBON TETRACHLORIDE	ND	ND	ND	ND	ND
CHLOROBENZENE	1,200 J	2,300 J	2,000 J	1,600	120 J
CHLOROETHANE	170 J	78 J	70 J	160	8 J
CHLOROFORM	ND	ND	ND	ND	ND
CHLOROMETHANE	ND	15 J	ND	ND	ND
CIS-1,2-DICHLOROETHENE	24 J	28 J	25 J	40	ND
CIS-1,3-DICHLOROPROPENE	ND	ND	ND	ND	ND

APPENDIX C
QUARTERLY ANALYTICAL RESULTS (Continued)

Parcel E Nonstandard Data Gaps Investigation, Landfill Gas Characterization, Hunters Point Shipyard, San Francisco, California

Sample Location ID	GMP01	GMP01	GMP01	GMP01	GMP01A
Sample ID	GMP01SG001	GMP01SG002	GMP01SG003	GMP01SG004	GMP01ASG001
Sample Date	04/22/2002	05/22/2002	05/22/2002	07/31/2002	11/13/2002
EPA TO-14 VOA (µg/m3)					
CYCLOHEXANE	1,800 J	2,200 J	2,100 J	980	63 J
DIBROMOCHLOROMETHANE	ND	ND	ND	ND	ND
DICHLORODIFLUOROMETHANE	500 J	120 J	170 J	4,200 J	290 J
ETHANOL	ND	ND	ND	ND	ND
ETHYLBENZENE	150 J	880 J	570 J	75	14 J
HEPTANE	1,600 J	2,600 J	2,100 J	870	54 J
HEXACHLOROBUTADIENE	ND	ND	ND	ND	ND
HEXANE	1,700 J	2,200 J	2,000 J	1,500	180 J
ISOPROPYL ALCOHOL	ND	ND	ND	45	ND
M,P-XYLENES	580 J	480 J	310 J	ND	14 J
METHYLENE CHLORIDE	ND	ND	ND	ND	ND
O-XYLENE	86 J	130 J	97 J	25	14 J
PROPYLENE	2,300 J	560 J	580 J	980	300 J
STYRENE	ND	10 J	ND	ND	ND
TERT-BUTYL METHYL ETHER	ND	ND	ND	ND	ND
TETRACHLOROETHENE	ND	21 J	17 J	10 J	14 J
TETRAHYDROFURAN	24 J	ND	ND	23	ND
TOLUENE	470 J	210 J	130 J	ND	18 J
TRANS-1,2-DICHLOROETHENE	40 J	44 J	40 J	80	ND
TRANS-1,3-DICHLOROPROPENE	ND	ND	ND	ND	ND
TRICHLOROETHENE	ND	29 J	23 J	21	7 J
TRICHLOROFLUOROMETHANE	ND	ND	ND	ND	ND
VINYL ACETATE	ND	ND	ND	ND	ND
VINYL CHLORIDE	190 J	68 J	55 J	180	15 J
EPA 3C Landfill Gas (%)					
CARBON DIOXIDE	22	26	26	28	12
CARBON MONOXIDE	ND	ND	ND	ND	ND
METHANE	33	30	28	45	4
NITROGEN	45	43	45	26	83
OXYGEN	ND	0.9	0.7	0.7	1
EPA 25C Total Nonmethane Organic Carbon (ppmv)					
METHANE	350,000 J	NA	NA	NA	NA
NONMETHANE ORGANIC CARBON	39	57	58	26	32

APPENDIX C
QUARTERLY ANALYTICAL RESULTS (Continued)

Parcel E Nonstandard Data Gaps Investigation, Landfill Gas Characterization, Hunters Point Shipyard, San Francisco, California

Sample Location ID	GMP02	GMP02	GMP02	GMP02A	GMP02A
Sample ID	GMP02SG001	GMP02SG002	GMP02SG003	GMP02ASG001	GMP02ASG002
Sample Date	04/22/2002	05/22/2002	07/31/2002	11/13/2002	11/13/2002
EPA TO-14 VOA (µg/m3)					
1,1,1-TRICHLOROETHANE	ND	13 J	ND	ND	ND
1,1,2,2-TETRACHLOROETHANE	ND	ND	ND	70 J	ND
1,1,2-TRICHLORO-1,2,2-TRIFLUOROETHANE	ND	ND	ND	ND	ND
1,1,2-TRICHLOROETHANE	ND	ND	ND	ND	ND
1,1-DICHLOROETHANE	ND	26 J	17	7 J	7 J
1,1-DICHLOROETHENE	ND	12 J	ND	ND	ND
1,2,4-TRICHLOROBENZENE	ND	ND	ND	ND	ND
1,2,4-TRIMETHYLBENZENE	ND	100 J	1,600	46 J	46 J
1,2-DIBROMOETHANE	ND	13 J	ND	ND	ND
1,2-DICHLORO-1,1,2,2-TETRAFLUOROETHANE	610 J	640 J	1,100	78 J	78 J
1,2-DICHLOROBENZENE	ND	35 J	13 J	16 J	16 J
1,2-DICHLOROETHANE	ND	23 J	12	ND	ND
1,2-DICHLOROPROPANE	ND	ND	ND	ND	ND
1,3,5-TRIMETHYLBENZENE	ND	60 J	75	44 J	44 J
1,3-BUTADIENE	ND	ND	ND	ND	ND
1,3-DICHLOROBENZENE	ND	26 J	9 J	ND	ND
1,4-DICHLOROBENZENE	ND	160 J	140 J	31 J	38 J
1,4-DIOXANE	ND	ND	ND	ND	ND
2-BUTANONE	ND	ND	ND	ND	ND
2-HEXANONE	ND	ND	ND	ND	ND
4-ETHYLTOLUENE	ND	29 J	29 J	ND	9 J
4-METHYL-2-PENTANONE	ND	ND	ND	ND	ND
ACETONE	ND	ND	ND	ND	ND
BENZENE	210 J	240 J	190	19 J	19 J
BENZYL CHLORIDE	ND	ND	ND	ND	ND
BROMODICHLOROMETHANE	ND	ND	ND	ND	ND
BROMOFORM	ND	ND	ND	ND	ND
BROMOMETHANE	ND	10 J	ND	ND	ND
CARBON DISULFIDE	240 J	32 J	ND	57 J	73 J
CARBON TETRACHLORIDE	ND	11 J	ND	ND	ND
CHLOROBENZENE	520 J	750 J	940 J	ND	ND
CHLOROETHANE	200 J	250 J	180	14 J	14 J
CHLOROFORM	ND	8 J	ND	ND	ND
CHLOROMETHANE	ND	ND	ND	71 J	74 J
CIS-1,2-DICHLOROETHENE	36 J	40 J	34	ND	4 J
CIS-1,3-DICHLOROPROPENE	ND	ND	ND	ND	ND

APPENDIX C
QUARTERLY ANALYTICAL RESULTS (Continued)

Parcel E Nonstandard Data Gaps Investigation, Landfill Gas Characterization, Hunters Point Shipyard, San Francisco, California

Sample Location ID	GMP02	GMP02	GMP02	GMP02A	GMP02A
Sample ID	GMP02SG001	GMP02SG002	GMP02SG003	GMP02ASG001	GMP02ASG002
Sample Date	04/22/2002	05/22/2002	07/31/2002	11/13/2002	11/13/2002
EPA TO-14 VOA (µg/m3)					
CYCLOHEXANE	2,700 J	2,800 J	1,400	180 J	180 J
DIBROMOCHLOROMETHANE	ND	ND	ND	ND	ND
DICHLORODIFLUOROMETHANE	610 J	600 J	1,500	220 J	220 J
ETHANOL	260 J	ND	ND	ND	ND
ETHYLBENZENE	41 J	57 J	29 J	11 J	13 J
HEPTANE	3,000 J	3,100 J	2,100	210 J	220 J
HEXACHLOROBUTADIENE	ND	38 J	ND	ND	ND
HEXANE	3,100 J	2,900 J	2,600	320 J	340 J
ISOPROPYL ALCOHOL	67 J	ND	ND	ND	ND
M,P-XYLENES	100 J	180 J	ND	53 J	57 J
METHYLENE CHLORIDE	ND	ND	53	ND	ND
O-XYLENE	41 J	70 J	43	48 J	53 J
PROPYLENE	4,200 J	3,200 J	1,100	3,300	2,500
STYRENE	ND	ND	ND	ND	ND
TERT-BUTYL METHYL ETHER	ND	ND	ND	ND	ND
TETRACHLOROETHENE	ND	21 J	6 J	19 J	21 J
TETRAHYDROFURAN	ND	ND	ND	ND	ND
TOLUENE	36 J	ND	ND	ND	ND
TRANS-1,2-DICHLOROETHENE	ND	18 J	12	ND	ND
TRANS-1,3-DICHLOROPROPENE	ND	ND	ND	ND	ND
TRICHLOROETHENE	ND	22 J	11	7 J	8 J
TRICHLOROFLUOROMETHANE	ND	14 J	ND	ND	ND
VINYL ACETATE	ND	ND	ND	ND	ND
VINYL CHLORIDE	39 J	47 J	31	4 J	4 J
EPA 3C Landfill Gas (%)					
CARBON DIOXIDE	23	28	29	9	9
CARBON MONOXIDE	ND	ND	ND	ND	ND
METHANE	58	56	60	2	2
NITROGEN	17	15	10	88	88
OXYGEN	2	1	1	2	2
EPA 25C Total Nonmethane Organic Carbon (ppmv)					
METHANE	610,000 J	NA	NA	NA	NA
NONMETHANE ORGANIC CARBON	72	110	67	44	48

APPENDIX C
QUARTERLY ANALYTICAL RESULTS (Continued)

Parcel E Nonstandard Data Gaps Investigation, Landfill Gas Characterization, Hunters Point Shipyard, San Francisco, California

Sample Location ID	GMP03	GMP03	GMP03	GMP03	GMP04	GMP04	GMP04
Sample ID	GMP03SG001	GMP03SG002	GMP03SG003	GMP03SG004	GMP04SG001	GMP04SG002	GMP04SG003
Sample Date	04/22/2002	05/22/2002	05/22/2002	07/31/2002	04/22/2002	05/22/2002	07/31/2002
EPA TO-14 VOA (µg/m3)							
1,1,1-TRICHLOROETHANE	ND	30 J	52 J	ND	ND	ND	ND
1,1,2,2-TETRACHLOROETHANE	ND	ND	ND	ND	ND	ND	ND
1,1,2-TRICHLORO-1,2,2-TRIFLUOROETHANE	ND	ND	ND	ND	ND	ND	ND
1,1,2-TRICHLOROETHANE	ND	ND	ND	ND	ND	ND	ND
1,1-DICHLOROETHANE	26 J	41 J	58 J	22	ND	45 J	26
1,1-DICHLOROETHENE	ND	28 J	44 J	ND	ND	21 J	ND
1,2,4-TRICHLOROBENZENE	ND	34 J	40 J	ND	ND	ND	ND
1,2,4-TRIMETHYLBENZENE	ND	100 J	110 J	ND	ND	40 J	36
1,2-DIBROMOETHANE	ND	34 J	51 J	ND	ND	24 J	ND
1,2-DICHLORO-1,1,2,2-TETRAFLUOROETHANE	740 J	780 J	850 J	520	1,700	1,500 J	640
1,2-DICHLOROBENZENE	ND	51 J	60 J	10	ND	36 J	21
1,2-DICHLOROETHANE	16 J	23 J	45 J	ND	ND	14 J	6 J
1,2-DICHLOROPROPANE	ND	ND	ND	ND	ND	ND	ND
1,3,5-TRIMETHYLBENZENE	ND	90 J	110 J	32	ND	28 J	15
1,3-BUTADIENE	ND	ND	ND	ND	ND	ND	ND
1,3-DICHLOROBENZENE	ND	42 J	54 J	9 J	ND	23 J	8 J
1,4-DICHLOROBENZENE	ND	170 J	180 J	130	ND	130 J	220
1,4-DIOXANE	ND	ND	ND	ND	ND	ND	ND
2-BUTANONE	ND	ND	ND	ND	ND	ND	ND
2-HEXANONE	ND	ND	ND	ND	ND	ND	ND
4-ETHYLTOLUENE	ND	37 J	49 J	9	ND	23 J	12
4-METHYL-2-PENTANONE	ND	ND	ND	ND	ND	ND	ND
ACETONE	ND	ND	ND	ND	ND	ND	ND
BENZENE	350 J	310 J	330 J	160	330	330 J	220
BENZYL CHLORIDE	ND	ND	ND	ND	ND	ND	ND
BROMODICHLOROMETHANE	ND	ND	ND	ND	ND	ND	ND
BROMOFORM	ND	ND	ND	ND	ND	ND	ND
BROMOMETHANE	ND	25 J	43 J	ND	ND	18 J	ND
CARBON DISULFIDE	82 J	38 J	47 J	ND	150	44 J	ND
CARBON TETRACHLORIDE	ND	28 J	45 J	ND	ND	20 J	ND
CHLOROBENZENE	1,400 J	1,400 J	1,400 J	1,400	300	300 J	370
CHLOROETHANE	140 J	170 J	190 J	110	150	150 J	67
CHLOROFORM	ND	27 J	39 J	ND	ND	15 J	ND
CHLOROMETHANE	ND	ND	25 J	ND	ND	ND	ND
CIS-1,2-DICHLOROETHENE	35 J	52 J	60 J	39	60	68 J	52
CIS-1,3-DICHLOROPROPENE	ND	18 J	28 J	ND	ND	12 J	ND

APPENDIX C
QUARTERLY ANALYTICAL RESULTS (Continued)

Parcel E Nonstandard Data Gaps Investigation, Landfill Gas Characterization, Hunters Point Shipyard, San Francisco, California

Sample Location ID	GMP03	GMP03	GMP03	GMP03	GMP04	GMP04	GMP04
Sample ID	GMP03SG001	GMP03SG002	GMP03SG003	GMP03SG004	GMP04SG001	GMP04SG002	GMP04SG003
Sample Date	04/22/2002	05/22/2002	05/22/2002	07/31/2002	04/22/2002	05/22/2002	07/31/2002
EPA TO-14 VOA (µg/m3)							
CYCLOHEXANE	3,000 J	3,000 J	3,100 J	910	2,500	1,700 J	700
DIBROMOCHLOROMETHANE	ND	ND	ND	ND	ND	26 J	ND
DICHLORODIFLUOROMETHANE	2,800 J	1,700 J	1,700 J	160	170	210 J	91
ETHANOL	1,700 J	ND	ND	ND	ND	ND	ND
ETHYLBENZENE	34 J	44 J	53 J	ND	30 J	42 J	ND
HEPTANE	3,300 J	3,200 J	3,200 J	1,700	2,200	1,700 J	920
HEXACHLOROBUTADIENE	ND	76 J	98 J	ND	ND	47 J	ND
HEXANE	3,400 J	2,900 J	2,900 J	3,000 J	1,700	1,400 J	1,100
ISOPROPYL ALCOHOL	470 J	ND	ND	ND	120	ND	6
M,P-XYLENES	76 J	100 J	130 J	ND	90	84 J	ND
METHYLENE CHLORIDE	ND	ND	ND	ND	ND	ND	110
O-XYLENE	36 J	48 J	57 J	ND	42 J	53 J	29
PROPYLENE	5,400 J	4,700 J	4,600 J	420	4,500	3,000 J	250
STYRENE	ND	ND	ND	ND	ND	ND	ND
TERT-BUTYL METHYL ETHER	ND	ND	ND	ND	ND	ND	ND
TETRACHLOROETHENE	ND	44 J	59 J	8 J	37 J	66 J	30
TETRAHYDROFURAN	ND	ND	ND	ND	ND	ND	ND
TOLUENE	ND	ND	ND	ND	38 J	ND	ND
TRANS-1,2-DICHLOROETHENE	14 J	37 J	48 J	19	ND	27 J	8
TRANS-1,3-DICHLOROPROPENE	ND	14 J	22 J	ND	ND	10 J	ND
TRICHLOROETHENE	ND	45 J	66 J	19	60 J	77 J	52
TRICHLOROFLUOROMETHANE	ND	37 J	56 J	ND	ND	39 J	6 J
VINYL ACETATE	ND	ND	ND	ND	ND	ND	ND
VINYL CHLORIDE	170 J	180 J	190 J	88	120	140 J	55
EPA 3C Landfill Gas (%)							
CARBON DIOXIDE	24	28	28	30	23	26	28
CARBON MONOXIDE	ND	ND	ND	ND	ND	ND	ND
METHANE	64	60	61	64	62	52	46
NITROGEN	11	11	10	6	13	19	25
OXYGEN	1	1	0.7	0.3	1	2	0.5
EPA 25C Total Nonmethane Organic Carbon (ppmv)							
METHANE	670,000 J	NA	NA	NA	650,000 J	NA	NA
NONMETHANE ORGANIC CARBON	94	140	140	120	200	230	130

APPENDIX C
QUARTERLY ANALYTICAL RESULTS (Continued)

Parcel E Nonstandard Data Gaps Investigation, Landfill Gas Characterization, Hunters Point Shipyard, San Francisco, California

Sample Location ID	GMP04A	GMP04A	GMP05	GMP05	GMP05	GMP05
Sample ID	GMP04ASG001	GMP04ASG002	GMP05SG001	GMP05SG002	GMP05MER001	GMP05SG003
Sample Date	11/13/2002	11/13/2002	04/22/2002	05/22/2002	06/05/2002	07/31/2002
EPA TO-14 VOA (µg/m3)						
1,1,1-TRICHLOROETHANE	ND	ND	ND	27 J	NA	ND
1,1,2,2-TETRACHLOROETHANE	ND	ND	ND	ND	NA	ND
1,1,2-TRICHLORO-1,2,2-TRIFLUOROETHANE	ND	ND	ND	ND	NA	ND
1,1,2-TRICHLOROETHANE	ND	ND	ND	ND	NA	ND
1,1-DICHLOROETHANE	8	7	120	120 J	NA	200
1,1-DICHLOROETHENE	ND	ND	ND	25 J	NA	ND
1,2,4-TRICHLOROBENZENE	ND	ND	ND	39 J	NA	ND
1,2,4-TRIMETHYLBENZENE	4 J	ND	ND	25 J	NA	44
1,2-DIBROMOETHANE	ND	ND	ND	37 J	NA	ND
1,2-DICHLORO-1,1,2,2-TETRAFLUOROETHANE	200	210	910	540 J	NA	520
1,2-DICHLOROBENZENE	11	12	ND	37 J	NA	ND
1,2-DICHLOROETHANE	ND	ND	ND	23 J	NA	4 J
1,2-DICHLOROPROPANE	ND	ND	ND	ND	NA	ND
1,3,5-TRIMETHYLBENZENE	ND	ND	ND	23 J	NA	13
1,3-BUTADIENE	ND	ND	ND	ND	NA	ND
1,3-DICHLOROBENZENE	ND	ND	ND	32 J	NA	ND
1,4-DICHLOROBENZENE	120	120	ND	38 J	NA	10 J
1,4-DIOXANE	ND	ND	ND	ND	NA	ND
2-BUTANONE	ND	ND	ND	ND	NA	ND
2-HEXANONE	ND	ND	ND	ND	NA	ND
4-ETHYLTOLUENE	ND	ND	ND	19 J	NA	6 J
4-METHYL-2-PENTANONE	ND	ND	ND	ND	NA	ND
ACETONE	ND	ND	ND	ND	NA	ND
BENZENE	7	7	43 J	30 J	NA	32
BENZYL CHLORIDE	ND	ND	ND	ND	NA	ND
BROMODICHLOROMETHANE	ND	ND	ND	ND	NA	ND
BROMOFORM	ND	ND	ND	ND	NA	ND
BROMOMETHANE	ND	ND	ND	17 J	NA	ND
CARBON DISULFIDE	31	ND	76	700 J	NA	ND
CARBON TETRACHLORIDE	ND	ND	ND	25 J	NA	ND
CHLOROBENZENE	ND	ND	ND	ND	NA	ND
CHLOROETHANE	ND	ND	4,300	3,200 J	NA	4,000 J
CHLOROFORM	ND	ND	ND	ND	NA	ND
CHLOROMETHANE	ND	ND	ND	ND	NA	90
CIS-1,2-DICHLOROETHENE	ND	ND	30 J	32 J	NA	68
CIS-1,3-DICHLOROPROPENE	ND	ND	ND	19 J	NA	ND

APPENDIX C
QUARTERLY ANALYTICAL RESULTS (Continued)

Parcel E Nonstandard Data Gaps Investigation, Landfill Gas Characterization, Hunters Point Shipyard, San Francisco, California

Sample Location ID	GMP04A	GMP04A	GMP05	GMP05	GMP05	GMP05
Sample ID	GMP04ASG001	GMP04ASG002	GMP05SG001	GMP05SG002	GMP05MER001	GMP05SG003
Sample Date	11/13/2002	11/13/2002	04/22/2002	05/22/2002	06/05/2002	07/31/2002
EPA TO-14 VOA (µg/m3)						
CYCLOHEXANE	38	42	2,500	1,500 J	NA	250
DIBROMOCHLOROMETHANE	ND	ND	ND	41 J	NA	ND
DICHLORODIFLUOROMETHANE	240	230	600	390 J	NA	130
ETHANOL	9,900	ND	81	ND	NA	ND
ETHYLBENZENE	7	5 J	ND	24 J	NA	ND
HEPTANE	26	30	1,300	830 J	NA	130
HEXACHLOROBUTADIENE	ND	ND	ND	86 J	NA	ND
HEXANE	39	36	1,900	1,100 J	NA	1,100
ISOPROPYL ALCOHOL	220	ND	ND	ND	NA	ND
M,P-XYLENES	12	12	39 J	ND	NA	ND
METHYLENE CHLORIDE	ND	ND	ND	ND	NA	46
O-XYLENE	8	7	18 J	24 J	NA	ND
PROPYLENE	81	93	2,100	1,800 J	NA	ND
STYRENE	ND	ND	ND	ND	NA	ND
T-BUTYL MERCAPTAN	NA	NA	NA	NA	56	NA
TERT-BUTYL METHYL ETHER	ND	ND	ND	ND	NA	ND
TETRACHLOROETHENE	37	37	ND	39 J	NA	10 J
TETRAHYDROFURAN	ND	ND	ND	ND	NA	ND
TETRAHYDROTHIOPHENE	NA	NA	NA	NA	ND	NA
TOLUENE	ND	ND	ND	ND	NA	ND
TRANS-1,2-DICHLOROETHENE	ND	ND	15 J	26 J	NA	25
TRANS-1,3-DICHLOROPROPENE	ND	ND	ND	ND	NA	ND
TRICHLOROETHENE	21	22	25 J	41 J	NA	27
TRICHLOROFLUOROMETHANE	97	91	ND	29 J	NA	ND
VINYL ACETATE	ND	ND	ND	ND	NA	ND
VINYL CHLORIDE	ND	ND	220	140 J	NA	160
EPA 3C Landfill Gas (%)						
CARBON DIOXIDE	11	11	18	18	NA	29
CARBON MONOXIDE	ND	ND	ND	ND	NA	ND
METHANE	0.1 J	ND	51	30	NA	41
NITROGEN	88	87	29	52	NA	30
OXYGEN	1	2	2	ND	NA	0.6
EPA 25C Total Nonmethane Organic Carbon (ppmv)						
METHANE	940	950	540,000 J	NA	NA	NA

APPENDIX C
QUARTERLY ANALYTICAL RESULTS (Continued)

Parcel E Nonstandard Data Gaps Investigation, Landfill Gas Characterization, Hunters Point Shipyard, San Francisco, California

Sample Location ID	GMP04A	GMP04A	GMP05	GMP05	GMP05	GMP05
Sample ID	GMP04ASG001	GMP04ASG002	GMP05SG001	GMP05SG002	GMP05MER001	GMP05SG003
Sample Date	11/13/2002	11/13/2002	04/22/2002	05/22/2002	06/05/2002	07/31/2002
EPA 25C Total Nonmethane Organic Carbon (ppmv)						
NONMETHANE ORGANIC CARBON	8	2	210	160	NA	210

APPENDIX C
QUARTERLY ANALYTICAL RESULTS (Continued)

Parcel E Nonstandard Data Gaps Investigation, Landfill Gas Characterization, Hunters Point Shipyard, San Francisco, California

Sample Location ID	GMP06	GMP06	GMP06	GMP06
Sample ID	GMP06SG001	GMP06SG002	GMP06MER001	GMP06SG003
Sample Date	04/22/2002	05/22/2002	06/05/2002	07/31/2002
EPA TO-14 VOA (µg/m3)				
1,1,1-TRICHLOROETHANE	ND	46 J	NA	ND
1,1,2,2-TETRACHLOROETHANE	ND	ND	NA	ND
1,1,2-TRICHLORO-1,2,2-TRIFLUOROETHANE	ND	ND	NA	ND
1,1,2-TRICHLOROETHANE	ND	ND	NA	ND
1,1-DICHLOROETHANE	24 J	62 J	NA	35
1,1-DICHLOROETHENE	ND	34 J	NA	ND
1,2,4-TRICHLOROBENZENE	ND	ND	NA	ND
1,2,4-TRIMETHYLBENZENE	11 J	40 J	NA	36
1,2-DIBROMOETHANE	ND	48 J	NA	ND
1,2-DICHLORO-1,1,2,2-TETRAFLUOROETHANE	930 J	1,400 J	NA	920
1,2-DICHLOROBENZENE	ND	ND	NA	ND
1,2-DICHLOROETHANE	ND	ND	NA	ND
1,2-DICHLOROPROPANE	ND	ND	NA	ND
1,3,5-TRIMETHYLBENZENE	8 J	41 J	NA	12
1,3-BUTADIENE	ND	ND	NA	ND
1,3-DICHLOROBENZENE	ND	ND	NA	ND
1,4-DICHLOROBENZENE	ND	ND	NA	ND
1,4-DIOXANE	ND	ND	NA	ND
2-BUTANONE	ND	ND	NA	ND
2-HEXANONE	ND	ND	NA	ND
4-ETHYLTOLUENE	ND	26 J	NA	ND
4-METHYL-2-PENTANONE	ND	ND	NA	ND
ACETONE	ND	ND	NA	ND
BENZENE	17 J	36 J	NA	8
BENZYL CHLORIDE	ND	ND	NA	ND
BROMODICHLOROMETHANE	ND	ND	NA	ND
BROMOFORM	ND	81 J	NA	ND
BROMOMETHANE	ND	32 J	NA	ND
CARBON DISULFIDE	7 J	32 J	NA	ND
CARBON TETRACHLORIDE	ND	42 J	NA	ND
CHLOROBENZENE	ND	ND	NA	ND
CHLOROETHANE	20 J	56 J	NA	18
CHLOROFORM	ND	33 J	NA	ND
CHLOROMETHANE	ND	ND	NA	ND
CIS-1,2-DICHLOROETHENE	20 J	44 J	NA	22
CIS-1,3-DICHLOROPROPENE	ND	25 J	NA	ND

APPENDIX C
QUARTERLY ANALYTICAL RESULTS (Continued)

Parcel E Nonstandard Data Gaps Investigation, Landfill Gas Characterization, Hunters Point Shipyard, San Francisco, California

Sample Location ID	GMP06	GMP06	GMP06	GMP06
Sample ID	GMP06SG001	GMP06SG002	GMP06MER001	GMP06SG003
Sample Date	04/22/2002	05/22/2002	06/05/2002	07/31/2002
EPA TO-14 VOA (µg/m3)				
CYCLOHEXANE	990 J	1,100 J	NA	660
DIBROMOCHLOROMETHANE	ND	54 J	NA	ND
DICHLORODIFLUOROMETHANE	150 J	220 J	NA	110
ETHANOL	ND	ND	NA	ND
ETHYLBENZENE	7 J	34 J	NA	ND
HEPTANE	230 J	310 J	NA	280
HEXACHLOROBUTADIENE	42 J	98 J	NA	ND
HEXANE	1,200 J	1,100 J	NA	1,100
ISOPROPYL ALCOHOL	ND	ND	NA	ND
M,P-XYLENES	14 J	66 J	NA	ND
METHYLENE CHLORIDE	ND	ND	NA	ND
O-XYLENE	9 J	35 J	NA	ND
PROPYLENE	410 J	560 J	NA	ND
STYRENE	ND	ND	NA	ND
T-BUTYL MERCAPTAN	NA	NA	1,500 J	NA
TERT-BUTYL METHYL ETHER	ND	ND	NA	ND
TETRACHLOROETHENE	ND	52 J	NA	ND
TETRAHYDROFURAN	ND	ND	NA	ND
TETRAHYDROTHIOPHENE	NA	NA	ND	NA
TOLUENE	ND	ND	NA	ND
TRANS-1,2-DICHLOROETHENE	ND	32 J	NA	6 J
TRANS-1,3-DICHLOROPROPENE	ND	24 J	NA	ND
TRICHLOROETHENE	15 J	48 J	NA	9 J
TRICHLOROFLUOROMETHANE	ND	49 J	NA	ND
VINYL ACETATE	ND	ND	NA	ND
VINYL CHLORIDE	24 J	52 J	NA	23
EPA 3C Landfill Gas (%)				
CARBON DIOXIDE	19	22	NA	22
CARBON MONOXIDE	ND	ND	NA	ND
METHANE	69	61	NA	49
NITROGEN	10	17	NA	28
OXYGEN	0.7	0.5	NA	0.5
EPA 25C Total Nonmethane Organic Carbon (ppmv)				
METHANE	730,000 J	NA	NA	NA

APPENDIX C
QUARTERLY ANALYTICAL RESULTS (Continued)

Parcel E Nonstandard Data Gaps Investigation, Landfill Gas Characterization, Hunters Point Shipyard, San Francisco, California

Sample Location ID	GMP06	GMP06	GMP06	GMP06
Sample ID	GMP06SG001	GMP06SG002	GMP06MER001	GMP06SG003
Sample Date	04/22/2002	05/22/2002	06/05/2002	07/31/2002
EPA 25C Total Nonmethane Organic Carbon (ppmv)				
NONMETHANE ORGANIC CARBON	300	320	NA	210

APPENDIX C
QUARTERLY ANALYTICAL RESULTS (Continued)

Parcel E Nonstandard Data Gaps Investigation, Landfill Gas Characterization, Hunters Point Shipyard, San Francisco, California

Sample Location ID	GMP07	GMP07	GMP07	GMP07	GMP07A
Sample ID	GMP07SG001	GMP07SG002	GMP07SG003	GMP07SG004	GMP07ASG001
Sample Date	04/22/2002	04/22/2002	05/22/2002	07/31/2002	11/13/2002
EPA TO-14 VOA (µg/m3)					
1,1,1-TRICHLOROETHANE	ND	ND	25 J	ND	ND
1,1,2,2-TETRACHLOROETHANE	ND	ND	ND	ND	ND
1,1,2-TRICHLORO-1,2,2-TRIFLUOROETHANE	ND	ND	ND	ND	ND
1,1,2-TRICHLOROETHANE	ND	ND	ND	ND	ND
1,1-DICHLOROETHANE	13 J	ND	32 J	18	ND
1,1-DICHLOROETHENE	ND	ND	17 J	ND	ND
1,2,4-TRICHLOROBENZENE	ND	49 J	31 J	ND	ND
1,2,4-TRIMETHYLBENZENE	9 J	30 J	20 J	200	ND
1,2-DIBROMOETHANE	ND	ND	25 J	ND	ND
1,2-DICHLORO-1,1,2,2-TETRAFLUOROETHANE	1,200	1,300 J	1,400 J	1,100	120
1,2-DICHLOROBENZENE	ND	19 J	ND	ND	ND
1,2-DICHLOROETHANE	ND	ND	19 J	ND	ND
1,2-DICHLOROPROPANE	ND	ND	ND	ND	ND
1,3,5-TRIMETHYLBENZENE	ND	ND	24 J	65	ND
1,3-BUTADIENE	ND	ND	ND	ND	ND
1,3-DICHLOROBENZENE	ND	ND	ND	ND	ND
1,4-DICHLOROBENZENE	ND	ND	ND	ND	ND
1,4-DIOXANE	ND	11 J	ND	ND	ND
2-BUTANONE	ND	ND	ND	ND	ND
2-HEXANONE	ND	ND	ND	ND	ND
4-ETHYLTOLUENE	ND	14 J	19 J	21	ND
4-METHYL-2-PENTANONE	ND	ND	ND	ND	ND
ACETONE	ND	ND	ND	ND	ND
BENZENE	7 J	10 J	14 J	3 J	ND
BENZYL CHLORIDE	ND	ND	ND	ND	ND
BROMODICHLOROMETHANE	ND	ND	34 J	ND	ND
BROMOFORM	ND	ND	34 J	ND	ND
BROMOMETHANE	ND	ND	19 J	ND	ND
CARBON DISULFIDE	ND	11 J	24 J	ND	35
CARBON TETRACHLORIDE	ND	ND	22 J	ND	ND
CHLOROBENZENE	ND	ND	ND	ND	ND
CHLOROETHANE	6 J	ND	21 J	7	ND
CHLOROFORM	ND	ND	18 J	ND	ND
CHLOROMETHANE	ND	ND	ND	ND	ND
CIS-1,2-DICHLOROETHENE	ND	ND	18 J	5 J	ND
CIS-1,3-DICHLOROPROPENE	ND	ND	14 J	ND	ND

APPENDIX C
QUARTERLY ANALYTICAL RESULTS (Continued)

Parcel E Nonstandard Data Gaps Investigation, Landfill Gas Characterization, Hunters Point Shipyard, San Francisco, California

Sample Location ID	GMP07	GMP07	GMP07	GMP07	GMP07A
Sample ID	GMP07SG001	GMP07SG002	GMP07SG003	GMP07SG004	GMP07ASG001
Sample Date	04/22/2002	04/22/2002	05/22/2002	07/31/2002	11/13/2002
EPA TO-14 VOA (µg/m3)					
CYCLOHEXANE	500	640 J	520 J	420	5
DIBROMOCHLOROMETHANE	ND	ND	30 J	ND	ND
DICHLORODIFLUOROMETHANE	480	550 J	750 J	330	110
ETHANOL	ND	ND	ND	ND	ND
ETHYLBENZENE	6 J	ND	18 J	ND	ND
HEPTANE	65	110 J	67 J	62	13
HEXACHLOROBUTADIENE	ND	51 J	54 J	ND	ND
HEXANE	360	460 J	360 J	460	50
ISOPROPYL ALCOHOL	ND	ND	ND	32	ND
M,P-XYLENES	12 J	20 J	ND	ND	ND
METHYLENE CHLORIDE	ND	ND	ND	ND	ND
O-XYLENE	7 J	ND	17 J	ND	ND
PROPYLENE	ND	ND	100 J	ND	130
STYRENE	ND	ND	ND	ND	ND
TERT-BUTYL METHYL ETHER	ND	ND	ND	ND	ND
TETRACHLOROETHENE	ND	ND	30 J	ND	ND
TETRAHYDROFURAN	ND	ND	ND	ND	ND
TOLUENE	ND	ND	ND	ND	ND
TRANS-1,2-DICHLOROETHENE	ND	ND	16 J	ND	ND
TRANS-1,3-DICHLOROPROPENE	ND	ND	12 J	ND	ND
TRICHLOROETHENE	ND	ND	23 J	ND	ND
TRICHLOROFLUOROMETHANE	ND	ND	27 J	ND	5 J
VINYL ACETATE	ND	ND	ND	ND	ND
VINYL CHLORIDE	ND	11 J	20 J	6	ND
EPA 3C Landfill Gas (%)					
CARBON DIOXIDE	13	14	17	18	8
CARBON MONOXIDE	ND	ND	ND	ND	ND
METHANE	57	64	51	36	ND
NITROGEN	26	19	31	46	88
OXYGEN	5	3	0.7	0.5	3
EPA 25C Total Nonmethane Organic Carbon (ppmv)					
METHANE	600,000 J	670,000 J	NA	NA	420
NONMETHANE ORGANIC CARBON	120	130	140	53	14

APPENDIX C
QUARTERLY ANALYTICAL RESULTS (Continued)

Parcel E Nonstandard Data Gaps Investigation, Landfill Gas Characterization, Hunters Point Shipyard, San Francisco, California

Sample Location ID	GMP08	GMP08	GMP08	GMP08A
Sample ID	GMP08SG001	GMP08SG002	GMP08SG003	GMP08ASG001
Sample Date	04/22/2002	05/22/2002	07/31/2002	11/13/2002
EPA TO-14 VOA (µg/m3)				
1,1,1-TRICHLOROETHANE	27 J	22 J	14	ND
1,1,2,2-TETRACHLOROETHANE	ND	ND	ND	ND
1,1,2-TRICHLORO-1,2,2-TRIFLUOROETHANE	ND	ND	ND	ND
1,1,2-TRICHLOROETHANE	ND	ND	ND	ND
1,1-DICHLOROETHANE	ND	290 J	410	ND
1,1-DICHLOROETHENE	ND	14 J	4 J	ND
1,2,4-TRICHLOROBENZENE	ND	35 J	ND	ND
1,2,4-TRIMETHYLBENZENE	15,000 J	13,000 J	17,000	22 J
1,2-DIBROMOETHANE	ND	14 J	ND	ND
1,2-DICHLORO-1,1,2,2-TETRAFLUOROETHANE	1,100 J	1,400 J	1,100	250 J
1,2-DICHLOROBENZENE	ND	ND	ND	ND
1,2-DICHLOROETHANE	ND	62 J	ND	ND
1,2-DICHLOROPROPANE	ND	ND	ND	ND
1,3,5-TRIMETHYLBENZENE	5,800 J	6,000 J	9,000	4 J
1,3-BUTADIENE	ND	ND	ND	ND
1,3-DICHLOROBENZENE	ND	ND	ND	ND
1,4-DICHLOROBENZENE	ND	ND	ND	ND
1,4-DIOXANE	ND	ND	ND	ND
2-BUTANONE	ND	ND	ND	ND
2-HEXANONE	ND	ND	ND	ND
4-ETHYLTOLUENE	2,200 J	2,500 J	1,300	3 J
4-METHYL-2-PENTANONE	ND	ND	ND	ND
ACETONE	ND	ND	ND	ND
BENZENE	240 J	230 J	320	ND
BENZYL CHLORIDE	ND	ND	ND	ND
BROMODICHLOROMETHANE	ND	ND	ND	ND
BROMOFORM	ND	ND	ND	ND
BROMOMETHANE	ND	11 J	ND	ND
CARBON DISULFIDE	18 J	18 J	ND	ND
CARBON TETRACHLORIDE	ND	13 J	ND	ND
CHLOROBENZENE	ND	ND	ND	ND
CHLOROETHANE	5,500 J	6,700 J	7,200	480 J
CHLOROFORM	ND	11 J	ND	ND
CHLOROMETHANE	ND	ND	ND	ND
CIS-1,2-DICHLOROETHENE	29 J	26 J	32	ND
CIS-1,3-DICHLOROPROPENE	ND	ND	ND	ND

APPENDIX C
QUARTERLY ANALYTICAL RESULTS (Continued)

Parcel E Nonstandard Data Gaps Investigation, Landfill Gas Characterization, Hunters Point Shipyard, San Francisco, California

Sample Location ID	GMP08	GMP08	GMP08	GMP08A
Sample ID	GMP08SG001	GMP08SG002	GMP08SG003	GMP08ASG001
Sample Date	04/22/2002	05/22/2002	07/31/2002	11/13/2002
EPA TO-14 VOA (µg/m3)				
CYCLOHEXANE	3,100 J	3,500 J	3,800	490 J
DIBROMOCHLOROMETHANE	ND	19 J	ND	ND
DICHLORODIFLUOROMETHANE	ND	38 J	ND	ND
ETHANOL	130 J	ND	ND	ND
ETHYLBENZENE	200 J	210 J	240	4 J
HEPTANE	1,200 J	1,300 J	1,100	14 J
HEXACHLOROBUTADIENE	72 J	41 J	ND	ND
HEXANE	8,400 J	7,500 J	15,000	1,400 J
ISOPROPYL ALCOHOL	ND	ND	72	ND
M,P-XYLENES	960 J	1,100 J	1,300	6 J
METHYLENE CHLORIDE	ND	ND	ND	ND
O-XYLENE	770 J	970 J	750	8 J
PROPYLENE	2,400 J	2,600 J	3,000	ND
STYRENE	ND	ND	ND	ND
TERT-BUTYL METHYL ETHER	ND	ND	ND	ND
TETRACHLOROETHENE	ND	19 J	ND	ND
TETRAHYDROFURAN	ND	ND	ND	ND
TOLUENE	67 J	ND	ND	ND
TRANS-1,2-DICHLOROETHENE	ND	18 J	19	ND
TRANS-1,3-DICHLOROPROPENE	ND	ND	ND	ND
TRICHLOROETHENE	39 J	18 J	9 J	ND
TRICHLOROFLUOROMETHANE	ND	17 J	ND	ND
VINYL ACETATE	ND	ND	ND	ND
VINYL CHLORIDE	130 J	150 J	150	ND
EPA 3C Landfill Gas (%)				
CARBON DIOXIDE	7	10	11	6
CARBON MONOXIDE	ND	ND	ND	ND
METHANE	64	71	69	7
NITROGEN	25	17	19	87
OXYGEN	3	0.4	0.5	1
EPA 25C Total Nonmethane Organic Carbon (ppmv)				
METHANE	670,000 J	NA	NA	NA
NONMETHANE ORGANIC CARBON	210	330	150	36

APPENDIX C
QUARTERLY ANALYTICAL RESULTS (Continued)

Parcel E Nonstandard Data Gaps Investigation, Landfill Gas Characterization, Hunters Point Shipyard, San Francisco, California

Sample Location ID	GMP11	GMP11	GMP11	GMP11
Sample ID	GMP11SG001	GMP11SG002	GMP11SG003	GMP11SG004
Sample Date	04/22/2002	05/22/2002	07/31/2002	07/31/2002
EPA TO-14 VOA (µg/m3)				
1,1,1-TRICHLOROETHANE	ND	ND	ND	ND
1,1,2,2-TETRACHLOROETHANE	ND	ND	ND	ND
1,1,2-TRICHLORO-1,2,2-TRIFLUOROETHANE	ND	ND	ND	ND
1,1,2-TRICHLOROETHANE	ND	ND	ND	ND
1,1-DICHLOROETHANE	ND	19 J	8	10
1,1-DICHLOROETHENE	ND	ND	ND	ND
1,2,4-TRICHLOROBENZENE	ND	ND	ND	ND
1,2,4-TRIMETHYLBENZENE	28 J	ND	ND	ND
1,2-DIBROMOETHANE	ND	ND	ND	ND
1,2-DICHLORO-1,1,2,2-TETRAFLUOROETHANE	300 J	430 J	260	310
1,2-DICHLOROBENZENE	ND	ND	ND	ND
1,2-DICHLOROETHANE	ND	ND	ND	ND
1,2-DICHLOROPROPANE	ND	ND	ND	ND
1,3,5-TRIMETHYLBENZENE	ND	ND	8 J	7 J
1,3-BUTADIENE	ND	ND	ND	ND
1,3-DICHLOROBENZENE	ND	ND	ND	ND
1,4-DICHLOROBENZENE	ND	ND	6 J	ND
1,4-DIOXANE	ND	ND	ND	ND
2-BUTANONE	ND	ND	ND	ND
2-HEXANONE	ND	ND	ND	ND
4-ETHYLTOLUENE	ND	ND	ND	ND
4-METHYL-2-PENTANONE	ND	ND	ND	ND
ACETONE	ND	ND	ND	ND
BENZENE	17 J	14 J	3 J	8 J
BENZYL CHLORIDE	ND	ND	ND	ND
BROMODICHLOROMETHANE	ND	ND	ND	ND
BROMOFORM	ND	ND	ND	ND
BROMOMETHANE	ND	ND	ND	ND
CARBON DISULFIDE	ND	10 J	ND	ND
CARBON TETRACHLORIDE	ND	ND	ND	ND
CHLOROBENZENE	400 J	190 J	ND	ND
CHLOROETHANE	16 J	32 J	16	20
CHLOROFORM	ND	ND	ND	ND
CHLOROMETHANE	ND	ND	ND	ND
CIS-1,2-DICHLOROETHENE	ND	21 J	12	14
CIS-1,3-DICHLOROPROPENE	ND	ND	ND	ND

APPENDIX C
QUARTERLY ANALYTICAL RESULTS (Continued)

Parcel E Nonstandard Data Gaps Investigation, Landfill Gas Characterization, Hunters Point Shipyard, San Francisco, California

Sample Location ID	GMP11	GMP11	GMP11	GMP11
Sample ID	GMP11SG001	GMP11SG002	GMP11SG003	GMP11SG004
Sample Date	04/22/2002	05/22/2002	07/31/2002	07/31/2002
EPA TO-14 VOA (µg/m3)				
CYCLOHEXANE	980 J	1,300 J	660	910 J
DIBROMOCHLOROMETHANE	ND	ND	ND	ND
DICHLORODIFLUOROMETHANE	ND	65 J	50	50
ETHANOL	ND	ND	ND	ND
ETHYLBENZENE	ND	20 J	ND	ND
HEPTANE	200 J	200 J	120	350 J
HEXACHLOROBUTADIENE	91 J	ND	ND	ND
HEXANE	920 J	1,100 J	750	790
ISOPROPYL ALCOHOL	ND	ND	ND	ND
M,P-XYLENES	46 J	ND	ND	ND
METHYLENE CHLORIDE	ND	ND	120	ND
O-XYLENE	21 J	18 J	ND	ND
PROPYLENE	250 J	61 J	42	40
STYRENE	ND	ND	ND	ND
TERT-BUTYL METHYL ETHER	ND	ND	ND	ND
TETRACHLOROETHENE	ND	ND	ND	ND
TETRAHYDROFURAN	ND	ND	ND	ND
TOLUENE	ND	ND	ND	ND
TRANS-1,2-DICHLOROETHENE	ND	ND	ND	ND
TRANS-1,3-DICHLOROPROPENE	ND	ND	ND	ND
TRICHLOROETHENE	ND	ND	ND	ND
TRICHLOROFLUOROMETHANE	ND	ND	ND	ND
VINYL ACETATE	ND	ND	ND	ND
VINYL CHLORIDE	ND	20 J	8	9
EPA 3C Landfill Gas (%)				
CARBON DIOXIDE	12 J	19	22	22
CARBON MONOXIDE	ND	ND	ND	ND
METHANE	53 J	65	57	57
NITROGEN	29 J	15	20	20
OXYGEN	5 J	0.5	0.5	0.5
EPA 25C Total Nonmethane Organic Carbon (ppmv)				
METHANE	580,000 J	NA	NA	NA
NONMETHANE ORGANIC CARBON	76	32	21	50

APPENDIX C
QUARTERLY ANALYTICAL RESULTS (Continued)

Parcel E Nonstandard Data Gaps Investigation, Landfill Gas Characterization, Hunters Point Shipyard, San Francisco, California

Sample Location ID	GMP12	GMP12	GMP12	GMP12	GMP12	GMP12	GMP13
Sample ID	GMP12SG001	GMP12SG002	GMP12SG003	GMP12MER001	GMP12SG004	GMP12SG005	GMP13SG001
Sample Date	04/22/2002	04/22/2002	05/22/2002	06/05/2002	07/31/2002	11/13/2002	06/05/2002
EPA TO-14 VOA (µg/m3)							
1,1,1-TRICHLOROETHANE	ND	ND	ND	NA	ND	ND	ND
1,1,2,2-TETRACHLOROETHANE	ND	ND	ND	NA	ND	ND	ND
1,1,2-TRICHLORO-1,2,2-TRIFLUOROETHANE	ND	ND	ND	NA	ND	ND	ND
1,1,2-TRICHLOROETHANE	ND	ND	ND	NA	ND	ND	ND
1,1-DICHLOROETHANE	ND	14 J	20 J	NA	ND	9 J	ND
1,1-DICHLOROETHENE	ND	ND	ND	NA	ND	ND	ND
1,2,4-TRICHLOROBENZENE	ND	ND	ND	NA	ND	ND	ND
1,2,4-TRIMETHYLBENZENE	ND	ND	19 J	NA	90	ND	ND
1,2-DIBROMOETHANE	ND	ND	ND	NA	ND	ND	ND
1,2-DICHLORO-1,1,2,2-TETRAFLUOROETHANE	300 J	280 J	260 J	NA	330	85 J	ND
1,2-DICHLOROBENZENE	ND	ND	ND	NA	6 J	4 J	ND
1,2-DICHLOROETHANE	ND	ND	10 J	NA	ND	ND	ND
1,2-DICHLOROPROPANE	ND	ND	ND	NA	ND	ND	ND
1,3,5-TRIMETHYLBENZENE	ND	ND	10 J	NA	34	5 J	ND
1,3-BUTADIENE	ND	ND	ND	NA	ND	ND	ND
1,3-DICHLOROBENZENE	ND	ND	ND	NA	ND	ND	ND
1,4-DICHLOROBENZENE	690 J	ND	670 J	NA	860	920 J	ND
1,4-DIOXANE	ND	ND	ND	NA	ND	ND	ND
2-BUTANONE	ND	ND	ND	NA	ND	ND	ND
2-HEXANONE	ND	ND	ND	NA	ND	ND	ND
4-ETHYLTOLUENE	ND	ND	ND	NA	ND	ND	ND
4-METHYL-2-PENTANONE	ND	ND	ND	NA	ND	ND	ND
ACETONE	ND	ND	ND	NA	ND	ND	ND
BENZENE	200 J	170 J	240 J	NA	290	78 J	ND
BENZYL CHLORIDE	ND	ND	ND	NA	ND	ND	ND
BROMODICHLOROMETHANE	ND	ND	ND	NA	ND	ND	ND
BROMOFORM	ND	ND	ND	NA	ND	ND	ND
BROMOMETHANE	ND	ND	ND	NA	ND	ND	ND
CARBON DISULFIDE	57 J	48 J	170 J	NA	ND	ND	ND
CARBON TETRACHLORIDE	ND	ND	ND	NA	ND	ND	ND
CHLOROBENZENE	530 J	ND	520 J	NA	850	520 J	ND
CHLOROETHANE	73 J	63 J	72 J	NA	78	10 J	ND
CHLOROFORM	ND	ND	ND	NA	ND	ND	36
CHLOROMETHANE	ND	ND	ND	NA	ND	ND	ND
CIS-1,2-DICHLOROETHENE	15 J	ND	15 J	NA	21	ND	ND
CIS-1,3-DICHLOROPROPENE	ND	ND	ND	NA	ND	ND	ND

APPENDIX C
QUARTERLY ANALYTICAL RESULTS (Continued)

Parcel E Nonstandard Data Gaps Investigation, Landfill Gas Characterization, Hunters Point Shipyard, San Francisco, California

Sample Location ID	GMP12	GMP12	GMP12	GMP12	GMP12	GMP12	GMP13
Sample ID	GMP12SG001	GMP12SG002	GMP12SG003	GMP12MER001	GMP12SG004	GMP12SG005	GMP13SG001
Sample Date	04/22/2002	04/22/2002	05/22/2002	06/05/2002	07/31/2002	11/13/2002	06/05/2002
EPA TO-14 VOA (µg/m3)							
CYCLOHEXANE	1,600 J	1,500 J	2,300 J	NA	870	ND	ND
DIBROMOCHLOROMETHANE	ND	ND	ND	NA	ND	ND	ND
DICHLORODIFLUOROMETHANE	350 J	310 J	ND	NA	60	200 J	ND
ETHANOL	270 J	210 J	ND	NA	ND	ND	ND
ETHYLBENZENE	34 J	32 J	57 J	NA	33	11 J	ND
HEPTANE	920 J	810 J	1,200 J	NA	130	9 J	ND
HEXACHLOROBUTADIENE	ND	ND	ND	NA	ND	ND	ND
HEXANE	2,000 J	1,700 J	2,400 J	NA	1,600	54 J	ND
ISOPROPYL ALCOHOL	66 J	77 J	ND	NA	ND	ND	6
M,P-XYLENES	43 J	39 J	ND	NA	ND	8 J	ND
METHYLENE CHLORIDE	ND	ND	ND	NA	ND	ND	ND
O-XYLENE	47 J	37 J	26 J	NA	ND	11 J	ND
PROPYLENE	1,200 J	1,100 J	260 J	NA	ND	98 J	ND
STYRENE	ND	ND	ND	NA	ND	ND	ND
T-BUTYL MERCAPTAN	NA	NA	NA	710 J	NA	NA	NA
TERT-BUTYL METHYL ETHER	ND	ND	ND	NA	ND	ND	ND
TETRACHLOROETHENE	ND	ND	ND	NA	ND	8 J	14
TETRAHYDROFURAN	ND	ND	ND	NA	ND	ND	ND
TETRAHYDROTHIOPHENE	NA	NA	NA	ND	NA	NA	NA
TOLUENE	ND	ND	ND	NA	ND	ND	ND
TRANS-1,2-DICHLOROETHENE	ND	ND	8 J	NA	8	ND	ND
TRANS-1,3-DICHLOROPROPENE	ND	ND	ND	NA	ND	ND	ND
TRICHLOROETHENE	ND	ND	12 J	NA	9 J	7 J	ND
TRICHLOROFLUOROMETHANE	ND	ND	ND	NA	ND	ND	ND
VINYL ACETATE	ND	ND	ND	NA	ND	ND	ND
VINYL CHLORIDE	20 J	18 J	25 J	NA	13	ND	ND
EPA 3C Landfill Gas (%)							
CARBON DIOXIDE	19	16	27	NA	27	12	0.6
CARBON MONOXIDE	ND	ND	ND	NA	ND	ND	ND
METHANE	52	44	60	NA	56	2	ND
NITROGEN	24	33	13	NA	16	84	82
OXYGEN	5	7	0.6	NA	1	2	18
EPA 25C Total Nonmethane Organic Carbon (ppmv)							
METHANE	540,000 J	470,000 J	NA	NA	NA	NA	ND

APPENDIX C
QUARTERLY ANALYTICAL RESULTS (Continued)

Parcel E Nonstandard Data Gaps Investigation, Landfill Gas Characterization, Hunters Point Shipyard, San Francisco, California

Sample Location ID	GMP12	GMP12	GMP12	GMP12	GMP12	GMP12	GMP13
Sample ID	GMP12SG001	GMP12SG002	GMP12SG003	GMP12MER001	GMP12SG004	GMP12SG005	GMP13SG001
Sample Date	04/22/2002	04/22/2002	05/22/2002	06/05/2002	07/31/2002	11/13/2002	06/05/2002
EPA 25C Total Nonethane Organic Carbon (ppmv)							
NONMETHANE ORGANIC CARBON	31	41	83	NA	28	50	ND

APPENDIX C
QUARTERLY ANALYTICAL RESULTS (Continued)

Parcel E Nonstandard Data Gaps Investigation, Landfill Gas Characterization, Hunters Point Shipyard, San Francisco, California

Sample Location ID	GMP14	GMP15	GMP16	GMP16	GMP17	GMP18	GMP19
Sample ID	GMP14SG001	GMP15SG001	GMP16SG001	GMP16SG002	GMP17SG001	GMP18SG001	GMP19SG001
Sample Date	06/05/2002	06/05/2002	06/05/2002	06/05/2002	06/05/2002	06/05/2002	06/05/2002
EPA TO-14 VOA (µg/m3)							
1,1,1-TRICHLOROETHANE	ND	ND	ND	ND	ND	ND	ND
1,1,2,2-TETRACHLOROETHANE	ND	ND	ND	ND	ND	ND	ND
1,1,2-TRICHLORO-1,2,2-TRIFLUOROETHANE	ND	ND	ND	ND	ND	ND	ND
1,1,2-TRICHLOROETHANE	ND	ND	ND	ND	ND	ND	ND
1,1-DICHLOROETHANE	ND	ND	ND	ND	ND	ND	ND
1,1-DICHLOROETHENE	ND	ND	ND	ND	ND	ND	ND
1,2,4-TRICHLOROBENZENE	ND	ND	ND	ND	ND	ND	7
1,2,4-TRIMETHYLBENZENE	39	7	12	22	ND	ND	26
1,2-DIBROMOETHANE	ND	ND	ND	ND	ND	ND	ND
1,2-DICHLORO-1,1,2,2-TETRAFLUOROETHANE	ND	ND	ND	ND	ND	ND	ND
1,2-DICHLOROBENZENE	ND	ND	ND	ND	ND	ND	ND
1,2-DICHLOROETHANE	ND	ND	ND	ND	ND	ND	ND
1,2-DICHLOROPROPANE	ND	ND	ND	ND	ND	ND	ND
1,3,5-TRIMETHYLBENZENE	ND	ND	5	9	ND	ND	5
1,3-BUTADIENE	ND	ND	ND	ND	ND	ND	11
1,3-DICHLOROBENZENE	ND	ND	ND	ND	ND	ND	ND
1,4-DICHLOROBENZENE	ND	ND	ND	6	ND	ND	ND
1,4-DIOXANE	ND	ND	ND	ND	ND	ND	ND
2-BUTANONE	ND	ND	ND	ND	ND	ND	ND
2-HEXANONE	ND	ND	ND	ND	ND	ND	ND
4-ETHYLTOLUENE	ND	ND	ND	6	ND	ND	ND
4-METHYL-2-PENTANONE	ND	ND	ND	ND	ND	ND	ND
ACETONE	ND	ND	ND	11	ND	ND	ND
BENZENE	ND	ND	28	28	ND	ND	14
BENZYL CHLORIDE	ND	ND	ND	ND	ND	ND	ND
BROMODICHLOROMETHANE	ND	ND	8	8	ND	ND	12
BROMOFORM	ND	ND	ND	ND	ND	ND	ND
BROMOMETHANE	ND	ND	ND	ND	ND	ND	ND
CARBON DISULFIDE	ND	ND	ND	ND	ND	ND	ND
CARBON TETRACHLORIDE	26	6	ND	ND	ND	ND	ND
CHLOROBENZENE	ND	ND	ND	ND	ND	ND	ND
CHLOROETHANE	ND	ND	ND	ND	ND	ND	ND
CHLOROFORM	54	16	6	5	ND	ND	10
CHLOROMETHANE	ND	ND	ND	ND	ND	ND	ND
CIS-1,2-DICHLOROETHENE	ND	ND	ND	ND	ND	ND	ND
CIS-1,3-DICHLOROPROPENE	ND	ND	ND	ND	ND	ND	ND

APPENDIX C
QUARTERLY ANALYTICAL RESULTS (Continued)

Parcel E Nonstandard Data Gaps Investigation, Landfill Gas Characterization, Hunters Point Shipyard, San Francisco, California

Sample Location ID	GMP14	GMP15	GMP16	GMP16	GMP17	GMP18	GMP19
Sample ID	GMP14SG001	GMP15SG001	GMP16SG001	GMP16SG002	GMP17SG001	GMP18SG001	GMP19SG001
Sample Date	06/05/2002	06/05/2002	06/05/2002	06/05/2002	06/05/2002	06/05/2002	06/05/2002
EPA TO-14 VOA (µg/m3)							
CYCLOHEXANE	ND	ND	ND	ND	ND	ND	ND
DIBROMOCHLOROMETHANE	ND	ND	11	13	ND	ND	ND
DICHLORODIFLUOROMETHANE	ND	9	6	9	ND	ND	5
ETHANOL	ND	ND	ND	ND	ND	ND	ND
ETHYLBENZENE	ND	ND	28	57	ND	ND	ND
HEPTANE	ND	ND	ND	ND	ND	ND	ND
HEXACHLOROBUTADIENE	ND	ND	ND	ND	ND	ND	21 J
HEXANE	ND	ND	ND	ND	ND	ND	ND
ISOPROPYL ALCOHOL	10	ND	ND	ND	ND	ND	ND
M,P-XYLENES	ND	ND	48	84	ND	ND	ND
METHYLENE CHLORIDE	ND	ND	ND	ND	ND	ND	ND
O-XYLENE	ND	8 J	22 J	35 J	ND	ND	11 J
PROPYLENE	ND	ND	ND	ND	ND	ND	37
STYRENE	ND	ND	5	8	ND	ND	ND
TERT-BUTYL METHYL ETHER	ND	ND	ND	ND	ND	ND	ND
TETRACHLOROETHENE	ND	12	ND	6	ND	ND	ND
TETRAHYDROFURAN	ND	ND	ND	3	ND	ND	ND
TOLUENE	ND	ND	ND	ND	ND	ND	ND
TRANS-1,2-DICHLOROETHENE	ND	ND	ND	ND	ND	ND	ND
TRANS-1,3-DICHLOROPROPENE	ND	ND	ND	ND	ND	ND	ND
TRICHLOROETHENE	ND	ND	ND	ND	ND	16	ND
TRICHLOROFLUOROMETHANE	6	5	6	6	ND	ND	ND
VINYL ACETATE	ND	ND	ND	ND	ND	ND	ND
VINYL CHLORIDE	ND	ND	ND	ND	ND	ND	ND
EPA 3C Landfill Gas (%)							
CARBON DIOXIDE	0.3	3	0.3	0.3	0.4	0.3	0.1 J
CARBON MONOXIDE	ND	ND	ND	ND	ND	ND	ND
METHANE	ND	ND	ND	ND	ND	ND	ND
NITROGEN	81	81	80	80	81	80	81
OXYGEN	18	16	20	18	18	19	19
EPA 25C Total Nonmethane Organic Carbon (ppmv)							
METHANE	ND	ND	ND	ND	ND	ND	ND
NONMETHANE ORGANIC CARBON	ND	ND	ND	ND	ND	ND	ND

APPENDIX C
QUARTERLY ANALYTICAL RESULTS (Continued)

Parcel E Nonstandard Data Gaps Investigation, Landfill Gas Characterization, Hunters Point Shipyard, San Francisco, California

Sample Location ID	GMP22	GMP23	GMP24	GMP25
Sample ID	GMP22003	GMP23001	GMP24SG001	GMP25SG001
Sample Date	11/13/2002	11/13/2002	11/13/2002	11/13/2002
EPA TO-14 VOA (µg/m3)				
1,1,1-TRICHLOROETHANE	18 J	17 J	ND	ND
1,1,2,2-TETRACHLOROETHANE	ND	ND	ND	ND
1,1,2-TRICHLORO-1,2,2-TRIFLUOROETHANE	32 J	30 J	ND	ND
1,1,2-TRICHLOROETHANE	22 J	ND	ND	ND
1,1-DICHLOROETHANE	ND	ND	62 J	49 J
1,1-DICHLOROETHENE	15 J	15 J	ND	ND
1,2,4-TRICHLOROBENZENE	ND	ND	ND	ND
1,2,4-TRIMETHYLBENZENE	320 J	250 J	600 J	ND
1,2-DIBROMOETHANE	20 J	21 J	ND	ND
1,2-DICHLORO-1,1,2,2-TETRAFLUOROETHANE	170 J	33 J	140 J	130 J
1,2-DICHLOROBENZENE	49 J	43 J	ND	ND
1,2-DICHLOROETHANE	ND	ND	ND	ND
1,2-DICHLOROPROPANE	ND	19 J	ND	ND
1,3,5-TRIMETHYLBENZENE	300 J	370 J	750 J	6 J
1,3-BUTADIENE	ND	ND	ND	ND
1,3-DICHLOROBENZENE	28 J	24 J	ND	ND
1,4-DICHLOROBENZENE	100 J	49 J	16 J	11 J
1,4-DIOXANE	ND	ND	ND	ND
2-BUTANONE	390 J	480 J	390 J	ND
2-HEXANONE	ND	ND	ND	ND
4-ETHYLTOLUENE	75 J	71 J	88 J	ND
4-METHYL-2-PENTANONE	ND	ND	ND	ND
ACETONE	890	5,100	3,100	ND
BENZENE	100 J	310 J	160 J	49 J
BENZYL CHLORIDE	ND	ND	ND	ND
BROMODICHLOROMETHANE	ND	ND	ND	ND
BROMOFORM	ND	58 J	ND	ND
BROMOMETHANE	29 J	17 J	ND	ND
CARBON DISULFIDE	250 J	1,000 J	350 J	26 J
CARBON TETRACHLORIDE	20 J	21 J	ND	ND
CHLOROBENZENE	ND	520 J	ND	140 J
CHLOROETHANE	56 J	72 J	270 J	160 J
CHLOROFORM	26 J	16 J	ND	ND
CHLOROMETHANE	380 J	800 J	270 J	ND
CIS-1,2-DICHLOROETHENE	27 J	36 J	48 J	10 J
CIS-1,3-DICHLOROPROPENE	13 J	15 J	ND	ND

APPENDIX C
QUARTERLY ANALYTICAL RESULTS (Continued)

Parcel E Nonstandard Data Gaps Investigation, Landfill Gas Characterization, Hunters Point Shipyard, San Francisco, California

Sample Location ID	GMP22	GMP23	GMP24	GMP25
Sample ID	GMP22003	GMP23001	GMP24SG001	GMP25SG001
Sample Date	11/13/2002	11/13/2002	11/13/2002	11/13/2002
EPA TO-14 VOA (µg/m3)				
CYCLOHEXANE	1,500 J	660 J	630 J	450 J
DIBROMOCHLOROMETHANE	ND	24 J	ND	ND
DICHLORODIFLUOROMETHANE	210 J	30 J	100 J	240 J
ETHANOL	ND	ND	ND	ND
ETHYLBENZENE	130 J	170 J	92 J	6 J
HEPTANE	920 J	1,200 J	500 J	12 J
HEXACHLOROBUTADIENE	38 J	ND	ND	ND
HEXANE	1,200 J	1,200 J	790 J	140 J
ISOPROPYL ALCOHOL	ND	ND	ND	ND
M,P-XYLENES	1,100 J	620 J	1,000 J	57 J
METHYLENE CHLORIDE	140 J	120 J	ND	ND
O-XYLENE	660 J	400 J	700 J	29 J
PROPYLENE	1,200	26,000	4,900	840 J
STYRENE	29 J	25 J	36 J	ND
TERT-BUTYL METHYL ETHER	ND	ND	ND	ND
TETRACHLOROETHENE	43 J	38 J	19 J	11 J
TETRAHYDROFURAN	ND	11 J	ND	ND
TOLUENE	77 J	96 J	61 J	ND
TRANS-1,2-DICHLOROETHENE	18 J	19 J	ND	ND
TRANS-1,3-DICHLOROPROPENE	13 J	13 J	ND	ND
TRICHLOROETHENE	39 J	36 J	19 J	8 J
TRICHLOROFLUOROMETHANE	19 J	18 J	9 J	ND
VINYL ACETATE	ND	ND	ND	ND
VINYL CHLORIDE	15 J	17 J	14 J	4 J
EPA 3C Landfill Gas (%)				
CARBON DIOXIDE	13	5	13	13
CARBON MONOXIDE	ND	ND	ND	ND
METHANE	0.7	0.6	2	0.6
NITROGEN	85	94	83	85
OXYGEN	1	1	2	2
EPA 25C Total Nonmethane Organic Carbon (ppmv)				
NONMETHANE ORGANIC CARBON	54	43	130	75

APPENDIX C
QUARTERLY ANALYTICAL RESULTS (Continued)

Parcel E Nonstandard Data Gaps Investigation, Landfill Gas Characterization, Hunters Point Shipyard, San Francisco, California

Sample Location ID	IR01MW16A	IR01MW16A	IR01MW16A	IR01MW16A	IR01MW18A	IR01MW18A	IR01MW18A
Sample ID	IR01MW16ASG001	IR01MW16ASG002	IR01MW16ASG003	IR01MW16ASG004	IR01MW18ASG001	IR01MW18ASG002	IR01MW18ASG003
Sample Date	04/22/2002	05/22/2002	08/01/2002	11/13/2002	04/22/2002	08/01/2002	11/13/2002
EPA TO-14 VOA (µg/m3)							
1,1,1-TRICHLOROETHANE	ND	ND	ND	ND	ND	ND	ND
1,1,2,2-TETRACHLOROETHANE	ND	ND	ND	ND	ND	ND	ND
1,1,2-TRICHLORO-1,2,2-TRIFLUOROETHANE	ND	ND	ND	ND	ND	8 J	ND
1,1,2-TRICHLOROETHANE	ND	ND	ND	ND	ND	ND	ND
1,1-DICHLOROETHANE	ND	ND	ND	ND	ND	10	ND
1,1-DICHLOROETHENE	ND	ND	ND	ND	ND	ND	ND
1,2,4-TRICHLOROBENZENE	ND	ND	40	ND	ND	ND	ND
1,2,4-TRIMETHYLBENZENE	180	260 J	550	70	110	170	500 J
1,2-DIBROMOETHANE	ND	ND	ND	ND	ND	ND	ND
1,2-DICHLORO-1,1,2,2-TETRAFLUOROETHANE	420	210 J	260	180	250	170	160 J
1,2-DICHLOROBENZENE	ND	ND	6 J	ND	ND	9 J	16 J
1,2-DICHLOROETHANE	ND	ND	7 J	ND	ND	ND	5 J
1,2-DICHLOROPROPANE	ND	ND	ND	ND	ND	4 J	ND
1,3,5-TRIMETHYLBENZENE	93	110 J	210	44	57 J	110	260 J
1,3-BUTADIENE	ND	ND	ND	ND	ND	ND	ND
1,3-DICHLOROBENZENE	70 J	51 J	86	45	52 J	37	45 J
1,4-DICHLOROBENZENE	210	150 J	280	130	490	370	460 J
1,4-DIOXANE	ND	ND	ND	ND	ND	ND	ND
2-BUTANONE	ND	ND	60	ND	ND	60	ND
2-HEXANONE	ND	ND	ND	ND	ND	ND	ND
4-ETHYLTOLUENE	ND	110 J	220	ND	ND	110	140 J
4-METHYL-2-PENTANONE	ND	ND	ND	ND	ND	ND	ND
ACETONE	ND	ND	210	ND	ND	2,000	46 J
BENZENE	410	680 J	300	160	62	110	140 J
BENZYL CHLORIDE	ND	ND	ND	ND	ND	ND	ND
BROMODICHLOROMETHANE	ND	ND	ND	ND	ND	ND	ND
BROMOFORM	ND	ND	ND	ND	ND	ND	ND
BROMOMETHANE	ND	ND	ND	ND	ND	ND	ND
CARBON DISULFIDE	ND	10 J	ND	17	ND	7	ND
CARBON TETRACHLORIDE	ND	ND	ND	ND	ND	ND	ND
CHLOROBENZENE	ND	ND	ND	ND	160	ND	270 J
CHLOROETHANE	140	110 J	130	120	140	80	83 J
CHLOROFORM	ND	ND	ND	ND	ND	ND	ND
CHLOROMETHANE	36	ND	ND	ND	ND	ND	ND
CIS-1,2-DICHLOROETHENE	50 J	60 J	48	32	ND	23	25 J
CIS-1,3-DICHLOROPROPENE	ND	ND	ND	ND	ND	ND	ND

APPENDIX C
QUARTERLY ANALYTICAL RESULTS (Continued)

Parcel E Nonstandard Data Gaps Investigation, Landfill Gas Characterization, Hunters Point Shipyard, San Francisco, California

Sample Location ID	IR01MW16A	IR01MW16A	IR01MW16A	IR01MW16A	IR01MW18A	IR01MW18A	IR01MW18A
Sample ID	IR01MW16ASG001	IR01MW16ASG002	IR01MW16ASG003	IR01MW16ASG004	IR01MW18ASG001	IR01MW18ASG002	IR01MW18ASG003
Sample Date	04/22/2002	05/22/2002	08/01/2002	11/13/2002	04/22/2002	08/01/2002	11/13/2002
EPA TO-14 VOA (µg/m3)							
CYCLOHEXANE	2,400	1,800 J	1,300	2,000 J	1,200	770	1,500 J
DIBROMOCHLOROMETHANE	ND	ND	ND	ND	ND	ND	ND
DICHLORODIFLUOROMETHANE	230	42 J	86	150	510	120	180 J
ETHANOL	ND	ND	ND	ND	ND	ND	ND
ETHYLBENZENE	83	180 J	390	53	68	100	130 J
HEPTANE	3,700	5,400 J	3,700	830	510	2,100	2,900
HEXACHLOROBUTADIENE	ND	ND	ND	ND	33 J	ND	ND
HEXANE	2,500	2,100 J	2,200	1,600	1,300	1,700	2,100
ISOPROPYL ALCOHOL	ND	ND	ND	ND	ND	300	ND
M,P-XYLENES	190	440 J	790	110	100	280	570 J
METHYLENE CHLORIDE	ND	39 J	ND	ND	ND	ND	ND
O-XYLENE	74	130 J	220	43	49 J	97	220 J
PROPYLENE	3,000	1,300 J	880	890	1,200	3,700	2,500
STYRENE	ND	ND	12	ND	ND	ND	ND
TERT-BUTYL METHYL ETHER	ND	ND	ND	ND	ND	ND	ND
TETRACHLOROETHENE	ND	30 J	90	21	ND	7 J	9 J
TETRAHYDROFURAN	ND	ND	ND	ND	ND	ND	ND
TOLUENE	110	230 J	320	57	49 J	200	100 J
TRANS-1,2-DICHLOROETHENE	41 J	48 J	34	27	ND	10	10 J
TRANS-1,3-DICHLOROPROPENE	ND	ND	ND	ND	ND	ND	ND
TRICHLOROETHENE	64 J	38 J	53	28	17 J	12	10 J
TRICHLOROFLUOROMETHANE	ND	ND	ND	ND	ND	ND	ND
VINYL ACETATE	ND	ND	ND	ND	ND	ND	ND
VINYL CHLORIDE	79	83 J	36	39	31 J	47	83 J
EPA 3C Landfill Gas (%)							
CARBON DIOXIDE	26	30	31	27	24	31	31
CARBON MONOXIDE	ND	ND	ND	ND	ND	ND	ND
METHANE	56	55	51	45	44	56	58
NITROGEN	17	14	17	26	32	12	10
OXYGEN	0.7	1	0.5	3	0.2	0.8	2
EPA 25C Total Nonmethane Organic Carbon (ppmv)							
METHANE	600,000 J	NA	NA	NA	450,000 J	NA	NA
NONMETHANE ORGANIC CARBON	51	93	27	68	44	61	150

APPENDIX C
QUARTERLY ANALYTICAL RESULTS (Continued)

Parcel E Nonstandard Data Gaps Investigation, Landfill Gas Characterization, Hunters Point Shipyard, San Francisco, California

Sample Location ID	IR01MW366A	IR01MW366A	IR01MW366A	IR01MW366A	IR01MW366A
Sample ID	IR01MW366ASG001	IR01MW366ASG002	IR01MW366ASG003	IR01MW366ASG004	IR01MW366ASG005
Sample Date	04/22/2002	05/22/2002	08/01/2002	08/01/2002	11/13/2002
EPA TO-14 VOA (µg/m3)					
1,1,1-TRICHLOROETHANE	ND	ND	8 J	8 J	ND
1,1,2,2-TETRACHLOROETHANE	ND	ND	ND	ND	ND
1,1,2-TRICHLORO-1,2,2-TRIFLUOROETHANE	ND	ND	ND	ND	ND
1,1,2-TRICHLOROETHANE	ND	ND	ND	ND	ND
1,1-DICHLOROETHANE	ND	ND	ND	5 J	ND
1,1-DICHLOROETHENE	ND	ND	ND	ND	ND
1,2,4-TRICHLOROBENZENE	ND	ND	ND	ND	ND
1,2,4-TRIMETHYLBENZENE	8 J	ND	65	ND	ND
1,2-DIBROMOETHANE	ND	ND	ND	ND	ND
1,2-DICHLORO-1,1,2,2-TETRAFLUOROETHANE	140	100	120	180	130
1,2-DICHLOROBENZENE	ND	ND	ND	ND	ND
1,2-DICHLOROETHANE	ND	ND	ND	ND	ND
1,2-DICHLOROPROPANE	ND	ND	ND	ND	ND
1,3,5-TRIMETHYLBENZENE	ND	ND	22	ND	ND
1,3-BUTADIENE	ND	ND	ND	ND	ND
1,3-DICHLOROBENZENE	ND	ND	ND	ND	ND
1,4-DICHLOROBENZENE	10 J	ND	ND	ND	ND
1,4-DIOXANE	ND	ND	ND	ND	ND
2-BUTANONE	ND	ND	ND	ND	ND
2-HEXANONE	ND	ND	ND	ND	ND
4-ETHYLTOLUENE	ND	ND	11	ND	ND
4-METHYL-2-PENTANONE	ND	ND	ND	ND	ND
ACETONE	ND	ND	130	94	ND
BENZENE	ND	ND	4 J	3 J	ND
BENZYL CHLORIDE	ND	ND	ND	ND	ND
BROMODICHLOROMETHANE	ND	ND	ND	ND	ND
BROMOFORM	ND	ND	ND	ND	ND
BROMOMETHANE	ND	ND	ND	ND	ND
CARBON DISULFIDE	5 J	ND	66	18	ND
CARBON TETRACHLORIDE	ND	ND	ND	ND	ND
CHLOROBENZENE	ND	ND	ND	ND	ND
CHLOROETHANE	ND	7	12	12	9
CHLOROFORM	34 J	12	13	20	ND
CHLOROMETHANE	ND	16	23	34	ND
CIS-1,2-DICHLOROETHENE	ND	ND	ND	ND	ND
CIS-1,3-DICHLOROPROPENE	ND	ND	ND	ND	ND

APPENDIX C
QUARTERLY ANALYTICAL RESULTS (Continued)

Parcel E Nonstandard Data Gaps Investigation, Landfill Gas Characterization, Hunters Point Shipyard, San Francisco, California

Sample Location ID	IR01MW366A	IR01MW366A	IR01MW366A	IR01MW366A	IR01MW366A
Sample ID	IR01MW366ASG001	IR01MW366ASG002	IR01MW366ASG003	IR01MW366ASG004	IR01MW366ASG005
Sample Date	04/22/2002	05/22/2002	08/01/2002	08/01/2002	11/13/2002
EPA TO-14 VOA (µg/m3)					
CYCLOHEXANE	ND	ND	14	7	6
DIBROMOCHLOROMETHANE	ND	ND	ND	ND	ND
DICHLORODIFLUOROMETHANE	ND	ND	ND	ND	ND
ETHANOL	ND	ND	74	ND	ND
ETHYLBENZENE	ND	ND	22	ND	ND
HEPTANE	17	ND	15	10	6 J
HEXACHLOROBUTADIENE	ND	ND	ND	ND	ND
HEXANE	33	ND	250	43	6
ISOPROPYL ALCOHOL	ND	ND	130	ND	ND
M,P-XYLENES	7 J	ND	70	7	3 J
METHYLENE CHLORIDE	ND	ND	280	ND	ND
O-XYLENE	ND	ND	27	4 J	ND
PROPYLENE	290	250	700	1,000	510
STYRENE	ND	ND	ND	ND	ND
TERT-BUTYL METHYL ETHER	ND	ND	ND	ND	ND
TETRACHLOROETHENE	ND	ND	ND	6 J	6 J
TETRAHYDROFURAN	ND	ND	ND	ND	ND
TOLUENE	ND	ND	54	4 J	ND
TRANS-1,2-DICHLOROETHENE	ND	ND	ND	ND	ND
TRANS-1,3-DICHLOROPROPENE	ND	ND	ND	ND	ND
TRICHLOROETHENE	13 J	9	14	18	13
TRICHLOROFLUOROMETHANE	140	130	170	200	170
VINYL ACETATE	ND	ND	ND	ND	ND
VINYL CHLORIDE	ND	ND	ND	ND	ND
EPA 3C Landfill Gas (%)					
CARBON DIOXIDE	9	7	8	13	9
CARBON MONOXIDE	ND	ND	ND	ND	ND
METHANE	19	11	12	21	12
NITROGEN	71	74	71	64	71
OXYGEN	ND	8	9	2	8
EPA 25C Total Nonmethane Organic Carbon (ppmv)					
METHANE	670,000 J	NA	NA	NA	NA
NONMETHANE ORGANIC CARBON	54	38	45	95	57

APPENDIX C
QUARTERLY ANALYTICAL RESULTS (Continued)

Parcel E Nonstandard Data Gaps Investigation, Landfill Gas Characterization, Hunters Point Shipyard, San Francisco, California

Sample Location ID	IR01MWI-5	IR01MWI-5	IR01MWI-5
Sample ID	IR01MWI-5SG001	IR01MWI-5SG002	IR01MWI-5SG003
Sample Date	04/22/2002	08/01/2002	11/13/2002
EPA TO-14 VOA (µg/m3)			
1,1,1-TRICHLOROETHANE	ND	ND	ND
1,1,2,2-TETRACHLOROETHANE	ND	ND	ND
1,1,2-TRICHLORO-1,2,2-TRIFLUOROETHANE	ND	ND	ND
1,1,2-TRICHLOROETHANE	ND	ND	ND
1,1-DICHLOROETHANE	ND	ND	ND
1,1-DICHLOROETHENE	ND	ND	ND
1,2,4-TRICHLOROBENZENE	22 J	ND	ND
1,2,4-TRIMETHYLBENZENE	770	150	220 J
1,2-DIBROMOETHANE	ND	ND	ND
1,2-DICHLORO-1,1,2,2-TETRAFLUOROETHANE	890	390	570 J
1,2-DICHLOROBENZENE	28 J	ND	5 J
1,2-DICHLOROETHANE	17 J	8	ND
1,2-DICHLOROPROPANE	ND	ND	ND
1,3,5-TRIMETHYLBENZENE	1,300	140	110 J
1,3-BUTADIENE	ND	ND	ND
1,3-DICHLOROBENZENE	38 J	29	86 J
1,4-DICHLOROBENZENE	360	290	790 J
1,4-DIOXANE	ND	ND	ND
2-BUTANONE	ND	ND	ND
2-HEXANONE	ND	ND	ND
4-ETHYLTOLUENE	650	53	49 J
4-METHYL-2-PENTANONE	ND	ND	ND
ACETONE	1,300	ND	310 J
BENZENE	670	680	910 J
BENZYL CHLORIDE	ND	ND	ND
BROMODICHLOROMETHANE	ND	ND	ND
BROMOFORM	ND	ND	ND
BROMOMETHANE	ND	ND	ND
CARBON DISULFIDE	ND	ND	ND
CARBON TETRACHLORIDE	ND	ND	ND
CHLOROBENZENE	390	710	940 J
CHLOROETHANE	78	21	ND
CHLOROFORM	ND	ND	ND
CHLOROMETHANE	ND	ND	ND
CIS-1,2-DICHLOROETHENE	14 J	13	16 J
CIS-1,3-DICHLOROPROPENE	ND	ND	ND

APPENDIX C
QUARTERLY ANALYTICAL RESULTS (Continued)

Parcel E Nonstandard Data Gaps Investigation, Landfill Gas Characterization, Hunters Point Shipyard, San Francisco, California

Sample Location ID	IR01MWI-5	IR01MWI-5	IR01MWI-5
Sample ID	IR01MWI-5SG001	IR01MWI-5SG002	IR01MWI-5SG003
Sample Date	04/22/2002	08/01/2002	11/13/2002
EPA TO-14 VOA (µg/m3)			
CYCLOHEXANE	3,700	1,300	1,100 J
DIBROMOCHLOROMETHANE	ND	ND	ND
DICHLORODIFLUOROMETHANE	260	47	21 J
ETHANOL	ND	ND	ND
ETHYLBENZENE	1,600	1,100	530 J
HEPTANE	11,000	5,400	2,900
HEXACHLOROBUTADIENE	61 J	ND	ND
HEXANE	3,200	4,300	2,400
ISOPROPYL ALCOHOL	ND	ND	ND
M,P-XYLENES	3,200	1,200	570 J
METHYLENE CHLORIDE	ND	ND	ND
O-XYLENE	530	210	130 J
PROPYLENE	3,700	81	1,800
STYRENE	ND	ND	ND
TERT-BUTYL METHYL ETHER	ND	ND	ND
TETRACHLOROETHENE	ND	ND	ND
TETRAHYDROFURAN	ND	ND	ND
TOLUENE	160	460	920 J
TRANS-1,2-DICHLOROETHENE	ND	ND	ND
TRANS-1,3-DICHLOROPROPENE	ND	ND	ND
TRICHLOROETHENE	ND	ND	ND
TRICHLOROFLUOROMETHANE	230	15	ND
VINYL ACETATE	ND	ND	ND
VINYL CHLORIDE	33 J	ND	ND
EPA 3C Landfill Gas (%)			
CARBON DIOXIDE	25	30	29
CARBON MONOXIDE	ND	ND	ND
METHANE	65	67	64
NITROGEN	9	3	3
OXYGEN	2	0.3	0.4
EPA 25C Total Nonmethane Organic Carbon (ppmv)			
METHANE	690,000 J	NA	NA
NONMETHANE ORGANIC CARBON	100	80	390

APPENDIX C
QUARTERLY ANALYTICAL RESULTS (Continued)

Parcel E Nonstandard Data Gaps Investigation, Landfill Gas Characterization, Hunters Point Shipyard, San Francisco, California

Notes:

%	Percent
µg/m3	Micrograms per cubic meter
EPA	U.S. Environmental Protection Agency
ID	Identification
J	Estimated value
NA	Not analyzed
ND	Not detected
ppmv	Parts per million by volume
TO-14	Toxic Organics-14
VOA	Volatile organic analysis

APPENDIX D
EVALUATION OF VAPOR INTRUSION POTENTIAL (INDOOR AIR EXPOSURE PATHWAY) AT CRISP AVENUE AND PARCEL A

CONTENTS

ACRONYMS AND ABBREVIATIONS ..... D-iii

1.0 INTRODUCTION D-1

2.0 LANDFILL GAS INVESTIGATION RESULTS D-3

3.0 VAPOR INTRUSION EVALUATION D-3

3.1 TIER 1–PRIMARY SCREENING METHODOLOGY AND RESULTS D-4

3.2 TIER 2–SECONDARY SCREENING D-4

3.3 TIER 3–SITE-SPECIFIC PATHWAY ASSESSMENT D-5

4.0 CONCLUSIONS AND SIGNIFICANCE OF RESULTS FOR PARCEL A D-10

5.0 REFERENCES D-11

Attachment

D1 Johnson Ettinger Model Backup Spreadsheet

D2 VLookup Tables

D3 JEM Nondetects Backup Spreadsheet

FIGURES

D-1 Site Location Map D-2

D-2 Chemicals that Exceeded the Target Soil-Gas Concentration D-7

TABLES

D-1 Tier 2 – Comparison of Soil-Gas Data with Target Soil-Gas Concentration D-6

D-2 Results for Each Sampling Location D-9

ACRONYMS AND ABBREVIATIONS

bgs	Below ground surface
COPC	Chemical of potential concern
DTSC	California Department of Toxic Substances Control
EPA	U.S. Environmental Protection Agency
GMP	Gas monitoring probe
JEM	Johnson Ettinger Model
Navy	U.S. Department of the Navy
SSPA	Site-specific pathway assessment
TCE	Trichloroethene
TSGC	Target soil-gas concentration
UCSF	University of California, San Francisco
VOC	Volatile organic compound

1.0 INTRODUCTION

This appendix summarizes the vapor intrusion evaluation for volatile organic compounds (VOC) detected in soil-gas under Crisp Avenue near the Industrial Landfill in Installation Restoration Site 01/21 of Parcel E in Hunters Point Shipyard, San Francisco, California. The U.S. Department of the Navy (Navy) conducted the evaluation in general accordance with the "Draft Guidance for Evaluating the Vapor Intrusion to Indoor Air Pathway from Groundwater and Soils" (U.S. Environmental Protection Agency [EPA] 2002).

Figure D-1 shows the location of the landfill in relation to the University of California, San Francisco (UCSF) compound; Crisp Avenue; and Parcel A to the north. The limit of landfill waste is south, within 10 feet of the fence located between the UCSF compound and the landfill. The structures on the UCSF compound include Building 830, a storage building, storage sheds and bins, and animal kennels. Building 830 is currently being used as a research laboratory and is the only occupied building on the compound. Building 830 is also the only structure on the compound that has a crawlspace.

In 2002, the Navy performed a landfill gas investigation to delineate and characterize landfill gas in soils near the landfill. Investigation results showed that landfill gas consisting of mostly methane had migrated north from the landfill and accumulated under the UCSF compound. Through the investigation, the Navy determined that methane concentrations in soil-gas dissipated rapidly at the railroad tracks immediately north of the UCSF compound and that methane was not detected along Crisp Avenue. The Navy initiated a time-critical removal action to remove the accumulated methane from the subsurface of the UCSF compound and to install a control system to prevent future gas migration from the landfill (Tetra Tech EM Inc. 2002).

Information from the landfill gas characterization and removal action demonstrates the following:

- Subsurface gas from the landfill has not migrated to Parcel A.
- The gas removal action and control system have reduced methane levels north of the landfill.
- The recently installed gas control system will effectively prevent gas migration from the landfill, ensuring that landfill gas will not migrate off site onto the UCSF compound in the future.

Regulatory agency representatives and the community expressed concerns about the potential for soil-gas associated with the Parcel E Industrial Landfill to migrate from the landfill to indoor air at future structures on Parcel A and affect human health.

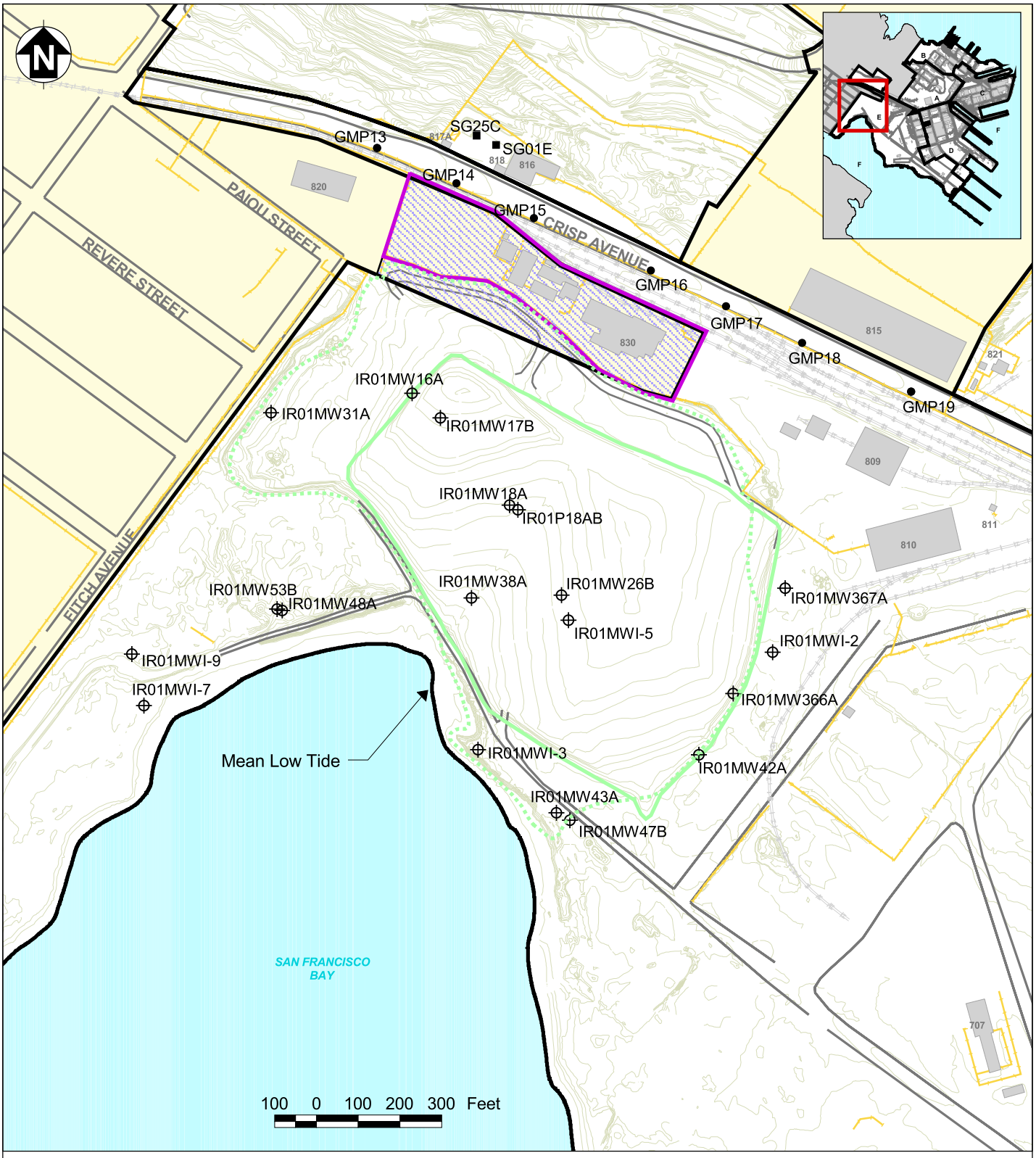

Tetra Tech EM Inc.

Installation Restoration (IR)-01/21 Monitoring Wells/Piezometers
Approximate Extent of Solid Waste
Limit of Landfill Cap
University of California, San Francisco Compound
Ground Surface Elevation (1-Foot Contours)
Temporary Soil-Gas Probe
Gas Monitoring Probe
University of California, San Francisco Property
Hunters Point Shipyard Boundary
Building
Fence
Rail Line
Road
Non-Navy Property

Hunters Point Shipyard, San Francisco, California
U.S. Navy Southwest Division, NAVFAC, San Diego

FIGURE D-1
SITE LOCATION MAP

Appendix D
Parcel E Nonstandard Data Gaps Investigation
Landfill Gas Characterization

2003-11-26 g:\hunters point\landfill gas characterization.apr TtEMI-SD KCH

The Navy conducted the vapor intrusion evaluation to assess whether VOCs detected in soil-gas samples collected from gas monitoring probes (GMP) located along Crisp Avenue and in temporary soil-gas probes located in Parcel A pose an unacceptable risk to human health. VOCs were detected in soil-gas beneath Crisp Avenue (GMP13 through GMP19) and near Buildings 816 and 817 (SG01E and SG25C); vapor intrusion was assessed for each of these areas during the evaluation.

This appendix summarizes the results of landfill characterization, the evaluation of vapor intrusion, and the results and conclusions of the vapor intrusion evaluation.

2.0 LANDFILL GAS INVESTIGATION RESULTS

The results of the landfill gas investigation indicated that landfill gas, consisting of mainly methane, migrated north from the landfill and was present in the subsurface at the UCSF compound at levels exceeding the lower explosive limit for methane. Results of the soil-gas investigation indicated that methane was not present in the subsurface north of the UCSF compound, defining the extent of landfill gas migration from the landfill.

Although methane was not detected north of the UCSF compound, investigation results indicated that nonmethane VOCs were present in soil-gas along Crisp Avenue (GMP13 through GMP19) and near Buildings 816 and 817 (SG01E and SG25C) (Figure D-1). Table 9 of the landfill gas characterization report presents the GMP analytical results of the investigation.

3.0 VAPOR INTRUSION EVALUATION

During meetings held between the Navy and the regulatory agencies to discuss the results of the landfill gas investigation, regulatory agency personnel expressed concern that indoor air in residential housing planned for Parcel A could be affected by nonmethane VOCs that were detected in soil-gas along Crisp Avenue, adjacent to the landfill. As a result, and based on a recommendation from the California Department of Toxic Substances Control (DTSC), the Navy performed an evaluation to assess whether nonmethane VOCs in soil-gas from the landfill pose an unacceptable risk to human health. This evaluation was conducted using EPA's "Draft Guidance for Evaluating the Vapor Intrusion to Indoor Air Pathway from Groundwater and Soils" and "Supplemental Guidance for Evaluating the Vapor Intrusion to Indoor Air Exposure Pathway for RCRA CA EI Determinations" (EPA 2002, 2001, respectively).

EPA has developed a tiered process for evaluating the potential for health risks caused by vapor intrusion (EPA 2001). This process consists of a systematic, three-tiered approach for assessing whether the vapor intrusion potential at a site is significant enough to warrant control measures and whether those controls should be implemented immediately. It is important to note that EPA guidance (EPA 2001) does not necessarily assess actual vapor intrusion health risks in terms of cancer risk and noncancer hazard. The guidance relies primarily on the use of risk-based screening values (for example, target soil-gas concentrations [TSGC]) to assess whether the

potential for health risks is significant enough to warrant implementation of control measures (EPA 2001).

Sections 3.1, 3.2, and 3.3 of this appendix summarize each tier of EPA's three-tiered approach.

3.1 TIER 1–PRIMARY SCREENING METHODOLOGY AND RESULTS

The first tier of the evaluation consists of the primary screening step, which involves answering the following three questions about the site.

Question 1: Are chemicals of "sufficient volatility and toxicity" present at the site? In this step, chemicals are considered sufficiently toxic if the vapor concentration of the pure component poses an incremental lifetime cancer risk greater than 1×10^{-6} or a noncancer hazard index greater than 1 (EPA 2002). Chemicals are considered sufficiently volatile if the Henry's Law Constant is 1×10^{-5} atmosphere-cubic meters per mol or greater. The Navy identified volatile and toxic chemicals by comparing chemicals detected in soil-gas with chemicals listed in Table 1 of the EPA vapor intrusion guidance (EPA 2002). The Navy identified the following chemicals of potential concern (COPC) present in soil-gas beneath Crisp Avenue and Parcel A, near the landfill, as being sufficiently toxic and volatile: 1,3-butadiene; 1,4-dichlorobenzene; acetone; benzene; bromodichloromethane; carbon tetrachloride; chlorodibromomethane; chloroform; dichlorodifluoromethane; ethylbenzene; hexachlorobutadiene; styrene; tetrachloro-ethene; trichloroethene (TCE); trichlorofluoromethane; and xylenes.

Question 2: Are "inhabited buildings" near or overlying the contamination source? Two buildings (816 and 817) are currently located north of Crisp Avenue near the temporary soil-gas probes SG01E and SG25C. Buildings 816 and 817 are currently uninhabited and are sealed to prevent public access. No buildings are located along Crisp Avenue.

Although no inhabited buildings are located above the Crisp Avenue GMPs (GMP13 through GMP19) and SG01E and SG25C, Parcel A is the site of future residential development (San Francisco Redevelopment Agency 1997). The regulatory agencies expressed concern about the potential risk to future inhabitants of Parcel A from the potential migration of gas at the nearby landfill.

Question 3: Is immediate action warranted to mitigate current risks to residents of the inhabited buildings? No inhabited buildings are currently located along Crisp Avenue or near SG01E and SG25C; therefore, immediate action is not warranted.

3.2 TIER 2–SECONDARY SCREENING

The second tier of the evaluation is the secondary screening to assess whether concentrations of chemicals in soil-gas exceed target concentrations. First, measured soil-gas concentrations were compared with generic, numerical soil-gas criteria, or TSGC, provided in Table 2 of the guidance (EPA 2002); this step is also known as "question 4." These criteria are referred to as "generic"

because they were developed based on a set of general assumptions that may or may not be relevant to the actual site being evaluated and "reflect generally reasonable worst-case conditions" (EPA 2002). Table 2 of the draft guidance is broken up into three separate tables (Table 2a through Table 2c). These three tables correspond to three cancer risk levels: 10^{-4} (Table 2a), 10^{-5} (Table 2b), and 10^{-6} (Table 2c). Table 2c was used during this evaluation because it is considered to be most protective of human health. Table 2c provides TSGC for both shallow (0 to 5 feet below ground surface [bgs]) and deep soil-gas (greater than 5 feet bgs). The shallow and deep soil-gas criteria are based on a soil-gas-to-air attenuation factor equal to 0.1 and 0.01, respectively. Because the soil-gas samples used during this screening evaluation were collected from depths varying from 3.3 to 13.5 feet bgs, the TSGCs for shallow soil-gas provided in Table 2c were chosen for this evaluation and are considered to be most protective of human health. Table D-1 of this appendix shows the results of the comparison. As indicated in Table D-1, 1,3-butadiene and TCE exceeded generic TSGCs in GMP19 and GMP18, respectively. Also, 1,3-butadiene was detected at one soil-gas sampling location, SG01E (Figure D-2). Because these COPCs exceeded the TSGC by a factor greater than 50, question 5 of the evaluation was skipped, and the evaluation proceeded to Tier 3.

3.3 TIER 3–SITE-SPECIFIC PATHWAY ASSESSMENT

The site-specific pathway assessment (SSPA) is conducted if both the preliminary screening and secondary screening steps are unable to verify that the indoor air pathway at the subject site is incomplete. For this evaluation, the SSPA was conducted because results of question 4 indicated that generic concentrations exceeded the TSGC by a factor greater than 50 for two COPCs (1,3-butadiene and TCE).

A Tier 3 SSPA was performed for 1,3-butadiene and TCE using soil-gas and crawlspace air data from Building 830 on the UCSF compound. Soil-gas data were collected from sample points immediately adjacent to Building 830, and crawlspace air data were collected from Building 830. The COPCs 1,3-butadiene and TCE, while detected in soil-gas, were not detected in crawlspace air for Building 830. These data indicate that the Tier 3 assessment shows that the subsurface vapor–to-indoor air pathway is incomplete for these two COPCs. Further, these two COPCs were each detected in only one of the seven GMPs along Crisp Avenue, indicating they are present only in a limited area. Based on the results of the screening steps and the conservative criteria used, COPCs present in soils near the landfill do not pose a significant risk to Parcel A.

As part of the Tier 3 evaluation, the potential human health risk associated with exposure to the 16 nonmethane VOCs detected in soil-gas was evaluated using the 2003 version of the Johnson Ettinger Model (JEM), which was modified to include DTSC-developed inhalation toxicity values. The JEM is a one-dimensional analytical solution to convective and diffusive vapor transport into indoor spaces; it provides an estimated attenuation coefficient that compares the vapor concentration in the indoor space with the vapor concentration at the source of contamination. The model is constructed as both a steady-state solution to vapor transport (infinite or nondiminishing source) and as a quasi-steady-state solution (finite or diminishing source). Inputs to the model include chemical properties of the COPC, soil properties of the saturated and unsaturated zones, and structural properties of the building (EPA 2003).

TABLE D-1: TIER 2 – COMPARISON OF SOIL-GAS DATA WITH TARGET SOIL-GAS CONCENTRATION

Parcel E Nonstandard Data Gaps Investigation, Landfill Gas Characterization
Hunters Point Shipyard, San Francisco, California

Soil-Gas Sample Location	Parameter	Result ($\mu g/m^3$)	TSGC[1] ($\mu g/m^3$)	Factor of Exceedance
GMP13	Chloroform	36.14	1.10	32.90
GMP13	Tetrachloroethene	14.49	8.10	1.80
GMP14	Carbon Tetrachloride	25.60	1.60	16.00
GMP14	Chloroform	54.45	1.10	49.50
GMP15	Carbon Tetrachloride	5.95	1.60	3.70
GMP15	Chloroform	16.34	1.10	14.90
GMP15	Tetrachloroethene	12.42	8.10	1.50
GMP16	Benzene	27.95	3.10	9.00
GMP16	Benzene	27.63	3.10	8.90
GMP16	Bromodichloromethane	8.14	1.40	5.80
GMP16	Bromodichloromethane	8.14	1.40	5.80
GMP16	Chloroform	5.94	1.10	5.40
GMP16	Chloroform	5.45	1.10	5.00
GMP16	Dibromochloromethane	11.25	1.00	11.20
GMP16	Dibromochloromethane	12.98	1.00	13.00
GMP16	Ethylbenzene	28.16	22.00	1.30
GMP16	Ethylbenzene	57.20	22.00	2.60
GMP18	Trichloroethene	16.04	0.22	**72.90**
GMP19	1,3-Butadiene	10.75	0.09	**123.60**
GMP19	Benzene	13.98	3.10	4.50
GMP19	Bromodichloromethane	11.53	1.40	8.20
GMP19	Chloroform	10.40	1.10	9.50
GMP19	Hexachlorobutadiene	20.62	1.10	18.70
SG01E	1,3-Butadiene	7.47	0.09	**83.00**
SG01E	Acetone	63.65	3,500	0.02
SG01E	Benzene	2.84	3.10	0.92
SG01E	Chloroform	1.06	1.10	0.96
SG25C	Chloroform	2.55	1.10	2.32

Notes: **Bold** text indicates the result exceeded the TSGC by a factor of greater than 50.

1 TSGCs presented in this table are the shallow TSGCs that correspond with target indoor air concentrations where the soil-to-indoor air attenuation factor equals 0.1

$\mu g/m^3$ Micrograms per cubic meter
GMP Gas monitoring probe
SG Soil-gas
TSGC Target soil-gas concentration

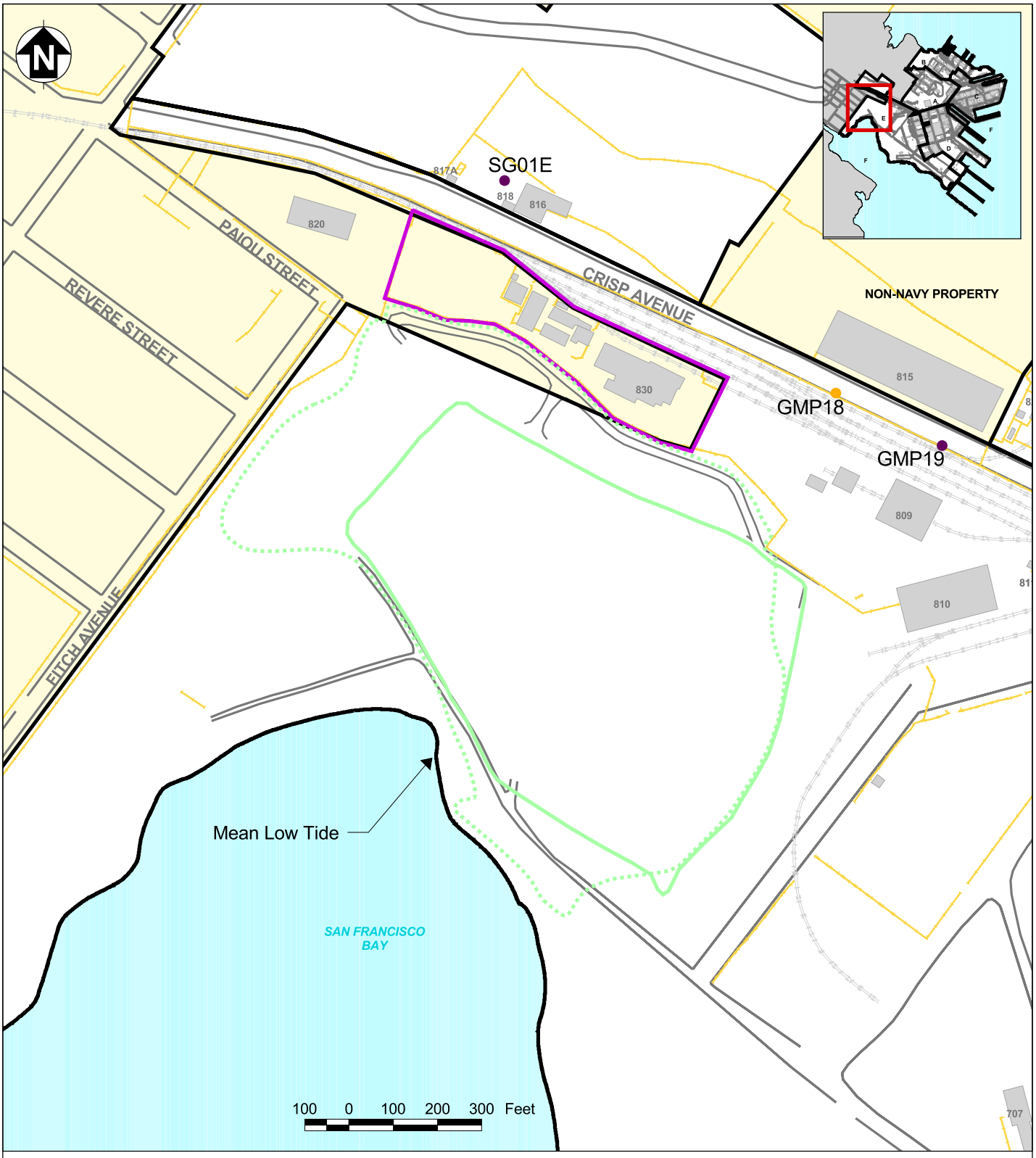

- TCE
- 1,3-butadiene
- Approximate Extent of Solid Waste
- Limit of Landfill Cap
- University of California, San Francisco Compound
- Hunters Point Shipyard Boundary
- Building
- Rail Line
- Road
- Non-Navy Property

Notes:
Samples shown contain chemical concentrations that exceed the TSGC by a factor of greater than 50.
TCE Trichloroethene
TSCG Target soil-gas concentration

Tetra Tech EM Inc.

Hunters Point Shipyard, San Francisco, California
U.S. Navy Southwest Division, NAVFAC, San Diego

FIGURE D-2
CHEMICALS THAT EXCEED THE TARGET SOIL-GAS CONCENTRATION

Appendix D
Parcel E Nonstandard Data Gaps Investigation
Landfill Gas Characterization

2003-11-26 g:\hunters point\landfill gas characterization.apr TtEMI-SD KCH

The DTSC-modified version of the JEM replaces EPA inhalation toxicity values with DTSC-developed inhalation toxicity values. In general, DTSC-developed toxicity values are more conservative than EPA-developed toxicity values, except for the inhalation unit risk for TCE. In that case, an EPA-proposed inhalation unit risk for TCE (EPA 2002) was used in the JEM. Although the EPA inhalation unit risk for TCE is considered a draft value and is undergoing review (EPA 2002), it was used in the JEM because it provides a more conservative estimate of potential risk from exposure to TCE vapors. The detected concentration for each nonmethane VOC was used to calculate the total incremental cancer risk and the noncancer hazard index at each sampling location. Risks were calculated assuming an unrestricted (residential) land use scenario. Table D-2 presents the results for each sampling location.

The results indicate that no unacceptable risk is posed by any of the COPCs detected. An EPA directive issued in 1991, that provides guidance on the role of human health risk assessments in supporting risk management decisions and in determining whether remedial action is necessary at a site states that "Where cumulative carcinogenic site risk to an individual based on reasonable maximum exposure for both current and future land use is less than 10^{-4}, and the noncancer HQ is less than 1, action generally is not warranted unless there are adverse environmental impacts."

The detection limits for several nondetected results for each sample location exceeded the generic, risk-based soil-gas criteria that were used in Tier 2 of the evaluation to assess whether measured concentrations exceed target concentrations. Because the detection limits for these samples were higher than the risk-based screening criteria, an additional evaluation was conducted to assess whether the sample detection limits for the nondetected results are protective of human health. For all compounds that had a risk-based screening criteria below the detection limit, one-half of the sample quantitation limit for the nondetected results was used as a proxy concentration for the nondetected results, following EPA risk assessment guidance (EPA 1989). The potential cancer risk and noncancer hazard for each of the nondetected results with elevated detection limits were then estimated using the proxy concentration and the JEM, following the procedures described above. The results of this evaluation showed that the potential cancer risks at each soil gas sample location associated with the elevated detection limits results ranged from 4×10^{-7} to 6×10^{-8}. The noncancer hazard associated with the elevated detection limits ranged from 0.006 to 0.001. This evaluation indicates that although detection limits exceeded health-based screening criteria for some samples, the potential cancer risk and noncancer hazard associated with the elevated detection limits are less than EPA levels of concern (1×10^{-6} for cancer effects and 1.0 for noncancer effects).

For each soil gas sampling location evaluated with the JEM, the total incremental cancer risk for carcinogenic nonmethane VOCs is less than 1×10^{-6}, and the total hazard index for noncarcinogenic nonmethane VOCs is less than 1. Attachment D1 includes the backup spreadsheet used with the JEM, Attachment D2 includes VLookup values used in the JEM model, and Attachment D3 includes the backup spreadsheet for the nondetected compounds used with the JEM.

TABLE D-2: RESULTS FOR EACH SAMPLING LOCATION

Parcel E Nonstandard Data Gaps Investigation, Landfill Gas Characterization
Hunters Point Shipyard, San Francisco, California

Soil-Gas Sampling Location	Incremental Cancer Risk	Noncancer Hazard Index
GMP13	2.0×10^{-8}	2.2×10^{-3}
GMP14	8.7×10^{-8}	5.5×10^{-3}
GMP15	2.6×10^{-8}	1.5×10^{-3}
GMP16	9.4×10^{-8}	2.1×10^{-3}
GMP18	1.1×10^{-7}	6.5×10^{-5}
GMP19	6.4×10^{-7}	7.1×10^{-3}
SG01E	3.8×10^{-7}	1.9×10^{-3}
SG25C	9.1×10^{-9}	1.3×10^{-3}

Notes:
GMP Gas monitoring probe
SG Soil-gas

4.0 CONCLUSIONS AND SIGNIFICANCE OF RESULTS FOR PARCEL A

The investigation indicates that landfill gas has not migrated north beyond the extreme southern edge of Crisp Avenue or into Parcel A. The finding is supported by the geology and the water table elevation at and around Crisp Avenue, which serve as gas flow barriers. The Navy believes that the combination of geology and water table elevation, together with the results of the landfill gas investigation and landfill gas monitoring, provide adequate assurance that landfill gas emanating from the Parcel E landfill will not affect Parcel A in the future. In addition, the removal of accumulated gas underlying the UCSF compound and the installation of the gas control system between landfill waste and areas to the north provides added assurance against any potential future effects to Parcel A.

Low concentrations of nonmethane VOCs were detected in soil-gas samples collected underneath Crisp Avenue. Vapor intrusion modeling was conducted with the JEM to assess the potential human health risks associated with detected concentrations of nonmethane VOCs. Risks were assessed for an unrestricted (residential) land-use scenario. In addition, the JEM was modified to use DTSC toxicity values, which are more conservative than EPA toxicity values. These modeling approaches provide the most conservative scenario to determine if the nonmethane VOCs at the landfill posed a threat to human health. Although the source for these nonmethane VOCs is unknown, vapor intrusion modeling and risk evaluation show that the potential cancer risk and noncancer hazard associated with exposure to nonmethane VOCs in indoor air from subsurface vapor intrusion are below 1×10^{-6} and 1.0, respectively. These results indicate that measured concentrations of nonmethane VOCs in soil gas beneath Crisp Avenue do not pose an unacceptable risk to human health.

5.0 REFERENCES

San Francisco Redevelopment Agency. 1997. "Hunters Point Shipyard (HPS) Redevelopment Plan." June 14.

Tetra Tech EM Inc. 2002. "Parcel E Landfill Gas Time-Critical Removal Action, Action Memorandum, Hunters Point Shipyard, San Francisco, California." September 23.

U.S. Environmental Protection Agency (EPA). 1989. "Risk Assessment Guidance for Superfund, Volume I, Human Health Evaluation Manual (Part A), Interim Final." Office of Emergency and Remedial Response (OERR). EPA/540/1-89/002. December.

EPA. 2001. "Supplemental Guidance for Evaluating the Vapor Intrusion to Indoor Air Exposure Pathway for RCRA CA EI Determinations."

EPA. 2002. "Draft Guidance for Evaluating the Vapor Intrusion to Indoor Air Pathway from Groundwater and Soils." Region 9. San Francisco.

EPA. 2003. Johnson and Ettinger (1991) Model for Subsurface Vapor Intrusion into Buildings. June. Available Online at: http://www.epa.gov/superfund/programs/risk/airmodel/johnson_ettinger.htm

ATTACHMENT D1
JOHNSON ETTINGER MODEL BACKUP SPREADSHEET

ATTACHMENT D1: JOHNSON ETTINGER MODEL BACKUP SPREADSHEET

Parcel E Nonstandard Data Gaps Investigation, Landfill Gas Characterization, Hunters Point Shipyard, San Francisco, California

Point ID	Sampling ID	Sample Date	Depth to Top of Screen (feet)	Analyte	CAS Number	Result ($\mu g/m^3$)	Qualifier	Average Concentration ($\mu g/m^3$)	Risk Calculated by the JEM	Hazard Quotient
GMP13	GMP13SG001	6/5/2002	6	Chloroform	67663	36.135			1.5E-08	2.2E-03
GMP13	GMP13SG001	6/5/2002	6	Isopropyl Alcohol	67630	6.474			NA	NA
GMP13	GMP13SG001	6/5/2002	6	Tetrachloroethene	127184	14.49			4.8E-09	5.4E-05
								TOTAL	**2.0E-08**	**2.2E-03**
GMP14	GMP14SG001	6/5/2002	6	1,2,4-Trimethylbenzene	95636	38.922			NA	7.4E-04
GMP14	GMP14SG001	6/5/2002	6	Carbon Tetrachloride	56235	25.6			6.5E-08	1.4E-03
GMP14	GMP14SG001	6/5/2002	6	Chloroform	67663	54.45			2.2E-08	3.3E-03
GMP14	GMP14SG001	6/5/2002	6	Isopropyl Alcohol	67630	10.458			NA	NA
GMP14	GMP14SG001	6/5/2002	6	Trichlorofluoromethane	75694	6.27			NA	1.4E-06
								TOTAL	**8.7E-08**	**5.5E-03**
GMP15	GMP15SG001	6/5/2002	6	1,2,4-Trimethylbenzene	95636	6.986			NA	1.3E-04
GMP15	GMP15SG001	6/5/2002	6	Carbon Tetrachloride	56235	5.952			1.5E-08	3.3E-04
GMP15	GMP15SG001	6/5/2002	6	Chloroform	67663	16.335			6.7E-09	9.9E-04
GMP15	GMP15SG001	6/5/2002	6	Dichlorodifluoromethane	75718	9.054			NA	5.5E-06
GMP15	GMP15SG001	6/5/2002	6	o-Xylene	95476	7.92	J3		NA	1.2E-05
GMP15	GMP15SG001	6/5/2002	6	Tetrachloroethene	127184	12.42			4.1E-09	4.6E-05
GMP15	GMP15SG001	6/5/2002	6	Trichlorofluoromethane	75694	5.016			NA	1.1E-06
								TOTAL	**2.6E-08**	**1.5E-03**
GMP16	GMP16SG001	6/5/2002	5	1,2,4-Trimethylbenzene	95636	12.475				
GMP16	GMP16SG002	6/5/2002	5	1,2,4-Trimethylbenzene	95636	21.956		17.22	NA	3.9E-04
GMP16	GMP16SG001	6/5/2002	5	1,3,5-Trimethylbenzene	108678	4.99				
GMP16	GMP16SG002	6/5/2002	5	1,3,5-Trimethylbenzene	108678	9.481		7.24	NA	1.6E-04
GMP16	GMP16SG001	6/5/2002	5	1,4-Dichlorobenzene	106476	2.5	U			
GMP16	GMP16SG002	6/5/2002	5	1,4-Dichlorobenzene	106467	6.11		4.31	3.1E-09	6.0E-06
GMP16	GMP16SG001	6/5/2002	5	4-Ethyltoluene	622968	1.8	U			
GMP16	GMP16SG002	6/5/2002	5	4-Ethyltoluene	622968	6.174		3.99	NA	NA
GMP16	GMP16SG001	6/5/2002	5	Acetone	67641	1	U			
GMP16	GMP16SG002	6/5/2002	5	Acetone	67641	11.086		6.04	NA	7.8E-06
GMP16	GMP16SG001	6/5/2002	5	Benzene	71432	27.95				
GMP16	GMP16SG002	6/5/2002	5	Benzene	71432	27.625		27.79	6.4E-08	8.6E-04
GMP16	GMP16SG001	6/5/2002	5	Bromodichloromethane	75274	8.136				
GMP16	GMP16SG002	6/5/2002	5	Bromodichloromethane	75274	8.136		8.14	1.0E-08	9.2E-06
GMP16	GMP16SG001	6/5/2002	5	Chloroform	67663	5.94				
GMP16	GMP16SG002	6/5/2002	5	Chloroform	67663	5.445		5.69	2.8E-09	4.1E-04
GMP16	GMP16SG001	6/5/2002	5	Dibromochloromethane	124481	11.245				
GMP16	GMP16SG002	6/5/2002	5	Dibromochloromethane	124481	12.975		12.11	9.0E-09	1.1E-05
GMP16	GMP16SG001	6/5/2002	5	Dichlorodifluoromethane	75718	5.533				
GMP16	GMP16SG002	6/5/2002	5	Dichlorodifluoromethane	75718	9.054		7.29	NA	5.3E-06
GMP16	GMP16SG001	6/5/2002	5	Ethylbenzene	100414	28.16				

ATTACHMENT D1: JOHNSON ETTINGER MODEL BACKUP SPREADSHEET (Continued)

Parcel E Nonstandard Data Gaps Investigation, Landfill Gas Characterization, Hunters Point Shipyard, San Francisco, California

Point ID	Sampling ID	Sample Date	Depth to Top of Screen (feet)	Analyte	CAS Number	Result ($\mu g/m^3$)	Qualifier	Average Concentration ($\mu g/m^3$)	Risk Calculated by the JEM	Hazard Quotient
GMP16	GMP16SG002	6/5/2002	5	Ethylbenzene	100414	57.2		42.68	3.3E-09	6.9E-06
GMP16	GMP16SG001	6/5/2002	5	m,p-Xylenes	106423	48.4				
GMP16	GMP16SG002	6/5/2002	5	m,p-Xylenes	106423	83.6		66.00	NA	1.1E-04
GMP16	GMP16SG001	6/5/2002	5	o-Xylene	95476	22.44	J3			
GMP16	GMP16SG002	6/5/2002	5	o-Xylene	95476	34.76	J3	28.60	NA	5.3E-05
GMP16	GMP16SG001	6/5/2002	5	Styrene	100425	5.184				
GMP16	GMP16SG002	6/5/2002	5	Styrene	100425	7.776		6.48	NA	1.0E-06
GMP16	GMP16SG001	6/5/2002	5	Tetrachloroethene	127184	1.4	U			
GMP16	GMP16SG002	6/5/2002	5	Tetrachloroethene	127184	5.658		3.53	1.4E-09	1.6E-05
GMP16	GMP16SG001	6/5/2002	5	Tetrahydrofuran	109999	1.25	U			
GMP16	GMP16SG002	6/5/2002	5	Tetrahydrofuran	109999	3.289		2.27	NA	NA
GMP16	GMP16SG001	6/5/2002	5	Trichlorofluoromethane	75694	6.27				
GMP16	GMP16SG002	6/5/2002	5	Trichlorofluoromethane	75694	5.7		5.99	NA	1.6E-06
								TOTAL	**9.4E-08**	**2.1E-03**
GMP18	GMP18SG001	6/5/2002	6	Trichloroethene	79016	16.037			1.1E-07	6.5E-05
								TOTAL	**1.1E-07**	**6.5E-05**
GMP19	GMP19SG001	6/5/2002	4.5	1,2,4-Trichlorobenzene	120821	7.144			NA	3.2E-06
GMP19	GMP19SG001	6/5/2002	4.5	1,2,4-Trimethylbenzene	95636	25.948			NA	6.6E-04
GMP19	GMP19SG001	6/5/2002	4.5	1,3,5-Trimethylbenzene	108678	5.489			NA	1.4E-04
GMP19	GMP19SG001	6/5/2002	4.5	1,3-Butadiene	106990	10.752			5.6E-07	2.3E-03
GMP19	GMP19SG001	6/5/2002	4.5	Benzene	71432	13.975			3.6E-08	4.8E-04
GMP19	GMP19SG001	6/5/2002	4.5	Bromodichloromethane	75274	11.526			1.6E-08	1.5E-05
GMP19	GMP19SG001	6/5/2002	4.5	Chloroform	67663	10.395			5.6E-09	8.2E-04
GMP19	GMP19SG001	6/5/2002	4.5	Dichlorodifluoromethane	75718	4.7785			NA	3.8E-06
GMP19	GMP19SG001	6/5/2002	4.5	Hexachlorobutadiene	87683	20.615	J7		2.7E-08	2.6E-03
GMP19	GMP19SG001	6/5/2002	4.5	o-Xylene	95476	11.44	J3		NA	2.3E-05
GMP19	GMP19SG001	6/5/2002	4.5	Propylene	115071	36.75			NA	NA
								TOTAL	**6.4E-07**	**7.1E-03**
SG01E	SG01SG008	4/4/2002	13.5	1,3-Butadiene	106990	17			3.7E-07	1.5E-03
SG01E	SG01SG008	4/4/2002	13.5	2-Butanone	78933	50			NA	7.2E-06
SG01E	SG01SG008	4/4/2002	13.5	2-Hexanone	591786	13			NA	NA
SG01E	SG01SG008	4/4/2002	13.5	4-Methyl-2-Pentanone	108101	5	J		NA	7.2E-07
SG01E	SG01SG008	4/4/2002	13.5	Acetone	67641	150			NA	9.0E-05
SG01E	SG01SG008	4/4/2002	13.5	Benzene	71432	9			8.1E-09	1.1E-04
SG01E	SG01SG008	4/4/2002	13.5	Carbon Disulfide	75150	4	J		NA	4.8E-07
SG01E	SG01SG008	4/4/2002	13.5	Chloroform	67663	5	J		9.6E-10	1.4E-04
SG01E	SG01SG008	4/4/2002	13.5	Chloromethane	74873	2	J		1.5E-10	2.2E-06
SG01E	SG01SG008	4/4/2002	13.5	Cyclohexane	110827	6			NA	2.0E-08
SG01E	SG01SG008	4/4/2002	13.5	Dichlorodifluoromethane	75718	4	J		NA	1.1E-06

ATTACHMENT D1: JOHNSON ETTINGER MODEL BACKUP SPREADSHEET (Continued)

Parcel E Nonstandard Data Gaps Investigation, Landfill Gas Characterization, Hunters Point Shipyard, San Francisco, California

Point ID	Sampling ID	Sample Date	Depth to Top of Screen (feet)	Analyte	CAS Number	Result ($\mu g/m^3$)	Qualifier	Average Concentration ($\mu g/m^3$)	Risk Calculated by the JEM	Hazard Quotient
SG01E	SG01SG008	4/4/2002	13.5	Ethanol	64175	3			NA	NA
SG01E	SG01SG008	4/4/2002	13.5	Ethylbenzene	100414	3	J		8.8E-11	1.9E-07
SG01E	SG01SG008	4/4/2002	13.5	Heptane	142825	11			NA	NA
SG01E	SG01SG008	4/4/2002	13.5	m,p-Xylenes	106423	5	J		NA	3.2E-06
SG01E	SG01SG008	4/4/2002	13.5	n-Hexane	110543	22			NA	1.7E-05
SG01E	SG01SG008	4/4/2002	13.5	Propylene	115071	250			NA	NA
SG01E	SG01SG008	4/4/2002	13.5	Toluene	108883	11			NA	2.6E-06
								TOTAL	**3.8E-07**	**1.9E-03**
SG25C	SG25SG008	4/3/2002	3.3	Chloroform	67663	13			9.1E-09	1.3E-03
SG25C	SG25SG008	4/3/2002	3.3	Cyclohexane	110827	3	J		NA	3.8E-08
SG25C	SG25SG008	4/3/2002	3.3	Dichlorodifluoromethane	75718	4	J		NA	4.3E-06
SG25C	SG25SG008	4/3/2002	3.3	n-Hexane	110543	3	J		NA	7.1E-06
SG25C	SG25SG008	4/3/2002	3.3	Toluene	108883	3	J		NA	2.7E-06
								TOTAL	**9.1E-09**	**1.3E-03**

Notes:

$\mu g/m^3$	Micrograms per cubic meter
CAS	Chemical Abstracts Service
GMP	Gas monitoring probe
ID	Identification
J	Estimated concentration
JEM	Johnson Ettinger Model
NA	Not available
SG	Soil gas
U	Not detected

Model Inputs:

Lf	15 cm
Ls	Top of Screen varies with each GMP
Ts	15
SCS soil type	S
Dry bulk density	1.5
Total porosity	0.43
Water-filled porosity	0.3
ATc	70
ATnc	30
ED	30
EF	350

ATTACHMENT D2
VLOOKUP TABLES

ATTACHMENT D2: VLOOKUP TABLES

Parcel E Nonstandard Data Gaps Investigation, Landfill Gas Characterization, Hunters Point Shipyard, San Francisco, California

	Soil Properties Lookup Table							Bulk Density		
SCS Soil Type	K_s (cm/h)	α_1 (1/cm)	N (unitless)	M (unitless)	n (cm^3/cm^3)	θ_r (cm^3/cm^3)	Mean Grain Diameter (cm)	(g/cm^3)	θ_w (cm^3/cm^3)	SCS Soil Name
C	0.61	0.01496	1.253	0.2019	0.459	0.098	0.0092	1.43	0.215	Clay
CL	0.34	0.01581	1.416	0.2938	0.442	0.079	0.016	1.48	0.168	Clay Loam
L	0.50	0.01112	1.472	0.3207	0.399	0.061	0.020	1.59	0.148	Loam
LS	4.38	0.03475	1.746	0.4273	0.390	0.049	0.040	1.62	0.076	Loamy Sand
S	26.78	0.03524	3.177	0.6852	0.375	0.053	0.044	1.66	0.054	Sand
SC	0.47	0.03342	1.208	0.1722	0.385	0.117	0.025	1.63	0.197	Sandy Clay
SCL	0.55	0.02109	1.330	0.2481	0.384	0.063	0.029	1.63	0.146	Sandy Clay Loam
SI	1.82	0.00658	1.679	0.4044	0.489	0.050	0.0046	1.35	0.167	Silt
SIC	0.40	0.01622	1.321	0.2430	0.481	0.111	0.0039	1.38	0.216	Silty Clay
SICL	0.46	0.00839	1.521	0.3425	0.482	0.090	0.0056	1.37	0.198	Silty Clay Loam
SIL	0.76	0.00506	1.663	0.3987	0.439	0.065	0.011	1.49	0.180	Silt Loam
SL	1.60	0.02667	1.449	0.3099	0.387	0.039	0.030	1.62	0.103	Sandy Loam

		Chemical Properties Lookup Table																	EPA Original Values	
CAS No.	Chemical	Organic carbon partition coefficient, K_{oc} (cm^3/g)	Diffusivity in air, D_a (cm^2/s)	Diffusivity in water, D_w (cm^2/s)	Pure component water solubility, S (mg/L)	Henry's law constant H' (unitless)	Henry's law constant at reference temperature, H (atm-m^3/mol)	Henry's law constant reference temperature, T_R (°C)	Normal boiling point, T_B (°K)	Critical temperature, T_C (°K)	Enthalpy of vaporization at the normal boiling point, $\Delta H_{v,b}$ (cal/mol)	Unit risk factor, URF $(\mu g/m^3)^{-1}$	Reference conc., RfC (mg/m^3)	Molecular weight, MW (g/mol)	URF extrapolated (X)	RfC extrapolated (X)	Unit Risk Factor Source	Reference Concentration Source	Unit risk factor, URF $(\mu g/m^3)^{-1}$	Reference conc., RfC (mg/m^3)
56235	Carbon tetrachloride	1.74E+02	7.80E-02	8.80E-06	7.93E+02	1.24E+00	3.03E-02	25	349.90	556.60	7,127	**4.2E-05**	2.5E-03	1.54E+02			OEHHA	IRIS	1.5E-05	0.0E+00
57749	Chlordane	1.20E+05	1.18E-02	4.37E-06	5.60E-02	1.99E-03	4.85E-05	25	624.24	885.73	14,000	1.0E-04	7.0E-04	4.10E+02					1.0E-04	7.0E-04
58899	gamma-HCH (Lindane)	1.07E+03	1.42E-02	7.34E-06	7.30E+00	5.73E-04	1.40E-05	25	596.55	839.36	15,000	3.7E-04	1.1E-03	2.91E+02	X	X			3.7E-04	1.1E-03
60297	Ethyl ether	5.73E+00	7.82E-02	8.61E-06	5.68E+04	1.35E+00	3.29E-02	25	307.50	466.74	6,338	0.0E+00	7.0E-01	7.41E+01		X			0.0E+00	7.0E-01
60571	Dieldrin	2.14E+04	1.25E-02	4.74E-06	1.95E-01	6.18E-04	1.51E-05	25	613.32	842.25	17,000	4.6E-03	1.8E-04	3.81E+02		X			4.6E-03	1.8E-04
67641	Acetone	5.75E-01	1.24E-01	1.14E-05	1.00E+06	1.59E-03	3.87E-05	25	329.20	508.10	6,955	0.0E+00	3.5E-01	5.81E+01		X		IRIS	0.0E+00	3.5E-01
67663	Chloroform	3.98E+01	1.04E-01	1.00E-05	7.92E+03	1.50E-01	3.66E-03	25	334.32	536.40	6,988	**5.3E-06**	3.0E-03	1.19E+02			IRIS	NCEA	2.3E-05	0.0E+00
67721	Hexachloroethane	1.78E+03	2.50E-03	6.80E-06	5.00E+01	1.59E-01	3.88E-03	25	458.00	695.00	9,510	4.0E-06	3.5E-03	2.37E+02		X			4.0E-06	3.5E-03
71432	Benzene	5.89E+01	8.80E-02	9.80E-06	1.79E+03	2.27E-01	5.54E-03	25	353.24	562.16	7,342	**2.9E-05**	6.0E-03	7.81E+01			OEHHA	IRIS	7.8E-06	0.0E+00
71556	1,1,1-Trichloroethane	1.10E+02	7.80E-02	8.80E-06	1.33E+03	7.03E-01	1.72E-02	25	347.24	545.00	7,136	0.0E+00	2.2E+00	1.33E+02				NCEA	0.0E+00	2.2E+00
72435	Methoxychlor	9.77E+04	1.56E-02	4.46E-06	1.00E-01	6.46E-04	1.58E-05	25	651.02	848.49	16,000	0.0E+00	1.8E-02	3.46E+02		X			0.0E+00	1.8E-02
72559	DDE	4.47E+06	1.44E-02	5.87E-06	1.20E-01	8.59E-04	2.09E-05	25	636.44	860.38	15,000	9.7E-05	0.0E+00	3.18E+02	X				9.7E-05	0.0E+00
74839	Methyl bromide	1.05E+01	7.28E-02	1.21E-05	1.52E+04	2.55E-01	6.22E-03	25	276.71	467.00	5,714	0.0E+00	5.0E-03	9.49E+01				IRIS	0.0E+00	5.0E-03
74873	Methyl chloride (chloromethane)	2.12E+00	1.26E-01	6.50E-06	5.33E+03	3.61E-01	8.80E-03	25	249.00	416.25	5,115	1.8E-06	9.0E-02	5.05E+01			HEAST	IRIS	1.0E-06	9.0E-02
74908	Hydrogen cyanide	3.80E+00	1.93E-01	2.10E-05	1.00E+06	5.44E-03	1.33E-04	25	299.00	456.70	6,676	0.0E+00	3.0E-03	2.70E+01					0.0E+00	3.0E-03
74953	Methylene bromide	1.26E+01	4.30E-02	8.44E-06	1.19E+04	3.52E-02	8.59E-04	25	370.00	583.00	7,868	0.0E+00	3.5E-02	1.74E+02		X			0.0E+00	3.5E-02
75003	Chloroethane (ethyl chloride)	4.40E+00	2.71E-01	1.15E-05	5.68E+03	3.61E-01	8.80E-03	25	285.30	460.40	5,879	8.3E-07	1.0E+01	6.45E+01	X		NCEA	IRIS	8.3E-07	1.0E+01
75014	Vinyl chloride (chloroethene)	1.86E+01	1.06E-01	1.23E-05	8.80E+03	1.10E+00	2.69E-02	25	259.25	432.00	5,250	**7.8E-05**	1.0E-01	6.25E+01			OEHHA	IRIS	8.8E-06	1.0E-01
75058	Acetonitrile	4.20E+00	1.28E-01	1.66E-05	1.00E+06	1.42E-03	3.45E-05	25	354.60	545.50	7,110	0.0E+00	6.0E-02	4.11E+01					0.0E+00	6.0E-02
75070	Acetaldehyde	1.06E+00	1.24E-01	1.41E-05	1.00E+06	3.23E-03	7.87E-05	25	293.10	466.00	6,157	2.2E-06	9.0E-03	4.41E+01					2.2E-06	9.0E-03
75092	Methylene chloride	1.17E+01	1.01E-01	1.17E-05	1.30E+04	8.96E-02	2.18E-03	25	313.00	510.00	6,706	4.7E-07	3.0E+00	8.49E+01			IRIS	HEAST	4.7E-07	3.0E+00
75150	Carbon disulfide	4.57E+01	1.04E-01	1.00E-05	1.19E+03	1.24E+00	3.02E-02	25	319.00	552.00	6,391	0.0E+00	7.0E-01	7.61E+01					0.0E+00	7.0E-01
75218	Ethylene oxide	1.33E+00	1.04E-01	1.45E-05	3.04E+05	2.27E-02	5.54E-04	25	283.60	469.00	6,104	1.0E-04	0.0E+00	4.41E+01					1.0E-04	0.0E+00
75252	Bromoform	8.71E+01	1.49E-02	1.03E-05	3.10E+03	2.41E-02	5.88E-04	25	422.35	696.00	9,479	1.1E-06	7.0E-02	2.53E+02		X	IRIS	IRIS	1.1E-06	7.0E-02
75274	Bromodichloromethane	5.50E+01	2.98E-02	1.06E-05	6.74E+03	6.54E-02	1.60E-03	25	363.15	585.85	7,800	**3.7E-05**	7.0E-02	1.64E+02	X	X	OEHHA	IRIS	1.8E-05	7.0E-02
75296	2-Chloropropane	9.14E+00	8.88E-02	1.01E-05	3.73E+03	5.93E-01	1.45E-02	25	308.70	485.00	6,286	0.0E+00	1.0E-01	7.85E+01					0.0E+00	1.0E-01
75343	1,1-Dichloroethane	3.16E+01	7.42E-02	1.05E-05	5.06E+03	2.30E-01	5.61E-03	25	330.55	523.00	6,895	1.6E-06	5.0E-01	9.90E+01			OEHHA	HEAST	0.0E+00	5.0E-01
75354	1,1-Dichloroethylene	5.89E+01	9.00E-02	1.04E-05	2.25E+03	1.07E+00	2.60E-02	25	304.75	576.05	6,247	0.0E+00	**7.0E-02**	9.69E+01				IRIS	0.0E+00	2.0E-01
75456	Chlorodifluoromethane	4.79E+01	1.01E-01	1.28E-05	2.00E+00	1.10E+00	2.70E-02	25	232.40	369.30	4,836	0.0E+00	5.0E+01	8.65E+01					0.0E+00	5.0E+01
75694	Trichlorofluoromethane	4.97E+02	8.70E-02	9.70E-06	1.10E+03	3.97E+00	9.68E-02	25	296.70	471.00	5,999	0.0E+00	7.0E-01	1.37E+02				HEAST	0.0E+00	7.0E-01
75718	Dichlorodifluoromethane	4.57E+02	6.65E-02	9.92E-06	2.80E+02	1.40E+01	3.42E-01	25	243.20	384.95	9,421	0.0E+00	2.0E-01	1.21E+02				HEAST	0.0E+00	2.0E-01
76131	1,1,2-Trichloro-1,2,2-trifluoroethane	1.11E+04	7.80E-02	8.20E-06	1.70E+02	1.97E+01	4.80E-01	25	320.70	487.30	6,463	0.0E+00	3.0E+01	1.87E+02				HEAST	0.0E+00	3.0E+01
76448	Heptachlor	1.41E+06	1.12E-02	5.69E-06	1.80E-01	6.05E+01	1.48E+00	25	603.69	846.31	13,000	1.3E-03	1.8E-03	3.73E+02		X			1.3E-03	1.8E-03
77474	Hexachlorocyclopentadiene	2.00E+05	1.61E-02	7.21E-06	1.80E+00	1.10E+00	2.69E-02	25	512.15	746.00	10,931	0.0E+00	2.0E-04	2.73E+02					0.0E+00	2.0E-04
78831	Isobutanol	2.59E+00	8.60E-02	9.30E-06	8.50E+04	4.83E-04	1.18E-05	25	381.04	547.78	10,936	0.0E+00	1.1E+00	7.41E+01		X			0.0E+00	1.1E+00
78875	1,2-Dichloropropane	4.37E+01	7.82E-02	8.73E-06	2.80E+03	1.15E-01	2.79E-03	25	369.52	572.00	7,590	1.9E-05	4.0E-03	1.13E+02	X		HEAST	IRIS	1.9E-05	4.0E-03
78933	Methylethylketone (2-butanone)	2.30E+00	8.08E-02	9.80E-06	2.23E+05	2.29E-03	5.58E-05	25	352.50	536.78	7,481	0.0E+00	1.0E+00	7.21E+01				IRIS	0.0E+00	1.0E+00
79005	1,1,2-Trichloroethane	5.01E+01	7.80E-02	8.80E-06	4.42E+03	3.73E-02	9.11E-04	25	386.15	602.00	8,322	1.6E-05	1.4E-02	1.33E+02		X	IRIS	IRIS	1.6E-05	1.4E-02
79016	Trichloroethylene	1.66E+02	7.90E-02	9.10E-06	1.47E+03	4.21E-01	1.03E-02	25	360.36	544.20	7,505	1.1E-04	3.5E-02	1.31E+02	X		NCEA	NCEA	1.1E-04	4.0E-02
79209	Methyl acetate	3.26E+00	1.04E-01	1.00E-05	2.00E+03	4.84E-03	1.18E-04	25	329.80	506.70	7,260	0.0E+00	3.5E+00	7.41E+01		X			0.0E+00	3.5E+00
79345	1,1,2,2-Tetrachloroethane	9.33E+01	7.10E-02	7.90E-06	2.96E+03	1.41E-02	3.44E-04	25	419.60	661.15	8,996	5.8E-05	2.1E-01	1.68E+02		X	IRIS	IRIS	5.8E-05	2.1E-01
79469	2-Nitropropane	1.17E+01	9.23E-02	1.01E-05	1.70E+04	5.03E-03	1.23E-04	25	393.20	594.00	8,383	2.7E-03	2.0E-02	8.91E+01					2.7E-03	2.0E-02
80626	Methylmethacrylate	6.98E+00	7.70E-02	8.60E-06	1.50E+04	1.38E-02	3.36E-04	25	373.50	567.00	8,975	0.0E+00	7.0E-01	1.00E+02					0.0E+00	7.0E-01
83329	Acenaphthene	7.08E+03	4.21E-02	7.69E-06	3.57E+00	6.34E-03	1.55E-04	25	550.54	803.15	12,155	0.0E+00	2.1E-01	1.54E+02		X			0.0E+00	2.1E-01
86737	Fluorene	1.38E+04	3.63E-02	7.88E-06	1.98E+00	2.60E-03	6.34E-05	25	570.44	870.00	12,666	0.0E+00	1.4E-01	1.66E+02		X			0.0E+00	1.4E-01
87683	Hexachloro-1,3-butadiene	5.37E+04	5.61E-02	6.16E-06	3.20E+00	3.33E-01	8.13E-03	25	486.15	738.00	10,206	2.2E-05	1.1E-03	2.61E+02		X	IRIS	NCEA	2.2E-05	7.0E-04
88722	o-Nitrotoluene	3.24E+02	5.87E-02	8.67E-06	6.50E+02	5.11E-04	1.25E-05	25	495.00	720.00	12,239	0.0E+00	3.5E-02	1.37E+02		X			0.0E+00	3.5E-02
91203	Naphthalene	2.00E+03	5.90E-02	7.50E-06	3.10E+01	1.98E-02	4.82E-04	25	491.14	748.40	10,373	0.0E+00	3.0E-03	1.28E+02					0.0E+00	3.0E-03
91576	2-Methylnaphthalene	2.81E+03	5.22E-02	7.75E-06	2.46E+01	2.12E-02	5.17E-04	25	514.26	761.00	12,600	0.0E+00	7.0E-02	1.42E+02		X			0.0E+00	7.0E-02
92524	Biphenyl	4.38E+03	4.04E-02	8.15E-06	7.45E+00	1.23E-02	2.99E-04	25	529.10	789.00	10,890	0.0E+00	1.8E-01	1.54E+02		X			0.0E+00	1.8E-01
95476	o-Xylene	3.63E+02	8.70E-02	1.00E-05	1.78E+02	2.12E-01	5.18E-03	25	417.60	630.30	8,661	0.0E+00	1.0E-01	1.06E+02		X		IRIS	0.0E+00	7.0E+00

ATTACHMENT D2: VLOOKUP TABLES (Continued)

Parcel E Nonstandard Data Gaps Investigation, Landfill Gas Characterization, Hunters Point Shipyard, San Francisco, California

		Chemical Properties Lookup Table																	EPA Original Values	
CAS No.	Chemical	Organic carbon partition coefficient, K_{oc} (cm^3/g)	Diffusivity in air, D_a (cm^2/s)	Diffusivity in water, D_w (cm^2/s)	Pure component water solubility, S (mg/L)	Henry's law constant H' (unitless)	Henry's law constant at reference temperature, H (atm-m^3/mol)	Henry's law constant reference temperature, T_R (^oC)	Normal boiling point, T_B (^oK)	Critical temperature, T_C (^oK)	Enthalpy of vaporization at the normal boiling point, $\Delta H_{v,b}$ (cal/mol)	Unit risk factor, URF ($\mu g/m^3)^{-1}$	Reference conc., RfC (mg/m^3)	Molecular weight, MW (g/mol)	URF extrapolated (X)	RfC extrapolated (X)	Unit Risk Factor Source	Reference Concentration Source	Unit risk factor, URF ($\mu g/m^3)^{-1}$	Reference conc., RfC (mg/m^3)
95501	1,2-Dichlorobenzene	6.17E+02	6.90E-02	7.90E-06	1.56E+02	7.77E-02	1.90E-03	25	453.57	705.00	9,700	0.0E+00	2.0E-01	1.47E+02				HEAST	0.0E+00	2.0E-01
95578	2-Chlorophenol	3.88E+02	5.01E-02	9.46E-06	2.20E+04	1.60E-02	3.90E-04	25	447.53	675.00	9,572	0.0E+00	1.8E-02	1.29E+02		X			0.0E+00	1.8E-02
95636	1,2,4-Trimethylbenzene	1.35E+03	6.06E-02	7.92E-06	5.70E+01	2.52E-01	6.14E-03	25	442.30	649.17	9,369	0.0E+00	6.0E-03	1.20E+02				NCEA	0.0E+00	6.0E-03
96184	1,2,3-Trichloropropane	2.20E+01	7.10E-02	7.90E-06	1.75E+03	1.67E-02	4.08E-04	25	430.00	652.00	9,171	5.7E-04	4.9E-03	1.47E+02	X				5.7E-04	4.9E-03
96333	Methyl acrylate	4.53E+00	9.76E-02	1.02E-05	6.00E+04	7.68E-03	1.87E-04	25	353.70	536.00	7,749	0.0E+00	1.1E-01	8.61E+01		X			0.0E+00	1.1E-01
97632	Ethylmethacrylate	2.95E+01	6.53E-02	8.37E-06	3.67E+03	3.44E-02	8.40E-04	25	390.00	571.00	10,957	0.0E+00	3.2E-01	1.14E+02		X			0.0E+00	3.2E-01
98066	tert-Butylbenzene	7.71E+02	5.65E-02	8.02E-06	2.95E+01	4.87E-01	1.19E-02	25	442.10	1220.00	8,980	0.0E+00	1.4E-01	1.34E+02		X			0.0E+00	1.4E-01
98828	Cumene	4.89E+02	6.50E-02	7.10E-06	6.13E+01	4.74E+01	1.16E+00	25	425.56	631.10	10,335	0.0E+00	4.0E-01	1.20E+02					0.0E+00	4.0E-01
98862	Acetophenone	5.77E+01	6.00E-02	8.73E-06	6.13E+03	4.38E-04	1.07E-05	25	475.00	709.50	11,732	0.0E+00	3.5E-01	1.20E+02		X			0.0E+00	3.5E-01
98953	Nitrobenzene	6.46E+01	7.60E-02	8.60E-06	2.09E+03	9.82E-04	2.39E-05	25	483.95	719.00	10,566	0.0E+00	2.0E-03	1.23E+02					0.0E+00	2.0E-03
100414	Ethylbenzene	3.63E+02	7.50E-02	7.80E-06	1.69E+02	3.22E-01	7.86E-03	25	409.34	617.20	8,501	1.1E-06	1.0E+00	1.06E+02			NCEA	IRIS	1.1E-06	1.0E+00
100425	Styrene	7.76E+02	7.10E-02	8.00E-06	3.10E+02	1.12E-01	2.74E-03	25	418.31	636.00	8,737	0.0E+00	**9.0E-01**	1.04E+02				IRIS	0.0E+00	1.0E+00
100447	Benzylchloride	6.14E+01	7.50E-02	7.80E-06	5.25E+02	1.70E-02	4.14E-04	25	452.00	685.00	8,773	4.9E-05	1.0E-02	1.27E+02	X		IRIS	NCEA	4.9E-05	0.0E+00
100527	Benzaldehyde	4.59E+01	7.21E-02	9.07E-06	3.30E+03	9.73E-04	2.37E-05	25	452.00	695.00	11,658	0.0E+00	3.5E-01	1.06E+02		X			0.0E+00	3.5E-01
103651	n-Propylbenzene	5.62E+02	6.01E-02	7.83E-06	6.00E+01	4.37E-01	1.07E-02	25	432.20	630.00	9,123	0.0E+00	1.4E-01	1.20E+02		X			0.0E+00	1.4E-01
104518	n-Butylbenzene	1.11E+03	5.70E-02	8.12E-06	2.00E+00	5.38E-01	1.31E-02	25	456.46	660.50	9,290	0.0E+00	1.4E-01	1.34E+02		X			0.0E+00	1.4E-01
106423	p-Xylene	3.89E+02	7.69E-02	8.44E-06	1.85E+02	3.13E-01	7.64E-03	25	411.52	616.20	8,525	0.0E+00	1.0E-01	1.06E+02		X		IRIS	0.0E+00	7.0E+00
106467	1,4-Dichlorobenzene	6.17E+02	6.90E-02	7.90E-06	7.90E+01	9.82E-02	2.39E-03	25	447.21	684.75	9,271	**1.1E-05**	1.1E-01	1.47E+02			OEHHA	IRIS	0.0E+00	8.0E-01
106934	1,2-Dibromoethane (ethylene dibromide)	2.50E+01	2.17E-02	1.19E-05	4.18E+03	3.04E-02	7.41E-04	25	404.60	583.00	8,310	2.2E-04	2.0E-04	1.88E+02			IRIS	HEAST	2.2E-04	2.0E-04
106990	1,3-Butadiene	1.91E+01	2.49E-01	1.08E-05	7.35E+02	3.01E+00	7.34E-02	25	268.60	425.00	5,370	2.8E-04	2.0E-03	5.41E+01			IRIS	IRIS	2.8E-04	0.0E+00
107028	Acrolein	2.76E+00	1.05E-01	1.22E-05	2.13E+05	4.99E-03	1.22E-04	25	325.60	506.00	6,731	0.0E+00	2.0E-05	5.61E+01					0.0E+00	2.0E-05
107062	1,2-Dichloroethane	1.74E+01	1.04E-01	9.90E-06	8.52E+03	4.00E-02	9.77E-04	25	356.65	561.00	7,643	2.6E-05	4.9E-03	9.90E+01			IRIS	NCEA	2.6E-05	0.0E+00
107131	Acrylonitrile	5.90E+00	1.22E-01	1.34E-05	7.40E+04	4.21E-03	1.03E-04	25	350.30	519.00	7,786	6.8E-05	2.0E-03	5.31E+01					6.8E-05	2.0E-03
108054	Vinyl acetate	5.25E+00	8.50E-02	9.20E-06	2.00E+04	2.09E-02	5.10E-04	25	345.65	519.13	7,800	0.0E+00	2.0E-01	8.61E+01				IRIS	0.0E+00	2.0E-01
108101	Methylisobutylketone (4-methyl-2-pentanone)	9.06E+00	7.50E-02	7.80E-06	1.90E+04	5.64E-03	1.38E-04	25	389.50	571.00	8,243	0.0E+00	8.0E-02	1.00E+02				IRIS	0.0E+00	8.0E-02
108383	m-Xylene	4.07E+02	7.00E-02	7.80E-06	1.61E+02	3.00E-01	7.32E-03	25	412.27	617.05	8,523	0.0E+00	7.0E+00	1.06E+02		X			0.0E+00	7.0E+00
108678	1,3,5-Trimethylbenzene	1.35E+03	6.02E-02	8.67E-06	2.00E+00	2.41E-01	5.87E-03	25	437.89	637.25	9,321	0.0E+00	6.0E-03	1.20E+02				NCEA	0.0E+00	6.0E-03
108872	Methylcyclohexane	7.85E+01	7.35E-02	8.52E-06	1.40E+01	4.22E+00	1.03E-01	25	373.90	572.20	7,474	0.0E+00	3.0E+00	9.82E+01					0.0E+00	3.0E+00
108883	Toluene	1.82E+02	8.70E-02	8.60E-06	5.26E+02	2.72E-01	6.62E-03	25	383.78	591.79	7,930	0.0E+00	**3.0E-01**	9.21E+01				IRIS	0.0E+00	4.0E-01
108907	Chlorobenzene	2.19E+02	7.30E-02	8.70E-06	4.72E+02	1.51E-01	3.69E-03	25	404.87	632.40	8,410	0.0E+00	6.0E-02	1.13E+02				IRIS	0.0E+00	6.0E-02
109693	1-Chlorobutane	1.72E+01	8.26E-02	1.00E-05	1.10E+03	6.93E-01	1.69E-02	25	351.60	542.00	7,263	0.0E+00	1.4E+00	9.26E+01		X			0.0E+00	1.4E+00
110009	Furan	1.86E+01	1.04E-01	1.22E-05	1.00E+04	2.21E-01	5.39E-03	25	304.60	490.20	6,477	0.0E+00	3.5E-03	6.81E+01		X			0.0E+00	3.5E-03
110543	Hexane	4.34E+01	2.00E-01	7.77E-06	1.24E+01	6.82E+01	1.66E+00	25	341.70	508.00	6,895	0.0E+00	2.0E-01	8.62E+01				IRIS	0.0E+00	2.0E-01
110827	Cyclohexane	1.6E+02	8.0E-02	9.0E-06	5.5E+01	8.2E+00	2.00E-01	25	353.70	553.40	7,160	0.0E+00	2.0E+01	8.42E+01				NCEA	NA	NA
111444	Bis(2-chloroethyl)ether	1.55E+01	6.92E-02	7.53E-06	1.72E+04	7.36E-04	1.80E-05	25	451.15	659.79	10,803	3.3E-04	0.0E+00	1.43E+02					3.3E-04	0.0E+00
115297	Endosulfan	2.14E+03	1.15E-02	4.55E-06	5.10E-01	4.58E-04	1.12E-05	25	674.43	942.94	14,000	0.0E+00	2.1E-02	4.07E+02		X			0.0E+00	2.1E-02
118741	Hexachlorobenzene	5.50E+04	5.42E-02	5.91E-06	5.00E-03	5.40E-02	1.32E-03	25	582.55	825.00	14,447	4.6E-04	2.8E-03	2.85E+02		X			4.6E-04	2.8E-03
120821	1,2,4-Trichlorobenzene	1.78E+03	3.00E-02	8.23E-06	4.88E+01	5.81E-02	1.42E-03	25	486.15	725.00	10,471	0.0E+00	2.0E-01	1.81E+02				HEAST	0.0E+00	2.0E-01
123739	Crotonaldehyde (2-butenal)	4.82E+00	9.56E-02	1.07E-05	3.69E+04	7.99E-04	1.95E-05	25	375.20	568.00	9	5.4E-04	0.0E+00	7.01E+01	X				5.4E-04	0.0E+00
124481	Chlorodibromomethane	6.31E+01	1.96E-02	1.05E-05	2.60E+03	3.20E-02	7.81E-04	25	416.14	678.20	5,900	**2.7E-05**	7.0E-02	2.08E+02	X	X	OEHHA	IRIS	2.4E-05	7.0E-02
126987	Methacrylonitrile	3.58E+01	1.12E-01	1.32E-05	2.54E+04	1.01E-02	2.46E-04	25	363.30	554.00	7,600	0.0E+00	7.0E-04	6.71E+01					0.0E+00	7.0E-04
126998	2-Chloro-1,3-butadiene (chloroprene)	6.73E+01	8.58E-02	1.03E-05	2.12E+03	4.91E-01	1.20E-02	25	332.40	525.00	8,075	0.0E+00	7.0E-03	8.85E+01					0.0E+00	7.0E-03
127184	Tetrachloroethylene	1.55E+02	7.20E-02	8.20E-06	2.00E+02	7.53E-01	1.84E-02	25	394.40	620.20	8,288	**5.9E-06**	**3.5E-02**	1.66E+02			OEHHA	NCEA	3.0E-06	0.0E+00
129000	Pyrene	1.05E+05	2.72E-02	7.24E-06	1.35E+00	4.50E-04	1.10E-05	25	667.95	936	14370	0.0E+00	1.1E-01	2.02E+02		X			0.0E+00	1.1E-01
132649	Dibenzofuran	5.15E+03	2.38E-02	6.00E-06	3.10E+00	5.15E-04	1.26E-05	25	560	824	66400	0.0E+00	1.4E-02	1.68E+02		X			0.0E+00	1.4E-02
135988	sec-Butylbenzene	9.66E+02	5.70E-02	8.12E-06	3.94E+00	5.68E-01	1.39E-02	25	446.5	679	88730	0.0E+00	1.4E-01	1.34E+02		X			0.0E+00	1.4E-01
141786	Ethylacetate	6.44E+00	7.32E-02	9.70E-06	8.03E+04	5.64E-03	1.38E-04	25	350.26	523.3	7633.66	0.0E+00	3.2E+00	8.81E+01		X			0.0E+00	3.2E+00
156592	cis-1,2-Dichloroethylene	3.55E+01	7.36E-02	1.13E-05	3.50E+03	1.67E-01	4.07E-03	25	333.65	544	7192	0.0E+00	3.5E-02	9.69E+01		X		HEAST	0.0E+00	3.5E-02
156605	trans-1,2-Dichloroethylene	5.25E+01	7.07E-02	1.19E-05	6.30E+03	3.84E-01	9.36E-03	25	320.85	516.5	6717	0.0E+00	7.0E-02	9.69E+01		X		IRIS	0.0E+00	7.0E-02
205992	Benzo(b)fluoranthene	1.23E+06	2.26E-02	5.56E-06	1.50E-03	4.54E-03	1.11E-04	25	715.9	969.27	17000	2.1E-04	0.0E+00	2.52E+02	X				2.1E-04	0.0E+00
218019	Chrysene	3.98E+05	2.48E-02	6.21E-06	6.30E-03	3.87E-03	9.44E-05	25	714.15	979	16455	2.1E-06	0.0E+00	2.28E+02	X				2.1E-06	0.0E+00
309002	Aldrin	2.45E+06	1.32E-02	4.86E-06	1.70E-02	6.95E-03	1.70E-04	25	603.01	839.37	15000	4.9E-03	1.1E-04	3.65E+02		X			4.9E-03	1.1E-04
319846	alpha-HCH (alpha-BHC)	1.23E+03	1.42E-02	7.34E-06	2.00E+00	4.34E-04	1.06E-05	25	596.55	839.36	15000	1.8E-03	0.0E+00	2.91E+02					1.8E-03	0.0E+00
541731	1,3-Dichlorobenzene	1.98E+03	6.92E-02	7.86E-06	1.34E+02	1.27E-01	3.09E-03	25	446	684	9230.18	0.0E+00	3.2E-03	1.47E+02		X		NCEA	0.0E+00	1.1E-01
542756	1,3-Dichloropropene	4.57E+01	6.26E-02	1.00E-05	2.80E+03	7.24E-01	1.77E-02	25	381.15	587.38	7900	**1.6E-05**	2.0E-02	1.11E+02			IRIS	IRIS	4.0E-06	2.0E-02
630206	1,1,1,2-Tetrachloroethane	1.16E+02	7.10E-02	7.90E-06	1.10E+03	9.90E-02	2.41E-03	25	403.5	624	9768.282525	7.4E-06	1.1E-01	1.68E+02		X			7.4E-06	1.1E-01
1634044	MTBE	7.26E+00	1.02E-01	1.05E-05	5.10E+04	2.56E-02	6.23E-04	25	328.3	497.1	6677.66	2.6E-07	3.0E+00	8.82E+01			OEHHA	IRIS	0.0E+00	3.0E+00
7439976	Mercury (elemental)	5.20E+01	3.07E-02	6.30E-06	2.00E+01	4.40E-01	1.07E-02	25	629.88	1750	14127	0.0E+00	3.0E-04	2.01E+02					0.0E+00	3.0E-04

Notes:

HEAST U.S. Environmental Protection Agency Health Effects Summary Tables

IRIS U.S. Environmental Protection Agency Integrated Risk Information System

OEHHA California Environmental Protection Agency

NCEA National Center for Environmental Assessment

Values in bold are California Environmental Protection Agency OEHHA values

ATTACHMENT D3
JEM NONDETECTS BACKUP SPREADSHEET

ATTACHMENT D3: JOHNSON ETTINGER MODEL NONDETECTS BACKUP SPREADSHEET

Parcel E Nonstandard Data Gaps Investigation, Landfill Gas Characterization, Hunters Point Shipyard, San Francisco, California

Point ID	Sampling ID	Sample Date	Depth to Top of Screen (feet)	Analyte	CAS Number	1/2 Detection Limit ($\mu g/m^3$)	Qualifier	Average Concentration ($\mu g/m^3$)	Risk Calculated by the JEM	Hazard Quotient
GMP13	GMP13SG001	6/5/2002	6	1,1,2,2-Tetrachloroethane	79345	3	U		1.2E-08	2.2E-06
GMP13	GMP13SG001	6/5/2002	6	1,1,2-Trichloroethane	79005	2.5	U		2.6E-09	2.7E-05
GMP13	GMP13SG001	6/5/2002	6	1,1-Dichloroethene	75354	2	U		NA	4.5E-06
GMP13	GMP13SG001	6/5/2002	6	1,2-Dibromoethane	106934	3.5	U		2.1E-08	1.1E-03
GMP13	GMP13SG001	6/5/2002	6	1,2-Dichloroethane	107062	2	U		4.2E-09	7.7E-05
GMP13	GMP13SG001	6/5/2002	6	1,3-Butadiene	106990	1	U		4.2E-08	1.8E-04
GMP13	GMP13SG001	6/5/2002	6	Benzyl Chloride	100447	2.5	U		8.1E-09	3.9E-05
GMP13	GMP13SG001	6/5/2002	6	Bromodichloromethane	75274	3	U		3.1E-09	2.8E-06
GMP13	GMP13SG001	6/5/2002	6	Carbon Tetrachloride	56235	3	U		7.6E-09	1.7E-04
GMP13	GMP13SG001	6/5/2002	6	Dibromochloromethane	124481	4	U		2.5E-09	3.0E-06
GMP13	GMP13SG001	6/5/2002	6	Hexachlorobutadiene	87683	4.5	U		4.5E-09	4.3E-04
GMP13	GMP13SG001	6/5/2002	6	Trichloroethene	79016	2.5	U		1.7E-08	1.0E-05
								TOTAL	**1.2E-07**	**2.0E-03**
GMP14	GMP14SG001	6/5/2002	6	1,1,2,2-Tetrachloroethane	79345	3	U		1.2E-08	2.2E-06
GMP14	GMP14SG001	6/5/2002	6	1,1,2-Trichloroethane	79005	2.5	U		2.6E-09	2.7E-05
GMP14	GMP14SG001	6/5/2002	6	1,1-Dichloroethene	75354	1.5	U		NA	3.4E-06
GMP14	GMP14SG001	6/5/2002	6	1,2-Dibromoethane	106934	3	U		1.8E-08	9.5E-04
GMP14	GMP14SG001	6/5/2002	6	1,2-Dichloroethane	107062	1.5	U		3.1E-09	5.8E-05
GMP14	GMP14SG001	6/5/2002	6	1,3-Butadiene	106990	1	U		4.2E-08	1.8E-04
GMP14	GMP14SG001	6/5/2002	6	Benzyl Chloride	100447	2	U		6.5E-09	3.1E-05
GMP14	GMP14SG001	6/5/2002	6	Bromodichloromethane	75274	3	U		3.1E-09	2.8E-06
GMP14	GMP14SG001	6/5/2002	6	Dibromochloromethane	124481	3.5	U		2.1E-09	2.7E-06
GMP14	GMP14SG001	6/5/2002	6	Hexachlorobutadiene	87683	4.5	U		4.5E-09	4.3E-04
GMP14	GMP14SG001	6/5/2002	6	Trichloroethene	79016	2.5	U		1.7E-08	1.0E-05
								TOTAL	**1.1E-07**	**1.7E-03**
GMP15	GMP15SG001	6/5/2002	6	1,1,2,2-Tetrachloroethane	79345	3	U		1.2E-08	2.2E-06
GMP15	GMP15SG001	6/5/2002	6	1,1,2-Trichloroethane	79005	2.5	U		2.6E-09	2.7E-05
GMP15	GMP15SG001	6/5/2002	6	1,1-Dichloroethene	75354	1.5	U		NA	3.4E-06
GMP15	GMP15SG001	6/5/2002	6	1,2-Dibromoethane	106934	3	U		1.8E-08	9.5E-04
GMP15	GMP15SG001	6/5/2002	6	1,2-Dichloroethane	107062	1.5	U		3.1E-09	5.8E-05
GMP15	GMP15SG001	6/5/2002	6	1,3-Butadiene	106990	1	U		4.2E-08	1.8E-04
GMP15	GMP15SG001	6/5/2002	6	Benzyl Chloride	100447	2	U		6.5E-09	3.1E-05
GMP15	GMP15SG001	6/5/2002	6	Bromodichloromethane	75274	3	U		3.1E-09	2.8E-06
GMP15	GMP15SG001	6/5/2002	6	Dibromochloromethane	124481	3.5	U		2.1E-09	2.7E-06
GMP15	GMP15SG001	6/5/2002	6	Hexachlorobutadiene	87683	4.5	U		4.5E-09	4.3E-04
GMP15	GMP15SG001	6/5/2002	6	Trichloroethene	79016	2.5	U		1.7E-08	1.0E-05
								TOTAL	**1.1E-07**	**1.7E-03**

ATTACHMENT D3: JOHNSON ETTINGER MODEL NONDETECTS BACKUP SPREADSHEET (Continued)

Parcel E Nonstandard Data Gaps Investigation, Landfill Gas Characterization, Hunters Point Shipyard, San Francisco, California

Point ID	Sampling ID	Sample Date	Depth to Top of Screen (feet)	Analyte	CAS Number	1/2 Detection Limit ($\mu g/m^3$)	Qualifier	Average Concentration ($\mu g/m^3$)	Risk Calculated by the JEM	Hazard Quotient
GMP16	GMP16SG001	6/5/2002	5	1,1,2,2-Tetrachloroethane	79345	3	U			
GMP16	GMP16SG002	6/5/2002	5	1,1,2,2-Tetrachloroethane	79345	3	U	3.00	1.4E-08	2.6E-06
GMP16	GMP16SG001	6/5/2002	5	1,1,2-Trichloroethane	79005	2.5	U			
GMP16	GMP16SG002	6/5/2002	5	1,1,2-Trichloroethane	79005	2.5	U	2.50	3.1E-09	3.2E-05
GMP16	GMP16SG001	6/5/2002	5	1,1-Dichloroethene	75354	1.5	U			
GMP16	GMP16SG002	6/5/2002	5	1,1-Dichloroethene	75354	1.5	U	1.50	NA	4.0E-06
GMP16	GMP16SG001	6/5/2002	5	1,2-Dibromoethane	106934	3	U			
GMP16	GMP16SG002	6/5/2002	5	1,2-Dibromoethane	106934	3	U	3.00	2.2E-08	1.1E-03
GMP16	GMP16SG001	6/5/2002	5	1,2-Dichloroethane	107062	1.5	U			
GMP16	GMP16SG002	6/5/2002	5	1,2-Dichloroethane	107062	1.5	U	1.50	3.7E-09	6.8E-05
GMP16	GMP16SG001	6/5/2002	5	1,3-Butadiene	106990	1	U			
GMP16	GMP16SG002	6/5/2002	5	1,3-Butadiene	106990	1	U	1.00	4.8E-08	2.0E-04
GMP16	GMP16SG001	6/5/2002	5	Benzyl Chloride	100447	2	U			
GMP16	GMP16SG002	6/5/2002	5	Benzyl Chloride	100447	2	U	2.00	7.7E-09	3.7E-05
GMP16	GMP16SG001	6/5/2002	5	Carbon Tetrachloride	56235	3	U			
GMP16	GMP16SG002	6/5/2002	5	Carbon Tetrachloride	56235	2.5	U	2.75	8.3E-09	1.8E-04
GMP16	GMP16SG001	6/5/2002	5	Hexachlorobutadiene	87683	4.5	U			
GMP16	GMP16SG002	6/5/2002	5	Hexachlorobutadiene	87683	4.5	U	4.50	5.3E-09	5.2E-04
GMP16	GMP16SG001	6/5/2002	5	Trichloroethene	79016	2.5	U			
GMP16	GMP16SG002	6/5/2002	5	Trichloroethene	79016	2.5	U	2.50	2.0E-08	1.2E-05
								TOTAL	**1.3E-07**	**2.2E-03**
GMP17	GMP17SG001	6/5/2002	6	1,1,2,2-Tetrachloroethane	79345	3	U		1.2E-08	2.2E-06
GMP17	GMP17SG001	6/5/2002	6	1,1,2-Trichloroethane	79005	2.5	U		2.6E-09	2.7E-05
GMP17	GMP17SG001	6/5/2002	6	1,1-Dichloroethene	75354	1.5	U		NA	3.4E-06
GMP17	GMP17SG001	6/5/2002	6	1,2-Dibromoethane	106934	3	U		1.8E-08	9.5E-04
GMP17	GMP17SG001	6/5/2002	6	1,2-Dichloroethane	107062	1.5	U		3.1E-09	5.8E-05
GMP17	GMP17SG001	6/5/2002	6	1,3-Butadiene	106990	1	U		4.2E-08	1.8E-04
GMP17	GMP17SG001	6/5/2002	6	Benzyl Chloride	100447	2	U		6.5E-09	3.1E-05
GMP17	GMP17SG001	6/5/2002	6	Bromodichloromethane	75274	3	U		3.1E-09	2.8E-06
GMP17	GMP17SG001	6/5/2002	6	Carbon Tetrachloride	56235	2.5	U		6.3E-09	1.4E-04
GMP17	GMP17SG001	6/5/2002	6	Chloroform	67663	2	U		8.2E-10	1.2E-04
GMP17	GMP17SG001	6/5/2002	6	Dibromochloromethane	124481	3.5	U		2.1E-09	2.7E-06
GMP17	GMP17SG001	6/5/2002	6	Hexachlorobutadiene	87683	4.5	U		4.5E-09	4.3E-04
GMP17	GMP17SG001	6/5/2002	6	Trichloroethene	79016	2.5	U		1.7E-08	1.0E-05
								TOTAL	**1.2E-07**	**2.0E-03**

ATTACHMENT D3: JOHNSON ETTINGER MODEL NONDETECTS BACKUP SPREADSHEET (Continued)

Parcel E Nonstandard Data Gaps Investigation, Landfill Gas Characterization, Hunters Point Shipyard, San Francisco, California

Point ID	Sampling ID	Sample Date	Depth to Top of Screen (feet)	Analyte	CAS Number	1/2 Detection Limit (µg/m^3)	Qualifier	Average Concentration (µg/m^3)	Risk Calculated by the JEM	Hazard Quotient
GMP18	GMP18SG001	6/5/2002	6	1,1,2,2-Tetrachloroethane	79345	3	U		1.2E-08	2.2E-06
GMP18	GMP18SG001	6/5/2002	6	1,1,2-Trichloroethane	79005	2.5	U		2.6E-09	2.7E-05
GMP18	GMP18SG001	6/5/2002	6	1,1-Dichloroethene	75354	1.5	U		NA	3.4E-06
GMP18	GMP18SG001	6/5/2002	6	1,2-Dibromoethane	106934	3.5	U		2.1E-08	1.1E-03
GMP18	GMP18SG001	6/5/2002	6	1,2-Dichloroethane	107062	1.5	U		3.1E-09	5.8E-05
GMP18	GMP18SG001	6/5/2002	6	1,3-Butadiene	106990	1	U		4.2E-08	1.8E-04
GMP18	GMP18SG001	6/5/2002	6	Benzyl Chloride	100447	2	U		6.5E-09	3.1E-05
GMP18	GMP18SG001	6/5/2002	6	Bromodichloromethane	75274	3	U		3.1E-09	2.8E-06
GMP18	GMP18SG001	6/5/2002	6	Carbon Tetrachloride	56235	2.5	U		6.3E-09	1.4E-04
GMP18	GMP18SG001	6/5/2002	6	Chloroform	67663	2	U		8.2E-10	1.2E-04
GMP18	GMP18SG001	6/5/2002	6	Dibromochloromethane	124481	3.5	U		2.1E-09	2.7E-06
GMP18	GMP18SG001	6/5/2002	6	Hexachlorobutadiene	87683	4.5	U		4.5E-09	4.3E-04
								TOTAL	**1.0E-07**	**2.1E-03**
GMP19	GMP19SG001	6/5/2002	4.5	1,1,2,2-Tetrachloroethane	79345	3	U		1.5E-08	2.9E-06
GMP19	GMP19SG001	6/5/2002	4.5	1,1,2-Trichloroethane	79005	2.5	U		3.4E-09	3.5E-05
GMP19	GMP19SG001	6/5/2002	4.5	1,1-Dichloroethene	75354	1.5	U		NA	4.4E-06
GMP19	GMP19SG001	6/5/2002	4.5	1,2-Dibromoethane	106934	3.5	U		2.8E-08	1.5E-03
GMP19	GMP19SG001	6/5/2002	4.5	1,2-Dichloroethane	107062	1.5	U		4.1E-09	7.5E-05
GMP19	GMP19SG001	6/5/2002	4.5	Benzyl Chloride	100447	2	U		8.5E-09	4.1E-05
GMP19	GMP19SG001	6/5/2002	4.5	Carbon Tetrachloride	56235	2.5	U		8.3E-09	1.8E-04
GMP19	GMP19SG001	6/5/2002	4.5	Dibromochloromethane	124481	3.5	U		2.9E-09	3.6E-06
GMP19	GMP19SG001	6/5/2002	4.5	Trichloroethene	79016	2.5	U		2.2E-08	1.3E-05
								TOTAL	**9.2E-08**	**1.9E-03**
SG01E	SG01SG008	4/4/2002	13.5	1,1,2,2-Tetrachloroethane	79345	4.885	U		8.6E-09	1.6E-06
SG01E	SG01SG008	4/4/2002	13.5	1,1,2-Trichloroethane	79005	3.87	U		1.8E-09	1.9E-05
SG01E	SG01SG008	4/4/2002	13.5	1,1-Dichloroethene	75354	2.82	U		NA	2.9E-06
SG01E	SG01SG008	4/4/2002	13.5	1,2-Dibromoethane	106934	5.475	U		1.4E-08	7.6E-04
SG01E	SG01SG008	4/4/2002	13.5	1,2-Dichloroethane	107062	2.885	U		2.8E-09	5.2E-05
SG01E	SG01SG008	4/4/2002	13.5	Benzyl Chloride	100447	3.695	U		5.5E-09	2.7E-05
SG01E	SG01SG008	4/4/2002	13.5	Bromodichloromethane	75274	4.745	U		2.2E-09	1.9E-06
SG01E	SG01SG008	4/4/2002	13.5	Carbon Tetrachloride	56235	4.48	U		5.1E-09	1.1E-04
SG01E	SG01SG008	4/4/2002	13.5	Dibromochloromethane	124481	6.055	U		1.6E-09	2.0E-06
SG01E	SG01SG008	4/4/2002	13.5	Hexachlorobutadiene	87683	7.595	U		3.4E-09	3.2E-04
SG01E	SG01SG008	4/4/2002	13.5	Tetrachloroethene	127184	4.83	U		7.2E-10	8.2E-06
SG01E	SG01SG008	4/4/2002	13.5	Trichloroethene	79016	3.87	U		1.2E-08	7.2E-06
SG01E	SG01SG008	4/4/2002	13.5	vinyl chloride	75014	1.82	U		5.2E-09	1.5E-06
								TOTAL	**6.3E-08**	**1.3E-03**

ATTACHMENT D3: JOHNSON ETTINGER MODEL NONDETECTS BACKUP SPREADSHEET (Continued)

Parcel E Nonstandard Data Gaps Investigation, Landfill Gas Characterization, Hunters Point Shipyard, San Francisco, California

Point ID	Sampling ID	Sample Date	Depth to Top of Screen (feet)	Analyte	CAS Number	1/2 Detection Limit ($\mu g/m^3$)	Qualifier	Average Concentration ($\mu g/m^3$)	Risk Calculated by the JEM	Hazard Quotient
SG25C	SG25SG008	4/3/2002	3.3	1,1,2,2-Tetrachloroethane	79345	4.885	U		3.3E-08	6.2E-06
SG25C	SG25SG008	4/3/2002	3.3	1,1,2-Trichloroethane	79005	3.87	U		6.9E-09	7.2E-05
SG25C	SG25SG008	4/3/2002	3.3	1,1-Dichloroethene	75354	2.82	U		NA	1.1E-05
SG25C	SG25SG008	4/3/2002	3.3	1,2-Dibromoethane	106934	5.475	U		6.1E-08	3.2E-03
SG25C	SG25SG008	4/3/2002	3.3	1,2-Dichloroethane	107062	2.885	U		1.0E-08	1.9E-04
SG25C	SG25SG008	4/3/2002	3.3	1,3-Butadiene	106990	1.57	U		1.5E-07	6.1E-04
SG25C	SG25SG008	4/3/2002	3.3	Benzene	71432	2.275	U		7.7E-09	1.0E-04
SG25C	SG25SG008	4/3/2002	3.3	Benzyl Chloride	100447	3.695	U		2.1E-08	1.0E-04
SG25C	SG25SG008	4/3/2002	3.3	Bromodichloromethane	75274	4.745	U		9.2E-09	8.3E-06
SG25C	SG25SG008	4/3/2002	3.3	Carbon Tetrachloride	56235	4.48	U		2.0E-08	4.4E-04
SG25C	SG25SG008	4/3/2002	3.3	Dibromochloromethane	124481	6.055	U		7.0E-09	8.6E-06
SG25C	SG25SG008	4/3/2002	3.3	Hexachlorobutadiene	87683	7.595	U		1.4E-08	1.3E-03
SG25C	SG25SG008	4/3/2002	3.3	Tetrachloroethene	127184	4.83	U		2.8E-09	3.2E-05
SG25C	SG25SG008	4/3/2002	3.3	Trichloroethene	79016	3.87	U		4.5E-08	2.8E-05
SG25C	SG25SG008	4/3/2002	3.3	vinyl chloride	75014	1.82	U		1.9E-08	5.6E-06
								TOTAL	**4.1E-07**	**6.1E-03**

Notes:

$\mu g/m^3$	Micrograms per cubic meter
CAS	Chemical Abstracts Service
GMP	Gas monitoring probe
ID	Identification
J	Estimated concentration
JEM	Johnson Ettinger Model
NA	Not available
SG	Soil gas
U	Not detected

Model Inputs:

Lf	15 cm
Ls	Top of Screen varies with each GMP
Ts	15
SCS soil type	S
Dry bulk density	1.5
Total porosity	0.43
Water-filled porosity	0.3
ATc	70
ATnc	30
ED	30
EF	350

APPENDIX E
RESPONSES TO REGULATORY AGENCY COMMENTS ON THE DRAFT PARCEL E NONSTANDARD DATA GAPS INVESTIGATION, LANDFILL GAS CHARACTERIZATION, HUNTERS POINT SHIPYARD, SAN FRANCISCO, CALIFORNIA

RESPONSES TO REGULATORY AGENCY COMMENTS ON THE DRAFT PARCEL E NONSTANDARD DATA GAPS INVESTIGATION LANDFILL GAS CHARACTERIZATION HUNTERS POINT SHIPYARD, SAN FRANCISCO, CALIFORNIA

This document presents the U.S. Department of the Navy's (Navy) responses to comments from the regulatory agencies on the "Draft Parcel E Nonstandard Data Gaps Investigation, Landfill Gas Characterization, Hunters Point Shipyard, San Francisco, California," dated May 15, 2003. The comments addressed below were received from U.S. Environmental Protection Agency (EPA) on June 20, 2003, and the California Department of Toxic Substances Control (DTSC) on July 2 and July 8, 2003.

RESPONSES TO EPA COMMENTS

General Comment

1. **Comment:** **It is unclear why the detection limits for vinyl chloride, benzene, tetrachloroethene (PCE), carbon tetrachloride and trichloroethylene (TCE) exceeded their Preliminary Remediation Goals (PRGs) for ambient air and Building 830 crawlspace samples. The PRG for each of these compounds is less than 1 microgram per meter cubed (ug/m3), but the detection limits were in excess of 1 ug/m3. For example, the PRG for TCE in ambient air is 0.017 ug/m3, but detection limits ranged from 4 to 19 ug/m3. Similarly, for vinyl chloride, the PRG is 0.11 ug/m3 but detection limits ranged from 2 to 9 ug/m3. For benzene, the PRG is 0.23 ug/m3 and the detection limits ranged from 4 to 11 ug/m3. U.S. EPA Method TO-14A is capable of reaching sub ug/m3 detection limits for these compounds. The elevated detection limits result in an uncertainty that may indicate that workers and visitors to the site, including workers at the University of California at San Francisco (UCSF) complex may be exposed to these compounds in ambient air at concentrations above health screening criteria. While detection limits are not a significant issue for subsurface probes, since there is attenuation between the vadose zone and the breathing zone, all future ambient air samples should attain the lowest practicable detection limit for these compounds achievable by the laboratory. Please revise the report to indicate that any additional ambient air samples will use the lowest practicable detection limit or show why the current detection limits are the best results that can be obtained.**

Response: The contract laboratory-reported data for the compounds identified in the above comment are at the lowest practicable detection limits based on the applied methodology, the broad list of target compounds established for the investigation, the nature of the samples, and the established data quality objectives (DQO) for the investigation. The DQOs established for this investigation were not designed to achieve detection limits below preliminary remediation goals (PRG) for screening or compliance. DQOs were established to characterize and delineate the migration of landfill gas.

The contract laboratory analyzed field samples using a water management technique, a cryogenic trap, and a mass spectrometer detector in full scan mode. Since elements from Methods Toxic Organics (TO) 14A and TO-15 were incorporated in the analysis, it could be considered either a modified Method TO-14A or a modified Method TO-15. Using these parameters, laboratory method detection limits (MDL) for vinyl chloride, benzene, tetrachloroethene, carbon tetrachloride, and trichloroethene (TCE) exceeded associated PRGs. For example, the contract laboratory MDL for benzene was 0.34 parts per billion by volume (ppbv), which converts to 1.1 micrograms per cubic meter ($\mu g/m^3$), assuming standard temperature and pressure are above the PRG of 0.23 $\mu g/m^3$. Using Method TO-14A does not necessarily provide detection limits below PRGs, which are not based on the sensitivity of routinely applied, approved analytical methodology. Even if modifications to improve instrument sensitivity are made to the analytical procedure (such as using an ion trap detector or operating the mass spectrometer in selected ion monitoring [SIM] mode), detection limits below PRGs still may not be achieved. The PRG for TCE (0.017 $\mu g/m^3$ or 0.003 ppbv) most likely cannot be achieved with any configuration of Method TO-14A. For example, when EPA analyzed quality assurance split samples from this site, their nominal practical quantitation limit for TCE was reported at 5.53 $\mu g/m^3$ or 1 ppbv, which is higher than the PRG of 0.017 $\mu g/m^3$.

Additionally, while it is true that existing data cannot be used to assess whether workers or visitors are exposed to these compounds at concentrations above the PRGs, actual concentrations that present a human health risk may be different. For example, the permissible exposure limit for TCE from the Occupational Safety and Health Administration is several orders of magnitude higher than the PRG.

For future sampling events, the Navy will use a SIM analysis on ambient or indoor air samples to increase sensitivity and lower detection limits if the analysis is being conducted for only a few analytes; this technique is not applicable to a broad scan for many analytes.

The Navy revised Section 3.1 of the final report to include a list of analytes with detection limits above PRGs.

Specific Comments

1. **Comment:** **Section 2.1, Ambient Air Surveys, Page 5: The text in the first bullet indicates that ambient air surveys were conducted along "the entire perimeter of the landfill," but Figure 11 indicates that this survey was only conducted along the perimeter of the landfill cap. Waste extends beyond the landfill cap so a survey along the entire perimeter would normally be conducted at the maximum extent of waste. Please revise the text of the first bullet to state that the survey was done along the perimeter of the landfill cap.**

   Response: The Navy revised Section 2.1 of the final report to state that the survey was performed along the perimeter of the landfill cap.

2. **Comment:** **Section 3.1, Ambient Air Surveys, Page 11: The last sentence of the fourth paragraph states "only 1,3,5-trimethylbenzene, benzene, chloromethane, and TCE were detected at concentrations above their respective PRGs, (Table 4)" at the light pole, but as noted in the general comment, the detection limits of several other compounds were elevated above the PRGs, so there is uncertainty about whether these compounds are present. Similarly, in the last sentence of the fifth paragraph, a similar statement is made about the detection of volatile organic compounds (VOCs) in the crawlspace of Building 830. Please revise the text to include the fact that detection limits were one to two orders of magnitude above the PRGs and discuss the potential that these compounds are present at levels above their PRGs but were not detected.**

   Response: Please see the response to EPA general comment 1 in relation to the compounds with elevated detection limits. The Navy revised Section 3.1 of the report to include the following paragraph:

   "The laboratory achieved the lowest practicable detection limits for ambient air samples given the applied methodology, the broad list of target compounds established for the investigation, and the nature of the samples; however, several nonmethane [volatile organic compounds] VOCs still had detection limits above PRGs (Table 4)."

3. **Comment:** **Figures 4 through 9: It is unclear why solid lines were used to delineate the extent of lithologic units in areas where there is no data. It is standard industry practice to use dashed lines. For example, on Figure 7 the southern extent of waste is an abrupt vertical line, but the nearest borings are about 105 and 110 feet away and there are no test pits in this vicinity. Please revise the cross sections to use dashed lines where there is no lithologic data.**

Response: The Navy revised Figure 4 of the final report to use dashed lines to represent the southern extent of waste. However, solid lines will continue to be used on the cross sections to identify where lithologic, visual, or documented data were used to establish the extent of units.

4. **Comment:** **Figure 4, Cross Section A-A': According to the boring log, the bottom 4 feet of the screened interval of IR01MW03A is poorly graded sand, but Figure 4 indicates that the poorly graded sand is below the screened interval. Please resolve this discrepancy.**

Response: The Navy revised Figure 4 of the final report as requested. The length of the screen interval for well IR01MW03A was increased to be consistent with the boring log.

5. **Comment:** **Figure 4, Cross Section A-A': The log for boring SG01B indicates that the interval between 10.5 and 20 feet below ground surface (ft bgs) is clay with 10 per cent sand and occasional gravel, but the lithology on the cross-section is sand. Please resolve this discrepancy.**

Response: The Navy revised Figure 4 of the final report as requested. The interval between 10.5 to 20 feet below ground surface (bgs) for boring SG01B was revised to indicate the lithology is clay.

6. **Comment:** **Figure 4, Cross Section A-A' and Figure 10, Cross Section D-D': According to the boring log, the sand just above the screened interval of IR01MW02B is a black sand with wood. This may be sand blast grit, which is a waste rather than the non-waste sand symbol used on the log. It appears that this would correspond more closely with the depth waste was observed in adjacent boring IR01B001. Please revise the cross-section to indicate that waste extends to the depth of the top of the screen in the vicinity of IR01MW02B.**

Response: Because trace wire was present in the depth interval of 19.5 to 27 feet bgs on well log IR01MW02B and trace cloth debris was present in the depth interval of 23 to 27 feet bgs on well log IR01MW03A, these intervals were designated as waste on Figures 4 and 7; see boring logs in Appendix B.

7. **Comment:** **Figure 5, Cross Section B-B' and Figure 12, Cross Section F-F': The log for IR01MW38A indicates that the lithology in the bottom two feet of the well screen is a black fat clay with traces of aluminum. The presence of aluminum suggests that this is fill, not native materials. Please resolve this discrepancy.**

Response: The Navy revised Figures 5 and 9 of the final report as requested. The 18-to-20-foot bgs depth interval on boring log IR01MW38A is now designated as waste.

8. **Comment:** **Figure 5, Cross Section B-B': The thickness of poorly graded sand in IR01MW18A is only 10 feet on the boring log, but is shown as about 14 feet on Figure 8 (Figure 5??). The thickness of this unit is correct on Figure 11 (Figure 8??). Please resolve this discrepancy.**

Response: The Navy revised Figure 5 of the final report to show the thickness of poorly graded sand is 10 feet as depicted on well log IR01MW18A.

9. **Comment:** **Figure 5, Cross Section B-B': It is unclear how it was determined that waste ends just beyond TPBWE14 and does not extend beneath the bay. Please explain how the limit of waste was determined since the waste found in boring TPBWE14 extends from 9.5 to 15.5 feet below the ground surface.**

Response: The Navy identified the southern extent of waste on Figure 8 by extrapolating the rapid decrease in waste thickness toward San Francisco Bay (Bay), as shown on boring log TPBWE14, compared with the thicker sequence shown on boring log IR01B039. Available data indicate that waste was not present beneath the Bay; results for test pit samples along the shoreline (WE15 and WE22) showed only undisturbed Bay Mud. Construction documents for the landfill show that no cofferdams were ever constructed to allow filling in the Bay at the southern edge of the landfill (Tetra Tech EM Inc. [Tetra Tech] In progress). These documents and historic aerial photographs show that a levee (with a road) was constructed across the southern edge of the landfill and that the enclosed area to the north was filled (Tetra Tech In progress).

10. **Comment:** **Figure 7, Cross Section B-B': The sand unit in SG04 (between 8 and 10 ft bgs) is only 2 feet thick according to the boring log, but this unit is shown as 5 feet thick on this cross section. Please resolve this discrepancy.**

Response: The Navy revised Figure 5 of the final report as requested. The sand unit is shown between 6 and 8 feet bgs, as per boring SG04.

11. **Comment:** **Figure 6, Cross Section C-C': The log of boring GMP13 and the portrayal of this boring on the cross section may be inconsistent. The log indicates that the interval between 3 and 6 feet bgs is "CLAY and gravel," but this unit is classified with the lithologic label sc on the log and drawn as sand on the cross section. The classification on the log**

and the depiction as sand appear to be incorrect. Please resolve these discrepancies.

Response: Boring log gas monitoring probe (GMP) 13 was incorrect. The Navy revised this log in the final report to be consistent with the lithology in the field log. Figure 6 of the draft report showed the correct lithology at GMP13; therefore, this figure was not revised.

12. Comment: **Figure 6, Cross Section C-C': The log for boring GMP18 indicates that clayey sand extends from 0 to 5 ft bgs, but the thickness of this unit on the cross-section appears to be at least 8 feet. Please resolve this discrepancy.**

Response: The Navy revised Figure 6 of the final report to be consistent with boring log GMP18.

13. Comment: **Figure 6, Cross Section C-C': There is little resemblance between the boring log for IR74MW01A and the depiction of the lithology in the vicinity of this boring on Cross Section C-C'. The cross section indicates that the lithology from 0 to 13 ft bgs is sand, then from 13-14.5 ft bgs, gravel, then below 14.5 feet, bedrock. The log for this boring indicates that sand only extends from the surface to 2.5 or 3 ft bgs, then gravel extends to 16 ft bgs, and bedrock is found below 16 ft bgs. Please revise the cross section to depict the correct lithology.**

Response: The Navy revised Figure 6 of the final report to be consistent with boring log IR74MW01A.

14. Comment: **Figure 8, Cross Section E-E': The log for IR01MW17B indicates that the sample from the unit labeled "gw-fill, concrete and brick" had a sheen, so it is unclear why this unit is not considered waste. The log also indicates that the material was black. Please explain why this unit is not considered waste or change the symbol to waste on the cross-section.**

Response: The purpose of the landfill delineation is to identify the physical extent of waste (specifically, a source area) and not the extent of downgradient impact. The interval of 19 to 29.5 feet bgs on boring log IR01MW17B is consistent with demolition debris fill. The sheen may be due to leachate from the overlying waste or may have migrated from oily waste disposed upgradient of the boring (the water table is generally near the top of the debris fill). Although the sheen indicates that groundwater may be affected by hydrocarbons, it does not indicate that this fill material is waste.

15. **Comment:** **Figure 8, Cross Section E-E': There is no correspondence between the log for SG03 and the lithology shown on the cross section in the vicinity of this boring. The log for SG03 indicates that the lithology from 0 to 2 ft bgs is clay, and the unit below this is sand to 16 ft bgs, but the lithology on the cross section indicates that sand extends from 0 to 4 ft bgs and clay extends from 4 to about 14 ft bgs. As drawn, the lithology indicates an abrupt change between this boring and IR01B015, which is only located a few feet east of SG03, so it appears that the wrong boring log was used when the cross section was constructed. Please correct the lithology on the cross section.**

Response: The boring log on Figure 8 is incorrectly labeled. The boring log shown on the figure should be SG23, not SG03. The Navy revised Figure 8 of the final report to indicate that the log shown is SG23. However, the lithology for the log was correctly shown on the figure in the report, so the lithology was not revised.

16. **Comment:** **Figure 9, Cross Section F-F': The boring log of SG21 and the lithologic label (sc) on the cross section indicate that the lithology between 6 and 8 feet bgs is clayey sand, but the cross section uses the color for clay in this depth interval. Please resolve this discrepancy.**

Response: The Navy revised Figure 9 of the final report to show the color of sand for the 6-to-8-foot depth interval of boring SG21.

17. **Comment:** **Appendix D, Section 1, Introduction, Page D-1: Please revise the introduction to Appendix D to clarify that the Tier 1 analysis was conducted using data only collected from the soil gas monitoring probes along Crisp Avenue (GMP13-GMP19) and the soil gas monitoring probes near Buildings 816 and 817 (SG01E and SG025C).**

Response: The Navy revised Section 1.0 of Appendix D to indicate that the vapor intrusion evaluation was conducted using data from GMP13 through GMP19 and SG01E and SG25C.

18. **Comment:** **Appendix D, Section 1, Introduction, Page D-1: Please revise the appendix to include a description of all the occupied structures within the UCSF complex. Specifically, please indicate if all of the occupied structures have crawlspaces, and if so, discuss whether the vapor in each of these crawlspaces was sampled and analyzed for volatile organic compounds (VOCs).**

Response: The Navy revised Section 1.0 of Appendix D to describe the University of California, San Francisco (UCSF) compound, including all structures located on the compound. However, please note that the purpose of Appendix D is to provide a screening-level evaluation of the indoor air exposure pathway along Crisp Avenue and Parcel A only. The Navy conducted this screening-level evaluation to address regulatory agency and community concerns about the potential for soil-gas associated with the Parcel E Industrial Landfill to migrate from the landfill to indoor air at Parcel A and affect human health. The Navy is currently conducting an evaluation of the indoor air pathway at the UCSF compound, and the results of that evaluation will be included in the landfill gas time-critical removal action (TCRA) closeout report (Tetra Tech In progress).

19. Comment: **Appendix D, Section 3.3, Tier-3--Site-Specific Pathway Assessment, Page D-6: After assessing the soil gas results from the soil gas monitoring probes installed on or north of Crisp Avenue in the Tier 1 analysis, the Tier 3 analysis was then conducted using VOC data from the crawlspace of Building 830. This analysis only considered the health impacts of TCE and 1,3-butadiene. Please clarify why soil gas data from the UCSF soil gas monitoring probes were not considered and why the only constituents of interest within the UCSF complex were the VOCs which failed the Tier 1 analysis north of the UCSF complex. Specifically, it is unclear why benzene and vinyl chloride were not considered in the analysis of the indoor air pathway in the UCSF complex.**

Response: The site-specific pathway assessment was conducted for 1,3-butadiene and TCE based on the results of question 4 in Tier 2, which indicated that generic concentrations exceeded the target soil-gas concentration (TSGC) by a factor greater than 50 for these two analytes only. Soil-gas data from sample points immediately adjacent to Building 830 and crawlspace air data from Building 830 were used in the evaluation to help establish a site-specific attenuation factor for these compounds. Since these compounds were not detected in the crawlspace air at Building 830, the Navy was unable to calculate a site-specific attenuation factor for these compounds. However, the data indicated that the subsurface vapor-to-indoor air pathway is incomplete for these compounds and does not pose an unacceptable risk to human health because these compounds were detected at high concentrations in the soil-gas adjacent to Building 830. Please see the response to EPA specific comment 18 on the evaluation of the indoor air exposure pathway at the UCSF compound.

Minor Comments

1. **Comment:** **Section 2.2, Soil Gas Survey, Page 7: The text in the two sentences in the second full paragraph on page 7 appear to present conflicting information. The first sentence states that "soil gas samples were collected at approximately 300 foot intervals along the southwestern boundary of the landfill," but the next sentence states that "access limitations did not permit sampling at this frequency along the southwestern boundary." Please resolve this discrepancy.**

   Response: The Navy revised Section 2.2 of the final report to state, "Soil-gas samples were planned to be collected at approximately 300-foot intervals along the southwestern boundary of the landfill."

2. **Comment:** **Figures 4 through 9: The deep borings have occasional horizontal tick marks, but it is unclear what these tick marks represent. For example, for IR01B025, there are tick marks at about 31 feet below mean sea level (msl) and -66 feet msl. In some areas, like the vicinity of IR01B001 and IR01MW03A, there are numerous tick marks within a few feet, but it is not clear that the tick marks have significance. Please define the tick marks in the legend or remove them.**

   Response: The tick marks represent facies changes in the boring logs (for example, a change from SP, poorly sorted sand, to SW, well-sorted sand, to CL, low-plasticity clay). The Navy revised the legends on Figures 4 through 9 of the final report to include a definition for the ticks.

RESPONSES TO DTSC COMMENTS

1. **Comment:** **Risk Assessment (Appendix D). The screening process used in the risk assessment (RA) is not acceptable. DTSC also has concerns about the data set for RA (e.g., elevated detection limits (DLs), qualified data, ambient data versus soil gas data). Consequently, cumulative risks may be under-represented. In lieu of the draft guidance approach of the United States Environmental Protection Agency (USEPA), DTSC prefers that a standard risk assessment be performed--for current and future unrestricted residential scenarios.**

   The general approach and the data set for RA should be discussed prior to conducting the RA. Please include all volatile organic compound (VOC) data. For non-detected results, ½ of the detection limit (DL) should be used. "J" and "J3" qualified data should be included. An Uncertainty Section should be provided. (This comment on the Navy's risk assessment approach was discussed with DTSC toxicologists Kimi Klein, Ph.D., and Cheng Liao, PH.D.)

Pending review of results of additional monitoring requested (see next comment), a risk assessment for the Crisp Avenue area may be moot.

Response: The evaluation presented follows the EPA draft subsurface vapor intrusion guidance (EPA 2002a), based on a request by EPA and DTSC to use the methodology in the EPA guidance. The methodology used for the evaluation is consistent with the methodology that would be used in a "standard risk assessment." To be conservative, the screening concentrations presented in Table 2 of the EPA guidance were not used to "screen out" chemicals; therefore, potential cancer risks and noncancer hazard quotients were estimated for all detected VOCs that are considered sufficiently volatile and toxic for the vapor intrusion exposure pathway. In addition, all J-qualified data were used in the evaluation. One-half of the detection limit for nondetected results was not used in the evaluation because 95 percent upper confidence limits were not calculated for use as exposure point concentrations (EPC). Instead, the maximum detected concentration was used as the EPC for each location assessed.

The Navy evaluated the detection limit for nondetected chemicals that are considered sufficiently volatile and toxic for subsurface vapor intrusion, and assessed the potential for risks to be underestimated for these chemicals. Detection limits for nondetected chemicals were compared with the risk-based soil-gas screening concentrations (using a target risk level of 1×10^{-6}), as presented in Table 2 of the EPA guidance, to assess whether detection limits exceeded risk-based screening concentrations for any of the nondetected chemicals. The Navy included the incremental cancer risk and/or noncancer hazard associated with one-half of the detection limit for nondetected chemicals with elevated detection limits (if any are identified) in the report.

2. Comment: **Additional gas monitoring probes (GMPs). To resolve the Department of Toxic Substances Control's (DTSC's) concerns about potential human health risks north of Crisp Avenue and to address the Integrated Waste Management Board's (IWMB's) concerns regarding the existing GMPs, additional GMPs should be installed north of Crisp Avenue. The new GMPs should be sampled for landfill gases and volatile organic compounds (VOCs), and analyzed by a laboratory certified by the State of California.**

In order to minimize future comments and disagreements, GMP locations and construction details should be approved by regulatory agencies prior to installation.

Response: The Navy is currently working with the California Integrated Waste Management Board (CIWMB) on the installation of new GMPs along Crisp Avenue. Before these GMPs are installed, the Navy will submit a work plan to the regulatory agencies for their review.

3. Comment: **Conclusions. Some concluding statements in the report are not fully supported by the data presented in the report or are in contradiction to the data presented in the report.**

For example, in reference to the Building 830 area on the UCSF compound (page D-6), the text says: "The COPCs [chemicals of potential concern] 1,3-butadiene and TCE [trichloroethene], while detected in soil gas, were not detected in crawlspace for Building 830. These data indicate that…the subsurface to vapor to indoor air pathway is incomplete and does not pose an unacceptable risk to human health." The statement about health risks is not warranted since: an RA was not performed; other COPCs that were detected in ambient air (e.g., tetrachloroethene (PCE)) and soil gas (e.g., acetone, propylene) were not considered; and high DLs and qualified data were not fully evaluated.

Another example, with respect to the Crisp Avenue area, VOCs above background were measured in the field measurements up to 750 ppbv at GMP19 on Crisp Avenue (Table 8) and non-methane VOCs have been measured at 261 ppbv at SG01E on Parcel A (Figure 15). Although not methane, these compounds are still arguably "landfill gases" since the landfill is the presumed source area. And, data points located at the extreme southern edge of Crisp Avenue necessarily represent a soil volume that extends some distance to the north into Crisp Avenue. Therefore, the following statements are not exactly correct: "Subsurface gas from the landfill has apparently not migrated to Parcel A" (page D-1); "…landfill gas has not migrated north beyond the extreme southern edge of Crisp Avenue…" (page D-9); and, "…it is extremely unlikely that landfill gas has ever migrated into or beyond Crisp Avenue." (page D-9).

The LFG control system installed by the Navy as an emergency removal action has alleviated some concerns about LFG migration. However, some statements about the LFG system are not fully supported since all relevant data has not been provided. For example, it is clear that the following quote is not exactly correct since the purpose of the gas control system (e.g., barrier wall and extraction wells) was to control gas migration onto only one specific area—the occupied portion of the University of California at San Francisco (UCSF) property: "The recently installed gas control system will effectively prevent gas migration from the landfill, ensuring that gas will not migrate off site in the future" (page D-1). Also, leakage of the barrier wall has recently been reported (BCT meeting: June 24, 2003) and has not been fully evaluated.

Response: The Navy revised Appendix D to state, "These data indicate the Tier 3 assessment shows that the subsurface vapor-to-indoor air pathway is incomplete for these two compounds."

The Navy does not agree that the presence of VOCs detected beneath Crisp Avenue indicate the landfill as the source. The strip of land along Crisp Avenue that is currently part of Parcel E was originally part of Parcel A. However, in reviewing the finding of suitability to transfer for Parcel A (Tetra Tech 2002b), this strip of land was removed from Parcel A because it was likely that various chemicals were spilled along the roadway and railroad. As a result, any VOCs detected along Crisp Avenue are likely from rail or roadway operations and not from the landfill.

Methane is the more appropriate indicator of landfill gas. Although methane was detected north of the barrier wall, as reported to the Base Realignment and Closure Cleanup Team (BCT), these detections were within the barrier trench. Methane levels were below the cleanup level established by the TCRA action memorandum (Tetra Tech 2002c) at all GMPs along the landfill and UCSF fence line.

The Navy revised Section 1.0 of Appendix D to state, "The Navy achieved the TCRA goal of reducing methane concentrations to 5 percent of the LEL."

4. Comment: Continued monitoring. DTSC has requested three rounds of laboratory sampling at GMPs along Crisp Avenue; however, only one sampling event is included in this report. As noted in previous comments from DTSC, monitoring will be required at GMPs installed along Crisp Avenue, on the University of California at San Francisco property, and on the western property boundary until the final remedy for the landfill has been approved in a Record of Decision (ROD).

Response: The Navy is designing a basewide groundwater monitoring program for the GMPs, and the sampling and analysis plan was submitted to the regulatory agencies (Tetra Tech 2003).

5. Comment: Groundwater as source. VOCs in groundwater may be a source for the VOCs detected in soil gas. And, conversely, VOCs in the vadose zone (in soil or soil gas) may be a source for VOCs in groundwater.

Groundwater data should be included and discussed in Appendix D, at least for the northern perimeter area. A figure with groundwater data should be included. The groundwater-to-air pathway should be included in the RA. For this purpose, groundwater samples should be collected from GMPs (including new GMPs north of Crisp Avenue) and analyzed for a full suite of compounds.

Response: Groundwater data are not included in Appendix D because collection of these data is outside the scope of this investigation. Groundwater sampling was not included as an agency-approved DQO in the field sampling plan and quality assurance project plan (FSP/QAPP) (Tetra Tech 2002a); therefore, the GMPs were not constructed for groundwater sampling. However, the Navy will collect additional groundwater data under the basewide groundwater monitoring program (Tetra Tech 2003).

Additionally, soil-gas data better indicate what is in soil-gas, rather than an estimate based on groundwater.

6. Comment: **Groundwater levels. Groundwater levels are factors to consider with respect to potential human health risks associated with VOCs in groundwater. Also, groundwater level measurements are needed to evaluate the effects of the barrier wall and gas extraction systems on local groundwater flow.**

Figure 10 shows generalized groundwater levels in Parcel E. However, localized ground water levels have not been measured: these can be easily obtained from GMPs. Please sample groundwater levels in GMPs including the temporary GMPs recently installed along the barrier and new GMPs requested. Groundwater levels in monitoring wells should be measured as well. Provide a figure showing results.

Response: Please see the response to DTSC comment 5.

7. Comment: **"The title "Landfill Gas Characterization" is not appropriate. The title is misleading since characterization of the landfill gas (LFG) within the landfill was not the subject of this report. The focus of the investigation was on the potential for migration of landfill gases, especially to the north to the occupied portion of the UCSF property. Please revise the report title.**

Although landfill gas has not been fully characterized, some data on LFG has been provided. That is, laboratory data was provided for three monitoring wells (MWs) interior to the landfill (IR01 MW 16A, IR01MW18A and IR01MWI-5) and one well (IR01MW366A) located outside the landfill (as delineated on Figure 13). GMP data collected at the landfill cap boundary was also included. A discussion and evaluation of the LFG data should be included in the text, and recommendations for future work provided, as appropriate. MW data should be compared to other results (SGs, GMPs). That is, are similar constituents found in the various data sets? How do concentrations and contaminants vary in time and in space? Are MW results representative? Are MW results comparable to GMP results?

Strong variations in concentrations have been observed. However, in general, there is not enough data (about one year maximum) to fully evaluate seasonal variations (or barometric or diurnal variations) in LFG concentrations. For example, on the landfill, acetone at MW18A varies from 3U to 2000 ug/m3, dichlorodifluoromethane (Freon 12) at MWI-5 varies from 21 J3 to 260 ug/m3, and 1,2,4-trimethylbenzene at MW16A varies from 160 to 680 ug/m3. And, in the crawlspace of Building 830, non-methane volatile organic compounds (NMOCs) vary from 13.7 to 6,200 ppmv (Table 4).

It is not appropriate to include LFG data collected from monitoring wells on Table 9 which is titled Gas Monitoring Probe Analytical Results. Please provide MW results on a separate table. Include a figure showing MW results."

Response: The title of the document was not revised. The investigation, and its subsequent title, was conducted in accordance with the agency-approved FSP/QAPP (Tetra Tech 2002a).

Variations in gas concentrations generally result from variations in microbial activity resulting from fluctuations in the moisture content within the unsaturated waste (such as the vadose zones' matrix potential). Variations in landfill gas migration flow patterns (and therefore in gas concentrations) can result from gas pressure differentials. Variations in gas partial pressures are the result of various causes, including drilling a new soil boring, a well cap being left open, fluctuations in the water level in the Bay, transmission of surface barometric changes to the vadose zone, and heat differentials from variations in bioactivity. While some seasonal variations are expected due to seasonal rainfall patterns, other changes in gas concentrations are more difficult to predict and rarely can be attributed to any specific cause.

The concentrations of nonmethane VOCs in the UCSF compound likely increased as a result of (1) the negative pressure used to induce removal of landfill gas, which increases volatilization of organic compounds, and (2) changes in the partial pressure of gas constituents when the relatively high volume of methane gas was removed. Most nonmethane VOC concentrations in the UCSF compound have decreased since the initial response to the removal action.

The Navy revised Sections 3.0 and 4.0 of the final report to discuss soil-gas monitoring data for methane and VOCs measured at groundwater monitoring wells. The Navy removed all groundwater monitoring well data from Table 9, which are now included as Table 11. In addition, the Navy added Figure 19, which shows methane results at the groundwater monitoring wells.

8. Comment: **Limit of landfill gases (Figure 14). It is noted that the scope of the emergency action (e.g. barrier wall and extraction wells) was focused on the occupied portion of UCSF property. Other areas have not been as fully investigated; so, the extent of LFG in other areas has not been as well defined, as indicated by the dashed lines on Figure 14. In particular, the western limit (i.e., on non-Navy property) has not been fully investigated.**

Response: Comment noted. However, only one area (the private property to the northwest of the landfill) was not adequately delineated because access to the property was denied. It is likely that if landfill gas migrated to that area, it would have been extracted as part of the removal action conducted at the adjacent UCSF compound (Tetra Tech In progress).

9. Comment: **Detection limits (DLs). For many volatile organic compounds (VOCs), detection limits are elevated. Elevated detection limits result in uncertainties in human health risk calculations. The lowest practicable detection limits should be obtained for future soil gas and ambient air monitoring. Detection limits should be lower than risk-based levels.**

In previous comments, DTSC had requested that method TO14A be used, since lower DLs are achievable with TO14A than with TO15. Please confirm that TO14A has been used and explain why lower detection limits have not been achieved.

DLs greater than relevant criteria should be discussed in the text (e.g.., in Section 3.1).

Response: Please see the response to EPA general comment 1.

10. Comment: **Quality assurance/quality control (QA/QC). The Quality Control Summary Report (Appendix C) concludes: "Data without qualifiers and data qualified as estimated with a (UJ) or (J) qualifier area usable for purposes in supporting project objectives" (page C-10). Does this mean that U ("non-detected") data and J3 data are not usable? Since a sizable percentage of data results were U or J3 qualified, the Navy's statement about data usability warrants further discussion.**

For example, 13% of VOC sampling results were qualified as estimated or estimated non-detect (J3/UJ3) because matrix spike (MS) recovery or surrogate recovery did not meet QC limits. Is this due to matrix effects (e.g., high propylene and acetone in GMPs 24 and 25 in the Building 830 area)?

QA/QC reports should be signed and dated by the QA/QC officer.

Response: The text in Appendix C identified in the comment is not completely clear, and could be misinterpreted. Data qualified with a "U" simply means that the parameter was not detected at the reported limit. Data qualified with a "J" indicates that the result is estimated, but usable for project purposes, including all data with a "J" qualifier (such as "J3," "J8," and so forth). Data with a "UJ" qualifier indicates that the parameter is "estimated, nondetected," meaning that either the detection limit has been raised or that the detection limit may be affected by the exceedance of a quality control criterion. Data qualified "UJ" are also usable data. Only data qualified as "R" (rejected) should not be used for project purposes.

VOC sampling results that were qualified J3/UJ3 due to matrix spike or surrogate recovery outside control limits were generally determined to be estimated but usable based on matrix interferences. Target compound (such as propylene) and nontarget hydrocarbon concentrations contributed to matrix spike and surrogate recovery problems.

11. Comment: **USEPA preliminary remedial goals (PRGs) for ambient air. DTSC and USEPA (letter: June 16, 2003) have noted that DLs for ambient air samples exceeded PRGs for ambient air. Resampling of ambient air to lower DLs is warranted, since the ambient air pathway is complete on the UCSF compound. This sampling should be accomplished as soon as possible.**

DTSC would like to see all exceedences of PRGs (in GMPs and SGs) displayed on figures, including DLs in exceedence of PRGs. DTSC understands that PRGs are not directly applicable to soil gas. Nonetheless, in lieu of posting all data on spider maps, screening (for posting purposes) of subsurface data against PRGs is requested.

Data exceeding ambient air criteria (including DLs) should be highlighted on Table 4.

Response: Please see the response to EPA general comment 1. The ambient air pathway at the UCSF compound is being evaluated as part of the landfill gas TCRA closeout report (Tetra Tech In progress).

PRGs are for ambient air concentrations and are not applicable to soil-gas. Therefore, the Navy did not revise Figure 15. However, the extraction system has removed methane and nonmethane VOCs at the UCSF compound. The fourth quarter sampling round was conducted in November 2002, after the extraction system was activated. Subsequent results for methane and nonmethane VOCs did not exceed the PRGs.

12. Comment: Ambient air results (Section 3.1).

Light pole results. 1,1,2,2-tetrachloroethane (PCA) was detected at the light pole but is not listed. Tetrachloroethene (PCE) should also be listed as detected. PCE should also be listed as greater than the PRG. Trichloroethene (TCE) is listed but TCE is not shown as detected on Table 4: please clarify.

Building 830 crawlspace. Tetrachloroethylene (PCE) and propylene should be listed as detected in Building 830 crawlspace. PCE should be listed as detected above the PRG. Trichloroethene (TCE), cyclohexane and carbon disulphide are listed as detected contaminants for the Building 830 crawlspace, but they are shown as non-detected (U and U2 qualified) on Table 4: please clarify.

Response: The Navy revised Section 3.1 of the final report as requested.

13. Comment: Gas monitoring probes (GMPs: page 9, Section 2.3.1: GMP 01 through GMP 12, GMP 20, and GMP 21). Please explain why GMP11A is noted as a replacement for GMP05A and GMP06A (which are 300 feet distant from GMP11A). Please explain why the GMPs had to be replaced. That is, expand the description of the emergency removal action: include active and passive components of the system (i.e., sand and gravel trench, Gund Curtain, extraction wells), and note that wells were destroyed during trenching.

Please include a figure showing the location of Gund Curtain and extraction wells. Since this report should be a stand-alone document, it would be most useful to include a figure (like Figure 4 in the Landfill Lateral Extent Evaluation report) with all pertinent site features.

New figure. Please include a figure with volatile organic compounds laboratory results for all GMPs. All exceedences of PRGs for ambient air should be shown, including elevated DLs.

Response: The Navy revised Section 2.3.1 of the final report to state, "Subsequently, GMP01 through GMP08 and GMP11 were removed during the installation of the landfill gas barrier wall system (Figure 14) in August 2002. Replacement GMPs (GMP01A through GMP08A and GMP11A) were installed during construction activities for the barrier wall and were completed in September 2002. Two GMPs, GMP05A and GMP06A, were damaged when the barrier wall was installed. These GMPs were subsequently replaced in November 2002 with GMP05B and GMP06B. Figure 13 shows all of the former and current GMP locations."

The Navy added Figure 14 to show the features of the gas control system, the location of the Gundwall, and the extraction wells. Gundwall rather than Gund Curtain was installed as part of the system.

The Navy did not include a figure showing VOC results for the GMPs. Such a figure would be cumbersome because of the numerous detections of VOCs at each location. In addition, Table 9 of the final report lists all VOC results. However, PRGs are not included in the table because they are not applicable to soil-gas results.

14. Comment: Cross sections. DTSC agrees with USEPA's comments on cross sections. DTSC may provide additional comments pending review of supporting documentation as requested in DTSC's comments on the Landfill Lateral Extent Evaluation.

Response: Please see the responses to EPA specific comments 3 through 16 regarding the cross section figures.

15. Comment: Appendix D: Evaluation of Vapor Intrusion Potential (Indoor Air Exposure Pathway) at Crisp Avenue and Parcel A

The text should include a description of the Johnson and Ettinger model (JEM), with an example calculation. Model inputs should be described in more detail and summarized on a table. For example, the Notes to Attachment D-1 are not sufficient. What are: Lf, Ts, ATc, ATnc, ED, EF?

Section 3.1 and Table D-1. Several compounds identified as COPCs (Question 1) are not included on Table D-1. These include: 1,4-dichlorobenzene, chlorodibromoethane, dichlorodifluoromethane, styrene, and xylenes. All compounds detected should be included on Table D-1 (not just compounds exceeding TSGCs). Include target soil gas concentrations (TSGCs) for all compounds.

Section 3.3. All data (soil gas and ambient air) should be evaluated in any RA for the Building 830 area, and included on tables. Why are the COPCs cited (i.e., TCE and 1,3-butadiene) at Building 830 not included on Tables D-1 and D-2 and Attachment D-1?

The Navy's rationale for discussing only 1,3-butadiene and TCE as COPCs for Building 830 is not clear. Why were other compounds not included in the RA? For example, acetone and propylene were measured in GMP24: acetone was measured at 3,100 ug/m3 (above the PRG of 370 ug/m3) and propylene at 4,900 ug/m3 (PRG is "NA": not available). And, in both GMP24 and GMP25, multiple compounds were "J3" qualified or were "non-detect" with DLs greater than PRGs (Table 9). Also, in nearby soil gas probes, non-methane VOCs were measured at up to 1580 ppbv (SG04A) and 1191 ppbv (SG05C) (Figure 15), which suggests that VOCs may be a concern.

Table D-2 and Figure D-2 are not in agreement as SG01 is shown on the figure and SG01E is shown on the table: please correct.

To be consistent with text, column 4 on Table D-1 should be titled: "TSGC, shallow soil". Using a different phrase ("Shallow Screening Limit") is confusing. A footnote on the table should indicate which dilution factor was used.

Error. Should dilution factors for soil gas-to-air be expressed at 10 (i.e., 10:1) and 100 (100:1), instead of .1 and .01 (page D-6)?

Attachment D-1. Please explain why risks were not available ("NA") for multiple compounds.

Response: The Navy included additional descriptions of the Johnson and Ettinger model and inputs to the model in Appendix D of the final report. In addition, footnotes were added to Attachment D1 to define all acronyms listed in the attachment.

Table D-1 of this appendix shows the results of the Tier 2 comparison between soil-gas results and TSGCs; therefore, this table was not revised. However, this table was incorrectly referenced in Section 3.1, which describes the Tier 1 level screening. As a result, the Navy removed the reference to Table D-1 in Section 3.1 of the final report.

Please see the response to EPA specific comment 18 for a detailed response concerning Section 3.3 and Building 830 analytes of potential concern.

The Navy revised Figure D-2 of the final report to be consistent with Table D-1.

The Navy revised Table D-1 as requested.

The attenuation factor in Appendix D is presented in accordance with EPA guidance (EPA 2002); therefore, no revision is necessary.

The potential health effects from exposure to some chemicals are limited to noncancer effects. For these chemicals, "not available" (NA) is shown in Attachment D1 for the "Risk (J-E)" result. Similarly, the potential health effects from exposure to other chemicals are limited to cancer effects. For these chemicals, "NA" is shown in Attachment D1 for the "Hazard Quotient" result. A few chemicals (isopropyl alcohol, 4-ethyltoluene, tetra-hydrofuran, propylene, 2-hexanone, cyclohexane, ethanol, and heptane) were shown in Attachment D1 with both a risk and hazard quotient result of NA. Through comparison with Table 1 from EPA guidance (EPA 2002), these chemicals are not considered sufficiently volatile and toxic for subsurface vapor intrusion evaluation. Results for these chemicals will be revised to show "NSVT" (not sufficiently volatile and toxic) rather than NA.

16. Comment: **Page 12, Section 3.3.1 Field Screening Results. The text says that field monitoring results collected after November 13, 2002 are not included in this document. Please include all data in the revised report.**

Response: Data collected after November 13, 2002, are not considered to be part of this investigation. These data will be presented in the landfill gas TCRA closeout report (Tetra Tech In progress). In addition, these data can be found on the Navy's website (http://www.efdsw.navfac.navy.mil/06/HPS_E).

17. Comment: **Figures. Please check building locations and names on figures and correct as needed. For example, on Figures 2, 10, 11, 16 and D-2: Is Building 816 mislabeled? Where is Building 818? And, on Figure 3: There are two buildings "817A".**

Response: The Navy reviewed these figures and made all appropriate necessary revisions.

18. Comment: **Figure 3, Cross-Section Location Map. The locations of GMP26 and GMP24 on this figure are different from their respective locations on other figures. Please correct.**

Response: The Navy revised Figure 3 of the final report to show the correct locations of GMP26 and GMP24.

19. Comment: **Figure 14. Include DLs.**

Response: The Navy revised Figure 14 of the final report to include a note that defines the range of detection limits for nondetected results. The detection limits ranged from 0.13 to 0.33 percent. Please see Table 7 for a complete list of all detection limits for nondetected results.

20. Comment: **Figure 16, Gas Monitoring Probe Quarterly Monitoring Results for Methane. Please include all GMPs on this figure.**

Response: Figure 16 is now Figure 18 in the final report; this figure was revised to show all GMPs.

21. Comment: **Figure D-1. Why are only SG01E, SG25E, GMP13 and GMP 19 shown? Also, please include groundwater wells north of the landfill. Please show the full extent of the UCSF property which extends to the Hunters Point boundary south of the fence. Change legend accordingly.**

Response: The Navy revised Figure D-1 of the final report to include all GMPs along Crisp Avenue. However, Appendix D is specific to the GMPs along Crisp Avenue and the two soil-gas sampling locations in Parcel A. Therefore, the figures were not revised to include the full extent of the UCSF compound.

22. Comment: Table 4. Field and trip blank results should be provided on the table.

Response: The Navy revised Table 4 of the final report to include field blank results.

23. Comment: Table 8. Please include results for duplicate samples.

Response: Table 8 presents the weekly gas monitoring field screening data. As such, no laboratory analytical results are available; therefore, no duplicate analytical samples are included in the table.

24. Comment: Table 5. Change field "conformation" to "confirmation"

Response: The Navy revised Table 5 of the final report as requested.

25. Comment: Table 13. "VOCs above Background" are presented. Please include the actual readings for each location along with the background readings. Discuss how background was measured. This table would be more useful to the reviewer if it was rearranged so that all results for a particular sampling point were grouped together.

Response: Table 13 does not exist. The Navy assumes that this comment is related to Table 8. As a result, the Navy revised Table 8 of the final report to include background readings; however, the table was not rearranged according to sampling location.

26. Comment: Section 2.1, first bullet. Change "landfill" to "landfill cap".

Response: The Navy revised Section 2.1 of the final report as requested.

27. Comment: Propylene, et al. The maximum concentration of propylene (26,000 ug/m3 at GMP23) was measured north of the barrier wall on UCSF property, and at nearby locations at 4,900 ug/m3 (GMP24) and 1,200 ug/m3 (GMP22). Propylene has also been measured south of the barrier wall: concentrations near 3,000 ug/m3 are not uncommon (e.g., 3700 ug/m3 at MW16A). However, since the maximum concentration is located north of the barrier wall, a source for propylene north of the barrier wall may be indicated.

The propylene results may indicate that additional investigation is warranted. Propylene is not a "typical" landfill gas, and is also not a "typical" contaminant at Hunters Point Shipyard. At standard temperatures and pressures, propylene is a gas, so it is usually purchased in cylinders. Its primary use is as a feedstock for manufacture of polypropylene and other chemicals (e.g., cumene): sometimes it is used in welding (instead of acetylene).

For several other compounds, maximum concentrations were measured north of the barrier on UCSF property. These include (in ug/m3): acetone (5100 at GMP23), carbon disulfide (1000 J3 at GMP23), chloromethane (800J3 at GMP23), ethanol (9900 at GMP04A).

Response: While propylene is used industrially as feedstock for the manufacture of chemical products and as a fuel source, propylene also is a common gas. It can be produced naturally by vegetation and combustion of organic matter or petroleum fuels (for example, it is found in cigarette smoke). It is also produced during reductive dehalogenation of 1,2-dichloropropane. It is very likely that propylene is a byproduct of the degradation of other compounds within the landfill. It may also be associated with residual fuel-related material that was disposed of in the landfill. A review of detected compounds in landfill gas shows many fuel- and solvent-derived constituents. As a result, the detection of this compound does not justify a new investigation.

The other compounds listed in the comment (such as acetone, carbon disulfide, chloromethane, and ethanol) are common degradation products found in landfill gas (CIWMB 1987). These gases tend to be lighter than many of the other trace nonmethane VOCs, and are near the end of the degradation cycle of many organic complexes. Therefore, these compounds can be expected to be at the farthest extent (that is, the leading edge) of the gas migration plume, which is consistent with modeling results that indicate gas migrates north at the site.

28. Comment: **Concentrations at the wall. For other compounds, maximum concentrations in the landfill area have been measured directly south of the wall. These concentrations were reduced after installation of the passive vents and barrier wall. However, the fact that highest concentrations were measured directly south of the wall indicate that continued monitoring (using laboratory analysis) at the wall is necessary so that gas concentrations and gas flow patterns near the wall (and potentially through the wall) can be assessed. Maximum concentrations measured directly south of the wall include (in ug/m3): 1,2,4-trimethylbenzene (17000 ug/m3 at GMP08); 1,2-dichloro-1,1,2,2-tetrachloroethane (Freon 114: 1500 in GMP04); 1,3,5-trimethylbenzene (9000 at GMP08); 1,4-dichlorobenzene (920 J3 in**

GMP12); 4-ethytoluene (2500 J3 in GMP08); cis-1,2-dichloroethene (68 in GMP05), dichlorodifluoromethane (4200 J3 in GMP01); hexane (15000 in GMP08); o-xylene (970 J3 in GMP08); and vinyl chloride (220 in GMP05).

Response: Please see the response to DTSC comment 16.

29. Comment: **Field measurements. Field measurements of methane at greater than 1% by volume or of total volatile organic compounds (VOCs) at 5 ppm or greater in temporary soil gas probes (SGs) were triggers for collection of samples for laboratory analysis (Table 5). However, it is not clear that these are fully adequate trigger levels, based on a comparison of field results (Table 5) with laboratory results (Table 7).**

For example, VOC lab results were greater than field trigger levels (lab result/field result) in SG01 (6.9/0), SG02E (4.8/1.2), SG03A (5.1/1.5), and SG25D (7.2/1.5): the VOC field trigger was not sufficient to capture these elevated concentrations. (Analysis was performed on these samples for other reasons). While the field and lab results are not measuring exactly the same compounds or are not quantified in the same fashion, the comparison is nonetheless useful. Similarly, methane in laboratory results was greater than about twice the field measurements at SG01C (37/15), SG04 (32/16), and SG08 (65/10). These discrepancies are analogous to false negatives and suggest that the trigger levels are not conservative.

The large variations in concentrations (comment 1 above) also suggest that 5 ppm is not appropriate criteria.

Also, it is noted that 5 ppm as measured in the field is not an adequate indicator of potential risks. Chemical-specific results are required for risk assessment since risk-based levels for many compounds are less than 5 ppm.

Response: The Navy collected field measurements in accordance with the DQOs established in the agency-approved FSP/QAPP (Tetra Tech 2002a). However, the Navy will work with the BCT to establish appropriate sampling methods in subsequent investigations. Lastly, these samples were collected only to characterize landfill gas at the site and were not intended for use in a full risk assessment.

Nonmethane VOC analytical results did not correspond with recorded field screening measurements. More nonmethane VOCs were detected during field screening than were analyzed for using EPA Method TO-14A. In addition, the photoionization detector used during field screening was calibrated using isobutylene gas; therefore, compounds other than the calibration gas are not detected with the same precision.

Methane analytical results correlated well with the field results. A few exceptions were noted, but these occurrences were in areas of high methane concentrations and at locations directly above the water table, indicating that moisture content may have accounted for the difference in field and laboratory concentrations. The discrepancies between the field and laboratory methane results do not indicate that the field screening trigger is not conservative. The laboratory results confirm that all field screening results were below 5 percent of the lower explosive limit, as shown in the table below.

Location	Depth (feet bgs)	Field Methane (%)	Laboratory Methane (%) (EPA Method 3C)
SG01E	13.5	0.0	ND
SG02B	7.0	0.0	ND
SG02C	5.0	0.5	ND
SG02C	13.5	2.4	1.58
SG02G	4.5	0.0	ND
SG02G	14.5	0.0	ND
SG03C	13.5	3.2	3.36
SG03D	7.0	0.0	ND
SG03D	13.5	0.0	ND
SG07A	5.0	3.9	3.7
dSG07A	10.0	0.9	0.21 J
SG11	8.0	0.0	ND
SG12	10.0	0.0	ND
SG15	4.5	0.4	0.42
SG21A	6.5	0.2	0.3
SG24	3.5	0.2	ND
SG25C	3.3	0.0	ND
SG25D	3.5	0.1	ND
SG25D	12.0	0.2	ND
SG27A	6.0	0.1	ND

30. Comment: **Risks. The various risks associated with landfill gas should be explicitly discussed with respect to the data collected. These include: explosion, toxicity, asphyxiation, and fire.**

With respect to toxicity, PRGs for ambient air are not the only criteria that should be considered—especially for compounds for which PRGs are not available. Please include, for example, ATSDR's minimum risk levels (MRLs). MRLs are located on the worldwide web at http://www.atsdr.cdc.gov/mrls.html#bookmark02.

With respect to fire and explosion, has it been determined that methane the only cause for concern? The data should be screened against ½ the lower explosive limit (LEL) for all compounds detected (e.g., propylene at 26,000 ug/m3 in GMP23).

To aid in these evaluations, and for the convenience of the reviewer, results and criteria (e.g., PRGs, LELs, MRLs) should be provided in both ug/m3 and in ppm.

Response: The Navy believes that comparing ambient air results with PRGs is appropriate for all compounds for which a PRG is available. The Navy reviewed the Agency for Toxic Substances and Disease Registry's minimum health risk levels (MRL) as potential criteria for those compounds with no available PRG (EPA 2002b). However, for nine compounds (1,1,2-trichloro-1,2,2-trifluoroehtane; 1,2-dichloro-1,1,2,2-tetrafluoroehtane; 2-hexanone; 4-ethyltoluene; 4-methyl-2-pentanone; ethanol; heptane; isopropyl alcohol; and propylene), no MRL is available. Therefore, MRLs were not used as screening criteria for ambient air analytical results.

With respect to fire and explosion, Section 20919.5 of Title 27 of the *California Code of Regulations* (Explosive Gases Control) states that

"Owners or operators of all MSWLF units must ensure that:

(1) The concentration of methane gas generated by the facility does not exceed 25 percent of the lower explosive limit for methane in facility structures (excluding gas control or recovery system components); and

(2) The concentration of methane gas does not exceed the lower explosive limit for methane at the facility property boundary."

According to this guidance, only methane gas needs to be compared with the LEL, and other compounds do not need to be compared with LELs.

31. Comment: **Indoor air. With one exception (Building 830), indoor air was not evaluated. For Building 830, the ambient air survey for methane only (using field instruments) included the hallway and back room (Table 3) and crawlspace data was collected for laboratory analysis for methane and VOCs (Table 4). The Navy has not demonstrated that this level of surveillance is fully adequate: other building details should be evaluated.**

For example, the Agency for Toxic Substances and Disease Registry's (ATSDR's) guidance (http://www.atsdr.cdc.gov/HAC/landfill/html/ch2a.html#7) suggests other areas for evaluation in the following quote.

"Foundation cracks and gaps, pressure differences between the inside and outside of the building or home, mechanical ventilation systems, and leakage areas (e.g., utility entry points, construction joints, or floor drain systems) provide entry points for gases."

Since soil gas concentrations exceed PRGs at multiple locations, careful consideration of all potential gas entry locations is indicated. It is incumbent on the Navy to demonstrate that each building and structure in the area has been adequately evaluated with respect to ATSDR guidance. If such an evaluation has already been accomplished, results of such an evaluation should be summarized on a table. Some details are provided on Table 3 but it is still not clear whether all possible gas entry points have been evaluated.

Response: Due to the sensitive nature of the research, UCSF could not provide the Navy access into buildings on the UCSF compound except for the hallway, backroom, and crawlspace of Building 830. UCSF staff indicated that the positive pressure in Building 830 was controlled for research purposes. Therefore, ambient gas entering Building 830 through foundation cracks and gaps and other leakage points is not a concern. Other structures on the UCSF compound include a storage building, storage sheds and bins, and animal kennels. The Navy also monitored known utility trenches in the compound during ambient air surveys.

32. Comment: **Data discrepancies. Please explain why methane results analyzed by EPA method 25C do not agree with results by EPA method 3C. For example, on Table 4, results for methane in the crawlspace of Building 830 for 6/5/2002 are 23 % by 25C and undetected at .16 % by 3C. Methane results for 8/1/2002 (4 % vs. .16U %) and 11/13/2002 (2 % vs .13U %) also do not agree. Similarly, results for the UCSF light pole on 8/1/2002 (30 % vs. .16U %) do not agree.**

Results for NMOCs do not agree with results for TO-14A (Table 4). For example, in the Building 830 crawlspace on 11/13/2002, NMOCs are 6,200 ppmv, but are generally undetected (except for acetone and xylenes) by TO-14A. Similarly, at the UCSF light pole on 11/13/2002, NMOCs are 5100 ppmv by 25C, but are generally undetected ("U" qualified) for specific VOCs in TO-14A.

In a time versus concentration comparison, NMOCs are increasing in both ambient air locations sampled. That is, in the three quarters sampled, NMOCs increase from 13.7 U on 4/3/2002 to 5,100 ppmv at the light pole and from .14 U to 6,200 ppmv in the crawlspace. What is the significance of this increase?

These discrepancies are large and warrant further investigation and evaluation. Large discrepancies, significant variation and increased concentrations of NMOCs all indicate that continued monitoring of the crawlspace and the light pole is required: time integrated samples may be appropriate.

Response: The large discrepancies noted between EPA Methods 3C and 25C were the result of a unit error. Analytical results for June 5, August 1, and November 13, 2002, were incorrectly reported in ppbv instead of parts per million by volume (ppmv). The methane results at the light pole and the Building 830 crawlspace for these three dates are actually 230, 300, 40, 1.2U, and 20 ppmv. Therefore, no significant differences exist between the methane results reported under EPA Methods 3C and 25C. The Navy revised Table 4 of the final report accordingly.

The nonmethane VOCs analyzed under EPA Method 25C were reported incorrectly as noted above. Although the nonmethane VOC and TO-14A results do not represent a significant difference, nonmethane VOC and TO-14 results for individual compounds should not be directly compared. Numerous compounds are included as nonmethane VOCs that would not be included using Method TO-14. Propane, butane, pentane, hundreds of other volatile petroleum hydrocarbons, and potentially hundreds of other VOCs might contribute to the nonmethane VOC results.

Given the reporting error for EPA Method 25C, no significant increasing trend exists for VOCs detected in the ambient air samples. In November 2002, an increase in nonmethane VOC concentrations occurred at the light pole and the Building 830 crawlspace; however, none of the Method TO-14 compounds were detected in these samples at concentrations above PRGs.

33. Comment: **Monitoring. Continued monitoring of GMPs (and landfill MWs) is indicated because: 1) seasonal variation has not determined; 2) conditions have changed due to the installation of the wall; 3) conditions vary depending on the operation of the extraction system; and 4) leakage across the barrier wall has been observed. Laboratory analysis is also required.**

Response: Please see the response to DTSC comment 16.

34. Comment: **The crawlspace at Building 830 is an oxygen deficient atmosphere (defined by Occupational Safety and Health Administration (OSHA) as less than 19.5 % oxygen). For example, on 8/1/2002 and 11/13/2002, oxygen was measured at 18 %. Please describe the health and safety precautions being utilized for sampling in this oxygen deficient confined space.**

Response: Based on field screening, the oxygen reading in the Building 830 crawlspace was 22.6 percent. As a result, the crawlspace is not considered to be an oxygen-deficient environment. Although the Navy has no plans to conduct more sampling in the crawlspace, if it becomes necessary, the Navy will implement the following actions:

- If oxygen readings show concentrations of 19.5 percent, the Navy will ventilate the space using the appropriate equipment typically used in storm and sanitary sewers, after which the space will be vented.
- If a gas sample is required from the confined space because of entry (such as any human body part displacing the plane of the space), the Navy will drop in the sampling equipment to avoid entering the space and collect readings or gas samples. The Navy will use an oxygen meter, a GEM, an organic vapor analyzer, and other appropriate monitoring equipment to ensure that the area where sampling is conducted is safe for humans.
- If oxygen-deficient spaces are encountered, appropriate UCSF contacts will be notified.

35. Comment: **GMP pressures. GMP pressures should be discussed in the text. Is the system functioning as anticipated with respect to gas flow? What is the conceptual model for gas flow? What are the observed effects of barometric pressure? Continued monitoring of pressures is required. "Relative pressure" in GMP (Table 8) should be defined in a footnote.**

Response: Landfill gas is generated as waste as the landfill decays, and any bioactivity that produces gas is generally increased by the infiltration of water and other related fluctuations in water levels. The high bioactivity also produces heat, increasing the pressure of the gas. The heated gas will migrate from areas of high pressure to low pressure. VOCs are easily volatilized because of the heat that is generated during this process. The VOCs will migrate with landfill gas as trace constituents. Concentrations of VOCs in landfill gas are limited by the amount of gas in the source area and their partial pressure in the total gas. Therefore, methane-rich landfill gas at Hunters Point Shipyard tends to rise and migrate to the northern area of the landfill, which is topographically high.

An active gas extraction system was used to remove landfill gas from the extraction wells within the UCSF compound. For the active system, a blower was used to create a vacuum at the wellhead, causing landfill gas near each extraction well to migrate to the well, where it was withdrawn by the vacuum. Significant reductions occurred in methane concentrations within a few days of applying the vacuum at each location. This reduction indicates that the remedial system worked as it was designed. During operation of the gas extraction system, attempts were made to measure the changes in gas pressure across the UCSF compound; however, the resultant measurements reflect the limited sensitivity of the gauges to measure at low pressures rather than the pressure differentials created by the extraction system. The pressure measurements provide little usable data to evaluate the system's performance.

Variations in barometric pressure will affect soil-gas pressure in the soil vadose zone; however, the variations are not within the sensitivity range of the gauges.

As shown by existing data, the gauges are not able to measure differentials in soil-gas pressures at the site.

The Navy revised the title of the "Relative Pressure in Gas Probe" column to "Pressure in Gas Probe" in Table 8.

36. Comment: Temporary soil gas probes (SGs). Please clarify whether SGs are still in place.

Response: Temporary soil-gas probes are not in place. After collection of the measurements and gas samples, the soil-gas borings were plugged with bentonite grout.

37. Comment: Decommissioning logs should be provided for all removed SGs, GMPs, and MWs. Construction details for all ground penetrations (SGs, MWs) that are used in this report should be included on Table 2: decommissioned locations should be identified on the table. Also, the well construction CD should be upgraded to include all new ground penetrations (e.g., SGs and MWs) and the revised CD provided.

Response: Plugging and abandonment logs will not be provided for GMPs or wells that have been decommissioned. Decommissioning logs are not required for Federal sites. The soil-gas borings were drilled using a direct-push sampling probe; no permanent screens or casings were installed. Table 6 of the final report lists the sample depths for each soil-gas boring. After collection of the measurements and gas samples, the soil-gas borings were plugged with bentonite grout. Because no permanent screens or casings were installed, no well installation logs or abandonment logs were prepared for these borings. Figure 12 shows the locations of all soil-gas borings, and Figure 13 shows the locations of GMPs and monitoring wells that were used in this investigation.

No well construction compact disc was provided with the report.

38. Comment: Tentatively identified compounds (TICs). TICs should be included.

Response: Tentatively identified compounds (TIC) were not specified in the DQOs listed in the FSP/QAPP (Tetra Tech 2002a). Therefore, the laboratory did not identify TICs when the samples were analyzed.

39. Comment: **Table 3 and Figure 12 should note that the % LEL cited applies to methane. Also the legend for Figure 12 should be rewritten. For example, "No LEL detected" doesn't make sense. Replace with "Not detected" and state the detection limit and the instruments used.**

Response: The Navy revised Table 3 and Figure 12 of the final report, as requested.

40. Comment: **Tables 4, 7, 9. What are non-methane organic compounds (NMOC) quantified as? Please provide a footnote.**

Response: The Navy revised Tables 4, 7, and 9 of the final report as requested. Additionally, NMOCs are now identified as nonmethane VOCs.

41. Comment: **Table 5 should indicate the calibration gas (methane?) for field results. Duplicate samples should be included. Footnotes should describe trigger levels for methane and VOCs. "NA" (for "not available") should be changed to "trigger levels not exceeded".**

Response: The calibration gases were isobutylene for the organic vapor analyzer; methane for the GT201; and carbon dioxide, methane, and oxygen for the GEM 2000. The Navy revised Table 5 of the final report to include the calibration gases for the equipment. This table does not present any analytical results; therefore, duplicate samples were not included in the table.

42. Comment: **Table 8. Please revise the table: group all results a single location together to facilitate review of "time versus concentration" comparisons. Time versus concentration graphs (at a small scale) would also be useful.**

Response: Table 8 is arranged by date to show the weekly field screening results and to be consistent with Tables 9 and 11. The Navy added Figure 17, Time Versus Concentration, to the final report.

43. Comment: **Table 10. Revise the table so that compounds are in alphabetical order. Please include analytical methods used on this table.**

Response: The Navy revised Table 10 of the final report, and footnote "a" to Table 10 provides the analytical method.

REFERENCES

California Integrated Waste Management Board. 1987. "Trace Organics Constituents in Landfill Gas." Prepared for the Department of Civil Engineering, University of California, Davis. November.

Tetra Tech EM Inc (Tetra Tech). 2002a. "Draft Final Field Sampling Plan/Quality Assurance Project Plan (FSP/QAPP) for Parcel E Nonstandard Data Gaps Investigation (Industrial Landfill and Wetlands Delineation), Hunters Point Shipyard, San Francisco, California." January.

Tetra Tech. 2002b. "Draft Finding of Suitability to Transfer for Parcel A (Revision 2), Hunters Point Shipyard, San Francisco, California." March 26.

Tetra Tech. 2002c. "Parcel E Landfill Gas Time-Critical Removal Action, Action Memorandum, Hunters Point Shipyard, San Francisco, California." September 23.

Tetra Tech. 2003. "Draft Sampling and Analysis Plan, (Field Sampling Plan and Quality Assurance Project Plan), Basewide Groundwater Monitoring Program, Hunters Point Shipyard, San Francisco, California." December.

Tetra Tech. In progress. "Internal Draft Landfill Gas Time-Critical Removal Action Closeout Report, Parcel E, Hunters Point Shipyard, San Francisco, California." September.

Tetra Tech. In progress. "Parcel E Nonstandard Data Gaps Investigation, Landfill Lateral Extent, Hunters Point Shipyard, San Francisco, California." September.

U.S. Environmental Protection Agency (EPA). 2002a. "Draft Guidance for Evaluation the Vapor Intrusion to Indoor Air Pathway from Groundwater and Soils." Region 9. San Francisco.

EPA. 2002b. "Preliminary Remediation Goals, Region 9." October. Available online at: http://www.epa.gov/Region9/waste/sfund/prg/index.htm