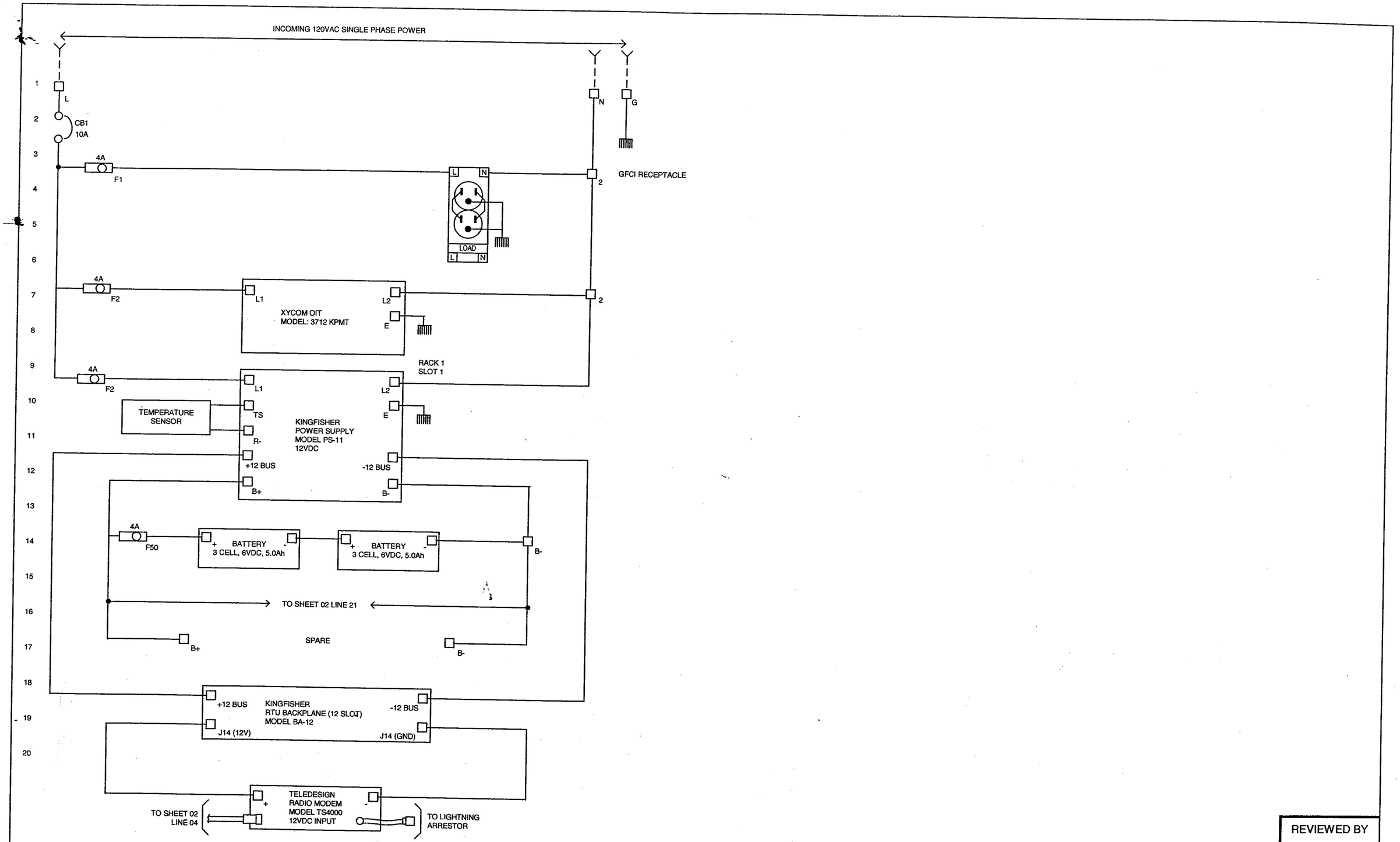

PLANT 19 CONTROL PANEL			
Customer	EPA for the city of San Bernardino		
Project	Muscoy Growndwater Site	JOB NUMBER	CSB24489

ATSI
Advanced Telemetry Systems International, Inc.
P.O.461659 Escondido, CA 92046-1659 760.738.6804

SCALE	DATE	REVISION	DESIGNED BY	DRAWN BY
N.S.	03-29-05	2	STAFF	M. SMITH

REVIEWED BY

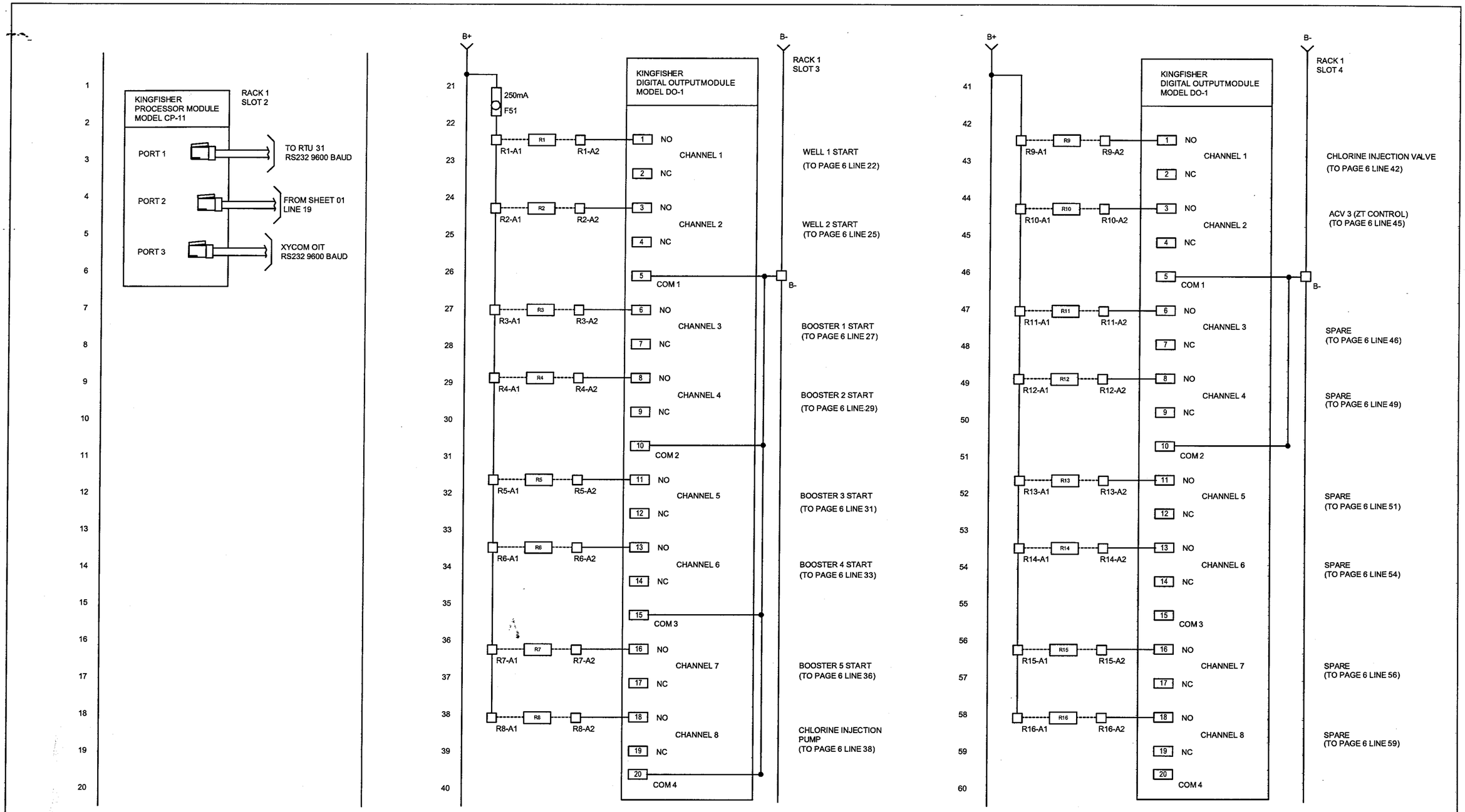

REVIEWED BY

PLANT 19 CONTROL PANEL				SCALE	DATE	REVISION	DESIGNED BY	DRAWN BY
Customer	EPA for the city of San Bernardino			N.S.	03-29-05	2	STAFF	M. SMITH
Project	Muscoy Growndwater Site	JOB NUMBER	CSB24489					

ATSI
Advanced Telemetry Systems International, Inc.
P.O.461659 Escondido, CA 92046-1659 760.738.6804

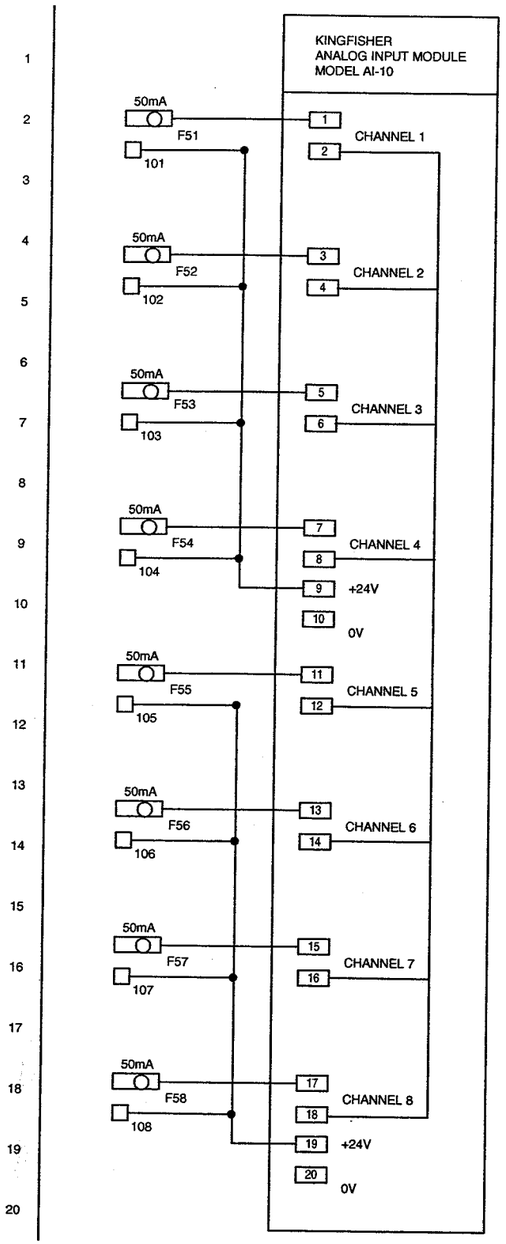

RACK 1
SLOT 5

RESERVOIR LEVEL

WELL 1 FLOWRATE

WELL 2 FLOWRATE

BOOSTER 1 & 2 COMBINED FLOW

BOOSTER 3 FLOWRATE

BOOSTER 4 FLOWRATE

BOOSTER 5 FLOWRATE

INF/EFF HEADER DIFF
PRES DPIT-01

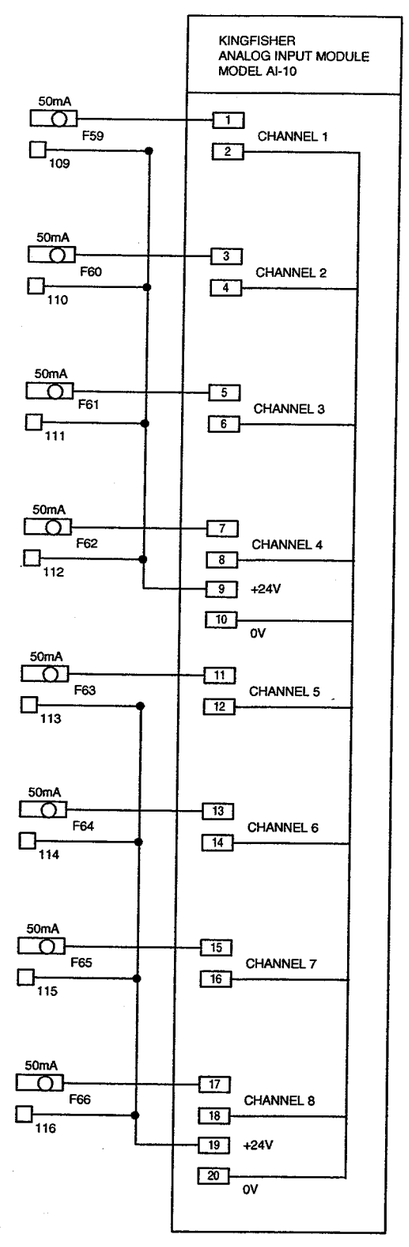

RACK 1
SLOT 6

EFFLUENT FLOWRATE
FIT-02

SPARE

EFFLUENT FLOWRATE
FIT-03

HGL 1246 FLOWRATE
FIT-04

HGL 1249 FLOWRATE
FIT-05

PRES SUSTAINING
VALVE POS ZT-03

FLOW VALVE POSISTION
ZT-04

FLOW VALVE POSISTION
ZT-05

REVIEWED BY

PLANT 19 CONTROL PANEL			
Customer	EPA for the city of San Bernardino		
Project	Muscoy Growndwater Site	JOB NUMBER	CSB24489

ATSI
Advanced Telemetry Systems International, Inc.
P.O.461659 Escondido, CA 92046-1659 760.738.6804

SCALE	DATE	REVISION	DESIGNED BY	DRAWN BY
N.S.	03-29-05	2	STAFF	M. SMITH

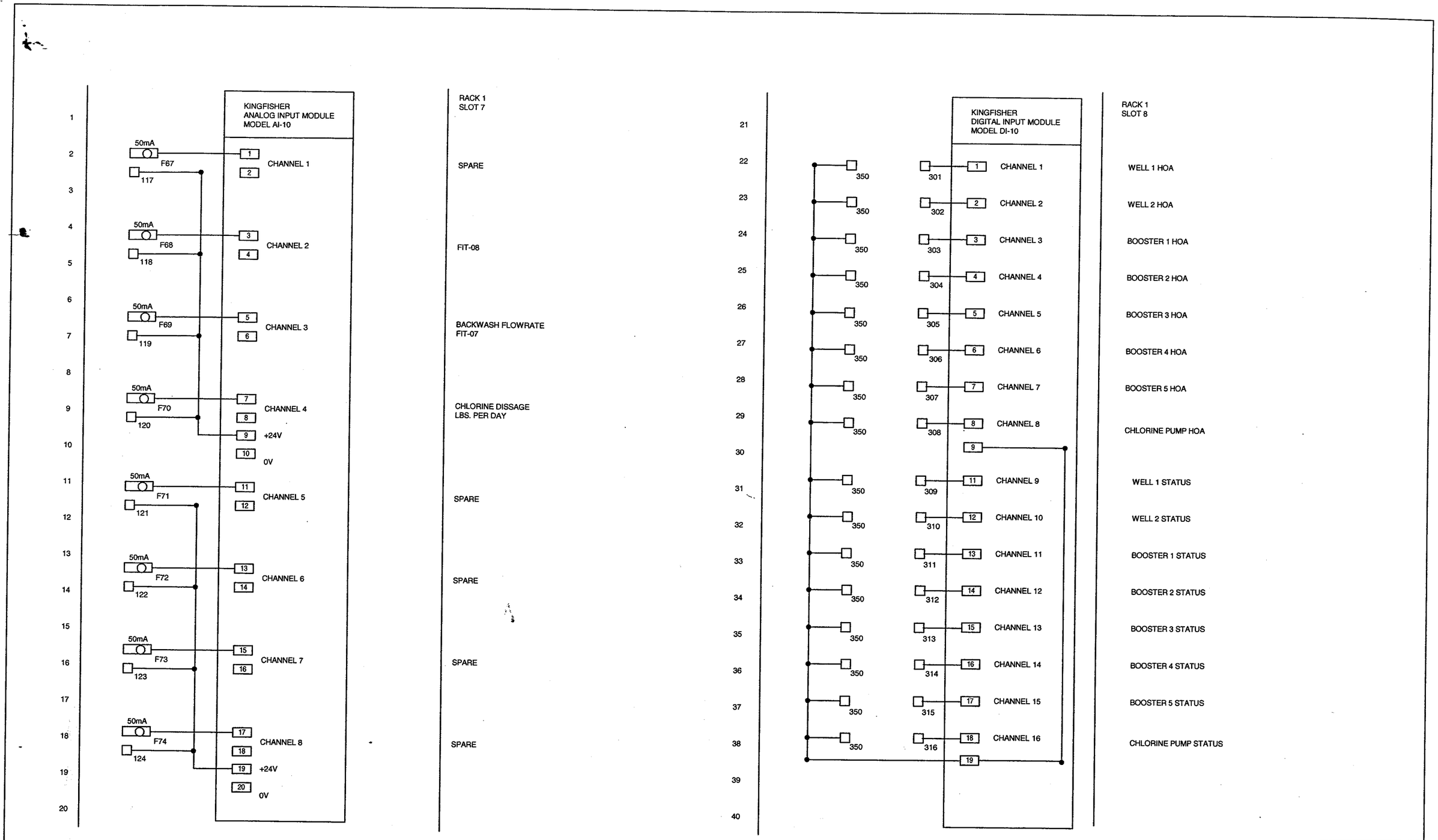

REVIEWED BY

PLANT 19 CONTROL PANEL			
Customer	EPA for the city of San Bernardino		
Project	Muscoy Growndwater Site	JOB NUMBER	CSB24489

ATSI
Advanced Telemetry Systems International, Inc.
P.O.461659 Escondido, CA 92046-1659 760.738.6804

SCALE	DATE	REVISION	DESIGNED BY	DRAWN BY
N.S.	03-29-05	2	STAFF	M. SMITH

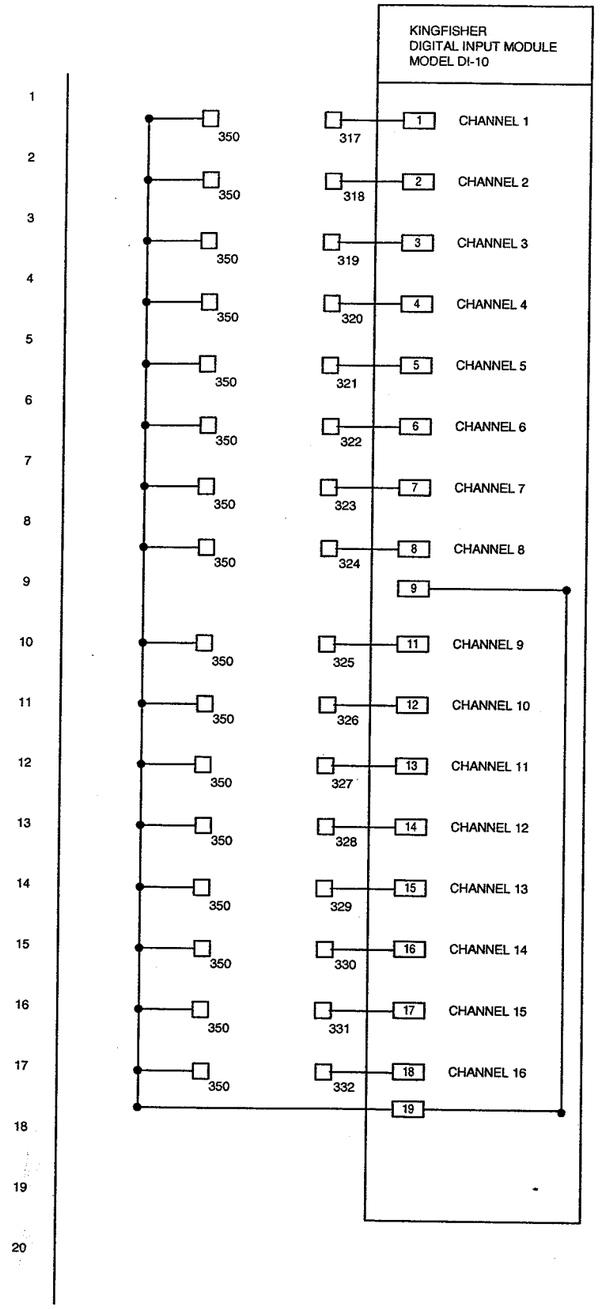

RACK 1
SLOT 9

21	FIT-02 TOTALIZER
22	FIT-03 TOTALIZER
23	FIT-04 TOTALIZER
24	FIT-05 TOTALIZER
25	FIT-06 TOTALIZER
26	EAST FLOW TOTALIZER
27	WEST FLOW TOTALIZER
28	SPARE
29	
30	AMBIENT CHLORINE 1
31	AMBIENT CHLORINE 2
32	SPARE
33	SPARE
34	SPARE
35	SPARE
36	SPARE
37	SPARE
38	
39	
40	

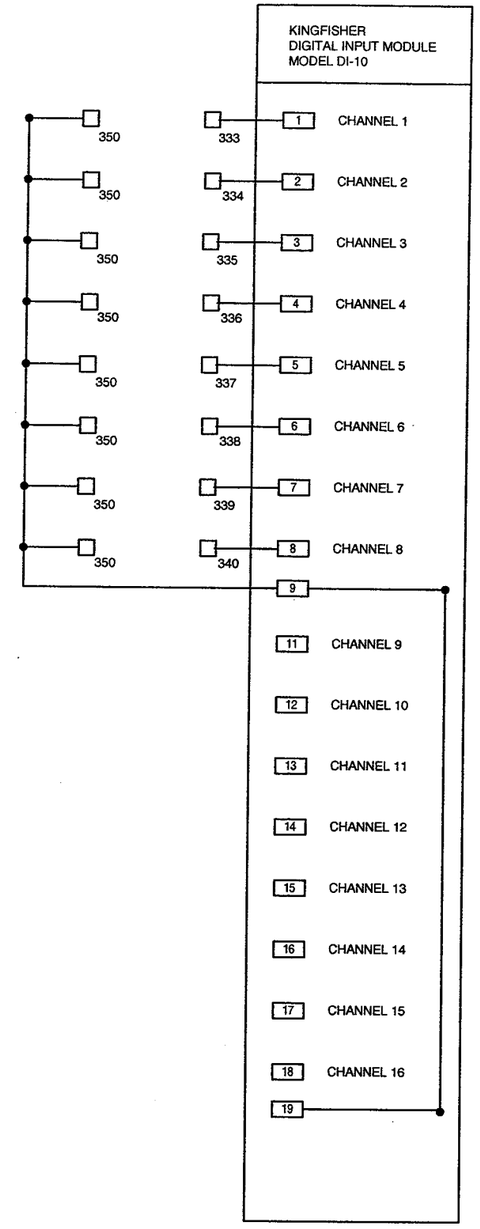

RACK 1
SLOT 10

1	WELL 1 FLOW TOTAL
2	WELL 2 FLOW TOTAL
3	BSTR 1&2 FLOW TOTAL
4	BOOSTER 3 FLOW TOTAL
5	BOOSTER 4 FLOW TOTAL
6	BOOSTER 5 FLOW TOTAL
7	BACKWASH FLOW TOTALIZER
8	SPARE
9	
10	
11	
12	
13	
14	
15	
16	
17	
18	
19	
20	

REVIEWED BY

PLANT 19 CONTROL PANEL

Customer	EPA for the city of San Bernardino		
Project	Muscoy Growndwater Site	JOB NUMBER	CSB24489

ATSI
Advanced Telemetry Systems International, Inc.
P.O.461659 Escondido, CA 92046-1659 760.738.6804

SCALE	DATE	REVISION	DESIGNED BY	DRAWN BY
N.S.	03-29-05	2	STAFF	M. SMITH

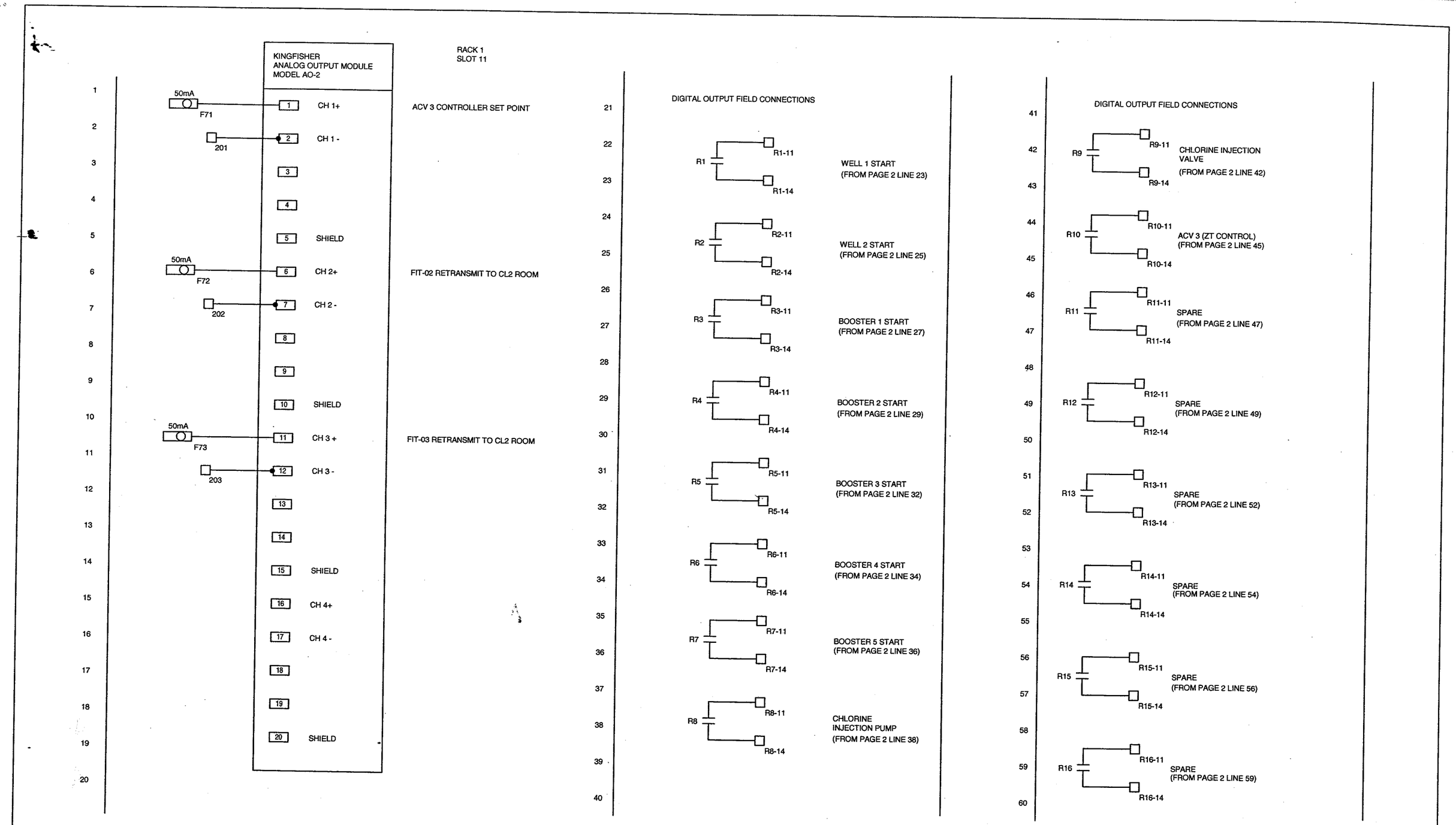

REVIEWED BY

PLANT 19 CONTROL PANEL			
Customer	EPA for the city of San Bernardino		
Project	Muscoy Growndwater Site	JOB NUMBER	CSB24489

ATSI
Advanced Telemetry Systems International, Inc.
P.O.461659 Escondido, CA 92046-1659 760.738.6804

SCALE	DATE	REVISION	DESIGNED BY	DRAWN BY
N.S.	03-29-05	2	STAFF	M. SMITH

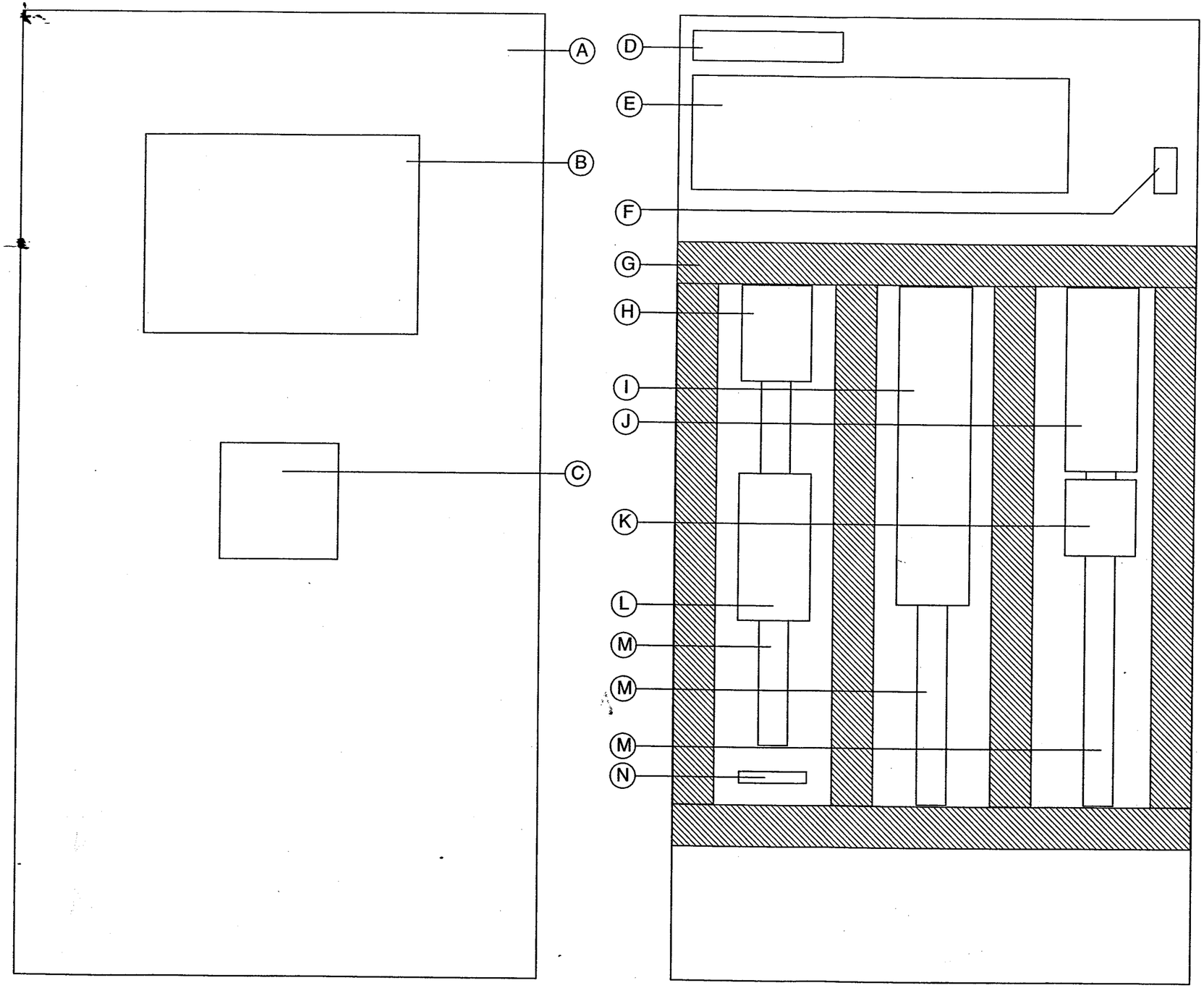

LEGEND	
A	CABINET DOOR
B	OIT
C	ACV-03 VALVE CONTROLLER
D	BACKUP BATTERIES
E	RTU
F	RADIO
G	PANDUIT
H	AC/DC INPUTS
I	DIGITAL INPUTS
J	ANALOG INPUTS
K	ANALOG OUTPUTS
L	DIGITAL OUTPUTS
M	DINRAIL
N	GROUND BAR

REVIEWED BY

PLANT 19 CONTROL PANEL			
Customer	EPA for the city of San Bernardino		
Project	Muscoy Groundwater Site	JOB NUMBER	CSB24489

ATSI
Advanced Telemetry Systems International, Inc.
P.O.461659 Escondido, CA 92046-1659 760.738.6804

SCALE	DATE	REVISION	DESIGNED BY	DRAWN BY
N.S.	03-29-05	2	STAFF	M. SMITH