Appendix A

Treatment System Process and Instrumentation Diagrams

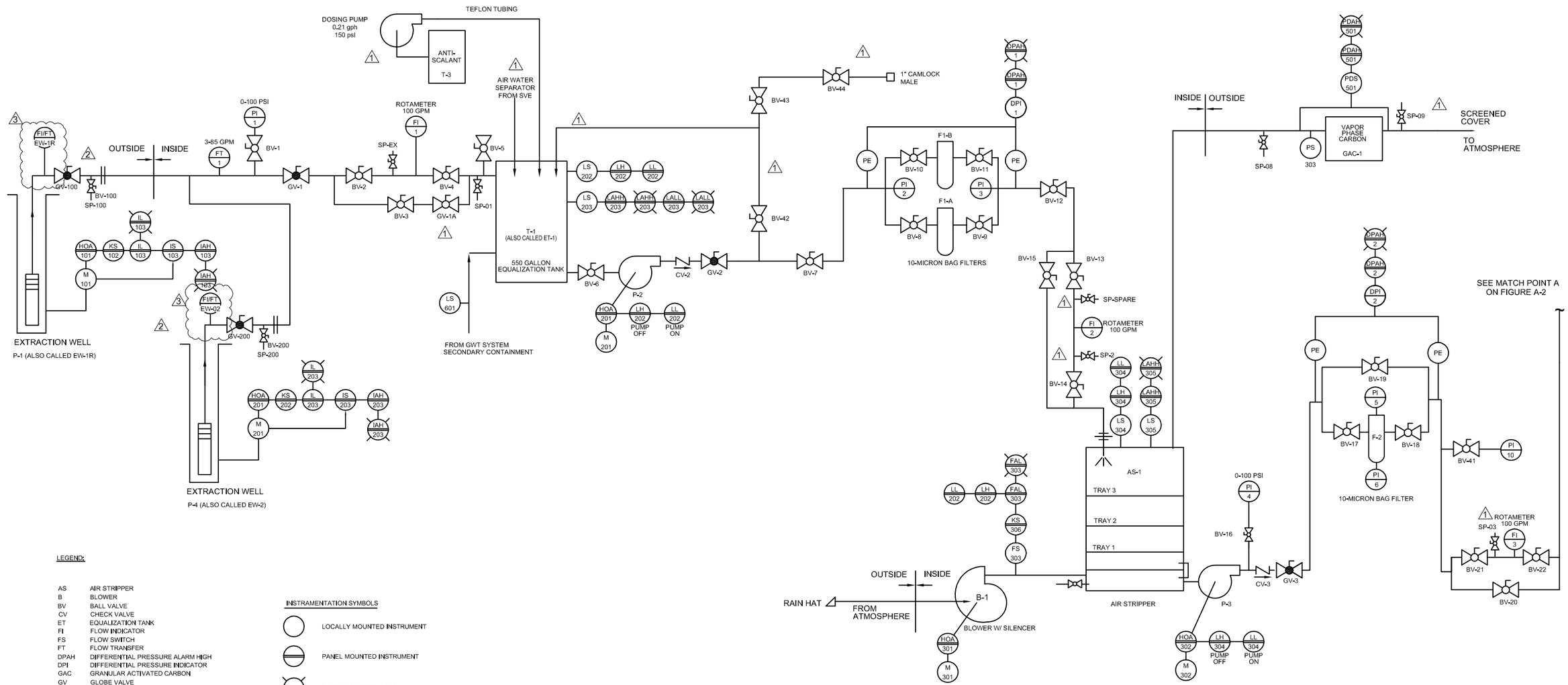

LEGEND:

AS	AIR STRIPPER
B	BLOWER
BV	BALL VALVE
CV	CHECK VALVE
ET	EQUALIZATION TANK
FI	FLOW INDICATOR
FS	FLOW SWITCH
FT	FLOW TRANSFER
DPAH	DIFFERENTIAL PRESSURE ALARM HIGH
DPI	DIFFERENTIAL PRESSURE INDICATOR
GAC	GRANULAR ACTIVATED CARBON
GV	GLOBE VALVE
HOA	HAND - OFF - AUTO
IAH	ELECTRICAL CURRENT ALARM HIGH
IEX	ION EXCHANGE
IL	ELECTRICAL CURRENT LOW
IS	ELECTRICAL CURRENT SWITCH
KS	TIME SWITCH
LAHH	LEVEL ALARM HIGH HIGH
LALL	LEVEL ALARM LOW LOW
LH	LEVEL HIGH
LL	LEVEL LOW
LS	LEVEL SWITCHES
M	MOTOR
P	PUMP
PDAH	PRESSURE DIFFERENTIAL ALARM HIGH
PDS	PRESSURE DIFFERENTIAL SWITCHES
PE	PRESSURE ELEMENT
PI	PRESSURE INDICATOR
SP	SAMPLE PORT
T	TANKS

INSTRAMENTATION SYMBOLS

- LOCALLY MOUNTED INSTRUMENT
- PANEL MOUNTED INSTRUMENT
- PANEL MOUNTED LIGHT
- FLANGED GLOBE VALVE
- BALL VALVE
- SAMPLE PORT
- CHECK VALVE
- UNION
- FLANGE

REFERENCES
TITLE

NOTE: REFERENCE
ORIGINAL DESIGN BY
DIVERSIFIED REMEDIATION AND CONTROLS, INC.
ORIGINAL DRAWING REFERENCED FROM
MONTGOMERY WATSON HARZA

AS-BUILTS

DRAWING SCALE

0 1 INCH

IF THIS BAR IS LESS THAN ONE INCH, IT IS A REDUCED PRINT. SCALE REDUCED SHEET ACCORDINGLY.

REVISIONS

NO.	BY.	DATE	DESCRIPTION
1	TM	3/19/10	URS MINOR CHANGES AND UPDATES
2	JAC	8/2011	EW-02 INSTALL AND MINOR CHANGES
3	TM	9/2012	AS-BUILTS

REVISIONS

NO.	BY.	DATE	DESCRIPTION

DRAWING SCALE	AS NOTED	
		DATE
DESIGNED BY:	TM	8/23/2011
DRAWN BY:	RPT	8/23/2011
CHECKED BY:	ET	8/23/2011
APPROVED BY:	RB	8/23/2011

URS
2870 Gateway Oaks Drive, Suite 150
Sacramento, CA 95833
TEL: (916) 679-2000
FAX: (916) 679-2900

MODESTO SUPERFUND SITE
EW-02 INSTALLATION
MODESTO, CALIFORNIA

GROUNDWATER TREATMENT P&ID

JOB NO. 17326524
CONTRACT/TASK ORDER NO. 03AA14C1
SHEET NO. **1-1**

PLOT BY: DAVID_LARSON – Oct 12, 2012 – 9:03:29am
DRAWING: H:\CADD\Current\Modesto\Superfund Site EW-02 Installation\Drawings\Modesto-EW02_I-1.dwg
IMAGES:

This page is intentionally left blank.

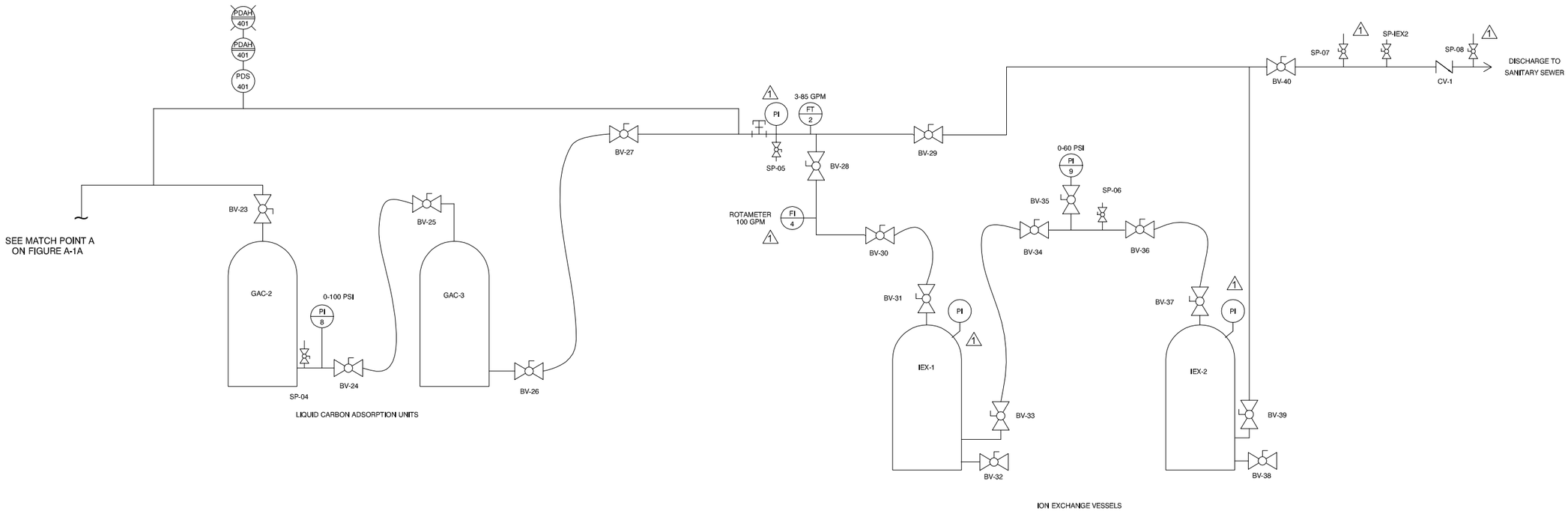

LEGEND:

AS	AIR STRIPPER
B	BLOWER
BV	BALL VALVE
CV	CHECK VALVE
ET	EQUALIZATION TANK
FI	FLOW INDICATOR
FS	FLOW SWITCH
FT	FLOW TRANSFER
DPAH	DIFFERENTIAL PRESSURE ALARM HIGH
DPI	DIFFERENTIAL PRESSURE INDICATOR
GAC	GRANULAR ACTIVATED CARBON
GV	GLOBE VALVE
HOA	HAND - OFF - AUTO
IAH	ELECTRICAL CURRENT ALARM HIGH
IEX	ION EXCHANGE
IL	ELECTRICAL CURRENT LOW
IS	ELECTRICAL CURRENT SWITCH
KS	TIME SWITCH
LAHH	LEVEL ALARM HIGH HIGH
LH	LEVEL HIGH
LL	LEVEL LOW
LS	LEVEL SWITCHES
M	MOTOR
P	PUMP
PDAH	PRESSURE DIFFERENTIAL ALARM HIGH
PDS	PRESSURE DIFFERENTIAL SWITCHES
PE	PRESSURE ELEMENT
PI	PRESSURE INDICATOR
SP	SAMPLE PORT
T	TANKS

INSTRAMENTATION SYBOLS

- LOCALLY MOUNTED INSTRUMENT
- PANEL MOUNTED INSTRUMENT
- PANEL MOUNTED LIGHT
- BALL VALVE
- SAMPLE PORT
- CHECK VALVE

REFERENCES
TITLE

NOTE: REFERENCE
DESIGN BY
DIVERSIFIED REMEDIATION AND CONTROLS, INC.
ORIGINAL DRAWING REFERENCED FROM
MONTGOMERY WATSON HARZA

DRAWING SCALE AS NOTED

IF SHEET IS LESS THAN 22" X 34", IT IS A REDUCED PRINT. SCALE REDUCED SHEET ACCORDINGLY.

REVISIONS

NO.	BY.	DATE	DESCRIPTION
1	TM	3/19/10	URS MINOR CHANGES AND UPDATES

REVISIONS

NO.	BY.	DATE	DESCRIPTION

DRAWING SCALE	AS NOTED	
		DATE
DESIGNED BY:	TM	03/19/10
DRAWN BY:	RPT	03/19/10
CHECKED BY:		
APPROVED BY:		

URS
2870 Gateway Oaks Drive, Ste. 150
Sacramento, CA 95833-3200
TEL: (916) 679-2000
FAX: (916) 679-2900

MODESTO SUPERFUND SITE
MODESTO, CALIFORNIA

GROUNDWATER TREATMENT P&ID

JOB NO.
PROJECT
SHEET NO. 1-2

PLOT BY: ROBERT_P_TAYLOR – Mar 19, 2010 – 11:38:02am
DRAWING: T:\current–work files\Modesto\drawings\
DRAWING: 031910–Modesto_1–2.dwg

This page is intentionally left blank.

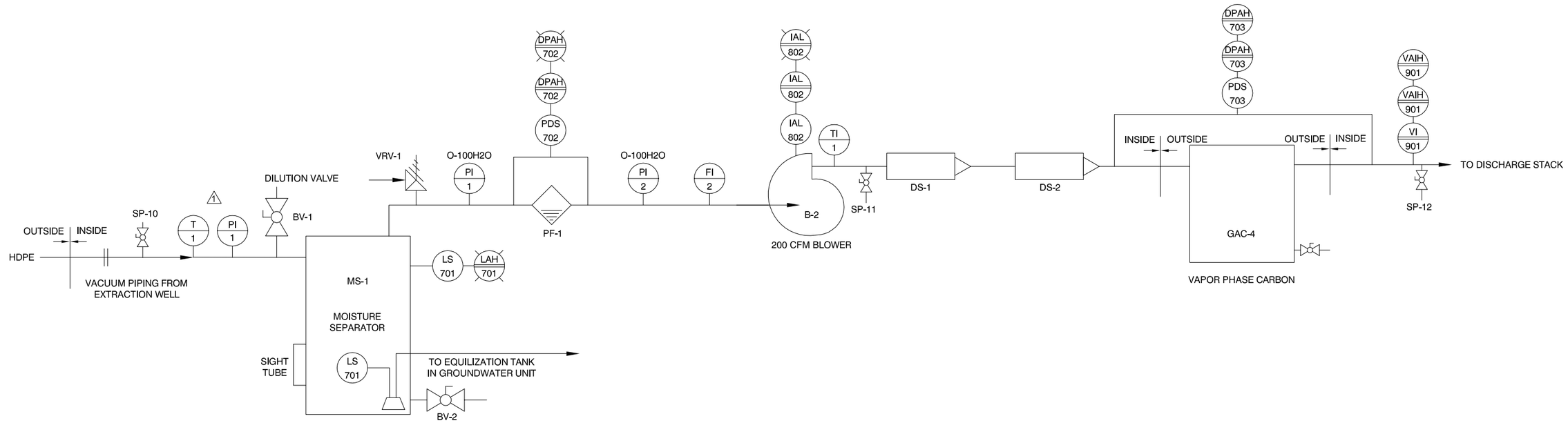

KEY

A ALARM, ACTIVATED
B BALL, BLOWER
C CARBON, CONTROL
D DISCHARGE, DIFFERENTIAL
F FILTER, FLOW
G GRANULAR
E ELECTRIC CURRENT,
I INDICATOR
L LEVEL, LIGHTING, LOW
M MOTOR, MOISTURE
P PANEL, PARTICULATE, PORT, POWER, PRESSURE R RELIEF
S SAMPLING, SENSOR, SEPARATOR, SILENCER, SWITCH
T TEMPERATURE, TRANSFORMER
V VALVE, VACUUM, VOLATILE ORGANIC COMPOUND

REFERENCES
TITLE

NOTE: REFERENCE
DESIGN BY
DIVERSIFIED REMEDIATION AND CONTROLS, INC.
ORIGINAL DRAWING REFERENCED FROM
MONTGOMERY WATSON HARZA

NOTES:
1. ALL VACUUM PROCESS PIPING IS 4" Ø SCH80 PVC
2. DISCHARGE STACK IS 8" Ø SCH80 PVC

DRAWING SCALE AS NOTED

IF SHEET IS LESS THAN 22" X 34", IT IS A REDUCED PRINT. SCALE REDUCED SHEET ACCORDINGLY.

REVISIONS				REVISIONS			
NO.	BY.	DATE	DESCRIPTION	NO.	BY.	DATE	DESCRIPTION
1	TM	3/19/10	URS MINOR CHANGES AND UPDATES				

DRAWING SCALE	AS NOTED	
		DATE
DESIGNED BY:	TM	03/19/10
DRAWN BY:	RPT	03/19/10
CHECKED BY:		
APPROVED BY:		

URS
2870 Gateway Oaks Drive, Ste. 150
Sacramento, CA 95833-3200
TEL: (916) 679-2000
FAX: (916) 679-2900

MODESTO SUPERFUND SITE
MODESTO, CALIFORNIA

SOIL VAPOR EXTRACTION P&ID

JOB NO.
PROJECT
SHEET NO. **1-3**

PLOT BY: ROBERT_P_TAYLOR – Mar 19, 2010 – 11:38:49am
DRAWING: T:\current–work files\Modesto\drawings\
DRAWING: 031910–Modesto_1–3.dwg

This page is intentionally left blank.

Appendix B

Laboratory Analytical Data Tables

Table B1	**Site Contaminants of Concern**
Table B2	**Results Summary for Long-Term Monitoring, First Quarter 2015, Modesto Groundwater Superfund Site**
Table B3	**Results Summary for the Groundwater Treatment System, First Quarter 2015, Modesto Groundwater Superfund Site**

TABLE B1

SITE CONTAMINANTS OF CONCERN
MODESTO SUPERFUND SITE
MODESTO, CALIFORNIA

Contaminant of Concern	Discharge Limit
Tetrachloroethene (PCE)	0.5 μg/L
Toluene	15 μg/L
Uranium, total	20 pCi/L
pH	5-12

Notes:
μg/L - micrograms per liter
pCi/L - picoCuries per liter

This page intentionally left blank

TABLE B2. RESULTS SUMMARY FOR LONG-TERM MONITORING
FIRST QUARTER 2015, MODESTO GROUNDWATER SUPERFUND SITE

Location	Field Sample Identification	Matrix	Method	Sample Type	Date Sampled	Analyte	Result	Reporting Limit	Units	Qualified Result
EW-02	EW-02	WG	E524.2	NS	1/29/2015	Chloroform	2.60	0.500	µg/L	
						Tetrachloroethene	98	10	µg/L	
MW-01A	MW-01A	WG	E524.2	NS	1/30/2015	Acetone	9.80	4	µg/L	J+
						Chloroform	0.300	0.500	µg/L	J
						Tetrachloroethene	0.300	0.500	µg/L	J
MW-02A	MW-02A	WG	E524.2	NS	1/30/2015	Acetone	3.20	4	µg/L	J
						Chloroform	2	0.500	µg/L	
						Tetrachloroethene	4.70	0.500	µg/L	
MW-03A	MW-03A	WG	E524.2	NS	1/30/2015	Acetone	8.40	4	µg/L	J+
						Chloroform	0.500	0.500	µg/L	
						Tetrachloroethene	270	10	µg/L	
MW-04A	MW-4A	WG	E524.2	NS	1/29/2015	Acetone	6.10	4	µg/L	J-
						Chloroform	4.40	0.500	µg/L	
						Tetrachloroethene	72	5	µg/L	J+
MW-04B	MW-4B	WG	E524.2	NS	1/29/2015	Tetrachloroethene	16	0.500	µg/L	
MW-04C	MW-4C	WG	E524.2	NS	1/29/2015	Acetone	8.30	4	µg/L	
						Tetrachloroethene	1.70	0.500	µg/L	
MW-05A	MW-05A	WG	E524.2	NS	1/30/2015	Chloroform	0.300	0.500	µg/L	J
						Tetrachloroethene	60	2.50	µg/L	
MW-06A	MW-06A	WG	E524.2	NS	1/30/2015	Acetone	6.90	4	µg/L	J+
						Chloroform	6.90	0.500	µg/L	
						Tetrachloroethene	2.10	0.500	µg/L	
MW-07A	MW-07A	WG	E524.2	NS	1/30/2015	Chloroform	1.70	0.500	µg/L	
MW-08A	MW-08A	WG	E524.2	NS	1/30/2015	Chloroform	3.10	0.500	µg/L	
						Tetrachloroethene	22	0.500	µg/L	
MW-09B	MW-09B	WG	E524.2	NS	1/30/2015	Acetone	8.20	4	µg/L	J
						Tetrachloroethene	5.60	0.500	µg/L	
MW-10A	MW-10A	WG	E524.2	NS	1/29/2015	Acetone	2.70	4	µg/L	J
						Chloroform	7	0.500	µg/L	

TABLE B2 (Continued)

Location	Field Sample Identification	Matrix	Method	Sample Type	Date Sampled	Analyte	Result	Reporting Limit	Units	Qualified Result
MW-10A continued . . .										
						Tetrachloroethene	21	1	µg/L	
MW-10B	MW-10B	WG	E524.2	NS	1/29/2015	Chloroform	0.300	0.500	µg/L	J
						Tetrachloroethene	6.70	0.500	µg/L	
MW-10C	MW-10C	WG	E524.2	NS	1/29/2015	No Analytes Detected				
MW-11A	MW-11A	WG	E524.2	NS	1/30/2015	Acetone	9.40	4	µg/L	J
						Chloroform	3.80	0.500	µg/L	
						Tetrachloroethene	0.400	0.500	µg/L	J
	DUP-3	WG	E524.2	FD	1/30/2015	Acetone	13	4	µg/L	
						Chloroform	4.10	0.500	µg/L	
						Tetrachloroethene	0.400	0.500	µg/L	
MW-12A	MW-12A	WG	E524.2	NS	1/30/2015	Bromodichloromethane	0.700	0.500	µg/L	
						Chloroform	14	0.500	µg/L	
						Tetrachloroethene	6.40	0.500	µg/L	
						Trichlorofluoromethane	0.400	0.500	µg/L	J
MW-13A	MW-13A	WG	E524.2	NS	1/29/2015	Acetone	4.60	4	µg/L	J+
						Chloroform	2.80	0.500	µg/L	
						Tetrachloroethene	11	0.500	µg/L	
MW-14A	MW-14A	WG	E524.2	NS	1/30/2015	Acetone	9.50	4	µg/L	J
						Chloroform	0.800	0.500	µg/L	
						Tetrachloroethene	12	0.500	µg/L	
MW-15A	MW-15A	WG	E524.2	NS	1/30/2015	1,2-Dichloroethane	0.300	0.500	µg/L	J
						Chloroform	0.700	0.500	µg/L	
MW-16A	MW-16A	WG	E524.2	NS	1/30/2015	Acetone	7.40	4	µg/L	J
						Chloroform	1.60	0.500	µg/L	
MW-16B	MW-16B	WG	E524.2	NS	1/30/2015	Acetone	9	4	µg/L	J
						Chloroform	1	0.500	µg/L	
						Tetrachloroethene	7	0.500	µg/L	
	DUP-2	WG	E524.2	FD	1/30/2015	Acetone	12	4	µg/L	
						Chloroform	0.900	0.500	µg/L	

TABLE B2 (Continued)

Location	Field Sample Identification	Matrix	Method	Sample Type	Date Sampled	Analyte	Result	Reporting Limit	Units	Qualified Result
MW-16B continued . . .										
						Tetrachloroethene	7.10	0.500	µg/L	
MW-16C	MW-16C	WG	E524.2	NS	1/30/2015	2-Butanone (Mek)	2.40	4	µg/L	J
						Acetone	7.10	4	µg/L	J
						Chloroform	0.300	0.500	µg/L	J
						Tetrachloroethene	1.70	0.500	µg/L	
MW-17A	MW-17A	WG	E524.2	NS	1/29/2015	Acetone	10	4	µg/L	J+
						Bromodichloromethane	0.300	0.500	µg/L	J
						Chloroform	6	0.500	µg/L	
						Tetrachloroethene	2.90	0.500	µg/L	
MW-17B	MW-17B	WG	E524.2	NS	1/29/2015	Acetone	9.30	4	µg/L	J+
						Chloroform	0.400	0.500	µg/L	J
						Tetrachloroethene	89	5	µg/L	
MW-17C	MW-17C	WG	E524.2	NS	1/29/2015	Acetone	12	4	µg/L	J+
MW-18A	MW-18A	WG	E524.2	NS	1/29/2015	Acetone	9.10	4	µg/L	J+
						Chloroform	5.20	0.500	µg/L	
						Tetrachloroethene	1.90	0.500	µg/L	
MW-19A	MW-19A	WG	E524.2	NS	1/30/2015	Chloroform	2	0.500	µg/L	
MW-19B1	MW-19B1	WG	E524.2	NS	1/30/2015	Acetone	2	4	µg/L	J
						Tetrachloroethene	0.400	0.500	µg/L	J
MW-20A	MW-20A	WG	E524.2	NS	1/30/2015	Bromodichloromethane	0.200	0.500	µg/L	J
						Chloroform	8.20	0.500	µg/L	
						Dichlorodifluoromethane	2.90	0.500	µg/L	
						Methylene Chloride	0.200	0.500	µg/L	J
						Tetrachloroethene	110	5	µg/L	
MW-20B	MW-20B	WG	E524.2	NS	1/30/2015	Tetrachloroethene	47	2.50	µg/L	
MW-20C	MW-20C	WG	E524.2	NS	1/30/2015	No Analytes Detected				
MW-21A	MW-21A	WG	E524.2	NS	1/30/2015	Acetone	7.60	4	µg/L	J
						Chloroform	4.10	0.500	µg/L	
						Tetrachloroethene	0.600	0.500	µg/L	

TABLE B2 (Continued)

Location	Field Sample Identification	Matrix	Method	Sample Type	Date Sampled	Analyte	Result	Reporting Limit	Units	Qualified Result
MW-22A	MW-22A	WG	E524.2	NS	1/30/2015	Acetone	7.10	4	µg/L	J
						Bromodichloromethane	0.200	0.500	µg/L	J
						Chloroform	7.20	0.500	µg/L	
						Methylene Chloride	0.300	0.500	µg/L	J
						Tetrachloroethene	0.300	0.500	µg/L	J
MW-23A	MW-23A	WG	E524.2	NS	1/29/2015	Acetone	5.80	4	µg/L	J+
						Chloroform	1.70	0.500	µg/L	
						Tetrachloroethene	28	1	µg/L	
MW-24B	MW-24B	WG	E524.2	NS	1/30/2015	Tetrachloroethene	60	2.50	µg/L	
MW-25B	MW-25B	WG	E524.2	NS	1/30/2015	Acetone	9.20	4	µg/L	J
						Tetrachloroethene	95	2.50	µg/L	
MW-26B	MW-26B	WG	E524.2	NS	1/30/2015	Acetone	10	4	µg/L	
						Tetrachloroethene	1.30	0.500	µg/L	
MW-27B	MW-27B	WG	E524.2	NS	1/30/2015	Acetone	10	4	µg/L	
	DUP-1	WG	E524.2	FD	1/30/2015	Acetone	8.90	4	µg/L	
MW-28B	MW-28B	WG	E524.2	NS	1/30/2015	Tetrachloroethene	62	5	µg/L	
MW-29B	MW-29B	WG	E524.2	NS	1/29/2015	Acetone	2.30	4	µg/L	J
						Tetrachloroethene	24	0.500	µg/L	
MW-30A	MW-30A	WG	E524.2	NS	1/30/2015	Acetone	9.80	4	µg/L	
						Chloroform	2.10	0.500	µg/L	
MW-30B	MW-30B	WG	E524.2	NS	1/30/2015	Acetone	12	4	µg/L	
						Tetrachloroethene	1.50	0.500	µg/L	
MW-31A	MW-31A	WG	E524.2	NS	1/30/2015	Acetone	8.20	4	µg/L	J
						Tetrachloroethene	3.30	0.500	µg/L	
MW-32B	MW-32B	WG	E524.2	NS	1/30/2015	Acetone	14	4	µg/L	
						Chloroform	0.400	0.500	µg/L	J
MW-32C	MW-32C	WG	E524.2	NS	1/30/2015	Acetone	10	4	µg/L	
MW-34B	MW-34B	WG	E524.2	NS	1/30/2015	Acetone	9.50	4	µg/L	
						Tetrachloroethene	12	0.500	µg/L	J+

TABLE B2 (Continued)

Location	Field Sample Identification	Matrix	Method	Sample Type	Date Sampled	Analyte	Result	Reporting Limit	Units	Qualified Result
MW-34B continued . . .										
	DUP-5	WG	E524.2	FD	1/30/2015	Acetone	9.60	4	µg/L	J
						Tetrachloroethene	12	0.500	µg/L	
MW-35B	MW-35B	WG	E524.2	NS	1/30/2015	Acetone	11	4	µg/L	
						Tetrachloroethene	8.30	0.500	µg/L	
						Trichloroethylene	0.300	0.500	µg/L	J

Matrix
WG = groundwater

Sample Type
FD = Field Duplicate
NS = Normal Sample

Units
µg/L = micrograms per liter

Qualified Results
J = Analyte concentration considered an estimated value because one or more quality control specifications were not met.
J+ = Analyte concentration considered an estimated value because one or more quality control specifications were not met, potential high bias.
J- = Analyte concentration considered an estimated value because one or more quality control specifications were not met, potential low bias.

This page is intentionally left blank.

TABLE B3. RESULTS SUMMARY FOR THE GROUNDWATER TREATMENT SYSTEM FIRST QUARTER 2015, MODESTO GROUNDWATER SUPERFUND SITE

Location	Field Sample Identification	Matrix	Method	Sample Type	Date Sampled	Analyte	Result	Reporting Limit	Units	Qualified Result
0000BLANK	MW-301-1Q15	WQ	E524.2	TB1	1/8/2015	No Analytes Detected				
	MW-302-1Q15				2/3/2015	Chloromethane	0.0900	0.500	µg/L	U
						Hexachlorobutadiene	0.0300	0.500	µg/L	U
						Methylene Chloride	0.330	0.500	µg/L	U
						N-Butyl Benzene	0.0200	0.500	µg/L	U
	MW-303-1Q15				3/5/2015	Chloroform	0.120	0.500	µg/L	J
						Chloromethane	0.150	0.500	µg/L	U
						N-Butyl Benzene	0.0200	0.500	µg/L	U
SP-01	GWTS-INF-0102	WG	D5174	NS1	1/8/2015	Uranium	57.8	1	pCi/L	
	GWTS-INF-0102	WG	E524.2	NS1	1/8/2015	Bromodichloromethane	0.140	0.500	µg/L	J
						Chloroform	4	0.500	µg/L	
						Cis-1,2-Dichloroethene	0.0700	0.500	µg/L	J
						Tetrachloroethene	180	5	µg/L	
						Trichloroethylene	0.140	0.500	µg/L	J
	GWTS-INF-0201				2/3/2015	Bromodichloromethane	0.140	0.500	µg/L	J
						Chloroform	4.10	0.500	µg/L	
						Chloromethane	0.0800	0.500	µg/L	U
						Cis-1,2-Dichloroethene	0.0800	0.500	µg/L	J
						Dichlorodifluoromethane	0.0500	0.500	µg/L	J
						Tetrachloroethene	180	5	µg/L	
						Trichloroethylene	0.150	0.500	µg/L	J
	GWTS-INF-0301				3/5/2015	Bromodichloromethane	0.140	0.500	µg/L	J
						Chloroform	3.80	0.500	µg/L	
						Chloromethane	0.0700	0.500	µg/L	U
						Tetrachloroethene	87	5	µg/L	
						Trichloroethylene	0.0700	0.500	µg/L	J
SP-03	CRB INF-0102	WG	E524.2	NS1	1/8/2015	Chloroform	0.160	0.500	µg/L	J
						Tetrachloroethene	2.50	0.500	µg/L	
	MW-104-0102	WG	E524.2	FD1	1/8/2015	Chloroform	0.160	0.500	µg/L	J

TABLE B3 (Continued)

Location	Field Sample Identification	Matrix	Method	Sample Type	Date Sampled	Analyte	Result	Reporting Limit	Units	Qualified Result
SP-03 continued . . .										
						Tetrachloroethene	2.40	0.500	µg/L	
	CRB INF-0201	WG	E524.2	NS1	2/3/2015	Chloroform	0.200	0.500	µg/L	J
						Chloromethane	0.130	0.500	µg/L	U
						Hexachlorobutadiene	0.0300	0.500	µg/L	U
						N-Butyl Benzene	0.0200	0.500	µg/L	U
						Tetrachloroethene	2.90	0.500	µg/L	
						Toluene	0.0500	0.500	µg/L	J
	CRB INF-0301				3/5/2015	Chloroform	0.170	0.500	µg/L	U
						Chloromethane	0.150	0.500	µg/L	U
						N-Butyl Benzene	0.0200	0.500	µg/L	U
						Tetrachloroethene	0.930	0.500	µg/L	
						Toluene	0.0900	0.500	µg/L	J
SP-04	CRB Mid-0102	WG	E524.2	NS1	1/8/2015	Chloroform	0.290	0.500	µg/L	J
						Tetrachloroethene	0.780	0.500	µg/L	
	CRB Mid-0201				2/3/2015	Chloroform	0.290	0.500	µg/L	J
						Chloromethane	0.0800	0.500	µg/L	U
						N-Butyl Benzene	0.0200	0.500	µg/L	U
						Tetrachloroethene	1.40	0.500	µg/L	
	CRB Mid-0301				3/5/2015	Chloroform	0.240	0.500	µg/L	U
						Chloromethane	0.0800	0.500	µg/L	U
						Tetrachloroethene	1.10	0.500	µg/L	
SP-05	CRB EFF-0102	WG	E524.2	NS1	1/8/2015	Chloroform	0.0600	0.500	µg/L	J
	Pre IEX-0201	WG	D5174	NS1	2/3/2015	Uranium	54.9	1	pCi/L	
	Pre IEX-0301				3/5/2015	Uranium	62.8	1	pCi/L	
SP-06	IEX Mid-0102	WG	D5174	NS1	1/8/2015	Uranium	0.197	1	pCi/L	
	MW-106-0102	WG	D5174	FD1	1/8/2015	No Analytes Detected				
	IEX Mid-0201	WG	D5174	NS1	2/3/2015	Uranium	0.228	1	pCi/L	
	IEX Mid-0301				3/5/2015	Uranium	0.713	1	pCi/L	
SP-07	EFF-0102	WG	D5174	NS1	1/8/2015	Uranium	11.9	1	pCi/L	

TABLE B3 (Continued)

Location	Field Sample Identification	Matrix	Method	Sample Type	Date Sampled	Analyte	Result	Reporting Limit	Units	Qualified Result
SP-07 continued . . .										
	EFF-0102	WG	E524.2	NS1	1/8/2015	Chloroform	0.0600	0.500	µg/L	J
						Toluene	0.0600	0.500	µg/L	J
	EFF-0102	WG	SM2540C	NS1	1/8/2015	Total Dissolved Solids	676	10	mg/L	
	EFF-0102	WG	SM2540D	NS1	1/8/2015	No Analytes Detected				
	EFF-0102	WG	SM5210B	NS1	1/8/2015	No Analytes Detected				
	MW-107-0102	WG	SM2540C	FD1	1/8/2015	Total Dissolved Solids	669	13	mg/L	
	MW-107-0102	WG	SM2540D	FD1	1/8/2015	No Analytes Detected				
	MW-107-0102	WG	SM5210B	FD1	1/8/2015	No Analytes Detected				
	EFF-0201	WG	E524.2	NS1	2/3/2015	Chloroform	0.180	0.500	µg/L	J
						Chloromethane	0.0900	0.500	µg/L	U
	EFF-0201	WG	SM2540C	NS1	2/3/2015	Total Dissolved Solids	660	10	mg/L	
	EFF-0201	WG	SM2540D	NS1	2/3/2015	No Analytes Detected				
	EFF-0201	WG	SM5210B	NS1	2/3/2015	No Analytes Detected				
	EFF-0301	WG	E524.2	NS1	3/5/2015	Chloroform	0.250	0.500	µg/L	U
						Chloromethane	0.100	0.500	µg/L	U
						Toluene	0.0600	0.500	µg/L	J
	EFF-0301	WG	SM2540C	NS1	3/5/2015	Total Dissolved Solids	688	13	mg/L	
	EFF-0301	WG	SM2540D	NS1	3/5/2015	No Analytes Detected				
	EFF-0301	WG	SM5210B	NS1	3/5/2015	No Analytes Detected				
SP-08	GWTS Pr GAC-0102	GS	TO15	NS1	1/8/2015	Benzene	0.420	1.10	PPBV	J
						Chloroform	9.50	1.10	PPBV	
						Dichlorodifluoromethane	0.610	1.10	PPBV	J
						M,P-Xylenes	0.300	1.10	PPBV	J
						Tetrachloroethene	300	1.10	PPBV	
						Toluene	0.520	1.10	PPBV	J
						Trichloroethylene	0.560	1.10	PPBV	J
						Trichlorofluoromethane	0.280	1.10	PPBV	J
	GWTS Pr GAC-0201				2/3/2015	Benzene	0.700	1.10	PPBV	U
						Chloroform	9.60	1.10	PPBV	

TABLE B3 (Continued)

Location	Field Sample Identification	Matrix	Method	Sample Type	Date Sampled	Analyte	Result	Reporting Limit	Units	Qualified Result
SP-08 continued . . .										
						Dichlorodifluoromethane	0.550	1.10	PPBV	J
						M,P-Xylenes	0.250	1.10	PPBV	U
						Tetrachloroethene	340	1.10	PPBV	
						Toluene	0.800	1.10	PPBV	U
						Trichloroethylene	0.490	1.10	PPBV	U
						Trichlorofluoromethane	0.210	1.10	PPBV	U
	GWTS Pr GAC-0301				3/5/2015	Benzene	0.270	1.10	PPBV	J
						Chloroform	8.70	1.10	PPBV	
						Dichlorodifluoromethane	0.560	1.10	PPBV	J
						M,P-Xylenes	0.100	1.10	PPBV	U
						Tetrachloroethene	160	1.10	PPBV	
						Toluene	0.380	1.10	PPBV	J
						Trichloroethylene	0.340	1.10	PPBV	J
SP-09	GWTS Stack-0102	GS	TO15	NS1	1/8/2015	Benzene	1.40	1.10	PPBV	
						Dichlorodifluoromethane	0.720	1.10	PPBV	J
						Freon 114	0.0960	1.10	PPBV	J
						Tetrachloroethene	4.50	1.10	PPBV	
						Trichlorofluoromethane	0.190	1.10	PPBV	J
	GWTS Stack-0201				2/3/2015	Benzene	1.20	1.10	PPBV	J
						Chloroform	1.90	1.10	PPBV	
						Dichlorodifluoromethane	0.600	1.10	PPBV	J
						Tetrachloroethene	8.60	1.10	PPBV	J
						Trichlorofluoromethane	0.320	1.10	PPBV	U
	MW-109-0201	GS	TO15	FD1	2/3/2015	Benzene	0.730	1.10	PPBV	J
						Chloroform	2	1.10	PPBV	
						Dichlorodifluoromethane	0.580	1.10	PPBV	J
						Tetrachloroethene	4.60	1.10	PPBV	J
						Trichlorofluoromethane	0.250	1.10	PPBV	U
	GWTS Stack-0301	GS	TO15	NS1	3/5/2015	Benzene	1	1.10	PPBV	J

TABLE B3 (Continued)

Location	Field Sample Identification	Matrix	Method	Sample Type	Date Sampled	Analyte	Result	Reporting Limit	Units	Qualified Result
SP-09 continued . . .										
						Chloroform	7	1.10	PPBV	
						Dichlorodifluoromethane	0.590	1.10	PPBV	J
						Tetrachloroethene	3.70	1.10	PPBV	
SP-10	IEXEFF-0102	WG	D5174	NS1	1/8/2015	Uranium	0.279	1	pCi/L	
	IEXEFF-0201				2/3/2015	Uranium	0.228	1	pCi/L	
	IEXEFF-0301				3/5/2015	No Analytes Detected				

Matrix
GS = soil gas
WG = groundwater
WQ = water quality

Sample Type
FD = Field Duplicate
NS = Normal Sample
TB = Trip Blank

Units
mg/L = milligrams/Liter
ppbv = parts per billion volume
pci/L = picoCuries/Liter
µg/L = micrograms/Liter

Qualified Results
J = Analyte concentration considered an estimated value because one or more quality control specifications were not met.
U = Analyte considered not detected due to external contamination.

This page is intentionally left blank.