FIELD SAMPLING PLAN

HALACO SUPERFUND SITE
REMEDIAL INVESTIGATION

OXNARD, CALIFORNIA

EPA CONTRACT NO. EP-S9-08-04
EPA TASK ORDER NO. 015-RIRI-09X6
CH2M HILL PROJECT NO. 385135

Prepared for
U.S. Environmental Protection Agency
Region 9
75 Hawthorne Street
San Francisco, California 94105

Prepared by
CH2M HILL
325 East Hillcrest Dr., Suite 125
Thousand Oaks, California 91360

September 2009

U.S. ENVIRONMENTAL PROTECTION AGENCY REGION IX

Plan Title:	Field Sampling Plan for Halaco Superfund Site Remedial Investigation
Site Name:	Halaco Superfund Site
Site Location:	Oxnard, California
City/State/Zip:	Oxnard, California
Site EPA ID#:	CAD009688052
Anticipated Sampling Dates:	October 2009 – May 2010
Prepared By:	Mark Wuttig, Artemis Antipas, and Josh Bale — September 2009 (Date)
Agency or Firm:	CH2M HILL, Inc.
Address:	325 East Hillcrest Dr., Suite 125
City/State/Zip:	Thousand Oaks, California 91360
Telephone:	805-371-7822
EPA Task Order Project Officer:	Wayne Praskins — Section: SFD — 415-972-3181 (Phone No.)
FSP Approval Date:	______________________

*

Approved: Mark Wuttig, P.G. [signature] — Date: September 18, 2009
CH2M HILL Project Manager

Approved: Artemis Antipas, Ph.D. [signature] — Date: September 18, 2009
CH2M HILL Quality Assurance Officer

Approved: ______________________ Date: ____________
EPA Remedial Site Manager

Approved: ______________________ Date: ____________
EPA Quality Assurance Officer

Approved: ______________________ Date: ____________
EPA Region IX Quality Assurance Reviewer

* *

Distribution List

Wayne Praskins	EPA Region IX Task Order Project Officer
Mark Wuttig	CH2M HILL Project Manager
Josh Bale	CH2M HILL Field Team Leader
Artemis Antipas	CH2M HILL QA Manager

Contents

Section **Page**

1 Objectives 1-1
1.1 Background 1-1
1.2 Objectives 1-2
1.3 RI Activities and Schedule 1-5

2 Site Background 2-1
2.1 Site Location and Description 2-1
2.2 Waste Disposal 2-2
2.3 Physical Setting 2-2
2.4 Ecological Setting 2-4
2.5 Historical Information 2-4

3 Sample Location Maps 3-1

4 Rationale for Sample Locations, Numbers, and Laboratory Analyses 4-1
4.1 Solid Matrix (Soil, Sediment, and Waste) and Soil Gas 4-1
4.1.1 Smelter Area Soils 4-1
4.1.2 Waste Management Area 4-4
4.1.3 Nature Conservancy Land Soils and Sediments – East 4-6
4.1.4 Nature Conservancy Land Soils and Sediments – North 4-7
4.1.5 Hueneme Parcel Soils 4-7
4.1.6 Oxnard Industrial Drain and Lagoon Sediments 4-8
4.1.7 Loading Dock Soils 4-9
4.1.8 McWane Boulevard Soils – North of NCL East 4-9
4.1.9 Wetland Area Sediments 4-10
4.1.10 Beach Dunes and Sediments 4-11
4.1.11 Additional Background Samples 4-11
4.2 Groundwater 4-12
4.2.1 Monitoring Wells 4-13
4.2.2 Piezometers 4-14
4.3 Surface Water 4-15
4.3.1 OID, Lagoon, Hueneme Drain, J Street Drain, and Ocean 4-16
4.3.2 Ditch South of WMU 4-17
4.3.3 NCL East 4-18
4.4 Air 4-18

5 Request for Analysis 5-1
5.1 Analytical Parameters 5-1
5.2 Request for Analyses 5-1

6 Field Methods and Procedures 6-1
6.1 Task-specific Methods and Procedures for Field Work 6-1
6.1.1 Task 1 – Sample Locating and Staking 6-1
6.1.2 Task 2 – Subsurface Utility Clearance prior to Field Activities 6-1
6.1.3 Task 3 – Visual Inspection for Presence of Process Slag Waste 6-1
6.1.4 Task 4 – Solid Matrix Sampling 6-2
6.1.5 Task 5 – Soil Gas Sampling 6-2
6.1.6 Task 6 – Cone Penetrometer Testing 6-3
6.1.7 Task 7 – Monitoring Well and Piezometer Installation and Surveying 6-3
6.1.8 Task 8 – Groundwater Sampling 6-4
6.1.9 Task 9 – Surface Water Sampling 6-4
6.1.10 Task 10 – Groundwater and Surface Water Level Measurement 6-5
6.1.11 Task 11 – Air Sampling 6-6
6.2 Sample Handling and Custody Methods and Procedures 6-6
6.2.1 Sample Containers and Preservatives 6-6
6.2.2 Quality Control Samples 6-6
6.2.3 Sample Naming Conventions 6-8
6.2.4 Sample Handling and Custody Requirements (from QAPP) 6-11
6.2.5 Sample Management Procedures and Documentation 6-14
6.3 General Methods and Procedures for Field Work 6-16
6.3.1 Field Equipment Calibration 6-16
6.3.2 Equipment Decontamination 6-17
6.4 Investigation-Derived Waste Management and Disposal 6-17

7 Health and Safety Plan 7-1

8 References 8-1

Appendices

Appendix A Field Standard Operating Procedures

6-1 Location of Field Sampling Stations with Global Positioning System (GPS)
6-2 Positioning at Below-water Stations with Global Positioning System (GPS)
6-3 Ground Penetrating Radar (GPR)
6-4 Visual Inspection for Presence of Slag Waste
6-5 Direct-push Soil Sampling
6-6 Surface Soil/Hand-auger Soil and Sediment Sampling
6-7 Homogenization of Soil Samples
6-8 Vibracore Soil and Sediment Sampling
6-9 Geotechnical Soil and Sediment Sampling
6-10 Soil Logging
6-11 Soil Gas Probe Installation
6-12 Soil Gas Probe Sampling
6-13 General Guidance for Cone Penetrometer Testing (CPT)
6-14 Installation of Shallow Monitoring Wells
6-15 Installation of Deep Monitoring Wells
6-16 Installation of Piezometers
6-17 Low-flow Groundwater Sampling
6-18 Surface Water Sampling
6-19 Water-level Measurements
6-20 Air Sampling
6-21 Documentation and Records
6-22 Digital Camera Use and Documentation
6-23 Calibration of Field Instruments
6-24 Decontamination of Sampling Equipment

Appendix B GPS Coordinates for Sample Locations

B-1 Solid Matrix Samples
B-2 Soil Gas Matrix Samples
B-3 Water Matrix Samples (Surface Water and Groundwater)
B-4 Air Matrix Samples
B-5 Geotechnical Samples

Appendix C U.S. EPA Region IX Instructions for Sampling Shipping and Documentation

Tables (provided in Section 5, Request for Analysis)

Analytical Parameter, Test Method, and Target Detection Limit Tables

5-1 Laboratory Analytical Parameters, Test Methods, and Target Detection Limits.

5-1.1 Metals for Water, Soil, Sediment, and Air
5-1.2 VOCs for Water, Soil, Sediment, and Soil Gas
5-1.3 SVOCs for Water, Soil, and Sediment
5-1.4 PCBs for Soil and Sediment
5-1.5 Dioxins and Furans for Soil and Sediment
5-1.6 Radionuclides for Water, Soil, and Sediment
5-1.7 Ammonia and Other Gases for Soil Gas
5-1.8 Additional Organic and Inorganic Parameters for Water and Soil

5-2 Geotechnical Analytical Parameters and Test Methods

Request for Analysis Tables

5-3 Request for Analysis, Solid Matrix Samples
5-4 Request for Analysis, Soil Gas Matrix Samples
5-5 Request for Analysis, Water Matrix Samples (Surface Water and Groundwater)
5-6 Request for Analysis, Air Matrix Samples
5-7 Request for Analysis, Geotechnical Samples
5-8 Request for Analysis, Field Blanks

Tables (provided at end of text)

4-1 Summary of Planned RI Samples
4-2 Numbers of Planned RI Samples

6-1 Monitoring Well Construction, Elevations, and Depths
6-2 Oxnard Sewer Line Construction, Elevations, and Depths
6-3 Piezometer Construction, Elevations, and Depths

Figures (provided in Section 3, Maps)

RI Sample Location Maps

A-1 Solid Matrix Sample Locations, Overview
A-2 Solid Matrix Sample Locations, Smelter Parcel
A-3 Solid Matrix Sample Locations, Waste Management Area
A-4 Solid Matrix Sample Locations, Ditch South of WMU
A-5 Solid Matrix Sample Locations, NCL East
A-6 Solid Matrix Sample Locations, NCL North
A-7 Surface Water Sample Locations
A-8 Groundwater Monitoring Well Locations
A-9 Air Sample Locations
A-10 Transects for Visual Inspection for Presence of Slag Waste

Figures (provided at end of text)

Background Figures

1 Halaco Site (aerial photo)
2 Site Location and Site Areas
3 Conceptual Site Model Diagram, Screening-level Human Health Risk Assessment
4 Conceptual Site Model Diagram, Screening-level Ecological Risk Assessment
5 Areas Recommended for Additional Sampling
6a Bubble Plots Depicting Shallow Soil and Sediment Contamination, Zoom-out
6b Bubble Plots Depicting Shallow Soil and Sediment Contamination, Zoom-in
6c Bubble Plots Depicting Deep Soil and Sediment Contamination, Zoom-out
7 Box Plot for Copper in Soil and Sediment
8 Former and Current Tank Locations
9 Groundwater Levels and Monitoring Well Locations
10 Surface Water Sampling Locations
11 Metals Concentrations in Air Samples, June 2006
12 Monthly Wind Roses for Oxnard Airport Meteorological Data, 2004 and 2005

Field Methods and Procedures Figures

6-1 Oxnard Sewer Line and Piezometer Elevations

Acronyms and Abbreviations

95UCL	95 percent upper confidence limit
µg/kg	micrograms per kilogram
µg/L	micrograms per liter
µmhos/cm	micromhos per centimeter
bgs	below ground surface
City	City of Oxnard
CLP	Contract Laboratory Program
COPC	constituent of potential concern
COPEC	constituent of potential ecological concern
CPT	cone penetrometer testing
CSM	conceptual site model
CUPA	Certified Unified Program Agency
DHS	California Department of Health Services (now California Department of Public Health (DPH)
DO	dissolved oxygen
DPH	California Department of Public Health
DQO	data quality objective
DTSC	California Department of Toxic Substances Control
EC	electrical conductivity
EPA	U.S. Environmental Protection Agency
ERGS	Environmental Radiological Ground Scanner
FCGMA	Fox Canyon Groundwater Management Agency
FSP	Field Sampling Plan
GPR	ground penetrating radar
GPS	global positioning system
Halaco	Halaco Engineering Company
HHRA	human health risk assessment
HSA	hollow stem auger
IDW	investigation derived waste
LAS	Lower Aquifer System
MCL	maximum contaminant level
MS/MSD	matrix spike/matrix spike duplicate
mg/kg	milligrams per kilogram
mg/L	milligrams per liter
MNA	Monitored Natural Attenuation
NAD 83	North American Datum of 1983
NAVD 88	North American Vertical Datum of 1988
ND	Not detected
NCL	Nature Conservancy Land
NPL	National Priorities List
OID	Oxnard Industrial Drain
ORP	oxidation reduction potential

PCBs	polychlorinated biphenyls
pCi/g	picocuries per gram
pCi/L	picocuries per liter
ppm	parts per million
PRG	preliminary remediation goal
QAPP	Quality Assurance Project Plan
QC	Quality Control
RI	Remedial Investigation
RWQCB	Regional Water Quality Control Board
SVOC	semi-volatile organic compound
T	Temperature
TDS	total dissolved solids
TOC	total organic carbon
TNC	The Nature Conservancy
TOPO	Task Order Project Officer
TPH	total petroleum hydrocarbons
UAS	Upper Aquifer System
USGS	U.S. Geological Survey
UST	Underground Storage Tank
UWCD	United Water Conservation District
VCWPD	Ventura County Watershed Protection District
VOC	volatile organic compound
WDA	Waste Disposal Area
WMU	Waste Management Unit
WRA	WRA Environmental Consultants
WWTP	Wastewater Treatment Plant
XRF	X-ray fluorescence

SECTION 1

Objectives

This Field Sampling Plan (FSP) has been prepared to support field and laboratory activities associated with the remedial investigation (RI) for the Halaco Superfund Site, Oxnard, California, by the U.S. Environmental Protection Agency (EPA). The field activities will include (1) groundwater monitoring well installation and (2) sampling and analysis of outdoor air, sediment, surface and subsurface soils, soil gas, surface water, groundwater, and Halaco waste. This FSP was developed in accordance with EPA Region IX, Guidance for Preparation of a U.S. EPA Region IX, Field Sampling Plan for EPA-Lead Superfund Projects (EPA, 1993 and updates) and accompanies the data quality objectives (DQOs), which can be found in the companion Quality Assurance Project Plan (QAPP [CH2M HILL, 2009]).

1.1 Background

Following is a general description of the primary Site problems that are the focus of this RI. The environmental data generated from this FSP and the companion QAPP (CH2M HILL, 2009) will be used to support site characterization, ecological and human health risk assessment, feasibility study, and remedy selection activities for the Site.

In September 2007, the EPA added the former Halaco Engineering Company (Halaco) facility and adjacent areas of contamination (the Site) to the Superfund National Priorities List (NPL). Shortly thereafter, EPA began an RI to determine the nature and extent of contamination at the Site, identify human health and ecological risks posed by the contamination, and identify areas needing remediation.

While the Site was evaluated for placement on the NPL, two removal actions were completed to address immediate Site risks. The first removal action, completed by the property owners between August 2006 and February 2007, included the removal of drums and other hazardous substances from the Site, and the installation of fencing, silt curtain, and straw wattles around the waste pile. A second, EPA-funded removal action was completed in 2007 to stabilize and secure the Site and limit offsite migration of contaminated wastes. It included re-grading the waste pile to reduce the steepness of the slopes, placing matting on the slopes to reduce erosion, stabilizing the banks along the lower portion of the Oxnard Industrial Drain (OID), removing an estimated 9,000 cubic yards of waste from the smelter area, removing an estimated 7,600 cubic yards of material from a wetland area adjacent to the Halaco property, and installing more than 6,000 feet of fencing around the perimeter of the waste management area. See the "Team 9" report (2008) for additional details. Figure 1 is an aerial photo of the Site after the second removal action was completed. Figure 2 shows the Site and adjacent areas before the two removal actions.

Since the Site was added to the NPL, EPA has conducted periodic groundwater and surface water level monitoring; worked with the property owners to repair and maintain erosion control measures; worked with the property owners, the Oxnard police, and the community to prevent unauthorized access to the Site; completed two technical reports on Site

contamination (CH2M HILL 2008a and 2008b); and prepared the testing plan (EPA Region 9, 2009).

Figures 3 and 4 present human health and ecological risk conceptual site models (CSMs) for the Site presented in the *Screening-Level Ecological and Human Health Risk Assessment, Halaco Site* (CH2M HILL, 2008b). They depict the primary source of contamination at the Site (the smelter), possible release mechanisms (e.g., deposition of air emissions; discharge of wastewater or waste solids to the Waste Management Unit [WMU], Waste Disposal Area [WDA], and smelter area; surface runoff; leaching to groundwater), the different media that may have been contaminated (e.g., soil, sediment, surface water, groundwater), and possible exposure routes (e.g., ingestion, inhalation, dermal contact, external radiation, plant uptake).

The CSMs also list potential receptors. Potential human receptors include residents and industrial/commercial workers. Recreational users and trespassers on or adjacent to the Site will also be added to the CSM. Potential ecological receptors are terrestrial and aquatic plants, invertebrates, amphibians, fish, reptiles, birds, and mammals.

1.2 Objectives

Specific objectives of the RI are to:

- Establish the nature and extent of contamination from Halaco's operations.
- Establish the fate and transport of contamination from Halaco's operations.
- Establish the risks to human health and the environment from the contamination from Halaco's operations.
- Identify the feasible remedial options to address unacceptable risk to human health and the environment from the contamination from Halaco's operations.
- Dispose of investigation derived waste (IDW).

Nature and Extent of Contamination

Specific questions regarding the nature and extent of contamination include:

- **Onsite Depth and Condition of Smelter Contamination –** Smelter waste solids and liquids were directly disposed at the smelter parcel from 1965 through about 1970 and then at the waste management area from about 1970 through 1992. What are the depths of the smelter waste solids? Are buried wastes in contact with and contaminating groundwater? Are buried waste materials still reactive and capable of generating ammonia and other gases?
- **Offsite Soil and Sediment Contamination –** Offsite soil and sediment contamination has been measured in the neighboring Nature Conservancy Land (NCL) East, the OID bisecting the site, and the lagoon and wetlands between the Site and the Ocean. What is the extent of this contamination, both horizontally and vertically? How much smelter waste material is there in the bottom sediments of the OID and lagoon? Is there waste offsite beyond the known areas of contamination?

- **Smelter Contaminant Types –** The primary contaminants include metals and radionuclides (thorium and decay products). Are there other contaminants that may pose unacceptable risks to human health and the environment, such as (1) organic compounds including polychlorinated biphenyls (PCBs), dioxins, and furan that have been associated with other smelter operations and (2) hydrocarbons from solvent usage, oil/fuel usage, and former or current oil/fuel tanks?
- **Oxnard Dump Materials –** Onsite smelter waste materials and contamination were deposited over the former City of Oxnard dump materials which predate the Halaco smelter operations. These dump materials were reportedly burned after disposal. Will the dump materials require or affect remedial activities at the Site?
- **Surface Water –** Historically, water quality data indicate that Halaco's operations adversely affected surface water quality. It is unclear if Halaco's wastes have had a measurable effect on surface water quality since Halaco stopped operation in 2002. What are the current impacts to surface water from residual contaminated sediments or discharge of potentially contaminated groundwater?
- **Groundwater –** Onsite shallow groundwater contamination has been measured in groundwater monitoring wells. No monitoring wells exist to assess offsite or deeper contamination. What is the lateral extent of offsite contaminated groundwater and how deep has it traveled?
- **Air –** Air sampling showed elevated metals in wind-blown dust downwind of the uncovered waste management area before the second, EPA-funded removal action in 2007. This removal action included re-grading the waste pile and placing matting on the slopes to reduce erosion. What is the current concentration of metals and radionuclides in air during winter conditions when air speeds are highest?

Fate and Transport of Contamination

Specific questions regarding the fate and transport of contamination include:

- **Surface Water –**Surface water chemistry in the OID and lagoon downstream of the Site is affected by natural processes, including the inland movement of seawater when the beach berm is breached and tides are high. What is the fate and transport of surface water contaminated by Halaco's operations, if any?
- **Groundwater –** Groundwater in the deeper drinking water aquifers underlying the site have been affected by saline intrusion from historical overdraft conditions (Upper Aquifer System and Lower Aquifer System). Shallow groundwater in the overlying Semiperched aquifer is recharged from surface water and may also be locally impacted by seawater that moves inland with the rising tide during breach conditions. What is the fate and transport of groundwater contaminated by Halaco's operations?
- **Air –** Air sampling showed elevated metals in wind-blown dust downwind of the uncovered waste management area before the second, EPA-funded removal action completed in 2007. These samples were collected during summer conditions when wind speeds are moderate and consistently from the west. What are the current effects of

stronger and more variable wind conditions on the fate and transport of wind-blown materials from the Site?

Human Health Risk Assessment

The screening-level human health risk assessment (HHRA) showed concentrations of metals and radionuclides above EPA Region 9 preliminary remediation goals (PRGs) and drinking water maximum contaminant levels (MCLs) (CH2M HILL, 2008b). What are the risks to human health from current contaminant levels for complete exposure pathways to potential residential and industrial/commercial receptors?

Ecological Risk Assessment

The screening-level ecological risk assessment showed concentrations of metals and radionuclides above ecological screening levels (CH2M HILL, 2008b). What are the risks to ecological receptors from current contaminant levels for complete exposure pathways to potential terrestrial and aquatic receptors?

Feasibility Study

Specific questions regarding the evaluation of feasible remedial options to address potentially unacceptable risks to human health and the environment include:

- **Smelter Parcel –** What are the depths, extent, volume, physical properties, and material strengths of the waste materials underlying the smelter buildings to evaluate excavation/removal or capping/redevelopment of the property as remedial alternatives?
- **Waste Management Area –** What are the depths, extent, volume, physical properties, and material strengths of the waste pile materials in the waste management area to evaluate excavation/removal or capping of the waste pile as remedial alternatives?
- **Nature Conservancy Land –** What are the depths, extent, and volume of the waste materials to evaluate excavation/removal as a remedial alternative?
- **OID and Lagoon –** What are the depths, extent, volume, and physical properties of the contaminated sediments in the OID and lagoon to evaluate excavation/removal or capping as a remedial alternative?
- **Groundwater –** What are the extent of contamination, aquifer properties, surface water-groundwater flow patterns, and general chemistry to evaluate hydraulic/physical containment or monitored natural attenuation (MNA) as a remedial alternative?
- **Waste Classification –** Does the smelter waste material underlying the smelter and waste management areas meet State or Federal definitions of hazardous waste to evaluate waste disposal alternatives/locations?

Investigation Derived Waste

Specific questions regarding the management and disposal of IDW include:

- What are the Federal, State, and local laws and regulations that are applicable to the management and disposal of IDW?
- What are the disposal alternatives for solid and liquid IDW?
- What are the allowable concentrations in solid and liquid IDW for the disposal alternatives?

1.3 RI Activities and Schedule

RI sampling and analysis activities will be performed to help achieve the objectives stated above. This will include the following field and laboratory activities.

Field Activities

Field activities will include:

- **Task 1 – Sample Locating and Staking.** Sample locations will be located and marked prior to field activities using a portable global positioning system (GPS) device with horizontal sub-meter accuracy. Locations on dry land will be staked prior to sampling. Locations submerged with water will be determined at the time that samples are collected. Sample locations will be documented after field activities using GPS if they are moved after initially locating them with GPS prior to field activities.
- **Task 2 – Subsurface Utility Clearance prior to Field Activities.** Drilling and subsurface sampling locations with a potential for subsurface utilities or other obstructions (e.g., underground storage tanks [USTs]) will be cleared prior to drilling. Locations will be cleared using Underground Service Alert of Southern California (DigAlert, dial "811") and, as needed, surface geophysical methods. The geophysical methods will include a high sensitivity metal detector, magnetometer, and ground penetrating radar (GPR).
- **Task 3 – Visual Inspection for Presence of Process Slag Waste.** A visual inspection of select surface and shallow subsurface areas will be performed to assess whether process slag waste is present. These areas will include the dirt road along McWane Blvd east of the OID, the wetland area south and west of the smelter area, and the wetland area south of the WMU. The visual observation will include a systematic slow walk in these areas. A shovel will be used to opportunistically remove near-surface soil and sand to visually inspect to a limited depth below ground surface. Discrete, obvious areas of process slag waste will not be excluded from the samples, but will be included if present at the sample location.
- **Task 4 – Solid Matrix Sampling.** Surface and subsurface solid matrix (soil, sediment, and waste) samples will be collected for laboratory analyses and logged in the field. The samples will be collected using a combination of methods. On dry land, shallow samples will be collected using disposable scoops and deeper samples will be collected using either direct push (e.g., Geoprobe) or hollow stem auger (HSA) drilling methods. In

areas submerged with water (OID, lagoon, NCL), samples will be collected using direct push methods deployed using a low-draft boat or barge.

- **Task 5 – Soil Gas Sampling**. Soil gas samples will be collected for laboratory analyses. The samples will be collected from temporary soil gas probes.
- **Task 6 – Cone Penetrometer Testing.** *In situ* cone penetrometer testing (CPT) will be performed to shallow and deeper depths within the semiperched aquifer zone to evaluate subsurface lithology, physical properties, and general water quality. This testing will also include the use of an Electrical Conductivity/Hydraulic Profile Tool (EC/HPT). The CPT results will be used to help plan and design the deeper groundwater monitoring wells to be installed within the semiperched aquifer zone (see next activity).
- **Task 7 – Monitoring Well and Piezometer Installation and Surveying.** Shallow water table groundwater monitoring wells and nested piezometers within the semiperched aquifer zone and deeper groundwater monitoring wells within the semiperched aquifer zone will be installed for groundwater sampling and water level measurements. Soil samples will be collected during drilling and logged in the field. New wells and piezometers will be surveyed by a Licensed Land Surveyor for horizontal coordinates and vertical elevations. Horizontal coordinates will be relative to North American Datum of 1983 (NAD 83) and vertical elevations will be relative to North American Vertical Datum of 1988 (NAVD 88).
- **Task 8 – Groundwater Sampling.** Two rounds of groundwater samples will be collected for laboratory analysis. Samples will be collected from existing groundwater monitoring wells and the new wells. Samples will be collected using minimal drawdown (low purge) methods with non-dedicated sampling pumps. Wells that do not yield sufficient water will be purged dry, allowed to recover, and then sampled. One round will be collected in the fall and one in the winter/spring.
- **Task 9 – Surface Water Sampling.** Two rounds of surface water samples will be collected for laboratory analysis. Samples will be collected using a scoop submerged beneath the water surface. One round will be collected in the fall and one in the winter/spring.
- **Task 10 – Groundwater and Surface Water Level Measurement.** Groundwater and surface water levels will be measured during each of the two sampling rounds to evaluate surface water and groundwater flow conditions. Surface water levels will be measured using three existing staff gauges already surveyed to NAVD 88. Groundwater levels will be measured from the existing wells already surveyed to NAVD 88 and the new wells and piezometers which will be surveyed to NAVD 88.
- **Task 11 – Air Sampling.** One round of air samples will be collected for laboratory analysis. The samples will be collected from temporary air sampling stations. The samples will be collected during periods of high winds over the winter to determine whether windblown material is moving offsite. The round of air samples will consist of six daily samples collected for each temporary sampling station.

Laboratory Activities

Laboratory activities will include:

- **Laboratory Analysis for Chemical Parameters.** Solid matrix (soil, sediment, and waste), soil gas, surface water, groundwater, and air samples will be analyzed at a fixed laboratory for (1) contaminants of potential concern (COPCs) to evaluate potential risks to human health, (2) contaminants of potential environmental concern (COPECs) to evaluate potential risks to ecological receptors, (3) and other additional parameters to evaluate the nature and extent of contamination and the fate and transport of contamination. COPCs and COPECs will include analysis of metals, radionuclides (thorium and radium isotopes), volatile organic compounds (VOCs), semivolatile organic compounds (SVOCs), total petroleum hydrocarbons (TPH), PCBs, dioxins, and ammonia. Additional parameters for groundwater and surface water will include field parameters (electrical conductivity [EC], pH, temperature [T], oxidation-reduction potential [ORP], dissolved oxygen [DO], turbidity) and general chemistry (EC, TDS, hardness, pH, major cations and anions, other anions, and nitrogen species).

- **Laboratory Analysis for Geotechnical Parameters.** Solid matrix (soil, sediment, and waste) samples will be analyzed at a fixed laboratory for geotechnical parameters to evaluate feasible remedial options to address potentially unacceptable risks to human health and the environment. The geotechnical parameters will include the following to measure physical properties and material strengths: moisture and density, particle size gradation, atterberg limits, modified proctor, and direct shear.

Schedule

The following tasks will be performed during the fall 2009:

- Task 1 – Sample Locating and Staking
- Task 2 – Subsurface Utility Clearance prior to Field Activities
- Task 3 – Visual Inspection for Presence of Process Slag Waste
- Task 4 – Solid Matrix Sampling
- Task 5 – Soil Gas Sampling
- Task 6 – Cone Penetrometer Testing
- Task 7 – Monitoring Well and Piezometer Installation and Surveying
- Task 8 – Groundwater Sampling – First of two rounds
- Task 9 – Surface Water Sampling – First of two rounds
- Task 10 – Groundwater and Surface Water Level Measurement – First of two rounds

The following tasks will be performed during the winter/spring 2010

- Task 8 – Groundwater Sampling – Second of two rounds
- Task 9 – Surface Water Sampling – Second of two rounds
- Task 10 – Groundwater and Surface Water Level Measurement – Second of two rounds
- Task 11 – Air Sampling

SECTION 2

Site Background

2.1 Site Location and Description

The Site is located in eastern Ventura County at 6200 Perkins Road in Oxnard, California (Figure 2). Halaco Engineering Company operated a secondary metal smelter at the Site from 1965 to 2004, recovering aluminum and magnesium for reuse. Halaco also reports that it recovered zinc until the 1970s. The Site includes an 11-acre parcel containing the former smelter and an adjacent 26-acre area where wastes were deposited and managed.

During its 40 years of operation, Halaco acquired scrap metal from more than 400 suppliers in a variety of forms and in varying levels of purity. Halaco processed dross, sludge, castings, sheets, pellets, granules, cans, car parts, and other scrap. Halaco reports that it processed one type of scrap, a low-level radioactive magnesium-thorium alloy, until about 1977. Other metals found in aluminum and magnesium alloys include copper, silver, zinc, lead, chromium, titanium, tin, manganese, and nickel.

The raw materials were received at the Perkins Road facility or at the railroad spur about one-half mile to the north, melted in Halaco's natural-gas-fired rotary furnaces, and then cast into various shapes and sizes (e.g., sows, pigs, ingots, anodes). Sodium chloride, potassium chloride, and magnesium chloride salts (known as "fluxes") were added to improve the recovery of aluminum and magnesium. The molten material in the furnace would stratify, and the recoverable metal was directly cast into large metal blocks or, at times, mixed with beryllium, manganese, mischmetal, cerium, zinc, and other alloying agents to produce alloys meeting specifications. Some scrap raw materials were washed onsite to remove dirt and other impurities before they were placed in the furnace.

The residual material ("dross") from the furnaces was placed in large, rotating horizontal drums ("washers") located next to the OID and sprayed with water to break up the dross, dissolve the salts, and separate recoverable metals. Water was reportedly drawn from the OID and Halaco's settling ponds. A slurry of water, salt, metal particles, and other solids was discharged from the washers into a shaker where larger solids were recovered and then sold, disposed, or returned to the smelter area for use as feedstock. The remaining slurry was pumped to onsite settling ponds until about September 2002.

Halaco reports that all operations ceased in September 2004.

In support of its operations, Halaco stored and used large quantities of diesel fuel and oil in its vehicles and equipment, and used petroleum-based solvents for cleaning. Halaco also operated equipment to reduce air pollutants in exhaust gases generated during smelting. Halaco initially operated venturi-type scrubbers, which were replaced by baghouse filters in about 1988. Lime and ammonia were used to raise the pH, neutralize acidic gases, and remove particulate matter. The equipment generated solid and/or liquid waste.

2.2 Waste Disposal

During its 40 years of operation, Halaco produced large quantities of solid and liquid waste. Most of the waste was "process waste" generated during the smelting process. Other waste was generated by the air pollution control equipment, and from used oil and spent solvent.

From 1965 to about 1970, Halaco discharged much or all of its process waste to a settling pond adjacent to the OID and used waste solids as fill in the smelter area. Historical documents indicate that Halaco considered discharging waste to the sewer in 1965, 1970, and 1979 but it is not known if discharges occurred.

After the Los Angeles Regional Water Quality Control Board (RWQCB) issued Waste Discharge Requirements in September 1970 (RWQCB, 1970), Halaco began pumping its wastewater across the OID into unlined earthen settling ponds in an area later named the WMU. Beginning in or before 1980, Halaco began moving waste solids from the WMU to the area immediately to the north known as the WDA.

Discharge to the WMU ended in late 2002, when Halaco began using a filter press and began discharging wastewater to the City sewer in accordance with an industrial waste discharge permit. Discharges to the sewer ceased in or before June 2003, after the City expressed concern about ammonia in its collection system and exceeded performance goals for metals discharged from Oxnard's wastewater treatment plant (WWTP). Halaco reports that it recycled wastewater onsite after discharge to the sewer stopped. Records indicate that an estimated 6,700 tons (or more) of filter cake or other waste were shipped offsite for disposal. Filter cake left onsite when Halaco ceased operations was later moved to the WMU.

In 2007, EPA estimated that more than 700,000 cubic yards of waste solids remained onsite. The bulk of the solids are in the WMU, which covers about 15 acres and rises up to 40 feet above grade.

Used oil and spent solvent were reportedly disposed onsite before 2000. Oil and/or solvent wastes were reportedly used as "fuel" in the rotary furnaces, observed dripping on the ground during use in the process building, and mixed with air pollution control equipment waste and put in Halaco's washers. Slurry from the washers was discharged to the onsite settling ponds, as described above.

Testing at the Site shows that elevated levels of a variety of metals are present in the waste, and that soils, sediments, and groundwater have been contaminated by Halaco's wastes. Constituents found at elevated levels include aluminum, barium, beryllium, cadmium, chromium, copper, lead, magnesium, manganese, nickel, and zinc. Elevated levels of radioactive thorium (and decay products) are also present in some areas of the Site. In past sampling, elevated levels of ammonia and petroleum hydrocarbons have been detected at the Site. The ammonia is believed to be a byproduct of the smelting process.

2.3 Physical Setting

The Site is located near the Pacific Ocean in Oxnard, California. Immediately to the north and east of the Site is a wetland area owned by The Nature Conservancy. To the south of the

Site are a wetland area, a lagoon, and the Pacific Ocean. To the north and west are the City's wastewater treatment plant and an industrial paper recycling plant. The predominant land uses near the Site are "Industry Coastal Dependent" and "Miscellaneous Open Space/Resource Protection." The Site is bisected by the OID, a surface water channel that drains upstream agricultural, commercial, and residential areas of the Oxnard Plain.

Most of Halaco's operations occurred in the 11-acre smelter area located to the west of the OID, which housed the rotary furnaces used for smelting and large cylindrical washers. The smelter area was also where raw and finished materials, equipment, fuel, oil, solvents, and other supplies were stored and used. To the east of the OID is the 26-acre waste management area that includes the WMU and WDA. The Site has been divided into the following study areas (Figure 2):

Study Area	**Location**
Smelter Area	Area west of the OID, where Halaco conducted most of its operations, and used some of its wastes as fill
Waste Management Unit (WMU)	Area east of the OID, where Halaco deposited most of its wastes
Waste Disposal Area (WDA)	Area east of the OID and north of the WMU, where Halaco wastes are also located
Oxnard Industrial Drain (OID)	Surface water channel bisecting the Site
Nature Conservancy Land (NCL-East and NCL-North)	Areas east and north of the Site, where some of Halaco's wastes are located
Wetlands Area	Area between the Site and the Pacific Ocean, fed by the OID and two other surface water channels (the J Street Drain and Hueneme Drain); this area includes the lagoon, beach, and ditch south of the WMU

Water levels in the OID, NCL, and wetlands area are above sea level most of the year because of a naturally occurring beach berm that limits the discharge of OID water to the ocean. The berm breaches occasionally (mostly during winter storm events), allowing the OID, NCL, and wetlands to temporarily drain to the ocean until water levels drop to near sea level or the berm is reestablished by natural processes.

Groundwater is present beneath the Site in three primary aquifer systems (from shallowest to deepest): the upper Semiperched Aquifer, the Upper Aquifer System (UAS), and the Lower Aquifer System (LAS). The Semiperched Aquifer extends to a depth of 50 to 150 feet below ground surface (bgs), generally has poor water quality, and is not used as a water supply. The Semiperched Aquifer is underlain by an extensive clay deposit that separates it from the underlying UAS and LAS. The UAS and LAS yield significant amounts of water and contain good quality water across the Oxnard Plain, except in coastal areas (including the Site) where overpumping has historically reduced groundwater levels below sea level and allowed seawater intrusion. The water supply wells closest to the Site are two inactive City of Port Hueneme wells approximately one-half mile to the northwest and an

agricultural well used for irrigation approximately one-half mile to the east. Water quality testing of the agricultural well in March 2007 did not show any evidence of contamination from the Site.

Sources of more detailed information on surface water and groundwater flow at the Site include the *Preliminary Evaluation of the Sources, Nature, Extent, and Movement of Contamination in Surface Water and Groundwater, Halaco Site* (CH2M HILL, 2008a). Sources of information on the topography, geology, hydrology, and marine processes near the Site include the *Ormond Beach Wetland Restoration Feasibility Plan: Hydrologic and Geomorphic Conditions Report* (Philip Williams & Associates [PWA], 2007).

2.4 Ecological Setting

Habitat near the Site includes coastal salt marsh, coastal freshwater/brackish wetland, and the southern foredune. The wetlands are part of the larger Ormond Beach wetland area, which was once a vast region of tidal marshlands extending from Port Hueneme (to the northwest) to Point Mugu (to the southeast). The wetlands are home to several endangered or threatened species and the focus of federal and state restoration efforts.

An extensive beach-dune complex runs along the southern boundary of the Site. The wetlands adjacent to the Site are a remnant of the once-extensive salt marsh and brackish water lagoon and dune system. These lagoons were located inland from a narrow strip of low sand dunes and fed by surface water runoff from upland areas. Periodically, the sand dunes were breached by high streamflows or winter storm waves, allowing seawater to enter the lagoons.

More detailed information on ecological resources near the Site is available in the *Screening-Level Ecological and Human Health Risk Assessment, Halaco Site (*CH2M HILL, 2008b), *Final Biological Assessment, Ormond Beach, Oxnard, Ventura County, California* (WRA, 2007), and other reports.

2.5 Historical Information

Information on the nature, extent, fate, and transport of contamination is available from information on Halaco operations and environmental conditions at the Site, including:

- Historical documents obtained from Federal, State, and local agencies with information about operations or environmental conditions at the Halaco Site (1965-2005)
- Responses to EPA Information Requests sent to Halaco personnel (2007)
- Historical aerial photographs (1929-1991)
- EPA Integrated Assessment (2006)
- EPA Radiation Screening (2006-07)
- EPA Smelter Sampling (2007)
- Ormond Beach Wetland Restoration Project (2006)
- EPA Surface Water and Groundwater Study (2008)

The types of information contained in these documents include descriptions of Halaco's smelting and waste disposal practices, Site chemical data (chemical concentrations in soil,

sediment, groundwater, surface water, fish, and air), Site radiologic data (levels of radioactivity), and water level measurements.

Agency Documents

EPA has reviewed hundreds of historical documents related to environmental conditions at the Site. Documents have been obtained from the files of the RWQCB (Los Angeles), California Department of Toxic Substances Control (DTSC), California Department of Public Health (DPH) Radiologic Health Branch, Oxnard Certified Unified Program Agency (CUPA), Ventura County Air Pollution Control District, and the Halaco bankruptcy trustee. Some of these documents are listed as references.

Responses to EPA Information Requests

In July 2007, EPA sent requests for information to Clarence Haack, John Haack, Robert Haack, and John David Gable. The four individuals worked for the former Halaco Engineering Company and/or owned property where Halaco operated. The responses, submitted to EPA in October 2007, include limited information on Halaco's operations (Gable, 2007; Haack, 2007).

Historical Aerial Photographs

EPA obtained and reviewed the following historical aerial photographs of the Site (Lockheed, 1982, 1991):

- 1929 (exact date unknown)
- October 10, 1945
- May 4, 1951
- October 2, 1959
- September 20, 1965
- October 11, 1969
- April 27, 1971
- March 26, 1972
- August 23, 1973
- March 4, 1974
- October 7, 1975
- May 16, 1978
- June 22, 1981
- January 10, 1991

These are available in the *Preliminary Evaluation of the Sources, Nature, Extent, and Movement of Contamination in Surface Water and Groundwater, Halaco Site* (CH2M HILL, 2008a).

The 1929 photograph shows little or no human impact at the Site. The 1945 through 1959 photographs show activity west of the OID that may be associated with the former City dump. The 1965 photograph shows industrial and waste disposal activity associated with Halaco's operations. The 1969 photograph shows fill material on the southeast corner of the smelter area pushing the OID further eastward toward its current alignment. The 1971 photograph shows the OID at its current alignment and the beginning of waste disposal on the east side in the WMU. The 1981 photo shows the early stages of waste disposal in the WDA. The 1991 photo shows waste disposal in both the WMU and WDA.

2006 Halaco Integrated Assessment – Chemical and Radiologic Data

The largest source of environmental data at the Site is a 2006 EPA sampling and analysis effort known as the Integrated Assessment (Weston, 2007).

Samples were collected in June 2006 from the smelter area, WMU, WDA, wetland area, OID, beach sands, marine sediments, Nature Conservancy property, a residential area north of the Site, and agricultural areas north and east of the Site. Samples analyzed in an offsite laboratory included about 115 soil, sediment, and solid waste samples; 10 surface water

samples; 14 groundwater samples; 35 air samples; and 9 composite fish samples. Soil and waste samples were collected to a depth of 8 feet in the smelter area, and a depth of 20 feet in the WMU. Samples were analyzed for up to 25 metals and, except for air and fish samples, five radionuclides (Ce-137, K-40, Th-228, Th-230, and Th-232). Approximately 337 soil, sediment, and waste samples were also analyzed for metals using X-ray fluorescence (XRF). XRF analysis is a relatively fast and inexpensive technique for determining the concentrations of metals in a sample, but is not able to measure the concentrations of metals with low atomic weights (e.g., beryllium, magnesium, and aluminum) and typically results in higher detection limits compared to the analytical methods used in an offsite fixed laboratory.

Samples collected in approximately 26 "background" locations believed to be unaffected by the Site were also analyzed.

Halaco Radiation Screening

Large parts of the Site have been screened for radioactivity with gamma radiation detectors.

In March 2006, the top and perimeter of the WMU were surveyed with hand-held sodium iodide detectors. Radiation levels were at or near background levels on top of the WMU, but above background in three areas around the perimeter of the WMU. The measured radiation spectrum was consistent with the presence of Th-232 and decay products in equilibrium. The largest of the three areas was at the southeast corner of the WMU, which was subsequently stabilized as part of EPA's 2007 action. Above-background radiation levels were also measured in portions of the smelter area.

In June 2006, EPA screened a large portion of the Site for radioactivity using a more sensitive, tractor-mounted gamma radiation detector known as the Environmental Radiological Ground Scanner (ERGS). The ERGS employs eight shielded sodium iodide detectors encased on five sides by lead shielding, and a GPS.

The ERGS was used to screen the northern portion of the smelter area, the WDA, the surface of most of the WMU, a portion of the NCL-East, a portion of the wetland area, and the beach. Areas with elevated gamma radiation (greater than two standard deviations above the median background level) were identified in the smelter area, wetland area, WDA, NCL-East, and on the beach. The waste materials in the wetland area were moved to the WMU in 2007. Follow-up testing indicated that the elevated levels on the beach were due to naturally occurring thorium-enriched "black sands." No significant anomalies were identified on the surface of the WMU. Most of the results are summarized in Appendix I of the Integrated Assessment (Weston, 2007).

In May and June 2007, additional screening for radioactivity was carried out with hand-held sodium iodide gamma radiation detectors on the eastern portion of the smelter property. The results indicated a large area with radiation levels above background, consistent with Halaco's use of waste material as fill between about 1965 and 1970.

2007 Halaco Smelter Sampling – Chemical and Radiologic Data

In June 2007, EPA collected and analyzed samples in the southeast portion of the smelter area (Team 9, 2008). Thirty-seven waste and soil samples were analyzed for metals and radionuclides, and groundwater samples from nine boreholes were analyzed for

radionuclides. All but two samples were collected onsite within or immediately adjacent to the smelter area. Two samples were identified as background.

2007 Removal Action Photographs and Topographic Maps

Detailed aerial photographs and topographic maps from immediately before (February 2007) and after (April 2007) EPA's 2007 removal action are available. These are available in the *Preliminary Evaluation of the Sources, Nature, Extent, and Movement of Contamination in Surface Water and Groundwater, Halaco Site* (CH2M HILL, 2008a).

2006 Ormond Beach Wetland Restoration Project – Chemical Data

In 2006, approximately 30 soil and sediment samples and 10 surface water samples were collected as part of the Ormond Beach Wetland Restoration Project (AMEC, 2006). Approximately 16 soil and sediment and seven surface water samples were located near the Site. These samples were analyzed for general chemistry, metals, PCBs, organochlorine pesticides, and TPH.

Eight soil samples were collected from the NCL and six soil samples from agricultural areas north and east of the Site. Two surface water samples were collected from the NCL, one sample from the OID upstream of the Site, two samples from the mouth of the OID and lagoon, and two samples from the J Street and Hueneme drains to the west and north of the Site. One wetland sediment sample and one soil sample were believed to represent background conditions.

2007/2008 EPA Surface Water and Groundwater Study

CH2M HILL (2008a) performed a surface water and groundwater study to compile and evaluate information on the sources, nature, and extent of surface water and groundwater contamination at the Halaco site, and the physical processes that affect the movement of the contaminants. A large amount of existing information was reviewed, a limited amount of new site-specific data were collected, and a conceptual model of groundwater and surface water flow at the Site was developed. The following types of information were obtained and evaluated:

- Precipitation
- Regional and local geology
- Regional aquifer system and groundwater elevations
- Topographic and surface water features in the vicinity of the Site
- Surface water and groundwater flow in the vicinity of the Site
- Surface water and groundwater chemistry in the vicinity of the Site
- Tidal, seasonal, and other temporal influences on surface water and groundwater flow and chemistry

Sources of existing information include:

- Site-specific studies of environmental conditions at the Halaco Site by Halaco, EPA, and other Federal, State, and local agencies

- Regional studies supporting wetlands restoration efforts for the Ormond Beach area by the California Coastal Conservancy and others

- Regional studies regarding surface water, groundwater, and water resource conditions across the Oxnard Plain by the U.S. Geological Survey (USGS), United Water Conservation District (UWCD), and others

New site-specific data collected by EPA and CH2M HILL included:

- Installing new surface water staff gauges at two locations
- Surveying the horizontal coordinates and vertical elevations of the Site's groundwater monitoring well network, two new staff gauges, an existing staff gauge, and a nearby regional, multi-level groundwater monitoring well
- Measuring surface water and groundwater levels monthly using a hand-held meter over a 1-year period from October 2007 through September 2008
- Measuring surface water and groundwater levels every 10 to 15 minutes using a transducer and data logger for selected time periods from October 2007 through September 2008
- Measuring groundwater EC on a one-time basis by lowering a hand-held probe down each of the Site's groundwater monitoring wells

Numerous agencies and firms were contacted to obtain information on surface water and groundwater conditions in the area, including UWCD, Fox Canyon Groundwater Management Agency (FCGMA), City of Oxnard (or City) Wastewater Division, and Ventura County Watershed Protection District (VCWPD).

SECTION 3

Sample Location Maps

This section provides the maps (figures) with the RI sample locations.

A-1 Solid Matrix Sample Locations, Overview
A-2 Solid Matrix Sample Locations, Smelter Parcel
A-3 Solid Matrix Sample Locations, Waste Management Area
A-4 Solid Matrix Sample Locations, Ditch South of WMU
A-5 Solid Matrix Sample Locations, NCL East
A-6 Solid Matrix Sample Locations, NCL North
A-7 Surface Water Sample Locations
A-8 Groundwater Monitoring Well Locations
A-9 Air Sample Locations
A-10 Transects for Visual Inspection for Presence of Slag Waste

The soil vapor sample locations are shown on the solid matrix sample location figures.

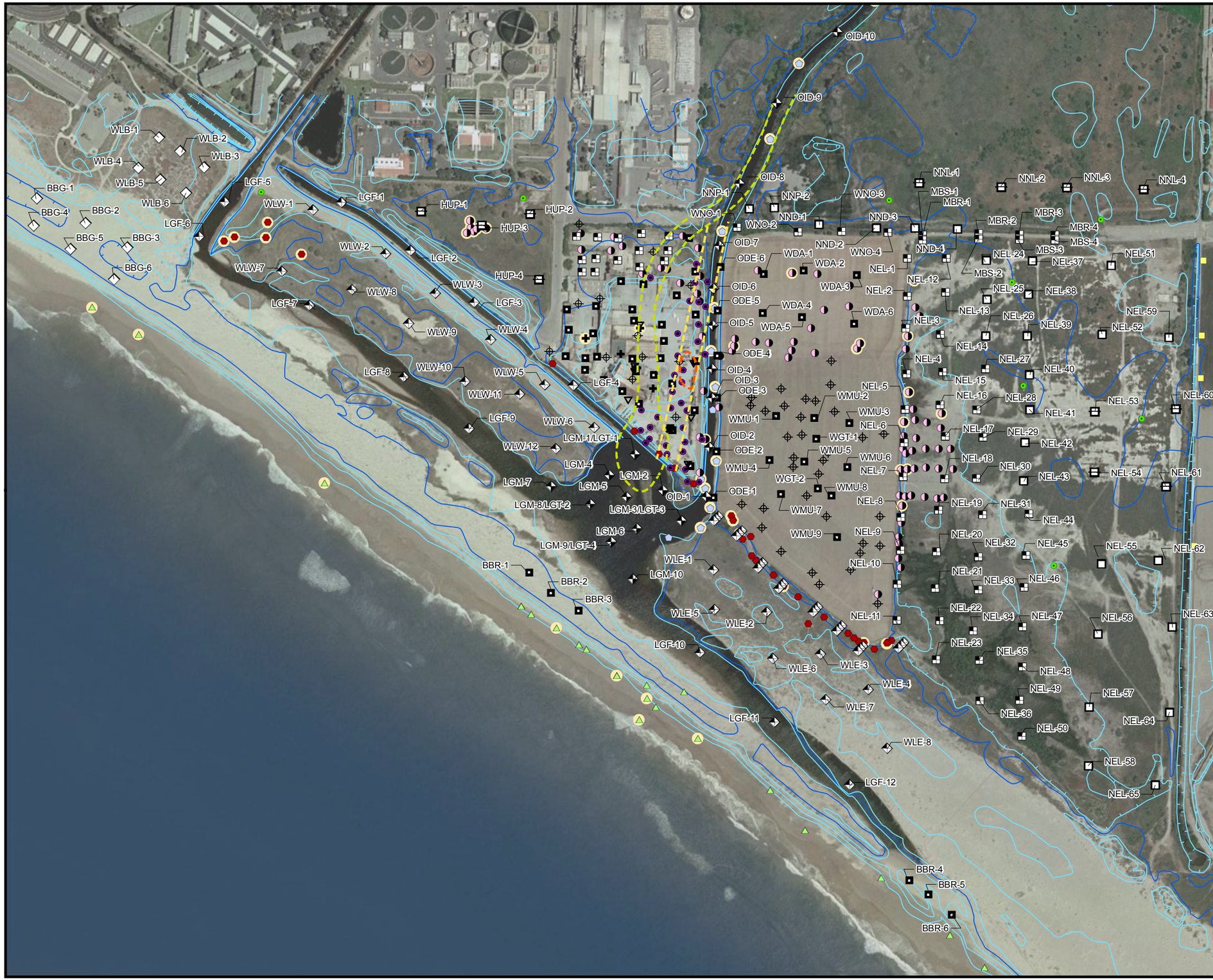

LEGEND

Planned Locations

	Matrix	Sample Depths
□	Soil	0 Feet
◇	Sediment	0 Feet
⊞	Soil	0,2 Feet
◇	Sediment	0,2 Feet
⊞	Soil	0,2,4 Feet
◇	Sediment	0,2,4 Feet
■	Soil	Deep
⊟	Soil	0,0,2 Feet
▽	Soil Gas	5 Feet
▼	Soil Gas	5,15,30 Feet
✸	CPT	Continuous

Historic Locations

Integrated Assessment Report Investigation (Weston, 2007)

- Surface Sediment Sample (SDF)
- Residential Sample (SSR)
- Agricultural Sample (SSA)
- Soil Sample (SSN)
- Soil Boring (SSN)
- Soil Boring (SW)
- Wetlands Sediment Sample (SWL)
- Beach Sediment Sample (SDB)
- Waste Samples from Smelter Area (SWF)
- Surface sample analyzed by lab

Southeast Smelter Investigation (EPA, 2007)

- SE Smelter Location

Ormand Beach Wetlands Restoration Investigation (AMEC, 2006)

- AMEC Locations

Ground Elevation Contours ft, MSL NAVD 1988 (AMEC 2006)

- 2-foot Contours
- 10-foot Contours

Historic Oxnard Industrial Drain (OID) Alignment

- 1929 OID
- 1959 OID
- 1969 Pond

N

400 200 0 400 Feet

1 inch = 400 feet

FIGURE A-1
Solid Matrix Sample Locations, Overview

HALACO SITE REMEDIAL INVESTIGATION
OXNARD, CALIFORNIA

CH2MHILL

BAO \\ZINFANDEL\PROJ\USENVIRONMENTALPROTE\358156HALACO\GIS\MAPFILES\2009\RI_SAP\REVISED_LOCATIONS\SOILD_MATRIX_SAMPLE_LOCS_OVERVIEW.MXD 9/11/2009 15:11:06

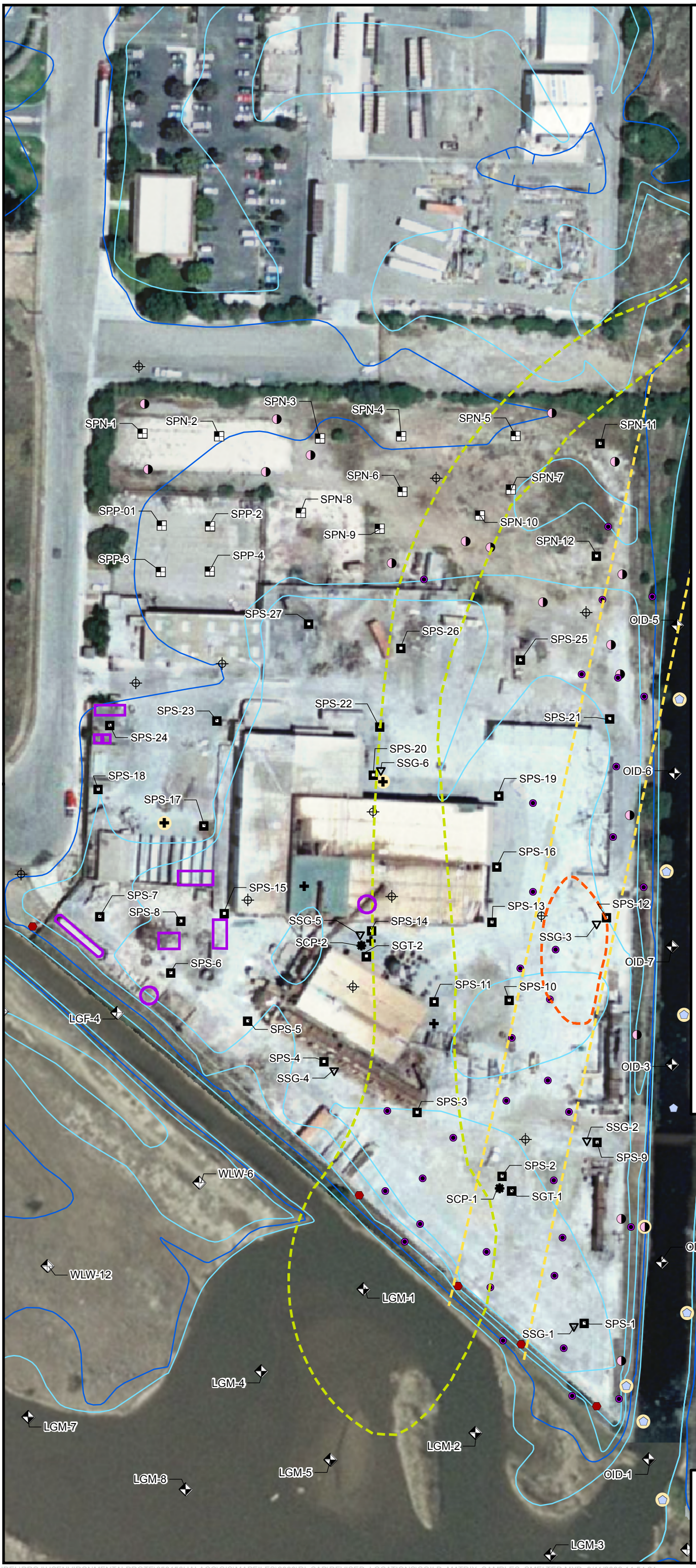

LEGEND

Planned Locations

	Matrix	Sample Depths
□	Soil	0 Feet
◇	Sediment	0 Feet
◪	Soil	0,2 Feet
◆	Sediment	0,2 Feet
◪	Soil	0,2,4 Feet
◆	Sediment	0,2,4 Feet
■	Soil	Deep
⊟	Soil	0,0,2 Feet
▽	Soil Gas	5 Feet
✹	CPT	Continuous

Historic Locations

Integrated Assessment Report Investigation (Weston, 2007)

- Surface Sediment Sample (SDF)
- Residential Sample (SSR)
- Agricultural Sample (SSA)
- Soil Sample (SSN)
- Soil Boring (SSN)
- Soil Boring (SW)
- Wetlands Sediment Sample (SWL)
- Beach Sediment Sample (SDB)
- Waste Samples from Smelter Area (SWF)
- Surface sample analyzed by lab

Southeast Smelter Investigation (EPA, 2007)

- SE Smelter Location

Ormand Beach Wetlands Restoration Investigation (AMEC, 2006)

- AMEC Locations

Ground Elevation Contours ft, MSL NAVD 1988 (AMEC 2006)

- 2-foot Contours
- 10-foot Contours

Historic Oxnard Industrial Drain (OID) Alignment

- 1929 OID
- 1959 OID
- 1969 Pond

Historic Structures

- Oil / Fuel Tanks

N

100 50 0 100 Feet

1 inch = 100 feet

FIGURE A-2
Solid Matrix Sample Locations
Smelter Parcel

HALACO SITE REMEDIAL INVESTIGATION
OXNARD, CALIFORNIA

CH2MHILL

BAO \\ZINFANDEL\PROJ\USENVIRONMENTALPROTE\358156HALACO\GIS\MAPFILES\2009\RI_SAP\REVISED_LOCATIONS\SOILD_MATRIX_SAMPLES_SMELTER.MXD 9/11/2009 14:54:24

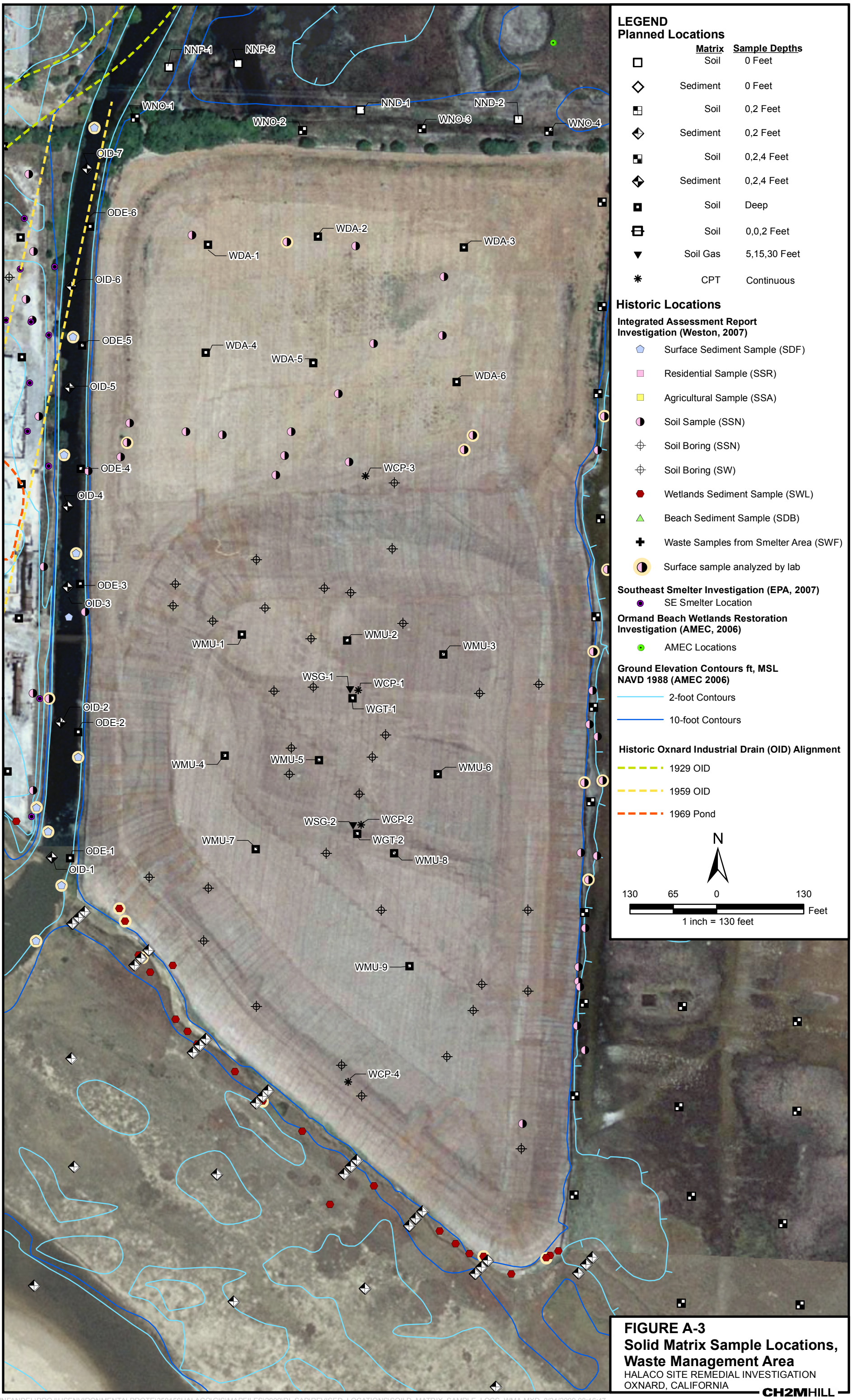

FIGURE A-3
Solid Matrix Sample Locations, Waste Management Area
HALACO SITE REMEDIAL INVESTIGATION
OXNARD, CALIFORNIA

CH2MHILL

BAO \\ZINFANDEL\PROJ\USENVIRONMENTALPROTE\358156HALACO\GIS\MAPFILES\2009\RI_SAP\REVISED_LOCATIONS\SOILD_MATRIX_SAMPLE_LOCS_WMA.MXD 8/24/2009 08:16:47

LEGEND

Planned Locations

	Matrix	Sample Depths
□	Soil	0 Feet
◇	Sediment	0 Feet
	Soil	0,2 Feet
	Sediment	0,2 Feet
	Soil	0,2,4 Feet
	Sediment	0,2,4 Feet
	Soil	Deep
	Soil	0,0,2 Feet

Historic Locations

Integrated Assessment Report Investigation (Weston, 2007)

- Surface Sediment Sample (SDF)
- Residential Sample (SSR)
- Agricultural Sample (SSA)
- Soil Sample (SSN)
- Soil Boring (SSN)
- Soil Boring (SW)
- Wetlands Sediment Sample (SWL)
- Beach Sediment Sample (SDB)
- Waste Samples from Smelter Area (SWF)
- Surface sample analyzed by lab

Southeast Smelter Investigation (EPA, 2007)

- SE Smelter Location

Ormand Beach Wetlands Restoration Investigation (AMEC, 2006)

- AMEC Locations

Ground Elevation Contours ft, MSL NAVD 1988 (AMEC 2006)

- 2-foot Contours
- 10-foot Contours

N

100 50 0 100 Feet

1 inch = 100 feet

FIGURE A-4
Solid Matrix Sample Locations, Ditch South of WMU

HALACO SITE REMEDIAL INVESTIGATION
OXNARD, CALIFORNIA

CH2MHILL

BAO \\ZINFANDEL\PROJ\USENVIRONMENTALPROTE\358156HALACO\GIS\MAPFILES\2009\RI_SAP\REVISED_LOCATIONS\SOILD_MATRIX_SAMPLE_LOCSDITCH.MXD 9/11/2009 16:13:06

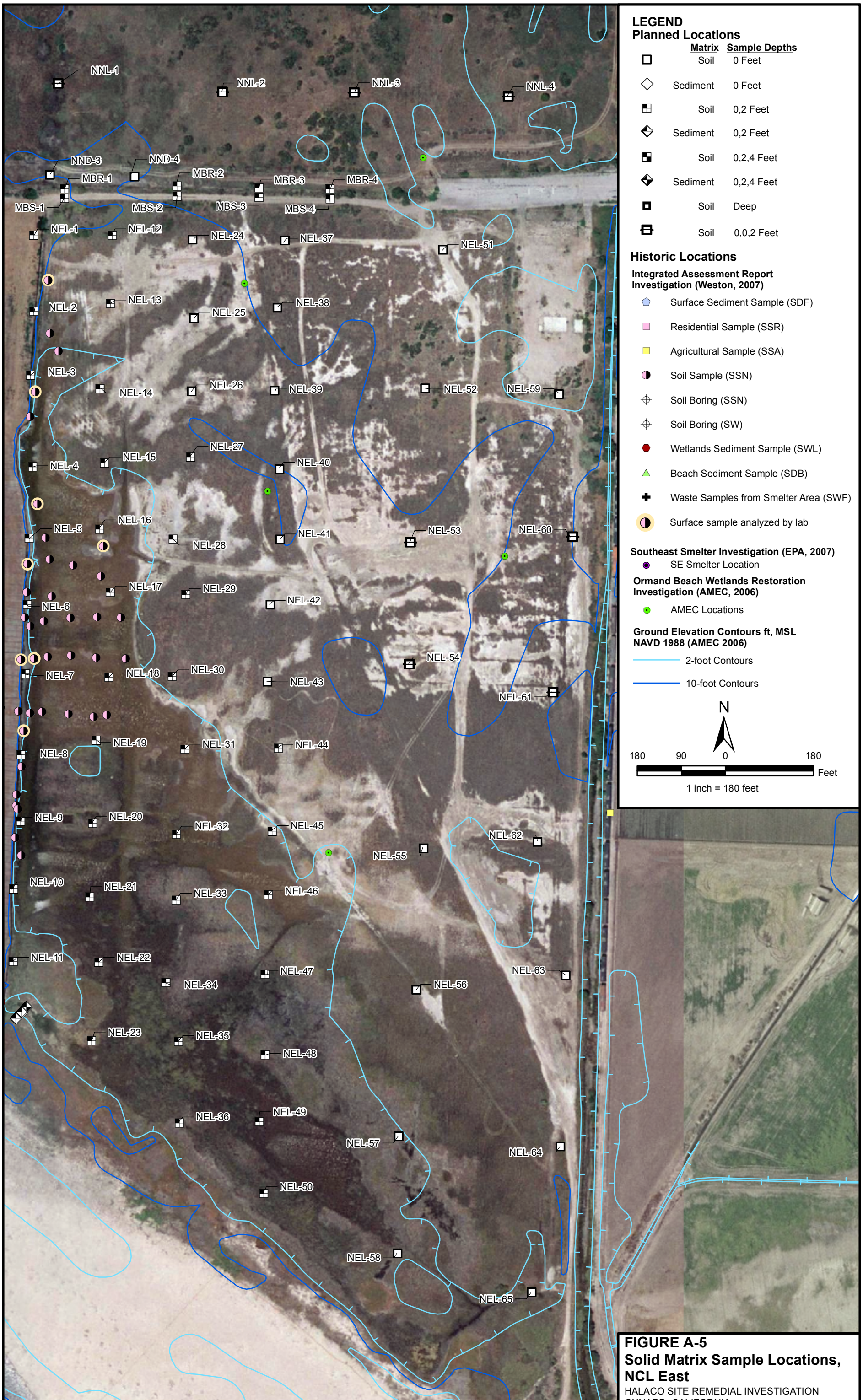

FIGURE A-5
Solid Matrix Sample Locations, NCL East
HALACO SITE REMEDIAL INVESTIGATION
OXNARD, CALIFORNIA

CH2MHILL

BAO \\ZINFANDEL\PROJ\USENVIRONMENTALPROTE\358156HALACO\GIS\MAPFILES\2009\RI_SAP\REVISED_LOCATIONS\SOILD_MATRIX_SAMPLE_LOCS_NCL_EAST.MXD 9/10/2009 14:25:16

LEGEND

Planned Locations

	Matrix	Sample Depths
□	Soil	0 Feet
◇	Sediment	0 Feet
◪	Soil	0,2 Feet
◆	Sediment	0,2 Feet
◪	Soil	0,2,4 Feet
◆	Sediment	0,2,4 Feet
◘	Soil	Deep
⊟	Soil	0,0,2 Feet

Historic Locations

Integrated Assessment Report Investigation (Weston, 2007)

- Surface Sediment Sample (SDF)
- Residential Sample (SSR)
- Agricultural Sample (SSA)
- Soil Sample (SSN)
- Soil Boring (SSN)
- Soil Boring (SW)
- Wetlands Sediment Sample (SWL)
- Beach Sediment Sample (SDB)
- Waste Samples from Smelter Area (SWF)
- Surface sample analyzed by lab

Southeast Smelter Investigation (EPA, 2007)

- SE Smelter Location

Ormand Beach Wetlands Restoration Investigation (AMEC, 2006)

- AMEC Locations

Ground Elevation Contours ft, MSL NAVD 1988 (AMEC 2006)

- 2-foot Contours
- 10-foot Contours

N

200 100 0 200 Feet

1 inch = 250 feet

FIGURE A-6
Solid Matrix Sample Locations, NCL North

HALACO SITE REMEDIAL INVESTIGATION
OXNARD, CALIFORNIA

CH2MHILL

BAO \\ZINFANDEL\PROJ\USENVIRONMENTALPROTE\358156HALACO\GIS\MAPFILES\2009\RI_SAP\REVISED_LOCATIONS\SOILD_MATRIX_SAMPLE_LOCSNORTH.MXD 9/10/2009 14:15:06

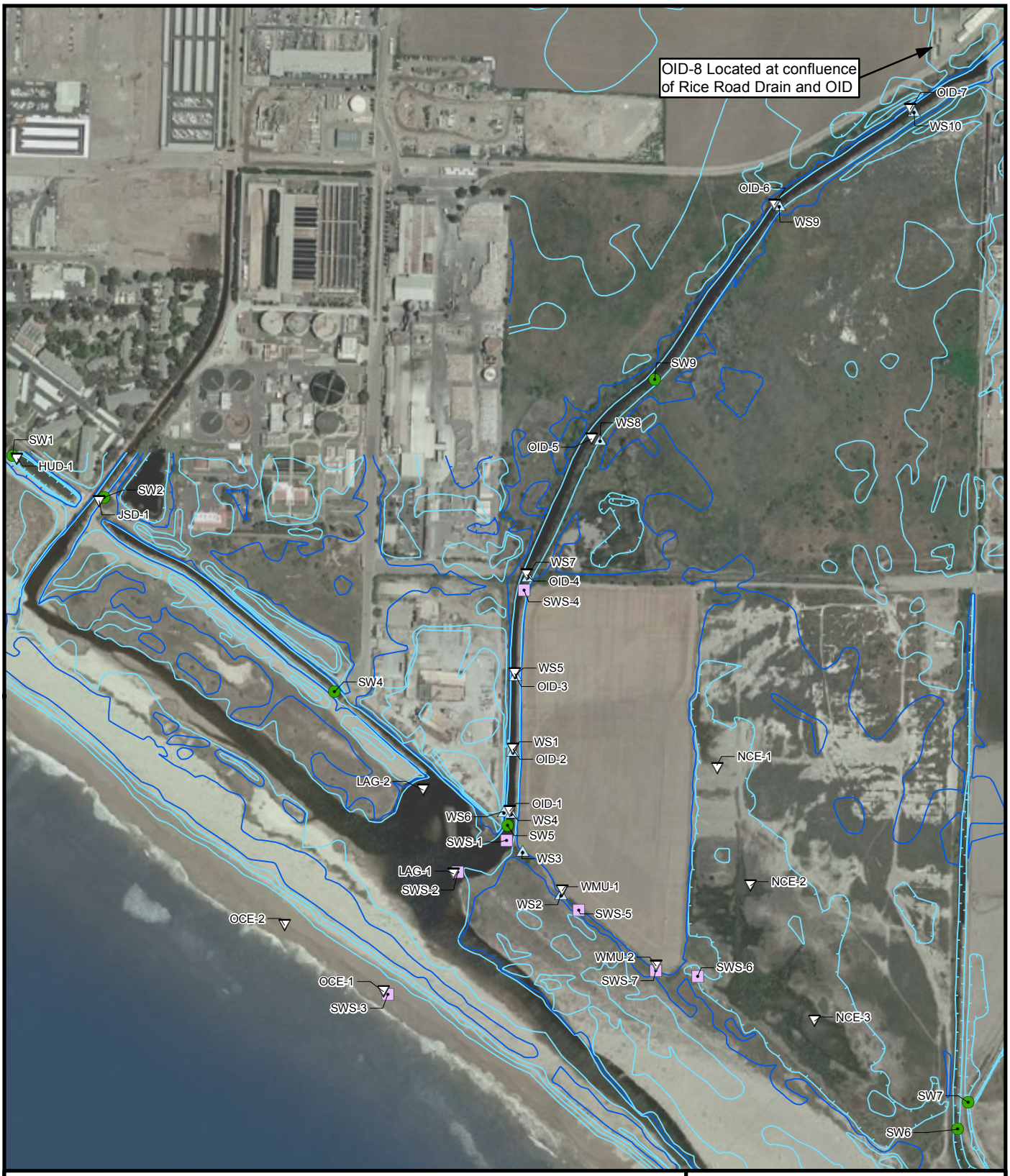

LEGEND

- Planned Surface Water Sample Locations
- Ormond Beach Regional Investigation (AMEC 2006)
- Halaco Routine Monitoring
- Site Integrated Assessment (Weston 2007)

Ground Elevation Contours ft MSL, (AMEC 2006)

- 2-foot Contours
- 10-foot Contours

N

0 300 600 1,200 Feet

1 inch = 600 feet

FIGURE A-7
Surface Water Sampling Locations

HALACO SITE REMEDIAL INVESTIGATION
OXNARD, CALIFORNIA

CH2MHILL

BAO \\ZINFANDEL\PROJ\USENVIRONMENTALPROTE\358156HALACO\GIS\MAPFILES\2009\RI_SAP\REVISED_LOCATIONS\SURFACE_WATER_LOCS.MXD 9/10/2009 14:58:11

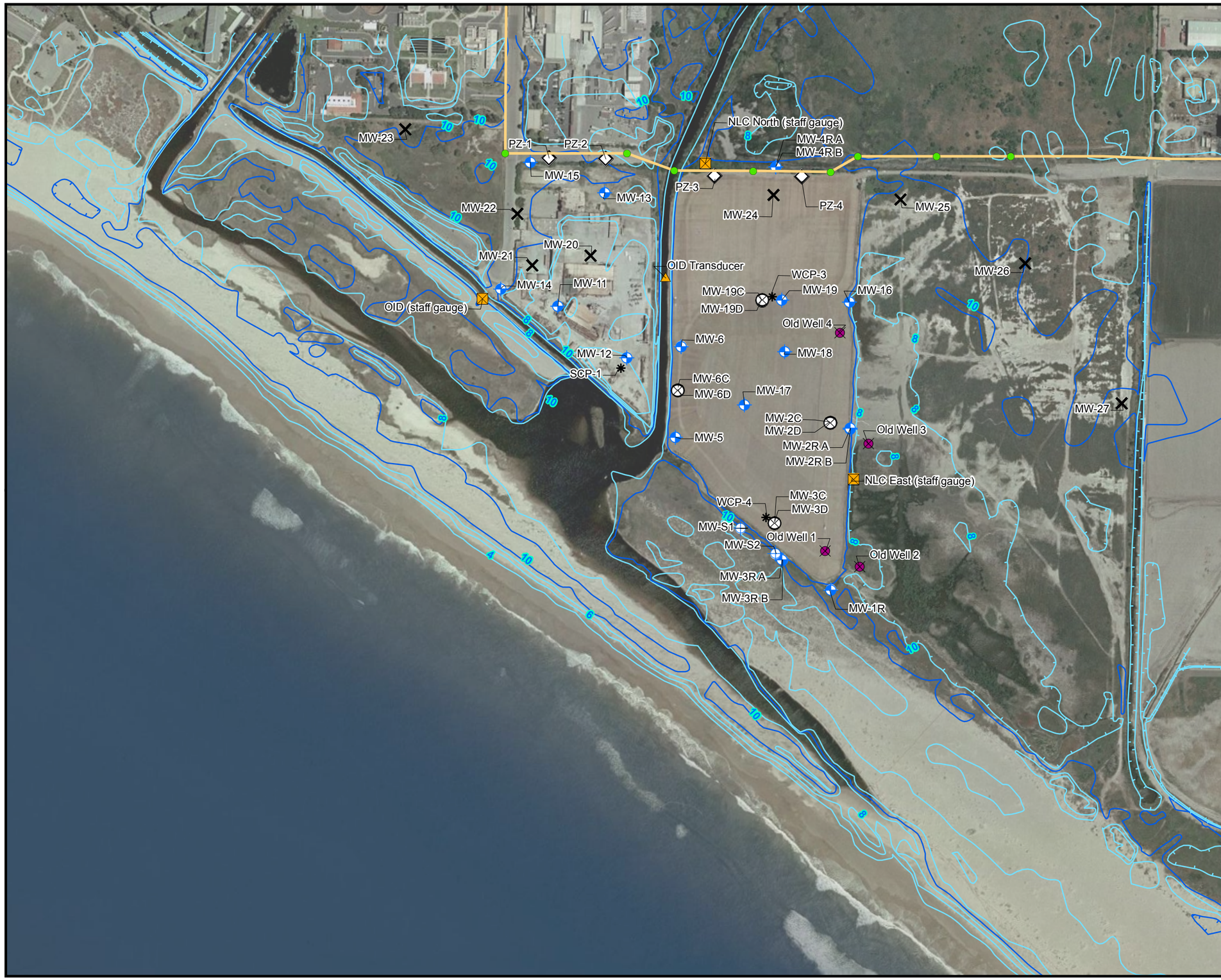

LEGEND

Planned Locations

- Deep CPT Boring
- Piezometer Cluster, water level
- Deeper Well, water quality
- Shallow Well, water quality

Existing Locations

- Ground Water Monitoring Well
- Surface Water Pressure Transducer
- Shallow Groundwater Sampling Locations
- Former Monitoring Well (destroyed)
- Surface Water Gauging Station

Sewer Line

- Oxnard Sewer Trunk Line
- Manhole

Ground Elevation Contours (AMEC, 2006)

- 2-foot Contours
- 10-foot Contours

N

400 200 0 400 Feet

1 inch = 400 feet

Aerial Source: I-cubed 2008.
Datum: WGS 1984

Figure A-8
Groundwater Monitoring Well Locations

HALACO SITE REMEDIAL INVESTIGATION
OXNARD, CALIFORNIA

BAO \\ZINFANDEL\PROJ\USENVIRONMENTALPROTE\358156HALACO\GIS\MAPFILES\2009\RI_SAP\MONITOIRINGWELLSLOCMAP.MXD 3/19/2009 14:44:11

LEGEND

Planned Samples

◇ Air Samples

Historic Samples

⊠ Air Samples

Ground Elevation Contours ft, MSL NAVD 1988 (AMEC 2006)

2-foot Contours

10-foot Contours

N

0 125 250 500 Feet

1 inch = 500 feet

FIGURE A-9
AIR SAMPLE LOCATIONS

HALACO SITE REMEDIAL INVESTIGATION
OXNARD, CALIFORNIA

CH2MHILL

BAO \\ZINFANDEL\PROJ\USENVIRONMENTALPROTE\358156HALACO\GIS\MAPFILES\2009\RI_SAP\REVISED_LOCATIONS\AIR_SAMPLE_LOCS.MXD 9/10/2009 14:47:19

LEGEND

Planned Locations

	Matrix	Sample Depths
□	Soil	0 Feet
◇	Sediment	0 Feet
	Soil	0,2 Feet
	Sediment	0,2 Feet
	Soil	0,2,4 Feet
	Sediment	0,2,4 Feet
	Soil	Deep
	Soil	0,0,2 Feet
▽	Soil Gas	5 Feet
▼	Soil Gas	5,15,30 Feet
✸	CPT	Continuous

Historic Locations

Integrated Assessment Report Investigation (Weston, 2007)

- Surface Sediment Sample (SDF)
- Residential Sample (SSR)
- Agricultural Sample (SSA)
- Soil Sample (SSN)
- Soil Boring (SSN)
- Soil Boring (SW)
- Wetlands Sediment Sample (SWL)
- Beach Sediment Sample (SDB)
- Waste Samples from Smelter Area (SWF)
- Surface sample analyzed by lab

Southeast Smelter Investigation (EPA, 2007)

- SE Smelter Location

Ormand Beach Wetlands Restoration Investigation (AMEC, 2006)

- AMEC Locations

Ground Elevation Contours ft, MSL NAVD 1988 (AMEC 2006)

- 2-foot Contours
- 10-foot Contours

Historic Oxnard Industrial Drain (OID) Alignment

- 1929 OID
- 1959 OID
- 1969 Pond

- Visual Inspection Transects

FIGURE A-10
Visual Inspection for Presence of Process Slag Waste
HALACO SITE REMEDIAL INVESTIGATION
OXNARD, CALIFORNIA

CH2MHILL

BAO \\ZINFANDEL\PROJ\USENVIRONMENTALPROTE\358156HALACO\GIS\MAPFILES\2009\RI_SAP\VISUAL_INSPECTION_TRANSECTS.MXD 5/11/2009 11:56:05

SECTION 4

Rationale for Sample Locations, Numbers, and Laboratory Analyses

This section provides the rational for sample locations, number of samples, and laboratory analyses. The sample design is provided below by matrix, area, and subarea. Table 4-1 summarizes the planned RI samples and analyses by matrix, area, and subarea. Table 4-2 provides the total number of planned RI samples by matrix and area (not included quality control samples. Figure 5 depicts the areas recommended for additional sampling shown with past solid matrix sample locations. The sample location maps are in Section 3.

4.1 Solid Matrix (Soil, Sediment, and Waste) and Soil Gas

Soils, sediments, and wastes at much of the Site have been tested for metals contamination. Figures 6a, 6b, and 6c are "bubble plots" depicting the levels of one of the metals (lead) found in waste, soil, and sediment samples collected at the Site between 2006 and 2007. Figures 6a, 6b, and 6c show past field XRF data. The figures show a clear "footprint" of contamination. Separate figures are provided for surface contamination (less than 5 feet deep) and subsurface contamination (5 feet and deeper).

Some areas of the Site have not been adequately tested, some areas have not been tested at adequate depths, and some areas tested for metals have not been tested for other potential contaminants. The following sections provide an area-by-area summary of planned sampling. Analytes and areas requiring additional sampling were identified, in part, by evaluating the *Screening-Level Ecological and Human Health Risk Assessment, Halaco Site* (CH2M HILL, 2008b). For additional discussion of XRF and lab results, see the *Comparison of Metals Concentrations for Solid Matrix Samples Analyzed by Field XRF and Fixed Laboratory Methods for the 2006 Integrated Assessment, Halaco Site* (CH2M HILL, 2009). For a tabular summary of sampling results and more than 70 box plots comparing the sampling results in each area to background and screening levels, see CH2M HILL (2008b). One of the box plots, for copper in soil and sediment, is included as Figure 7.

4.1.1 Smelter Area Soils

Smelter Area Soils – North Area

The North Area was used for material and equipment storage, and for temporary impoundment of surface water runoff pumped from the smelter area (URS, 2004). Historical aerial photos show that a portion of the OID channel formerly passed though the eastern part of this area. One-quarter of the 12 soil samples (at nine locations) in this area exceeded the human health risk screening level for lead in soils in industrial areas (800 milligrams per kilogram). Almost one-half of the sampling locations exceeded (the lower) screening levels for residential land use (150 milligrams per kilogram). Locations exceeding the arsenic screening level are not counted because samples from background locations also exceeded

the screening level. Some sampling locations also had elevated levels of thorium and/or radium.

A limited number of additional shallow and deeper samples will be collected to determine whether the extent and levels of shallow contamination in the North Area pose a health risk that warrants cleanup. The shallow sampling will be performed to assess surface water runoff from the smelter area. The deeper sampling will be performed to assess wastes remaining from the former Oxnard dump and the extent to which wastes are in contact with groundwater. The following samples will be collected:

- Shallow soil samples will be collected at 10 locations throughout the North Area from 0 and 2 feet bgs and analyzed for metals and radionuclides. 25 percent of samples will be analyzed for VOCs, SVOCs, and TPH to check for the potential presence of organic compounds.
- Shallow and deeper soil samples will be collected and analyzed for metals and radionuclides at 2 locations at the east edge of the North Area, from ground surface at 5-foot depth intervals until native soils are encountered. One sample of native soil will be analyzed at a depth of 5 feet below the bottom of waste fill. Wastes from the former Oxnard dump above native soil will be analyzed, if encountered, to assess their potential impact in comparison to waste from the former Halaco activities. 25 percent of samples will be analyzed for VOCs, SVOCs, and TPH to check for the potential presence of organic compounds.

Smelter Area Soils – Parking Area

The Parking Area was used primarily for vehicle parking and is entirely paved. In the one soil sample collected in this area, the concentration of lead exceeded background levels but did not exceed human health risk screening levels for industrial or residential land use. Radionuclides in the sample were at background levels.

A limited number of additional samples will be collected to determine whether the levels of contamination in the Parking Area pose a health risk that warrants cleanup. The following samples will be collected:

- Shallow soil samples will be collected and analyzed for metals and radionuclides at 4 locations throughout the Parking Area from 0 and 2 feet bgs (starting below the asphalt and sub grade aggregate). 50 percent of these samples will be analyzed for VOCs, SVOCs, and TPH to check for the potential presence of organic compounds.

Smelter Area Soils – Process Building Area and Southeast Area

The Process Building Area was the location of most of Halaco's operations, including the rotary furnaces used for smelting, storage of raw materials and wastes, equipment storage and maintenance, and fuel and oil storage in above-ground and underground tanks. Historical aerial photos show that a portion of the OID channel formerly passed though this area. One soil sample collected from this area and analyzed at an offsite laboratory exceeded the industrial use screening level for lead. One other sampling location analyzed by XRF also exceeded the industrial use screening level for lead. Four other locations exceeded a residential use screening level. The one sample analyzed for thorium did not exceed background levels.

The Southeast Area was a disposal location for Halaco's waste solids from approximately 1965 to 1970. The wastes were discharged to a settling pond adjacent to the OID, and waste solids were used as fill in the southeastern portion of the smelter area. The waste depth varies, reaching about 12 feet at the southern end of this area. Historical aerial photos show that a portion of the OID channel formerly passed though this area. About one-third of the approximately 16 soil sampling locations in this area analyzed at an offsite lab exceeded screening levels for industrial land use (not counting arsenic). Similar results were found in another six locations analyzed by XRF. Samples from most locations tested at the offsite lab had elevated radionuclides.

Soil Chemical Sampling

Additional testing will be performed to evaluate the area for metals, radionuclides, and other potential contaminants (VOCs, SVOCs, TPH, PCBs, dioxins, and furans), determine the vertical extent of waste and contamination from Halaco's operations, determine the nature and extent of wastes remaining from the former Oxnard dump, and determine the extent to which wastes are in contact with groundwater. Current and former tank locations will be targeted (Figure 8). The following samples will be collected:

- Shallow and deeper soil samples will be collected and analyzed for metals and radionuclides at 27 locations throughout the process building and southeast area, from ground surface at 5-foot depth intervals until native soils are encountered. One sample of native soil will be analyzed at a depth of 5 feet below the bottom of waste fill. Wastes from the former Oxnard dump above native soil will be analyzed, if encountered, to assess their potential impact in comparison to waste from the former Halaco activities. 50 percent of these samples will be analyzed for VOCs, SVOCs, and TPH to check for the potential presence of organic compounds. 25 percent of the samples will be analyzed for PCBs and dioxins.

Soil Gas Chemical Sampling

A limited number of shallow soil gas samples will be collected and analyzed for (1) VOCs, ammonia, and other gases (hydrogen, acetylene, carbon monoxide) that may be produced by reactivity of Halaco's waste materials and (2) VOCs and other landfill gases (methane, hydrogen sulfide, carbon dioxide, and oxygen) to determine whether wastes remaining from the former Halaco operations or Oxnard dump are generating gas. The shallow samples will be collected from a depth of 5 feet bgs, above the water table which ranges from 5 to 10 feet bgs in this area. The following samples will be collected:

- Shallow soil gas samples will be collected at 3 locations in the process building area where waste from former Halaco operations and the Oxnard dump are co-located. These samples will be located in the vicinity of the 1929 OID alignment, which was before site development, according to historical aerial photographs.

- Shallow soil gas samples will be collected at 3 locations in the southeast area where only waste from former Halaco operations exists. These samples will be located east of the 1959 OID alignment, which marked the eastern extent of Oxnard dump fill, according to historical aerial photographs.

Geotechnical Sampling

A limited number of CPT borings and geotechnical samples will be collected to evaluate subsurface stratigraphy and physical properties in areas where the presence of subsurface Halaco or Oxnard dump wastes might result in settlement. These data will be used to characterize site conditions and evaluate remedial options that would involve excavation, capping, or other construction activities. The following CPT borings and geotechnical samples will be collected:

- CPT borings will be performed at 2 locations, one in the process building area (were waste from former Halaco operations and the Oxnard dump are co-located) and one in the southeast area were only waste from former Halaco operations exists. The CPT in the process building are will be pushed to 25 feet bgs, approximately 5 to 10 feet into native soils. The CPT in the southeast area will be pushed to 160 feet bgs to complement the two deep CPTs to be pushed to this depth at the north and south edge of the WMU (see groundwater investigation). These three deep CPTs will be pushed before the deeper Semi-perched Aquifer groundwater monitoring wells are installed to help design these wells as described below.
- Geotechnical samples will be collected next to the CPT borings at 5 and 10 feet bgs, and 5 feet into native soils. These samples will be analyzed for grain size gradation, atterberg limits, moisture, density, modified proctor, and direct shear strength.

4.1.2 Waste Management Area

Waste Management Unit

The WMU was the disposal location for most or all of Halaco's wastes from about 1970 to 2002. In addition to process wastes from the smelting operation, the WMU received wastes from the air pollution control equipment, and may have been a disposal location for waste oil (DTSC, 2000). In more than one-half of the approximately 36 locations tested in 2006 at an offsite lab in this area, one or more metals were elevated above screening levels for industrial land use (not counting arsenic). Samples were collected from depths of 5 to 20 feet, and most of the exceedances were for aluminum and/or chromium. Similar results were found in another 132 samples analyzed by XRF. Two locations tested in 2006 had elevated radionuclides at depths of 15 feet or greater. Similar results were found in a 2002 study, with elevated levels of thorium in samples at depths of 25 feet or greater. The deeper wastes are most likely the oldest wastes, produced in the 1960s or 1970s when Halaco reports processing radioactive thorium-containing alloys. VOCs were also analyzed for in approximately 10 samples from the WMU in 2006, but infrequently detected and at concentrations below risk screening levels. When Halaco was operating, ammonia was measured in liquids seeping from the WMU at concentrations up to approximately 1,000 ppm.

Soil Chemical Sampling

Additional investigation will be performed to determine the depth of the waste material, the extent to which there is contact between the waste and surface water in the OID, and the extent to which there is contact between the waste and groundwater. The investigation will include retrieval of core samples until native material is reached.

Additional samples will be collected for analysis of metals and radionuclides to determine the levels of contamination in the bottom 20 feet of the WMU, which has not been characterized. A portion of the samples also will be analyzed for other organics not previously analyzed. Surface and shallow (5 feet) samples will be analyzed for metals and other organics to complete the human health risk assessment. The following shallow and deeper samples will be collected and analyzed at 9 locations throughout the WMU:

- **Shallow Samples –** Two waste samples (surface and 5 feet bgs) will be analyzed at each location for VOCs, SVOCs, TPH, PCBs, and dioxins to check for the potential presence of organic compounds. These samples will also be analyzed for metals.
- **Deeper Samples –** Two waste samples (30 and 35 feet bgs) and 1 native soil sample (5 feet below bottom of waste) will be analyzed at each location for metals and radionuclides. 50 percent of samples will be analyzed for VOCs, SVOCs, and TPH to check for the potential presence of organic compounds. Twenty-five percent of the samples will be analyzed for PCBs and dioxins.

Soil Gas Chemical Sampling

A limited number of shallow soil gas samples will be collected and analyzed for ammonia and other gases to help evaluate the current and future reactivity of the waste materials. The following samples will be collected:

- Shallow and deep soil gas samples will be collected at 2 locations from 3 depths at each location: 5, 15, 30 feet bgs. The samples will be analyzed for VOCs, ammonia, and other gases (hydrogen, acetylene, carbon monoxide, methane, carbon dioxide, oxygen). Hydrogen sulfide will not be analyzed because Oxnard dump materials are not present.

Geotechnical Sampling

A limited number of CPT borings and geotechnical samples will be collected to evaluate subsurface stratigraphy and physical properties to evaluate the permeability and strengths of the process wastes and native soils underlying the WMU. Measurements of the physical properties of the waste will be made to characterize subsurface conditions, better estimate the downward movement of precipitation through the WMU, estimate the likelihood of future settlement of the waste materials, and evaluate remedial options that would involve excavation, capping, or other construction activities. The following CPT borings and geotechnical samples will be collected:

- CPT borings will be performed at 4 locations, 2 on top of the WMU and 2 on the north and south edges of the WMU. The CPTs on top of the WMU will be pushed to 50 feet bgs, approximately 5 feet into native soils. The CPTs on the north and south edges of the WMU will be pushed to 160 feet bgs to complement the one deep CPT to be pushed to this depth at the Smelter Parcel. These three deep CPTs will be pushed before the deeper Semi-perched Aquifer groundwater monitoring wells are installed to help design these wells as described below.
- Geotechnical samples will be collected next to the 2 CPT borings on top of the WMU. Samples will be collected from the waste material 10, 20, and 30 feet bgs and analyzed for grain size gradation, atterberg limits, moisture, density, modified proctor, and direct shear strength.

Waste Disposal Area

The WDA is the final disposal location for some of Halaco's wastes, which were initially discharged to the WMU and then moved to the WDA. Wastes were placed in the WDA beginning in or before 1980. Sampling to date in the WDA has mostly characterized metals and radionuclides in surface samples. In a few cases, samples were collected from the subsurface to a maximum depth of 8 feet. More than one-half of the five locations previously sampled in this area for laboratory analysis exceeded screening levels for industrial land use (for aluminum, beryllium, or chromium). Similar results were found in another 22 samples analyzed by XRF. The levels of radionuclides were also elevated in two of the five sampling locations.

Additional investigation will be performed to determine the depth of waste material, determine whether the levels of contamination vary with depth, and confirm the northern limit of waste materials.

- Shallow and deeper samples will be collected at 6 locations throughout the WDA as follows:
  - **Shallow Samples –** Two waste samples (surface and 5 feet bgs) will be analyzed at each location for VOCs, SVOCs, TPH, PCBs, and dioxins to check for the potential presence of organic compounds. The samples will also be analyzed for metals.
  - **Deeper Samples –** The shallow 5-foot bgs waste sample and 1 native soil sample (5 feet below bottom of waste) will be analyzed at each location for metals and radionuclides.
- Shallow soil samples will be collected at 4 locations immediately north of the WDA from 0 and 2 feet bgs for analysis of metals and radionuclides to confirm the northern extent of waste.

East Bank of the OID

Surface and subsurface samples collected on the west bank of the OID (Smelter Parcel) indicate that it is comprised of waste from Halaco's operations. Similar samples are not available for the east bank (Waste Management Area).

Additional investigation will be performed to evaluate the area for metals and radionuclides, determine the composition of the surface and subsurface materials on the east bank of the OID, the vertical extent of fill materials, and determine the extent to which fill is in contact with groundwater. The following samples will be collected:

- Shallow and deeper soil samples will be collected and analyzed for metals and radionuclides at 6 locations along the east bank of the OID, from ground surface at 5-foot depth intervals until native soils are encountered. One sample of native soil will be analyzed at a depth of 5 feet below the bottom of waste fill.

4.1.3 Nature Conservancy Land Soils and Sediments – East

A portion of the NCL-East adjacent to the WMU has been contaminated by erosion of waste material from the WMU, and possibly by seepage during the period that Halaco used the WMU as a settling pond for its wastewater. Sampling in the NCL-East has confirmed the

presence of Halaco's waste adjacent to the waste pile at concentrations exceeding ecological screening levels (Figure 6b). Ground surface slopes from northeast-to-southwest and it is likely that eroded waste material from the WMU is present in the lower elevation areas.

Additional investigations, including visual observation and the collection and analysis of soil and sediment samples, will be collected to determine the vertical and horizontal extent of contamination. The following samples will be collected to be collected and analyzed for metals and radionuclides:

- Shallow soil samples will be collected at 40 locations at 150- to 200-foot spacing next to the WMU, inside and within the immediate vicinity of the 8-foot elevation contour. Samples will be collected at 0 and 2 feet bgs for analysis.
- Shallow soil samples will be collected at 21 locations at a 200- to 300-foot spacing from the east edge of the above 40 locations eastward to the eastern edge of NCL-East. Sample spacing will increase from west-to-east. Samples will be collected at ground surface for analysis.
- Additional samples will be collected at 4 locations to assess the potential for shallow soil contamination from wind-born deposition of waste from the waste management area or from process air emissions from historical Halaco smelter operations. Samples will be collected from 0.0 to 0.1 feet, 0.1 to 0.5 feet, and 2 feet bgs for analysis.

4.1.4 Nature Conservancy Land Soils and Sediments – North

Samples have been collected at four locations in the NCL-North area as part of the regional Ormond Beach Restoration project. Analysis of these samples has not detected contamination from Halaco's operations.

A limited number of additional samples will be collected to confirm that this area is not contaminated. The following samples will be collected to be collected and analyzed for metals and radionuclides:

- Surface soil samples will be collected at 2 locations in the small pond at the northwest corner of the WDA and at 4 locations in the ditch immediatley north of the WDA to assess potential stormwater runoff.
- Shallow soil samples will be at 4 locations to the north of NCL-East to assess the potential for shallow soil contamination from wind-born deposition of waste from the waste management area or from process air emissions from historical Halaco smelter operations. Samples will be collected from 0.0 to 0.1 feet, 0.1 to 0.5 feet, and 2 feet bgs for analysis.

4.1.5 Hueneme Parcel Soils

Samples were collected from the triangular Hueneme Parcel west of the smelter to represent background soil conditions for the Integrated Assessment. **A limited number of additional samples will be collected to confirm that this area is not contaminated. The following samples will be collected to be collected and analyzed for metals and radionuclides:**

- Shallow soil samples will be collected at 4 locations to assess the potential for shallow soil contamination from process air emissions from historical Halaco smelter operations. Samples will be collected from 0.0 to 0.1 feet, 0.1 to 0.5 feet, and 2 feet bgs for analysis.

4.1.6 Oxnard Industrial Drain and Lagoon Sediments

Halaco discharged waste to the OID from about 1965 to 1970. Some of the discharged wastes and wastes eroded from the Site since 1970 have moved into the downstream lagoon. Six of the seven sediment samples collected from the OID adjacent to the waste management area and analyzed in an offsite laboratory exceeded background levels and ecological screening levels for metals. Several metals were found at elevated concentrations, including aluminum, barium, beryllium, cadmium, chromium, copper, lead, magnesium, nickel, and zinc.

The alignment of the OID and configuration of the lagoon changed over time, as shown in the historical aerial photographs from 1929 through 1991 (Lockheed, 1982, 1991). The OID alignment before any site development began is shown on the 1929 aerial photo, the alignment towards the end of Oxnard dump waste disposal activities and before Halaco operations is shown on the 1959 aerial photo, and the alignment during Halaco's direct waste discharge into a small pond in the former OID alignment is shown on the 1969 aerial photo (Lockheed, 1982). Prior to 1992, Ventura County manually breached the beach berm near the mouth of the J Street Drain to minimize upstream flooding of developed areas. Thereafter, the beach berm periodically breached naturally and the breach location(s) shifted south to the current breach location at the southeast part of the lagoon (Figure 5).

Sediment Chemical Sampling

Additional samples will be collected to determine the horizontal and vertical extent of sediment contamination and to evaluate the area for analytes other than metals and radionuclides (VOCs, SVOCs, TPH, PCBs, and dioxins). The following samples will be collected:

- Shallow sediment samples will be collected at the bottom of the OID through the Site from 7 locations. Samples will be collected from 0, 2, and 4 feet bgs and analyzed for metals and radionuclides. 50 percent of samples will be analyzed for VOCs, SVOCs, TPH, PCBs, and dioxins to check for the potential presence of organic compounds.
- Shallow sediment samples will be collected at the bottom of the OID north of the Site from 7 locations. Samples will be collected from 0 and 2 feet bgs and analyzed for metals and radionuclides. 50 percent of samples will be analyzed for VOCs, SVOCs, TPH, PCBs, and dioxins to check for the potential presence of organic compounds. Contamination from the Halaco site may move north when the beach berm is breached and the incoming tide causes surface water to move north toward the Hueneme Road bridge.
- Shallow sediment samples will be collected at the bottom of the main lagoon from 10 locations. Samples will be collected from 0, 2, and 4 feet bgs and analyzed for metals and radionuclides. 50 percent of these samples will be analyzed for VOCs, SVOCs, TPH, PCBs, and dioxins to check for the potential presence of organic compounds.

- Shallow sediment samples will be collected from 12 locations from the fingers extending northwest and southeast from the main lagoon. Samples will be collected from 0 and 2 feet bgs and analyzed for metals and radionuclides. 50 percent of these samples will be analyzed for VOCs, SVOCs, TPH, PCBs, and dioxins to check for the potential presence of organic compounds.

Geotechnical Sampling

A limited number of geotechnical samples will be collected to evaluate physical properties of the main lagoon sediments to evaluate remedial options that would involve excavation (dredging) or other construction activities. The following geotechnical samples will be collected:

- Shallow sediment samples will be collected at the bottom of the main lagoon from 4 locations. One composite sample will be collected from each location from 0 to 2 feet bgs and analyzed for grain size distribution and atterberg limits.

4.1.7 Loading Dock Soils

Halaco used a railroad loading dock approximately one-half mile north of the smelter parcel to receive and ship materials. The area has not been sampled.

Limited sampling will be performed, recognizing that others used the same loading dock and it may be difficult to determine the source of elevated levels of metals or other constituents, if detected. The following samples will be collected:

- Shallow soil samples will be collected around the loading dock from 6 locations. Samples will be collected from surface and analyzed for metals and radionuclides.

4.1.8 McWane Boulevard Soils – North of NCL East

There are reports that Halaco waste material is present along an unpaved extension of McWane Blvd north of the NCL East. A visual inspection of the area on June 21, 2008, identified scattered pieces of waste on the surface.

Visual inspection of the surface and shallow subsurface will be performed, along with a limited number of samples, to determine whether significant contamination is present in this area. The following will be collected:

- Visual observation will include a systematic slow walk along the dirt road and the immediate area to the south of the road. A shovel will be used to opportunistically remove near-surface soils to visually inspect to a limited depth below ground surface.

- Shallow soil samples will be collected along the dirt road from 8 locations. 4 of the samples will be collected within the road and 4 of the samples will be collected immediatley south of the road. Samples will be collected from 0 and 2 feet bgs from surface and analyzed for metals and radionuclides. Discrete, obvious areas of process slag waste will not be excluded from the samples, but will be included if present at the sample location.

4.1.9 Wetland Area Sediments

Wetland Area Sediments – South and West of Smelter Area

In March 2007, EPA removed approximately 7,600 cubic yards of Halaco waste mixed with soil and sand from a wetlands area south and west of the smelter area. The area was re-vegetated after removal. A visual inspection of the area on June 21, 2008, and limited sampling outside of the removal area has identified small, isolated pieces of waste in the area.

Visual inspection of the surface and shallow subsurface will be performed, along with a limited number of samples, to determine whether significant contamination is present in this area. The following will be collected:

- Visual observation will include a systematic slow walk along the March 2007 removal area and the rest of the wetland area between the J Street Drain and the main lagoon area. A shovel will be used to opportunistically remove near-surface soil and sand to visually inspect to a limited depth below ground surface.
- Shallow soil samples will be collected along the March 2007 removal area from 6 locations and the remainder of the wetlands area from an additional 6 locations. Samples will be collected from 0 and 2 feet bgs and analyzed for metals and radionuclides. Discrete, obvious areas of smelter slag waste will not be excluded from the samples, but will be included, if present at the sample location.

Wetland Area Sediments – Ditch South of Waste Management Unit

In five of six sediment samples collected in the ditch south of the WMU and analyzed in an offsite lab, one or more metals were detected above screening levels for industrial land use (not counting arsenic). The levels of radionuclides were also elevated in one sample.

Additional investigation will be performed to determine the depth of waste material and the lateral and vertical extent of contamination in this area. The following samples will be collected:

- Shallow soil samples will be collected along the bottom of the ditch at 8 locations from 0, 2, and 4 feet bgs. At each of these locations, additional samples will be collected south of the ditch at 2 step-out distances of 5 feet and 15 feet. Samples will be collected at the step-out locations from 0 and 2 feet bgs. Samples will be analyzed for metals and radionuclides.

Wetland Area Sediments – South of Waste Management Unit

No samples have been collected in the wetland area south of the WMU.

Visual inspection of the surface and shallow subsurface will be performed, along with a limited number of samples, to determine whether significant contamination is present in this area. The following will be collected:

- Visual observation will include a systematic slow walk in the area encompassed to the north by ditch south of the WMU, to the west by the OID main channel, to the south by a finger of the OID, and to the west by the southward extension of the eastern site

boundary of the WMU. A shovel will be used to opportunistically remove near-surface soil and sand to visually inspect to a limited depth below ground surface.

- Shallow soil samples will be collected from 8 locations from 0 and 2 feet bgs and analyzed for metals and radionuclides. Discrete, obvious areas of smelter slag waste will not be excluded from the samples, but will be included, if present at the sample location.

4.1.10 Beach Dunes and Sediments

The beach dunes and sediments located between the lagoon and ocean prevent surface water and sediment in the OID and lagoon from discharging to the ocean for much of the year. Periodically, the dunes are breached and potentially contaminated surface water and sediment discharge to the ocean. None of the results for the six samples collected from the beach dunes and analyzed at an offsite laboratory exceed human health screening levels for metals (not counting arsenic), but four of the six samples exceeded ecological risk screening levels for cadmium and/or mercury and appeared to exceed background levels. One sample may have elevated levels of thorium.

Additional sampling will be performed to determine whether the elevated levels in beach sands are Site-related and determine whether the levels pose any health risk. As described above for the OID and lagoon sediments, the location of the periodic beach berm breach shifted southward from the J Street Drain to the current breach location at the southeast part of the lagoon after Ventura County stopped manually breaching the berm in 1992. Two historical channels from the OID through the beach dunes will be targeted during sampling. The first is a historical breach visible on the 1971 aerial photo near where the OID currently enters the lagoon. The second is the current breach location at the southeast part of the lagoon visible on Figure 5.

The following will be collected:

- Subsurface beach sediments will be collected at two breach areas, one inactive and one active. The active breach area is to the south of the main lagoon and an inactive breach area is next to the main lagoon. Samples will be collected at 3 locations parallel to the ocean at each of these two breach areas. At each of the 6 locations, samples will be collected at 0, 2, 4, and 6 feet elevation, the range of tidal fluctuations. Sample depths will be adjusted to preferentially sample intervals that visually appear to contain smelter waste, if any. The subsurface soil samples will be analyzed for metals and radionuclides.

4.1.11 Additional Background Samples

Six samples were collected in areas representing upgradient or background conditions and analyzed in an offsite lab for metals and radionuclides for each of the following areas: marine, beach, wetlands, soil, OID.

Additional background sampling will be performed to better characterize chemical concentrations in unimpacted areas. Collection of additional background samples will allow better estimates of the upper bound of unimpacted soils or sediments, such as the upper 95th percentile. Additional surface background samples will be collected from 6 locations in each of the following areas: beach dunes and sediments, wetlands sediments, and soils. The 2-foot depth OID sediment samples collected north of the Site (discussed above) may be used for additional OID sediment background samples because they are

less likely to be affected than surface sediment samples. Surface sediment OID sediment samples may more likely be impacted by the Site because the OID may flow north when the beach berm is breached and seawater moves inland with the rising tide. It is more likely that the 2-foot samples will not be potentially impacted. The following additional sampling will be performed:

- The additional beach dunes and sediments background samples will be collected at 6 surface locations along the ocean, northwest of the J Street drain, similar to the location of the current background samples. However, the additional samples will be collected further inland than the current background samples to incorporate spatial variability. The background concentrations of the current 6 locations at the shoreline may be different from those further inland, potentially leading to spatial variability.
- The additional wetlands background samples will be collected at 6 surface locations, northwest of the J Street drain to incorporate spatial variability. The current background samples are located to the southeast of the J Street drain.
- The additional soils background samples will be collected at 6 surface locations in NCL-North, west of the OID, to incorporate spatial variability. The current background samples are located in the center of the Hueneme Parcel.

4.2 Groundwater

The earliest known groundwater testing at the Site occurred in 1970. Currently, 18 groundwater monitoring wells are intact and usable. All 18 are screened in the upper 10 to 30 feet of the semiperched zone aquifer underlying the Site. There are no wells onsite in the deeper portion of the semiperched zone (which is estimated to extend to a depth of about 50 to 150 feet bgs) or in the underlying Oxnard aquifer. Fourteen of the 18 monitoring wells were sampled and analyzed for total metals, radionuclides, and VOCs once in 2006 for the Integrated Assessment. Figure 9 shows well locations.

Nine wells were sampled quarterly in 2003 and 2004. An earlier network of three to four wells was sampled twice per year from 1981 through 2003, when they were destroyed. Analytical parameters varied, but included EC, pH, oil and grease, magnesium, and selected metals (aluminum, copper, zinc) from 1981 to 2002 and additional parameters between 2003 and 2004. The expanded list of parameters included additional metals, ammonia, TDS, thorium, radium, and VOCs.

Monitoring data show that Halaco's wastes have contaminated shallow groundwater at the Site, at least to the depth of the current groundwater monitoring wells. The wells are screened to a depth of approximately -10 feet elevation in the smelter area and -20 feet elevation in the waste management area. Monitoring data have shown elevated levels of several parameters associated with Halaco's wastes in selected wells, including TDS, EC, pH, magnesium and other metals, ammonia, and oil and grease. Monitoring data also show relatively high levels of potassium and low levels of sulfate in wells near waste disposal areas, consistent with the composition of Halaco's wastewater.

The horizontal extent of contamination and the vertical extent of contamination below the existing well network are not known. When Halaco discharged wastewater to the WMU

from about 1970 to 2002, water table "mounding" under the WMU would have resulted in groundwater flowing radially outward from the historical wastewater disposal areas and vertically downward within the Semiperched Aquifer. Until the early 1990s, there were also downward hydraulic gradients between the Semiperched and underlying Oxnard aquifer because of overpumping in the Oxnard aquifer, which lowered groundwater elevations below sea level. It is unknown whether contaminated groundwater in the semiperched zone has moved downward through the underlying aquitard.

Impacts on groundwater continue even though wastewater discharge and mounding no longer occur and local groundwater flow directions changed after wastewater discharges ended in 2002.

Currently, groundwater in the semiperched zone under the Site moves away from surface water recharge areas (lagoon, OID, NCL-East) and generally inland. Figure 9 shows groundwater levels for December 12, 2007. The extraction or removal of groundwater north of the Site also may contribute to northerly gradients across the Site. There is a possibility that groundwater leakage into the City of Oxnard's sanitary sewer trunk line that runs along McWane Blvd is a source of the unusually depressed groundwater elevations at the northern part of the Site.

See the *Preliminary Evaluation of the Sources, Nature, Extent, and Movement of Contamination in Surface Water and Groundwater, Halaco Site* (CH2M HILL, 2008a) for a more detailed discussion of aquifer structure, groundwater elevations and flow, the nature and extent of groundwater contamination at the Site, and summaries of sampling results.

Additional monitoring well installation, groundwater sampling and analysis, piezometer installation, and water level measurements will be collected.

4.2.1 Monitoring Wells

The following will be performed:

- Installation of 8 shallow water table groundwater monitoring wells to assess the horizontal extent of contamination and background conditions. The wells will be constructed with 10-foot-long screens similar to current wells, approximately 0 to -10-feet elevation. The wells will be constructed with 2-inch diameter PVC. The wells will be located with the following objectives:
    - MW-20 – Assess potential contamination from former smelter building operations
    - MW-21 – Assess potential contamination from former and current oil/fuel tanks
    - MW-22 – Assess potential offsite contaminant migration from smelter area
    - MW-23 – Assess offsite and potential background conditions
    - MW-24 – Assess potential contamination from waste management area
    - MW-25 – Assess potential offsite contamination from waste management area
    - MW-26 – Assess offsite and potential background conditions
    - MW-27 – Assess offsite and potential background conditions
- Potential replacement of shallow well MW-11. This well has material in its bottom and consequently may be dry during low groundwater level conditions (when berm is breached).

- Installation of 4 deeper Semiperched aquifer well pairs (8 wells) around the perimeter of the WMU to assess the vertical extent of contamination. The wells will be constructed with 10-foot-foot-long screens and 2-inch diameter PVC. The well pairs will be co-located with locations MW-2, MW-3, MW-6, and MW-19. Each pair is likely to include one well screened in the middle (50 to 100 feet bgs) and one well screened towards the bottom (100 to 150 feet bgs) of the Semiperched Aquifer. The impacts to groundwater quality are likely to be highest under the WMU (compared to the smelter area) because of the large downward contaminant flux that would have been created from the large volume of waste liquids disposed here combined with the strong downward hydraulic gradients created by the elevated settling ponds. If there are no water quality impacts in the deeper Semiperched Aquifer under the WMU, it is not likely they are present under the smelter area.

- The deep CPT borings at the 3 locations in the smelter and waste management areas (described in Sections 4.1.1 and 4.1.2) will be used to assess subsurface lithology and groundwater quality prior to drilling and installation of the 4 deeper Semiperched aquifer well pairs. The CPT cones will be fitted with a standard cone to assess lithology (tip and sleeve resistance) and also an Electrical Conductivity/Hydraulic Profile tool (EC/HPT) probe to assess general water quality anomalies and lithologic permeability with depth. Halaco's process waste water was extremely high in total dissolved solids and the extent of subsurface contamination may be able to be correlated with the EC probe. Two CPT probes will be located on the north and south edges of the WMU and one will be located at the smelter area so that a potential 3-dimensional interpretation of lithology and water quality can be obtained.

- Collecting and analyzing 2 rounds of groundwater samples from the 18 existing shallow wells, 8 new shallow wells, and 4 new deeper well pairs. One round will be collected during high water level conditions (beach berm is not breached) and one round will be collected during low water conditions (beach berm is breached). Both rounds will be analyzed for metals (total and dissolved), radionuclides, ammonia, general chemistry and other anions to serve as natural tracers to help fingerprint groundwater types and sources, and field parameters (EC, pH, T, ORP, DO). General chemistry and other ions will include TDS, major cations (Na, K, Ca, Mg), major anions (Cl, SO4, CO3, HCO3), nitrogen species (NO3, NO2, TKN), and other anions (F, I, Br). The first round will also be analyzed for VOCs and SVOCs.

- Measuring groundwater and concurrent surface water elevations during each water quality sampling event, and determining groundwater gradients and flow directions for each of the 2 groundwater sampling events. Groundwater elevations will be measured from all onsite monitoring wells. Surface water elevations will be measured from staff gauges installed in the OID, NCL-East, and NCL-North.

4.2.2 Piezometers

The following will be performed:

- Installation of 2 shallow piezometer networks north of the Smelter Parcel to assess the possibility that groundwater leakage into the City of Oxnard's sanitary sewer trunk line that runs along McWane Blvd is a source of the unusually depressed groundwater

elevations at the northern part of the Site. The piezometers will be constructed of ¾-inch diameter casing and 1-foot long screens. The sewer line is deep, approximately 15 to 20 feet bgs and is operated so that there is minimal liquid in the sewer line. Groundwater leakage into the sewer line or gravel backfill along the sewer line that may ultimately drain into the sewer line could cause a hydraulic sink and lead to the depressed groundwater elevations. 3 piezometers will be installed at each of the 2 locations, one at an elevation about 5- to 10-feet above the sewer line, one at the same elevation as the line, and one at an elevation about 5- to 10-feet below the sewer line.

- Measuring field parameters (EC, pH, T, ORP, DO) during development of the piezometers. These data will be incorporated into the groundwater chemistry data set to help interpret the nature and extent of contamination.
- Measuring groundwater elevations and assessing vertical gradients at the sewer line. A vertically downward gradient from above the sewer line and a vertically upward gradient from below the sewer line could indicate leakage into the sewer line or gravel backfill.
- If leakage into the sewer line is indicated by the 2 piezometer networks north of the Smelter Parcel, install 2 shallow piezometer networks north of the WDA to assess the possibility of groundwater leakage into the sewer trunk line in this area. Collect and evaluate data from these 2 additional piezometer networks similar the data collected and evaluated for the initial 2 piezometers networks.

4.3 Surface Water

Routine surface water sampling at the Site began in 1981 and continued until 2004. Monitoring frequencies varied, but typically were every two months. Analytical parameters also varied, but at a minimum included EC, pH, oil and grease, magnesium, and selected metals (aluminum, copper, zinc). Samples collected between 2002 and 2004 were also analyzed for additional metals, total dissolved solids, sulfate, chloride, hardness, ammonia, nitrate, nitrite, gross alpha, gross beta, thorium isotopes (Th-228, Th-230, Th-232), radium (Ra-226, Ra-228), VOCs, and TPH. Sampling locations varied, but typically included Halaco's wastewater discharge, the OID north and south of the waste management area, the lagoon (starting in 2002), the ditch south of the WMU (starting in 2001), and the "surf line" (starting in 2002). Several one-time sampling events were also completed, in some cases with an expanded list of sampling locations and/or analytes. Surface water samples were collected from 8 locations in the OID and 2 locations in the ditch south of the WMU and analyzed for total metals, radionuclides, and VOCs once in 2006 for the Integrated Assessment. Figure 10 shows surface water sampling locations.

There is evidence that Halaco's wastes affected surface water quality, particularly during the period that Halaco discharged wastewater to the WMU (approximately 1970 to 2002). However, Halaco's impact on surface water is often difficult to distinguish from two other sources for many of the chemical constituents in Halaco's waste: runoff from the 5,935-acre watershed that drains into the OID (PWA, 2007) and seawater that seasonally moves into the lagoon and OID. The latter process occurs when the naturally occurring sand berm

separating the OID and lagoon from the ocean breaches, and seawater moves inland during high tides.

In the OID and lagoon, contamination of surface water probably resulted from direct discharge of waste materials into the OID from 1965 to 1970, erosion and suspension of contaminated bank sediments, stormwater runoff, and groundwater to surface water discharge (because of mounding of groundwater under the WMU). The strongest evidence of an impact from Halaco's wastes is seen in sampling results for ammonia and oil and grease between 1980 and 2002. Sampling results also showed, at times, elevated levels of metals, anions, TDS, and EC, but the increases were inconsistent. Since wastewater discharges ended in about 2002 (lowering groundwater levels) and EPA stabilized the waste pile in 2007 (limiting runoff and erosion), impacts on surface water are probably limited to major storm events when discharge velocities in the OID are high and stormwater runoff overwhelms erosion control measures. Discharge of contaminated groundwater to surface water is also possible, particularly when surface water levels drop after the naturally occurring sand berm is breached. As discussed above, OID sediments (as distinguished from water in the OID) are also contaminated, exceeding risk screening levels for metals and radionuclides.

Surface waters (and sediment) in the small ditch immediately to the south of the WMU, and in standing waters in the NCL-East, also have been affected by Halaco's wastes. Elevated levels of metals, ammonia, and major ions (especially potassium) associated with Halaco's wastewater were measured in liquids observed to seep from the WMU (in 1999), in ponded water in the NCL-East (in 1980 and 1991), and in the ditch to the south of the WMU (in 2003 and 2004). As with the OID and lagoon, current impacts on surface water are probably limited to major storm events, when stormwater runoff overwhelms erosion control measures.

See the *Preliminary Evaluation of the Sources, Nature, Extent, and Movement of Contamination in Surface Water and Groundwater, Halaco Site* (CH2M HILL, 2008a) for a more detailed discussion of surface water flow at the Site, groundwater and surface water interactions, the impact of Halaco's operations on surface water quality at the Site, and summaries of sampling results.

4.3.1 OID, Lagoon, Hueneme Drain, J Street Drain, and Ocean

Additional surface water sampling will be performed for the OID and lagoon even though (1) surface water chemistry is not clearly different north of the Halaco site from the chemistry along the Site or south of the Site in the lagoon and (2) Halaco's impacts are more clearly seen in sediments than in the overlying surface water. This is particularly true since Halaco's wastewater discharge ended in 2002. This difficulty in differentiating chemistry is, in part, due to the lack of complete general chemistry data and other analytes that can be used to finger print or trace waters of different types. In addition, no dissolved metals data are available which are necessary for ecological risk assessment. The following sampling will be performed:

- Collection of 2 comprehensive rounds of surface samples water samples from the OID, lagoon, and seawater system. The first round will be collected during non-breach conditions when the OID is at a high-water stage, and surface water slowly moves

seaward through the lagoon and seeps through the berm toward the ocean. The second round will be collected during breach conditions when ocean water cyclically moves inland with the rising tide and then drains to the ocean with the falling tide. Sampling both conditions is necessary because it is not known when metals surface water concentrations would be highest. They could be higher during either of the following:

(1) Lower-energy high stage when the inland water is moving slower. During this time there is more residence time for partitioning to occur from contaminated sediments into surface water.

(2) Higher-energy low stage when inland flows are faster and seawater is mixing with inland water. During this time there is less residence time for partitioning to occur, but more erosion and suspension of contaminated bottom or bank sediments into surface water. In addition, discharge of contaminated groundwater to surface water is possible during low stage conditions.

- Collection of surface water samples from a sufficient number of OID locations north of the Site (4 locations), OID locations within the Site (4 locations), lagoon (2 locations), and the ocean (2 locations) to look for upstream/downstream differences in water quality that suggest a continuing site impact. Two samples each are proposed for the lagoon and the ocean to assess potential variability within these waters.
- Collecting surface water samples from the J Street and Hueneme drains which are inputs into the OID/lagoon system.
- Analyzing surface water samples for general chemistry and other anions to serve as natural tracers to help fingerprint surface water types and sources. General chemistry and other anions will include total dissolved solids, major cations (Na, K, Ca, Mg), major anions (Cl, SO4, CO3, HCO3), nitrogen species (NO3, NO2, TKN), and other anions (F, I, Br).
- Analyzing surface water samples for field parameters: EC, pH, T, ORP, and DO.
- Analyzing surface water samples for total (unfiltered) and dissolved (filtered) metals (both necessary for ecological risk evaluation), ammonia, and radionuclides.
- Analyzing surface water samples for additional parameters needed to evaluate ecological risk (DO, hardness, alkalinity, pH, temperature, TDS, total organic carbon (TOC), sulfate, nitrate, nitrite, nitrogen as TKN, chloride, and turbidity).
- Measuring surface water elevations to estimate or interpret flow direction and discharge.

4.3.2 Ditch South of WMU

Limited additional surface water sampling will be performed for the ditch south of the WMU to determine the impact of possibly contaminated surface water conveyed by the ditch into NCL-East during high water levels in the OID. The following sampling will be performed:

- 1 round of surface samples water samples will be collected from the ditch at 2 locations. The ditch samples will be collected during the high water sampling event for the OID and lagoon (the ditch is empty during low water conditions).
- The samples will be analyzed for the same parameters as the OID and lagoon samples.

4.3.3 NCL East

Limited sampling will be performed for the NCL-East to determine the impact of possibly contaminated surface water conveyed by the ditch south of the WMU into NCL-East during high water levels in the OID.

- 2 rounds of surface samples water samples will be collected from NCL- East at 3 locations. One round will be collected during the high water sampling event for the OID and lagoon when the NCL-East surface water has risen and is of a broader aerial extent. Another round will be collected during the low water sampling event for the OID and lagoon when the NCL- East surface water has receded and is of a more limited aerial extent.
- The samples will be analyzed for the same parameters as the OID and lagoon samples.

4.4 Air

In June 2006, temporary air filters were placed at six locations around the Site over an eight-day period, and particulate matter (i.e., dust) collected on the filters was sent to an offsite laboratory for analysis. Figure 11 shows the six sampling locations and depicts the concentrations of metals in the samples from the six locations. A tabular summary of results is available in the *Integrated Assessment, Halaco Engineering Company, Oxnard, California, Ventura County* (Weston, 2007). Several analytes (Be, Cd, Cu, Pb, Mg, Mn, Mo, Ni) were higher in concentration at downwind locations (AIR-2, AIR-3, AIR-6) compared to upwind locations (AIR-1). The samples were collected during a period of moderate winds out of the west that are typical of the summer months when the sampling occurred.

These samples were collected before EPA completed its stabilization effort in 2007, which included the consolidation and removal of loose waste solids from the smelter area and placement of approximately 141,000 square yards of fiber matting over the WMU and WDA to reduce wind- and water-borne movement of waste materials.

Figure 12 depicts monthly wind roses for Oxnard Airport data measured in 2004 and 2005. The wind roses show moderate winds consistently from the west during the non-winter months from mid-March through early October. During winter, winds are typically from the west or northeast, with higher peak wind speeds than in the non-winter months.

Additional monitoring will be performed during periods of high winds to determine whether windblown material is moving offsite. The following sampling will be performed:

- Performing a monitoring event during winter conditions when the wind is from the west and particulates would be blown from the Smelter Parcel and Waste Disposal Area

towards the east over NCL-East. 5 temporary monitoring stations will be set up at the following locations:

- Upwind far enough not to be affected by the Site (wetlands visitor parking lot)
- Downwind edge of the southwest corner of the smelter parcel, where concrete was removed
- Downwind edge of the waste management area, co-located with previous AIR-3
- Downwind of waste management area in NCL-East
- Oblique downwind of waste management area in NCL-North

- Each monitoring event will consist of 6 samples collected daily. 3 samples will be collected during calmer conditions prior to the onset of a wind event or storm, and 3 samples will be collected during the wind event. If possible, a wind event without precipitation will be monitored because the rainfall will moisten waste materials making them less susceptible to wind erosion.

- Analyzing each of the daily air samples for metals and radionuclides.

SECTION 5

Request for Analysis

5.1 Analytical Parameters

This section presents the requests for analyses of samples that will be collected.

Table 5-1 summarizes the chemical analytical parameters, test methods, and target detection limits. This table is organized as follows:

5-1.1 Metals for Water, Soil, Sediment, and Air
5-1.2 VOCs for Water, Soil, Sediment, and Soil Gas
5-1.3 SVOCs for Water, Soil, and Sediment
5-1.4 PCBs for Soil and Sediment
5-1.5 Dioxins and Furans for Soil and Sediment
5-1.6 Radionuclides for Water, Soil, and Sediment
5-1.7 Ammonia and Other Gases for Soil Gas
5-1.8 Additional Organic and Inorganic Parameters for Water and Soil

These laboratory analyses will be performed by Contract Laboratory Program (CLP), EPA's Region IX laboratory, and contract laboratories.

Table 5-2 summarizes the geotechnical analytical parameters and test methods.

5.2 Request for Analyses

Request for analyses is presented in the following tables:

- Table 5-3 Solid Matrix Samples
- Table 5-4 Soil Gas Matrix Samples
- Table 5-5 Water Matrix Samples (Surface Water and Groundwater)
- Table 5-6 Air Matrix Samples
- Table 5-7 Geotechnical Samples
- Table 5-8 Field Blanks

Tables 5-3 through 5-6 include duplicate and matrix spike/matrix spike duplicate (MS/MSD) quality control samples expected to be collected for the respective media.

Table 5-8 provides the field blank samples (equipment blanks and trip blanks) expected to be collected for the respective media (soils, water, and soil gas). These quality control samples are further described in Section 6.2.2.

Quality control samples will not be collected for geotechnical samples (Table 5-7).

TABLE 5-1.1

Laboratory Analytical Parameters, Test Methods, and Target Detection Limits
Metals for Water, Soil, Sediment, and Air
Halaco Site Remedial Investigation

Analyte	Method	ILM05.4 CRQLs		
		ICP-AES	ICP-MS	ICP-AES
		Water (ug/L)	Water (ug/L)	Soil (mg/kg)
Water, Soil, and Sediment	**CLP**			
Air (collected on filter media)	**CLP**			
Aluminum		200	--	20
Antimony		60	2	6
Arsenic		10	1	1
Barium		200	10	20
Beryllium		5	1	0.5
Cadmium		5	1	0.5
Calcium		5000	--	500
Chromium		10	2	1
Cr +3				
Cr +6				
Cobalt		50	1	5
Copper		25	2	2.5
Iron		100	--	10
Lead		10	1	1
Magnesium		5000	--	500
Manganese		15	1	1.5
Mercury		0.2	--	0.1
Nickel		40	1	4
Potassium		5000	--	500
Selenium		35	5	3.5
Silver		10	1	1
Sodium		5000	--	500
Thallium		25	1	2.5
Vanadium		50	5	5
Zinc		60	2	6
Cyanide		10	--	2.5

Analyte List / Detection Limits:
ILM05.4 Metals and Cyanide Target Analyte List (TAL) and corresponding Contract Required Quantitation Limits (CRQLs)

TABLE 5-1.2
Laboratory Analytical Parameters, Test Methods, and Target Detection Limits
VOCs for Water, Soil, Sediment, and Soil Gas
Halaco Site Remedial Investigation

COMPOUND	Method	SOM01.2 CRQLs for Water and Soil					Air
		Trace Water by SIM (ug/L)	Trace Water (ug/L)	Low Water (ug/L)	Low Soil (ug/kg)	Med. Soil (ug/kg)	(soil gas) (units)
Water, Soil, and Sediment	**CLP**						
Air (soil gas)	**TO-15**						**TBD**
Dichlorodifluoromethane		--	0.5	5	5	250	
Chloromethane		--	0.5	5	5	250	
Vinyl chloride		--	0.5	5	5	250	
Bromomethane		--	0.5	5	5	250	
Chloroethane		--	0.5	5	5	250	
Trichlorofluoromethane		--	0.5	5	5	250	
1,1-Dichloroethene		--	0.5	5	5	250	
1,1,2-Trichloro-1,2,2-trifluoroethane		--	0.5	5	5	250	
Acetone		--	5	10	10	500	
Carbon disulfide		--	0.5	5	5	250	
Methyl acetate		--	0.5	5	5	250	
Methylene chloride		--	0.5	5	5	250	
trans-1,2-Dichloroethene		--	0.5	5	5	250	
Methyl tert-butyl ether		--	0.5	5	5	250	
1,1-Dichloroethane		--	0.5	5	5	250	
cis-1,2-Dichloroethene		--	0.5	5	5	250	
2-Butanone		--	5	10	10	500	
Bromochloromethane		--	0.5	5	5	250	
Chloroform		--	0.5	5	5	250	
1,1,1-Trichloroethane		--	0.5	5	5	250	
Cyclohexane		--	0.5	5	5	250	
Carbon tetrachloride		--	0.5	5	5	250	
Benzene		--	0.5	5	5	250	
1,2-Dichloroethane		--	0.5	5	5	250	
1,4-Dioxane		--	--	100	100	5000	
Trichloroethene		--	0.5	5	5	250	
Methylcyclohexane		--	0.5	5	5	250	
1,2-Dichloropropane		--	0.5	5	5	250	
Bromodichloromethane		--	0.5	5	5	250	
cis-1,3-Dichloropropene		--	0.5	5	5	250	
4-Methyl-2-pentanone		--	5	10	10	500	
Toluene		--	0.5	5	5	250	
trans-1,3-Dichloropropene		--	0.5	5	5	250	
1,1,2-Trichloroethane		--	0.5	5	5	250	
Tetrachloroethene		--	0.5	5	5	250	
2-Hexanone		--	5	10	10	500	
Dibromochloromethane		--	0.5	5	5	250	
1,2-Dibromoethane		0.05	0.5	5	5	250	
Chlorobenzene		--	0.5	5	5	250	
Ethylbenzene		--	0.5	5	5	250	
o-Xylene		--	0.5	5	5	250	
m,p-Xylene		--	0.5	5	5	250	
Styrene		--	0.5	5	5	250	
Bromoform		--	0.5	5	5	250	
Isopropylbenzene		--	0.5	5	5	250	
1,1,2,2-Tetrachloroethane		--	0.5	5	5	250	

TABLE 5-1.2
Laboratory Analytical Parameters, Test Methods, and Target Detection Limits
VOCs for Water, Soil, Sediment, and Soil Gas
Halaco Site Remedial Investigation

COMPOUND	Method	SOM01.2 CRQLs for Water and Soil					Air
		Trace Water by SIM (ug/L)	Trace Water (ug/L)	Low Water (ug/L)	Low Soil (ug/kg)	Med. Soil (ug/kg)	(soil gas) (units)
Water, Soil, and Sediment	**CLP**						
Air (soil gas)	**TO-15**						**TBD**
1,3-Dichlorobenzene		--	0.5	5	5	250	
1,4-Dichlorobenzene		--	0.5	5	5	250	
1,2-Dichlorobenzene		--	0.5	5	5	250	
1,2-Dibromo-3-chloropropane		0.05	0.5	5	5	250	
1,2,4-Trichlorobenzene		--	0.5	5	5	250	
1,2,3-Trichlorobenzene		--	0.5	5	5	250	

Analyte List / Detection Limits:
SOM01.2 Volatile Target Compound List
(TCL) and corresponding Contract
Required Quantitation Limits (CRQLs)

TABLE 5-1.3
Laboratory Analytical Parameters, Test Methods, and Target Detection Limits
SVOCs for Water, Soil, and Sediment
Halaco Site Remedial Investigation

Compound	Method	SOM01.2 CRQLs for Water and Soil				
		Water by SIM (ug/L)	Low Water (ug/L)	Low Soil by SIM (ug/kg)	Low Soil (ug/kg)	Med. Soil (ug/kg)
Water, Soil, and Sediment	**CLP**					
Benzaldehyde		--	5	--	170	5,000
Phenol		--	5	--	170	5,000
Bis(2-chloroethyl) ether		--	5	--	170	5,000
2-Chlorophenol		--	5	--	170	5,000
2-Methylphenol		--	5	--	170	5,000
2,2'-Oxybis(1-choloropropane)		--	5	--	170	5,000
Acetophenone		--	5	--	170	5,000
4-Methylphenol		--	5	--	170	5,000
N-Nitroso-di-n propylamine		--	5	--	170	5,000
Hexachloroethane		--	5	--	170	5,000
Nitrobenzene		--	5	--	170	5,000
Isophorone		--	5	--	170	5,000
2-Nitrophenol		--	5	--	170	5,000
2,4-Dimethylphenol		--	5	--	170	5,000
Bis(2-chloroethoxy) methane		--	5	--	170	5,000
2,4-Dichlorophenol		--	5	--	170	5,000
Naphthalene		0.1	5	3.3	170	5,000
4-Chloroaniline		--	5	--	170	5,000
Hexachlorobutadiene		--	5	--	170	5,000
Caprolactam		--	5	--	170	5,000
4-Chloro-3-methylphenol		--	5	--	170	5,000
2-Methylnaphthalene		0.1	5	3.3	170	5,000
Hexachlorocyclopentadiene		--	5	--	170	5,000
2,4,6-Trichlorophenol		--	5	--	170	5,000
2,4,5-Trichlorophenol		--	5	--	170	5,000
1,1'-Biphenyl		--	5	--	170	5,000
2-Chloronaphthalene		--	5	--	170	5,000
2-Nitroaniline		--	10	--	330	10,000
Dimethylphthalate		--	5	--	170	5,000
2,6-Dinitrotoluene		--	5	--	170	5,000
Acenaphthylene		0.1	5	3.3	170	5,000
3-Nitroaniline		--	10	--	330	10,000
Acenaphthene		0.1	5	3.3	170	5,000
2,4-Dinitrophenol		--	10	--	330	10,000
4-Nitrophenol		--	10	--	330	10,000
Dibenzofuran		--	5	--	170	5,000
2,4-Dinitrotoluene		--	5	--	170	5,000
Diethylphthalate		--	5	--	170	5,000
Fluorene		0.1	5	3.3	170	5,000
4-Chlorophenyl-phenyl ether		--	5	--	170	5,000
4-Nitroaniline		--	10	--	330	10,000
4,6-Dinitro-2-methylphenol		--	10	--	330	10,000
N-Nitrosodiphenylamine		--	5	--	170	5,000
1,2,4,5-Tetrachlorobenzene		--	5	--	170	5,000
4-Bromophenyl-phenylether		--	5	--	170	5,000
Hexachlorobenzene		--	5	--	170	5,000
Atrazine		--	5	--	170	5,000
Pentachlorophenol		0.2	10	6.7	330	10,000

TABLE 5-1.3
Laboratory Analytical Parameters, Test Methods, and Target Detection Limits
SVOCs for Water, Soil, and Sediment
Halaco Site Remedial Investigation

Compound	Method	SOM01.2 CRQLs for Water and Soil				
		Water by SIM (ug/L)	Low Water (ug/L)	Low Soil by SIM (ug/kg)	Low Soil (ug/kg)	Med. Soil (ug/kg)
Water, Soil, and Sediment	**CLP**					
Phenanthrene		0.1	5	3.3	170	5,000
Anthracene		0.1	5	3.3	170	5,000
Carbazole		--	5	--	170	5,000
Di-n-butylphthalate		--	5	--	170	5,000
Fluoranthene		0.1	5	3.3	170	5,000
Pyrene		0.1	5	3.3	170	5,000
Butylbenzylphthalate		--	5	--	170	5,000
3,3'-dicholorobenzidine		--	5	--	170	5,000
Benzo(a)anthracene		0.1	5	3.3	170	5,000
Chrysene		0.1	5	3.3	170	5,000
Bis(2-ethylhexyl) phthalate		--	5	--	170	5,000
Di-n-octylphthalate		--	5	--	170	5,000
Benzo(b) fluoranthene		0.1	5	3.3	170	5,000
Benzo(k) fluoranthene		0.1	5	3.3	170	5,000
Benzo(a) pyrene		0.1	5	3.3	170	5,000
Indeno(1,2,3,-cd) pyrene		0.1	5	3.3	170	5,000
Dibenzo(a,h) anthracene		0.1	5	3.3	170	5,000
Benzo(g,h,i) perylene		0.1	5	3.3	170	5,000
2,3,4,6-Tetrachlorophenol		--	5	--	170	5,000

Analyte List / Detection Limits:
SOM01.2 Semivolatile Target Compound List (TAL) and corresponding Contract Required Quantitation Limits (CRQLs)

TABLE 5-1.4
Laboratory Analytical Parameters, Test Methods, and Target Detection Limits
PCBs for Soil and Sediment
Halaco Site Remedial Investigation

Compound	Method	SOM01.2 CRQLs	
		Water (ug/kg)	Soil (ug/kg)
Soil and Sediment	**CLP**		
Water (field blanks only)	**CLP**		
Aroclor-1016		1	33
Aroclor-1221		1	33
Aroclor-1232		1	33
Aroclor-1242		1	33
Aroclor-1248		1	33
Aroclor-1254		1	33
Aroclor-1260		1	33
Aroclor-1262		1	33
Aroclor-1268		1	33

Analyte List / Detection Limits:
SOM01.2 Pesticides/Aroclors
Target Compound List (TCL) and
corresponding Contract Required
Quantitation Limits (CRQLs)

TABLE 5-1.5
Laboratory Analytical Parameters, Test Methods, and Target Detection Limits
Dixoins and Furans for Soil and Sediment
Halaco Site Remedial Investigation

Compound	WHO 1988 TEF	WHO 2005 TEF	Method	Target Detection Limits Water (units)	Target Detection Limits Soil (units)
Soil and Sediment			**CLP**		
Water (field blanks only)			**CLP**		
Chlorinated dibenzo-p-dioxins					
2,3,7,8-TCDD	1	1		TBD	TBD
1,2,3,7,8-PeCDD[4]	1	1		TBD	TBD
1,2,3,4,7,8-HxCDD	0.1	0.1		TBD	TBD
1,2,3,6,7,8-HxCDD	0.1	0.1		TBD	TBD
1,2,3,7,8,9-HxCDD	0.1	0.1		TBD	TBD
1,2,3,4,6,7,8-HpCDD	0.01	0.01		TBD	TBD
OCDD	0.0001	0.0003		TBD	TBD
Chlorinated dibenzofurans					
2,3,7,8-TCDF	0.1	0.1		TBD	TBD
1,2,3,7,8-PeCDF	0.05	0.03		TBD	TBD
2,3,4,7,8-PeCDF	0.5	0.3		TBD	TBD
1,2,3,4,7,8-HxCDF	0.1	0.1		TBD	TBD
1,2,3,6,7,8-HxCDF	0.1	0.1		TBD	TBD
1,2,3,7,8,9-HxCDF	0.1	0.1		TBD	TBD
2,3,4,6,7,8-HxCDF	0.1	0.1		TBD	TBD
1,2,3,4,6,7,8-HpCDF	0.01	0.01		TBD	TBD
1,2,3,6,7,8,9-HpCDF	0.01	0.01		TBD	TBD
OCDF	0.0001	0.0003		TBD	TBD

Analyte List:
World Health Organization (WHO, 1998).

Notes:
TBD = To be determined.

TABLE 5-1.6
Laboratory Analytical Parameters, Test Methods, and Target Detection Limits
Radionuclides for Water, Soil, and Sediment
Halaco Site Remedial Investigation

Radiunuclide	Method	Target Detection Limits	
		Water (units)	Soil (units)
Water, Soil, and Sediment	**EPA 901**		
Thorium-228		TBD	TBD
Thorium-230		TBD	TBD
Thorium-232		TBD	TBD
Radium-226		TBD	TBD
Radium-228		TBD	TBD

Notes:
TBD = To be determined.

TABLE 5-1.7
Laboratory Analytical Parameters, Test Methods, and Target Detection Limits
Ammonia and Other Gases for Soil Gas
Halaco Site Remedial Investigation

Analyte	Method	Target Detection Limit (units)
Ammonia	NIOSH 6015	TBD
Hydrogen Sulfide	EPA 16 or ASTM D5504	TBD
Hydrogen	EPA TO-3 or ASTM 3416 or SM2770	TBD
Methane		TBD
Carbon Monoxide		TBD
Carbon Dioxide		TBD
Oxygen		TBD
Acetylene	TBD	TBD

Notes:
TBD - To be determined after selection of lab

TABLE 5-1.8

Laboratory Analytical Parameters, Test Methods, and Target Detection Limits

Additional Organic and Inorganic Parameters for Water, Soil, and Sediment

Halaco Site Remedial Investigation

Matrix	Group	Compound	Method	Reporting Limit/Target Detection Limit
Water	General	Electrical Conductivity (EC)	EPA 120	TBD
		Total Dissolved Solids (TDS)	EPA 160.1	20 mg/l
		Hardness	EPA 130	20 mg/l
		pH	EPA 150	NA
	Major Cations (also in metals analysis)	Calcium	CLP	CLP
		Potassium	CLP	CLP
		Magnesium	CLP	CLP
		Sodium	CLP	CLP
	Major Anions	Bicarbonate Alkalinity as $CaCO_3$	SM 2320B	20 mg/l
		Carbonate Alkalinity as $CaCO_3$	SM 2320B	20 mg/l
		Hydroxide Alkalinity as $CaCO_3$	SM 2320B	20 mg/l
		Chloride	EPA 300	1 mg/l
		Sulfate	EPA 300	1 mg/l
	Nitrogen Species	Ammonia	EPA 350.2	0.3 mg/l
		Nitrate	EPA 300	0.1 mg/l
		Nitrate	EPA 300	0.1 mg/l
		Total Kjeldahl Nitrogen (TKN)	EPA 351.2	0.1 mg/l
	Tracers (additional anions)	Fluoride	EPA 300	0.1 mg/l
		Bromide	EPA 300	1 mg/l
		Iodide	EPA 300	TBD
	Field Parameters	pH	field	(a)
		Electrical Conductivity (EC)	field	(a)
		Temperature (T)	field	(a)
		Dissolved Oxygen (DO)	field	(a)
		Oxidation-Reduction Potential (ORP)	field	(a)
	Total Petroleum Hydrocarbons	TPH-gas	EPA 8015M	0.1 mg/l
		TPH-diesel	EPA 8015M	1 mg/l
		TPH-oil	EPA 8015M	1 mg/l
	TOC	Total Organic Carbon (TOC)	EPA 415	2 mg/l
Soil and Sediment	General	Total Organic Carbon (TOC)	EPA 415M	TBD
		pH	EPA 9045	NA
	Total Petroleum Hydrocarbons	TPH-gas	EPA 8015M	10 mg/kg
		TPH-diesel	EPA 8015M	10 mg/kg
		TPH-oil	EPA 8015M	10 mg/kg

Notes:

(a) per field instrument manufacturer instructions

NA - Not applicable

TBD - To be determined after selection of lab

Table 5-2

Geotechnical Analytical Parameters and Test Methods

Halaco Site Remedial Investigation

Analyte	Method	Target Detection Limit
Moisture and Density (Ring Samples)	ASTM D 2938	NA
Hydrometer Gradation Testing	ASTM D 423	NA
Atterberg Limits	ASTM D 4319	NA
Modified Proctor	ASTM D 1558	NA
Direct Shear	ASTM D 3081	NA

Notes:

NA - Not applicable

TABLE 5-3
Request for Analysis, Solid Matrix Samples
Halaco Site Remedial Investigation

Area	Subarea	No. of Sample Loca-tions	No. of Sample Depths/ Location	Boring Depth (feet, bgs)	Sample Depths (feet, bgs)	Sample ID	Depth (ft, bgs) *	QC Sample	Radionuclides	TAL Metals	TCL VOCs	TCL SVOC	TCL PCBs	WHO Dioxins	TPH-g	TPH-d	TOC and pH
								Lab	TBD	CLP					Region 9		TBD
								Temperature	4 degrees C								
								Preservative	TBD	-	-	-	-	-	-	-	-
								Container	TBD	1-8oz Jar	3-5gm Encore	1-8oz Jar	1-8oz Jar	1-8oz Jar	3-5gm Encore	1-8oz Jar	1-4oz Jar
								Holding Time, Extraction	TBD	-	-	14 days	14 days	14 days	-	14 days	
								Holding Time, Analysis	TBD	6 mths^	48 hrs	40 days	40 days	40 days	48 hrs	40 days	28 days
Smelter Percel	North Area, shallow	10	2	3	0, 2	SM- SPN-xxx- X	*Target Freq (%)*		100	100	25	25	-	-	25	25	-
						SPN-001- A	0		X	X							
						" B	2		X	X							
						SPN-002- A	0	MS/MSD	X	X	X	X			X	X	
						" B	2	MS/MSD	X	X	X	X			X	X	
						SPN-003- A	0	***	X	X	X	X			X	X	
						" B	2	***	X	X	X	X			X	X	
						SPN-103- A	0	Duplicate	D	D	D	D			D	D	
						" B	2	Duplicate	D	D	D	D			D	D	
						SPN-004- A	0		X	X							
						" B	2		X	X							
						SPN-005- A	0		X	X							
						" B	2		X	X							
						SPN-006- A	0		X	X							
						" B	2		X	X							
						SPN-007- A	0		X	X							
						" B	2		X	X							
						SPN-008- A	0		X	X							
						" B	2		X	X							
						SPN-009- A	0		X	X							
						" B	2		X	X							
						SPN-010- A	0		X	X							
						" B	2		X	X							
	North Area, deep	2	5	15 to 25	0, 5, 10, OW, N	SM- SPN-xxx- D	*Target Freq (%)*		100	100	25	25	-	-	25	25	-
						SPN-011- A	0		X	X							
						" B	5		X	X							
						" C	10		X	X							
						" D	OW		X	X							
						" E	N		X	X							
						SPN-012- A	0	***	X	X							
						" B	5	***	X	X							
						" C	10	***	X	X							
						" D	OW	***	X	X							
						" E	N	***	X	X							
						SPN-112- A	0	Duplicate	D	D							
						" B	5	Duplicate	D	D							
						" C	10	Duplicate	D	D							
						" D	OW	Duplicate	D	D							
						" E	N	Duplicate	D	D							
	Parking Area	4	2	3	0, 2	SM- SPP-xxx- D	*Target Freq (%)*		100	100	50	50	-	-	50	50	-
						SPP-001- A	0		X	X							
						" B	2		X	X							
						SPP-002- A	0		X	X							
						" B	2		X	X							
						SPP-003- A	0		X	X	X	X			X	X	
						" B	2		X	X	X	X			X	X	
						SPP-004- A	0		X	X	X	X			X	X	
						" B	2		X	X	X	X			X	X	
	Smelter and SE Area	27	5	15 to 25	0, 5, 10, OW, N	SM- SPS-xxx- D	*Target Freq (%)*		100	100	50	50	25	25	50	50	-
						SPS-001- A	0		X	X							
						" B	5		X	X							
						" C	10		X	X							
						" D	OW		X	X							
						" E	N		X	X							
						SPS-002- A	0	***	X	X	X	X	X	X	X	X	
						" B	5	***	X	X	X	X	X	X	X	X	
						" C	10	***	X	X	X	X	X	X	X	X	
						" D	OW	***	X	X	X	X	X	X	X	X	
						" E	N	***	X	X	X	X	X	X	X	X	
						SPS-102- A	0	Duplicate	D	D	D	D	D	D	D	D	
						" B	5	Duplicate	D	D	D	D	D	D	D	D	
						" C	10	Duplicate	D	D	D	D	D	D	D	D	
						" D	OW	Duplicate	D	D	D	D	D	D	D	D	
						" E	N	Duplicate	D	D	D	D	D	D	D	D	
						SPS-003- A	0		X	X							
						" B	5		X	X							
						" C	10		X	X							
						" D	OW		X	X							
						" E	N		X	X							
						SPS-004- A	0	MS/MSD	X	X	X	X	X	X	X	X	
						" B	5	MS/MSD	X	X	X	X	X	X	X	X	
						" C	10	MS/MSD	X	X	X	X	X	X	X	X	
						" D	OW	MS/MSD	X	X	X	X	X	X	X	X	
						" E	N	MS/MSD	X	X	X	X	X	X	X	X	
						SPS-005- A	0		X	X							
						" B	5		X	X							
						" C	10		X	X							
						" D	OW		X	X							
						" E	N		X	X							
						SPS-006- A	0		X	X	X	X			X	X	
						" B	5		X	X	X	X			X	X	
						" C	10		X	X	X	X			X	X	
						" D	OW		X	X	X	X			X	X	
						" E	N		X	X	X	X			X	X	
						SPS-007- A	0		X	X	X	X			X	X	
						" B	5		X	X	X	X			X	X	
						" C	10		X	X	X	X			X	X	
						" D	OW		X	X	X	X			X	X	
						" E	N		X	X	X	X			X	X	
						SPS-008- A	0		X	X	X	X			X	X	
						" B	5		X	X	X	X			X	X	
						" C	10		X	X	X	X			X	X	
						" D	OW		X	X	X	X			X	X	
						" E	N		X	X	X	X			X	X	
						SPS-009- A	0		X	X							
						" B	5		X	X							
						" C	10		X	X							
						" D	OW		X	X							
						" E	N		X	X							
						SPS-010- A	0		X	X	X	X	X	X	X	X	
						" B	5		X	X	X	X	X	X	X	X	
						" C	10		X	X	X	X	X	X	X	X	
						" D	OW		X	X	X	X	X	X	X	X	

TABLE 5-3
Request for Analysis, Solid Matrix Samples
Halaco Site Remedial Investigation

Area	Subarea	No. of Sample Loca-tions	No. of Sample Depths/ Location	Boring Depth (feet, bgs)	Sample Depths (feet, bgs)	Sample ID	Depth (ft, bgs) *	QC Sample	Radionuclides	TAL Metals	TCL VOCs	TCL SVOC	TCL PCBs	WHO Dioxins	TPH-g	TPH-d	TOC and pH
								Lab	TBD	CLP					Region 9		TBD
								Temperature	4 degrees C								
								Preservative	TBD	-	-	-	-	-	-	-	-
								Container	TBD	1-8oz Jar	3-5gm Encore	1-8oz Jar	1-8oz Jar	1-8oz Jar	3-5gm Encore	1-8oz Jar	1-4oz Jar
								Holding Time, Extraction	TBD	-	-	14 days	14 days	14 days	-	14 days	
								Holding Time, Analysis	TBD	6 mths^	48 hrs	40 days	40 days	40 days	48 hrs	40 days	28 days
						" E	N		X	X	X	X	X	X	X	X	
						SPS-011- A	0		X	X							
						" B	5		X	X							
						" C	10		X	X							
						" D	OW		X	X							
						" E	N		X	X							
						SPS-012- A	0		X	X	X	X	X	X	X	X	
						" B	5		X	X	X	X	X	X	X	X	
						" C	10		X	X	X	X	X	X	X	X	
						" D	OW		X	X	X	X	X	X	X	X	
						" E	N		X	X	X	X	X	X	X	X	
						SPS-013- A	0		X	X							
						" B	5		X	X							
						" C	10		X	X							
						" D	OW		X	X							
						" E	N		X	X							
						SPS-014- A	0		X	X	X	X	X	X	X	X	
						" B	5		X	X	X	X	X	X	X	X	
						" C	10		X	X	X	X	X	X	X	X	
						" D	OW		X	X	X	X	X	X	X	X	
						" E	N		X	X	X	X	X	X	X	X	
						SPS-015- A	0	***	X	X	X	X			X	X	
						" B	5	***	X	X	X	X			X	X	
						" C	10	***	X	X	X	X			X	X	
						" D	OW	***	X	X	X	X			X	X	
						" E	N	***	X	X	X	X			X	X	
						SPS-115- A	0	Duplicate	D	D	D	D			D	D	
						" B	5	Duplicate	D	D	D	D			D	D	
						" C	10	Duplicate	D	D	D	D			D	D	
						" D	OW	Duplicate	D	D	D	D			D	D	
						" E	N	Duplicate	D	D	D	D			D	D	
						SPS-016- A	0		X	X	X	X	X	X	X	X	
						" B	5		X	X	X	X	X	X	X	X	
						" C	10		X	X	X	X	X	X	X	X	
						" D	OW		X	X	X	X	X	X	X	X	
						" E	N		X	X	X	X	X	X	X	X	
						SPS-017- A	0		X	X							
						" B	5		X	X							
						" C	10		X	X							
						" D	OW		X	X							
						" E	N		X	X							
						SPS-018- A	0		X	X	X	X			X	X	
						" B	5		X	X	X	X			X	X	
						" C	10		X	X	X	X			X	X	
						" D	OW		X	X	X	X			X	X	
						" E	N		X	X	X	X			X	X	
						SPS-019- A	0		X	X							
						" B	5		X	X							
						" C	10		X	X							
						" D	OW		X	X							
						" E	N		X	X							
						SPS-020- A	0		X	X	X	X	X	X	X	X	
						" B	5		X	X	X	X	X	X	X	X	
						" C	10		X	X	X	X	X	X	X	X	
						" D	OW		X	X	X	X	X	X	X	X	
						" E	N		X	X	X	X	X	X	X	X	
						SPS-021- A	0		X	X							
						" B	5		X	X							
						" C	10		X	X							
						" D	OW		X	X							
						" E	N		X	X							
						SPS-022- A	0		X	X	X	X			X	X	
						" B	5		X	X	X	X			X	X	
						" C	10		X	X	X	X			X	X	
						" D	OW		X	X	X	X			X	X	
						" E	N		X	X	X	X			X	X	
						SPS-023- A	0		X	X							
						" B	5		X	X							
						" C	10		X	X							
						" D	OW		X	X							
						" E	N		X	X							
						SPS-024- A	0		X	X	X	X			X	X	
						" B	5		X	X	X	X			X	X	
						" C	10		X	X	X	X			X	X	
						" D	OW		X	X	X	X			X	X	
						" E	N		X	X	X	X			X	X	
						SPS-025- A	0		X	X							
						" B	5		X	X							
						" C	10		X	X							
						" D	OW		X	X							
						" E	N		X	X							
						SPS-026- A	0		X	X	X	X			X	X	
						" B	5		X	X	X	X			X	X	
						" C	10		X	X	X	X			X	X	
						" D	OW		X	X	X	X			X	X	
						" E	N		X	X	X	X			X	X	
						SPS-027- A	0		X	X							
						" B	5		X	X							
						" C	10		X	X							
						" D	OW		X	X							
						" E	N		X	X							
Waste Mgt Area	WMU	9	2	40 to 50	0, 5	SM- WMU-xxx- X	*Target Freq (%)*		-	100	100	100	100	100	100	100	-
						WMU-001- A	0			X	X	X	X	X	X	X	
						" B	5			X	X	X	X	X	X	X	
						WMU-002- A	0			X	X	X	X	X	X	X	
						" B	5			X	X	X	X	X	X	X	
						WMU-003- A	0			X	X	X	X	X	X	X	
						" B	5			X	X	X	X	X	X	X	
						WMU-004- A	0			X	X	X	X	X	X	X	
						" B	5			X	X	X	X	X	X	X	
						WMU-005- A	0	***		X	X	X	X	X	X	X	
						" B	5	***		X	X	X	X	X	X	X	
						WMU-105- A	0	Duplicate		D	D	D	D	D	D	D	

TABLE 5-3
Request for Analysis, Solid Matrix Samples
Halaco Site Remedial Investigation

Area	Subarea	No. of Sample Loca-tions	No. of Sample Depths/ Location	Boring Depth (feet, bgs)	Sample Depths (feet, bgs)	Sample ID	Depth (ft, bgs) *	QC Sample	Radionuclides	TAL Metals	TCL VOCs	TCL SVOC	TCL PCBs	WHO Dioxins	TPH-g	TPH-d	TOC and pH
								Lab	TBD	CLP					Region 9		TBD
								Temperature	4 degrees C								
								Preservative	TBD	-	-	-	-	-	-	-	-
								Container	TBD	1-8oz Jar	3-5gm Encore	1-8oz Jar	1-8oz Jar	1-8oz Jar	3-5gm Encore	1-8oz Jar	1-4oz Jar
								Holding Time, Extraction	TBD	-	-	14 days	14 days	14 days	-	14 days	
								Holding Time, Analysis	TBD	6 mths^	48 hrs	40 days	40 days	40 days	48 hrs	40 days	28 days
						" B	5	Duplicate		D	D	D	D	D	D	D	
						WMU-006- A	0			X	X	X	X	X	X	X	
						" B	5			X	X	X	X	X	X	X	
						WMU-007- A	0			X	X	X	X	X	X	X	
						" B	5			X	X	X	X	X	X	X	
						WMU-008- A	0			X	X	X	X	X	X	X	
						" B	5			X	X	X	X	X	X	X	
						WMU-009- A	0			X	X	X	X	X	X	X	
						" B	5			X	X	X	X	X	X	X	
			3	40 to 50	30, 35, N	SM- WMU-xxx- X	*Target Freq (%)*		100	100	50	50	25	25	50	50	-
						WMU-001- C	30		X	X							
						" D	35		X	X							
						" E	N		X	X							
						WMU-002- C	30		X	X	X	X			X	X	
						" D	35		X	X	X	X			X	X	
						" E	N		X	X	X	X			X	X	
						WMU-003- C	30		X	X							
						" D	35		X	X							
						" E	N		X	X							
						WMU-004- C	30		X	X	X	X	X	X	X	X	
						" D	35		X	X	X	X	X	X	X	X	
						" E	N		X	X	X	X	X	X	X	X	
						WMU-005- C	30	***	X	X							
						" D	35	***	X	X							
						" E	N	***	X	X							
						WMU-105- C	30	Duplicate	D	D							
						" D	35	Duplicate	D	D							
						" E	N	Duplicate	D	D							
						WMU-006- C	30		X	X	X	X	X	X	X	X	
						" D	35		X	X	X	X	X	X	X	X	
						" E	N		X	X	X	X	X	X	X	X	
						WMU-007- C	30		X	X							
						" D	35		X	X							
						" E	N		X	X							
						WMU-008- C	30		X	X	X	X			X	X	
						" D	35		X	X	X	X			X	X	
						" E	N		X	X	X	X			X	X	
						WMU-009- C	30		X	X							
						" D	35		X	X							
						" E	N		X	X							
	WDA	6	1	10 to 20	0	SM- WDA-xxx- X	*Target Freq (%)*		-	100	100	100	100	100	100	100	-
						WDA-001- A	0			X	X	X	X	X	X	X	
						WDA-002- A	0			X	X	X	X	X	X	X	
						WDA-003- A	0			X	X	X	X	X	X	X	
						WDA-004- A	0	MS/MSD		X	X	X	X	X	X	X	
						WDA-005- A	0	***		X	X	X	X	X	X	X	
						WDA-105- A	0	Duplicate		D	D	D	D	D	D	D	
						WDA-006- A	0			X	X	X	X	X	X	X	
			1	10 to 20	5	SM- WDA-xxx- X	*Target Freq (%)*		100	100	100	100	100	100	100	100	-
						WDA-001- B	5		X	X	X	X	X	X	X	X	
						WDA-002- B	5		X	X	X	X	X	X	X	X	
						WDA-003- B	5		X	X	X	X	X	X	X	X	
						WDA-004- B	5	MS/MSD	X	X	X	X	X	X	X	X	
						WDA-005- B	5	***	X	X	X	X	X	X	X	X	
						WDA-105- B	5	Duplicate	D	D	D	D	D	D	D	D	
						WDA-006- B	5		X	X	X	X	X	X	X	X	
			1	10 to 20	N	SM- WDA-xxx- X	*Target Freq (%)*		100	100	-	-	-	-	-	-	-
						WDA-001- C	N		X	X							
						WDA-002- C	N		X	X							
						WDA-003- C	N		X	X							
						WDA-004- C	N	MS/MSD	X	X							
						WDA-005- C	N	***	X	X							
						WDA-105- C	N	Duplicate	D	D							
						WDA-006- C	N		X	X							
	North of WDA	4	2	3	0, 2	SM- WNO-xxx- X	*Target Freq (%)*		100	100	-	-	-	-	-	-	-
						WNO-001- A	0		X	X							
						" B	2		X	X							
						WNO-002- A	0		X	X							
						" B	2		X	X							
						WNO-003- A	0		X	X							
						" B	2		X	X							
						WNO-004- A	0		X	X							
						" B	2		X	X							
	East Bank of OID	6	4	15 to 20	0, 5, 10, N	SM- ODE-xxx- X	*Target Freq (%)*		100	100	-	-	-	-	-	-	-
						ODE-001- A	0		X	X							
						" B	5		X	X							
						" C	10		X	X							
						" D	N		X	X							
						ODE-002- A	0		X	X							
						" B	5		X	X							
						" C	10		X	X							
						" D	N		X	X							
						ODE-003- A	0		X	X							
						" B	5		X	X							
						" C	10		X	X							
						" D	N		X	X							
						ODE-004- A	0	***	X	X							
						" B	5	***	X	X							
						" C	10	***	X	X							
						" D	N	***	X	X							
						ODE-104- A	0	Duplicate	D	D							
						" B	5	Duplicate	D	D							
						" C	10	Duplicate	D	D							
						" D	N	Duplicate	D	D							
						ODE-005- A	0		X	X							
						" B	5		X	X							
						" C	10		X	X							
						" D	N		X	X							
						ODE-006- A	0		X	X							
						" B	5		X	X							
						" C	10		X	X							
						" D	N		X	X							

TABLE 5-3
Request for Analysis, Solid Matrix Samples
Halaco Site Remedial Investigation

Area	Subarea	No. of Sample Loca-tions	No. of Sample Depths/ Location	Boring Depth (feet, bgs)	Sample Depths (feet, bgs)	Sample ID	Depth (ft, bgs) *	QC Sample	Radionuclides	TAL Metals	TCL VOCs	TCL SVOC	TCL PCBs	WHO Dioxins	TPH-g	TPH-d	TOC and pH
								Lab	TBD	CLP					Region 9		TBD
								Temperature	4 degrees C								
								Preservative	TBD	-	-	-	-	-	-	-	-
								Container	TBD	1-8oz Jar	3-5gm Encore	1-8oz Jar	1-8oz Jar	1-8oz Jar	3-5gm Encore	1-8oz Jar	1-4oz Jar
								Holding Time, Extraction	TBD	-	-	14 days	14 days	14 days	-	14 days	
								Holding Time, Analysis	TBD	6 mths^	48 hrs	40 days	40 days	40 days	48 hrs	40 days	28 days
NCL East	Land, > 8' contour	21	1	Surface	0	SM- NEL-xxx- X	*Target Freq (%)*		100	100	-	-	-	-	-	-	5
						NEL-024- A	0		X	X							
						NEL-025- A	0		X	X							
						NEL-026- A	0		X	X							
						NEL-037- A	0		X	X							
						NEL-038- A	0		X	X							
						NEL-039- A	0	MS/MSD	X	X							
						NEL-040- A	0	***	X	X							
						NEL-140- A	0	Duplicate	D	D							
						NEL-041- A	0		X	X							
						NEL-042- A	0		X	X							
						NEL-043- A	0		X	X							
						NEL-051- A	0		X	X							
						NEL-052- A	0		X	X							
						NEL-055- A	0		X	X							
						NEL-056- A	0		X	X							X
						NEL-057- A	0		X	X							
						NEL-058- A	0		X	X							
						NEL-059- A	0		X	X							
						NEL-062- A	0		X	X							
						NEL-063- A	0		X	X							
						NEL-064- A	0		X	X							
						NEL-065- A	0		X	X							
	Land, < = 8' contour	40	2	3	0, 2	SM- NEL-xxx- X	*Target Freq (%)*		100	100	-	-	-	-	-	-	1
						NEL-001- A	0		X	X							
						" B	2		X	X							
						NEL-002- A	0		X	X							
						" B	2		X	X							
						NEL-003- A	0		X	X							
						" B	2		X	X							
						NEL-004- A	0		X	X							
						" B	2		X	X							
						NEL-005- A	0		X	X							
						" B	2		X	X							
						NEL-006- A	0		X	X							
						" B	2		X	X							
						NEL-007- A	0		X	X							
						" B	2		X	X							
						NEL-008- A	0		X	X							
						" B	2		X	X							
						NEL-009- A	0	MS/MSD	X	X							
						" B	2	MS/MSD	X	X							
						NEL-010- A	0	***	X	X							
						" B	2	***	X	X							
						NEL-110- A	0	Duplicate	D	D							
						" B	2	Duplicate	D	D							
						NEL-011- A	0		X	X							
						" B	2		X	X							
						NEL-012- A	0		X	X							
						" B	2		X	X							
						NEL-013- A	0		X	X							
						" B	2		X	X							
						NEL-014- A	0		X	X							
						" B	2		X	X							
						NEL-015- A	0		X	X							
						" B	2		X	X							
						NEL-016- A	0		X	X							
						" B	2		X	X							
						NEL-017- A	0		X	X							X
						" B	2		X	X							X
						NEL-018- A	0		X	X							
						" B	2		X	X							
						NEL-019- A	0		X	X							
						" B	2		X	X							
						NEL-020- A	0	***	X	X							
						" B	2	***	X	X							
						NEL-120- A	0	Duplicate	D	D							
						" B	2	Duplicate	D	D							
						NEL-021- A	0		X	X							
						" B	2		X	X							
						NEL-022- A	0		X	X							
						" B	2		X	X							
						NEL-023- A	0		X	X							
						" B	2		X	X							
						NEL-027- A	0		X	X							
						" B	2		X	X							
						NEL-028- A	0		X	X							
						" B	2		X	X							
						NEL-029- A	0		X	X							
						" B	2		X	X							
						NEL-030- A	0	***	X	X							
						" B	2	***	X	X							
						NEL-130- A	0	Duplicate	D	D							
						" B	2	Duplicate	D	D							
						NEL-031- A	0		X	X							
						" B	2		X	X							
						NEL-032- A	0		X	X							
						" B	2		X	X							
						NEL-033- A	0		X	X							
						" B	2		X	X							
						NEL-034- A	0		X	X							
						" B	2		X	X							
						NEL-035- A	0		X	X							
						" B	2		X	X							
						NEL-036- A	0		X	X							
						" B	2		X	X							
						NEL-044- A	0		X	X							
						" B	2		X	X							
						NEL-045- A	0		X	X							
						" B	2		X	X							
						NEL-046- A	0		X	X							
						" B	2		X	X							
						NEL-047- A	0		X	X							

TABLE 5-3
Request for Analysis, Solid Matrix Samples
Halaco Site Remedial Investigation

Area	Subarea	No. of Sample Loca-tions	No. of Sample Depths/ Location	Boring Depth (feet, bgs)	Sample Depths (feet, bgs)	Sample ID	Depth (ft, bgs) *	QC Sample	Radionuclides	TAL Metals	TCL VOCs	TCL SVOC	TCL PCBs	WHO Dioxins	TPH-g	TPH-d	TOC and pH
								Lab	TBD	CLP					Region 9		TBD
								Temperature	4 degrees C								
								Preservative	TBD	-	-	-	-	-	-	-	-
								Container	TBD	1-8oz Jar	3-5gm Encore	1-8oz Jar	1-8oz Jar	1-8oz Jar	3-5gm Encore	1-8oz Jar	1-4oz Jar
								Holding Time, Extraction	TBD	-	-	14 days	14 days	14 days	-	14 days	
								Holding Time, Analysis	TBD	6 mths^	48 hrs	40 days	40 days	40 days	48 hrs	40 days	28 days
						" B	2		X	X							
						NEL-048- A	0		X	X							
						" B	2		X	X							
						NEL-049- A	0		X	X							
						" B	2		X	X							
						NEL-050- A	0	***	X	X							
						" B	2	****	X	X							
						NEL-150- A	0	Duplicate	D	D							
						" B	2	Duplicate	D	D							
	Land, > 8' contour	4	3	3	0, 0, 2	SM- NEL-xxx- X	*Target Freq (%)*		100	100	-	-	-	-	-	-	-
						NEL-053- A	0**		X	X							
						" B	0.1		X	X							
						" C	2		X	X							
						NEL-054- A	0**	MS/MSD	X	X							
						" B	0.1	MS/MSD	X	X							
						" C	2	MS/MSD	X	X							
						NEL-060- A	0**	***	X	X							
						" B	0.1	***	X	X							
						" C	2	***	X	X							
						NEL-160- A	0**	Duplicate	D	D							
						" B	0.1	Duplicate	D	D							
						" C	2	Duplicate	D	D							
						NEL-061- A	0**		X	X							
						" B	0.1		X	X							
						" C	2		X	X							
NCL North	Background	6	1	Surface	0	SM- NNB-xxx- X	*Target Freq (%)*		100	100	-	-	-	-	-	-	-
						NNB-001- A	0	MS/MSD	X	X							
						NNB-002- A	0	***	X	X							
						NNB-102- A	0	Duplicate	D	D							
						NNB-003- A	0		X	X							
						NNB-004- A	0		X	X							
						NNB-005- A	0		X	X							
						NNB-006- A	0		X	X							
	Pond	2	1	Surface	0	SM- NNP-xxx- X	*Target Freq (%)*		100	100	-	-	-	-	-	-	-
						NNP-001- A	0		X	X							
						NNP-002- A	0		X	X							
	Ditch north of WDA	4	1	Surface	0	SM- NND-xxx- X	*Target Freq (%)*		100	100	-	-	-	-	-	-	-
						NND-001- A	0		X	X							
						NND-002- A	0		X	X							
						NND-003- A	0		X	X							
						NND-004- A	0		X	X							
	Land	4	3	3	0, 0, 2	SM- NNL-xxx- X	*Target Freq (%)*		100	100	-	-	-	-	-	-	10
						NNL-001- A	0**	***	X	X							
						" B	0.1	***	X	X							
						" C	2	***	X	X							
						NNL-101- A	0**	Duplicate	D	D							
						" B	0.1	Duplicate	D	D							
						" C	2	Duplicate	D	D							
						NNL-002- A	0**		X	X							
						" B	0.1		X	X							X
						" C	2		X	X							X
						NNL-003- A	0**		X	X							
						" B	0.1		X	X							
						" C	2		X	X							
						NNL-004- A	0**		X	X							
						" B	0.1		X	X							
						" C	2		X	X							
Hueneme Parcel	East of Site	4	3	3	0, 0, 2	SM- HUP-xxx- X	*Target Freq (%)*		100	100	-	-	-	-	-	-	10
						HUP-001- A	0**		X	X							
						" B	0.1		X	X							
						" C	2		X	X							
						HUP-002- A	0**		X	X							
						" B	0.1		X	X							
						" C	2		X	X							
						HUP-003- A	0**		X	X							
						" B	0.1		X	X							X
						" C	2		X	X							X
						HUP-004- A	0**		X	X							
						" B	0.1		X	X							
						" C	2		X	X							
OID	Through Site	7	3	5	0, 2, 4	SM- OID-xxx- X	*Target Freq (%)*		100	100	50	50	50	50	50	50	-
						OID-001- A	0	***	X	X	X	X	X	X	X	X	
						" B	2	***	X	X	X	X	X	X	X	X	
						" C	4	***	X	X	X	X	X	X	X	X	
						OID-102- A	0	Duplicate	D	D	D	D	D	D	D	D	
						" B	2	Duplicate	D	D	D	D	D	D	D	D	
						" C	4	Duplicate	D	D	D	D	D	D	D	D	
						OID-002- A	0		X	X							
						" B	2		X	X							
						" C	4		X	X							
						OID-003- A	0	MS/MSD	X	X	X	X	X	X	X	X	
						" B	2	MS/MSD	X	X	X	X	X	X	X	X	
						" C	4	MS/MSD	X	X	X	X	X	X	X	X	
						OID-004- A	0		X	X							
						" B	2		X	X							
						" C	4		X	X							
						OID-005- A	0		X	X	X	X	X	X	X	X	
						" B	2		X	X	X	X	X	X	X	X	
						" C	4		X	X	X	X	X	X	X	X	
						OID-006- A	0		X	X							
						" B	2		X	X							
						" C	4		X	X							
						OID-007- A	0		X	X	X	X	X	X	X	X	
						" B	2		X	X	X	X	X	X	X	X	
						" C	4		X	X	X	X	X	X	X	X	
	North of Site	7	2	3	0,2	SM- OID-xxx- X	*Target Freq (%)*		100	100	50	50	50	50	50	50	-
						OID-008- A	0		X	X							
						" B	2		X	X							
						OID-009- A	0		X	X	X	X	X	X	X	X	
						" B	2		X	X	X	X	X	X	X	X	
						OID-010- A	0		X	X							
						" B	2		X	X							

TABLE 5-3
Request for Analysis, Solid Matrix Samples
Halaco Site Remedial Investigation

Area	Subarea	No. of Sample Loca-tions	No. of Sample Depths/ Location	Boring Depth (feet, bgs)	Sample Depths (feet, bgs)	Sample ID	Depth (ft, bgs) *	QC Sample	Radionuclides	TAL Metals	TCL VOCs	TCL SVOC	TCL PCBs	WHO Dioxins	TPH-g	TPH-d	TOC and pH
								Lab	TBD	CLP					Region 9		TBD
								Temperature	4 degrees C								
								Preservative	TBD	-	-	-	-	-	-	-	-
								Container	TBD	1-8oz Jar	3-5gm Encore	1-8oz Jar	1-8oz Jar	1-8oz Jar	3-5gm Encore	1-8oz Jar	1-4oz Jar
								Holding Time, Extraction	TBD	-	-	14 days	14 days	14 days	-	14 days	
								Holding Time, Analysis	TBD	6 mths^	48 hrs	40 days	40 days	40 days	48 hrs	40 days	28 days
						OID-011- A	0		X	X	X	X	X	X	X	X	
						" B	2		X	X	X	X	X	X	X	X	
						OID-012- A	0		X	X							
						" B	2		X	X							
						OID-013- A	0		X	X	X	X	X	X	X	X	
						" B	2		X	X	X	X	X	X	X	X	
						OID-014- A	0		X	X							
						" B	2		X	X							
Lagoon	Lagoon, main area	10	3	5	0, 2, 4	SM- LGM-xxx- X	*Target Freq (%)*		100	100	50	50	50	50	50	50	-
						LGM-001- A	0		X	X	X	X	X	X	X	X	
						" B	2		X	X	X	X	X	X	X	X	
						" C	4		X	X	X	X	X	X	X	X	
						LGM-002- A	0		X	X							
						" B	2		X	X							
						" C	4		X	X							
						LGM-003- A	0	***	X	X	X	X	X	X	X	X	
						" B	2	***	X	X	X	X	X	X	X	X	
						" C	4	***	X	X	X	X	X	X	X	X	
						LGM-103- A	0	Duplicate	D	D	D	D	D	D	D	D	
						" B	2	Duplicate	D	D	D	D	D	D	D	D	
						" C	4	Duplicate	D	D	D	D	D	D	D	D	
						LGM-004- A	0		X	X							
						" B	2		X	X							
						" C	4		X	X							
						LGM-005- A	0		X	X	X	X	X	X	X	X	
						" B	2		X	X	X	X	X	X	X	X	
						" C	4		X	X	X	X	X	X	X	X	
						LGM-006- A	0		X	X							
						" B	2		X	X							
						" C	4		X	X							
						LGM-007- A	0		X	X	X	X	X	X	X	X	
						" B	2		X	X	X	X	X	X	X	X	
						" C	4		X	X	X	X	X	X	X	X	
						LGM-008- A	0		X	X							
						" B	2		X	X							
						" C	4		X	X							
						LGM-009- A	0		X	X	X	X	X	X	X	X	
						" B	2		X	X	X	X	X	X	X	X	
						" C	4		X	X	X	X	X	X	X	X	
						LGM-010- A	0		X	X							
						" B	2		X	X							
						" C	4		X	X							
	Lagoon, fingers	12	2	3	0, 2	SM- LGF-xxx- X	*Target Freq (%)*		100	100	50	50	50	50	50	50	-
						LGF-001- A	0		X	X	X	X	X	X	X	X	
						" B	2		X	X	X	X	X	X	X	X	
						LGF-002- A	0		X	X							
						" B	2		X	X							
						LGF-003- A	0	***	X	X	X	X	X	X	X	X	
						" B	2	***	X	X	X	X	X	X	X	X	
						LGF-103- A	0	Duplicate	D	D	D	D	D	D	D	D	
						" B	2	Duplicate	D	D	D	D	D	D	D	D	
						LGF-004- A	0		X	X							
						" B	2		X	X							
						LGF-005- A	0	MS/MSD	X	X	X	X	X	X	X	X	
						" B	2	MS/MSD	X	X	X	X	X	X	X	X	
						LGF-006- A	0		X	X							
						" B	2		X	X							
						LGF-007- A	0		X	X	X	X	X	X	X	X	
						" B	2		X	X	X	X	X	X	X	X	
						LGF-008- A	0		X	X							
						" B	2		X	X							
						LGF-009- A	0		X	X	X	X	X	X	X	X	
						" B	2		X	X	X	X	X	X	X	X	
						LGF-010- A	0		X	X							
						" B	2		X	X							
						LGF-011- A	0		X	X	X	X	X	X	X	X	
						" B	2		X	X	X	X	X	X	X	X	
						LGF-012- A	0		X	X							
						" B	2		X	X							
Railroad Loading Dock	Loading dock	6	1	Surface	0	SM- RLD-xxx- X	*Target Freq (%)*		100	100	-	-	-	-	-	-	-
						RLD-001- A	0	***	X	X							
						RLD-101- A	0	Duplicate	D	D							
						RLD-002- A	0		X	X							
						RLD-003- A	0		X	X							
						RLD-004- A	0		X	X							
						RLD-005- A	0		X	X							
						RLD-006- A	0		X	X							
McWane Blvd East	Road	4	2	3	0, 2	SM- MBR-xxx- X	*Target Freq (%)*		100	100	-	-	-	-	-	-	-
						MBR-001- A	0	***	X	X							
						" B	2	***	X	X							
						MBR-101- A	0	Duplicate	D	D							
						" B	2	Duplicate	D	D							
						MBR-002- A	0		X	X							
						" B	2		X	X							
						MBR-003- A	0		X	X							
						" B	2		X	X							
						MBR-004- A	0		X	X							
						" B	2		X	X							
	South of road	4	2	3	0, 2	SM- MBS-xxx- X	*Target Freq (%)*		100	100	-	-	-	-	-	-	-
						MBS-001- A	0	MS/MSD	X	X							
						" B	2	MS/MSD	X	X							
						MBS-002- A	0		X	X							
						" B	2		X	X							
						MBS-003- A	0		X	X							
						" B	2		X	X							
						MBS-004- A	0		X	X							
						" B	2		X	X							
Wetland	Background	6	1	Surface	0	SM- WLB-xxx- X	*Target Freq (%)*		100	100	-	-	-	-	-	-	-
						WLB-001- A	0	***	X	X							
						WLB-101- A	0	Duplicate	D	D							
						WLB-002- A	0	MS/MSD	X	X							
						WLB-003- A	0		X	X							

TABLE 5-3
Request for Analysis, Solid Matrix Samples
Halaco Site Remedial Investigation

Area	Subarea	No. of Sample Loca-tions	No. of Sample Depths/ Location	Boring Depth (feet, bgs)	Sample Depths (feet, bgs)	Sample ID	Depth (ft, bgs) *	QC Sample	Radionuclides	TAL Metals	TCL VOCs	TCL SVOC	TCL PCBs	WHO Dioxins	TPH-g	TPH-d	TOC and pH
								Lab	TBD	CLP					Region 9		TBD
								Temperature	4 degrees C								
								Preservative	TBD	-	-	-	-	-	-	-	-
								Container	TBD	1-8oz Jar	3-5gm Encore	1-8oz Jar	1-8oz Jar	1-8oz Jar	3-5gm Encore	1-8oz Jar	1-4oz Jar
								Holding Time, Extraction	TBD	-	-	14 days	14 days	14 days	-	14 days	
								Holding Time, Analysis	TBD	6 mths^	48 hrs	40 days	40 days	40 days	48 hrs	40 days	28 days
						WLB-004- A	0		X	X							
						WLB-005- A	0		X	X							
						WLB-006- A	0		X	X							
	West Area	12	2	3	0, 2	SM- WLW-xxx- X	*Target Freq (%)*		100	100	-	-	-	-	-	-	-
						WLW-001- A	0	***	X	X							
						" B	2	***	X	X							
						WLW-101- A	0	Duplicate	D	D							
						" B	2	Duplicate	D	D							
						WLW-002- A	0	MS/MSD	X	X							
						" B	2	MS/MSD	X	X							
						WLW-003- A	0		X	X							
						" B	2		X	X							
						WLW-004- A	0		X	X							
						" B	2		X	X							
						WLW-005- A	0		X	X							
						" B	2		X	X							
						WLW-006- A	0		X	X							
						" B	2		X	X							
						WLW-007- A	0		X	X							
						" B	2		X	X							
						WLW-008- A	0		X	X							
						" B	2		X	X							
						WLW-009- A	0		X	X							
						" B	2		X	X							
						WLW-010- A	0		X	X							
						" B	2		X	X							
						WLW-011- A	0		X	X							
						" B	2		X	X							
						WLW-012- A	0		X	X							
						" B	2		X	X							
	East Area	8	2	3	0, 2	SM- WLE-xxx- X	*Target Freq (%)*		100	100	-	-	-	-	-	-	-
						WLE-001- A	0	***	X	X							
						" B	2	***	X	X							
						WLE-101- A	0	Duplicate	D	D							
						" B	2	Duplicate	D	D							
						WLE-002- A	0		X	X							
						" B	2		X	X							
						WLE-003- A	0		X	X							
						" B	2		X	X							
						WLE-004- A	0		X	X							
						" B	2		X	X							
						WLE-005- A	0		X	X							
						" B	2		X	X							
						WLE-006- A	0		X	X							
						" B	2		X	X							
						WLE-007- A	0		X	X							
						" B	2		X	X							
						WLE-008- A	0		X	X							
						" B	2		X	X							
	Ditch south of WMU	8	3	5	0, 2, 4	SM- DSA-xxx- X	*Target Freq (%)*		100	100	-	-	-	-	-	-	-
						DSA-001- A	0		X	X							
						" B	2		X	X							
						" C	4		X	X							
						DSA-002- A	0		X	X							
						" B	2		X	X							
						" C	4		X	X							
						DSA-003- A	0		X	X							
						" B	2		X	X							
						" C	4		X	X							
						DSA-004- A	0	***	X	X							
						" B	2	***	X	X							
						" C	4	***	X	X							
						DSA-104- A	0	Duplicate	D	D							
						" B	2	Duplicate	D	D							
						" C	4	Duplicate	D	D							
						DSA-005- A	0	MS/MSD	X	X							
						" B	2	MS/MSD	X	X							
						" C	4	MS/MSD	X	X							
						DSA-006- A	0		X	X							
						" B	2		X	X							
						" C	4		X	X							
						DSA-007- A	0		X	X							
						" B	2		X	X							
						" C	4		X	X							
						DSA-008- A	0		X	X							
						" B	2		X	X							
						" C	4		X	X							
	5' south of Ditch	8	2	3	0, 2	SM- DSB-xxx- X	*Target Freq (%)*		100	100	-	-	-	-	-	-	-
						DSB-001- A	0		X	X							
						" B	2		X	X							
						DSB-002- A	0		X	X							
						" B	2		X	X							
						DSB-003- A	0		X	X							
						" B	2		X	X							
						DSB-004- A	0	***	X	X							
						" B	2	***	X	X							
						DSB-104- A	0	Duplicate	D	D							
						" B	2	Duplicate	D	D							
						DSB-005- A	0		X	X							
						" B	2		X	X							
						DSB-006- A	0		X	X							
						" B	2		X	X							
						DSB-007- A	0		X	X							
						" B	2		X	X							
						DSB-008- A	0		X	X							
						" B	2		X	X							
	15' south of Ditch	8	2	3	0, 2	SM- DSC-xxx- X	*Target Freq (%)*		100	100	-	-	-	-	-	-	-
						DSC-001- A	0		X	X							
						" B	2		X	X							
						DSC-002- A	0		X	X							
						" B	2		X	X							
						DSC-003- A	0		X	X							

TABLE 5-3
Request for Analysis, Solid Matrix Samples
Halaco Site Remedial Investigation

Area	Subarea	No. of Sample Loca-tions	No. of Sample Depths/ Location	Boring Depth (feet, bgs)	Sample Depths (feet, bgs)	Sample ID	Depth (ft, bgs) *	QC Sample	Radionuclides	TAL Metals	TCL VOCs	TCL SVOC	TCL PCBs	WHO Dioxins	TPH-g	TPH-d	TOC and pH
								Lab	**TBD**	**CLP**					**Region 9**		**TBD**
								Temperature	4 degrees C								
								Preservative	TBD	-	-	-	-	-	-	-	-
								Container	TBD	1-8oz Jar	3-5gm Encore	1-8oz Jar	1-8oz Jar	1-8oz Jar	3-5gm Encore	1-8oz Jar	1-4oz Jar
								Holding Time, Extraction	TBD	-	-	14 days	14 days	14 days	-	14 days	
								Holding Time, Analysis	TBD	6 mths^	48 hrs	40 days	40 days	40 days	48 hrs	40 days	28 days
						" B	2		X	X							
						DSC-004- A	0		X	X							
						" B	2		X	X							
						DSC-005- A	0		X	X							
						" B	2		X	X							
						DSC-006- A	0		X	X							
						" B	2		X	X							
						DSC-007- A	0		X	X							
						" B	2		X	X							
						DSC-008- A	0		X	X							
						" B	2		X	X							
Beach Dunes	Background	6	1	Surface	0	SM- BBG-xxx- X	*Target Freq (%)*		100	100	-	-	-	-	-	-	-
						BBG-001- A	0	***	X	X							
						BBG-101- A	0	Duplicate	D	D							
						BBG-002- A	0	MS/MSD	X	X							
						BBG-003- A	0		X	X							
						BBG-004- A	0		X	X							
						BBG-005- A	0		X	X							
						BBG-006- A	0		X	X							
	Breaches	6	4	10 to 15	0', 2', 4', 6' Elev.	SM- BBR-xxx- X	*Target Freq (%)*		100	100	-	-	-	-	-	-	-
						BBG-001- A	tbd		X	X							
						" B	tbd		X	X							
						" C	tbd		X	X							
						" D	tbd		X	X							
						BBG-002- A	tbd	***	X	X							
						" B	tbd	***	X	X							
						" C	tbd	***	X	X							
						" D	tbd	***	X	X							
						BBG-102- A	tbd	Duplicate	D	D							
						" B	tbd	Duplicate	D	D							
						" C	tbd	Duplicate	D	D							
						" D	tbd	Duplicate	D	D							
						BBG-003- A	tbd	MS/MSD	X	X							
						" B	tbd	MS/MSD	X	X							
						" C	tbd	MS/MSD	X	X							
						" D	tbd	MS/MSD	X	X							
						BBG-004- A	tbd		X	X							
						" B	tbd		X	X							
						" C	tbd		X	X							
						" D	tbd		X	X							
						BBG-005- A	tbd		X	X							
						" B	tbd		X	X							
						" C	tbd		X	X							
						" D	tbd		X	X							
						BBG-006- A	tbd		X	X							
						" B	tbd		X	X							
						" C	tbd		X	X							
						" D	tbd		X	X							

Notes: (*) Sample depths at top of sample interval. Sample intervals are 0.5' long.
(**) = Sample interval specifically from 0.0' to 0.1'.
(***) = Collect Duplicate sample.
(^) = Holding time for metals is 6 months, except for mercury which is 28 days.

PRIMARY SAMPLES - QUANTITY

Smelter Parcel	North Area, shallow	10	2	3	0, 2	SM- SPN-xxx- X			20	20	4	4	-	-	4	4	-
	North Area, deep	2	5	15 to 25	0, 5, 10, OW, N	SM- SPN-xxx- X			10	10	-	-	-	-	-	-	-
	Parking Area	4	2	3	0, 2	SM- SPP-xxx- X			8	8	4	4	-	-	4	4	-
	Smelter and SE Area	27	5	15 to 25	0, 5, 10, OW, N	SM- SPS-xxx- X			135	135	75	75	35	35	75	75	-
Waste Mgt Area	WMU	9	2	40 to 50	0, 5	SM- WMU-xxx- X			-	18	18	18	18	18	18	18	-
			3	40 to 50	30, 35, N	SM- WMU-xxx- X			27	27	12	12	6	6	12	12	-
	WDA	6	1	10 to 20	0	SM- WDA-xxx- X			-	6	6	6	6	6	6	6	-
			1	10 to 20	5	SM- WDA-xxx- X			6	6	6	6	6	6	6	6	-
			1	10 to 20	N	SM- WDA-xxx- X			6	6	-	-	-	-	-	-	-
	0 North of WDA	4	2	3	0, 2	SM- WNO-xxx- X			8	8	-	-	-	-	-	-	-
	East Bank of OID	6	4	15 to 20	0, 5, 10, N	SM- ODE-xxx- X			24	24	-	-	-	-	-	-	-
NCL East	Land, > 8' contour	21	1	Surface	0	SM- NEL-xxx- X			21	21	-	-	-	-	-	-	1
	Land, < = 8' contour	40	2	3	0, 2	SM- NEL-xxx- X			80	80	-	-	-	-	-	-	2
	Land, > 8' contour	4	3	3	0, 0, 2	SM- NEL-xxx- X			12	12	-	-	-	-	-	-	-
NCL North	Background	6	1	Surface	0	SM- NNB-xxx- X			6	6	-	-	-	-	-	-	-
	Pond	2	1	Surface	0	SM- NNP-xxx- X			2	2	-	-	-	-	-	-	-
	Ditch north of WDA	4	1	Surface	0	SM- NND-xxx- X			4	4	-	-	-	-	-	-	-
	Land	4	3	3	0, 0, 2	SM- NNL-xxx- X			12	12	-	-	-	-	-	-	2
Hueneme	Parcel	4	3	3	0, 0, 2	SM- HUP-xxx- X			12	12	-	-	-	-	-	-	2
OID	Through Site	7	3	5	0, 2, 4	SM- OID-xxx- X			21	21	12	12	12	12	12	12	-
	North of Site	7	2	3	0,2	SM- OID-xxx- X			14	14	6	6	6	6	6	6	-
Lagoon	Lagoon, main area	10	3	5	0, 2, 4	SM- LGM-xxx- X			30	30	15	15	15	15	15	15	-
	Lagoon, fingers	12	2	3	0, 2	SM- LGF-xxx- X			24	24	12	12	12	12	12	12	-
Railroad	Loading dock	6	1	Surface	0	SM- RLD-xxx- X			6	6	-	-	-	-	-	-	-
McWane Blvd East	Road	4	2	3	0, 2	SM- MBR-xxx- X			8	8	-	-	-	-	-	-	-
	South of road	4	2	3	0, 2	SM- MBS-xxx- X			8	8	-	-	-	-	-	-	-
Wetland	Background	6	1	Surface	0	SM- WLB-xxx- X			6	6	-	-	-	-	-	-	-
	West Area	12	2	3	0, 2	SM- WLW-xxx- X			24	24	-	-	-	-	-	-	-
	East Area	8	2	3	0, 2	SM- WLE-xxx- X			16	16	-	-	-	-	-	-	-
	Ditch south of WMU	8	3	5	0, 2, 4	SM- DSA-xxx- X			24	24	-	-	-	-	-	-	-
	5' south of Ditch	8	2	3	0, 2	SM- DSB-xxx- X			16	16	-	-	-	-	-	-	-
	15' south of Ditch	8	2	3	0, 2	SM- DSC-xxx- X			16	16	-	-	-	-	-	-	-
Beach Dunes	Background	6	1	Surface	0	SM- BBG-xxx- X			6	6	-	-	-	-	-	-	-
	Breaches	6	4	10 to 15	0', 2', 4', 6' Elev.	SM- BBR-xxx- X			24	24	-	-	-	-	-	-	-
Total									**636**	**660**	**170**	**170**	**116**	**116**	**170**	**170**	**7**

TABLE 5-3
Request for Analysis, Solid Matrix Samples
Halaco Site Remedial Investigation

Area	Subarea	No. of Sample Loca-tions	No. of Sample Depths/ Location	Boring Depth (feet, bgs)	Sample Depths (feet, bgs)	Sample ID	Depth (ft, bgs) *	QC Sample	Radionuclides	TAL Metals	TCL VOCs	TCL SVOC	TCL PCBs	WHO Dioxins	TPH-g	TPH-d	TOC and pH
								Lab	TBD	CLP					Region 9		TBD
								Temperature	4 degrees C								
								Preservative	TBD	-	-	-	-	-	-	-	-
								Container	TBD	1-8oz Jar	3-5gm Encore	1-8oz Jar	1-8oz Jar	1-8oz Jar	3-5gm Encore	1-8oz Jar	1-4oz Jar
								Holding Time, Extraction	TBD	-	-	14 days	14 days	14 days	-	14 days	
								Holding Time, Analysis	TBD	6 mths^	48 hrs	40 days	40 days	40 days	48 hrs	40 days	28 days
PRIMARY SAMPLES - TARGET FREQUENCY (%)																	
Smelter Parcel	North Area, shallow	10	2	3	0, 2	SM- SPN-xxx- X			100	100	25	25	-	-	25	25	-
	North Area, deep	2	5	15 to 25	0, 5, 10, OW, N	SM- SPN-xxx- X			100	100	25	25	-	-	25	25	-
	Parking Area	4	2	3	0, 2	SM- SPP-xxx- X			100	100	50	50	-	-	50	50	-
	Smelter and SE Area	27	5	15 to 25	0, 5, 10, OW, N	SM- SPS-xxx- X			100	100	50	50	25	25	50	50	-
Waste Mgt Area	WMU	9	2	40 to 50	0, 5	SM- WMU-xxx- X			-	100	100	100	100	100	100	100	-
			3	40 to 50	30, 35, N	SM- WMU-xxx- X			100	100	50	50	25	25	50	50	-
	WDA	6	1	10 to 20	0	SM- WDA-xxx- X			-	100	100	100	100	100	100	100	-
			1	10 to 20	5	SM- WDA-xxx- X			100	100	100	100	100	100	100	100	-
			1	10 to 20	N	SM- WDA-xxx- X			100	100	-	-	-	-	-	-	-
	North of WDA	4	2	3	0, 2	SM- WNO-xxx- X			100	100	-	-	-	-	-	-	-
	East Bank of OID	6	4	15 to 20	0, 5, 10, N	SM- ODE-xxx- X			100	100	-	-	-	-	-	-	-
NCL East	Land, > 8' contour	21	1	Surface	0	SM- NEL-xxx- X			100	100	-	-	-	-	-	-	5
	Land, < = 8' contour	40	2	3	0, 2	SM- NEL-xxx- X			100	100	-	-	-	-	-	-	1
	Land, > 8' contour	4	3	3	0, 0, 2	SM- NEL-xxx- X			100	100	-	-	-	-	-	-	-
NCL North	Background	6	1	Surface	0	SM- NNB-xxx- X			100	100	-	-	-	-	-	-	-
	Pond	2	1	Surface	0	SM- NNP-xxx- X			100	100	-	-	-	-	-	-	-
	Ditch north of WDA	4	1	Surface	0	SM- NND-xxx- X			100	100	-	-	-	-	-	-	-
	Land	4	3	3	0, 0, 2	SM- NNL-xxx- X			100	100	-	-	-	-	-	-	10
Hueneme	Parcel	4	3	3	0, 0, 2	SM- HUP-xxx- X			100	100	-	-	-	-	-	-	10
OID	Through Site	7	3	5	0, 2, 4	SM- OID-xxx- X			100	100	50	50	50	50	50	50	-
	North of Site	7	2	3	0,2	SM- OID-xxx- X			100	100	50	50	50	50	50	50	-
Lagoon	Lagoon, main area	10	3	5	0, 2, 4	SM- LGM-xxx- X			100	100	50	50	50	50	50	50	-
	Lagoon, fingers	12	2	3	0, 2	SM- LGF-xxx- X			100	100	50	50	50	50	50	50	-
Railroad	Loading dock	6	1	Surface	0	SM- RLD-xxx- X			100	100	-	-	-	-	-	-	-
McWane Blvd East	Road	4	2	3	0, 2	SM- MBR-xxx- X			100	100	-	-	-	-	-	-	-
	South of road	4	2	3	0, 2	SM- MBS-xxx- X			100	100	-	-	-	-	-	-	-
Wetland	Background	6	1	Surface	0	SM- WLB-xxx- X			100	100	-	-	-	-	-	-	-
	West Area	12	2	3	0, 2	SM- WLW-xxx- X			100	100	-	-	-	-	-	-	-
	East Area	8	2	3	0, 2	SM- WLE-xxx- X			100	100	-	-	-	-	-	-	-
	Ditch south of WMU	8	3	5	0, 2, 4	SM- DSA-xxx- X			100	100	-	-	-	-	-	-	-
	5' south of Ditch	8	2	3	0, 2	SM- DSB-xxx- X			100	100	-	-	-	-	-	-	-
	15' south of Ditch	8	2	3	0, 2	SM- DSC-xxx- X			100	100	-	-	-	-	-	-	-
Beach Dunes	Background	6	1	Surface	0	SM- BBG-xxx- X			100	100	-	-	-	-	-	-	-
	Breaches	6	4	10 to 15	0', 2', 4', 6' Elev.	SM- BBR-xxx- X			100	100	-	-	-	-	-	-	-
PRIMARY SAMPLES - ACTUAL FREQUENCY (%)																	
Smelter Parcel	North Area, shallow	10	2	3	0, 2	SM- SPN-xxx- X			100%	100%	20%	20%	-	-	20%	20%	-
	North Area, deep	2	5	15 to 25	0, 5, 10, OW, N	SM- SPN-xxx- X			100%	100%	-	-	-	-	-	-	-
	Parking Area	4	2	3	0, 2	SM- SPP-xxx- X			100%	100%	50%	50%	-	-	50%	50%	-
	Smelter and SE Area	27	5	15 to 25	0, 5, 10, OW, N	SM- SPS-xxx- X			100%	100%	56%	56%	26%	26%	56%	56%	-
Waste Mgt Area	WMU	9	2	40 to 50	0, 5	SM- WMU-xxx- X			-	100%	100%	100%	100%	100%	100%	100%	-
			3	40 to 50	30, 35, N	SM- WMU-xxx- X			100%	100%	44%	44%	22%	22%	44%	44%	-
	WDA	6	1	10 to 20	0	SM- WDA-xxx- X			-	100%	100%	100%	100%	100%	100%	100%	-
			1	10 to 20	5	SM- WDA-xxx- X			100%	100%	100%	100%	100%	100%	100%	100%	-
			1	10 to 20	N	SM- WDA-xxx- X			100%	100%	-	-	-	-	-	-	-
	North of WDA	4	2	3	0, 2	SM- WNO-xxx- X			100%	100%	-	-	-	-	-	-	-
	East Bank of OID	6	4	15 to 20	0, 5, 10, N	SM- ODE-xxx- X			100%	100%	-	-	-	-	-	-	-
NCL East	Land, > 8' contour	21	1	Surface	0	SM- NEL-xxx- X			100%	100%	-	-	-	-	-	-	5%
	Land, < = 8' contour	40	2	3	0, 2	SM- NEL-xxx- X			100%	100%	-	-	-	-	-	-	3%
	Land, > 8' contour	4	3	3	0, 0, 2	SM- NEL-xxx- X			100%	100%	-	-	-	-	-	-	-
NCL North	Background	6	1	Surface	0	SM- NNB-xxx- X			100%	100%	-	-	-	-	-	-	-
	Pond	2	1	Surface	0	SM- NNP-xxx- X			100%	100%	-	-	-	-	-	-	-
	Ditch north of WDA	4	1	Surface	0	SM- NND-xxx- X			100%	100%	-	-	-	-	-	-	-
	Land	4	3	3	0, 0, 2	SM- NNL-xxx- X			100%	100%	-	-	-	-	-	-	17%
Hueneme	Parcel	4	3	3	0, 0, 2	SM- HUP-xxx- X			100%	100%	-	-	-	-	-	-	17%
OID	Through Site	7	3	5	0, 2, 4	SM- OID-xxx- X			100%	100%	57%	57%	57%	57%	57%	57%	-
	North of Site	7	2	3	0,2	SM- OID-xxx- X			100%	100%	43%	43%	43%	43%	43%	43%	-
Lagoon	Lagoon, main area	10	3	5	0, 2, 4	SM- LGM-xxx- X			100%	100%	50%	50%	50%	50%	50%	50%	-
	Lagoon, fingers	12	2	3	0, 2	SM- LGF-xxx- X			100%	100%	50%	50%	50%	50%	50%	50%	-
Railroad	Loading dock	6	1	Surface	0	SM- RLD-xxx- X			100%	100%	-	-	-	-	-	-	-
McWane Blvd East	Road	4	2	3	0, 2	SM- MBR-xxx- X			100%	100%	-	-	-	-	-	-	-
	South of road	4	2	3	0, 2	SM- MBS-xxx- X			100%	100%	-	-	-	-	-	-	-
Wetland	Background	6	1	Surface	0	SM- WLB-xxx- X			100%	100%	-	-	-	-	-	-	-
	West Area	12	2	3	0, 2	SM- WLW-xxx- X			100%	100%	-	-	-	-	-	-	-
	East Area	8	2	3	0, 2	SM- WLE-xxx- X			100%	100%	-	-	-	-	-	-	-
	Ditch south of WMU	8	3	5	0, 2, 4	SM- DSA-xxx- X			100%	100%	-	-	-	-	-	-	-
	5' south of Ditch	8	2	3	0, 2	SM- DSB-xxx- X			100%	100%	-	-	-	-	-	-	-
	15' south of Ditch	8	2	3	0, 2	SM- DSC-xxx- X			100%	100%	-	-	-	-	-	-	-
Beach Dunes	Background	6	1	Surface	0	SM- BBG-xxx- X			100%	100%	-	-	-	-	-	-	-
	Breaches	6	4	10 to 15	0', 2', 4', 6' Elev.	SM- BBR-xxx- X			100%	100%	-	-	-	-	-	-	-

TABLE 5-3
Request for Analysis, Solid Matrix Samples
Halaco Site Remedial Investigation

Area	Subarea	No. of Sample Loca-tions	No. of Sample Depths/ Location	Boring Depth (feet, bgs)	Sample Depths (feet, bgs)	Sample ID	Depth (ft, bgs) *	QC Sample	Radionuclides	TAL Metals	TCL VOCs	TCL SVOC	TCL PCBs	WHO Dioxins	TPH-g	TPH-d	TOC and pH
								Lab	TBD	CLP					Region 9		TBD
								Temperature	4 degrees C								
								Preservative	TBD	-	-	-	-	-	-	-	-
								Container	TBD	1-8oz Jar	3-5gm Encore	1-8oz Jar	1-8oz Jar	1-8oz Jar	3-5gm Encore	1-8oz Jar	1-4oz Jar
								Holding Time, Extraction	TBD	-	-	14 days	14 days	14 days	-	14 days	
								Holding Time, Analysis	TBD	6 mths^	48 hrs	40 days	40 days	40 days	48 hrs	40 days	28 days
DUPLICATE SAMPLES - QUANTITY																	
Smelter Parcel	North Area, shallow	10	2	3	0, 2	SM- SPN-xxx- X			2	2	2	2	-	-	2	2	-
	North Area, deep	2	5	15 to 25	0, 5, 10, OW, N	SM- SPN-xxx- X			5	5	-	-	-	-	-	-	-
	Parking Area	4	2	3	0, 2	SM- SPP-xxx- X			-	-	-	-	-	-	-	-	-
	Smelter and SE Area	27	5	15 to 25	0, 5, 10, OW, N	SM- SPS-xxx- X			10	10	10	10	5	5	10	10	-
Waste Mgt Area	WMU	9	2	40 to 50	0, 5	SM- WMU-xxx- X			-	2	2	2	2	2	2	2	-
			3	40 to 50	30, 35, N	SM- WMU-xxx- X			3	3	-	-	-	-	-	-	-
	WDA	6	1	10 to 20	0	SM- WDA-xxx- X			-	1	1	1	1	1	1	1	-
			1	10 to 20	5	SM- WDA-xxx- X			1	1	1	1	1	1	1	1	-
			1	10 to 20	N	SM- WDA-xxx- X			1	1	-	-	-	-	-	-	-
	North of WDA	4	2	3	0, 2	SM- WNO-xxx- X			-	-	-	-	-	-	-	-	-
	East Bank of OID	6	4	15 to 20	0, 5, 10, N	SM- ODE-xxx- X			4	4	-	-	-	-	-	-	-
NCL East	Land, > 8' contour	21	1	Surface	0	SM- NEL-xxx- X			1	1	-	-	-	-	-	-	-
	Land, < = 8' contour	40	2	3	0, 2	SM- NEL-xxx- X			8	8	-	-	-	-	-	-	-
	Land, > 8' contour	4	3	3	0, 0, 2	SM- NEL-xxx- X			3	3	-	-	-	-	-	-	-
NCL North	Background	6	1	Surface	0	SM- NNB-xxx- X			1	1	-	-	-	-	-	-	-
	Pond	2	1	Surface	0	SM- NNP-xxx- X			-	-	-	-	-	-	-	-	-
	Ditch north of WDA	4	1	Surface	0	SM- NND-xxx- X			-	-	-	-	-	-	-	-	-
	Land	4	3	3	0, 0, 2	SM- NNL-xxx- X			3	3	-	-	-	-	-	-	-
Hueneme OID	Parcel	4	3	3	0, 0, 2	SM- HUP-xxx- X			-	-	-	-	-	-	-	-	-
	Through Site	7	3	5	0, 2, 4	SM- OID-xxx- X			3	3	3	3	3	3	3	3	-
	North of Site	7	2	3	0,2	SM- OID-xxx- X			-	-	-	-	-	-	-	-	-
Lagoon	Lagoon, main area	10	3	5	0, 2, 4	SM- LGM-xxx- X			3	3	3	3	3	3	3	3	-
	Lagoon, fingers	12	2	3	0, 2	SM- LGF-xxx- X			2	2	2	2	2	2	2	2	-
Railroad McWane	Loading dock	6	1	Surface	0	SM- RLD-xxx- X			1	1	-	-	-	-	-	-	-
	Road	4	2	3	0, 2	SM- MBR-xxx- X			2	2	-	-	-	-	-	-	-
Blvd East	South of road	4	2	3	0, 2	SM- MBS-xxx- X			-	-	-	-	-	-	-	-	-
Wetland	Background	6	1	Surface	0	SM- WLB-xxx- X			1	1	-	-	-	-	-	-	-
	West Area	12	2	3	0, 2	SM- WLW-xxx- X			2	2	-	-	-	-	-	-	-
	East Area	8	2	3	0, 2	SM- WLE-xxx- X			2	2	-	-	-	-	-	-	-
	Ditch south of WMU	8	3	5	0, 2, 4	SM- DSA-xxx- X			3	3	-	-	-	-	-	-	-
	5' south of Ditch	8	2	3	0, 2	SM- DSB-xxx- X			2	2	-	-	-	-	-	-	-
	15' south of Ditch	8	2	3	0, 2	SM- DSC-xxx- X			-	-	-	-	-	-	-	-	-
Beach Dunes	Background	6	1	Surface	0	SM- BBG-xxx- X			1	1	-	-	-	-	-	-	-
	Breaches	6	4	10 to 15	0', 2', 4', 6' Elev.	SM- BBR-xxx- X			4	4	-	-	-	-	-	-	-
Total									**68**	**71**	**24**	**24**	**17**	**17**	**24**	**24**	**-**
MS/MSD EXTRA VOLUME - QUANTITY																	
Smelter Parcel	North Area, shallow	10	2	3	0, 2	SM- SPN-xxx- X			2	2	2	2	-	-	2	2	-
	North Area, deep	2	5	15 to 25	0, 5, 10, OW, N	SM- SPN-xxx- X			-	-	-	-	-	-	-	-	-
	Parking Area	4	2	3	0, 2	SM- SPP-xxx- X			-	-	-	-	-	-	-	-	-
	Smelter and SE Area	27	5	15 to 25	0, 5, 10, OW, N	SM- SPS-xxx- X			5	5	5	5	5	5	5	5	-
Waste Mgt Area	WMU	9	2	40 to 50	0, 5	SM- WMU-xxx- X			-	-	-	-	-	-	-	-	-
			3	40 to 50	30, 35, N	SM- WMU-xxx- X			-	-	-	-	-	-	-	-	-
	WDA	6	1	10 to 20	0	SM- WDA-xxx- X			-	1	1	1	1	1	1	1	-
			1	10 to 20	5	SM- WDA-xxx- X			1	1	1	1	1	1	1	1	-
			1	10 to 20	N	SM- WDA-xxx- X			1	1	-	-	-	-	-	-	-
	North of WDA	4	2	3	0, 2	SM- WNO-xxx- X			-	-	-	-	-	-	-	-	-
	East Bank of OID	6	4	15 to 20	0, 5, 10, N	SM- ODE-xxx- X			-	-	-	-	-	-	-	-	-
NCL East	Land, > 8' contour	21	1	Surface	0	SM- NEL-xxx- X			1	1	-	-	-	-	-	-	-
	Land, < = 8' contour	40	2	3	0, 2	SM- NEL-xxx- X			2	2	-	-	-	-	-	-	-
	Land, > 8' contour	4	3	3	0, 0, 2	SM- NEL-xxx- X			3	3	-	-	-	-	-	-	-
NCL North	Background	6	1	Surface	0	SM- NNB-xxx- X			1	1	-	-	-	-	-	-	-
	Pond	2	1	Surface	0	SM- NNP-xxx- X			-	-	-	-	-	-	-	-	-
	Ditch north of WDA	4	1	Surface	0	SM- NND-xxx- X			-	-	-	-	-	-	-	-	-
	Land	4	3	3	0, 0, 2	SM- NNL-xxx- X			-	-	-	-	-	-	-	-	-
Hueneme	Parcel	4	3	3	0, 0, 2	SM- HUP-xxx- X			-	-	-	-	-	-	-	-	-
OID	Through Site	7	3	5	0, 2, 4	SM- OID-xxx- X			3	3	3	3	3	3	3	3	-
	North of Site	7	2	3	0,2	SM- OID-xxx- X			-	-	-	-	-	-	-	-	-
Lagoon	Lagoon, main area	10	3	5	0, 2, 4	SM- LGM-xxx- X			-	-	-	-	-	-	-	-	-
	Lagoon, fingers	12	2	3	0, 2	SM- LGF-xxx- X			2	2	2	2	2	2	2	2	-
Railroad	Loading dock	6	1	Surface	0	SM- RLD-xxx- X			-	-	-	-	-	-	-	-	-
McWane	Road	4	2	3	0, 2	SM- MBR-xxx- X			-	-	-	-	-	-	-	-	-
Blvd East	South of road	4	2	3	0, 2	SM- MBS-xxx- X			2	2	-	-	-	-	-	-	-
Wetland	Background	6	1	Surface	0	SM- WLB-xxx- X			1	1	-	-	-	-	-	-	-
	West Area	12	2	3	0, 2	SM- WLW-xxx- X			2	2	-	-	-	-	-	-	-
	East Area	8	2	3	0, 2	SM- WLE-xxx- X			-	-	-	-	-	-	-	-	-
	Ditch south of WMU	8	3	5	0, 2, 4	SM- DSA-xxx- X			3	3	-	-	-	-	-	-	-
	5' south of Ditch	8	2	3	0, 2	SM- DSB-xxx- X			-	-	-	-	-	-	-	-	-
	15' south of Ditch	8	2	3	0, 2	SM- DSC-xxx- X			-	-	-	-	-	-	-	-	-
Beach Dunes	Background	6	1	Surface	0	SM- BBG-xxx- X			1	1	-	-	-	-	-	-	-
	Breaches	6	4	10 to 15	0', 2', 4', 6' Elev.	SM- BBR-xxx- X			4	4	-	-	-	-	-	-	-
Total									**34**	**35**	**14**	**14**	**12**	**12**	**14**	**14**	**-**

TABLE 5-3
Request for Analysis, Solid Matrix Samples
Halaco Site Remedial Investigation

Area	Subarea	No. of Sample Loca-tions	No. of Sample Depths/ Location	Boring Depth (feet, bgs)	Sample Depths (feet, bgs)	Sample ID	Depth (ft, bgs) *	QC Sample	Radionuclides	TAL Metals	TCL VOCs	TCL SVOC	TCL PCBs	WHO Dioxins	TPH-g	TPH-d	TOC and pH
								Lab	TBD	CLP					Region 9		TBD
								Temperature	4 degrees C								
								Preservative	TBD	-	-	-	-	-	-	-	-
								Container	TBD	1-8oz Jar	3-5gm Encore	1-8oz Jar	1-8oz Jar	1-8oz Jar	3-5gm Encore	1-8oz Jar	1-4oz Jar
								Holding Time, Extraction	TBD	-	-	14 days	14 days	14 days	-	14 days	
								Holding Time, Analysis	TBD	6 mths^	48 hrs	40 days	40 days	40 days	48 hrs	40 days	28 days
DUPLICATE SAMPLES - FREQUENCY (%)																	
Smelter Parcel	North Area, shallow	10	2	3	0, 2	SM- SPN-xxx- X			10.0%	10.0%	50.0%	50.0%	-	-	50.0%	50.0%	-
	North Area, deep	2	5	15 to 25	0, 5, 10, OW, N	SM- SPN-xxx- X			50.0%	50.0%	-	-	-	-	-	-	-
	Parking Area	4	2	3	0, 2	SM- SPP-xxx- X			-	-	-	-	-	-	-	-	-
	Smelter and SE Area	27	5	15 to 25	0, 5, 10, OW, N	SM- SPS-xxx- X			7.4%	7.4%	13.3%	13.3%	14.3%	14.3%	13.3%	13.3%	-
Waste Mgt Area	WMU	9	2	40 to 50	0, 5	SM- WMU-xxx- X			-	11.1%	11.1%	11.1%	11.1%	11.1%	11.1%	11.1%	-
			3	40 to 50	30, 35, N	SM- WMU-xxx- X			11.1%	11.1%	-	-	-	-	-	-	-
	WDA	6	1	10 to 20	0	SM- WDA-xxx- X			-	16.7%	16.7%	16.7%	16.7%	16.7%	16.7%	16.7%	-
			1	10 to 20	5	SM- WDA-xxx- X			16.7%	16.7%	16.7%	16.7%	16.7%	16.7%	16.7%	16.7%	-
			1	10 to 20	N	SM- WDA-xxx- X			16.7%	16.7%	-	-	-	-	-	-	-
	North of WDA	4	2	3	0, 2	SM- WNO-xxx- X			-	-	-	-	-	-	-	-	-
	East Bank of OID	6	4	15 to 20	0, 5, 10, N	SM- ODE-xxx- X			16.7%	16.7%	-	-	-	-	-	-	-
NCL East	Land, > 8' contour	21	1	Surface	0	SM- NEL-xxx- X			4.8%	4.8%	-	-	-	-	-	-	-
	Land, < = 8' contour	40	2	3	0, 2	SM- NEL-xxx- X			10.0%	10.0%	-	-	-	-	-	-	-
	Land, > 8' contour	4	3	3	0, 0, 2	SM- NEL-xxx- X			25.0%	25.0%	-	-	-	-	-	-	-
NCL North	Background	6	1	Surface	0	SM- NNB-xxx- X			16.7%	16.7%	-	-	-	-	-	-	-
	Pond	2	1	Surface	0	SM- NNP-xxx- X			-	-	-	-	-	-	-	-	-
	Ditch north of WDA	4	1	Surface	0	SM- NND-xxx- X			-	-	-	-	-	-	-	-	-
	Land	4	3	3	0, 0, 2	SM- NNL-xxx- X			25.0%	25.0%	-	-	-	-	-	-	-
Hueneme	Parcel	4	3	3	0, 0, 2	SM- HUP-xxx- X			-	-	-	-	-	-	-	-	-
OID	Through Site	7	3	5	0, 2, 4	SM- OID-xxx- X			14.3%	14.3%	25.0%	25.0%	25.0%	25.0%	25.0%	25.0%	-
	North of Site	7	2	3	0,2	SM- OID-xxx- X			-	-	-	-	-	-	-	-	-
Lagoon	Lagoon, main area	10	3	5	0, 2, 4	SM- LGM-xxx- X			10.0%	10.0%	20.0%	20.0%	20.0%	20.0%	20.0%	20.0%	-
	Lagoon, fingers	12	2	3	0, 2	SM- LGF-xxx- X			8.3%	8.3%	16.7%	16.7%	16.7%	16.7%	16.7%	16.7%	-
Railroad	Loading dock	6	1	Surface	0	SM- RLD-xxx- X			16.7%	16.7%	-	-	-	-	-	-	-
McWane Blvd East	Road	4	2	3	0, 2	SM- MBR-xxx- X			25.0%	25.0%	-	-	-	-	-	-	-
	South of road	4	2	3	0, 2	SM- MBS-xxx- X			-	-	-	-	-	-	-	-	-
Wetland	Background	6	1	Surface	0	SM- WLB-xxx- X			16.7%	16.7%	-	-	-	-	-	-	-
	West Area	12	2	3	0, 2	SM- WLW-xxx- X			8.3%	8.3%	-	-	-	-	-	-	-
	East Area	8	2	3	0, 2	SM- WLE-xxx- X			12.5%	12.5%	-	-	-	-	-	-	-
	Ditch south of WMU	8	3	5	0, 2, 4	SM- DSA-xxx- X			12.5%	12.5%	-	-	-	-	-	-	-
	5' south of Ditch	8	2	3	0, 2	SM- DSB-xxx- X			12.5%	12.5%	-	-	-	-	-	-	-
	15' south of Ditch	8	2	3	0, 2	SM- DSC-xxx- X			-	-	-	-	-	-	-	-	-
Beach Dunes	Background	6	1	Surface	0	SM- BBG-xxx- X			16.7%	16.7%	-	-	-	-	-	-	-
	Breaches	6	4	10 to 15	0', 2', 4', 6' Elev.	SM- BBR-xxx- X			16.7%	16.7%	-	-	-	-	-	-	-
Total									10.7%	10.8%	14.1%	14.1%	14.7%	14.7%	14.1%	14.1%	-
MS/MSD EXTRA VOLUME - FREQUENCY (%)																	
Smelter Parcel	North Area, shallow	10	2	3	0, 2	SM- SPN-xxx- X			10.0%	10.0%	50.0%	50.0%	-	-	50.0%	50.0%	-
	North Area, deep	2	5	15 to 25	0, 5, 10, OW, N	SM- SPN-xxx- X			-	-	-	-	-	-	-	-	-
	Parking Area	4	2	3	0, 2	SM- SPP-xxx- X			-	-	-	-	-	-	-	-	-
	Smelter and SE Area	27	5	15 to 25	0, 5, 10, OW, N	SM- SPS-xxx- X			3.7%	3.7%	6.7%	6.7%	14.3%	14.3%	6.7%	6.7%	-
Waste Mgt Area	WMU	9	2	40 to 50	0, 5	SM- WMU-xxx- X			-	-	-	-	-	-	-	-	-
			3	40 to 50	30, 35, N	SM- WMU-xxx- X			-	-	-	-	-	-	-	-	-
	WDA	6	1	10 to 20	0	SM- WDA-xxx- X			-	16.7%	16.7%	16.7%	16.7%	16.7%	16.7%	16.7%	-
			1	10 to 20	5	SM- WDA-xxx- X			16.7%	16.7%	16.7%	16.7%	16.7%	16.7%	16.7%	16.7%	-
			1	10 to 20	N	SM- WDA-xxx- X			16.7%	16.7%	-	-	-	-	-	-	-
	North of WDA	4	2	3	0, 2	SM- WNO-xxx- X			-	-	-	-	-	-	-	-	-
	East Bank of OID	6	4	15 to 20	0, 5, 10, N	SM- ODE-xxx- X			-	-	-	-	-	-	-	-	-
NCL East	Land, > 8' contour	21	1	Surface	0	SM- NEL-xxx- X			4.8%	4.8%	-	-	-	-	-	-	-
	Land, < = 8' contour	40	2	3	0, 2	SM- NEL-xxx- X			2.5%	2.5%	-	-	-	-	-	-	-
	Land, > 8' contour	4	3	3	0, 0, 2	SM- NEL-xxx- X			25.0%	25.0%	-	-	-	-	-	-	-
NCL North	Background	6	1	Surface	0	SM- NNB-xxx- X			16.7%	16.7%	-	-	-	-	-	-	-
	Pond	2	1	Surface	0	SM- NNP-xxx- X			-	-	-	-	-	-	-	-	-
	Ditch north of WDA	4	1	Surface	0	SM- NND-xxx- X			-	-	-	-	-	-	-	-	-
	Land	4	3	3	0, 0, 2	SM- NNL-xxx- X			-	-	-	-	-	-	-	-	-
Hueneme	Parcel	4	3	3	0, 0, 2	SM- HUP-xxx- X			-	-	-	-	-	-	-	-	-
OID	Through Site	7	3	5	0, 2, 4	SM- OID-xxx- X			14.3%	14.3%	25.0%	25.0%	25.0%	25.0%	25.0%	25.0%	-
	North of Site	7	2	3	0,2	SM- OID-xxx- X			-	-	-	-	-	-	-	-	-
Lagoon	Lagoon, main area	10	3	5	0, 2, 4	SM- LGM-xxx- X			-	-	-	-	-	-	-	-	-
	Lagoon, fingers	12	2	3	0, 2	SM- LGF-xxx- X			8.3%	8.3%	16.7%	16.7%	16.7%	16.7%	16.7%	16.7%	-
Railroad	Loading dock	6	1	Surface	0	SM- RLD-xxx- X			-	-	-	-	-	-	-	-	-
McWane Blvd East	Road	4	2	3	0, 2	SM- MBR-xxx- X			-	-	-	-	-	-	-	-	-
	South of road	4	2	3	0, 2	SM- MBS-xxx- X			25.0%	25.0%	-	-	-	-	-	-	-
Wetland	Background	6	1	Surface	0	SM- WLB-xxx- X			16.7%	16.7%	-	-	-	-	-	-	-
	West Area	12	2	3	0, 2	SM- WLW-xxx- X			8.3%	8.3%	-	-	-	-	-	-	-
	East Area	8	2	3	0, 2	SM- WLE-xxx- X			-	-	-	-	-	-	-	-	-
	Ditch south of WMU	8	3	5	0, 2, 4	SM- DSA-xxx- X			12.5%	12.5%	-	-	-	-	-	-	-
	5' south of Ditch	8	2	3	0, 2	SM- DSB-xxx- X			-	-	-	-	-	-	-	-	-
	15' south of Ditch	8	2	3	0, 2	SM- DSC-xxx- X			-	-	-	-	-	-	-	-	-
Beach Dunes	Background	6	1	Surface	0	SM- BBG-xxx- X			16.7%	16.7%	-	-	-	-	-	-	-
	Breaches	6	4	10 to 15	0', 2', 4', 6' Elev.	SM- BBR-xxx- X			16.7%	16.7%	-	-	-	-	-	-	-
Total									5.3%	5.3%	8.2%	8.2%	10.3%	10.3%	8.2%	8.2%	-

TABLE 5-4
Request for Analysis, Soil Gas Matrix Samples
Halaco Site Remedial Investigation

Area	No. of Sample Loca-tions	No. of Sample Depths/ Location	Boring Depth (feet, bgs)	Sample Depths (feet, bgs)	Sample ID	Sample Depth (ft, bgs)	QC Sample	TO-15 VOCs	Ammonia	H2, CH4 CO, CO2, O2, Acetylene	H2S
							Lab	**R9**	TBD		
							Temperature	4 degrees C			
							Preservative	-	TBD	TBD	TBD
							Container	1-6L Summa	Sorbent Tube	1-6L Summa	1-1L Tedlar Bag
							Holding Time	30 day	TBD	TBD	TBD
WMU	2	3	10, 20, 35	5, 15, 30	SG- WSG-xxx- X		Frequency (%)	100	100	100	-
					WSG-001- A	5		X	X	X	
					` B	15	MS/MSD	X	X	X	
					" C	30	***	X	X	X	
					WSG-101- C	30	Duplicate	D	D	D	
					WSG-002- A	5		X	X	X	
					" B	15		X	X	X	
					" C	30		X	X	X	
Smelter Parcel	6	1	10	5	SG- SSG-xxx- X		Frequency (%)	100	100	100	100
					SSG-001- A	5	MS/MSD	X	X	X	X
					SSG-002- A	5	***	X	X	X	X
					SSG-102- A	5	Duplicate	D	D	D	D
					SSG-003- A	5		X	X	X	X
					SSG-004- A	5		X	X	X	X
					SSG-005- A	5		X	X	X	X
					SSG-006- A	5		X	X	X	X

Notes: (***) = Collect Duplicate sample.

PRIMARY SAMPLES - FREQUENCY (%)

WMU	2	3	10, 20, 35	5, 15, 30	SG- WSG-xxx- X			100	100	100	-
Smelter Parcel	6	1	10	5	SG- SSG-xxx- X			100	100	100	100

PRIMARY SAMPLES - QUANTITY

WMU	2	3	10, 20, 35	5, 15, 30	SG- WSG-xxx- X			6	6	6	-
Smelter Parcel	6	1	10	5	SG- SSG-xxx- X			6	6	6	6
Total								12	12	12	6

DUPLICATE SAMPLES - QUANTITY

WMU	2	3	10, 20, 35	5, 15, 30	SG- WSG-xxx- X			1	1	1	-
Smelter Parcel	6	1	10	5	SG- SSG-xxx- X			1	1	1	1
Total								2	2	2	1

MS/MSD EXTRA VOLUME - QUANTITY

WMU	2	3	10, 20, 35	5, 15, 30	SG- WSG-xxx- X			1	1	1	-
Smelter Parcel	6	1	10	5	SG- SSG-xxx- X			1	1	1	1
Total								2	2	2	1

DUPLICATE SAMPLES - FREQUENCY (%)

WMU	2	3	10, 20, 35	5, 15, 30	SG- WSG-xxx- X			17%	17%	17%	-
Smelter Parcel	6	1	10	5	SG- SSG-xxx- X			17%	17%	17%	17%
Total								17%	17%	17%	17%

MS/MSD EXTRA VOLUME - FREQUENCY (%)

WMU	2	3	10, 20, 35	5, 15, 30	SG- WSG-xxx- X			17%	17%	17%	-
Smelter Parcel	6	1	10	5	SG- SSG-xxx- X			17%	17%	17%	17%
Total								17%	17%	17%	17%

TABLE 5-5
Request for Analysis, Water Matrix Samples
Halaco Site Remedial Investigation

Event	Matrix	Area	No. of Sample Loca-tions	Well Depth (feet, bgs)	Sample ID	QC Sample	Radionuclides	TAL Metals - Total (unfiltered)	TAL Metals - Dissolved (field-filtered)	TCL VOCs	TCL SVOC	TPH-g	TPH-d	TDS, Hardness, Alkalinity (all forms), Anions (Cl, SO4, F, Br, I), NO3, NO2,	NH3, TKN	TOC	Field (EC, pH, T, Eh, DO, turbidity) *
						Lab	TBD	CLP				Region 9					Field
						Temperature	4 degrees C										-
						Preservative	TBD	HNO3 pH<2	HNO3 pH<2	HCL pH<2	-	HCL pH<2	-	-	H2SO4 pH<2	H2SO4 pH<2	-
						Container	TBD	1-0.5L Poly	1-0.5L Poly	3-40ml VOA	2-1L Amber Glass	3-40ml VOA	2-1L Amber Glass	1-1L Poly	1-0.5L Amber Glass	1-250ml Amber Glass	-
						Holding Time, Extraction	TBD	-	-	-	7 days	-	14 days	Variable (48 hr min for NO3)^^	-	-	-
						Holding Time, Analysis	TBD	6 mths^	6 mths^	14 days	40 days	14 days	40 days		28 days	28 days	-
1	Surface Water	OID	8	n/a	SW- OID-xxx-EventDate	Frequency (%)	100	100	100	-	-	-	-	100	100	25	100
					OID-001-mmyy	***	X	X	X					X	X		X
					OID-101-mmyy	Duplicate	D	D	D					D	D	D	D
					OID-002-mmyy	MS/MSD	X	X	X					X	X	X	X
					OID-003-mmyy		X	X	X					X	X		X
					OID-004-mmyy	***	X	X	X					X	X	X	X
					OID-104-mmyy	Duplicate	D	D	D					D	D		D
					OID-005-mmyy		X	X	X					X	X		X
					OID-006-mmyy		X	X	X					X	X	X	X
					OID-007-mmyy		X	X	X					X	X		X
					OID-008-mmyy		X	X	X					X	X	X	X
		Lagoon	2	n/a	SW- LAG-xxx-EventDate	Frequency (%)	100	100	100	-	-	-	-	100	100	50	100
					LAG-001-mmyy		X	X	X					X	X	X	X
					LAG-002-mmyy		X	X	X					X	X		X
		Ditch south of WMU	2	n/a	SW- WMU-xxx-EventDate	Frequency (%)	100	100	100	-	-	-	-	100	100	50	100
					WMU-001-mmyy		X	X	X					X	X	X	X
					WMU-002-mmyy		X	X	X					X	X		X
		NCL East	3	n/a	SW- NCE-xxx-EventDate	Frequency (%)	100	100	100	-	-	-	-	100	100	33	100
					NCE-001-mmyy		X	X	X					X	X		X
					NCE-002-mmyy		X	X	X					X	X	X	X
					NCE-003-mmyy		X	X	X					X	X		X
		Hueneme Drain	1	n/a	SW- HUD-xxx-EventDate	Frequency (%)	100	100	100	-	-	-	-	100	100	100	100
					HUD-001-mmyy		X	X	X					X	X	X	X
		J Street Drain	1	n/a	SW- *JSD-xxx-EventDate*	Frequency (%)	100	100	100	-	-	-	-	100	100	100	100
					JSD-001-mmyy		X	X	X					X	X	X	X
		Ocean surf line	2	n/a	SW- OCE-xxx-EventDate	Frequency (%)	100	100	100	-	-	-	-	100	100	-	100
					OCE-001-mmyy		X	X	X					X	X		X
					OCE-002-mmyy		X	X	X					X	X		X
	Ground-water	Existing wells	18	10 to 30	GW- Well_Name-EventDate	Frequency (%)	100	100	100	100	100	100	100	100	100	-	100
					MW-1R-mmyy		X	X	X	X	X	X	X	X	X		X
					MW-2RA-mmyy	MS/MSD	X	X	X	X	X	X	X	X	X		X
					MW-2RB-mmyy	***	X	X	X	X	X	X	X	X	X		X
					MW-999-mmyy	Duplicate	D	D	D	D	D	D	D	D	D		D
					MW-3RA-mmyy		X	X	X	X	X	X	X	X	X		X
					MW-3RB-mmyy		X	X	X	X	X	X	X	X	X		X
					MW-4RA-mmyy		X	X	X	X	X	X	X	X	X		X
					MW-4RB-mmyy		X	X	X	X	X	X	X	X	X		X
					MW-5-mmyy		X	X	X	X	X	X	X	X	X		X
					MW-6-mmyy		X	X	X	X	X	X	X	X	X		X
					MW-11-mmyy		X	X	X	X	X	X	X	X	X		X
					MW-12-mmyy	***	X	X	X	X	X	X	X	X	X		X
					MW-99-mmyy	Duplicate	D	D	D	D	D	D	D	D	D		D
					MW-13-mmyy		X	X	X	X	X	X	X	X	X		X
					MW-14-mmyy		X	X	X	X	X	X	X	X	X		X
					MW-15-mmyy		X	X	X	X	X	X	X	X	X		X
					MW-16-mmyy		X	X	X	X	X	X	X	X	X		X
					MW-17-mmyy		X	X	X	X	X	X	X	X	X		X
					MW-18-mmyy		X	X	X	X	X	X	X	X	X		X
					MW-19-mmyy		X	X	X	X	X	X	X	X	X		X
		New wells, shallow	8	20 to 25	GW- Well_Name-EventDate	Frequency (%)	100	100	100	100	100	100	100	100	100	-	100
					MW-20-mmyy	***	X	X	X	X	X	X	X	X	X		X
					MW-99-mmyy	Duplicate	D	D	D	D	D	D	D	D	D		D
					MW-21-mmyy	MS/MSD	X	X	X	X	X	X	X	X	X		X
					MW-22-mmyy		X	X	X	X	X	X	X	X	X		X
					MW-23-mmyy		X	X	X	X	X	X	X	X	X		X
					MW-24-mmyy		X	X	X	X	X	X	X	X	X		X
					MW-25-mmyy		X	X	X	X	X	X	X	X	X		X
					MW-26-mmyy		X	X	X	X	X	X	X	X	X		X
					MW-27-mmyy		X	X	X	X	X	X	X	X	X		X
		New wells, medium	4	50 to 100	GW- Well_Name-EventDate	Frequency (%)	100	100	100	100	100	100	100	100	100	-	100
					MW-2C-mmyy		X	X	X	X	X	X	X	X	X		X
					MW-3C-mmyy		X	X	X	X	X	X	X	X	X		X
					MW-6C-mmyy		X	X	X	X	X	X	X	X	X		X
					MW-19C-mmyy	***	X	X	X	X	X	X	X	X	X		X
					MW-999-mmyy	Duplicate	D	D	D	D	D	D	D	D	D		D
		New wells, deep	4	100 to 150	GW- Well_Name-EventDate	Frequency (%)	100	100	100	100	100	100	100	100	100	-	100
					MW-2D-mmyy		X	X	X	X	X	X	X	X	X		X
					MW-3D-mmyy		X	X	X	X	X	X	X	X	X		X
					MW-6D-mmyy		X	X	X	X	X	X	X	X	X		X
					MW-19D-mmyy		X	X	X	X	X	X	X	X	X		X
		New piezometers	4	10 to 30	GW- Well_Name-EventDate	Frequency (%)	-	-	-	-	-	-	-	-	-	-	100
					PZ-1A-mmyy												X
					PZ-1B-mmyy												X
					PZ-1C-mmyy												X
					PZ-2A-mmyy												X
					PZ-2B-mmyy												X
					PZ-2C-mmyy												X
					PZ-3A-mmyy												X
					PZ-3B-mmyy												X
					PZ-3C-mmyy												X
					PZ-4A-mmyy												X
					PZ-4B-mmyy												X
					PZ-4C-mmyy												X

TABLE 5-5
Request for Analysis, Water Matrix Samples
Halaco Site Remedial Investigation

Event	Matrix	Area	No. of Sample Loca-tions	Well Depth (feet, bgs)	Sample ID	QC Sample	Radionuclides	TAL Metals - Total (unfiltered)	TAL Metals - Dissolved (field-filtered)	TCL VOCs	TCL SVOC	TPH-g	TPH-d	TDS, Hardness, Alkalinity (all forms), Anions (Cl, SO4, F, Br, I), NO3, NO2,	NH3, TKN	TOC	Field (EC, pH, T, Eh, DO, turbidity) *
						Lab	TBD	CLP				Region 9					Field
						Temperature	4 degrees C										-
						Preservative	TBD	HNO3 pH<2	HNO3 pH<2	HCL pH<2	-	HCL pH<2	-	-	H2SO4 pH<2	H2SO4 pH<2	-
						Container	TBD	1-0.5L Poly	1-0.5L Poly	3-40ml VOA	2-1L Amber Glass	3-40ml VOA	2-1L Amber Glass	1-1L Poly	1-0.5L Amber Glass	1-250ml Amber Glass	-
						Holding Time, Extraction	TBD	-	-	-	7 days	-	14 days	Variable (48 hr min for NO3)^^	-	-	-
						Holding Time, Analysis	TBD	6 mths^	6 mths^	14 days	40 days	14 days	40 days		28 days	28 days	-
2	Surface Water	OID	8	n/a	SW- OID-xxx-EventDate	Frequency (%)	100	100	100	-	-	-	-	100	100	25	100
					OID-001-mmyy	***	X	X	X					X	X		X
					OID-101-mmyy	Duplicate	D	D	D					D	D	D	D
					OID-002-mmyy	MS/MSD	X	X	X					X	X	X	X
					OID-003-mmyy		X	X	X					X	X		X
					OID-004-mmyy	***	X	X	X					X	X	X	X
					OID-104-mmyy	Duplicate	D	D	D					D	D		D
					OID-005-mmyy		X	X	X					X	X		X
					OID-006-mmyy		X	X	X					X	X	X	X
					OID-007-mmyy		X	X	X					X	X		X
					OID-008-mmyy		X	X	X					X	X	X	X
		Lagoon	2	n/a	SW- LAG-xxx-EventDate	Frequency (%)	100	100	100	-	-	-	-	100	100	50	100
					LAG-001-mmyy		X	X	X					X	X	X	X
					LAG-002-mmyy		X	X	X					X	X		X
		Ditch south of WMU	2	n/a	SW- WMU-xxx-EventDate	Frequency (%)	100	100	100	-	-	-	-	100	100	50	100
					WMU-001-mmyy		X	X	X					X	X	X	X
					WMU-002-mmyy		X	X	X					X	X		X
		NCL East	3	n/a	SW- NCE-xxx-EventDate	Frequency (%)	100	100	100	-	-	-	-	100	100	33	100
					NCE-001-mmyy		X	X	X					X	X		X
					NCE-002-mmyy		X	X	X					X	X	X	X
					NCE-003-mmyy		X	X	X					X	X		X
		Hueneme Drain	1	n/a	SW- HUD-xxx-EventDate	Frequency (%)	100	100	100	-	-	-	-	100	100	100	100
					HUD-001-mmyy		X	X	X					X	X	X	X
		J Street Drain	1	n/a	SW- *JSD-xxx-EventDate*	Frequency (%)	100	100	100	-	-	-	-	100	100	100	100
					JSD-001-mmyy		X	X	X					X	X	X	X
		Ocean surf line	2	n/a	SW- OCE-xxx-EventDate	Frequency (%)	100	100	100	-	-	-	-	100	100	-	100
					OCE-001-mmyy		X	X	X					X	X		X
					OCE-002-mmyy		X	X	X					X	X		X
	Ground-water	Existing wells	18	10 to 30	GW- Well_Name-EventDate	Frequency (%)	100	100	100	-	-	-	-	100	100	-	100
					MW-1R-mmyy		X	X	X					X	X		X
					MW-2RA-mmyy	***	X	X	X					X	X		X
					MW-999-mmyy	Duplicate	D	D	D					D	D		D
					MW-2RB-mmyy	MS/MSD	X	X	X					X	X		X
					MW-3RA-mmyy		X	X	X					X	X		X
					MW-3RB-mmyy		X	X	X					X	X		X
					MW-4RA-mmyy		X	X	X					X	X		X
					MW-4RB-mmyy		X	X	X					X	X		X
					MW-5-mmyy		X	X	X					X	X		X
					MW-6-mmyy		X	X	X					X	X		X
					MW-11-mmyy		X	X	X					X	X		X
					MW-12-mmyy	***	X	X	X					X	X		X
					MW-99-mmyy	Duplicate	D	D	D					D	D		D
					MW-13-mmyy		X	X	X					X	X		X
					MW-14-mmyy		X	X	X					X	X		X
					MW-15-mmyy		X	X	X					X	X		X
					MW-16-mmyy		X	X	X					X	X		X
					MW-17-mmyy		X	X	X					X	X		X
					MW-18-mmyy		X	X	X					X	X		X
					MW-19-mmyy		X	X	X					X	X		X
		New wells, shallow	8	20 to 25	GW- Well_Name-EventDate	Frequency (%)	100	100	100	-	-	-	-	100	100	-	100
					MW-20-mmyy	***	X	X	X					X	X		X
					MW-99-mmyy	Duplicate	D	D	D					D	D		D
					MW-21-mmyy	MS/MSD	X	X	X					X	X		X
					MW-22-mmyy		X	X	X					X	X		X
					MW-23-mmyy		X	X	X					X	X		X
					MW-24-mmyy		X	X	X					X	X		X
					MW-25-mmyy		X	X	X					X	X		X
					MW-26-mmyy		X	X	X					X	X		X
					MW-27-mmyy		X	X	X					X	X		X
		New wells, medium	4	50 to 100	GW- Well_Name-EventDate	Frequency (%)	100	100	100	-	-	-	-	100	100	-	100
					MW-2C-mmyy		X	X	X					X	X		X
					MW-3C-mmyy		X	X	X					X	X		X
					MW-6C-mmyy		X	X	X					X	X		X
					MW-19C-mmyy	***	X	X	X					X	X		X
					MW-999-mmyy	Duplicate	D	D	D					D	D		D
		New wells, deep	4	100 to 150	GW- Well_Name-EventDate	Frequency (%)	100	100	100	-	-	-	-	100	100	-	100
					MW-2D-mmyy		X	X	X					X	X		X
					MW-3D-mmyy		X	X	X					X	X		X
					MW-6D-mmyy		X	X	X					X	X		X
					MW-19D-mmyy		X	X	X					X	X		X
		New piezometers	4	10 to 30	GW- Well_Name-EventDate	Frequency (%)	-	-	-	-	-	-	-	-	-	-	-
					PZ-1A-mmyy												
					PZ-1B-mmyy												
					PZ-1C-mmyy												
					PZ-2A-mmyy												
					PZ-2B-mmyy												
					PZ-2C-mmyy												
					PZ-3A-mmyy												
					PZ-3B-mmyy												
					PZ-3C-mmyy												
					PZ-4A-mmyy												
					PZ-4B-mmyy												
					PZ-4C-mmyy												

Notes: (*) QC samples not collected for field paramters.
(***) = Collect Duplicate sample.
(^) = Holding time for metals is 6 months, except for mercury which is 28 days.
(^^) = Holding times: NO3 and NO2 - 48 hours, TDS - 7 days, Alkalinity - 14 days, and Anions (Cl, SO4, F, Br, I) - 28 days

TABLE 5-5
Request for Analysis, Water Matrix Samples
Halaco Site Remedial Investigation

Event	Matrix	Area	No. of Sample Loca-tions	Well Depth (feet, bgs)	Sample ID	QC Sample	Radionuclides	TAL Metals - Total (unfiltered)	TAL Metals - Dissolved (field-filtered)	TCL VOCs	TCL SVOC	TPH-g	TPH-d	TDS, Hardness, Alkalinity (all forms), Anions (Cl, SO4, F, Br, I), NO3, NO2,	NH3, TKN	TOC	Field (EC, pH, T, Eh, DO, turbidity) *
						Lab	TBD	CLP				Region 9					Field
						Temperature	4 degrees C										-
						Preservative	TBD	HNO3 pH<2	HNO3 pH<2	HCL pH<2	-	HCL pH<2	-	-	H2SO4 pH<2	H2SO4 pH<2	-
						Container	TBD	1-0.5L Poly	1-0.5L Poly	3-40ml VOA	2-1L Amber Glass	3-40ml VOA	2-1L Amber Glass	1-1L Poly	1-0.5L Amber Glass	1-250ml Amber Glass	-
						Holding Time, Extraction	TBD	-	-	-	7 days	-	14 days	Variable (48 hr min for NO3)^^	-	-	-
						Holding Time, Analysis	TBD	6 mths^	6 mths^	14 days	40 days	14 days	40 days		28 days	28 days	-
PRIMARY SAMPLES - FREQUENCY (%)																	
1	Surface Water	OID	8	n/a	SW-	OID-xxx-EventDate	100	100	100	-	-	-	-	100	100	25	100
		Lagoon	2	n/a	SW-	LAG-xxx-EventDate	100	100	100	-	-	-	-	100	100	50	100
		Ditch south of WMU	2	n/a	SW-	WMU-xxx-EventDate	100	100	100	-	-	-	-	100	100	50	100
		NCL East	3	n/a	SW-	NCE-xxx-EventDate	100	100	100	-	-	-	-	100	100	33	100
		Hueneme Drain	1	n/a	SW-	HUD-xxx-EventDate	100	100	100	-	-	-	-	100	100	100	100
		J Street Drain	1	n/a	SW-	JSD-xxx-EventDate	100	100	100	-	-	-	-	100	100	100	100
		Ocean surf line	2	n/a	SW-	OCE-xxx-EventDate	100	100	100	-	-	-	-	100	100	-	100
	Ground-water	Existing wells	18	10 to 30	GW-	Well_Name-EventDate	100	100	100	100	100	100	100	100	100	-	100
		New wells, shallow	8	20 to 25	GW-	Well_Name-EventDate	100	100	100	100	100	100	100	100	100	-	100
		New wells, medium	4	50 to 100	GW-	Well_Name-EventDate	100	100	100	100	100	100	100	100	100	-	100
		New wells, deep	4	100 to 150	GW-	Well_Name-EventDate	100	100	100	100	100	100	100	100	100	-	100
		New piezometers	4	10 to 30	GW-	Well_Name-EventDate	-	-	-	-	-	-	-	-	-	-	100
2	Surface Water	OID	8	n/a	SW-	OID-xxx-EventDate	100	100	100	-	-	-	-	100	100	25	100
		Lagoon	2	n/a	SW-	LAG-xxx-EventDate	100	100	100	-	-	-	-	100	100	50	100
		Ditch south of WMU	2	n/a	SW-	WMU-xxx-EventDate	100	100	100	-	-	-	-	100	100	50	100
		NCL East	3	n/a	SW-	NCE-xxx-EventDate	100	100	100	-	-	-	-	100	100	33	100
		Hueneme Drain	1	n/a	SW-	HUD-xxx-EventDate	100	100	100	-	-	-	-	100	100	100	100
		J Street Drain	1	n/a	SW-	JSD-xxx-EventDate	100	100	100	-	-	-	-	100	100	100	100
		Ocean surf line	2	n/a	SW-	OCE-xxx-EventDate	100	100	100	-	-	-	-	100	100	-	100
	Ground-water	Existing wells	18	10 to 30	GW-	Well_Name-EventDate	100	100	100	-	-	-	-	100	100	-	100
		New wells, shallow	8	20 to 25	GW-	Well_Name-EventDate	100	100	100	-	-	-	-	100	100	-	100
		New wells, medium	4	50 to 100	GW-	Well_Name-EventDate	100	100	100	-	-	-	-	100	100	-	100
		New wells, deep	4	100 to 150	GW-	Well_Name-EventDate	100	100	100	-	-	-	-	100	100	-	100
		New piezometers	4	10 to 30	GW-	Well_Name-EventDate	-	-	-	-	-	-	-	-	-	-	-
PRIMARY SAMPLES - QUANTITY																	
1	Surface Water	OID	8	n/a	SW-	OID-xxx-EventDate	8	8	8	-	-	-	-	8	8	4	8
		Lagoon	2	n/a	SW-	LAG-xxx-EventDate	2	2	2	-	-	-	-	2	2	1	2
		Ditch south of WMU	2	n/a	SW-	WMU-xxx-EventDate	2	2	2	-	-	-	-	2	2	1	2
		NCL East	3	n/a	SW-	NCE-xxx-EventDate	3	3	3	-	-	-	-	3	3	1	3
		Hueneme Drain	1	n/a	SW-	HUD-xxx-EventDate	1	1	1	-	-	-	-	1	1	1	1
		J Street Drain	1	n/a	SW-	JSD-xxx-EventDate	1	1	1	-	-	-	-	1	1	1	1
		Ocean surf line	2	n/a	SW-	OCE-xxx-EventDate	2	2	2	-	-	-	-	2	2	-	2
	Ground-water	Existing wells	18	10 to 30	GW-	Well_Name-EventDate	18	18	18	18	18	18	18	18	18	-	18
		New wells, shallow	8	20 to 25	GW-	Well_Name-EventDate	8	8	8	8	8	8	8	8	8	-	8
		New wells, medium	4	50 to 100	GW-	Well_Name-EventDate	4	4	4	4	4	4	4	4	4	-	4
		New wells, deep	4	100 to 150	GW-	Well_Name-EventDate	4	4	4	4	4	4	4	4	4	-	4
		New piezometers	4	10 to 30	GW-	Well_Name-EventDate	-	-	-	-	-	-	-	-	-	-	12
2	Surface Water	OID	8	n/a	SW-	OID-xxx-EventDate	8	8	8	-	-	-	-	8	8	4	8
		Lagoon	2	n/a	SW-	LAG-xxx-EventDate	2	2	2	-	-	-	-	2	2	1	2
		Ditch south of WMU	2	n/a	SW-	WMU-xxx-EventDate	2	2	2	-	-	-	-	2	2	1	2
		NCL East	3	n/a	SW-	NCE-xxx-EventDate	3	3	3	-	-	-	-	3	3	1	3
		Hueneme Drain	1	n/a	SW-	HUD-xxx-EventDate	1	1	1	-	-	-	-	1	1	1	1
		J Street Drain	1	n/a	SW-	JSD-xxx-EventDate	1	1	1	-	-	-	-	1	1	1	1
		Ocean surf line	2	n/a	SW-	OCE-xxx-EventDate	2	2	2	-	-	-	-	2	2	-	2
	Ground-water	Existing wells	18	10 to 30	GW-	Well_Name-EventDate	18	18	18	-	-	-	-	18	18	-	18
		New wells, shallow	8	20 to 25	GW-	Well_Name-EventDate	8	8	8	-	-	-	-	8	8	-	8
		New wells, medium	4	50 to 100	GW-	Well_Name-EventDate	4	4	4	-	-	-	-	4	4	-	4
		New wells, deep	4	100 to 150	GW-	Well_Name-EventDate	4	4	4	-	-	-	-	4	4	-	4
		New piezometers	4	10 to 30	GW-	Well_Name-EventDate	-	-	-	-	-	-	-	-	-	-	-
Total							**106**	**106**	**106**	**34**	**34**	**34**	**34**	**106**	**106**	**18**	**118**
DUPLICATE SAMPLES - QUANTITY																	
1	Surface Water	OID	8	n/a	SW-	OID-xxx-EventDate	2	2	2	-	-	-	-	2	2	1	-
		Lagoon	2	n/a	SW-	LAG-xxx-EventDate	-	-	-	-	-	-	-	-	-	-	-
		Ditch south of WMU	2	n/a	SW-	WMU-xxx-EventDate	-	-	-	-	-	-	-	-	-	-	-
		NCL East	3	n/a	SW-	NCE-xxx-EventDate	-	-	-	-	-	-	-	-	-	-	-
		Hueneme Drain	1	n/a	SW-	HUD-xxx-EventDate	-	-	-	-	-	-	-	-	-	-	-
		J Street Drain	1	n/a	SW-	JSD-xxx-EventDate	-	-	-	-	-	-	-	-	-	-	-
		Ocean surf line	2	n/a	SW-	OCE-xxx-EventDate	-	-	-	-	-	-	-	-	-	-	-
	Ground-water	Existing wells	18	10 to 30	GW-	Well_Name-EventDate	2	2	2	2	2	2	2	2	2	-	-
		New wells, shallow	8	20 to 25	GW-	Well_Name-EventDate	1	1	1	1	1	1	1	1	1	-	-
		New wells, medium	4	50 to 100	GW-	Well_Name-EventDate	1	1	1	1	1	1	1	1	1	-	-
		New wells, deep	4	100 to 150	GW-	Well_Name-EventDate	-	-	-	-	-	-	-	-	-	-	-
		New piezometers	4	10 to 30	GW-	Well_Name-EventDate	-	-	-	-	-	-	-	-	-	-	-
2	Surface Water	OID	8	n/a	SW-	OID-xxx-EventDate	2	2	2	-	-	-	-	2	2	1	-
		Lagoon	2	n/a	SW-	LAG-xxx-EventDate	-	-	-	-	-	-	-	-	-	-	-
		Ditch south of WMU	2	n/a	SW-	WMU-xxx-EventDate	-	-	-	-	-	-	-	-	-	-	-
		NCL East	3	n/a	SW-	NCE-xxx-EventDate	-	-	-	-	-	-	-	-	-	-	-
		Hueneme Drain	1	n/a	SW-	HUD-xxx-EventDate	-	-	-	-	-	-	-	-	-	-	-
		J Street Drain	1	n/a	SW-	JSD-xxx-EventDate	-	-	-	-	-	-	-	-	-	-	-
		Ocean surf line	2	n/a	SW-	OCE-xxx-EventDate	-	-	-	-	-	-	-	-	-	-	-
	Ground-water	Existing wells	18	10 to 30	GW-	Well_Name-EventDate	2	2	2	-	-	-	-	2	2	-	-
		New wells, shallow	8	20 to 25	GW-	Well_Name-EventDate	1	1	1	-	-	-	-	1	1	-	-
		New wells, medium	4	50 to 100	GW-	Well_Name-EventDate	1	1	1	-	-	-	-	1	1	-	-
		New wells, deep	4	100 to 150	GW-	Well_Name-EventDate	-	-	-	-	-	-	-	-	-	-	-
		New piezometers	4	10 to 30	GW-	Well_Name-EventDate	-	-	-	-	-	-	-	-	-	-	-
Total							**12**	**12**	**12**	**4**	**4**	**4**	**4**	**12**	**12**	**2**	**-**

TABLE 5-5
Request for Analysis, Water Matrix Samples
Halaco Site Remedial Investigation

Event	Matrix	Area	No. of Sample Loca-tions	Well Depth (feet, bgs)	Sample ID	QC Sample	Radionuclides	TAL Metals - Total (unfiltered)	TAL Metals - Dissolved (field-filtered)	TCL VOCs	TCL SVOC	TPH-g	TPH-d	TDS, Hardness, Alkalinity (all forms), Anions (Cl, SO4, F, Br, I), NO3, NO2,	NH3, TKN	TOC	Field (EC, pH, T, Eh, DO, turbidity) *
						Lab	TBD	CLP				Region 9					Field
						Temperature	4 degrees C										-
						Preservative	TBD	HNO3 pH<2	HNO3 pH<2	HCL pH<2	-	HCL pH<2	-	-	H2SO4 pH<2	H2SO4 pH<2	-
						Container	TBD	1-0.5L Poly	1-0.5L Poly	3-40ml VOA	2-1L Amber Glass	3-40ml VOA	2-1L Amber Glass	1-1L Poly	1-0.5L Amber Glass	1-250ml Amber Glass	-
						Holding Time, Extraction	TBD	-	-	-	7 days	-	14 days	Variable (48 hr min for NO3)^^	-	-	-
						Holding Time, Analysis	TBD	6 mths^	6 mths^	14 days	40 days	14 days	40 days		28 days	28 days	-
MS/MSD EXTRA VOLUME - QUANTITY																	
1	Surface Water	OID	8	n/a	SW-	OID-xxx-EventDate	1	1	1	-	-	-	-	1	1	1	-
		Lagoon	2	n/a	SW-	LAG-xxx-EventDate	-	-	-	-	-	-	-	-	-	-	-
		Ditch south of WMU	2	n/a	SW-	WMU-xxx-EventDate	-	-	-	-	-	-	-	-	-	-	-
		NCL East	3	n/a	SW-	NCE-xxx-EventDate	-	-	-	-	-	-	-	-	-	-	-
		Hueneme Drain	1	n/a	SW-	HUD-xxx-EventDate	-	-	-	-	-	-	-	-	-	-	-
		J Street Drain	1	n/a	SW-	JSD-xxx-EventDate	-	-	-	-	-	-	-	-	-	-	-
		Ocean surf line	2	n/a	SW-	OCE-xxx-EventDate	-	-	-	-	-	-	-	-	-	-	-
	Ground-water	Existing wells	18	10 to 30	GW-	Well_Name-EventDate	1	1	1	1	1	1	1	1	1	-	-
		New wells, shallow	8	20 to 25	GW-	Well_Name-EventDate	1	1	1	1	1	1	1	1	1	-	-
		New wells, medium	4	50 to 100	GW-	Well_Name-EventDate	-	-	-	-	-	-	-	-	-	-	-
		New wells, deep	4	100 to 150	GW-	Well_Name-EventDate	-	-	-	-	-	-	-	-	-	-	-
		New piezometers	4	10 to 30	GW-	Well_Name-EventDate	-	-	-	-	-	-	-	-	-	-	-
2	Surface Water	OID	8	n/a	SW-	OID-xxx-EventDate	1	1	1	-	-	-	-	1	1	1	-
		Lagoon	2	n/a	SW-	LAG-xxx-EventDate	-	-	-	-	-	-	-	-	-	-	-
		Ditch south of WMU	2	n/a	SW-	WMU-xxx-EventDate	-	-	-	-	-	-	-	-	-	-	-
		NCL East	3	n/a	SW-	NCE-xxx-EventDate	-	-	-	-	-	-	-	-	-	-	-
		Hueneme Drain	1	n/a	SW-	HUD-xxx-EventDate	-	-	-	-	-	-	-	-	-	-	-
		J Street Drain	1	n/a	SW-	JSD-xxx-EventDate	-	-	-	-	-	-	-	-	-	-	-
		Ocean surf line	2	n/a	SW-	OCE-xxx-EventDate	-	-	-	-	-	-	-	-	-	-	-
	Ground-water	Existing wells	18	10 to 30	GW-	Well_Name-EventDate	1	1	1	-	-	-	-	1	1	-	-
		New wells, shallow	8	20 to 25	GW-	Well_Name-EventDate	1	1	1	-	-	-	-	1	1	-	-
		New wells, medium	4	50 to 100	GW-	Well_Name-EventDate	-	-	-	-	-	-	-	-	-	-	-
		New wells, deep	4	100 to 150	GW-	Well_Name-EventDate	-	-	-	-	-	-	-	-	-	-	-
		New piezometers	4	10 to 30	GW-	Well_Name-EventDate	-	-	-	-	-	-	-	-	-	-	-
Total							**6**	**6**	**6**	**2**	**2**	**2**	**2**	**6**	**6**	**2**	**-**
DUPLICATE SAMPLES - FREQUENCY (%)																	
1	Surface Water	OID	8	n/a	SW-	OID-xxx-EventDate	25%	25%	25%	-	-	-	-	25%	25%	25%	-
		Lagoon	2	n/a	SW-	LAG-xxx-EventDate	0%	0%	0%	-	-	-	-	0%	0%	0%	-
		Ditch south of WMU	2	n/a	SW-	WMU-xxx-EventDate	0%	0%	0%	-	-	-	-	0%	0%	0%	-
		NCL East	3	n/a	SW-	NCE-xxx-EventDate	0%	0%	0%	-	-	-	-	0%	0%	0%	-
		Hueneme Drain	1	n/a	SW-	HUD-xxx-EventDate	0%	0%	0%	-	-	-	-	0%	0%	0%	-
		J Street Drain	1	n/a	SW-	JSD-xxx-EventDate	0%	0%	0%	-	-	-	-	0%	0%	0%	-
		Ocean surf line	2	n/a	SW-	OCE-xxx-EventDate	0%	0%	0%	-	-	-	-	0%	0%	-	-
	Ground-water	Existing wells	18	10 to 30	GW-	Well_Name-EventDate	11%	11%	11%	11%	11%	11%	11%	11%	11%	-	-
		New wells, shallow	8	20 to 25	GW-	Well_Name-EventDate	13%	13%	13%	13%	13%	13%	13%	13%	13%	-	-
		New wells, medium	4	50 to 100	GW-	Well_Name-EventDate	25%	25%	25%	25%	25%	25%	25%	25%	25%	-	-
		New wells, deep	4	100 to 150	GW-	Well_Name-EventDate	0%	0%	0%	0%	0%	0%	0%	0%	0%	-	-
		New piezometers	4	10 to 30	GW-	Well_Name-EventDate	-	-	-	-	-	-	-	-	-	-	-
2	Surface Water	OID	8	n/a	SW-	OID-xxx-EventDate	25%	25%	25%	-	-	-	-	25%	25%	25%	-
		Lagoon	2	n/a	SW-	LAG-xxx-EventDate	0%	0%	0%	-	-	-	-	0%	0%	0%	-
		Ditch south of WMU	2	n/a	SW-	WMU-xxx-EventDate	0%	0%	0%	-	-	-	-	0%	0%	0%	-
		NCL East	3	n/a	SW-	NCE-xxx-EventDate	0%	0%	0%	-	-	-	-	0%	0%	0%	-
		Hueneme Drain	1	n/a	SW-	HUD-xxx-EventDate	0%	0%	0%	-	-	-	-	0%	0%	0%	-
		J Street Drain	1	n/a	SW-	JSD-xxx-EventDate	0%	0%	0%	-	-	-	-	0%	0%	0%	-
		Ocean surf line	2	n/a	SW-	OCE-xxx-EventDate	0%	0%	0%	-	-	-	-	0%	0%	-	-
	Ground-water	Existing wells	18	10 to 30	GW-	Well_Name-EventDate	11%	11%	11%	-	-	-	-	11%	11%	-	-
		New wells, shallow	8	20 to 25	GW-	Well_Name-EventDate	13%	13%	13%	-	-	-	-	13%	13%	-	-
		New wells, medium	4	50 to 100	GW-	Well_Name-EventDate	25%	25%	25%	-	-	-	-	25%	25%	-	-
		New wells, deep	4	100 to 150	GW-	Well_Name-EventDate	0%	0%	0%	-	-	-	-	0%	0%	-	-
		New piezometers	4	10 to 30	GW-	Well_Name-EventDate	-	-	-	-	-	-	-	-	-	-	-
Total							**11%**	**11%**	**11%**	**12%**	**12%**	**12%**	**12%**	**11%**	**11%**	**11%**	**-**
MS/MSD EXTRA VOLUME - FREQUENCY (%)																	
1	Surface Water	OID	8	n/a	SW-	OID-xxx-EventDate	13%	13%	13%	-	-	-	-	13%	13%	25%	-
		Lagoon	2	n/a	SW-	LAG-xxx-EventDate	0%	0%	0%	-	-	-	-	0%	0%	0%	-
		Ditch south of WMU	2	n/a	SW-	WMU-xxx-EventDate	0%	0%	0%	-	-	-	-	0%	0%	0%	-
		NCL East	3	n/a	SW-	NCE-xxx-EventDate	0%	0%	0%	-	-	-	-	0%	0%	0%	-
		Hueneme Drain	1	n/a	SW-	HUD-xxx-EventDate	0%	0%	0%	-	-	-	-	0%	0%	0%	-
		J Street Drain	1	n/a	SW-	JSD-xxx-EventDate	0%	0%	0%	-	-	-	-	0%	0%	0%	-
		Ocean surf line	2	n/a	SW-	OCE-xxx-EventDate	0%	0%	0%	-	-	-	-	0%	0%	-	-
	Ground-water	Existing wells	18	10 to 30	GW-	Well_Name-EventDate	6%	6%	6%	6%	6%	6%	6%	6%	6%	-	-
		New wells, shallow	8	20 to 25	GW-	Well_Name-EventDate	13%	13%	13%	13%	13%	13%	13%	13%	13%	-	-
		New wells, medium	4	50 to 100	GW-	Well_Name-EventDate	0%	0%	0%	0%	0%	0%	0%	0%	0%	-	-
		New wells, deep	4	100 to 150	GW-	Well_Name-EventDate	0%	0%	0%	0%	0%	0%	0%	0%	0%	-	-
		New piezometers	4	10 to 30	GW-	Well_Name-EventDate	-	-	-	-	-	-	-	-	-	-	-
2	Surface Water	OID	8	n/a	SW-	OID-xxx-EventDate	13%	13%	13%	-	-	-	-	13%	13%	25%	-
		Lagoon	2	n/a	SW-	LAG-xxx-EventDate	0%	0%	0%	-	-	-	-	0%	0%	0%	-
		Ditch south of WMU	2	n/a	SW-	WMU-xxx-EventDate	0%	0%	0%	-	-	-	-	0%	0%	0%	-
		NCL East	3	n/a	SW-	NCE-xxx-EventDate	0%	0%	0%	-	-	-	-	0%	0%	0%	-
		Hueneme Drain	1	n/a	SW-	HUD-xxx-EventDate	0%	0%	0%	-	-	-	-	0%	0%	0%	-
		J Street Drain	1	n/a	SW-	JSD-xxx-EventDate	0%	0%	0%	-	-	-	-	0%	0%	0%	-
		Ocean surf line	2	n/a	SW-	OCE-xxx-EventDate	0%	0%	0%	-	-	-	-	0%	0%	-	-
	Ground-water	Existing wells	18	10 to 30	GW-	Well_Name-EventDate	6%	6%	6%	-	-	-	-	6%	6%	-	-
		New wells, shallow	8	20 to 25	GW-	Well_Name-EventDate	13%	13%	13%	-	-	-	-	13%	13%	-	-
		New wells, medium	4	50 to 100	GW-	Well_Name-EventDate	0%	0%	0%	-	-	-	-	0%	0%	-	-
		New wells, deep	4	100 to 150	GW-	Well_Name-EventDate	0%	0%	0%	-	-	-	-	0%	0%	-	-
		New piezometers	4	10 to 30	GW-	Well_Name-EventDate	-	-	-	-	-	-	-	-	-	-	-
Total							**6%**	**6%**	**6%**	**6%**	**6%**	**6%**	**6%**	**6%**	**6%**	**11%**	**-**

TABLE 5-6
Request for Analysis, Air Matrix Samples
Halaco Site Remedial Investigation

Area	Subarea	No. of Sample Loca-tions	Sample Number and Frequncy	Sample ID	Sample Day	QC Sample	TAL Metals	Radionuclides
						Lab	TBD	TBD
						Temperature	4 degrees C	
						Container	Filter Media	Filter Media
						Holding Time	6 mths^	TBD
Upwind	West of Smelter Parcel	1	6 daily samples	AR- UPW-xxx-EventDate- X		Frequency (%)	100	100
				UPW-001-mmyy- A	Day 1		X	X
				" B	Day 2		X	X
				" C	Day 3		X	X
				" D	Day 4		X	X
				" E	Day 5		X	X
				" F	Day 6		X	X
Onsite	East edge of Smelter Parcel	1	6 daily samples	AR- SMP-xxx-EventDate- X		Frequency (%)	100	100
				SMP-001-mmyy- A	Day 1		X	X
				" B	Day 2		X	X
				" C	Day 3		X	X
				" D	Day 4		X	X
				" E	Day 5		X	X
				" F	Day 6		X	X
	East edge of WMU	1	6 daily samples	AR- WMU-xxx-EventDate- X		Frequency (%)	100	100
				WMU-001-mmyy- A	Day 1		X	X
				" B	Day 2	***	X	X
				WMU-101-mmyy- B	Day 2	Duplicate	D	D
				WMU-001-mmyy- C	Day 3		X	X
				" D	Day 4	***	X	X
				WMU-101-mmyy- D	Day 4	Duplicate	D	D
				WMU-001-mmyy- E	Day 5		X	X
				" F	Day 6	***	X	X
				WMU-101-mmyy F	Day 6	Duplicate	D	D
Downwind	NCL-E	1	6 daily samples	AR- NCE-xxx-EventDate- X		Frequency (%)	100	100
				NCE-001-mmyy- A	Day 1		X	X
				" B	Day 2		X	X
				" C	Day 3		X	X
				" D	Day 4		X	X
				" E	Day 5		X	X
				" F	Day 6		X	X
	NCL-N	1	6 daily samples	AR- NCN-xxx-EventDate- X		Frequency (%)	100	100
				NCN-001-mmyy- A	Day 1		X	X
				" B	Day 2		X	X
				" C	Day 3		X	X
				" D	Day 4		X	X
				" E	Day 5		X	X
				" F	Day 6		X	X

Notes: (***) = Collect Duplicate sample. (^) = Holding time for metals is 6 months, except for mercury which is 28 days.

PRIMARY SAMPLES - FREQUENCY (%)

Upwind	West of Smelter Parcel	1	6 daily samples	AR- UPW-xxx-EventDate- X			100	100
Onsite	East edge of Smelter Parcel	1	6 daily samples	AR- SMP-xxx-EventDate- X			100	100
	East edge of WMU	1	6 daily samples	AR- WMU-xxx-EventDate- X			100	100
Downwind	NCL-E	1	6 daily samples	AR- NCE-xxx-EventDate- X			100	100
	NCL-N	1	6 daily samples	AR- NCN-xxx-EventDate- X			100	100

PRIMARY SAMPLES - QUANTITY

Upwind	West of Smelter Parcel	1	6 daily samples	AR- UPW-xxx-EventDate- X			6	6
Onsite	East edge of Smelter Parcel	1	6 daily samples	AR- SMP-xxx-EventDate- X			6	6
	East edge of WMU	1	6 daily samples	AR- WMU-xxx-EventDate- X			6	6
Downwind	NCL-E	1	6 daily samples	AR- NCE-xxx-EventDate- X			6	6
	NCL-N	1	6 daily samples	AR- NCN-xxx-EventDate- X			6	6
Total							30	30

DUPLICATE SAMPLES - QUANTITY

Upwind	West of Smelter Parcel	1	6 daily samples	AR- UPW-xxx-EventDate- X			-	-
Onsite	East edge of Smelter Parcel	1	6 daily samples	AR- SMP-xxx-EventDate- X			-	-
	East edge of WMU	1	6 daily samples	AR- WMU-xxx-EventDate- X			3	3
Downwind	NCL-E	1	6 daily samples	AR- NCE-xxx-EventDate- X			-	-
	NCL-N	1	6 daily samples	AR- NCN-xxx-EventDate- X			-	-
Total							3	3

DUPLICATE SAMPLES - FREQUENCY (%)

Upwind	West of Smelter Parcel	1	6 daily samples	AR- UPW-xxx-EventDate- X			0%	0%
Onsite	East edge of Smelter Parcel	1	6 daily samples	AR- SMP-xxx-EventDate- X			0%	0%
	East edge of WMU	1	6 daily samples	AR- WMU-xxx-EventDate- X			50%	50%
Downwind	NCL-E	1	6 daily samples	AR- NCE-xxx-EventDate- X			0%	0%
	NCL-N	1	6 daily samples	AR- NCN-xxx-EventDate- X			0%	0%
Total							10%	10%

TABLE 5-7
Request for Analysis, Geotechnical Samples
Halaco Site Remedial Investigation

Area	Subarea	No. of Sample Loca-tions	No. of Sample Depths/ Location	Boring Depth (feet, bgs)	Sample Depths (feet, bgs)	Sample ID	Sample Depth (feet, bgs) *	Lab	Field	TBD			
									CPT (feet)	Grain Size, Atterberg Limits	Moisture, Density	Direct Shear	Modified Proctor
								Temp	n/a	4 degrees C			
								Container	none (insitu)	1-8oz Jar	1-6"x2" sleeve	1-6"x2" sleeve	1-5gal bucket
Smelter Parcel	Smelter Area, CPT, deep	1	Continuous	160	Continuous	SM- SCP-xxx- X	Quantity		160	-	-	-	-
						SCP-001- A	160		X				
	Smelter Area, CPT, shallow	1	Continuous	25	Continuous	SM- SCP-xxx- X	Quantity		25	-	-	-	-
						SCP-002- A	25		X				
	Smelter Area, geotechnical	2	3	25	5, 10, N	SM- SGT-xxx- X	Quantity		-	6	6	2	2
						SGT-001- A	5			X	X	X	
						" B	10			X	X		X***
						" C	N			X	X		
						SGT-002- A	5			X	X	X	
						" B	10			X	X		X***
						" C	N			X	X		
Waste Management Area	Top of WMU, CPT, shallow	2	Continuous	50	Continuous	SM- WCP-xxx- X	Quantity		100	-	-	-	-
						WCP-001- A	50		X				
						WCP-002- A	50		X				
	Edges of WMU, CPT, deep	2	Continuous	160	Continuous	SM- WCP-xxx- X	Quantity		320	-	-	-	-
						WCP-003- A	160		X				
						WCP-004- A	160		X				
	WMU, geotechnical	2	3	35	10, 20, 30	SM- WGT-xxx- X	Quantity		-	6	6	4	2
						WGT-001- A	10			X	X	X	
						" B	20			X	X		X***
						" C	30			X	X	X	
						WGT-002- A	10			X	X	X	
						" B	20			X	X		X***
						" C	30			X	X	X	
Lagoon	Lagoon, geotechnical	4	1	3	0	SM- LGT-xxx- X	Quantity		-	4	-	-	-
						LGT-001- A	1 - 2**			X			
						LGT-002- A	1 - 2**			X			
						LGT-003- A	1 - 2**			X			
						LGT-004- A	1 - 2**			X			

SUMMARY

Smelter Parcel	Smelter Area, CPT, deep	1	Continuous	160	Continuous	SM- SCP-xxx- X		160	-	-	-	-
	Smelter Area, CPT, shallow	1	Continuous	25	Continuous	SM- SCP-xxx- X		25	-	-	-	-
	Smelter Area, geotechnical	2	3	25	5, 10, N	SM- SGT-xxx- X		-	6	6	2	2
Waste Management Area	Top of WMU, CPT, shallow	2	Continuous	50	Continuous	SM- WCP-xxx- X		100	-	-	-	-
	Edges of WMU, CPT, deep	2	Continuous	160	Continuous	SM- WCP-xxx- X		320	-	-	-	-
	WMU, geotechnical	2	3	35	10, 20, 30	SM- WGT-xxx- X		-	6	6	4	2
Lagoon	Lagoon, geotechnical	4	1	3	0	SM- Q X		-	4	-	-	-
Total								605	16	12	6	4

Notes: N = Native

(*) Sample depths at top of sample interval. Sample intervals are 0.5' long.
(**) Sample interval is composite from 1 to 2'.
(***) Sample interval is composite from ground surface to depth indicated.

TABLE 5-8
Request for Analysis, Field Blanks
Halaco Site Remedial Investigation

Matrix	Area	No. of Samples	Sample ID	Radionuclides	TAL Metals	TCL VOCs	TCL SVOCs	TCL PCBs	WHO Dioxins	TPH-g	TPH-d	TDS, Hardness, Alkalinity (all forms), Anions (Cl, SO4, F, Br, I), NO3, NO2,	(1) Ammonia, (2) TKN for surface wataer and groundwater	TOC	VOCs
			Matrix	**Water**											**Air**
			Lab	**TBD**	**CLP**					**Region 9**					**CLP**
			Temperature	4 degrees C											
			Preservative	TBD	HNO3 pH<2	HCL pH<2	-	-	-	HCL pH<2	-	-	H2SO4 pH<2	H2SO4 pH<2	-
			Container	TBD	1-0.5L Poly	3-40ml VOA	2-1L Amber Glass	2-1L Amber Glass	2-1L Amber Glass	3-40ml VOA	2-1L Amber Glass	1-1L Poly	1-0.5L Amber Glass	1-250ml Amber Glass	1-6L Summa
			Holding Time, Extraction	TBD	-	-	7 days	7 days	14 days	-	14 days	Variable (48 hr min for NO3)^^	-	-	-
			Holding Time, Analysis	TBD	6 mths^	14 days	40 days	40 days	40 days	14 days	40 days		28 days	28 days	30 day
Solid Matrix	Equipment Blanks	20	SM- EB-xxx	20	20	4	4	-	4	4	4	-	4	2	-
			EB-001	X	X										
			EB-002	X	X										
			EB-003	X	X										
			EB-004	X	X										
			EB-005	X	X	X	X	X	X	X	X		X	X	
			EB-006	X	X										
			EB-007	X	X										
			EB-008	X	X										
			EB-009	X	X										
			EB-010	X	X	X	X	X	X	X	X		X		
			EB-011	X	X										
			EB-012	X	X										
			EB-013	X	X										
			EB-014	X	X										
			EB-015	X	X	X	X	X	X	X	X		X	X	
			EB-016	X	X										
			EB-017	X	X										
			EB-018	X	X										
			EB-019	X	X										
			EB-020	X	X	X	X	X	X	X	X		X		
	Trip Blanks	20	SM- TB-xxx	-	-	20	-	-	-	-	-	-	-	-	-
			TB-001			X									
			TB-002			X									
			TB-003			X									
			TB-004			X									
			TB-005			X									
			TB-006			X									
			TB-007			X									
			TB-008			X									
			TB-009			X									
			TB-010			X									
			TB-011			X									
			TB-012			X									
			TB-013			X									
			TB-014			X									
			TB-015			X									
			TB-016			X									
			TB-017			X									
			TB-018			X									
			TB-019			X									
			TB-020			X									
Soil Gas Matrix	Equipment Blanks	-	SG- EB-xxx	-	-	-	-	-	-	-	-	-	-	-	-
			None												
	Trip Blanks	6	SG- TB-xxx	-	-	-	-	-	-	-	-	-	-	-	6
			TB-001												X
			TB-002												X
			TB-003												X
			TB-004												X
			TB-005												X
			TB-006												X
Surface Water	Equipment Blanks	4	SW- EB-xxx	4	4	-	-	4	4	-	-	4	4	2	-
			EB-001	X	X							X	X		
			EB-002	X	X							X	X	X	
			EB-003	X	X							X	X		
			EB-004	X	X							X	X	X	
	Trip Blnaks	-	SW- TB-xxx	-	-	-	-	-	-	-	-	-	-	-	-
			None												
Ground-Water	Equipment Blanks	10	GW- EB-xxx	10	10	5	5	10	10	5	5	10	10	-	-
			EB-001	X	X	X	X			X	X	X	X		
			EB-002	X	X	X	X			X	X	X	X		
			EB-003	X	X	X	X			X	X	X	X		
			EB-004	X	X	X	X			X	X	X	X		
			EB-005	X	X	X	X			X	X	X	X		
			EB-006	X	X							X	X		
			EB-007	X	X							X	X		
			EB-008	X	X							X	X		
			EB-009	X	X							X	X		
			EB-010	X	X							X	X		
	Trip Blanks	5	GW- TB-xxx	-	-	5	-	-	-	-	-	-	-	-	-
			TB-001			X									
			TB-002			X									
			TB-003			X									
			TB-004			X									
			TB-005			X									

Notes: (^) = Holding time for metals is 6 months, except for mercury which is 28 days.
(^^) = Holding times: NO3 and NO2 - 48 hours, TDS - 7 days, Alkalinity - 14 days, and Anions (Cl, SO4, F, Br, I) - 28 days

SUMMARY

Solid	Equipment Blanks	20	SM- EB-xxx	20	20	4	4	-	4	4	4	-	4	2	-
	Trip Blanks	20	SM- TB-xxx	-	-	20	-	-	-	-	-	-	-	-	-
Soil Gas	Equipment Blanks	-	SG- EB-xxx	-	-	-	-	-	-	-	-	-	-	-	-
	Trip Blanks	6	SG- TB-xxx	-	-	-	-	-	-	-	-	-	-	-	6
Surface Water	Equipment Blanks	4	SW- EB-xxx	4	4	-	-	4	4	-	-	4	4	2	-
	Trip Blnaks	-	SW- TB-xxx	-	-	-	-	-	-	-	-	-	-	-	-
Ground-water	Equipment Blanks	10	GW- EB-xxx	10	10	5	5	10	10	5	5	10	10	-	-
	Trip Blanks	5	GW- TB-xxx	-	-	5	-	-	-	-	-	-	-	-	-
				34	**34**	**34**	**9**	**14**	**18**	**9**	**9**	**14**	**18**	**4**	**6**

SECTION 6

Field Methods and Procedures

This section provides the field methods and procedures for the work described in Sections 3, 4, and 5. The work is briefly described and then references are made to the specific tables, figures, and SOPs where the detailed information for the methods and procedures are provided. SOPs are provided in Appendix A.

6.1 Task-specific Methods and Procedures for Field Work

6.1.1 Task 1 – Sample Locating and Staking

Sample locations will be located and marked prior to field activities using a portable GPS device with horizontal sub-meter accuracy. Locations on dry land will be staked prior to sampling. Locations submerged with water will be determined at the time that samples are collected. Sample locations will be documented after field activities using GPS if they are moved after initially locating them with GPS prior to field activities.

The sample locating and staking will be performed in accordance with SOP 6-1 for dry land locations and SOP 6-2 for submerged sample locations.

GPS coordinates for sample locations are provided in Appendix B.

6.1.2 Task 2 – Subsurface Utility Clearance prior to Field Activities

Drilling and subsurface sampling locations with a potential for subsurface utilities or other obstructions (e.g., underground storage tanks [USTs]) will be cleared prior to drilling. Locations will be cleared using Underground Service Alert of Southern California (DigAlert, dial "811") and, as needed, surface geophysical methods. The geophysical methods will include a high sensitivity metal detector, magnetometer, and (GPR).

The subsurface utility clearance using GPR will be performed in accordance with SOP 6-3.

6.1.3 Task 3 – Visual Inspection for Presence of Process Slag Waste

A visual inspection of select surface and shallow subsurface areas will be performed to assess whether process slag waste is present. These areas will include the dirt road along McWane Blvd east of the OID, the wetland area south and west of the smelter area, and the wetland area south of the WMU. The visual observation will include a systematic slow walk in these areas. A shovel will be used to opportunistically remove near-surface soil and sand to visually inspect to a limited depth below ground surface. Discrete, obvious areas of process slag waste will not be excluded from samples, but will be included, if present at the sample location.

The visual inspections are described in Sections 4.1.8 and 4.1.9.

The transects to be walked for the visual inspections are shown in Figure A-10.

The visual inspections will be performed in accordance with SOP 6-4.

6.1.4 Task 4 – Solid Matrix Sampling

Surface and subsurface solid matrix (soil, sediment, and waste) samples will be collected for laboratory analyses and logged in the field. The samples will be collected using a combination of methods. On dry land, shallow samples will be collected using disposable scoops and deeper samples will be collected using either direct push (e.g., Geoprobe) or hollow stem auger (HSA) drilling methods. In areas submerged with water (OID, lagoon, NCL), samples will be collected using direct push methods deployed using a low-draft boat or barge.

The solid matrix samples are described in Section 4.1

The solid matrix sample locations are shown in Figures A-1 through and A-6.

The samples, containers, preservatives, and analyses are listed in Table 5-3.

The samples for chemical laboratory analysis will be collected in accordance with the following SOPs:

SOP 6-5 Direct-push Soil Sampling
SOP 6-6 Surface Soil/Hand-auger Soil and Sediment Sampling
SOP 6-7 Homogenization of Soil Samples
SOP 6-8 Vibracore Soil and Sediment Sampling

The samples for geotechnical analysis will be collected in accordance with SOP 6-9.

Soil, sediment, and waste obtained during sampling for chemical and geotechnical testing purposes will be logged in the field in accordance with SOP 6-10.

The samples will be numbered, labeled, packaged, shipped, and documented for laboratory analysis as described in Section 6.2.

General procedures for field equipment calibration and equipment decontamination are provided in Section 6.3.

Investigation-derived waste will be managed and disposed as described in Section 6.4.

6.1.5 Task 5 – Soil Gas Sampling

Soil gas samples will be collected for laboratory analyses. The samples will be collected from temporary soil gas probes.

The soil gas samples are described in Sections 4.1.1 and 4.1.2.

The soil gas sample locations are shown in Figures A-2 and A-3.

The samples, containers, preservatives, and analyses are listed in Table 5-4.

The soil gas probes will be installed in accordance with SOP 6-11 and the soil gas samples will be collected in accordance with SOP 6-12.

The samples will be numbered, labeled, packaged, shipped, and documented for laboratory analysis as described in Section 6.2.

General activities for field equipment calibration and equipment decontamination are provided in Section 6.3.

Investigation-derived waste will be managed and disposed as described in Section 6.4.

6.1.6 Task 6 – Cone Penetrometer Testing

In situ cone penetrometer testing (CPT) will be performed to shallow and deeper depths within the semiperched aquifer zone to evaluate subsurface lithology, physical properties, and general water quality. The CPT cones will be fitted with a standard cone to assess lithology (tip and sleeve resistance) and also an Electronic Conductivity/Hydraulic Profile Tool (EC/HPT) probe to assess general water quality anomalies and lithologic permeability with depth. In addition to evaluating geotechnical properties, the CPT results will be used to help plan and design the deeper groundwater monitoring wells to be installed within the semiperched aquifer zone (see next activity).

The cone penetrometer testing is described in Sections 4.1.1, 4.1.2, and 4.2.

The CPT locations are shown in Figures A-2, A-3, and A-8.

The CPT testing will be performed in accordance with SOP 6-13.

General activities for field equipment calibration and equipment decontamination are provided in Section 6.3.

Investigation-derived waste will be managed and disposed as described in Section 6.4.

6.1.7 Task 7 – Monitoring Well and Piezometer Installation and Surveying

Shallow water table groundwater monitoring wells and nested piezometers within the semiperched aquifer zone and deeper groundwater monitoring wells within the semiperched aquifer zone will be installed for groundwater sampling and water level measurements. Soil samples will be collected during drilling and logged in the field. New wells and piezometers will be surveyed by a Licensed Land Surveyor for horizontal coordinates and vertical elevations. Horizontal coordinates will be relative to North American Datum of 1983 (NAD 83) and vertical elevations will be relative to North American Vertical Datum of 1988 (NAVD 88).

The monitoring well and piezometer installation and surveying are described in Section 4.2.

The monitoring well and piezometer locations are shown in Figure A-8.

The monitoring wells will be installed in accordance with SOPs 6-14 and 6-15. The construction, elevations, and depths of the monitoring well casings and screens are summarized in Table 6-1.

The piezometers will be installed in accordance with SOP 6-16. The construction, elevations, and depths of the Oxnard Sewer Line (which is being evaluated by the piezometers) and the piezometers are summarized in Tables 6-2 and 6-3, respectively. The Oxnard Sewer Line and piezometers are schematically shown in Figure 6-1. The sewer line is constructed of 42 inch (3.5-foot) diameter high density polyethylene and is covered by approximately 15 to 20 feet of backfill.

Each of the piezometer nests will be installed approximately 10-feet south of the 3.5-foot diameter sewer line. The piezometer screens will be installed at the following depths, each in separate direct-push boreholes:

- The shallow "A" piezometer will be installed 5 to 10 feet above the top of the sewer line.
- The middle "B" piezometer will be installed at the mid-point of the sewer line.
- The deep "C" piezometer will be installed 5 to 10 feet below the sewer line.

General activities for field equipment calibration and equipment decontamination are provided in Section 6.3.

Investigation-derived waste will be managed and disposed as described in Section 6.4.

6.1.8 Task 8 – Groundwater Sampling

Two rounds of groundwater samples will be collected for laboratory analysis. Samples will be collected from existing groundwater monitoring wells and the new wells. Samples will be collected using minimal drawdown (low purge) methods with non-dedicated sampling pumps. Wells that do not yield sufficient water will be purged dry, allowed to recover, and then sampled. One round will be collected in the fall and one in the winter/spring. The first round will be collected during high water level conditions (beach berm is not breached) and second round will be collected during low water conditions (beach berm is breached).

The groundwater samples and analyses are described in Section 4.2

The groundwater sample locations are shown in Figure A-8.

The samples, containers, preservatives, and analyses are listed in Table 5-5.

The groundwater samples will be collected in accordance with SOP 6-17.

The samples will be numbered, labeled, packaged, shipped, and documented for laboratory analysis as described in Section 6.2.

General activities for field equipment calibration and equipment decontamination are provided in Section 6.3.

Investigation-derived waste will be managed and disposed as described in Section 6.4.

6.1.9 Task 9 – Surface Water Sampling

Two rounds of surface water samples will be collected for laboratory analysis. Samples will be collected using a scoop submerged beneath the water surface. One round will be collected in the fall and one in the winter/spring.

The timing during the day of collecting the surface water samples is as follows:

- The first round will be collected during non-breach conditions when the OID is at a high-water stage, and surface water slowly moves seaward through the lagoon and seeps through the berm toward the ocean. The timing of collecting the OID, lagoon, and J Street Drain samples relative to the daily tidal cycle is not important because the OID and lagoon levels are perched above the ocean level due to surface water backing up against the beach berm.
- The second round will be collected during breach conditions when ocean water cyclically moves inland with the rising tide and then drains to the ocean with the falling tide. The OID, lagoon, and J Street Drain samples will be collected at low tide so that the sampled water is not overly dominated by seawater which would be the case during high tide.
- The timing of collecting the NCL East and Hueneme Drain samples relative to the daily tidal cycle is not important because they are separated from the OID/lagoon/J Street Drain system. NCL East is separated from the OID/lagoon by a topographic divide at the east end of the ditch south of the WMU. Hueneme Drain is separated from the J Street Drain by a dam structure operated by Ventura County Watershed Protection District.

The surface water samples and analyses are described in Section 4.3.

The surface water sample locations are shown in Figure A-7.

The samples, containers, preservatives, and analyses are listed in Table 5-5.

The surface water samples will be collected in accordance with SOP 6-18.

The samples will be numbered, labeled, packaged, shipped, and documented for laboratory analysis as described in Section 6.2.

General activities for field equipment calibration and equipment decontamination are provided in Section 6.3.

Investigation-derived waste will be managed and disposed as described in Section 6.4.

6.1.10 Task 10 – Groundwater and Surface Water Level Measurement

Groundwater and surface water levels will be measured during each of the two sampling rounds to evaluate surface water and groundwater flow conditions. Surface water levels will be measured using three existing staff gauges already surveyed to NAVD 88. Groundwater levels will be measured from the existing wells already surveyed to NAVD 88 and the new wells and piezometers which will be surveyed to NAVD 88. The first round will be collected during non-breach conditions when the OID is at a high-water stage and the second round will be collected during breach conditions when ocean water cyclically moves inland with the rising tide and then drains to the ocean with the falling tide.

The water level measurement locations are described in Sections 4.2 and 4.3.

The water level measurement locations are shown in Figures A-7 and A-8.

The water level measurements will be collected in accordance with SOP 6-19.

General activities for field equipment calibration and equipment decontamination are provided in Section 6.3.

Investigation-derived waste will be managed and disposed as described in Section 6.4.

6.1.11 Task 11 – Air Sampling

One round of air samples will be collected for laboratory analysis. The samples will be collected from temporary air sampling stations. The samples will be collected during periods of high winds over the winter to determine whether windblown material is moving offsite. The round of air samples will consist of six daily samples collected for each temporary sampling station.

The air samples and analyses are described in Section 4.4

The air sample locations are shown in Figure A-9.

The samples, containers, preservatives, and analyses are listed in Table 6-6.

The air samples will be collected in accordance with SOP 6-20.

The samples will be numbered, labeled, packaged, shipped, and documented for laboratory analysis as described in Section 6.2.

General activities for field equipment calibration and equipment decontamination are provided in Section 6.3.

Investigation-derived waste will be managed and disposed as described in Section 6.4.

6.2 Sample Handling and Custody Methods and Procedures

6.2.1 Sample Containers and Preservatives

Samples for laboratory analysis will be placed in containers (with preservatives, if necessary) for laboratory analysis as detailed in the following tables:

- Table 5-3 Solid Matrix Samples
- Table 5-4 Soil Gas Matrix Samples
- Table 5-5 Water Matrix Samples (Surface Water and Groundwater)
- Table 5-6 Air Matrix Samples
- Table 5-7 Geotechnical Samples
- Table 5-8 Field Blanks

These tables include quality control (QC) samples, which will be collected for all samples for chemical and radiological analysis.

6.2.2 Quality Control Samples

Field QC samples include field duplicates, field blanks, and laboratory QC samples (for matrix spike and matrix spike duplicates [MS/MSDs]). QC samples will be collected immediately following collection of target samples, and using the same procedures as the

collection of the target sample. The QC samples will be collected or prepared to assist in determining data reliability.

QC samples will not be collected for geotechnical samples (Table 5-7).

Field Duplicates

The field duplicate is an independent sample collected as close as possible to the original sample from the same source and is used to document sampling precision. Field duplicates will be labeled and packaged in the same manner as other samples so that the laboratory cannot distinguish between samples and duplicates. Field duplicates will be collected by alternately filling sample and sample duplicate containers for chemical analysis. Each duplicate will be taken using the same sampling and preservation method as other samples. Field duplicates will be collected at a minimum frequency of one in every 10 samples. Tables 5-3 through 5-6 present the field duplicates expected to be collected during the scheduled sampling events.

Field Blanks

The field blanks are collected to verify that contamination is not introduced to samples during collection, handling, or shipping of the samples. Field blanks consist of equipment blanks, trip blanks, and temperature blanks

Equipment Blanks. If non-dedicated sampling equipment is used to collect samples, equipment blanks will be prepared by pouring blank water over or through decontaminated sampling equipment (equipment blanks). Commercially prepared HPLC water will be used for organic analyses and reagent-grade deionized water for inorganic analyses using the same preservation methods and packaging and sealing procedures used during collection of samples. Equipment blanks will be prepared and labeled in the same manner as the field samples and sent "blind" to the laboratory. If collected, equipment blanks will be collected at a frequency of once per day, after the last daily sample has been collected with non-dedicated equipment to represent potentially “worst case” conditions. Table 5-8 presents the equipment blank samples potentially to be collected during the scheduled sampling events.

Equipment blanks will not be prepared when dedicated or “certified, pre-cleaned” sampling equipment is used. Examples include disposable scoops for soil sampling.

Ambient field blanks will not be prepared by simply pouring water into a set of sample containers for analysis in the lab when equipment blanks are not needed or collected.

Trip Blanks. Trip blanks will be used to assess the potential introduction of contaminants from sample containers or during the transportation and storage procedures. A trip blank consists of a VOC sample vial filled in the laboratory with HPLC-grade water, transported to the sampling site, handled like an environmental sample, and returned to the laboratory for analysis. Trip blanks are not opened in the field, are prepared only when VOC samples are collected, and analyzed only for VOCs. Trip blanks will be shipped for each cooler containing samples for VOC analysis. Table 5-8 presents the trip blanks potentially to be collected during the scheduled sampling events.

Temperature Blanks. A temperature blank consists of a VOC sample vial filled in the field with de-ionized water, handled like an environmental sample, and returned to the

laboratory for analysis. The temperature blank provides a means of verifying that samples have been maintained at the proper temperature (4 °C) following collection and during transport to the laboratory. Temperature blanks will be included with each cooler shipment containing samples (regardless of targeted analysis) sent to the laboratory.

Laboratory QC Samples

Laboratory QC samples will be collected to perform MS and MSD analyses. An MS is an aliquot of a sample spiked with a known concentration of target analytes and provides a measure of the method accuracy. The MSD is a laboratory split sample of the MS, and is used to determine the precision of the method.

Three times the normal volume will be collected for laboratory QC samples (one volume for primary samples, one volume for MS samples, and one volume for MSD samples). MS/MSD laboratory QC samples will be labeled as such on sample bottles and paperwork. The MS/MSDs will be collected at the discretion of the field crew, at a frequency of one in every 20 collected samples or one per week, whichever is greater. Tales 5-3 through 5-5 presents the number of MS/MSDs expected to be collected during the scheduled sampling events.

MS/MSDs will not be collected for air matrix samples (Table 5-6).

6.2.3 Sample Naming Conventions

Samples for laboratory analysis will be named using the following convention for primary and QC samples. Samples for CLP analysis will also be given unique CLP-specific identification numbers to be provided by EPA shortly before sampling begins.

Solid Matrix and Soil Gas Samples

Solid matrix and soil gas samples will be identified as follows:

XX-YYY-ZZZ-D

Where:

XX = Sample Matrix Type (2 digits)

SM = Solid Matrix
SG = Soil Gas

YYY = Sample Area (3 digits)

Smelter Parcel Area

SPN = Smelter Parcel North Area
SPP = Smelter Parcel Parking Area
SPS = Smelter Parcel Smelter and Southeast Area
SCP = Smelter Cone Penetrometer Test
SGT = Smelter Geotechnical Sample

Waste Management Area

WMU = **W**aste Management Unit

WDA = Waste Disposal Area
WNO = Waste Disposal Area North
ODE = Oxnard Industrial Drain East Bank
WCP = Waste Disposal Area Cone Penetrometer Test
WGT = Waste Disposal Area Geotechnical Sample

Nature Conservancy Land Area

NEL = NCL East Land
NNB = NCL North Background
NNP = NCL North Pond
NND = NCL North Ditch
NNL = NCL North Land

Hueneme Parcel Area

HUN = Hueneme Parcel

OID and Lagoon Areas

OID = Oxnard Industrial Drain
LGM = Lagoon Main Area
LGF = Lagoon Finger Area
LGT = Lagoon Geotechnical Sample

Railroad Loading Dock Area

RLD = Railroad Loading Dock Area

McWane Boulevard East Area

MBR = McWane Boulevard Road
MBS= McWane Boulevard South of Road

Wetland Areas

WLB = Wetland Background Area
WLW = Wetland West Area
WLE = Wetland East Area
DSA = Ditch South "A" (in ditch)
DSB = Ditch South "B" (5 feet south of ditch)
DSC = Ditch South "C" (15 feet south of ditch)

Beach Dune Areas

BBG = Beach Background Area
BBR = Beach Breach Area

Soil Gas Areas

WSG = Waste Management Unit Soil Gas Sample
SSG = Smelter parcel Soil Gas Sample

ZZZ = Sample Location Number (3 digits)

001 through 099 = Primary Sample
101 through 199 = Duplicate Sample (corresponding to Primary Sample)

D = Sequential sample letter with depth.

A = Shallowest Sample
B = Next Deepest Sample
C = Next Deepest Sample

And so forth.

Surface Water and Air Samples

Surface water and air samples will be identified as follows:

XX-YYY-ZZZ-EventDate

Where:

XX = Sample Matrix Type (2 digits)

SW = Surface Water
AR = Air

YYY = Sample Area (3 digits)

Surface Water

OID = Oxnard Industrial Drain
LAG = Lagoon
WMU = Ditch south of WMU
NCE = NCL East
HUD = Hueneme Drain
JSD = J Street Drain
OCE = Ocean Surf Line

Air

UPW = Upwind of Smelter Parcel
SMP = East Edge of Smelter Parcel
WMU = East edge of WMU
NCE = NCL East
NCN = NCL North

ZZZ = Sample Location Number (3 digits)

001 through 099 = Primary Sample
101 through 199 = Duplicate Sample (corresponding to Primary Sample)

EventDate = MMYY (month and year, no hyphen, do not specify day of month)

Groundwater Samples

Groundwater samples will be identified as follows:

Well_Name-EventDate

Where:

Well_Name = Real Well Name for Primary Sample

Well_Name = Fictitious Well Name for Duplicate Sample

EventDate = MMYY (month and year, no hyphen, do not specify day of month)

Field Blank Samples

Field blank samples will be identified as follows:

XX-YY-ZZZ

Where:

XX = Primary Sample Matrix Type

SM = Solid Matrix
SG = Soil Gas
SW = Surface Water
GW = Groundwater

YY = Blank Type

EB = Equipment Blank
TB = Trip Blank

ZZZ = Sequential Blank Number

Temperature blanks will be simply identified as “Temperature Blank”.

6.2.4 Sample Handling and Custody Requirements (from QAPP)

A sample is physical evidence collected from a hazardous waste site, from the immediate environment, or from another source. Because of the potential evidentiary nature of samples, the possession of samples must be traceable from the time the samples are collected until they are introduced as evidence. In addition to field notebooks, there are a number of documents for tracking sample custody.

Field documents including sample custody seals, chain-of-custody (COC) records, and packing lists will be obtained from the Regional Sample Control Center (RSCC) in EPA's QAO. Chain-of-custody procedures will be used to maintain and document sample collection and possession. After sample packaging, the following one or more of the COC paperwork forms will be completed, as necessary, for the appropriate samples:

- Organic traffic report and chain of custody record
- Inorganic traffic report and chain-of-custody record

- EPA Region IX Chain-of-Custody Record
- Overnight shipping courier air bill

Copies of the above forms will be filled out and distributed per instructions for sample shipping and documentation in FSP LITE II electronic forms will also be used as applicable. If requested completed field quality assurance/quality control (QA/QC) summary forms will be sent to the RSCC at EPA's Region IX Quality Assurance Office at the conclusion of each sampling event.

Chain-of-Custody

Because samples collected during any investigation could be used as evidence, their possession must be traceable from the time the samples are collected until they are introduced as evidence in legal proceedings. Chain-of-custody procedures are followed to document sample possession.

Definition of Custody

A sample is under custody if one or more of the following criteria are met:

- It is in your possession
- It is in your view, after being in your possession
- It was in your possession and then you locked it up to prevent tampering
- It is in a designated secure area

Field Custody

In collecting samples for evidence, only enough to provide a good representation of the media being sampled will be collected. To the extent possible, the quantity and types of samples and sample locations are determined before the actual fieldwork. As few people as possible should handle samples.

The field sampler is personally responsible for the care and custody of the samples collected until they are transferred or dispatched properly.

The Project Manager determines whether proper custody procedures were followed during the field work, and decides if additional samples are required.

Transfer of Custody and Shipment

Samples are accompanied by a COC record. When transferring samples, the individuals relinquishing and receiving sign, date, and note the time on the record. This record documents custody transfer from the sampler, often through another person, to the analyst at the laboratory.

Samples are packaged properly for shipment and dispatched to the appropriate laboratory for analysis, with a separate COC record accompanying each shipping container (one for each field laboratory, and one for samples driven to the laboratory). Shipping containers will be sealed with custody seals for shipment to the laboratory. Courier names, and other pertinent information, are entered in the "Received by" section of the COC record.

Whenever samples are split with a facility owner or agency, it is noted in the remarks section of the COC record. The note indicates with whom the samples are being split, and is signed by both the sampler and recipient. If the split is refused, this will be noted and

signed by both parties. If a representative is unavailable or refuses to sign, this is noted in the remarks section of the COC record. When appropriate, as in the case where the representative is unavailable, the COC record should contain a statement that the samples were delivered to the designated location at the designated time.

All shipments are accompanied by the COC record identifying its contents. The original record and yellow copy accompanies the shipment to the laboratory, and the pink copy is sent to be retained by the SM.

If sent by mail, the package is registered with return requested. If sent by common carrier, a bill of lading is used. Freight bills, postal service receipts, and bills of lading are retained as part of the permanent documentation.

Laboratory Custody Procedures

A designated sample custodian accepts custody of the shipped samples, and verifies that the packing list sample numbers match those on the COC records. Pertinent information as to shipment, pickup, and courier is entered in the "Remarks" section. The custodian then enters the sample numbers into a bound notebook, which is arranged by project code and station number.

The laboratory custodian uses the sample identification number or assigns a unique laboratory number to each sample, and is responsible for seeing that all samples are transferred to the proper analyst or stored in the appropriate secure area.

The custodian distributes samples to the appropriate analysts. Laboratory personnel are responsible for the care and custody of samples from the time they are received, until the sample is exhausted or returned to the custodian. The data from sample analyses are recorded on the laboratory report form.

When sample analyses and necessary QA checks have been completed in the laboratory, the unused portion of the sample will be disposed of properly. All identifying stickers, data sheets, and laboratory records are retained as part of the documentation. Sample containers and remaining samples are disposed of in compliance with all federal, state, and local regulatory requirements.

Custody Seals

When samples are shipped to the laboratory, they must be placed in containers sealed with custody seals. One or more custody seals must be placed on each side of the shipping container (cooler).

Field Notebooks

Typical field information to be entered in the field notebook is included in SOP 6-21. In addition to COC records, a bound field notebook must be maintained by each sampling team leader to provide a daily record of significant events, observations, and measurements during field investigations. All entries should be signed and dated. It should be kept as a permanent record.

These notebooks are intended to provide sufficient data and observations to enable participants to reconstruct events that occurred during the project, and to refresh the

memory of the field personnel if called upon to give testimony during legal proceedings. In a legal proceeding, notes, if referred to, are subject to cross-examination and are admissible as evidence.

Corrections to Documentation

All original data recorded in field notebooks, sample identification tags, COC records, and receipts-for-sample forms will be written with waterproof ink, unless prohibited by weather conditions. None of these accountable serialized documents are to be destroyed or thrown away, even if they are illegible or contain inaccuracies that require a replacement document.

If an error is made on an accountable document assigned to one team, the team leader may make corrections simply by drawing a single line through the error and entering the correct information. The erroneous information should not be obliterated. Any subsequent error discovered on an accountable document should be corrected by the person who made the entry. All subsequent corrections must be initialed and dated.

6.2.5 Sample Management Procedures and Documentation

Field Notes and Logbooks

Field notes for site sampling activities may consist of logbooks, pre-printed field data sheets, chain-of-custody forms, and photographs.

Sampling activities will be recorded in a bound field notebook (SOP 6-21). These notebooks are intended to provide sufficient data and observations to enable participants to reconstruct events that occurred during the project, and to refresh the memory of the field personnel if called upon to give testimony during legal proceedings. In a legal proceeding, notes, if referred to, are subject to cross-examination and are admissible as evidence. Entries must be dated, legible, written in permanent ink, and contain accurate and inclusive documentation of project activities. Language should be objective and factual. Legible corrections, which will be single lines through the error, signed and dated by the person making the correction. The field notebook must be maintained by each sampling team leader to provide a daily record of significant events, observations, and measurements during field investigations. Entries should be signed and dated. It should be kept as a permanent record.

The information to be recorded on field data sheets will include the following:

- Sample location and date
- Names of all field team members
- Weather conditions
- Field measurement/equipment calibration standard
- Time of sample collection
- QC samples collected
- Number of containers collected, preservatives used, and analyses to be performed
- Laboratory the sample will be shipped to
- Comments or exceptions to the FSP/QAPP
- Reference to any photographs taken

Photographs

For each photograph taken, the following information will be written in the logbook or recorded in a separate field photography log:

- Time, date, location, and weather conditions
- Description of the subject photographed
- Name of person taking the photograph

Digital camera use and documentation are included in SOP 6-22.

Sample Labeling

Each sample container will be labeled with a sample identification number, date of collection, time of collection, case number if required, type of analysis, and preservatives. Sample identification numbers and locations (including blanks and duplicates) will be recorded in the field notebook and field datasheet.

Sample Chain-of-Custody Forms and Custody Seals

When samples are shipped to the laboratory, they must be placed in containers sealed with custody seals. One or more custody seals must be placed on each side of the shipping container (cooler). Chain-of-custody forms will be filled out or generated using Forms II Lite for the collected samples as applicable.

Chain-of-custody procedures will be followed as described below to accomplish this task:

- The chain-of-custody documentation will be completed using the information included on each sample label including a sample identification number which will correspond to the well number, the date and time the sample was collected, case number, the initials of the sampler, identification of any preservatives used, the samplers affiliation, and the analysis requested.

- Additional information included on the chain-of-custody will include the contact address, phone number, and fax number of the sampler and/or consultant project manager along with any special instructions or warnings for the laboratory.

- Each chain-of-custody form will be signed by the sampler and again be signed by the laboratory official once the samples have been delivered. Courier names and other pertinent information are entered in the “Received by” section of the COC record.

- The chain-of-custody will be included with each sample it documents until such time the samples have been delivered to the laboratory. The original COC accompanies the shipment to the laboratory. One copy of the COC will be retained in the project file and another copy along with the archived database will be sent to EPA.

If sent by mail, the package is registered with return requested. If sent by common carrier, a bill of lading is used. Freight bill, postal service receipts, and bills of lading are retained as part of the permanent documentation.

Sample Packaging and Shipping

Sample Containers

1. Cover glass sample bottles with bubble wrap.
2. Place sample containers for each sample in the cooler.

Preparing the Sample Cooler

1. Remove all previous labels used on cooler.
2. Seal all drain plugs (outside and inside).
3. Place a cushioning layer at bottom of cooler.
4. Double bag all ice in plastic bags and seal.

Packing Samples in Coolers

1. Place chain-of-custody form in ziplock bag.
2. Place samples in upright position in cooler.
3. Fill void space between samples with cushioning material and/or ice.
4. Place ice on top of water samples and between samples.

Closing of Cooler

1. Tape cooler lid with strapping tape, encircling cooler several times.
2. Place chain-of-custody seals on two sides of lid (suggest seal in front and side).
3. Place “This Side Up” arrows on sides of cooler.

Place the coolers or box containing samples upright on a flat, stable surface to avoid tipping and/or sliding during transport. Keep out of the sun entirely. Transport to the laboratory (or an overnight courier for shipment to the appropriate laboratory) immediately upon completion of sample collection. Intermediate stops should be avoided, with the exception of emergencies only, in which case the situation should be noted in the field notebooks. If the samples are shipped via overnight courier, notify the laboratory that the samples are being shipped.

Sample Shipping and Documentation (U.S. EPA Region IX Instructions)

As appropriate, samples will be shipped and documented using the U.S. EPA Region IX instructions for sample shipping and documentation (Appendix C).

6.3 General Methods and Procedures for Field Work

6.3.1 Field Equipment Calibration

Field equipment will be calibrated in accordance with procedures and schedules outlined in the particular instrument's operations and maintenance manual. General calibration requirements are provided below. Calibration procedures for typical field instruments to be used are provided in SOP 6-23.

Calibrated equipment will be uniquely identified by using either the manufacturer's serial number or other means. A label with the identification number and the date when the next calibration is due will be physically attached to the equipment. If this is not possible, records traceable to the equipment will be readily available for reference. In addition, the results of calibrations and records of repairs will be recorded in a logbook.

Scheduled periodic calibration of testing equipment does not relieve field personnel of the responsibility of employing properly functioning equipment. If an individual suspects an equipment malfunction, the device must be removed from service, tagged so that it is not inadvertently used, and the appropriate personnel notified so that a recalibration can be performed, or a substitute piece of equipment can be obtained.

Equipment that fails calibration or becomes inoperable during use will be removed from service and either segregated to prevent inadvertent use, or tagged to indicate it is out of calibration. Such equipment will be repaired and satisfactorily recalibrated. Equipment that cannot be repaired will be replaced.

Results of activities performed using equipment that has failed recalibration will be evaluated. If the activity results are adversely affected, the results of the evaluation will be documented and the task manager and QA/QC reviewer will be notified.

6.3.2 Equipment Decontamination

Equipment will be decontaminated as described in SOP 6-24.

6.4 Investigation-Derived Waste Management and Disposal

Investigated-derived waste (IDW) will be managed and disposed according to an IDW Management Plan to be submitted under separate cover.

SECTION 7

Health and Safety Plan

The health and safety plan will be submitted under separate cover.

SECTION 8

References

AMEC. 2006. *Final Report, Ormond Beach Wetland Restoration Site-Wide Soil/Surface Water Investigation*. Prepared by AMEC Earth & Environmental, Inc. for Aspen Environmental Group, November.

Amwest. 2000. *Gas Generation and Water Evaporation from the Settling Pond, Halaco Engineering Site*. Prepared by Amwest Environmental Engineering. April 26.

California Department of Health Services. 1979. *Hazardous Waste Surveillance and Enforcement Report regarding Inspection of On-site Disposal Operation of Possible Hazardous Waste*. CA Department of Health Services. November 4.

California Department of Health Services. 1980. *Investigation of Onsite Disposal of Hazardous Waste*. December 4.

CA DFG. 1980. *Letter from Robert G. Kaneen ,CA Dept. of Fish and Game, to South Coast Regional Coastal Commission, Attention Carl C. Hetrick, regarding Halaco Engineering Co., Oxnard.* March 25.

CH2M HILL. 2009. *Comparison of Metals Concentrations for Solid Matrix Samples Analyzed by Field XRF and Fixed Laboratory Methods for the 2006 Integrated Assessment, Halaco Site.* Prepared for EPA by CH2M HILL, January.

CH2M HILL. 2008a. *Preliminary Evaluation of the Sources, Nature, Extent, and Movement of Contamination in Surface Water and Groundwater, Halaco Site.* Prepared for EPA by CH2M HILL, December.

CH2M HILL. 2008b. Screening-Level Ecological and Human Health Risk Assessment, Halaco Site. Prepared for EPA by CH2M HILL, December.

California Department of Toxic Substances Control. 2000. *Statement of Facts in the Investigation of Halaco Engineering Co*. November 13.

Engineering-Science. 1965. *Letter from Joseph Feeney, Engineering-Science, Inc., to Hugh Clark Jr., Director of Public Works, City of Oxnard.* December 2.

Gable. 2007. Response to EPA information request by David Gable, dated October 1.

Haack. 2007. Response to EPA information request by Clarence Haack, dated October 1.

Halaco. 1966-1995. *Inventories of materials,* prepared by Halaco August 31, 1966, February 29, 1968, August 31, 1968, August 31, 1969, December 31, 1995.

Halaco. 1993. *Letter from David Gable, Halaco Inc., to Brad Windsor, City of Oxnard Fire Department, regarding ammonia emissions*. April 5.

Halaco. 2003. *Letter from John Haack of Halaco Engineering to City of Oxnard Wastewater Division*. June 26.

Halaco. 2004. *Halaco Engineering Quarterly Sampling Report, for July, August, September, 2004*, submitted to Jon Bishop of the CA Regional Water Quality Control Board. October 29.

Halaco. 2004. *July 2004 Progress Report CDO #R4-2002-0064*, submitted by Halaco Inc. to Jon Bishop of the CA Regional Water Quality Control Board. July 29.

JMM. 1980. *Engineering Report, Analysis of Solid Waste Generated by Halaco Engineering Company, Oxnard, California*, James M. Montgomery Consulting Engineers. December (date uncertain).

Lockheed. 1982. *Photographic Analysis of a Waste Disposal Site, Ventura CA*, Prepared by Lockheed Engineering and Management Services Company for Environmental Monitoring Systems Laboratory, Office of Research and Development. U.S. Environmental Protection Agency, Las Vegas Nevada. May.

Lockheed. 1991. *Aerial Photographic Analysis of the Halaco Engineering Facility, Oxnard, California.* Prepared by Lockheed Engineering and Sciences Company for Environmental Monitoring Systems Laboratory, Office of Research and Development. U. S. Environmental Protection Agency, Las Vegas Nevada. February.

Oxnard. 1965. *Letter from Hugh Clark Jr., Public Works Director, City of Oxnard, to Halaco Company.* December 9.

Oxnard. 1970. *Letter from Robert D. Thorson, Public Works Director, City of Oxnard, to Halaco Engineering Company.* December 1.

Padre. 2003. *Report of Findings, Supplemental Characterization/Waste Sampling of*

Waste Management Unit, Halaco Engineering Co Facility. Padre Associates. February.

Padre. 2002. *Report of Findings, Characterization/Waste Sampling of Waste Management Unit, Halaco Engineering Co Facility. Padre Associates.* November.

PWA. 2007. *Ormond Beach Wetland Restoration Feasibility Plan: Hydrologic and Geomorphic Conditions Report.* Philip Williams & Associates. September 26.

RWQCB. 1970. Resolution No. 70-63 – Waste Discharge Requirements for Halaco Engineering Company. Regional Water Quality Control Board, Los Angeles Region.

RWQCB. 1998. *Results of August 14, 1998 Environmental Sampling at Halaco*. CA Regional Water Quality Control Board. November 23.

RWQCB. 2002. Cease and Desist Order No. R4-2002-0064 for Halaco Engineering Company. Regional Water Quality Control Board, Los Angeles Region, March 7.

Team 9. 2008. *Summary Report, Halaco Metal Recyclers.* Prepared for EPA by "Team 9," May 16.

U.S. Environmental Protection Agency, NEIC. 1981. *Investigation of Halaco Engineering Company, Oxnard, California,* EPA-330/2-81-007. EPA National Enforcement Investigations Center. June.

U.S. Environmental Protection Agency. 2005. *Draft Exposure and Human Health Reassessment of 2,3,7,8-Tetrachlorodibenzo-*p*-Dioxin (TCDD) and Related Compounds,* EPA, March. Available online at:

http://cfpub.epa.gov/ncea/cfm/part1and2.cfm?ActType=default (see Vol 2, Chapter 7, Section 7.2.1).

U.S. Environmental Protection Agency. 1988. *Guidance for Conducting Remedial Investigations and Feasibility Studies under CERCLA* (Interim Final). OSWER Directive 9355.3.01. October.

U.S. Environmental Protection Agency. 2002. Guidance for Comparing Background and Chemical Concentrations in Soil for CERCLA Sites. Office of Solid Waste and Emergency Response. EPA 540-R-01-003

U.S. Environmental Protection Agency – Region 9. 2009. Plan for Additional Sampling and Analysis Activities, Halaco Superfund Site Remedial Investigation, Oxnard, California. Jointly prepared by EPA and CH2M HILL. February 6.

URS. 2004. *Technical Work Plan, Wet Weather Sampling at Surface Water Impoundment.* Prepared for Halaco Engineering Company. May.

VCAPCD. 1987. *Inspection Report - Halaco Engineering Co.* Ventura County Air Pollution Control District (APCD). January 8.

Weston. 2007. *Integrated Assessment, Halaco Engineering Company, Oxnard, California, Ventura County.* Prepared by Weston Solutions, Inc. for the United States Environmental Protection Agency, Region 9. January. Available online at: www.epa.gov/region9/halaco.

WRA. 2007. *Final Biological Assessment, Ormond Beach, Oxnard, Ventura County, California.* Prepared by WRA Environmental Consultants for Aspen Environmental Group. July.

Tables

TABLE 4-1
Summary of Planned RI Samples
Halaco Site Remedial Investigation

Matrix	Area	Subarea	Sample ID	No. of Sample Events	No. of Sample Loca-tions	No. of Sample or Well Depths/ Location	Boring or Well Depth (feet, bgs)	Sample Depths (feet, bgs)	Frequency of Analysis (%)														Number of Samples													
									Chemical										Geotechnical			Chemical											Geotechnical		
									Metals (**)	Radionuclides	VOCs	SVOC, TPH	PCBs and Dioxins	Ammonia	General Chem. and Tracers	Field (EC, pH, T, Eh, DO, turbidity)	H2, CH4 CO, CO2, O2, Acetylene	H2S	TOC and pH	CPT (feet)	Grain Size, Atterberg Limits	Moisture, Density, Modified Proctor, Direct Shear	Metals	Radionuclides	VOCs	SVOC, TPH	PCBs and Dioxins	Ammonia	General Chem. and Tracers	Field (EC, pH, T, Eh, DO, turbidity)	H2, CH4 CO, CO2, O2, Acetylene	H2S	TOC and pH	CPT (feet)	Grain Size, Atterberg Limits	Moisture, Density, Modified Proctor, Direct Shear (***)
Solid Matrix (SM)	Smelter Parcel	North Area, shallow samples	SM-SPN-xxx-depth	1	10	2	3	0, 2	100	100	25	25	-	-	-	-	-	-	-	-	-	-	20	20	5	5	-	-	-	-	-	-	-	-	-	-
		North Area, deeper samples	SM-SPN-xxx-depth	1	2	5	15 to 25	0, 5, 10, OW, N	100	100	25	25	-	-	-	-	-	-	-	-	-	-	10	10	3	3	-	-	-	-	-	-	-	-	-	-
		Parking Area	SM-SPP-xxx-depth	1	4	2	3	0, 2	100	100	50	50	-	-	-	-	-	-	-	-	-	-	8	8	4	4	-	-	-	-	-	-	-	-	-	-
		Smelter and Southeast Area	SM-SPS-xxx-depth	1	27	5	15 to 25	0, 5, 10, OW, N	100	100	50	50	25	-	-	-	-	-	-	-	-	-	135	135	68	68	34	-	-	-	-	-	-	-	-	-
		Smelter Area, CPT, shallow	SM-SCP-xxx-depth	1	1	Continuous	25	Continuous	-	-	-	-	-	-	-	-	-	-	-	100	-	-	-	-	-	-	-	-	-	-	-	-	-	25	-	-
		Smelter Area, CPT, deep	SM-SCP-xxx-depth	1	1	Continuous	160	Continuous	-	-	-	-	-	-	-	-	-	-	-	100	-	-	-	-	-	-	-	-	-	-	-	-	-	160	-	-
		Smelter Area, geotechnical	SM-SGT-xxx-depth	1	2	3	25	5, 10, N	-	-	-	-	-	-	-	-	-	-	-	-	100	100	-	-	-	-	-	-	-	-	-	-	-	-	6	6
	Waste Management Area	WMU	SM-WMU-xxx-depth	1	9	2	40 to 50	0, 5	100	-	100	100	100	-	-	-	-	-	-	-	-	-	18	-	18	18	18	-	-	-	-	-	-	-	-	-
						3		30, 35, N	100	100	50	50	25	-	-	-	-	-	-	-	-	-	27	27	14	14	7	-	-	-	-	-	-	-	-	-
		WDA	SM-WDA-xxx-depth	1	6	1	10 to 20	0	100	-	100	100	100	-	-	-	-	-	-	-	-	-	6	-	6	6	6	-	-	-	-	-	-	-	-	-
						1		5	100	100	100	100	100	-	-	-	-	-	-	-	-	-	6	6	6	6	6	-	-	-	-	-	-	-	-	-
						1		N	100	100	-	-	-	-	-	-	-	-	-	-	-	-	6	6	-	-	-	-	-	-	-	-	-	-	-	-
		Immediatley north of WDA	SM-WNO-xxx-depth	1	4	2	3	0, 2	100	100	-	-	-	-	-	-	-	-	-	-	-	-	8	8	-	-	-	-	-	-	-	-	-	-	-	-
		East Bank of OID	SM-ODE-xxx-depth	1	6	4	15 to 20	0, 5, 10, N	100	100	-	-	-	-	-	-	-	-	-	-	-	-	24	24	-	-	-	-	-	-	-	-	-	-	-	-
		Top of WMU, CPT, shallow	SM-WCP-xxx-depth	1	2	Continuous	50	Continuous	-	-	-	-	-	-	-	-	-	-	-	100	-	-	-	-	-	-	-	-	-	-	-	-	-	100	-	-
		Edges of WMU, CPT, deep	SM-WCP-xxx-depth	1	2	Continuous	160	Continuous	-	-	-	-	-	-	-	-	-	-	-	100	-	-	-	-	-	-	-	-	-	-	-	-	-	320	-	-
		WMU, geotechnical	SM-WGT-xxx-depth	1	2	3	35	10, 20, 30	-	-	-	-	-	-	-	-	-	-	-	-	100	100	-	-	-	-	-	-	-	-	-	-	-	-	6	6
	NCL East	Land, above 8' contour	SM-NEL-xxx-depth	1	21	1	Surface	0	100	100	-	-	-	-	-	-	-	-	5	-	-	-	21	21	-	-	-	-	-	-	-	-	1	-	-	-
		Land, below and at 8' contour	SM-NEL-xxx-depth	1	40	2	3	0, 2	100	100	-	-	-	-	-	-	-	-	1	-	-	-	80	80	-	-	-	-	-	-	-	-	1	-	-	-
		Land, above 8' contour	SM-NEL-xxx-depth	1	4	3	3	0, 0.1, 2 (*)	100	100	-	-	-	-	-	-	-	-	-	-	-	-	12	12	-	-	-	-	-	-	-	-	-	-	-	-
	NCL North	Background	SM-NNB-xxx-depth	1	6	1	Surface	0	100	100	-	-	-	-	-	-	-	-	-	-	-	-	6	6	-	-	-	-	-	-	-	-	-	-	-	-
		Pond	SM-NNP-xxx-depth	1	2	1	Surface	0	100	100	-	-	-	-	-	-	-	-	-	-	-	-	2	2	-	-	-	-	-	-	-	-	-	-	-	-
		Ditch north of WDA	SM-NND-xxx-depth	1	4	1	Surface	0	100	100	-	-	-	-	-	-	-	-	-	-	-	-	4	4	-	-	-	-	-	-	-	-	-	-	-	-
		Land	SM-NNL-xxx-depth	1	4	3	3	0, 0.1, 2 (*)	100	100	-	-	-	-	-	-	-	-	10	-	-	-	12	12	-	-	-	-	-	-	-	-	1	-	-	-
	Hueneme Par.	East of Site	SM-HUP-xxx-depth	1	4	3	3	0, 0.1, 2 (*)	100	100	-	-	-	-	-	-	-	-	10	-	-	-	12	12	-	-	-	-	-	-	-	-	1	-	-	-
	OID	Through Site	SM-OID-xxx-depth	1	7	3	5	0, 2, 4	100	100	50	50	50	-	-	-	-	-	-	-	-	-	21	21	11	11	11	-	-	-	-	-	-	-	-	-
		North of Site	SM-OID-xxx-depth	1	7	2	3	0,2	100	100	50	50	50	-	-	-	-	-	-	-	-	-	14	14	7	7	7	-	-	-	-	-	-	-	-	-
	Lagoon	Lagoon, main area	SM-LGM-xxx-depth	1	10	3	5	0, 2, 4	100	100	50	50	50	-	-	-	-	-	-	-	-	-	30	30	15	15	15	-	-	-	-	-	-	-	-	-
		Lagoon, finger extensions	SM-LGF-xxx-depth	1	12	2	3	0, 2	100	100	50	50	50	-	-	-	-	-	-	-	-	-	24	24	12	12	12	-	-	-	-	-	-	-	-	-
		Lagoon, geotechnical	SM-LGT-xxx-depth	1	4	1	3	0	-	-	-	-	-	-	-	-	-	-	-	-	100	-	-	-	-	-	-	-	-	-	-	-	-	-	4	-
	Loading Dock	Loading dock perimeter	SM-RLD-xxx-depth	1	6	1	Surface	0	100	100	-	-	-	-	-	-	-	-	-	-	-	-	6	6	-	-	-	-	-	-	-	-	-	-	-	-
	McWane Blvd East	Road	SM-MBR-xxx-depth	1	4	2	3	0, 2	100	100	-	-	-	-	-	-	-	-	-	-	-	-	8	8	-	-	-	-	-	-	-	-	-	-	-	-
		Immediately south of road	SM-MBS-xxx-depth	1	4	2	3	0, 2	100	100	-	-	-	-	-	-	-	-	-	-	-	-	8	8	-	-	-	-	-	-	-	-	-	-	-	-
	Wetland	Background	SM-WLB-xxx-depth	1	6	1	Surface	0	100	100	-	-	-	-	-	-	-	-	-	-	-	-	6	6	-	-	-	-	-	-	-	-	-	-	-	-
		West Area	SM-WLW-xxx-depth	1	12	2	3	0, 2	100	100	-	-	-	-	-	-	-	-	-	-	-	-	24	24	-	-	-	-	-	-	-	-	-	-	-	-
		East Area	SM-WLE-xxx-depth	1	8	2	3	0, 2	100	100	-	-	-	-	-	-	-	-	-	-	-	-	16	16	-	-	-	-	-	-	-	-	-	-	-	-
		Ditch south of WMU	SM-DSA-xxx-depth	1	8	3	5	0, 2, 4	100	100	-	-	-	-	-	-	-	-	-	-	-	-	24	24	-	-	-	-	-	-	-	-	-	-	-	-
		5 feet south of WMU Ditch	SM-DSB-xxx-depth	1	8	2	3	0, 2	100	100	-	-	-	-	-	-	-	-	-	-	-	-	16	16	-	-	-	-	-	-	-	-	-	-	-	-
		15 feet south of WMU Ditch	SM-DSC-xxx-depth	1	8	2	3	0, 2	100	100	-	-	-	-	-	-	-	-	-	-	-	-	16	16	-	-	-	-	-	-	-	-	-	-	-	-
	Beach Dunes	Background	SM-BBG-xxx-depth	1	6	1	Surface	0	100	100	-	-	-	-	-	-	-	-	-	-	-	-	6	6	-	-	-	-	-	-	-	-	-	-	-	-
		Breaches	SM-BBR-xxx-depth	1	6	4	10 to 15	0', 2', 4', 6' Elev.	100	100	-	-	-	-	-	-	-	-	-	-	-	-	24	24	-	-	-	-	-	-	-	-	-	-	-	-
Soil Gas (SG)	WMU	WMU	SG-WSG-xxx-depth	1	2	3	10, 20, 35	5, 15, 30	-	-	100	-	-	100	-		100	-	-	-	-	-	-	-	6	-	-	6	-	-	6	-	-	-	-	-
	Smelter Parcel	Smelter Area	SG-SSG-xxx-depth	1	6	1	10	5	-	-	100	-	-	100	-		100	100	-	-	-	-	-	-	6	-	-	6	-	-	6	6	-	-	-	-

TABLE 4-1
Summary of Planned RI Samples
Halaco Site Remedial Investigation

									Frequency of Analysis (%)														Number of Samples													
									Chemical										Geotechnical			Chemical											Geotechnical		
Matrix	Area	Subarea	Sample ID	No. of Sample Events	No. of Sample Loca-tions	No. of Sample or Well Depths/ Location	Boring or Well Depth (feet, bgs)	Sample Depths (feet, bgs)	Metals (**)	Radionuclides	VOCs	SVOC, TPH	PCBs and Dioxins	Ammonia	General Chem. and Tracers	Field (EC, pH, T, Eh, DO, turbidity)	H2, CH4 CO, CO2, O2, Acetylene	H2S	TOC and pH	CPT (feet)	Grain Size, Atterberg Limits	Moisture, Density, Modified Proctor, Direct Shear	Metals	Radionuclides	VOCs	SVOC, TPH	PCBs and Dioxins	Ammonia	General Chem. and Tracers	Field (EC, pH, T, Eh, DO, turbidity)	H2, CH4 CO, CO2, O2, Acetylene	H2S	TOC and pH	CPT (feet)	Grain Size, Atterberg Limits	Moisture, Density, Modified Proctor, Direct Shear (***)
Surface Water (SW)	Site	OID	SW-OID-xxx-date	2	8	1	n/a	Surface	200	100	-	-	-	100	100	100	-	-	25	-	-	-	32	16	-	-	-	16	16	16	-	-	4	-	-	-
		Lagoon	SW-LAG-xxx-date	2	2	1	n/a	Surface	200	100	-	-	-	100	100	100	-	-	50	-	-	-	8	4	-	-	-	4	4	4	-	-	2	-	-	-
		Ditch south of WMU	SW-WMU-xxx-date	2	2	1	n/a	Surface	200	100	-	-	-	100	100	100	-	-	50	-	-	-	8	4	-	-	-	4	4	4	-	-	2	-	-	-
		NCL East	SW-NCE-xxx-date	2	3	1	n/a	Surface	200	100	-	-	-	100	100	100	-	-	33	-	-	-	12	6	-	-	-	6	6	6	-	-	2	-	-	-
	Background	Hueneme Drain	SW-HUD-xxx-date	2	1	1	n/a	Surface	200	100	-	-	-	100	100	100	-	-	100	-	-	-	4	2	-	-	-	2	2	2	-	-	2	-	-	-
		J Street Drain	SW-JSD-xxx-date	2	1	1	n/a	Surface	200	100	-	-	-	100	100	100	-	-	100	-	-	-	4	2	-	-	-	2	2	2	-	-	2	-	-	-
		Ocean surf line	SW-OCE-xxx-date	2	2	1	n/a	Surface	200	100	-	-	-	100	100	100	-	-	-	-	-	-	8	4	-	-	-	4	4	4	-	-	-	-	-	-
Ground-water	Semi-perched Aquifer	Existing wells, shallow	Well_Name-date	2	18	1	10 to 30	Well screen	200	100	50	50	-	100	100	100	-	-	-	-	-	-	72	36	18	18	-	36	36	36	-	-	-	-	-	-
		New wells, shallow	Well_Name-date	2	8	1	20 to 25	Well screen	200	100	50	50	-	100	100	100	-	-	-	-	-	-	32	16	8	8	-	16	16	16	-	-	-	-	-	-
		New wells, medium	Well_Name-date	2	4	1	50 to 100	Well screen	200	100	50	50	-	100	100	100	-	-	-	-	-	-	16	8	4	4	-	8	8	8	-	-	-	-	-	-
		New wells, deep	Well_Name-date	2	4	1	100 to 150	Well screen	200	100	50	50	-	100	100	100	-	-	-	-	-	-	16	8	4	4	-	8	8	8	-	-	-	-	-	-
		New piezometers, shallow	Well_Name-date	2	4	3	10 to 30	Well screen	-	-	-	-	-	-	-	100	-	-	-	-	-	-	-	-	-	-	-	-	-	24	-	-	-	-	-	-
Air (AR)	Upwind	West of Smelter Parcel	AR-UPW-xxx-date	1	1	6	n/a	6 daily samples	100	100	-	-	-	-	-		-	-	-	-	-	-	6	6	-	-	-	-	-	-	-	-	-	-	-	-
	Onsite	East edge of Smelter Parcel	AR-SMP-xxx-date	1	1	6	n/a	6 daily samples	100	100	-	-	-	-	-		-	-	-	-	-	-	6	6	-	-	-	-	-	-	-	-	-	-	-	-
		East edge of WMU	AR-WMU-xxx-date	1	1	6	n/a	6 daily samples	100	100	-	-	-	-	-		-	-	-	-	-	-	6	6	-	-	-	-	-	-	-	-	-	-	-	-
	Downwind	NCL-E	AR-NCE-xxx-date	1	1	6	n/a	6 daily samples	100	100	-	-	-	-	-		-	-	-	-	-	-	6	6	-	-	-	-	-	-	-	-	-	-	-	-
		NCL-N	AR-NCN-xxx-date	1	1	6	n/a	6 daily samples	100	100	-	-	-	-	-		-	-	-	-	-	-	6	6	-	-	-	-	-	-	-	-	-	-	-	-

Notes: (*) = Sample intervals: 0.0'-0.1', 0.1'-0.5', and 2.0'-2.5' bgs.
(**) = Dissolved and total metals for surface water and groundwater.
(***) For geotechnical samples, direct shear will be analyzed in 6 of 12 samples and modified proctor in 4 of 12 samples.
N = Native
OW = Oxnard Waste from former dump

TABLE 4-2

Numbers of Planned RI Samples

Halaco Site Remedial Investigation

Matrix	Area	No. of Sample Events	No. of Sample Loca-tions	Number of Samples													
				Chemical											Geotechnical		
				Metals	Radionuclides	VOCs	SVOC, TPH	PCBs and Dioxins	Ammonia	General Chem. and Tracers	Field (EC, pH, T, Eh, DO, turbidity)	H2, CH4 CO, CO2, O2, Acetylene	H2S	TOC and pH	CPT (feet)	Grain Size, Atterberg Limits	Moisture, Density, Modified Proctor, Direct Shear (*)
Sample Numbers by Area (number of samples)																	
Solid Matrix	Smelter Parcel	1	47	173	173	79	79	34	-	-	-	-	-	-	185	6	6
	Waste Management Area	1	31	95	71	44	44	37	-	-	-	-	-	-	420	6	6
	NCL East	1	65	113	113	-	-	-	-	-	-	-	-	2	-	-	-
	NCL North	1	16	24	24	-	-	-	-	-	-	-	-	1	-	-	-
	Hueneme Par.	1	4	12	12	-	-	-	-	-	-	-	-	1	-	-	-
	OID	1	14	35	35	18	18	18	-	-	-	-	-	-	-	-	-
	Lagoon	1	26	54	54	27	27	27	-	-	-	-	-	-	-	4	-
	Loading Dock	1	6	6	6	-	-	-	-	-	-	-	-	-	-	-	-
	McWane Blvd East	1	8	16	16	-	-	-	-	-	-	-	-	-	-	-	-
	Wetland	1	50	102	102	-	-	-	-	-	-	-	-	-	-	-	-
	Beach Dunes	1	12	30	30	-	-	-	-	-	-	-	-	-	-	-	-
Soil Vapor	WMU	1	2	-	-	6	-	-	6	-	-	6	-	-	-	-	-
	Smelter Parcel	1	6	-	-	6	-	-	6	-	-	6	6	-	-	-	-
Surface Water	OID	2	8	32	16	-	-	-	16	16	16	-	-	4	-	-	-
	Lagoon	2	2	8	4	-	-	-	4	4	4	-	-	2	-	-	-
	Ditch south of WMU	2	2	8	4	-	-	-	4	4	4	-	-	2	-	-	-
	NCL East	2	3	12	6	-	-	-	6	6	6	-	-	2	-	-	-
	Hueneme Drain	2	1	4	2	-	-	-	2	2	2	-	-	2	-	-	-
	J Street Drain	2	1	4	2	-	-	-	2	2	2	-	-	2	-	-	-
	Ocean surf line	2	2	8	4	-	-	-	4	4	4	-	-	-	-	-	-
Ground-water	Existing wells, shallow	2	18	72	36	18	18	-	36	36	36	-	-	-	-	-	-
	New wells, shallow	2	8	32	16	8	8	-	16	16	16	-	-	-	-	-	-
	New wells, medium	2	4	16	8	4	4	-	8	8	8	-	-	-	-	-	-
	New wells, deep	2	4	16	8	4	4	-	8	8	8	-	-	-	-	-	-
	New piezometers, shallow	2	4	-	-	-	-	-	-	-	24	-	-	-	-	-	-
Air	Upwind	1	1	6	6	-	-	-	-	-	-	-	-	-	-	-	-
	Onsite	1	2	12	12	-	-	-	-	-	-	-	-	-	-	-	-
	Downwind	1	2	12	12	-	-	-	-	-	-	-	-	-	-	-	-
Sample Numbers by Media (number of samples)																	
Solid Matrix		1	279	660	636	167	167	115	-	-	-	-	-	4	605	16	12
Soil Vapor		1	8	-	-	12	-	-	12	-	-	12	6	-	-	-	-
Surface Water (events for high and low water conditions)		2	19	76	38	-	-	-	38	38	38	-	-	14	-	-	-
Groundwater (events for high and low water conditions)		2	38	136	68	34	34	-	68	68	92	-	-	-	-	-	-
Air (6 daily samples for event)		1	5	30	30	-	-	-	-	-	-	-	-	-	-	-	-
Total			349	902	772	213	201	115	118	106	130	12	6	18	605	16	12

Notes: (*) For geotechnical samples, direct shear will be analyzed in 6 of 12 samples and modified proctor in 4 of 12 samples.

Table 6-1
Monitoring Well Construction, Elevations, and Depths
Halaco Site Remedial Investigation

Well Type	Well Diameter (inches)	Well Casing and Screen Materials	Approximate Total Depth (feet, bgs)	Well Screen Length	Approximate Top of Screen Elevation (feet, NAVD 88)	Approximate Bottom of Screen Elevation (feet, NAVD 88)	Well	Surface Completion (A/F)	Approximate Ground Surface Elevation (feet, NAVD 88)	Approximate Depth to Top of Screen (feet, bgs)	Approximate Depth to Bottom of Screen (feet, bgs)
Shallow	2	Sch 40 PVC	20 to 25	10	0	-10	MW-20	F	15	15	25
							MW-21	F	11	11	21
							MW-22	F	10	10	20
							MW-23	A	11	11	21
							MW-24	A	12	12	22
							MW-25	A	10	10	20
							MW-26	A	10	10	20
							MW-27	A	10	10	20
Medium	2	Sch 80 PVC	50 to 100	10	tbd	tbd	MW-2C	A	25 to 30	tbd	tbd
							MW-3C	A	25 to 30	tbd	tbd
							MW-6C	A	20 to 25	tbd	tbd
							MW-19C	A	15 to 20	tbd	tbd
Deep	2	Sch 80 PVC	100 to 150	10	tbd	tbd	MW-2D	A	25 to 30	tbd	tbd
							MW-3D	A	25 to 30	tbd	tbd
							MW-6D	A	20 to 25	tbd	tbd
							MW-19D	A	15 to 20	tbd	tbd

Notes:

A = Above ground well completion (above ground monument).
F = Flush mount well completion (below ground vault).
tbd = To be determined.
bgs = Below ground surface.
NAVD = North American Vertical Datum of 1988.

Table 6-2
Oxnard Sewer Line Construction, Evaluations, and Depths
Halaco Site Remedial Investigation

Manhole	Approximate Distance between Manholes	Approximate Cumulative Distance along Manholes	Sewer Pipe Diameter (inch)	Sewer Pipe Diameter (feet)	Pipe Invert Elevation (1929 NGVD)	Depth to Pipe Invert (feet)	Elevation (feet, NAVD 88)		
							Street or Ground	Sewer Pipe Top	Sewer Pipe Bottom
BBC-03	0	0	42	3.5	-15	21.8	9.4	-8.9	-12.4
BBC-04	500	500	42	3.5	-14.2	22.1	10.5	-8.1	-11.6
BBC-05	200	700	42	3.5	-13.85	19.8	8.55	-7.75	-11.25
BBC-06	325	1025	42	3.5	-13.36	19.46	8.7	-7.26	-10.76
BBC-07	325	1350	42	3.5	-12.99	19.19	8.8	-6.89	-10.39
BBC-08	125	1475	42	3.5	-12.67	18.37	8.3	-6.57	-10.07
BBC-09	325	1800	42	3.5	-12.19	18.59	9	-6.09	-9.59
BBC-10	300	2100	42	3.5	-11.72	18.82	9.7	-5.62	-9.12

Table 6-3
Piezometer Construction, Elevations and Depths
Halaco Site Remedial Investigation

Piezometer	Piezometer Diameter (inch)	Well Casing and Screen Materials	Screened Interval	Cumulative Distance along Manholes	Depth to Well Screen Top (feet, bgs)	Depth to Well Screen Bottom (feet, bgs)	Elevation (feet, NAVD 88)		
							Street or Ground	Well Screen Top	Well Screen Bottom
PZ-1	0.75	Pre-pack	A	150	9.5	10.5	9.5	0	-1
			B	175	19.5	20.5	9.5	-10	-11
			C	200	31.5	32.5	9.5	-22	-23
PZ-2	0.75	Pre-pack	A	375	9.5	10.5	10	0.5	-0.5
			B	400	19.5	20.5	10	-9.5	-10.5
			C	425	31.5	32.5	10	-21.5	-22.5
PZ-3	0.75	Pre-pack	A	825	8	9	9	1	0
			B	850	18	19	9	-9	-10
			C	875	30	31	9	-21	-22
PZ-4	0.75	Pre-pack	A	1200	7	8	9	2	1
			B	1225	17	18	9	-8	-9
			C	1250	29	30	9	-20	-21

Note:
Piezometer screens are 1-foot long.
NAVD 88 = North American Vertical Datum of 1988.

Figures

Aerial image © Google Earth, 2007. Annotation by CH2M HILL, 2008.

FIGURE 1
Halaco Site
Halaco Site, Oxnard, California

CH2MHILL

FIGURE 2
Site Location and Areas
Halaco Site, Oxnard, California

Source: Figure 2-1, Integrated Assessment Report (Weston, 2007)

CH2MHILL

ES122007006SAC Figure_2.ai 01.21.09 tdaus

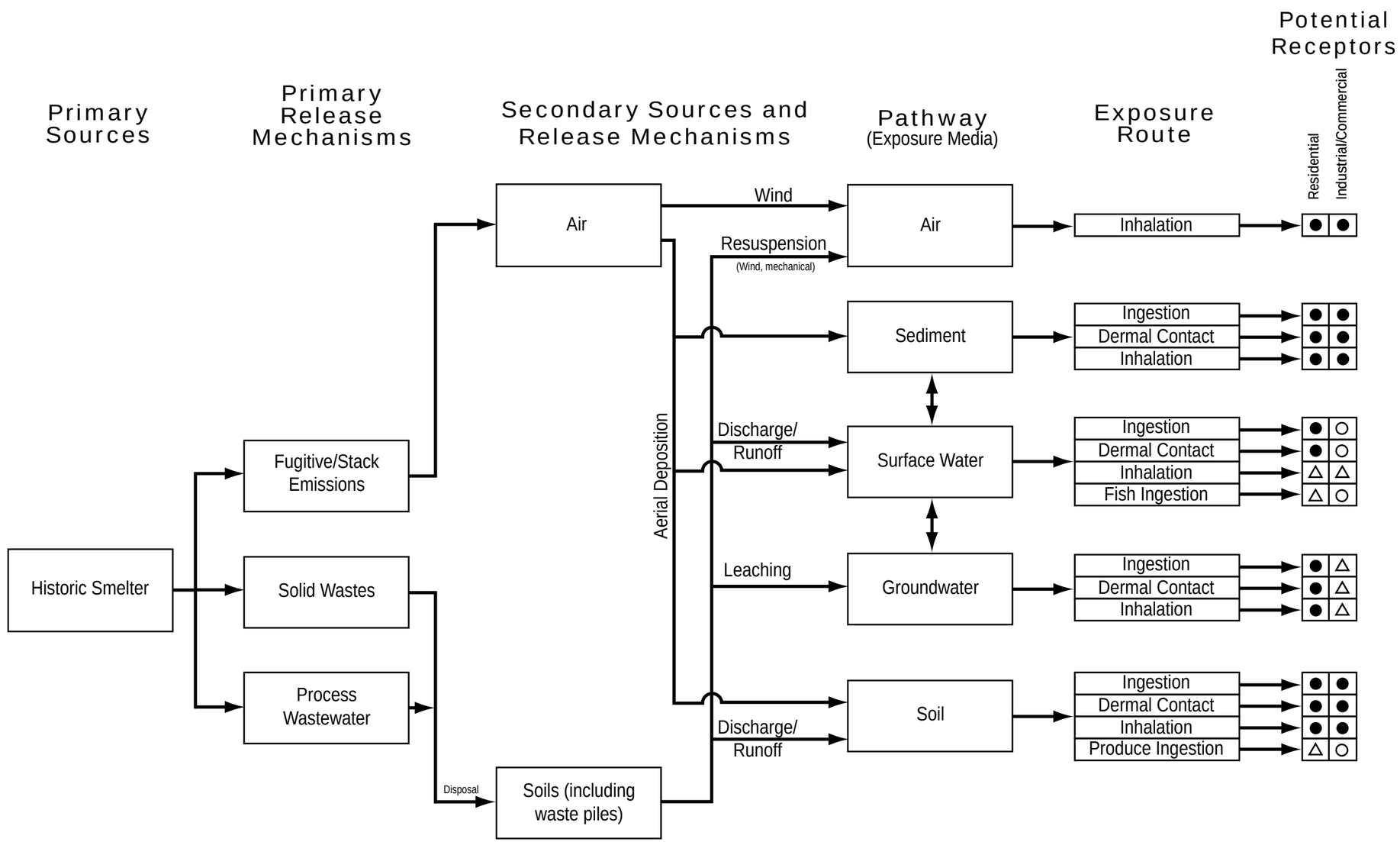

LEGEND:

- ● = Potentially complete exposure pathway
- ○ = Incomplete exposure pathway
- N = Pathway not applicable
- △ = Possibly complete exposure pathway, but likely not significant

FIGURE 3
Conceptual Site Model Diagram
Screening-level Human Health Risk Assessment
Halaco Site, Oxnard, California

ES122007006SAC Figure_3.ai 01.22.09 tdaus

CH2MHILL

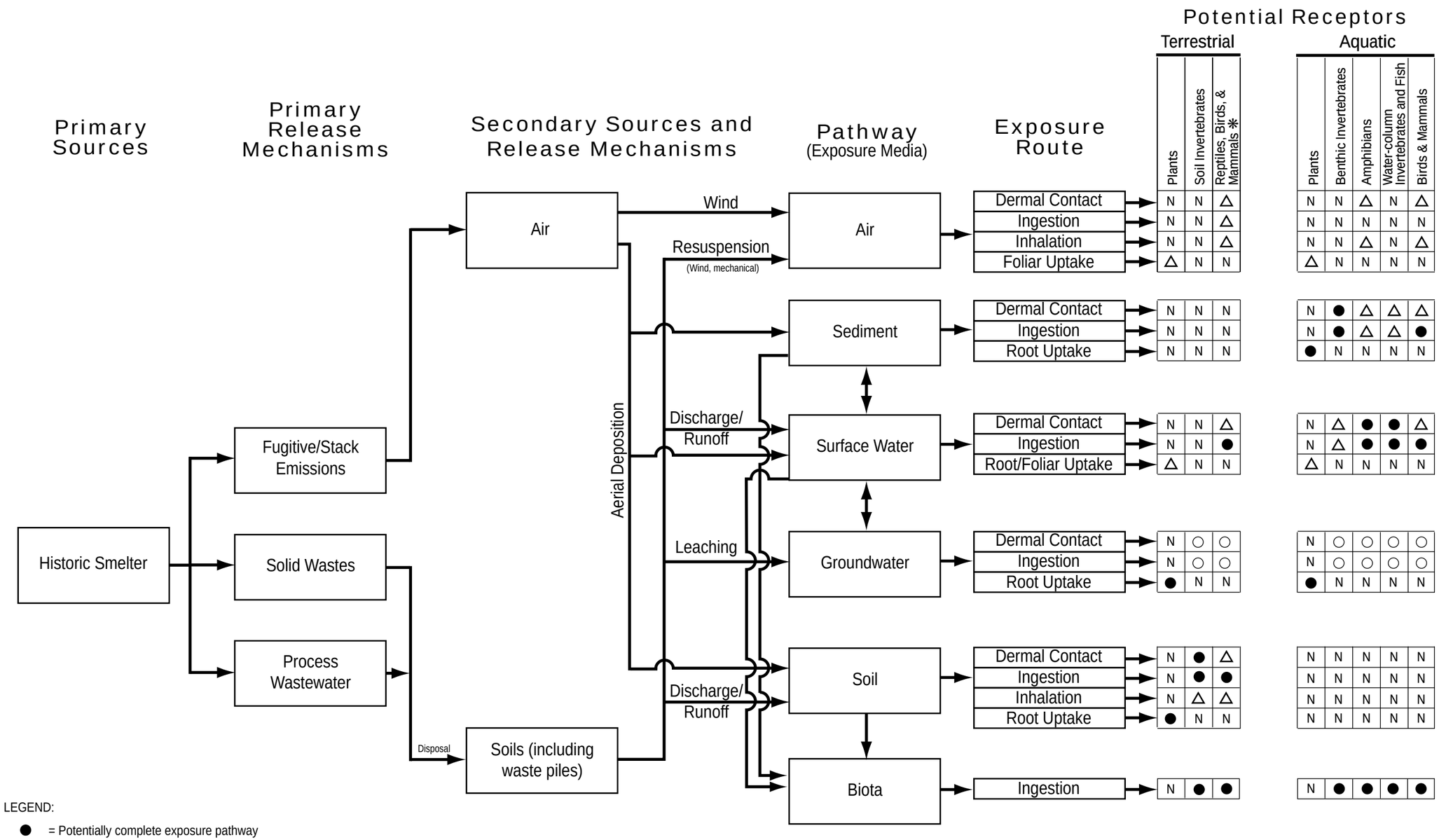

LEGEND:

- ● = Potentially complete exposure pathway
- ○ = Incomplete exposure pathway
- N = Pathway not applicable
- △ = Possibly complete exposure pathway, but likely not significant or insufficient data for analysis in a Screening Level Ecological Risk Assessment

* Data required to evaluate exposure and effects to reptiles are lacking; therefore reptiles were not evaluated. Instead, analyses for birds were assumed to be representative of reptiles.

FIGURE 4
Conceptual Site Model Diagram
Screening-level Ecological Risk Assessment
Halaco Site, Oxnard, California

CH2MHILL

ES122007006SAC Figure_4.ai 01.21.09 tdaus

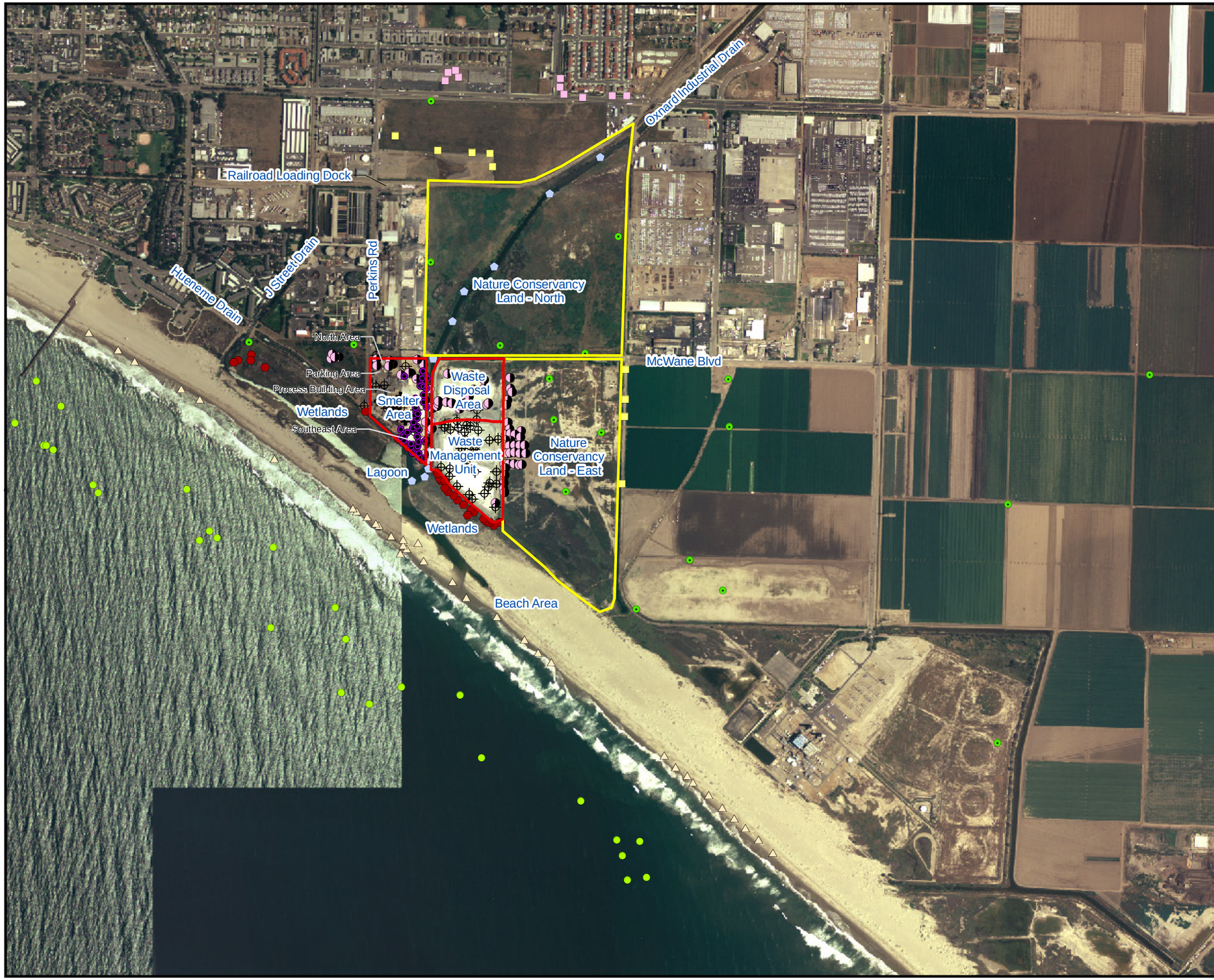

LEGEND

Integrated Assessment Report Investigation (Weston, 2007)

- Surface Sediment Sample (SDF)
- Residential Soil Sample (SSR)
- Agricultural Soil Sample (SSA)
- Soil Sample (SSN)
- Soil Boring (SSN)
- Soil Boring (SW)
- Wetlands Sediment Sample (SWL)
- Beach Sediment Sample (SDB)
- Marine Sediment Sample (SDM)
- Waste Samples from Smelter Area (SWF)

Southeast Smelter Investigation (Team 9, 2008)

- SE Smelter Soil or Sediment Samples

Ormand Beach Wetlands Restoration Investigation (AMEC, 2006)

- AMEC Soil or Sediment Samples

N

800 400 0 800 Feet

FIGURE 5
Areas Recommended for Additional Sampling

HALACO SITE
OXNARD, CALIFORNIA

CH2MHILL

BAO \\ZINFANDEL\PROJ\USENVIRONMENTALPROTE\358156HALACO\GIS\MAPFILES\2009\ADDITIONAL_SAMPLE_AREAS.MXD 1/22/2009 09:56:45

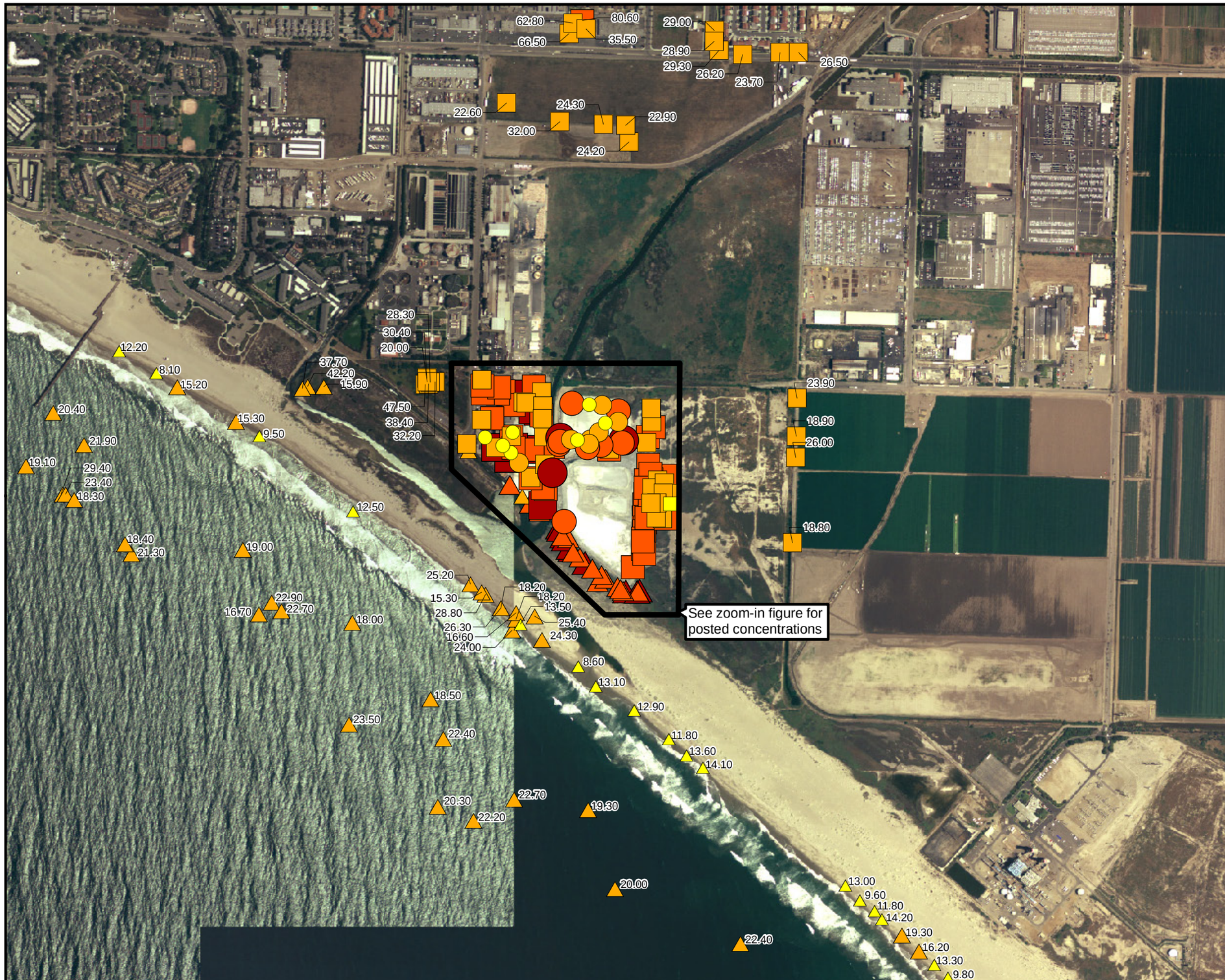

LEGEND
Lead Results in mg/kg

Waste Samples
- < 15
- 15 - 70
- 70 - 250
- > 250

Soil Samples
- < 15
- 15 - 70
- 70 - 250
- > 250

Sediment Samples
- < 15
- 15 - 70
- 70 - 250
- > 250

164.00 (Lead Result; mg/kg)

Notes:
1. Data obtained from field X-ray fluorescence (XRF) analysis.
2. Shallow soil data from zero to less than 5-feet below ground surface.

N

800 400 0 800 Feet

FIGURE 6a
Bubble Plots Depicting Shallow Soil and Sediment Contamination, Zoom-out

HALACO SITE
OXNARD, CALIFORNIA

CH2MHILL

BAO \\ZINFANDEL\PROJ\USENVIRONMENTALPROTE\358156HALACO\GIS\MAPFILES\2009\SHALLOW_SOIL_ZOOMOUT.MXD 1/21/2009 13:22:33

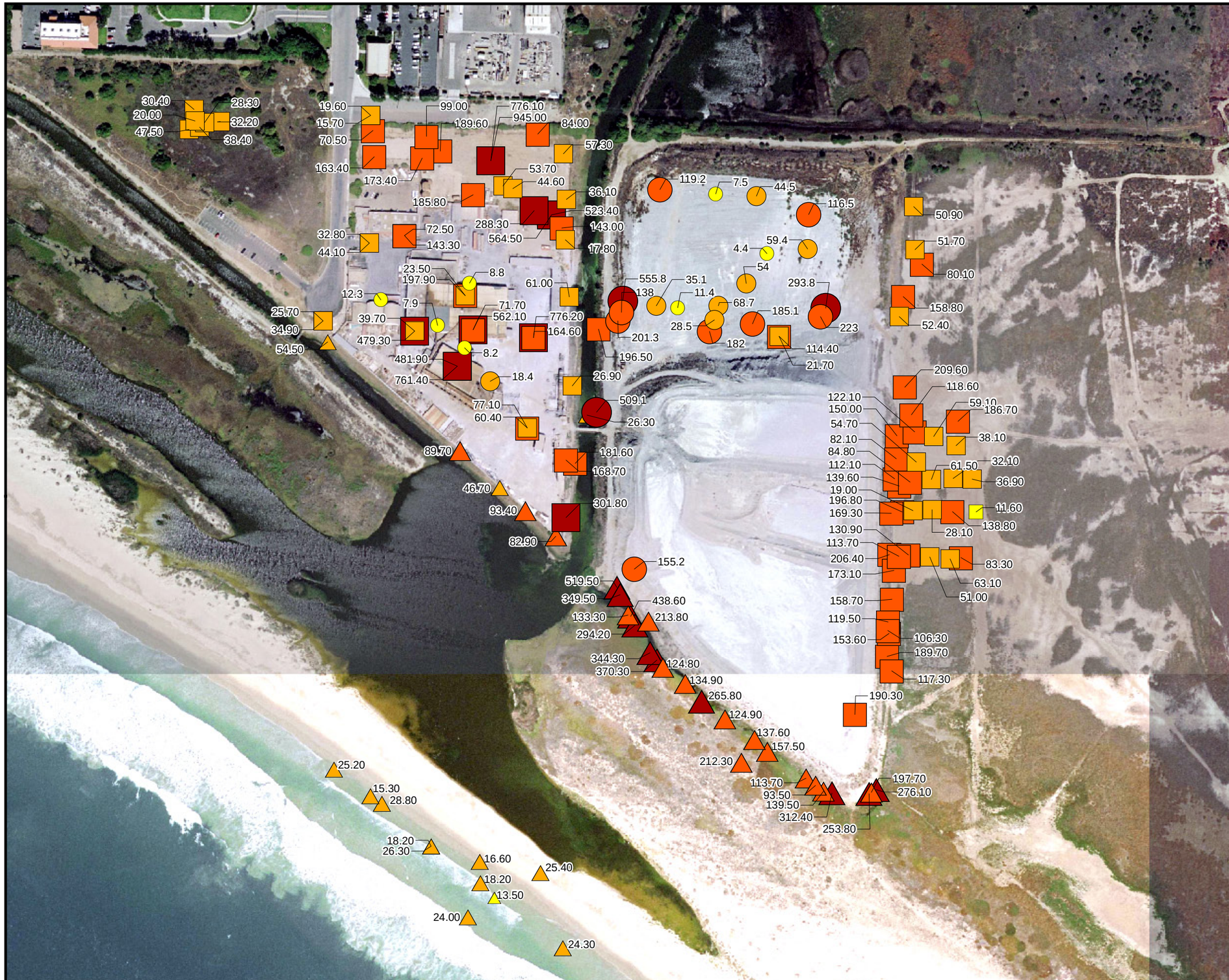

LEGEND
Lead Results in mg/kg

Waste Samples

- < 15
- 15 - 70
- 70 - 250
- > 250

Soil Samples

- < 15
- 15 - 70
- 70 - 250
- > 250

Sediment Samples

- < 15
- 15 - 70
- 70 - 250
- > 250

164.00 (Lead Result; mg/kg)

Notes:
1. Data obtained from field X-ray fluorescence (XRF) analysis.
2. Shallow soil data from zero to less than 5-feet below ground surface.

N

250 125 0 250 Feet

FIGURE 6b
Bubble Plots Depicting Shallow Soil and Sediment Contamination, Zoom-in

HALACO SITE
OXNARD, CALIFORNIA

CH2MHILL

BAO \\ZINFANDEL\PROJ\USENVIRONMENTALPROTE\358156HALACO\GIS\MAPFILES\2009\SHALLOW_SOIL_ZOOMIN.MXD 1/21/2009 13:21:27

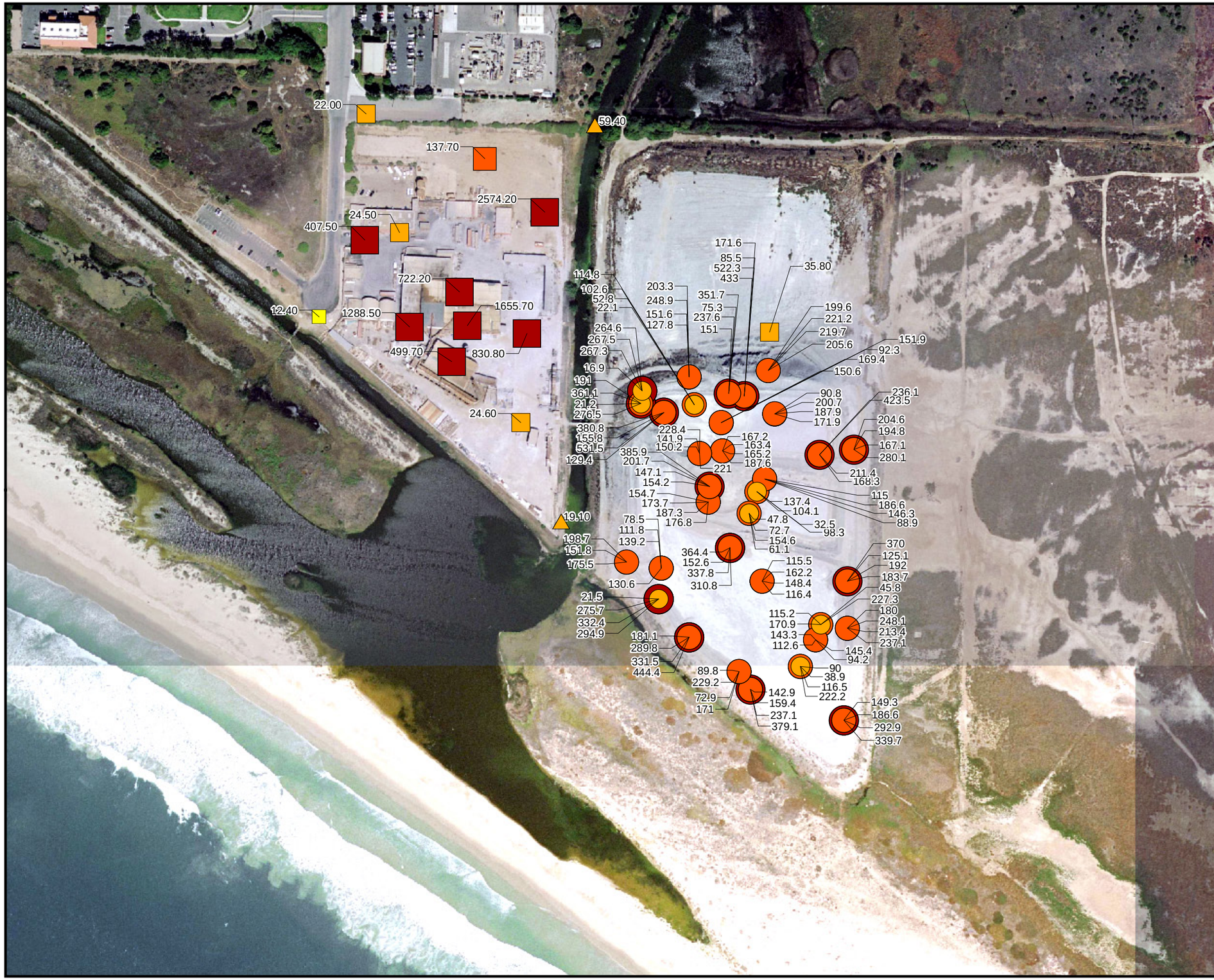

LEGEND
Lead Results in mg/kg

Waste Samples

- < 15
- 15 - 70
- 70 - 250
- > 250

Soil Samples

- < 15
- 15 - 70
- 70 - 250
- > 250

Sediment Samples

- < 15
- 15 - 70
- 70 - 250
- > 250

164.00 (Lead Result; mg/kg)

Notes:
1. Data obtained from field X-ray fluorescence (XRF) analysis.
2. Deep soil data from greater than 5-feet below ground surface.

N

250 125 0 250
Feet

FIGURE 6c
Bubble Plots Depicting Deep Soil and Sediment Contamination, Zoom-in

HALACO SITE
OXNARD, CALIFORNIA

CH2MHILL

BAO \\ZINFANDEL\PROJ\USENVIRONMENTALPROTE\358156HALACO\GIS\MAPFILES\2009\DEEP_SOIL_ZOOMIN.MXD 1/21/2009 13:25:39

Copper

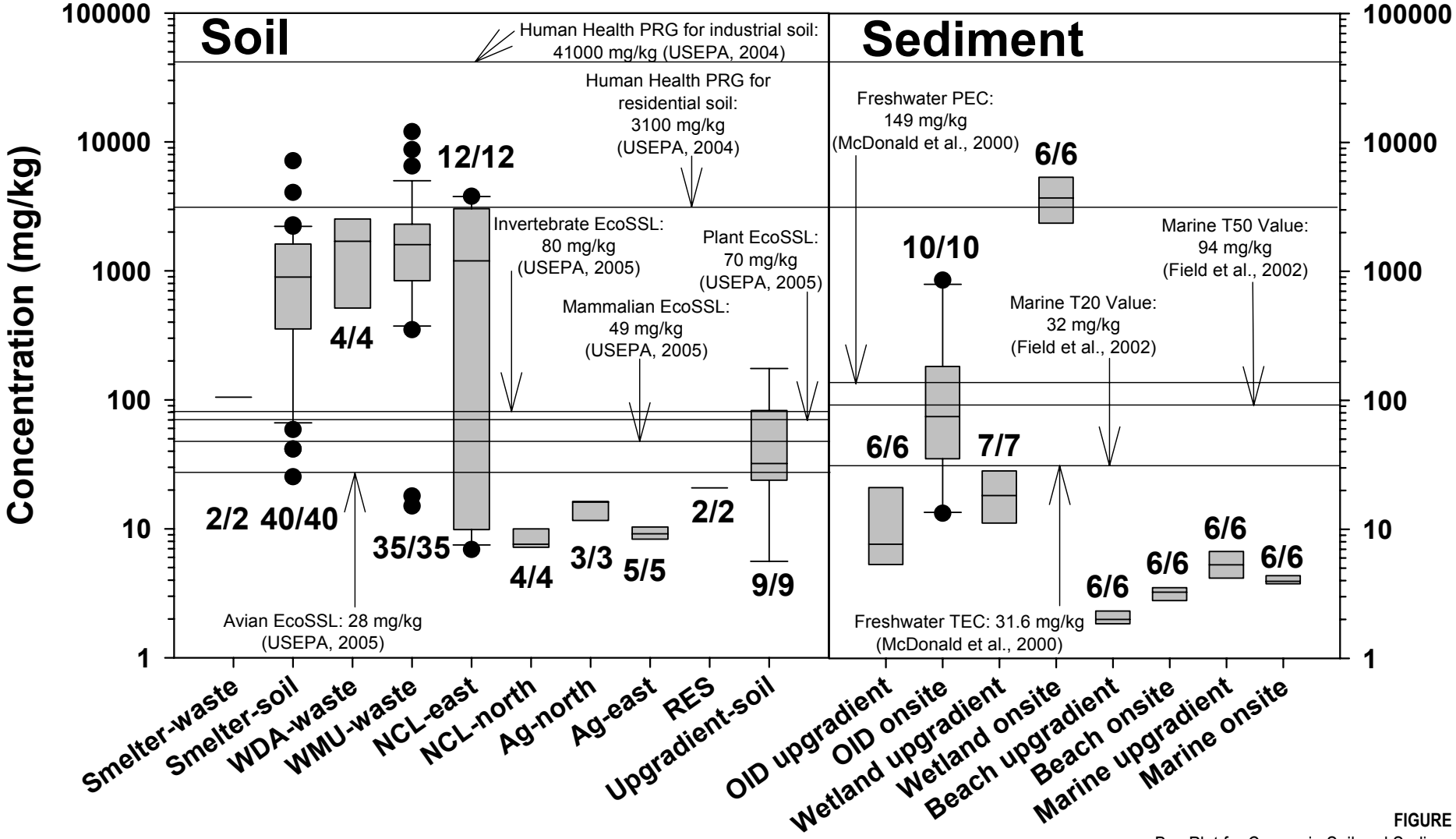

Note: 1. 2/2 = Number of samples/number of detections.
2. See CH2M HILL (2008b) for references within the box plot.

FIGURE 7
Box Plot for Copper in Soil and Sediment
Halaco Site, Oxnard, California

CH2MHILL

WB012009003SCO385135.DE.01 Halaco_boxplots.ai 1/09

LEGEND

- Oil / Fuel Tanks
- Buildings

1. Basemap aerial photo date: 2005.
2. Approximate Tank locations based on review of historical photos & site plan figures obtained from Oxnard CUPA.

N

50 25 0 50 Feet

FIGURE 8
Approximate Locations of Former and Current Oil/Fuel Tanks (1965-2004)

HALACO SITE
OXNARD, CALIFORNIA

CH2MHILL

BAO \\ZINFANDEL\PROJ\USENVIRONMENTALPROTE\358156HALACO\GIS\MAPFILES\2008\HISTORICAL_SITES_FACILITIES.MXD HISTORICAL_SITES_FACILITIES 1/21/2009 13:31:04

LEGEND

Groundwater Monitoring Well

Surface Water Gauging Station

Surface Water Pressure Transducer

Ground Elevation Contours (AMEC, 2006)

2-foot Contours

10-foot Contours

Groundwater Elevation Contours, Shallow Wells

1-foot Contours

Groundwater Elevation Contours, Deeper Wells

1-foot Contours

Aerial Source: YCE Incorporated April 12, 2007.
Datum: ft MSL NAVD 1988.
Groundwater Elevations: December 12, 2007

Figure 9
Groundwater Levels and Monitoring Well Locations

HALACO SITE
OXNARD, CALIFORNIA

CH2MHILL

BAO \\ZINFANDEL\PROJ\USENVIRONMENTALPROTE\358156HALACO\GIS\MAPFILES\2009\GW_MW_LOCS.MXD 1/22/2009 09:40:13

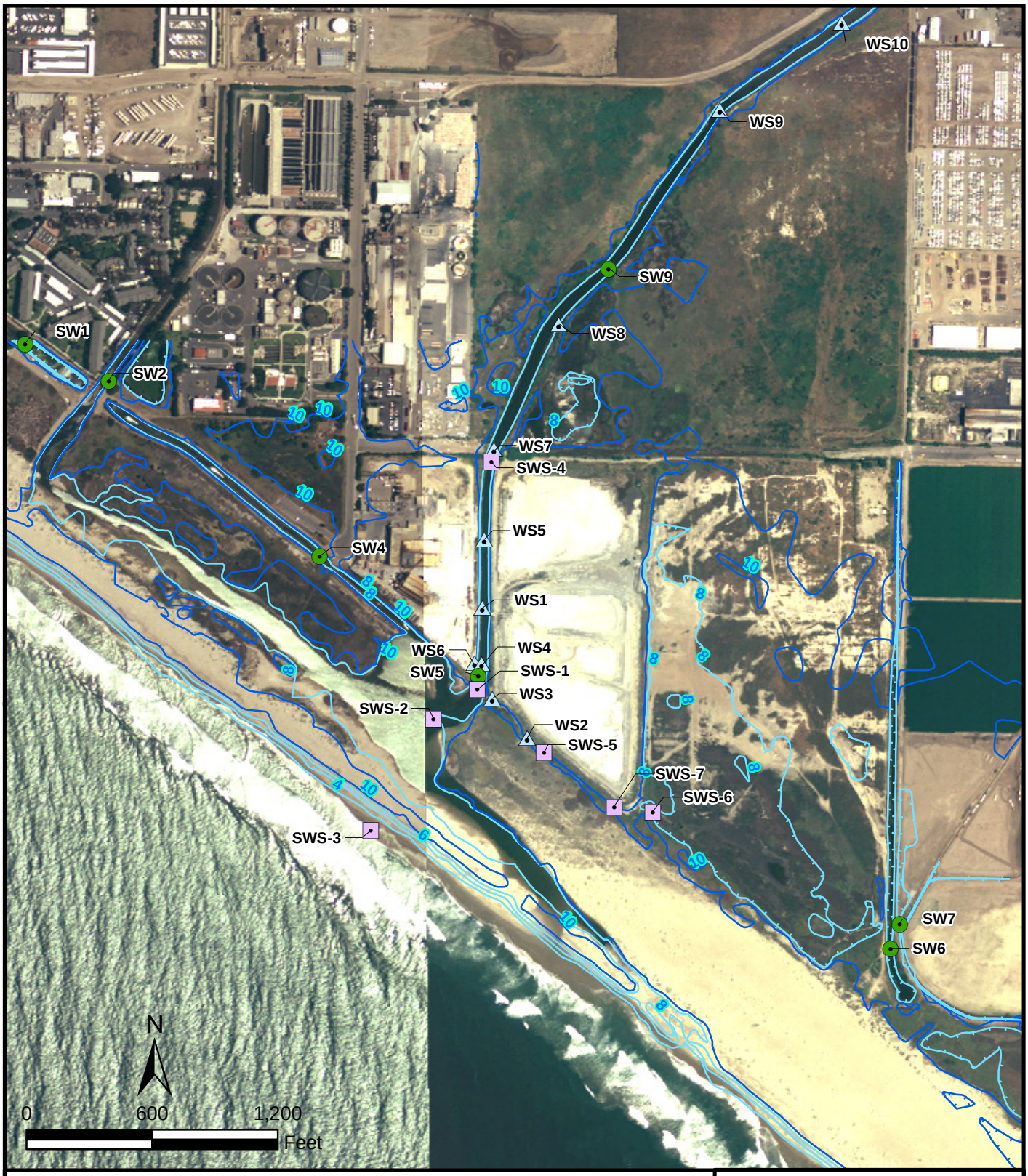

LEGEND

SW	Ormond Beach Regional Investigation (AMEC 2006)
SWS	Halaco Routine Monitoring
WS	Site Integrated Assessment (Weston 2007)

Ground Elevation Contours (AMEC, 2006)

- 2-foot Contours
- 10-foot Contours

Note: Sample locations area approximate.

Figure 10
Surface Water Sampling Locations

HALACO SITE
OXNARD, CALIFORNIA

CH2MHILL

BAO \\ZINFANDEL\PROJ\USENVIRONMENTALPROTE\358156HALACO\GIS\MAPFILES\2009\SW_MW_LOCS.MXD 1/22/2009 09:53:47

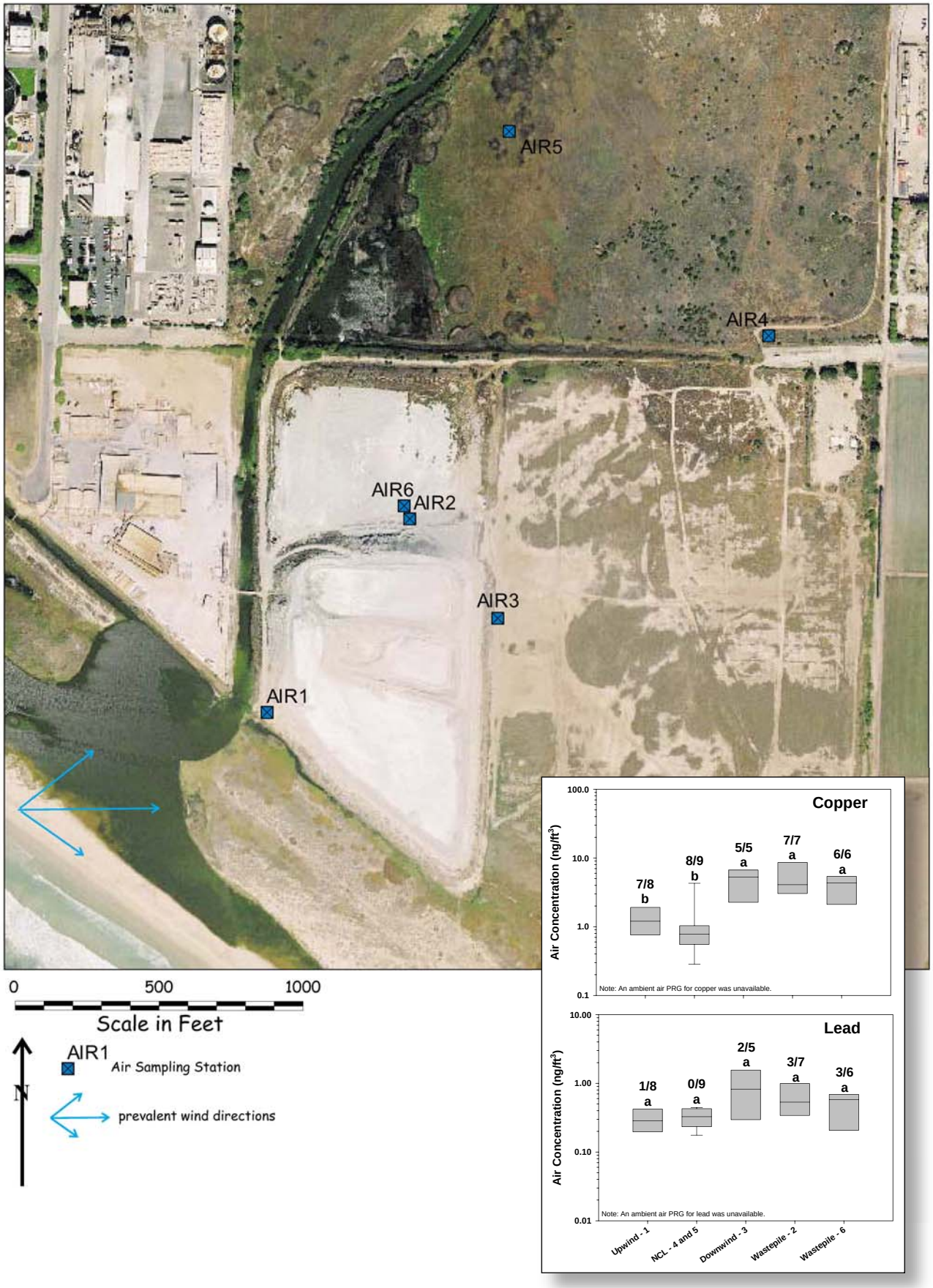

FIGURE 11
Metals Concentrations in Air Samples, June 2006
Halaco Site, Oxnard, California

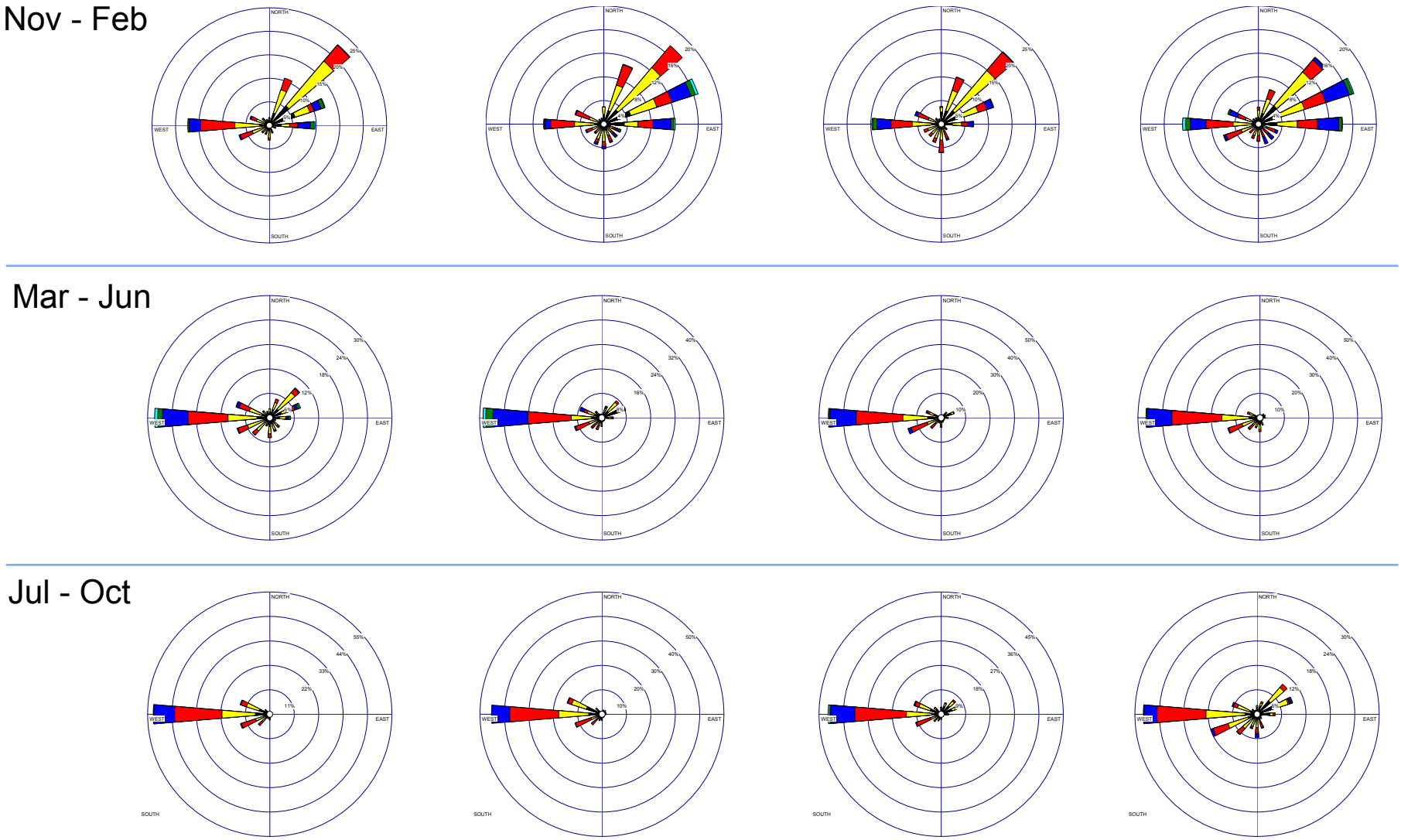

Wind Speed (Knots)

- >21
- 17 - 21
- 11 - 17
- 7 - 11
- 4 - 7
- 1 - 4

FIGURE 12
Monthly Wind Roses for Oxnard Airport
Meteorological Data, 2004 and 2005
Halaco Site, Oxnard, California

CH2MHILL

Figure 6-1
Oxnard Sewer Line and Piezometer Elevations

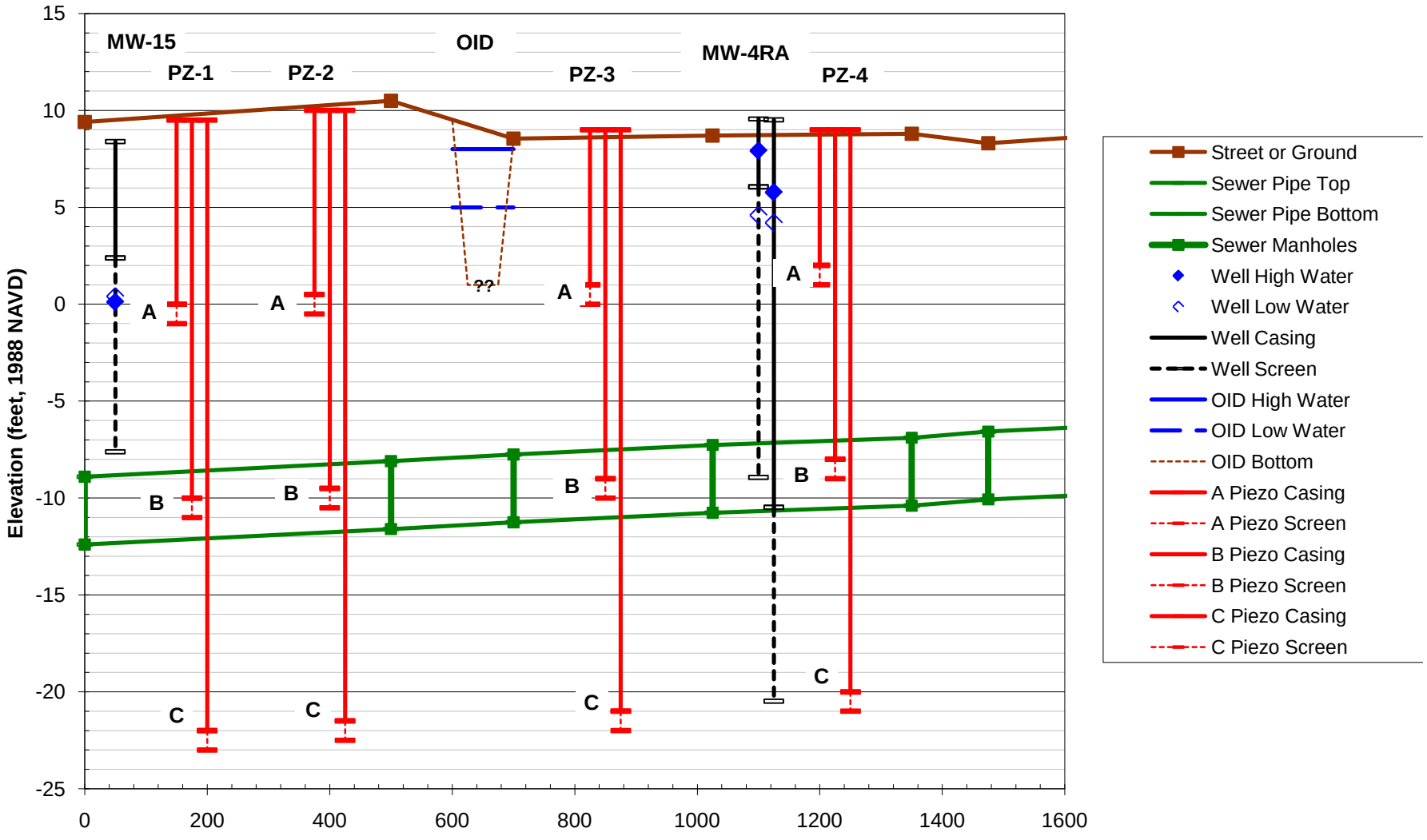

Appendix A
Field Standard Operating Procedures

STANDARD OPERATING PROCEDURE 6-1

Location of Field Sampling Stations with GPS

Purpose and Scope

This Standard Operating Procedure (SOP) provides the Equipment, Materials, Procedures, and Guidelines to locate field sampling stations using Global Positioning System (GPS) equipment for dry land locations. Sample locations will be located and marked prior to field activities using a portable GPS device with horizontal sub-meter accuracy. Locations on dry land will be staked prior to sampling.

References

Field Sampling Plan		
Section	6.1.1	Task 1 – Sample Locating and Staking
Figures	A-1	Solid Matrix Sample Locations, Overview
	A-2	Solid Matrix Sample Locations, Smelter Parcel
	A-3	Solid Matrix Sample Locations, Waste Management Area
	A-4	Solid Matrix Sample Locations, Ditch South of WMU
	A-5	Solid Matrix Sample Locations, NCL East
	A-6	Solid Matrix Sample Locations, NCL North
	A-7	Surface Water Sample Locations
	A-8	Groundwater Monitoring Well Locations
	A-9	Air Sample Locations
	A-10	Transects for Visual Inspection for Presence of Slag Waste
Appendix	B	GPS Coordinates for Sample Locations

Equipment and Materials

The horizontal and vertical positioning equipment will consist of a GPS instrument with Hypack or similar navigation software. The display will be capable of showing the present location of the operator. The equipment will be capable of being pre-programmed with the sampling station locations.

Procedures and Guidelines

Horizontal positioning will be accomplished using differential GPS (DGPS). Position errors with this system typically are within 1 to 3 meters (3.3 to 9.8 feet). The following requirements apply to the GPS instrument and will be verified initially by the CH2M HILL field operations manager and subsequently by the CH2M HILL field team leader during the course of the work:

- The GPS unit will be configured such that satellites less than 15 degrees above the horizon will not be used in position computations.
- A minimum of four satellites will be used for computing all positions.

- The maximum allowable position dilution of precision (PDOP) value is 6.
- The maximum allowable horizontal dilution of precision (HDOP) value is 4.

One to two onsite control points will be used to check the GPS accuracy. These control points will be identified by the field team leader prior to the start of work. The control points used will be logged on the field sheets. Data from the nearest Trimble GPS base station will be used, if needed, to correct GPS data during post-processing. The GPS coordinate system for all positioning information will be noted in the field sheets.

Documentation

The field documentation requirements will include recording all observations made during field activities to document the work and potential issues that could affect the quality of field data. The documentation should be entered in a field logbook with consecutively numbered pages and/or the data collection forms. Documentation should include at a minimum:

- Work/sample location
- Date of field activity
- Personnel on-site
- Time of day
- PPE level
- Field methods and procedures
- Field readings and measurements
- Field observations and comments
- Unusual conditions

Attachments

None.

STANDARD OPERATING PROCEDURE 6-2

Positioning at Below-water Stations with GPS

Purpose and Scope

This Standard Operating Procedure (SOP) provides the Equipment, Materials, Procedures, and Guidelines to locate field sampling stations using Global Positioning System (GPS) equipment for submerged sample locations. Locations submerged with water will be determined at the time that samples are collected using a portable GPS device with horizontal sub-meter accuracy.

References

Field Sampling Plan		
Section	6.1.1	Task 1 – Sample Locating and Staking
Figures	A-1	Solid Matrix Sample Locations, Overview
	A-2	Solid Matrix Sample Locations, Smelter Parcel
	A-3	Solid Matrix Sample Locations, Waste Management Area
	A-4	Solid Matrix Sample Locations, Ditch South of WMU
	A-5	Solid Matrix Sample Locations, NCL East
	A-6	Solid Matrix Sample Locations, NCL North
Appendix	B	GPS Coordinates for Sample Locations

Equipment and Materials

The horizontal positioning equipment will consist of a GPS instrument with Hypack™ or similar navigation software. The display will be capable of showing the present location of the vessel relative to the desired station location and will provide a bearing and distance to the station. The equipment will be capable of being pre-programmed with the National Oceanic and Atmospheric Administration nautical chart and sampling station locations. If normal GPS reception of four or more satellites is not available at a given location because of terrain blocking or other causes, alternative methods will be used to establish positions along a transect.

The vertical position will be determined with the vessel fathometer or depth sounder. In shallow water, a lead line and tape measure or a surveyor's rod may also be used.

Procedures and Guidelines

Horizontal Positioning

Horizontal positioning for below-water stations will be accomplished using differential GPS based on the U.S. Coast Guard Maritime Differential GPS Service signal or traditional GPS if the U.S. Coast Guard differential signal cannot be received. Position errors with this system typically are within 1 to 3 meters (3.3 to 9.8 feet). The following requirements apply to the

GPS instrument and will be verified initially by the CH2M HILL field operations manager and subsequently by the CH2M HILL field team leader (FTL) during the course of the work:

- The GPS unit will be configured so that satellites less than 15 degrees above the horizon will not be used in position computations.
- A minimum of four satellites will be used for computing all positions.
- The maximum allowable position dilution of precision value is 6.
- The maximum allowable horizontal dilution of precision value is 4.

One to two onsite control points will be used to check the GPS accuracy. These control points will be identified by the FTL prior to the start of work and will be located within 100 feet of the Site. The control points used will be logged on the field sheets. Data from the nearest GPS base station will be used, if needed, to correct GPS data during post-processing. The GPS coordinate system for all positioning information will be noted in the field sheets.

The GPS antenna will be mounted on the swing davit or top centerline of the A-frame of the vessel. This will avoid the need for computing distance offsets for the antenna location.

Alternative Horizontal Positioning Methods

If adequate GPS signals are not received, alternative methods for sample positioning will be used based on radar or laser rangefinder information. These methods will measure distances to at least two known points on the nautical chart or to two marker buoys equipped with radar reflectors and light-reflective surfaces. These marker buoys will be deployed according to GPS positioning so that their locations can be plotted on a special navigation grid sheet along with the station locations to be sampled.

If GPS signals can be received at a location on the transect line, a marker buoy will be deployed, and bearings and distances will be used to position the vessel at the desired station locations along the transect.

Positioning the Vessel

The sampling vessel must locate and remain fixed on the general sampling location before sampling can begin**.** The vessel operator (VO) will be responsible for navigating the boat to each sample location according to the sample location coordinates identified in the FSP. For submerged sediment sampling, the vessel will be positioned so that it is within a circle of 5 meters (17 feet) or less around the planned position at the time that the sediment sampler contacts the bottom surface. The CH2M HILL FTL will verify that the sample location is within the allowable position circle. If the actual sample position is outside the 5-meter radius, the vessel will be repositioned and the sample(s) retaken. If conditions are such that the vessel's position cannot be maintained within the 5-meter radius, the sample may be collected outside the allowable position circle. The rationale for positioning more than 5 meters from the planned position will need to be thoroughly documented and reviewed with the CH2M HILL field operations manager at the end of the day.

Submerged sediment samples will be collected without anchoring the vessel except when currents or wind conditions preclude holding the vessel on station within the 5-meter posi-

tion circle. The VO and CH2M HILL FTL will determine whether anchoring is required for collecting the sediment sample.

When the vessel is not under power, it will typically move perpendicular to the wind or current. If the sampling equipment is deployed over the side of the vessel instead of the stern, this will be done on the upwind or upcurrent side to prevent the vessel from drifting onto the hydrowire (winch wire) when the sampler has contacted the bottom. In shallow water (less than about 10 meters deep) with drift rates exceeding about 0.5 meter per second (1.6 feet per second), the sampler might not perform correctly because of its lateral speed when it hits the bottom. In addition, for coring operations, the drift rate could cause the core barrel to bend or break when the barrel penetrates the bottom. Under high drift rates, it will be necessary to either anchor or hold the vessel in position using engine power. The adverse effects of drift rates decrease as the water depth increases because the vessel must drift a longer distance on the surface to pull the sampler or corer out of alignment on the bottom surface.

The vertical angle of the hydrowire will be kept to approximately 5 degrees or less for sampling activities, if possible, and will be measured using a wire angle indicator. When wire angles exceed 5 degrees, the offset error between the vessel and the sampler increases significantly. If this condition occurs, the vessel will be repositioned and another sample attempt made.

Each sample location will be recorded by holding the GPS unit as close as possible over the sediment coring location and marking the way-point at the time the sediment core contacts the bottom of the lake. All marked sampling locations will also be recorded manually in the field notes and stored electronically in the GPS unit. A georeferenced site map with key identifying landmarks will be provided to the field staff. Field staff will mark sampling locations and location numbers as well as possible on this site map. If large discrepancies are noted between the GPS-logged coordinate and the hard-copy map, the FTL will decide which location is most representative.

The VO is responsible at all times for the safe and prudent operation of the vessel and the conditions under which any operation will be performed. This is particularly important for operations under stormy conditions, in shallow water, in strong currents, or in any situation that affects the maneuverability and stability of the boat. Although the CH2M HILL FTL is responsible for scientific operations, the VO is responsible for any actions concerning operation of the boat.

Vertical Positioning

The vertical position of below-water stations will be determined using a fathometer or electronic depth sounder. Manufacturers' instructions will be followed for use of these devices. The submerged depth of the sensor (typically a foot or less) will be noted and recorded so depth readings can be corrected as needed.

In areas where the depth is shallow, a lead line or survey rod will be used to measure the distance from the water surface to the bottom. The line should have a 5- to 15-pound weight. Alternatively, the depth could be determined from the core barrel wire wench during sampling if no other options are available.

The time and date of each depth measurements will be recorded on the field sheets. The depth to the station from the water surface will be converted to elevation based on the pool elevation established for the date and time of the depth measurement. Daily water elevations will be obtained from the staff gauge at the site.

Documentation

The field documentation requirements will include recording all observations made during field activities to document the work and potential issues that could affect the quality of field data. The documentation should be entered in a field logbook with consecutively numbered pages and/or the data collection forms. Documentation should include at a minimum:

- Work/sample location
- Date of field activity
- Personnel on-site
- Time of day
- PPE level
- Field methods and procedures
- Field readings and measurements
- Field observations and comments
- Unusual conditions

Attachments

None.

STANDARD OPERATING PROCEDURE 6-3

Ground-Penetrating Radar (GPR)

Purpose and Scope

This Standard Operating Procedure (SOP) provides the Equipment, Materials, Procedures, and Guidelines to locate subsurface utilities or other obstructions (e.g., underground storage tanks [USTs]) using Ground Penetrating Radar (GPR) for clearing prior to drilling. Locations will also be cleared using Underground Service Alert of Southern California (DigAlert, dial "811") and, as needed, other surface geophysical methods. Other geophysical methods will include a high sensitivity metal detector and magnetometer.

GPR is a shallow penetrating geophysical profiling system used where rapid and accurate surveys are desired. GPR can be used for both area and source detection studies. GPR has been used to locate underground pipes, buried drums, foundations, voids in rock and concrete, lithologic contacts, determine stratigraphy, depth to the water table, and depth to bedrock, locate buried archaeological artifacts, excavations, filled pits and lagoons, and numerous other site specific applications.

GPR and any other geophysical methods will be performed by a subcontractor. The procedures in this SOP do not replace more detailed specifications developed or provided by the subcontractor. The subcontractor's procedures will be reviewed for consistency with this SOP before implementation of the work.

References

Field Sampling Plan		
Section	6.1.2	Task 2 – Subsurface Utility Clearance Prior to Field Activities
Figures	A-1	Solid Matrix Sample Locations, Overview
	A-2	Solid Matrix Sample Locations, Smelter Parcel
	A-3	Solid Matrix Sample Locations, Waste Management Area
	A-4	Solid Matrix Sample Locations, Ditch South of WMU
	A-5	Solid Matrix Sample Locations, NCL East
	A-6	Solid Matrix Sample Locations, NCL North
	A-8	Groundwater Monitoring Well Locations
Appendix	B	GPS Coordinates for Sample Locations

Equipment and Materials

A ground penetrating radar system consists of:

- AC/DC power supply
- Control unit (pulse transmitter)
- Antenna(s)
- Graphic recorder

- Digital recorder (optional)
- Magnetic tape recorder (optional)
- Coaxial cable which connects the control unit to the antenna

Typically, radar antennas contain both the transmitter and receiver within one fiberglass unit. Once a radar impulse is transmitted, the antenna switches to the receiver mode and records reflected radar impulses. The pulse receiver contains an amplifier which increase the amplitude of reflected signals. Bistatic antennas (transmitter-receiver are separate) allow the coverage of larger areas with one pass, and multi-receiver combinations allow the "stacking" of radar data which increases the signal to noise ratio.

Field data are generally printed by a graphic recorder and simultaneously can be stored on magnetic tape or diskette. The graphic recorder produces a continuous time (vertical) versus distance (horizontal) profile of the subsurface for field quality control and qualitative interpretations. Radar impulses are synchronized with the swept-stylus type graphic recorder, producing a dark band proportional to the amplitude of reflected radar signal. Because the antenna is moving, each pass of the stylus represents a slightly different antenna position. Gradually, as the recorder paper advances under the moving stylus, a pattern of reflective interfaces emerges.

Radar systems are designed to use antennas of various electrical characteristics. Selection of the antenna is dictated by the requirements of the survey. If high resolution, near-surface data are desired, a small, high frequency antenna is used; if the survey requires deeper probing, a larger, lower frequency antenna is used (80, 120, 250, 300, 400, 500, 900, and 1,000 MHz antennas are commercially available). The drawback of using the lower frequency antennas is that resolution of data is sacrificed for penetration. Also, the low frequency antennas (less than 250 MHz) are generally not shielded, making them susceptible to overhead power line noise and spurious reflections from passing cars. The 900 and 1,000 MHz antennas are used almost exclusively for short penetration projects such as the detection of rebar in concrete, as their penetration is generally limited to 2 to 3 feet.

Procedures and Guidelines

The majority of time involved with any GPR survey is spent establishing survey lines in the area of investigation so that detected anomalies can be easily located and excavated. Survey lines should be set to maximize coverage, while maintaining a grid spacing proportional to the presumed target dimensions. A minimum survey line spacing of 10 feet is desired when looking for a 1,000-gallon fuel tank.

At the onset of any GPR survey the radar control unit should be adjusted for the anticipated depth of penetration. Adjustments of the time window of exploration should be made by estimating the velocity of the medium and desired depth of penetration. Most surveys can be effectively conducted with a minimum time window of 50 nanoseconds.

Accurate determination of the depth to any layer requires calibration of the radar system. The easiest way of calibrating the GPR system to specific settings is by burying a plate at a measured depth, and moving the antenna slowly along the survey line. The plate will produce on the GPR record a thick, dark band, parabolic or flat in shape, with many multiple reflections beneath it. Once a certain confidence level is attained from depth

calibration, the survey is conducted by slowly pulling the antenna along survey lines. A slow walking pace increases the horizontal resolution as radar signals are propagated in a 15- to 45-degree cone from the bottom of the antenna. A slow walking pace is recommended for hazardous waste investigations as targets are better defined and easier to resolve.

Documentation

The field documentation requirements will include recording all observations made during field activities to document the work and potential issues that could affect the quality of field data. The documentation should be entered in a field logbook with consecutively numbered pages and/or the data collection forms. Documentation should include at a minimum:

- Work/sample location
- Date of field activity
- Personnel on-site
- Time of day
- PPE level
- Field methods and procedures
- Field readings and measurements
- Field observations and comments
- Unusual conditions

Attachments

None.

STANDARD OPERATING PROCEDURE 6-4

Visual Inspection for Presence of Slag Waste

Purpose and Scope

This Standard Operating Procedure (SOP) provides the Equipment, Materials, Procedures, and Guidelines to perform a visual inspection of select surface and shallow subsurface areas to assess whether process slag waste is present. These will include the following areas:

- Dirt road along McWane Blvd east of the OID
- Wetland area south and west of the smelter area
- Wetland area south of the WMU

The visual observation will include a systematic slow walk in these areas. A shovel will be used to opportunistically remove near-surface soil and sand to visually inspect to a limited depth below ground surface. Discrete, obvious areas of process slag waste will not be included in the samples, but will be documented.

References

Field Sampling Plan		
Section	6.1.3	Task 1 – Visual Inspection for Presence of Process Slag Waste
Figure	A-10	Transects for Visual Inspection for Presence of Slag Waste

Equipment and Materials

- Differential Global Positioning System (DGPS) with 1 to 3 meter (3.3 to 9.8 feet) accuracy and capable of automatically logging positions during walking. See SOP 6-1, *Location of Field Sampling Stations with GPS*, for description of DGPS.
- Detailed map of each of the 3 inspection areas created from Figure A-10. The purpose of the detailed maps is to guide the field inspections and allow hand annotation to document field observations.
- Tabular log form setup for the transects and stationing along the transects. The purpose of the log form is to systematically document field observations.
- Log book
- Magnetic Compass
- Minimum 100-foot-long tape
- Stakes and hammer
- Shovel

Procedures and Guidelines

General Guidelines

- Perform surveys using a team of 2 field investigators. One investigator will have the primary be responsibility of navigating the transects. The other investigator will have the primary responsibility of the visual observations. However, each of the field investigators will mutually support both activities.
- During the transect inspections for each of the three areas, set the DGPS so that it automatically logs position so that the inspected transects can be subsequently located and documented.
- Review visual and physical nature of slag waste material before beginning surveys by walking the waste pile in the waste management area. The slag waste is present at ground surface, directly underneath the erosion matting on the waste pile.

Guidelines for Dirt road along McWane Blvd east of the OID

- Slowly walk the transect along the centerline of McWane Blvd, either from west-to-east or east-to-west.
- At minimum 10-foot intervals, carefully inspect the dirt road (McWane Blvd), the shoulder immediately to the north of the road (up to 5-feet), and the shoulder to the south of the road (up to 10 feet).
- At each 10-foot station, randomly inspect the subsurface to a depth of less than 6-inches using a shovel. Inspect the dirt road itself and the areas to the north and south of the road.
- At locations with visually identifiable fragments of slag waste, methodically inspect the subsurface to a depth of up to 2-feet using a shovel. Inspect to a depth of less than 6-inches if the slag waste appears to be only sprinkled on ground surface. Inspect to a deeper depth of slag material appears vertically continuous from ground surface downward.

Guidelines for Wetland Areas

- Stake the north end of each of the transect lines at 100-foot intervals using the 100-foot-long tape. The transect lines are separated by a distance of 100-feet.
- Slowly walk the transect lines perpendicular towards the ocean shoreline. Navigate "by sight" using a compass from the staked north starting point. The compass azimuth direction towards the ocean is approximately 220 degrees.
- At minimum 50-foot intervals, carefully inspect the area along the transect, the area immediatley east of the transect (up to 50-feet) and the area immediately west of the transect (up to 50-feet).

- At each 50-foot station, randomly inspect the subsurface to a depth of less than 6-inches using a shovel. Inspect the transect itself and the areas to the east and west of the transect.
- At locations with visually identifiable fragments of slag waste, methodically inspect the subsurface to a depth of up to 2-feet using a shovel. Inspect to a depth of less than 6-inches if the slag waste appears to be only sprinkled on ground surface. Inspect to a deeper depth of slag material appears vertically continuous from ground surface downward.
- Stake the south end of each of the transect lines after finishing the slow walk along each of the transects. The north and south stakes will provide field references to help return to specific areas.

Documentation

Document field inspection observations on a tabular log form and also by annotating the detailed maps of each of the 3 areas created from Figure A-10.

The field documentation requirements will include recording all observations made during field activities to document the work and potential issues that could affect the quality of field data. The documentation should be entered in a field logbook with consecutively numbered pages and/or the data collection forms. Documentation should include at a minimum:

- Work/sample location
- Date of field activity
- Personnel on-site
- Time of day
- PPE level
- Field methods and procedures
- Field readings and measurements
- Field observations and comments
- Unusual conditions

Attachments

None.

STANDARD OPERATING PROCEDURE 6-5

Direct-push Soil Sampling Collection

Purpose and Scope

This Standard Operating Procedure (SOP) provides the Equipment, Materials, Procedures, and Guidelines to obtain subsurface soil, sediment, and waste samples using direct push methods (e.g., Geoprobe). Direct push soil, sediment, and waste samples will be collected from most study areas, including the following:

- Smelter Area
- Waste Management Area
- Nature Conservancy Land
- Oxnard Industrial Drain and Lagoon
- Wetland Area
- Beach Dunes Area

The direct push sampling will be performed by a subcontractor. The procedures in this SOP do not replace more detailed specifications developed or provided by the subcontractor. The subcontractor's procedures will be reviewed for consistency with this SOP before implementation of the work.

References

Field Sampling Plan		
Section	6.1.4	Task 4 – Solid Matrix Sampling
Table	5-3	Request for Analysis, Solid Matrix Samples
Figures	A-1	Solid Matrix Sample Locations, Overview
	A-2	Solid Matrix Sample Locations, Smelter Parcel
	A-3	Solid Matrix Sample Locations, Waste Management Area
	A-4	Solid Matrix Sample Locations, Ditch South of WMU
	A-5	Solid Matrix Sample Locations, NCL East
	A-6	Solid Matrix Sample Locations, NCL North
Appendix	B	GPS Coordinates for Sample Locations

Equipment and Materials

Direct Push refers to tools and sensors that are "pushed" into the ground without the use of drilling to remove soil or to make a path for the tool. A direct push machine relies on a relatively small amount of static (vehicle) weight combined with percussion as the energy for advancement of a tool string.

- Truck-mounted or track-mounted hydraulic percussion hammer
- Sampling rods
- Sampling tubes and acetate liners (if desired)
- Pre-cleaned sample containers and disposable sampling implements

- Clean nitrile gloves
- Sample coolers and ice
- Log book

Procedures and Guidelines

Field Set-up

1. Confirm that underground utilities are not present prior to beginning work.
2. Assemble equipment and check for proper operation
3. Decontaminate equipment

Field Implementation

1. Deploy direct push rig and retrieve sample from target sample depth, using sampling tubes and acetate liners (if desired)
2. After the split spoon is removed from the borehole and opened by the driller, it will be turned over to the field personnel. For Geoprobe sampling, the acetate sleeve will be removed from the drive tube and placed on the core table or on visqueen on the ground surface.
3. The sample description, depth, time, and date will be recorded on the borelog form and in the field logbook.
4. Samples for laboratory analysis collected using the split spoon will be separated and transferred from the split-spoon halves into the sample jars by a disposable plastic scoop. Samples for volatile organic compound analysis will be separated and transferred first, followed by semivolatile samples. For volatile samples, avoid mixing soil before or during transfer. Homogenize the rest of the samples according to the method described in SOP 6-7: *Homogenization of Soil Samples*.
5. Samples for laboratory analysis collected using the Geoprobe rig will be handled by either opening the tube and placing soil in sample jars or cutting the tube and submitting it to the laboratory directly. For samples that will be removed from the acetate tube, the tube will be cut open along its longitudinal axis using a double-razor blade cutter. Soil will be inspected and logged prior to removal of soil samples. A short section of soil will be removed from the acetate sleeve using a disposable scoop or similar device and placed in sample jars. Alternatively, a short (approximately 6-inch) length of tube will be cut from the acetate tube, removed, and capped with Teflon sheeting and plastic end caps at both ends, and taped with clear label or packing tape. Care will be taken to minimize loss of volatiles, including selective use of capped sleeves for such analyses.
6. Once collected, all samples shall be handled in accordance with the project QAPP.
7. Backfill borehole at each sampling location with grout or bentonite and repair the surface with like material (bentonite, asphalt patch, concrete, etc.), as required. Borings will be grouted to the surface and an asphalt patch will be used for locations where

necessary. The basic recipe for the grout is one 97-pound bag of Portland Cement, 7-9 gallons of water, and 3 to 5 pounds of non-beneficiated bentonite powder.

Decontamination

Geoprobe sampling equipment will be decontaminated before initial use and after the development of each piezometer. Decontamination procedures are detailed in SOP 6-24: *Decontamination of Sampling Equipment*.

Investigation Derived Waste Decontamination

Soil and water generated during sampling will be contained and managed as detailed in Section 6.4 of the FSP.

Documentation

The field documentation requirements will include recording all observations made during field activities to document the work and potential issues that could affect the quality of field data. The documentation should be entered in a field logbook with consecutively numbered pages and/or the data collection forms. Documentation should include at a minimum:

- Work/sample location
- Date of field activity
- Personnel on-site
- Time of day
- PPE level
- Field methods and procedures
- Field readings and measurements
- Field observations and comments
- Unusual conditions
- Decontamination procedures
- Investigation derived waste procedures

Attachments

None.

STANDARD OPERATING PROCEDURE 6-6

Surface Soil/Hand-auger Soil and Sediment Sampling

Purpose and Scope

This Standard Operating Procedure (SOP) provides the Equipment, Materials, Procedures, and Guidelines to collect surface and shallow subsurface soil, sediment, and waste samples using surface scoops and hand-augering methods. Surface and shallow subsurface soil, sediment, and waste samples will be collected from most study areas, including the following:

- Smelter Area
- Waste Management Area
- Nature Conservancy Land
- Hueneme Parcel
- Loading Dock Area
- Wetland Area
- Beach Dunes Area

The surface and shallow subsurface sampling may be performed by a subcontractor. The procedures in this SOP do not replace more detailed specifications developed or provided by the subcontractor. The subcontractor's procedures will be reviewed for consistency with this SOP before implementation of the work.

References

Field Sampling Plan		
Section	6.1.4	Task 4 – Solid Matrix Sampling
Table	5-3	Request for Analysis, Solid Matrix Samples
Figures	A-1	Solid Matrix Sample Locations, Overview
	A-2	Solid Matrix Sample Locations, Smelter Parcel
	A-3	Solid Matrix Sample Locations, Waste Management Area
	A-4	Solid Matrix Sample Locations, Ditch South of WMU
	A-5	Solid Matrix Sample Locations, NCL East
	A-6	Solid Matrix Sample Locations, NCL North
Appendix	B	GPS Coordinates for Sample Locations

Equipment and Materials

- Stainless steel or disposable plastic scoops that can be used to remove soil from the ground and shallow subsurface.

- Stainless steel hand auger that can be used to remove soil from the ground and shallow subsurface.
- Pre-cleaned sample containers
- Clean nitrile gloves
- Sample coolers and ice
- Log book

Procedures and Guidelines

- Use a decontaminated stainless-steel scoop/trowel to scrape away surficial organic material (grass, leaves, etc.).
- Obtain the subsurface soil sample using an auger down to the appropriate depth. To facilitate a hand-auger sample collection, measure the length of the auger bucket and place tape at the appropriate intervals on the hand-auger extensions.
- Empty the contents of the scoop/trowel into a decontaminated stainless-steel pan.
- Repeat this procedure until sufficient soil is collected to meet volume requirements. Homogenize the soil sample as described in SOP 6-7: *Homogenization of Soil Samples*.
- Homogenize cuttings in the pan using a disposable scoop as specified in SOP 6-7: *Homogenization of Soil Samples.*
- Transfer sample for analysis into appropriate containers with the disposable scoop used for homogenization.
- Prepare samples for laboratory submission. Sample IDs, types, sampling area, and depth are presented in Section 5 of the FSP.

Decontamination

Non-disposable sampling equipment will be decontaminated before and after use. Decontamination procedures are detailed in SOP 6-24: *Decontamination of Sampling Equipment*.

Investigation Derived Waste Decontamination

Soil and water generated during sampling will be contained and managed as detailed in Section 6.4 of the FSP.

Documentation

The field documentation requirements will include recording all observations made during field activities to document the work and potential issues that could affect the quality of field data. The documentation should be entered in a field logbook with consecutively

numbered pages and/or the data collection forms. Documentation should include at a minimum:

- Work/sample location
- Date of field activity
- Personnel on-site
- Time of day
- PPE level
- Field methods and procedures
- Field readings and measurements
- Field observations and comments
- Unusual conditions
- Decontamination procedures
- Investigation derived waste procedures

Attachments

None.

STANDARD OPERATING PROCEDURE 6-7

Homogenization of Soil Samples

Purpose and Scope

This Standard Operating Procedure (SOP) provides the Equipment, Materials, Procedures, and Guidelines for the homogenization of soil samples. The homogenization of soil is performed to minimize bias of sample representativeness introduced by the natural stratification of constituents within the sample and to collect a representative soil samples for sampling interval. Soil will be composited and homogenized to yield one sample for each depth and each area where direct push sampling techniques are not feasible.

References

Refer to SOP 6-5: *Direct Push Soil Sample Collection* and SOP 6-6: *Surface Soil/Hand Auger Sampling* for instructions on sample collection.

Equipment and Materials

- Sample containers
- Stainless-steel spoons or spatulas
- Stainless-steel pans

Procedures and Guidelines

Soil and sediment samples should be homogenized in the field. After a sample is taken, a dedicated disposable scoop should be used to remove the sample from the auger. The sampler should not use fingers to do this, as gloves may introduce organic interferences into the sample.

Prior to homogenizing the soil samples, any rocks, stems, tree roots, seeds, or other debris should be removed from the sample. The sample should be placed in a decontaminated stainless-steel pan and thoroughly mixed using a dedicated disposable scoop. The soil or sediment material in the pan should be scraped from the sides, corners, and bottom, rolled into the middle of the pan, and initially mixed. Cohesive soil should be chopped to reduce the size of the chunks. The sample should be thoroughly mixed until it appears to be uniform color, texture, and particle size. The sample should then be quartered and moved to the four corners of the pan. Each quarter of the sample should be mixed individually and then rolled to the center of the pan and mixed with the entire sample again. The sample should be collected from the pan by taking small quantities of soil from quadrants around the pan. If more than one container is to be filled, the soil should be remixed and sampled from quadrants around the pan until the next container is filled. Continue until the required volume of soil has been collected.

STANDARD OPERATING PROCEDURE 6-8

Vibracore Soil and Sediment Sampling

Purpose

This Standard Operating Procedure (SOP) provides the Equipment, Materials, Procedures, and Guidelines to collect soil and sediment samples using vibracore methods in submerged areas. Vibracore methods may also be used to collect soil and sediment samples in nearby dry areas. Vibracore samples will be collected from several study areas, including the following:

- Nature Conservancy Land
- Oxnard Industrial Drain
- Lagoon
- Wetland Area
- Beach Dunes

For submerged areas, vibracore sampling will be performed from a small, shallow draft, portable pontoon barge with spuds, Differential Global Positioning System (DGPS) positioning, aluminum tripod and winch for coring over water. The barge will be towed using a small boat or pulled along by wading. The vibracore system we will be a portable hydraulic system connected to the vibrohead once the barge is spudded on the position. The core will be taken through a moonpool of the barge and extracted using the winch and tripod. Processing will generally be done on nearby dry land.

For the land based sampling the same vibracore system will be transported using a small quad vehicle and trailer. The same aluminum tripod and winch would be setup over positions determined by a portable DGPS system.

The vibracore sampling will be performed by a subcontractor. The procedures in this SOP do not replace more detailed specifications developed or provided by the subcontractor. The subcontractor's procedures will be reviewed for consistency with this SOP before implementation of the work.

References

Field Sampling Plan		
Section	6.1.4	Task 4 – Solid Matrix Sampling
Table	5-3	Request for Analysis, Solid Matrix Samples
Figures	A-1	Solid Matrix Sample Locations, Overview
	A-2	Solid Matrix Sample Locations, Smelter Parcel
	A-3	Solid Matrix Sample Locations, Waste Management Area
	A-4	Solid Matrix Sample Locations, Ditch South of WMU
	A-5	Solid Matrix Sample Locations, NCL East
	A-6	Solid Matrix Sample Locations, NCL North
Appendix	B	GPS Coordinates for Sample Locations

Equipment and Materials

- Ensure that the sampling vessel is appropriate for anticipated sampling conditions (mooring, core deployment and recovery system, vessel draft).
- Site topographic maps, nautical charts, and tide tables
- Marine VHF radio (as needed) and cellular telephone
- US Coast Guard (USCG) required vessel safety device, including personal flotation device (PFD)
- Appropriate vessel navigation and position recording equipment, including shore side reference station beacon and tide staff gage installed onsite
- Fathometer and bar gauge or equivalents for recording depth to sediment
- Vibratory core barrel of appropriate sampling length, and polycarbonate core liner material, if required
- Decontaminated core cutter (nose cone) and sample retainer (catcher) assemblies
- Decontaminated core cutting and sample processing equipment
- Decontamination supplies, including wash down pump and hoses
- Steel tape measure
- Pre-cleaned sample containers and stainless-steel sampling implements
- Clean nitrile gloves
- Sample coolers and ice
- Log book

Procedures and Guidelines

Field Set-up

1. Confirm that underground utilities are not present prior to beginning work.
2. Assemble equipment and check for proper operation
3. Decontaminate equipment

Field Work

4. Inspect decontaminated core cutter and core retainer assemblies prior to vessel departure.
5. Conduct tailgate health and safety meeting at the launch site, prior to vessel departure. Review day's planned sampling activities to ensure that all required equipment is onboard the vessel, and that the planned sampling order is appropriate. Program

sample location coordinates into onboard navigation system and confirm that they were determined in the proper coordinate system and datum for the site.

6. Sampling will begin downstream and work upstream to prevent contamination of unsampled areas.
7. Confirm that land based reference beacon (if used) and differential GPS (DGPS) links have been established, and GPS antenna is over sample location, and antenna offsets have been measured to correct for the actual sampling location.
8. Inspect tide staff gage and record water surface level to the nearest 0.1′.
9. Navigate to sampling location and anchor in position, securing the mooring to minimize the effects of current and wind. Follow all vessel crew instructions, remaining clear of equipment and moorage rigging.
10. Once vessel is in position; at the direction of the vessel crew, record sampling station ID, depth to sediment from the vessel decking using a bar gauge and fathometer, depth to water from vessel deck, position coordinates, position relative to fixed reference points, weather, and water surface conditions.
11. Prior to the advancement of the core, ensure that winch cable, push rod, or vibracore barrel have been measured and clearly marked in order to record penetration depth and note changes in drilling advancement or effort.
12. Core assembly is lowered or pushed until penetrative depth or refusal has been encountered. Record depth of penetration, vessel position, time, and apparent sampling conditions. As soon as is practicable following sampling, record water surface level reading from the staff gage.
13. Observe vessel crew instructions, and clear the sampling portal or boom area as core is retrieved, monitor worker breathing space air quality.
14. Once vessel crew has secured the core barrel inspect the barrel cutter head. Provide qualitative description of cutter head catch condition, or soil if retained.
15. Ensure that external sampling equipment is decontaminated using site water and a decontaminated brush, while not disturbing the open end of the core barrel.
16. Label sample end cap for base of sample, remove cutter head assembly, affix end cap, and decontaminate cutter head assembly.
17. Once suspended sediment has had adequate time to settle following sample staging (15-30 minutes), measure total recovery, using a decontaminated tape, calculate and record recovered percentage.
18. Cut or drill a small drain slit above the water-sediment interface, above the depth of recovered sediment and decant supernatant water. Once water has been decanted cut excess sample barrel or liner approximately 1″ above the water-sediment interface, label end cap and affix to barrel. Dry barrel and label with an indelible marker. Sample labeling should include up and down designations with the sample number on the end

caps, and directional arrows on the barrel or liner body. Cut barrel sections to fit staging coolers, transfer labeled samples to coolers immediately post-processing.

Decontamination

Vibracore sampling equipment will be decontaminated before initial use and after the development of each piezometer. Decontamination procedures are detailed in SOP 6-24: *Decontamination of Sampling Equipment*.

Investigation Derived Waste Decontamination

Soil and water generated during sampling will be contained and managed as detailed in Section 6.4 of the FSP.

Documentation

The field documentation requirements will include recording all observations made during field activities to document the work and potential issues that could affect the quality of field data. The documentation should be entered in a field logbook with consecutively numbered pages and/or the data collection forms. Documentation should include at a minimum:

- Work/sample location
- Date of field activity
- Personnel on-site
- Time of day
- PPE level
- Field methods and procedures
- Field readings and measurements
- Field observations and comments
- Unusual conditions
- Decontamination procedures
- Investigation derived waste procedures

Attachments

None.

STANDARD OPERATING PROCEDURE 6-9

Geotechnical Soil and Sediment Sampling

Purpose and Scope

This Standard Operating Procedure (SOP) provides the Equipment, Materials, Procedures, and Guidelines for collecting soil, sediment, and waste samples for geotechnical laboratory analysis. Samples for geotechnical laboratory analysis will be collected form the following locations:

- **Smelter Area.** Subsurface geotechnical samples will be collected at two locations next to the two CPT borings in the Smelter Area. The geotechnical samples will be collected at 5 and 10 feet bgs, and 5 feet into native soils. These samples will be analyzed for grain size gradation, atterberg limits, moisture, density, modified proctor, and direct shear strength.
- **Waste Management Area.** Geotechnical samples will be collected at two locations on top of the WMU, next to the two CPT borings on top of the WMU. The geotechnical samples will be collected from the waste material at 10, 20, and 30 feet bgs and analyzed for grain size gradation, atterberg limits, moisture, density, modified proctor, and direct shear strength.
- **Lagoon.** Geotechnical samples will be collected at the bottom of the main lagoon from four locations. One composite sample will be collected from each location from 0 to 2 feet bgs and analyzed for grain size distribution and atterberg limits.

References

Field Sampling Plan		
Section	6.1.4	Task 4 – Solid Matrix Sampling
Table	5-7	Request for Analysis, Geotechnical Samples
Figures	A-1 A-2 A-3	Solid Matrix Sample Locations, Overview Solid Matrix Sample Locations, Smelter Parcel Solid Matrix Sample Locations, Waste Management Area
Appendixes	B	GPS Coordinates for Sample Locations

Equipment and Materials

Sample Collection – Smelter Area and Waste Management Area

- Drilling rig (hollow stem auger) and associated tools and equipment
- 2.5-inch outside diameter (OD) x 18-inch long California Split Barrel Sampler
- 2-inch diameter x 6-inch long brass sleeves to fit into split barrel sampler

Sample Collection – Lagoon

- Direct push rig and associated tools and equipment

Sample Collection – Combined

- Pre-cleaned sample containers and stainless-steel sampling implements
- Clean nitrile gloves
- Sample coolers and ice
- Log book

Procedures and Guidelines

Field Set-up

1. Confirm that underground utilities are not present prior to beginning work.
2. Assemble equipment and check for proper operation
3. Decontaminate equipment

Sample Collection – Smelter Area and Waste Management Area

Drill borehole using continuous-flight hollow stem augers with the smallest inside diameter that will accommodate obtaining subsurface samples using 2.5-inch OD x 18-inch long split barrel sampler.

Collect subsurface samples using 2.5-inch OD x 18-inch long split barrel sampler fitted with three 6-inch long brass rings.

Drive split barrel sampler using repeated blows from a 140- or 300-pound hammer dropped from a height of 30 inches for standard penetration test (SPT). The standard penetration test (SPT) is an in-situ dynamic penetration test designed to provide information on the geotechnical engineering properties of soil. The test procedure is described in ASTM D1586.

To obtain the SPT data for each sample, record the number of blows needed for the sampler to penetrate each 6-inches of the 18-inch interval. The sum of the number of blows required for the second and third 6 inches of penetration is the "standard penetration resistance" or the "N-value". In cases where 50 blows are insufficient to advance it through a 6-inch interval the penetration after 50 blows is recorded.

Collect the samples in the following containers:

- Grain Size Analysis and Atterberg Limits – 8 oz jar
- Moisture Content and Dry Bulk Density – Whole core in 2-inch x 6-inch sleeve
- Direct Shear – 2-inch x 6-inch sleeve
- Modified Proctor – 5 gallon bucket

Quickly cover the exposed ends of the 6-inch long sample sleeves with Teflon ® sheeting and plastic caps, and secure with tape.

All samples are collected at discrete sample intervals except for the 5-gallon bucket sample for Modified Proctor. For this sample, composite subsurface samples of process slag waste material over the drilled interval to achieve sample volume as long as the material is consistent through the interval to be composited. If necessary, collect sample material from the drill cuttings at ground surface to makeup the 5-gallon sample volume.

Sample Collection – Lagoon

Collect sediment samples using direct push methods used to obtain sediment samples for chemical testing.

Composite the sample from 0 to 2 feet and collected in 8-oz jar for analysis of grain size and Atterberg Limits.

Documentation

The field documentation requirements will include recording all observations made during field activities to document the work and potential issues that could affect the quality of field data. The documentation should be entered in a field logbook with consecutively numbered pages and/or the data collection forms. Documentation should include at a minimum:

- Work/sample location
- Date of field activity
- Personnel onsite
- Time of day
- PPE level
- Field methods and procedures
- Field readings and measurements
- Field observations and comments
- Unusual conditions
- Decontamination procedures
- Investigation derived waste procedures

Attachments

None.

STANDARD OPERATING PROCEDURE 6-10

Soil Logging

Purpose and Scope

This Standard Operating Procedure (SOP) provides guidance to obtain accurate and consistent descriptions of soil characteristics during soil sampling activities. The characterization methods are based on visual examination and manual tests and not on laboratory examinations.

Equipment and Materials

- Field logbook
- Borehole log
- Blue or black waterproof or permanent ink pens
- Tape measure or other device graduated in tenths and hundredths of a foot
- Spatula or putty knife
- Munsell Soil Color chart
- Grain-size chart
- Hand lens
- Unified Soil Classification System (USCS) index chart or table
- 10 percent hydrochloric acid solution or strong acetic acid solution
- Empty clear glass jars or VOA viles
- Protective gloves
- Stainless steel sampling equipment
- Decontamination equipment (Alconox solution in spray bottle, brushes, buckets, rinse water spray bottle)

Procedures and Guidelines

The following covers aspects of soil characterization, including instructions for completing CH2M HILL soil boring log forms, field classification of soil, and standard penetration test procedures for soils.

Instructions for Completing Soil Boring Logs

Soil boring logs will be completed on the soil boring log forms or a handheld electronic logging device during the drilling activities at the time of the logging and soil descriptions. Information collected will be consistent with the standard CH2M HILL form (Attachment A). The information collected in the field to perform the soil characterization is described below.

The field team leader or lead geologist should review the completed forms for accuracy, clarity, and thoroughness of detail. Sample information recorded on the borelog form should be verified for consistency and accuracy with the field logbook, sample labels, and other field data sheets.

Borelog Heading Information

Boring/Well Number: Enter the boring or well number. The new number should be chosen to not conflict with information recorded from previous exploratory work at the site. Number borelog sheets consecutively using subtotal and total page counts, such as Page 1 of 3, Page 2 of 3, and Page 3 of 3.

Location: If stationing, coordinates, mileposts, or similar project layout information is available, indicate the position of the boring to that system using modifiers such as approximate or estimated. A detailed, accurate, and legible drawing should be included in the field logbook describing the boring location relative to local culture, such as distances to building corners, street intersections, or street signs.

Elevation: The elevation will be determined at the conclusion of field activities by a licensed land surveyor.

Drilling Contractor: Enter the name and personnel of the drilling contractor.

Drilling Method and Equipment: Identify the drill rig type (Geoprobe, hollow-stem auger, etc.) and model (CME75, Ingersoll Rand A60), drill bit size and type, drilling fluid, if used, and typical hole diameter based on the outside diameter of the drill bit (9-7/8 inches, 10 ¼ inches).

Water Level and Date: Enter the depth below ground surface to the apparent water level in the borehole, if applicable. The information should be recorded as a comment particularly if the water level is taken from an adjacent monitoring well or soil boring. If free water is not encountered during drilling or cannot be detected because of the drilling method, this information should be noted. Record data and time of day (tides or river stage) of each water level measurement. Time of day will be recorded using 24-hour notation, such as 0910 for 9:10 AM.

Date/Time of Start and Finish: Enter the dates and times the boring was started and completed. Time of day should be added regardless if one or more borings are completed in a day since each borelog represents only one borehole. Time of day will be recorded using 24-hour notation, such as 0910 for 9:10 AM.

Geologist or Logger: Enter the first initial and full last name; middle initials are optional.

Borehole Sampling By Drilling

Continuous Core Drilling Method

If a direct push, such as a Geoprobe, or a sonic drilling method is used, a continuous core can be obtained and logged. Once the core is at surface the core length and depth noted by the driller should be compared to the actual core length recovered and both these values recorded. If recovery is less than 100-percent, the logger should indicate in the comments section of the log the probable cause of the footage loss, if known. See SOP 6-5: *Direct Push Soil Sample Collection*, for more information.

Other Drilling Methods

Borehole lithology from non-continuous coring methods can be determined from cuttings and in-situ grab samples (e.g., split spoon sampling). Split-spoon sampling procedures shall be executed in accordance with American Society for Testing and Materials (ASTM) D1586, Standard Method for Penetration Test and Split-barrel Sampling of Soils (ASTM 1984). California (2-inch) or Modified California (2-1/2 inch) split-barrel samplers may also be used. The split-spoon or split-barrel sampler shall be advanced to the top of the sampling interval using a wire-line or sample rods such as A or AW. The larger-diameter samplers may be fitted with three 6-inch-long stainless-steel sleeves. The sampler shall be driven 18 inches, or to refusal, with a 140-pound hammer dropping repeatedly 30 inches. The number of blows required to drive the sampler each 6 inches shall be recorded on the borelog. Refusal shall be defined as requiring 50 blows with the hammer to advance the sampler less than 6 inches.

Technical Data Included on the Borehole Log

Soil encountered during drilling shall be classified by using ASTM Standard D2488 (ASTM 1993) (Attachment B to this SOP) unless otherwise specified in project sampling plans. Sampling activities shall be performed under the supervision of a competent field geologist or engineer experienced in environmental drilling and sampling. Sampling depths and total depths of holes shall be determined by temporary marking of drill equipment, by reference to standard equipment dimensions (for example, 5-foot hollow-stem auger flights), or by measurement using a fiberglass tape. Observations by the field geologist or engineer shall be recorded directly in the borehole log. The basic reporting requirements for subsurface lithologic logging shall be met by describing the encountered subsurface conditions on the borehole log, while documenting other information in a bound field logbook, as necessary.

The field borehole log is the standard form used to document subsurface geologic conditions. The borehole log is divided into two areas. One portion contains spaces for noting information on the drilling and sampling methods. The second portion contains space for noting lithologic descriptions. All sheets shall be filled out completely, legibly, and in ink. The borehole log will be filled out in the field at the time of the drilling and sampling. The original logs shall be permanent records, and information on the logs may not be erased. If corrections are needed, information shall be crossed out with a single line and the correction shall be initialed and dated.

Items documented on the borehole log include:

- **Depth Below Surface:** Depths recorded on the log shall be measured from ground surface. Use a scale that is appropriate for the sample logging and sample spacing and for the complexity of the subsurface conditions.
- **Sample Interval:** The top and bottom depth of each sample run should be recorded on the borelog. Sampling includes samples collected for analysis as well as core retrieved for logging purposes.
- **Sample Type and Number:** Enter the sample type and number consistent with the sampling and analysis plan at the correct depth intervals. An "x" should be placed across the vertical interval where the environmental soil, grab groundwater, or geotechnical sample was collected.
- **Sample Recovery:** Enter the length of retrieved core to the nearest 0.1 foot of sample recovered, and record the value in feet. Do not count slough or caved material as part of the total recovered length of core. Record total length and percent of sample recovered. If using a 5-foot sample barrel, multiply the total length by two and 100 to get a percentage number. Similarly, if using a 2-½-foot sampler, multiply by 4 and 100 to get the percent recovery.
- **Soil Lithologic Description:** The lithologic classification shall be entered at the depth of each soil change. Additional information such as the presence of roots, fossils, organic material, wood, and fill shall also be entered at the appropriate depth in the format as described in "Field Classification of Soil."
- **Comments During Drilling:** Include pertinent observations in the bore log (where appropriate) and in the field log book. Blow counts (for Standard Penetration Test sampling), heaving sands, caving soil, gas pockets, odors, loss of drilling fluids, penetration rates, damaged sampling tubes, rod chatter, and other salient details shall be noted. The driller should alert sampling personnel to any significant changes in drilling. Such information should be attributed to the driller and recorded in the field log book. These observations may include depth and size and installation time of conductor casing, water-level measurements, sounding of borehole using a weighted tape, depth of rod chatter or difficult drilling, depth and percentage of loss of drilling fluid, depth of hole caving or heaving sand, name and time of arrival and departure of visitors to the site, and health and safety monitoring data.
- **Sampling:** Sampling difficulties shall be noted. Disturbed samples shall be noted on the log as well as the sample recovery. The top of the sample shall be marked on the container.
- **Water Levels:** Water-level measurements, where groundwater is encountered, are required for each boring. Changes in soil moisture shall be noted and, if there is no water encountered, a note to that effect shall be included on the borehole log. The date and time of water-level measurements shall be documented.
- **Backfilling:** When a boring is completed and the water level measured, the boring shall be backfilled to ground surface according to applicable regulations. The destruction of the hole shall be noted on the log.

Soil Classification

This section presents the format for the field classification of soil. Soil descriptions should be precise, comprehensive, and succinct. The correct overall description of the soil should not be distorted by emphasis on minor details. Similarities rather than differences between consecutive samples should be identified. Soil descriptions must be recorded for every sample collected. The format and order for soil descriptions should be as follows:

Soil Name with Appropriate Modifiers: Soil name should be in all capitals and underlined in the log, for example "POORLY-GRADED SAND." (See ASTM D2488 for details.)

Group Symbol in Parenthesis: For example "(SP)." (See ASTM D2488 for details.)

Munsell Color Chart Designation: This should be used for all descriptions. (See the Munsell Soil Color Chart book for details.)

Moisture Content: Moisture content is described only in three categories: dry, moist, or wet. (See ASTM D2488 for details.)

Relative Density or Consistency: This can relate to wet or dry strength, although it is generally used to describe samples with *in situ* moisture content. (See ASTM D2488 for details.)

Soil Qualities: Descriptions for modifying the soil name such as structure (blocky, fissle), mineralogy (micaceous, fossiliferous, quartz sand), or other descriptors. (See ASTM D2488 for details.)

Depending on the drilling method, soil descriptions are based on the drill cuttings, on soil samples collected by one of numerous methods, or on a combination of the two. ASTM D2488 shall be used in classifying soil by visual and manual examination. A copy of the procedure is attached. Although the remainder of this procedure summarizes the requirements of the ASTM procedure, all technical personnel who are responsible for soil logging and classification shall review and become familiar with the ASTM specification.

Color, consistency, or natural density, moisture, and structure shall be described in field logs. Typical soil descriptions are listed below, followed by a discussion of each part of the description.

Each stratum of soil shall be identified by the following items in the order given: soil type with textural and compositional modifiers, classification symbol, particle size, color and Munsell soil color chart number in parentheses, grading, plasticity, moisture content, consistency or relative density (for noncohesive and cohesive soils), structure and/or cementation, stratification, mineralogy, and stratigraphic contacts.

For example, a moist, sandy clay with 30 percent fine sand and minor quantities of pebble-sized gravel would read:

SANDY CLAY (CL) with some fine sand and trace pebble-sized gravel, yellowish brown (10 YR 5/4), poorly sorted, slightly plastic, moist, firm, laminated to lensed with fine sand, fissured and blocky fracture, fine sand 95 percent quartz, 5 percent feldspathic, subangular, clay mottled with rootlets, sharp contact with above silt, gradational with below.

Other examples and guidelines are as follows:

- CLAYEY SAND (SC) with little clay and few pebble-sized gravel, grayish brown (10 YR 5/2), poorly sorted, plastic, wet, moderately dense, stratified to cross-bedded, blocky fracture, 75 percent quartz sand, 10 percent biotite, 15 percent felsic and lithic fragments, angular to rounded.
- The modifiers of "well-graded" and "poorly-graded" for sands and gravels, "lean" (low plasticity) and "fat" (high plasticity) for clays, and "plastic" for silts should be given where appropriate. Estimates should be made of the approximate percentage of a secondary constituent, such as "approximately 20-percent fine sand." Borderline classifications (e.g., SP/SC) shall be used for soil with properties of both materials.
- The ASTM system uses a hyphen for borderline soil with 10-percent fines (e.g., SP-SC). Fifteen-percent fines shall be used as the dividing line between clean sand and gravel (e.g., SW, GP) and silty or clayey sand and gravel (e.g., SC, GM).
- For interbedded soil where two or more soil types are interbedded in approximately equal percentages, both soil types should be described along with interbed thickness. The particle distributions should be referred to as upward fining or upward coarsening for soils that exhibit gradational trends.

Color. Soil color is described by comparing the sample with the Munsell Soil Color Charts. The Munsell colors should be used unless directed otherwise by project sampling plans. Instructions for their proper use are in the color charts. The color name shall precede the Munsell color notation (e.g., "yellowish brown, 10 YR 5/4"), with color hue and chroma number parenthetically entered in the borelog description. If no color chip is available, the color should be simply described as primary color (i.e., green, brown, gray, yellow, tan, etc).

Consistency. An estimate of the consistency shall accompany descriptions of all fine-grained soil (silt and clay where more than 50 percent of the material would pass the No. 200 sieve). A pocket penetrometer is the most accurate method for estimating the consistency of fine-grained soils. Table 1 lists characteristics for soil consistency identification.

TABLE 1
Estimation of Soil Consistency

Consistency	Unconfined Compressive Strength (tons/ft)[a]	Blows/foot (SPT) [b]	Manual Procedure
Very soft	<0.25	0 – 4	Thumb will penetrate soil more than 1 inch (25 mm).
Soft	0.25 - 0.50	4 – 8	Thumb will penetrate soil about 1 inch (25 mm).
Firm (formerly stiff)	-1.50	8 – 15	Thumb will indent soil about 1/4 inch (6 mm).
Hard	-2.00	15 – 30	Thumb will not indent soil but readily indented with thumbnail.
Very hard	>4.0	> 30	Thumbnail will not indent soil.

Notes:

[a] Pocket penetrometer

[b] Blows/foot is defined as the total number of blows required to drive the second and third 6 inches of penetration (blow counts for the first 6 inches are also noted) while driving an 18-inch SPT sampler with a 140-pound hammer falling a free height of 30 inches. Conversion factors may be applied when the field log information is transferred to the final log when using a sampler other than an SPT (Standard penetrometer) (e.g., S&H or Modified California), or when using different hammer weights and drop. The conversion factor is approximately 0.5 for an S&H sampler with a hammer weight of 140 pounds falling 30 inches.

Density. Descriptions of all coarse-grained soil (sand and gravel where less than 50 percent of the material would pass the No. 200 sieve and 100 percent would pass the 3-inch sieve) shall be accompanied by an estimate of the density based upon standard penetrometer (SPT) blow counts. The following terminology should be used:

Density	Blows/foot (SPT)
Very loose	< 4
Loose	4-10
Medium dense	10-30
Dense	30-50
Very dense	> 50

Moisture. Soil moisture content shall be estimated using only the terminology described below:

- Dry – Absence of moisture, dusty, dry to the touch
- Moist – Damp but no visible water
- Wet – Visibly free water, usually sampled from below the water table

Other Descriptions. The soil description may contain other descriptions as needed to best convey distinctive or important features of the soil. These may include grain size and percentage, structure, particle shape and angularity, cementation, odor, reaction with hydrochloric acid (HCl), physical properties of fine-grained soil (dry strength, dilatency, toughness, plasticity), mineralogic or geologic interpretation or local name, or other distinctive features. Criteria for the use of these other descriptions include:

- Grain Size and Percentages. Within the gravel sizes and the sand sizes, there are further divisions based on particle sizes. Gravel is divided into fine and coarse gravel. Fine gravel particles (pebbles) are those that would pass through 3/4-inch opening but not a 1/4-inch opening. The fine gravel ranges from pea to marble sized. Coarse gravel particles are those that would pass through a 3-inch opening but not a 3/4-in opening. Common objects of this size are grapes and tennis balls. Cobbles range from 3 inches to 12 inches in size; boulders are larger than 12 inches.

  Sand is divided into three sizes: fine, medium, and coarse. Sand passes a No. 4 sieve (approximately 1/4 inch) and is retained in a No. 200 sieve (0.003 inch). Fine sand particles pass a No. 40 sieve (approximately 1/64 inch) and are retained in the No. 200 (0.003 inch) sieve. These particles are sugar or table salt sized. Medium sand passes the No. 10 sieve (approximately 1/2 inch) and retained on the No. 40 sieve. These particles are about the same size as the openings in window screening. Coarse sand particles would pass a No. 4 sieve (approximately 1/4 inch) and be retained on a No. 10 sieve. Rock salt granules fall in this size range. Sand and gravel particle sizes are illustrated in ASTM D2488 along with percentage estimating charts. The percentages of different grain size fractions are important in the soil type determination.

- Structure:
  - Stratified – Alternating layers of varying material or color with layers at least 1/4-inch thick; note thickness.
  - Laminated – Alternating layers of varying material or color with the layers less than 1/4-inch thick; note thickness.
  - Fissured – Breaks along definite planes of fracture with little resistance.
  - Slickensides – Fracture planes appear polished or glossy, often striated.
  - Blocky – Cohesive soil that can be broken down into small angular lumps that resist further breakdown.
  - Lensed – Inclusion of small pockets of different soils, such as lenses of sand within clay; note thickness.
  - Homogeneous – Same color and appearance throughout.
  - Grading – Whether the particles increase or decrease in size toward the top of logged interval.
- Particle Shape :
  - Flat – Particles with width/thickness ratio > 3.
  - Elongated – Particles with length/width ratio > 3.
  - Elongated and flat – Particles meet criteria for both flat and elongated.
- Particle Angularity:
  - Angular – Particles have sharp edges and relatively planar sides with unpolished surfaces.
  - Subangular – Particles are similar to angular description but have rounded edges.
  - Subrounded – Particles have nearly planar sides but have well-rounded corners and edges.
  - Rounded – Particles have smoothly-curved sides and no edges.
- Cementation:
  - Weak – rumbles or breaks with handling or little finger pressure.
  - Moderate – Crumbles or breaks with considerable finger pressure.
  - Strong – Will not crumble or break with finger pressure.
- Reaction with HCl:
  - None – No visible reaction.
  - Weak – Some reaction, bubbles forming slowly.
  - Strong – Vigorous reaction, bubbles forming immediately.

Key Checks and Preventive Maintenance

- Check entries to the soil boring log and field logbook in the field during sampling activities because the samples will be disposed at the end of the fieldwork, confirmation and corrections cannot be made later.
- Check that the sample numbers and intervals are properly specified.
- Ensure that drilling equipment is decontaminated prior to the beginning of work and between each borehole.
- All materials generated during sampling (debris, PPE, decontamination liquids, etc.) will be handled as specified in the task FSP.

References

American Society for Testing and Materials (ASTM). 1984. "Standard Method for Penetration Test and Split-Barrel Sampling of Soils, D1586-84."

American Society for Testing and Materials (ASTM). 1993. "Standard Method for Description and Identification of Soils (Visual-Manual Method) D2488-93."

Munsell Soil Color Charts. 1992. Macbeth Division of Kollmorgen Instrument Corporation, Newburgh, N.Y.

Attachment A
Examples of Soil Boring Logs

CH2MHILL

PROJECT NUMBER	BORING NUMBER SHEET OF

SOIL BORING LOG

PROJECT _____ LOCATION _____

ELEVATION _____ DRILLING CONTRACTOR _____

DRILLING METHOD AND EQUIPMENT _____

WATER LEVELS _____ START _____ FINISH _____ LOGGER _____

DEPTH BELOW SURFACE (FT)	SAMPLE			STANDARD PENETRATION TEST RESULTS	SOIL DESCRIPTION	COMMENTS
	INTERVAL	NUMBER AND TYPE	RECOVERY (FT)	6"-6"-6" (N)	SOIL NAME, USCS GROUP SYMBOL, COLOR, MOISTURE CONTENT, RELATIVE DENSITY OR CONSISTENCY, SOIL STRUCTURE, MINERALOGY	DEPTH OF CASING, DRILLING RATE, DRILLING FLUID LOSS, TESTS AND INSTRUMENTATION

REV 9/96 FORM D1586

Attachment B
ASTM D-24

Designation: D 2488 – 93

AMERICAN SOCIETY FOR TESTING AND MATERIALS
100 Barr Harbor Dr., West Conshohocken, PA 19428
Reprinted from the Annual Book of ASTM Standards. Copyright ASTM
If not listed in the current combined index, will appear in the next edition.

Standard Practice for Description and Identification of Soils (Visual-Manual Procedure)[1]

This standard is issued under the fixed designation D 2488; the number immediately following the designation indicates the year of original adoption or, in the case of revision, the year of last revision. A number in parentheses indicates the year of last reapproval. A superscript epsilon (ε) indicates an editorial change since the last revision or reapproval.

This standard has been approved for use by agencies of the Department of Defense. Consult the DoD Index of Specifications and Standards for the specific year of issue which has been adopted by the Department of Defense.

1. Scope

1.1 This practice covers procedures for the description of soils for engineering purposes.

1.2 This practice also describes a procedure for identifying soils, at the option of the user, based on the classification system described in Test Method D 2487. The identification is based on visual examination and manual tests. It must be clearly stated in reporting an identification that it is based on visual-manual procedures.

1.2.1 When precise classification of soils for engineering purposes is required, the procedures prescribed in Test Method D 2487 shall be used.

1.2.2 In this practice, the identification portion assigning a group symbol and name is limited to soil particles smaller than 3 in. (75 mm).

1.2.3 The identification portion of this practice is limited to naturally occurring soils (disturbed and undisturbed).

NOTE 1—This practice may be used as a descriptive system applied to such materials as shale, claystone, shells, crushed rock, etc. (See Appendix X2).

1.3 The descriptive information in this practice may be used with other soil classification systems or for materials other than naturally occurring soils.

1.4 *This standard does not purport to address all of the safety problems, if any, associated with its use. It is the responsibility of the user of this standard to establish appropriate safety and health practices and determine the applicability of regulatory limitations prior to use.* For specific precautionary statements see Section 8.

1.5 The values stated in inch-pound units are to be regarded as the standard.

2. Referenced Documents

2.1 *ASTM Standards:*

D 653 Terminology Relating to Soil, Rock, and Contained Fluids[2]

D 1452 Practice for Soil Investigation and Sampling by Auger Borings[2]

D 1586 Method for Penetration Test and Split-Barrel Sampling of Soils[2]

D 1587 Practice for Thin-Walled Tube Sampling of Soils[2]

D 2113 Practice for Diamond Core Drilling for Site Investigation[2]

D 2487 Classification of Soils for Engineering Purposes (Unified Soil Classification System)[2]

D 4083 Practice for Description of Frozen Soils (Visual-Manual Procedure)[2]

3. Terminology

3.1 *Definitions:*

3.1.1 Except as listed below, all definitions are in accordance with Terminology D 653.

NOTE 2—For particles retained on a 3-in. (75-mm) US standard sieve, the following definitions are suggested:

Cobbles—particles of rock that will pass a 12-in. (300-mm) square opening and be retained on a 3-in. (75-mm) sieve, and

Boulders—particles of rock that will not pass a 12-in. (300-mm) square opening.

3.1.1.2 *clay*—soil passing a No. 200 (75-μm) sieve that can be made to exhibit plasticity (putty-like properties) within a range of water contents, and that exhibits considerable strength when air-dry. For classification, a clay is a fine-grained soil, or the fine-grained portion of a soil, with a plasticity index equal to or greater than 4, and the plot of plasticity index versus liquid limit falls on or above the "A" line (see Fig. 3 of Test Method D 2487).

3.1.1.3 *gravel*—particles of rock that will pass a 3-in. (75-mm) sieve and be retained on a No. 4 (4.75-mm) sieve with the following subdivisions:

coarse—passes a 3-in. (75-mm) sieve and is retained on a ¾-in. (19-mm) sieve.

fine—passes a ¾-in. (19-mm) sieve and is retained on a No. 4 (4.75-mm) sieve.

3.1.1.4 *organic clay*—a clay with sufficient organic content to influence the soil properties. For classification, an organic clay is a soil that would be classified as a clay, except that its liquid limit value after oven drying is less than 75 % of its liquid limit value before oven drying.

3.1.1.5 *organic silt*—a silt with sufficient organic content to influence the soil properties. For classification, an organic silt is a soil that would be classified as a silt except that its liquid limit value after oven drying is less than 75 % of its liquid limit value before oven drying.

3.1.1.6 *peat*—a soil composed primarily of vegetable tissue in various stages of decomposition usually with an organic odor, a dark brown to black color, a spongy consistency, and a texture ranging from fibrous to amorphous.

3.1.1.7 *sand*—particles of rock that will pass a No. 4

[1] This practice is under the jurisdiction of ASTM Committee D-18 on Soil and Rock and is the direct responsibility of Subcommittee D18.07 on Identification and Classification of Soils.

Current edition approved Sept. 15, 1993. Published November 1993. Originally published as D 2488 – 66 T. Last previous edition D 2488 – 90.

[2] *Annual Book of ASTM Standards*, Vol 04.08.

WB012009003SCO

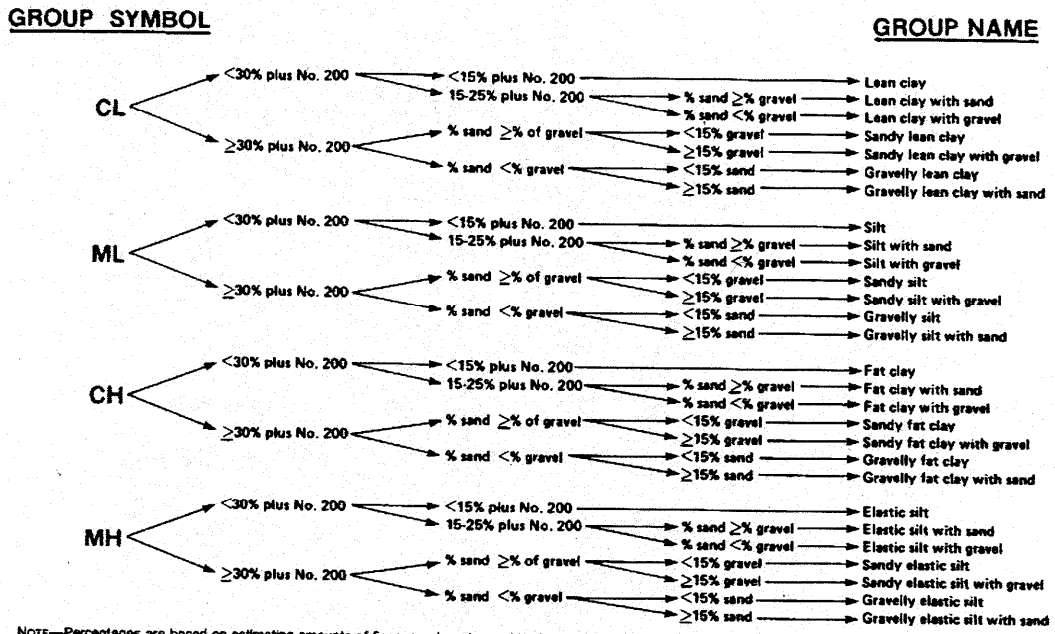

NOTE—Percentages are based on estimating amounts of fines, sand, and gravel to the nearest 5 %.

FIG. 1a Flow Chart for Identifying Inorganic Fine-Grained Soil (50 % or more fines)

(4.75-mm) sieve and be retained on a No. 200 (75-μm) sieve with the following subdivisions:

coarse—passes a No. 4 (4.75-mm) sieve and is retained on a No. 10 (2.00-mm) sieve.

medium—passes a No. 10 (2.00-mm) sieve and is retained on a No. 40 (425-μm) sieve.

fine—passes a No. 40 (425-μm) sieve and is retained on a No. 200 (75-μm) sieve.

3.1.1.8 *silt*—soil passing a No. 200 (75-μm) sieve that is nonplastic or very slightly plastic and that exhibits little or no strength when air dry. For classification, a silt is a fine-grained soil, or the fine-grained portion of a soil, with a plasticity index less than 4, or the plot of plasticity index versus liquid limit falls below the "A" line (see Fig. 3 of Test Method D 2487).

4. Summary of Practice

4.1 Using visual examination and simple manual tests, this practice gives standardized criteria and procedures for describing and identifying soils.

4.2 The soil can be given an identification by assigning a group symbol(s) and name. The flow charts, Figs. 1a and 1b for fine-grained soils, and Fig. 2, for coarse-grained soils, can be used to assign the appropriate group symbol(s) and name. If the soil has properties which do not distinctly place it into a specific group, borderline symbols may be used, see Appendix X3.

NOTE 3—It is suggested that a distinction be made between *dual symbols* and *borderline symbols*.

Dual Symbol—A dual symbol is two symbols separated by a hyphen, for example, GP-GM, SW-SC, CL-ML used to indicate that the soil has been identified as having the properties of a classification in accordance with Test Method D 2487 where two symbols are required. Two symbols are required when the soil has between 5 and 12 % fines or

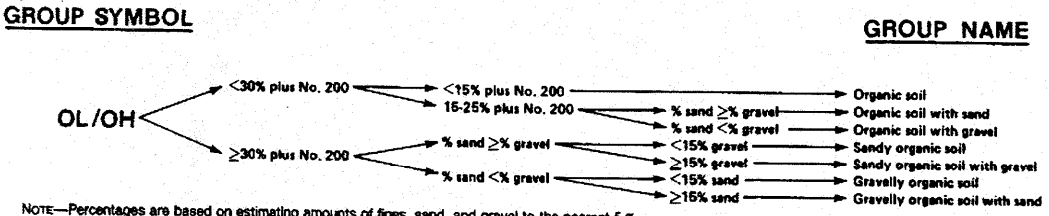

NOTE—Percentages are based on estimating amounts of fines, sand, and gravel to the nearest 5 %.

FIG. 1b Flow Chart for Identifying Organic Fine-Grained Soil (50 % or more fines)

WB012009003SCO

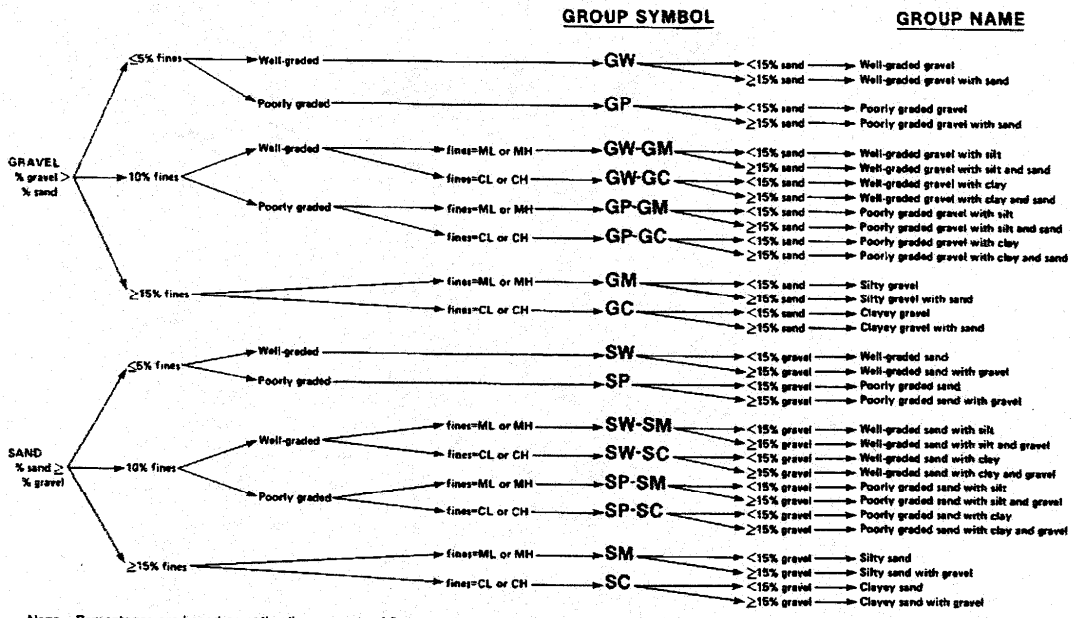

NOTE—Percentages are based on estimating amounts of fines, sand, and gravel to the nearest 5 %.

FIG. 2 Flow Chart for Identifying Coarse-Grained Soils (less than 50 % fines)

when the liquid limit and plasticity index values plot in the CL-ML area of the plasticity chart.

Borderline Symbol—A borderline symbol is two symbols separated by a slash, for example, CL/CH, GM/SM, CL/ML. A borderline symbol should be used to indicate that the soil has been identified as having properties that do not distinctly place the soil into a specific group (see Appendix X3).

5. Significance and Use

5.1 The descriptive information required in this practice can be used to describe a soil to aid in the evaluation of its significant properties for engineering use.

5.2 The descriptive information required in this practice should be used to supplement the classification of a soil as determined by Test Method D 2487.

5.3 This practice may be used in identifying soils using the classification group symbols and names as prescribed in Test Method D 2487. Since the names and symbols used in this practice to identify the soils are the same as those used in Test Method D 2487, it shall be clearly stated in reports and all other appropriate documents, that the classification symbol and name are based on visual-manual procedures.

5.4 This practice is to be used not only for identification of soils in the field, but also in the office, laboratory, or wherever soil samples are inspected and described.

5.5 This practice has particular value in grouping similar soil samples so that only a minimum number of laboratory tests need be run for positive soil classification.

NOTE 4—The ability to describe and identify soils correctly is learned more readily under the guidance of experienced personnel, but it may also be acquired systematically by comparing numerical laboratory test results for typical soils of each type with their visual and manual characteristics.

5.6 When describing and identifying soil samples from a given boring, test pit, or group of borings or pits, it is not necessary to follow all of the procedures in this practice for every sample. Soils which appear to be similar can be grouped together; one sample completely described and identified with the others referred to as similar based on performing only a few of the descriptive and identification procedures described in this practice.

5.7 This practice may be used in combination with Practice D 4083 when working with frozen soils.

6. Apparatus

6.1 *Required Apparatus:*

6.1.1 *Pocket Knife or Small Spatula.*

6.2 *Useful Auxiliary Apparatus:*

6.2.1 *Small Test Tube and Stopper* (or jar with a lid).

6.2.2 *Small Hand Lens.*

7. Reagents

7.1 *Purity of Water*—Unless otherwise indicated, references to water shall be understood to mean water from a city water supply or natural source, including non-potable water.

7.2 *Hydrochloric Acid*—A small bottle of dilute hydrochloric acid, HCl, one part HCl (10 *N*) to three parts water (This reagent is optional for use with this practice). See Section 8.

WB012009003SCO

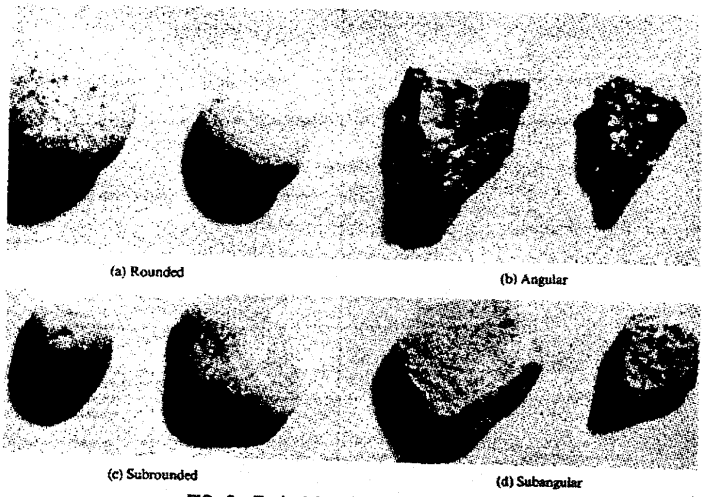

FIG. 3 Typical Angularity of Bulky Grains

8. Safety Precautions

8.1 When preparing the dilute HCl solution of one part concentrated hydrochloric acid (10 *N*) to three parts of distilled water, slowly add acid into water following necessary safety precautions. Handle with caution and store safely. If solution comes into contact with the skin, rinse thoroughly with water.

8.2 **Caution**—Do not add water to acid.

9. Sampling

9.1 The sample shall be considered to be representative of the stratum from which it was obtained by an appropriate, accepted, or standard procedure.

NOTE 5—Preferably, the sampling procedure should be identified as having been conducted in accordance with Practices D 1452, D 1587, or D 2113, or Method D 1586.

9.2 The sample shall be carefully identified as to origin.

NOTE 6—Remarks as to the origin may take the form of a boring number and sample number in conjunction with a job number, a geologic stratum, a pedologic horizon or a location description with respect to a permanent monument, a grid system or a station number and offset with respect to a stated centerline and a depth or elevation.

9.3 For accurate description and identification, the minimum amount of the specimen to be examined shall be in accordance with the following schedule:

Maximum Particle Size, Sieve Opening	Minimum Specimen Size, Dry Weight
4.75 mm (No. 4)	100 g (0.25 lb)
9.5 mm (3/8 in.)	200 g (0.5 lb)
19.0 mm (3/4 in.)	1.0 kg (2.2 lb)
38.1 mm (1 1/2 in.)	8.0 kg (18 lb)
75.0 mm (3 in.)	60.0 kg (132 lb)

NOTE 7—If random isolated particles are encountered that are significantly larger than the particles in the soil matrix, the soil matrix can be accurately described and identified in accordance with the preceeding schedule.

9.4 If the field sample or specimen being examined is smaller than the minimum recommended amount, the report shall include an appropriate remark.

10. Descriptive Information for Soils

10.1 *Angularity*—Describe the angularity of the sand (coarse sizes only), gravel, cobbles, and boulders, as angular, subangular, subrounded, or rounded in accordance with the criteria in Table 1 and Fig. 3. A range of angularity may be stated, such as: subrounded to rounded.

10.2 *Shape*—Describe the shape of the gravel, cobbles, and boulders as flat, elongated, or flat and elongated if they meet the criteria in Table 2 and Fig. 4. Otherwise, do not mention the shape. Indicate the fraction of the particles that have the shape, such as: one-third of the gravel particles are flat.

10.3 *Color*—Describe the color. Color is an important property in identifying organic soils, and within a given

TABLE 1 Criteria for Describing Angularity of Coarse-Grained Particles (see Fig. 3)

Description	Criteria
Angular	Particles have sharp edges and relatively plane sides with unpolished surfaces
Subangular	Particles are similar to angular description but have rounded edges
Subrounded	Particles have nearly plane sides but have well-rounded corners and edges
Rounded	Particles have smoothly curved sides and no edges

TABLE 2 Criteria for Describing Particle Shape (see Fig. 4)

The particle shape shall be described as follows where length, width, and thickness refer to the greatest, intermediate, and least dimensions of a particle, respectively.

Flat	Particles with width/thickness > 3
Elongated	Particles with length/width > 3
Flat and elongated	Particles meet criteria for both flat and elongated

WB012009003SCO

TABLE 7 Criteria for Describing Structure

Description	Criteria
Stratified	Alternating layers of varying material or color with layers at least 6 mm thick; note thickness
Laminated	Alternating layers of varying material or color with the layers less than 6 mm thick; note thickness
Fissured	Breaks along definite planes of fracture with little resistance to fracturing
Slickensided	Fracture planes appear polished or glossy, sometimes striated
Blocky	Cohesive soil that can be broken down into small angular lumps which resist further breakdown
Lensed	Inclusion of small pockets of different soils, such as small lenses of sand scattered through a mass of clay; note thickness
Homogeneous	Same color and appearance throughout

tation of the soil, or both, may be added if identified as such.

10.15 A classification or identification of the soil in accordance with other classification systems may be added if identified as such.

11. Identification of Peat

11.1 A sample composed primarily of vegetable tissue in various stages of decomposition that has a fibrous to amorphous texture, usually a dark brown to black color, and an organic odor, shall be designated as a highly organic soil and shall be identified as peat, PT, and not subjected to the identification procedures described hereafter.

12. Preparation for Identification

12.1 The soil identification portion of this practice is based on the portion of the soil sample that will pass a 3-in. (75-mm) sieve. The larger than 3-in. (75-mm) particles must be removed, manually, for a loose sample, or mentally, for an intact sample before classifying the soil.

12.2 Estimate and note the percentage of cobbles and the percentage of boulders. Performed visually, these estimates will be on the basis of volume percentage.

NOTE 8—Since the percentages of the particle-size distribution in Test Method D 2487 are by dry weight, and the estimates of percentages for gravel, sand, and fines in this practice are by dry weight, it is recommended that the report state that the percentages of cobbles and boulders are by volume.

12.3 Of the fraction of the soil smaller than 3 in. (75 mm), estimate and note the percentage, by dry weight, of the gravel, sand, and fines (see Appendix X4 for suggested procedures).

NOTE 9—Since the particle-size components appear visually on the basis of volume, considerable experience is required to estimate the percentages on the basis of dry weight. Frequent comparisons with laboratory particle-size analyses should be made.

12.3.1 The percentages shall be estimated to the closest 5 %. The percentages of gravel, sand, and fines must add up to 100 %.

12.3.2 If one of the components is present but not in sufficient quantity to be considered 5 % of the smaller than 3-in. (75-mm) portion, indicate its presence by the term *trace*, for example, trace of fines. A trace is not to be considered in the total of 100 % for the components.

13. Preliminary Identification

13.1 The soil is *fine grained* if it contains 50 % or more fines. Follow the procedures for identifying fine-grained soils of Section 14.

13.2 The soil is *coarse grained* if it contains less than 50 % fines. Follow the procedures for identifying coarse-grained soils of Section 15.

14. Procedure for Identifying Fine-Grained Soils

14.1 Select a representative sample of the material for examination. Remove particles larger than the No. 40 sieve (medium sand and larger) until a specimen equivalent to about a handful of material is available. Use this specimen for performing the dry strength, dilatancy, and toughness tests.

14.2 *Dry Strength:*

14.2.1 From the specimen, select enough material to mold into a ball about 1 in. (25 mm) in diameter. Mold the material until it has the consistency of putty, adding water if necessary.

14.2.2 From the molded material, make at least three test specimens. A test specimen shall be a ball of material about ½ in. (12 mm) in diameter. Allow the test specimens to dry in air, or sun, or by artificial means, as long as the temperature does not exceed 60°C.

14.2.3 If the test specimen contains natural dry lumps, those that are about ½ in. (12 mm) in diameter may be used in place of the molded balls.

NOTE 10—The process of molding and drying usually produces higher strengths than are found in natural dry lumps of soil.

14.2.4 Test the strength of the dry balls or lumps by crushing between the fingers. Note the strength as none, low, medium, high, or very high in accorance with the criteria in Table 8. If natural dry lumps are used, do not use the results of any of the lumps that are found to contain particles of coarse sand.

14.2.5 The presence of high-strength water-soluble cementing materials, such as calcium carbonate, may cause exceptionally high dry strengths. The presence of calcium carbonate can usually be detected from the intensity of the reaction with dilute hydrochloric acid (see 10.6).

14.3 *Dilatancy:*

14.3.1 From the specimen, select enough material to mold into a ball about ½ in. (12 mm) in diameter. Mold the material, adding water if necessary, until it has a soft, but not sticky, consistency.

14.3.2 Smooth the soil ball in the palm of one hand with the blade of a knife or small spatula. Shake horizontally, striking the side of the hand vigorously against the other hand several times. Note the reaction of water appearing on

TABLE 8 Criteria for Describing Dry Strength

Description	Criteria
None	The dry specimen crumbles into powder with mere pressure of handling
Low	The dry specimen crumbles into powder with some finger pressure
Medium	The dry specimen breaks into pieces or crumbles with considerable finger pressure
High	The dry specimen cannot be broken with finger pressure. Specimen will break into pieces between thumb and a hard surface
Very high	The dry specimen cannot be broken between the thumb and a hard surface

WB012009003SCO

TABLE 9 Criteria for Describing Dilatancy

Description	Criteria
None	No visible change in the specimen
Slow	Water appears slowly on the surface of the specimen during shaking and does not disappear or disappears slowly upon squeezing
Rapid	Water appears quickly on the surface of the specimen during shaking and disappears quickly upon squeezing

TABLE 10 Criteria for Describing Toughness

Description	Criteria
Low	Only slight pressure is required to roll the thread near the plastic limit. The thread and the lump are weak and soft
Medium	Medium pressure is required to roll the thread to near the plastic limit. The thread and the lump have medium stiffness
High	Considerable pressure is required to roll the thread to near the plastic limit. The thread and the lump have very high stiffness

the surface of the soil. Squeeze the sample by closing the hand or pinching the soil between the fingers, and note the reaction as none, slow, or rapid in accordance with the criteria in Table 9. The reaction is the speed with which water appears while shaking, and disappears while squeezing.

14.4 *Toughness:*

14.4.1 Following the completion of the dilatancy test, the test specimen is shaped into an elongated pat and rolled by hand on a smooth surface or between the palms into a thread about ⅛ in. (3 mm) in diameter. (If the sample is too wet to roll easily, it should be spread into a thin layer and allowed to lose some water by evaporation.) Fold the sample threads and reroll repeatedly until the thread crumbles at a diameter of about ⅛ in. The thread will crumble at a diameter of ⅛ in. when the soil is near the plastic limit. Note the pressure required to roll the thread near the plastic limit. Also, note the strength of the thread. After the thread crumbles, the pieces should be lumped together and kneaded until the lump crumbles. Note the toughness of the material during kneading.

14.4.2 Describe the toughness of the thread and lump as low, medium, or high in accordance with the criteria in Table 10.

14.5 *Plasticity*—On the basis of observations made during the toughness test, describe the plasticity of the material in accordance with the criteria given in Table 11.

14.6 Decide whether the soil is an *inorganic* or an *organic* fine-grained soil (see 14.8). If inorganic, follow the steps given in 14.7.

14.7 *Identification of Inorganic Fine-Grained Soils:*

TABLE 11 Criteria for Describing Plasticity

Description	Criteria
Nonplastic	A ⅛-in. (3-mm) thread cannot be rolled at any water content
Low	The thread can barely be rolled and the lump cannot be formed when drier than the plastic limit
Medium	The thread is easy to roll and not much time is required to reach the plastic limit. The thread cannot be rerolled after reaching the plastic limit. The lump crumbles when drier than the plastic limit
High	It takes considerable time rolling and kneading to reach the plastic limit. The thread can be rerolled several times after reaching the plastic limit. The lump can be formed without crumbling when drier than the plastic limit

14.7.1 Identify the soil as a *lean clay*, CL, if the soil has medium to high dry strength, no or slow dilatancy, and medium toughness and plasticity (see Table 12).

14.7.2 Identify the soil as a *fat clay*, CH, if the soil has high to very high dry strength, no dilatancy, and high toughness and plasticity (see Table 12).

14.7.3 Identify the soil as a *silt*, ML, if the soil has no to low dry strength, slow to rapid dilatancy, and low toughness and plasticity, or is nonplastic (see Table 12).

14.7.4 Identify the soil as an *elastic silt*, MH, if the soil has low to medium dry strength, no to slow dilatancy, and low to medium toughness and plasticity (see Table 12).

NOTE 11—These properties are similar to those for a lean clay. However, the silt will dry quickly on the hand and have a smooth, silky feel when dry. Some soils that would classify as MH in accordance with the criteria in Test Method D 2487 are visually difficult to distinguish from lean clays, CL. It may be necessary to perform laboratory testing for proper identification.

14.8 *Identification of Organic Fine-Grained Soils:*

14.8.1 Identify the soil as an *organic soil*, OL/OH, if the soil contains enough organic particles to influence the soil properties. Organic soils usually have a dark brown to black color and may have an organic odor. Often, organic soils will change color, for example, black to brown, when exposed to the air. Some organic soils will lighten in color significantly when air dried. Organic soils normally will not have a high toughness or plasticity. The thread for the toughness test will be spongy.

NOTE 12—In some cases, through practice and experience, it may be possible to further identify the organic soils as organic silts or organic clays, OL or OH. Correlations between the dilatancy, dry strength, toughness tests, and laboratory tests can be made to identify organic soils in certain deposits of similar materials of known geologic origin.

14.9 If the soil is estimated to have 15 to 25 % sand or gravel, or both, the words "with sand" or "with gravel" (whichever is more predominant) shall be added to the group name. For example: "lean clay with sand, CL" or "silt with gravel, ML" (see Figs. 1a and 1b). If the percentage of sand is equal to the percentage of gravel, use "with sand."

14.10 If the soil is estimated to have 30 % or more sand or gravel, or both, the words "sandy" or "gravelly" shall be added to the group name. Add the word "sandy" if there appears to be more sand than gravel. Add the word "gravelly" if there appears to be more gravel than sand. For example: "sandy lean clay, CL", "gravelly fat clay, CH", or "sandy silt, ML" (see Figs. 1a and 1b). If the percentage of sand is equal to the percent of gravel, use "sandy."

15. Procedure for Identifying Coarse-Grained Soils (Contains less than 50 % fines)

15.1 The soil is a *gravel* if the percentage of gravel is estimated to be more than the percentage of sand.

TABLE 12 Identification of Inorganic Fine-Grained Soils from Manual Tests

Soil Symbol	Dry Strength	Dilatancy	Toughness
ML	None to low	Slow to rapid	Low or thread cannot be formed
CL	Medium to high	None to slow	Medium
MH	Low to medium	None to slow	Low to medium
CH	High to very high	None	High

WB012009003SCO

15.2 The soil is a *sand* if the percentage of gravel is estimated to be equal to or less than the percentage of sand.

15.3 The soil is a *clean gravel* or *clean sand* if the percentage of fines is estimated to be 5 % or less.

15.3.1 Identify the soil as a *well-graded gravel*, GW, or as a *well-graded sand*, SW, if it has a wide range of particle sizes and substantial amounts of the intermediate particle sizes.

15.3.2 Identify the soil as a *poorly graded gravel*, GP, or as a *poorly graded sand*, SP, if it consists predominantly of one size (uniformly graded), or it has a wide range of sizes with some intermediate sizes obviously missing (gap or skip graded).

15.4 The soil is either a *gravel with fines* or a *sand with fines* if the percentage of fines is estimated to be 15 % or more.

15.4.1 Identify the soil as a *clayey gravel*, GC, or a *clayey sand*, SC, if the fines are clayey as determined by the procedures in Section 14.

15.4.2 Identify the soil as a *silty gravel*, GM, or a *silty sand*, SM, if the fines are silty as determined by the procedures in Section 14.

15.5 If the soil is estimated to contain 10 % fines, give the soil a dual identification using two group symbols.

15.5.1 The first group symbol shall correspond to a clean gravel or sand (GW, GP, SW, SP) and the second symbol shall correspond to a gravel or sand with fines (GC, GM, SC, SM).

15.5.2 The group name shall correspond to the first group symbol plus the words "with clay" or "with silt" to indicate the plasticity characteristics of the fines. For example: "well-graded gravel with clay, GW-GC" or "poorly graded sand with silt, SP-SM" (see Fig. 2).

15.6 If the specimen is predominantly sand or gravel but contains an estimated 15 % or more of the other coarse-grained constituent, the words "with gravel" or "with sand" shall be added to the group name. For example: "poorly graded gravel with sand, GP" or "clayey sand with gravel, SC" (see Fig. 2).

15.7 If the field sample contains any cobbles or boulders, or both, the words "with cobbles" or "with cobbles and boulders" shall be added to the group name. For example: "silty gravel with cobbles, GM."

16. Report

16.1 The report shall include the information as to origin, and the items indicated in Table 13.

NOTE 13—*Example: Clayey Gravel with Sand and Cobbles, GC*—About 50 % fine to coarse, subrounded to subangular gravel; about 30 % fine to coarse, subrounded sand; about 20 % fines with medium plasticity, high dry strength, no dilatancy, medium toughness; weak reaction with HCl; original field sample had about 5 % (by volume) subrounded cobbles, maximum dimension, 150 mm.

In-Place Conditions—Firm, homogeneous, dry, brown

Geologic Interpretation—Alluvial fan

NOTE 14—Other examples of soil descriptions and identification are given in Appendixes X1 and X2.

NOTE 15—If desired, the percentages of gravel, sand, and fines may be stated in terms indicating a range of percentages, as follows:

Trace—Particles are present but estimated to be less than 5 %

Few—5 to 10 %

Little—15 to 25 %

Some—30 to 45 %

Mostly—50 to 100 %

TABLE 13 Checklist for Description of Soils

1. Group name
2. Group symbol
3. Percent of cobbles or boulders, or both (by volume)
4. Percent of gravel, sand, or fines, or all three (by dry weight)
5. Particle-size range:
   Gravel—fine, coarse
   Sand—fine, medium, coarse
6. Particle angularity: angular, subangular, subrounded, rounded
7. Particle shape: (if appropriate) flat, elongated, flat and elongated
8. Maximum particle size or dimension
9. Hardness of coarse sand and larger particles
10. Plasticity of fines: nonplastic, low, medium, high
11. Dry strength: none, low, medium, high, very high
12. Dilatancy: none, slow, rapid
13. Toughness: low, medium, high
14. Color (in moist condition)
15. Odor (mention only if organic or unusual)
16. Moisture: dry, moist, wet
17. Reaction with HCl: none, weak, strong

For intact samples:

18. Consistency (fine-grained soils only): very soft, soft, firm, hard, very hard
19. Structure: stratified, laminated, fissured, slickensided, lensed, homogeneous
20. Cementation: weak, moderate, strong
21. Local name
22. Geologic interpretation
23. Additional comments: presence of roots or root holes, presence of mica, gypsum, etc., surface coatings on coarse-grained particles, caving or sloughing of auger hole or trench sides, difficulty in augering or excavating, etc.

16.2 If, in the soil description, the soil is identified using a classification group symbol and name as described in Test Method D 2487, it must be distinctly and clearly stated in log forms, summary tables, reports, and the like, that the symbol and name are based on visual-manual procedures.

17. Precision and Bias

17.1 This practice provides qualitative information only, therefore, a precision and bias statement is not applicable.

18. Keywords

18.1 classification; clay; gravel; organic soils; sand; silt; soil classification; soil description; visual classification

WB012009003SCO

APPENDIXES

(Nonmandatory Information)

X1. EXAMPLES OF VISUAL SOIL DESCRIPTIONS

X1.1 The following examples show how the information required in 16.1 can be reported. The information that is included in descriptions should be based on individual circumstances and need.

X1.1.1 *Well-Graded Gravel with Sand (GW)*—About 75 % fine to coarse, hard, subangular gravel; about 25 % fine to coarse, hard, subangular sand; trace of fines; maximum size, 75 mm, brown, dry; no reaction with HCl.

X1.1.2 *Silty Sand with Gravel (SM)*—About 60 % predominantly fine sand; about 25 % silty fines with low plasticity, low dry strength, rapid dilatancy, and low toughness; about 15 % fine, hard, subrounded gravel, a few gravel-size particles fractured with hammer blow; maximum size, 25 mm; no reaction with HCl (Note—Field sample size smaller than recommended).

In-Place Conditions—Firm, stratified and contains lenses of silt 1 to 2 in. (25 to 50 mm) thick, moist, brown to gray; in-place density 106 lb/ft^3; in-place moisture 9 %.

X1.1.3 *Organic Soil (OL/OH)*—About 100 % fines with low plasticity, slow dilatancy, low dry strength, and low toughness; wet, dark brown, organic odor; weak reaction with HCl.

X1.1.4 *Silty Sand with Organic Fines (SM)*—About 75 % fine to coarse, hard, subangular reddish sand; about 25 % organic and silty dark brown nonplastic fines with no dry strength and slow dilatancy; wet; maximum size, coarse sand; weak reaction with HCl.

X1.1.5 *Poorly Graded Gravel with Silt, Sand, Cobbles and Boulders (GP-GM)*—About 75 % fine to coarse, hard, subrounded to subangular gravel; about 15 % fine, hard, subrounded to subangular sand; about 10 % silty nonplastic fines; moist, brown; no reaction with HCl; original field sample had about 5 % (by volume) hard, subrounded cobbles and a trace of hard, subrounded boulders, with a maximum dimension of 18 in. (450 mm).

X2. USING THE IDENTIFICATION PROCEDURE AS A DESCRIPTIVE SYSTEM FOR SHALE, CLAYSTONE, SHELLS, SLAG, CRUSHED ROCK, AND THE LIKE

X2.1 The identification procedure may be used as a descriptive system applied to materials that exist in-situ as shale, claystone, sandstone, siltstone, mudstone, etc., but convert to soils after field or laboratory processing (crushing, slaking, and the like).

X2.2 Materials such as shells, crushed rock, slag, and the like, should be identified as such. However, the procedures used in this practice for describing the particle size and plasticity characteristics may be used in the description of the material. If desired, an identification using a group name and symbol according to this practice may be assigned to aid in describing the material.

X2.3 The group symbol(s) and group names should be placed in quotation marks or noted with some type of distinguishing symbol. See examples.

X2.4 Examples of how group names and symbols can be incororated into a descriptive system for materials that are not naturally occurring soils are as follows:

X2.4.1 *Shale Chunks*—Retrieved as 2 to 4-in. (50 to 100-mm) pieces of shale from power auger hole, dry, brown, no reaction with HCl. After slaking in water for 24 h, material identified as "Sandy Lean Clay (CL)"; about 60 % fines with medium plasticity, high dry strength, no dilatancy, and medium toughness; about 35 % fine to medium, hard sand; about 5 % gravel-size pieces of shale.

X2.4.2 *Crushed Sandstone*—Product of commercial crushing operation; "Poorly Graded Sand with Silt (SP-SM)"; about 90 % fine to medium sand; about 10 % nonplastic fines; dry, reddish-brown, strong reaction with HCl.

X2.4.3 *Broken Shells*—About 60 % gravel-size broken shells; about 30 % sand and sand-size shell pieces; about 10 % fines; "Poorly Graded Gravel with Sand (GP)."

X2.4.4 *Crushed Rock*—Processed from gravel and cobbles in Pit No. 7; "Poorly Graded Gravel (GP)"; about 90 % fine, hard, angular gravel-size particles; about 10 % coarse, hard, angular sand-size particles; dry, tan; no reaction with HCl.

X3. SUGGESTED PROCEDURE FOR USING A BORDERLINE SYMBOL FOR SOILS WITH TWO POSSIBLE IDENTIFICATIONS.

X3.1 Since this practice is based on estimates of particle size distribution and plasticity characteristics, it may be difficult to clearly identify the soil as belonging to one category. To indicate that the soil may fall into one of two possible basic groups, a borderline symbol may be used with the two symbols separated by a slash. For example: SC/CL or CL/CH.

X3.1.1 A borderline symbol may be used when the

WB012009003SCO

X6. RATIONALE

Changes in this version from the previous version, D 2488 – 90, include the addition of X5 on Abbreviated Soil Classification Symbols.

The American Society for Testing and Materials takes no position respecting the validity of any patent rights asserted in connection with any item mentioned in this standard. Users of this standard are expressly advised that determination of the validity of any such patent rights, and the risk of infringement of such rights, are entirely their own responsibility.

This standard is subject to revision at any time by the responsible technical committee and must be reviewed every five years and if not revised, either reapproved or withdrawn. Your comments are invited either for revision of this standard or for additional standards and should be addressed to ASTM Headquarters. Your comments will receive careful consideration at a meeting of the responsible technical committee, which you may attend. If you feel that your comments have not received a fair hearing you should make your views known to the ASTM Committee on Standards, 100 Barr Harbor Drive, West Conshohocken, PA 19428.

WB012009003SCO

STANDARD OPERATING PROCEDURE 6-11

Soil Gas Probe Installation

Purpose and Scope

This Standard Operating Procedure (SOP) provides the Equipment, Materials, Procedures, and Guidelines to install temporary soil gas probes to collect soil gas samples. Soil gas samples will be collected from the following study areas:

- Smelter Area
- Waste Management Area

The soil gas probe installation and abandonment work will be performed by a subcontractor. The procedures in this SOP do not replace more detailed specifications developed or provided by the subcontractor. The subcontractor's procedures will be reviewed for consistency with this SOP before implementation of the work.

This SOP should be used in conjunction with SOP 6-12: *Soil Gas Probe Sampling.*

References

Field Sampling Plan		
Section	6.1.5	Task 5 – Soil Gas Sampling
Figures	A-2 A-3	Solid Matrix Sample Locations, Smelter Parcel Solid Matrix Sample Locations, Waste Management Area
Appendix	B	GPS Coordinates for Sample Locations

Equipment and Materials

Provided by the Direct-push Operator

- Direct-push rig

Sampling (as appropriate)

- Soil gas sampling probes
- Tubing
- Fittings
- Sampling interface assembly
- Hydrated powdered bentonite

Procedures and Guidelines

Gas Probe System Set-up

1. *Obtain soil gas sampling probes*, such as those manufactured by Geo Probe Systems, in sufficient quantity to carry out the assessment without delay to the sampling effort. Note: these systems and their installation can be obtained from geotechnical firms that provide direct push installation. See Figure 1.

   Manufactured soil gas probes that are specifically manufactured for soil gas collection, such as Geo Probe Systems post-run tubing (PRT), facilitate installation, improve sampling, are easily decontaminated between each use, and offer ease of use.

   Coordinate the hardware (i.e. size of tubing, fittings, sampling interface assembly, etc.) that mates the soil gas probe sampling line to the sampling system (i.e., Tedlar bags, Summa canisters, etc.). This step is critical to achieve a leak free system. All connections should be inert gas tight compression fittings (i.e., Swagelok or equal) and all sample transfer lines should be made of Teflon tubing.

2. *Prior to installation of gas probes* at a given location a utility survey must be completed.

3. *The soil gas probes must be decontaminated prior to use*. Steam cleaning is the preferred method of decontamination. Once decontaminated, the probes must be shown to be free of contaminates. As a minimum, a suitably sensitive organic vapor meter should be used for this purpose. Any probe that does not pass decontamination should not be used.

   To minimize decontamination efforts and the potential for cross contamination, when it is practical all gas probe sampling lines should be replaced between uses. Alternatively, a decontamination procedure for cleaning and purging sampling lines will be carried out.

   Handle and store decontaminated soil gas probes in a manner that prevents contamination.

4. *Inspect each gas probe assembly for wear and faulty parts*. Replace probe tips, o-rings, adapters, and probe rods as needed.

   Leak check each probe assembly prior to use. This is conveniently accomplished by inserting the probe tip and applying a vacuum that is greater than the anticipated vacuum that will be encountered during sampling. Any probe assembly that leaks should be repaired and pass a leak check prior to use. Once an assembly has passed a leak check it should not be disassembled prior to use.

5. Experience has shown that probes which are fully assembled (i.e., transfer line is connected to the PRT assembly) prior to being driven provide a much more trouble-free installation (i.e. fewer leaks) than probes installed with the transfer line in place. Installing probes with the transfer line in place requires the use of a slotted drive cap and slotted pull cap. This practice is highly recommended.

Gas Probe Installation & Removal

1. Install probes in a manner that creates a leak free seal between the above ground atmosphere and the probe tip. Achieving a leak free seal may require placement of an inert sealing material (i.e. hydrated powdered bentonite) at the point where the probe penetrates into the ground surface. See Figure 2
2. In the event the direct push installation technique does not work, and a pre-drilled pilot hole is needed, coordinate this procedure with the project engineer. Use of pre-drilled holes will require careful control as to not over drill and may also create the need for back grouting to overcome leakage from the above ground atmosphere (see above).
3. Removal of the probes is to be carried out by trained personnel using the direct push machinery.
5. Ground surface covers shall be replaced and repaired to original condition.

Decontamination

Soil gas probe equipment will be decontaminated before initial use and after the temporary probes have been removed. Decontamination procedures are detailed in SOP 6-24: *Decontamination of Sampling Equipment*.

Investigation Derived Waste Decontamination

Soil and water generated during piezometer installation and development will be contained and managed as detailed in Section 6.4 of the FSP.

Documentation

The field documentation requirements will include recording all observations made during field activities to document the work and potential issues that could affect the quality of field data. The documentation should be entered in a field logbook with consecutively numbered pages and/or the data collection forms. Documentation should include at a minimum:

- Work/sample location
- Date of field activity
- Personnel on-site
- Time of day
- PPE level
- Field methods and procedures
- Field readings and measurements
- Field observations and comments
- Unusual conditions

Attachments

Figure 1 – Assembled Soil/Gas Probe (Ready for Installation)
Figure 2 – Installed Soil/Gas Probe

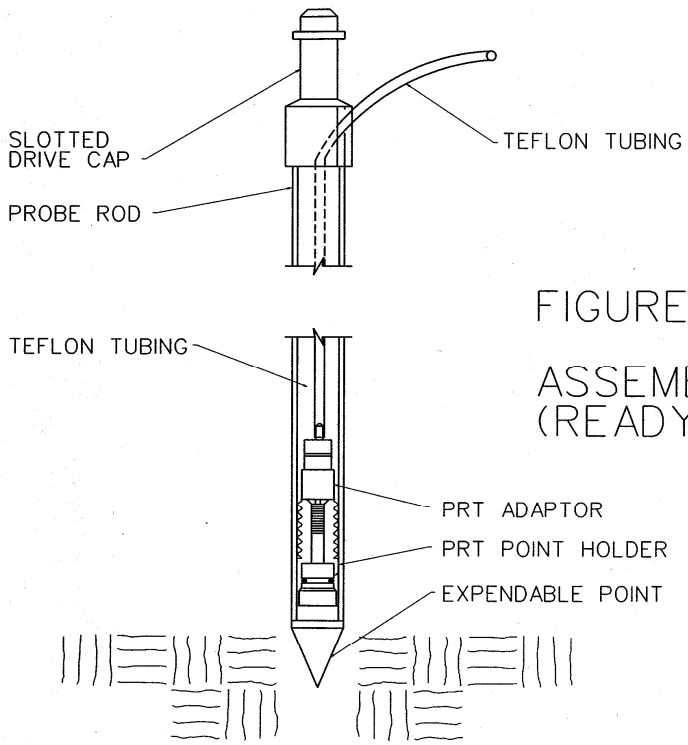

FIGURE 1

ASSEMBLED SOIL/GAS PROBE
(READY FOR INSTALLATION)

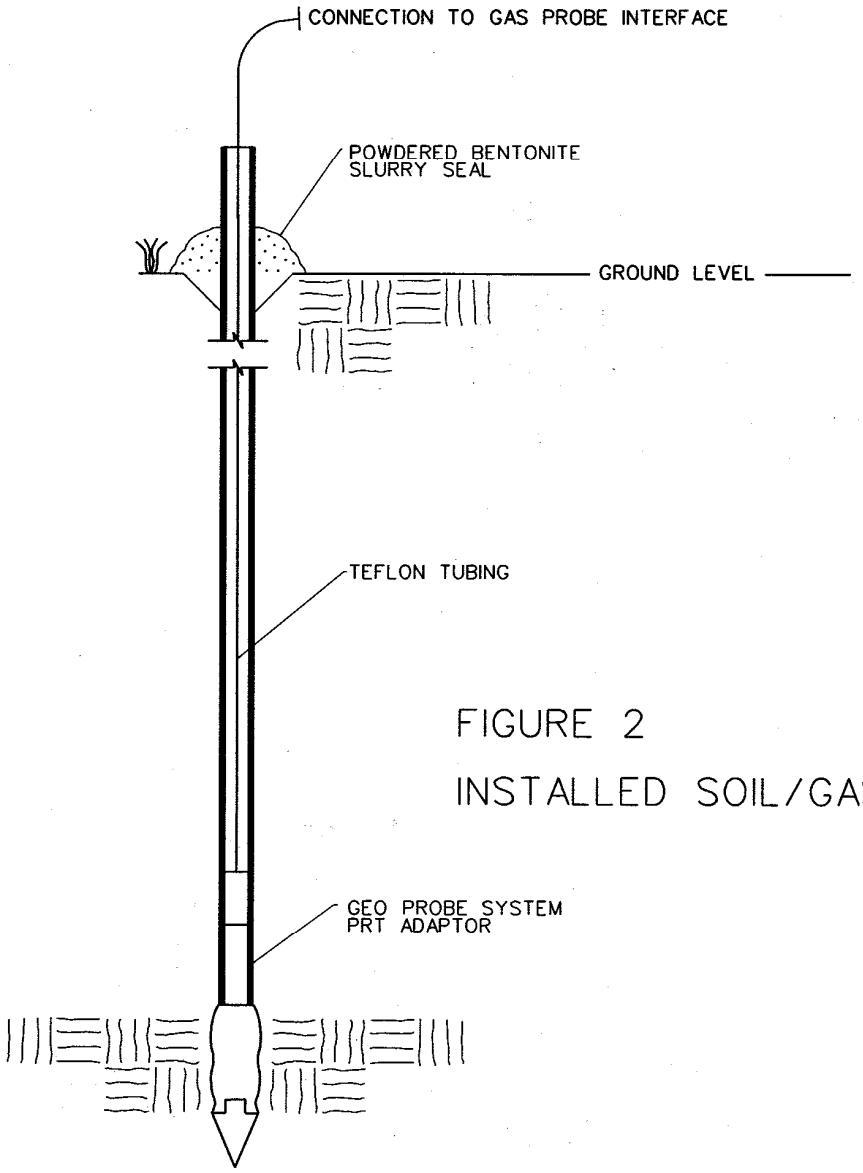

FIGURE 2

INSTALLED SOIL/GAS PROBE

STANDARD OPERATING PROCEDURE 6-12

Soil Gas Probe Sampling

Purpose and Scope

This Standard Operating Procedure (SOP) provides the Equipment, Materials, Procedures, and Guidelines to collect soil gas samples from temporary soil gas probes to. Soil gas samples will be collected from the following study areas:

- Smelter Area
- Waste Management Area

The soil gas probe sampling work will may performed by a subcontractor. The procedures in this SOP do not replace more detailed specifications developed or provided by the subcontractor. The subcontractor's procedures will be reviewed for consistency with this SOP before implementation of the work.

This SOP should be used in conjunction with SOP 6-11: *Soil Gas Probe Installation.*

References

Field Sampling Plan		
Section	6.1.5	Task 5 – Soil Gas Sampling
Table	5-4	Request for Analysis, Soil Gas Matrix Samples
Figures	A-2 A-3	Solid Matrix Sample Locations, Smelter Parcel Solid Matrix Sample Locations, Waste Management Area
Appendix	B	GPS Coordinates for Sample Locations

Equipment and Materials

- Hardware and sampling equipment shown in Figure 1.
- Pre-cleaned sample containers and stainless-steel sampling implements
- Clean nitrile gloves
- Sample coolers and ice
- Log book

Procedures and Guidelines

System Set-up

1. Assemble or obtain the necessary fittings and vacuum gauge to create a soil gas probe and sampling manifold shown in Figure 1. This manifold must be clean, free of oils, and flushed free of VOCs prior to use. Note: use only gas tight fittings such as Swagelok or equivalent. Be sure to place the helium leak check enclosure over the probe, and push the sample tubing through the hole in the cap before attaching the sampling manifold.

2. Adjust the purge system evacuation pump sampling rate to achieve the desired flow rate of 150 milliliters/min. This should be performed at the outlet of the vacuum pump prior to purging, either by use of a suitable flowmeter or determining the amount of time required to fill a 1 liter Tedlar bag.

3. Summa canisters are pre-evacuated by the laboratory. In some cases (i.e. project specific QA) the vacuum will need to be verified in the field prior to use. This is accomplished with a vacuum gauge and instructions supplied by the laboratory.

4. Flow controllers (if used) should come pre-set by the laboratory to sample at a pre-determined rate based on specific project requirements (see Table 1 for the most common options). Verify the flow controller flow rate setting (indicated on the tag). In some cases (i.e. project specific QA) the flow rate will need to be verified in the field prior to use. This is accomplished with a bubble meter, vacuum source, and instructions supplied by the laboratory.

System Leak Checking & Purging

1. Make sure the sampling system is assembled (as shown in Figure 1). The leak check enclosure is placed over the sample probe prior to connection of the sample line to the sampling manifold and the purge system. Do not connect the canister at this time.

2. *Physical Leak Check* - Perform a leak check of the sample manifold system by:

   a. Making sure the gas probe valve (valve #1) is closed and the sample valve (valve #2) is open.

   b. Open the purge valve (valve #3) and start the purge pump. Verify that the flow is set to 150 ml/min.

   c. Close the sample valve (valve #2) and achieve a vacuum gauge reading of 10 inches of Hg or to a vacuum that will be encountered during sampling, which ever is greater.

   d. A leak free system will be evident by closing off the purge valve (valve #3), turning of the purge pump, and observing no loss of vacuum within the sampling manifold system for a period of 30 seconds. Repair any leaks prior to use.

   e. Record the leak check date and time on the field sampling log.

3. *System Purge and Helium Leak Check* -A purge of the soil gas probe and sampling manifold system is required. The helium leak check procedure is also performed during this step. This is accomplished by:

   a. Where the ground surface is soft, the helium leak check enclosure is pressed down slightly into the ground surface. In situations where the ground surface is hard (e.g. asphalt), apply a slight downward pressure to achieve a build up of helium in the leak check enclosure.

   b. Start the flow of helium into the side of the leak check enclosure at 200 ml/min. Let the helium fill the enclosure for a couple of minutes.

c. Turn the helium leak detector on and make sure that the detector is not giving a helium reading before starting the purge. Place the probe of the helium detector in the exhaust port of the flow meter.

d. Purging is carried out by pulling soil gas through the system at a rate of between 150 milliliters /min for a time period sufficient to achieve a purge volume that equals at least 3 dead volumes (internal volume of the in ground annular space, sample line, and sampling manifold system).

e. Open the sample valve (valve #2) and the purge valve (valve #3) and start the purge pump. Verify that the flow rate is still 150 ml/min.

f. To start the soil gas probe purge, open the gas probe valve (valve #1) and close the sample valve (valve #2) at the same time, and start timing.

g. During the purge, observe the helium detector for indication of soil gas probe leakage (e.g. infiltration of ambient air into the probe). If a helium reading of >1% is observed, then the probe leak check has failed and corrective action should be taken. This includes first checking the fittings and connections and trying another purge and leak check. It may also result in removing the soil gas probe and re-installing it in a nearby location.

h. If the vacuum gauge reads >15" during the purge, then close the purge valve (valve #3) and monitor the vacuum in the manifold and probe. If there is no significant change after a minute, then there is the lack of a significant amount of soil gas and the vacuum is too great to take a soil gas sample. Several things can cause this. Consult with the project manager and take corrective action.

    i. The soil formation is too 'tight' (i.e. high clay or moisture content). Try a different depth or location

    ii. With a GeoProbe style probe system, the expendable tip may not have released when the probe was retracted. Try retracting the probe a little further, or using a long thin rod to poke the tip loose.

    iii. If water is visible in the flexible soil gas tubing, stop the purging immediately. It is not possible to take a soil gas sample at that depth or location.

i. At the end of the pre-determined purge time (usually around a couple minutes) and after the system is verified to be leak free, close the purge valve (valve #3). Do not open it again. Doing so will result in loss of the purge integrity and requires re-purging. Turn off the helium leak detector.

j. Record the purge date, time, purge rate, leak check result, and purge volume on the field sampling log.

k. Immediately move on to the sampling phase. Little to no delay should occur between purging and sampling.

Sampling

1. The Summa canisters are certified clean and evacuated by the laboratory to near absolute zero pressure. Care should be used at all times to prevent inadvertent loss of canister vacuum. Never open the canister's valve unless the intent is to collect sample.
2. Attach the canister to the flow controller and then connect the flow controller to the sample valve (valve #2) on the sampling manifold.
3. Before taking the sample, confirm that the sampling system valves are set as follows: 1) the purge valve (valve #3) is confirmed to be closed, gas probe valve (valve #1) is open, and 2) the sample valve is (valve #2) is open.
4. Slowly open the canister's valve approximately on full turn.
5. After sampling for the appropriate amount of time (determined from project instructions, see Table 1), close the sample valve (valve #2) and the canister's valve. Remove the canister from the sampling manifold.
6. Record the sampling date, time, canister ID, flow controller ID, and any other observation pertinent to the sampling event on the field sampling log.
7. Fill out all appropriate documentation (sampling forms, sample labels, chain of custody, sample tags, etc.).
8. Disassemble the sampling system.

Sample Handling and Shipping

1. If shipping is required, pack the sample canisters in a rigid wall shipping container such as a cooler or heavy duty cardboard box (ice is not required). Never pack the cans with other objects or materials that could cause them to be punctured or damaged.
2. Place a custody seal over the openings to the shipping container.
3. Ship immediately to the laboratory for analysis.

Documentation

The field documentation requirements will include recording all observations made during field activities to document the work and potential issues that could affect the quality of field data. The documentation should be entered in a field logbook with consecutively numbered pages and/or the data collection forms. Documentation should include at a minimum:

- Work/sample location
- Date of field activity
- Personnel on-site
- Time of day
- PPE level
- Field methods and procedures
- Field readings and measurements

- Field observations and comments
- Unusual conditions

Attachments

- Table 1 – Common Sampling Rates for Soil Gas Sampling
- Figure 1 – Soil Gas Sampling System
- Sol Gas Field Sampling Field Log

Table 1 – Common Sampling Rates for Soil Gas Sampling

Can Size	Length of Sampling Time	Sampling Flow Rate (ml/min)
6 Liter	1 hour	90
6 Liter	8 hours	11.25
6 Liter	24 hours	3.75
1 Liter	5 minutes	180
1 Liter	1 hour	15
850 ml	5 minutes	150
850 ml	1 hour	12

Figure 1

Soil Gas Sampling System

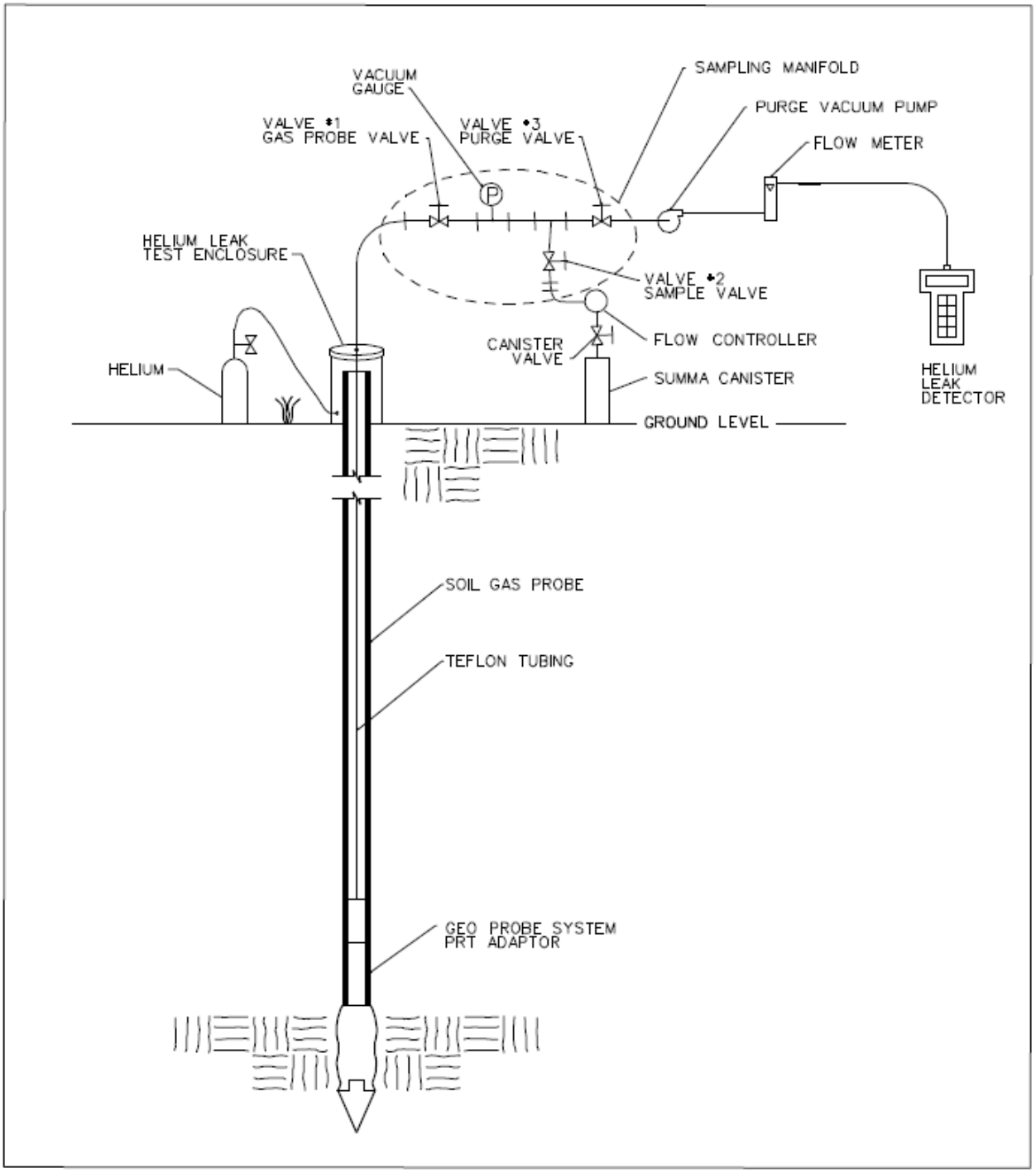

CH2MHILL ***Applied Sciences Laboratory***

Indoor Vapor Intrusion Assessment
Soil Gas Sampling Field Log

Sheet _ of _

Project Info

Project Name: ..... **Project # :** .....

By: ..... **Date:** .....

Structure

Identification: .....

Address: .....

Sample Location type:

- ☐ concrete slab on grade
- ☐ concrete footing w/crawl space
- ☐ basement
- ☐ Yard or Driveway
- ☐ other (describe) .....

Soil Gas Sampling System

Probe type (describe): .....

Probe to sample interface system (describe): .....

Sample collection type: ☐ Syringe ☐ Tedlar bag ☐ Summa canister

Other info (describe other aspects) .....

Soil Gas Probe Purging & Sampling Log

Sample location (show in diagram)	1	2	3	4
Sample Identification (field ID)				
Time Installed				
Depth of installed probe (feet bgs)				
Leak check (probe/sampling interface)				
Calculated dead volume (1 purge volume), cc				
Purge rate, cc/min.				
Purge duration, min.				
Purge vacuum, " Hg				
Max PID Reading, ppmv (optional)				
Purge completed (time of day)				
Sampling period started (time of day)				
Sampling rate, cc/min				
Sampling vacuum, " Hg				
Sampling period ended (time of day)				

Observations and Comments: .....

STANDARD OPERATING PROCEDURE 6-13

General Guidance for Cone Penetrometer Testing (CPT)

Purpose and Scope

This Standard Operating Procedure (SOP) provides the Equipment, Materials, Procedures, and Guidelines for the performance of Cone Penetrometer Testing (CPT) within the semiperched aquifer zone to evaluate subsurface lithology, physical properties, and general water quality. The CPT results will be used to help plan and design the deeper groundwater monitoring wells to be installed within the semiperched aquifer zone.

- **Smelter Parcel.** CPT borings will be performed at 2 locations, one in the process building area and one in the southeast area. The CPT in the process building are will be pushed to 25 feet bgs, approximately 5 to 10 feet into native soils. The CPT in the southeast area will be pushed to 160 feet bgs to complement the two deep CPTs to be pushed to this depth at the north and south edge of the WMU. These three deep CPTs will be pushed before the deeper Semi-perched Aquifer groundwater monitoring wells are installed to help design these wells as described below.
- **Waste Management Area.** CPT borings will be performed at 4 locations, 2 on top of the WMU and 2 on the north and south edges of the WMU. The CPTs on top of the WMU will be pushed to 50 feet bgs, approximately 5 feet into native soils. The CPTs on the north and south edges of the WMU will be pushed to 160 feet bgs to complement the one deep CPT to be pushed to this depth at the Smelter Parcel. These three deep CPTs will be pushed before the deeper Semi-perched Aquifer groundwater monitoring wells are installed to help design these wells as described below.

The CPT testing will be performed by a subcontractor. The procedures in this SOP do not replace more detailed specifications developed or provided by the subcontractor. The subcontractor's procedures will be reviewed for consistency with this SOP before implementation of the work.

References

Field Sampling Plan		
Sections	6.1.4 6.1.7	Task 4 – Solid Matrix Sampling Task 7 – Monitoring Well and Piezometer Installation and Surveying
Figures	A-2 A-3	Solid Matrix Sample Locations, Smelter Parcel Solid Matrix Sample Locations, Waste Management Area
Appendixes	B	GPS Coordinates for Sample Locations

Equipment and Materials

- Cone penetrometer test rig
- *In situ* instrumentation
  - Standard piezometer cone (piezocone) that meets ASTM D-5778
  - Electrical Conductivity (EC)/Hydraulic Profiling Tool (HPT) by Geoprobe
- Associated rods, probes, and decontamination materials

The standard piezocone and the EC/HPT cone are run in separate boreholes.

Standard Piezocone

Standard piezocone *allows the user to* determine soil type and the physical and mechanical properties of the subsurface strata. The CPT procedure consists of pushing a cone-tipped cylindrical probe into the ground while simultaneously measuring the resistance to penetration (American Society for Testing and Materials [ASTM] Standard D 3441-86). The CPT probe contains two strain-gauge load cells that measure the soil-bearing resistance acting on the conical tip of the probe and the frictional resistance sensed along a friction sleeve. In accordance with ASTM Standard D5778-95, the cone is advanced at a rate of two centimeters per second with the driving force provided by hydraulic rams mounted in the CPT rig.
While the CPT rods are advanced, tip resistance (Qc), sleeve friction (Fs), and dynamic pore pressure (Ut) are measured, plotted, and digitally recorded, as a function of depth below ground surface. The measurements are recorded at 5-centimeter intervals, and transmitted as a voltage signal through a cable inside the hollow push rods to a computerized data acquisition system inside the CPT rig. The on-board computer stores the data for on-site plotting and interpretation. The combined data from the tip resistance and sleeve friction form the basis of the soil classification (e.g., sand, silt, clay, etc.), which is identified using Campanella and Robertson's Simplified Soil Behavior Chart.

Electrical Conductivity (EC)/Hydraulic Profiling Tool (HPT) by Geoprobe

The EC/HPT allows the user to create fast, continuous, real-time profiles of electrical conductivity and soil hydraulic properties in both fine- and coarse-grained material. The HPT uses a sensitive, downhole transducer to measure the pressure response of the soil to injection of water. One primary use of this tool is to locate and define preferential migration pathways for contaminants in the subsurface. The on-board computer stores the data for on-site plotting and interpretation.

Procedures and Guidelines

Field Set-up

1. Confirm that underground utilities are not present prior to beginning work.
2. Assemble equipment and check for proper operation
3. Decontaminate equipment

Field Investigation

1. Zero the computer system at ground surface prior to each CPT run
2. Advance boring using the truck- or track-mounted hydraulic ram on the CPT rig
3. Record depths by the length and number of rods used during the CPT run. Remember to measure the length of each rod with the tape measure prior to use to ensure accuracy
4. Collect and record CPT data using the field logbook and/or data output from the CPT rig computer
5. Abandon the boring by filling the open borehole with a bentonite-cement grout. Fill the borehole from the bottom up using a tremie pipe

Decontamination

CPT equipment will be decontaminated before initial use and after the development of each piezometer. Decontamination procedures are detailed in SOP 6-24: *Decontamination of Sampling Equipment*.

Investigation Derived Waste Decontamination

Soil and water generated during piezometer installation and development will be contained and managed as detailed in Section 6.4 of the FSP.

Documentation

The field documentation requirements will include recording all observations made during field activities to document the work and potential issues that could affect the quality of field data. The documentation should be entered in a field logbook with consecutively numbered pages and/or the data collection forms. Documentation should include at a minimum:

- Work/sample location
- Date of field activity
- Personnel on-site
- Time of day
- PPE level
- Field methods and procedures
- Field readings and measurements
- Field observations and comments
- Unusual conditions
- Decontamination procedures
- Investigation derived waste procedures

Attachments

None.

STANDARD OPERATING PROCEDURE 6-14

Installation of Shallow Monitoring Wells

Purpose and Scope

This Standard Operating Procedure (SOP) provides the Equipment, Materials, Procedures, and Guidelines for installation and development of the shallow water table groundwater monitoring wells within the semiperched aquifer zone. The monitoring wells will be installed and developed using either hollow-stem auger (HSA) or sonic drilling methods.

The following 8 shallow water table groundwater monitoring wells will be installed:

- MW-20 – Assess potential contamination from former smelter building operations
- MW-21 – Assess potential contamination from former and current oil/fuel tanks
- MW-22 – Assess potential offsite contaminant migration from smelter area
- MW-23 – Assess offsite and potential background conditions
- MW-24 – Assess potential contamination from waste management area
- MW-25 – Assess potential offsite contamination from waste management area
- MW-26 – Assess offsite and potential background conditions
- MW-27 – Assess offsite and potential background conditions

The wells will be constructed with 2-inch-diameter Schedule 40 PVC casing and 10-foot-long screens.

The monitoring wells will be installed and developed by a subcontractor. The procedures in this SOP do not replace more detailed specifications developed or provided by the subcontractor. The subcontractor's procedures will be reviewed for consistency with this SOP before implementation of the work.

References

Field Sampling Plan		
Section	6.1.7	Task 7 – Monitoring Well and Piezometer Installation and Surveying
Tale	6-1	Monitoring Well Construction, Elevations, and Depths
Figure	A-8	Groundwater Monitoring Well Locations
Appendixes	B	GPS Coordinates for Sample Locations

Equipment and Materials

Drilling

- Drilling rig (hollow-stem auger or sonic) and associated tools and equipment

Well Riser/Screen and Associated Materials

- Polyvinyl chloride (PVC), Schedule 40, 2-inch ID, flush-threaded riser

- PVC, Schedule 40, 2-inch ID, flush-threaded, factory slotted screen
- PVC bottom cap, threaded to match the well screen
- PVC or stainless-steel centering guides (if used)
- Above-grade well completion: PVC well cap, threaded or push-on type, vented
- Flush-mount well completion: PVC well cap, locking, leak-proof seal
- Stainless steel to be used as appropriate

Sand

- Clean silica sand, provided in factory-sealed bags, well-rounded, containing no organic material, anhydrite, gypsum, mica, or calcareous material; primary (coarse) filter pack, and secondary (fine) filter pack. Grain size determined based on sediments observed during drilling.

Bentonite

- Pure, additive-free bentonite pellets or chips
- Pure, additive-free powdered bentonite
- Coated bentonite pellets; coating must biodegrade within 7 days
- Cement-Bentonite Grout: proportion of 6 to 8 gallons of water per 94-pound bag of Portland cement; 3 to 6 pounds of bentonite added per bag of cement to reduce shrinkage

Protective Casing

- Above-grade well completion: 6-inch minimum ID steel pipe with locking cover, diameter at least 2 inches greater than the well casing, painted with epoxy paint for rust protection; heavy duty lock; protective posts if appropriate
- Flush-mount well completion: Morrison 9-inch or 12-inch 519 manhole cover, or equivalent; rubber seal to prevent leakage; locking cover inside of road box

Well Development

- Surge block
- Well-development pump and associated equipment
- Calibrated meters to ensure pH, temperature, specific conductance, ORP, and dissolved oxygen of development water
- Containers (e.g., DOT-approved 55-gallon drums) for water produced from well.

Procedures and Guidelines

Field Set-up

1. Confirm that underground utilities are not present prior to beginning work.
2. Assemble equipment and check for proper operation

3. Decontaminate equipment

Drill Method, Option 1 – Hollow-Stem Auger Drilling

Drill borehole using continuous-flight hollow-stem augers with a minimum 4.25-inch inside diameter. The bit of the auger is placed at the ground surface and then turned with the drilling rig. To collect split spoon samples, the auger is advanced to the top of the sampling depth, and the split-spoon sample is collected from below the auger head. The split spoon is advanced through repeated blows from a 140- or 300-pound hammer dropped from a height of 30 inches. Thin-walled tube samplers are advanced by pressing down on the rods with the weight of the drilling rig. Split-spoon samples will be collected continually for chemical analysis and/or lithologic classification.

The use of water to assist in hollow-stem auger drilling for monitoring well installation will be avoided, unless required for such conditions as running sands.

Drill Method, Option 2 – Sonic Drilling

Drill borehole using sonic drilling method and core barrel with a minimum 8-inch inside diameter. Continuous core soil samples (6-inches outside diameter) will be collected for lithologic classification.

The use of water and drilling fluid to assist in sonic drilling for monitoring well installation will be avoided, unless required for such conditions as running sands.

Monitoring-Well Installation

Shallow monitoring wells will be constructed inside the hollow-stem augers or sonic drill casing, once the borehole has been advanced to the desired depth. If the borehole has been drilled to a depth greater than that at which the well is to be set, the borehole will be backfilled with bentonite pellets or chips to a depth approximately 1 foot below the intended well depth. Approximately 1 foot of clean sand will be placed on top of the bentonite to return the borehole to the proper depth for well installation.

The appropriate lengths of well screen and casing will be joined watertight and lowered inside the augers or sonic casing to the bottom of the borehole. Centering guides, if used, will be placed at the bottom of the screen and above the interval in which the bentonite seal is placed.

Selection of the filter pack and well screen intervals for the shallow monitoring wells shall be made in the field.

A primary sand pack consisting of clean silica sand will be placed around the well screen. The sand will be placed into the borehole at a uniform rate, in a manner that will allow even placement of the sand pack. The augers will be raised gradually during sand pack installation to avoid caving of the borehole wall; at no time will the augers be raised higher than the top of the sand pack during installation. During placement of the sand, the position of the top of the sand will be continuously sounded. The primary sand pack will be extended from the bottom of the borehole to a minimum height of 2 feet above the top of the well screen. A secondary, finer-grained sand pack will be installed for a minimum of 1 foot above the coarse sand pack. Heights of the coarse and fine sand packs and bentonite seal

may be modified in the field to account for a shallow water table and a small saturated thickness of the surficial aquifer.

A bentonite seal at least 2 feet thick will be placed above the sand pack. The seal will be placed into the borehole in a manner that will prevent bridging. The position of the top of the bentonite seal will be verified using a weighted tape measure. If all or a portion of the bentonite seal is above the water table, clean water will be added to hydrate the bentonite. A hydration period of at least 30 minutes will be required following installation of the bentonite seal.

Above the bentonite seal, an annular seal of cement-bentonite grout will be placed. The cement-bentonite grout will be installed continuously in one operation from the bottom of the space to be grouted to the ground surface through a tremie pipe. The tremie pipe must be plugged at the bottom and have small openings along the sides of the bottom 1-foot length of pipe. This will allow the grout to diffuse laterally into the borehole and not disturb the bentonite pellet seal.

Well Completion

For monitoring wells that will be completed above-grade, a locking steel protective casing set in a concrete pad will be installed. The steel protective casing will extend at least 3 feet into the ground and 2 feet above ground but should not penetrate the bentonite seal. The concrete pad will be square, approximately 3 feet on a side, and poured into wooden forms. The concrete will be sloped away from the protective casing.

Guard posts may be installed in high-traffic areas for additional protection. Four steel guard posts will be installed around the protective casing. Guard posts will be concrete-filled, at least 3 inches in diameter, and will extend at least 2 feet into the ground and 3 feet above the ground. The protective casing and guard posts will be painted with an epoxy paint to prevent rust.

For monitoring wells with flush-mount completions, Morrison 9-inch or 12-inch 519 manhole cover or equivalent, with a rubber-sealed cover and drain will be installed. The top of the manhole cover will be positioned approximately 1 inch above grade. A square concrete pad, approximately 2 to 3 feet per side, will be installed as a concrete collar surrounding the road box cover, and will slope uniformly downward to the adjacent grade. The road box and installation thereof will be of sufficient strength to withstand normal vehicular traffic.

Concrete pads installed at all wells will be a minimum of 6 inches below grade. The concrete pad will be 12 inches thick at the center and taper to 6-inch thick at the edge. The surface of the pad should slope away from the protective casing to prevent water from pooling around the casing. Protective casing, guard posts, and flush mounts will be installed into this concrete.

Each well will be properly labeled on the exterior of the locking cap or protective casing with a metal stamp indicating the permanent well number.

Well Development

Well development will be accomplished using a combination of surging throughout the well screen and pumping, until the physical and chemical parameters of the discharge water that are measured in the field have stabilized and the turbidity of the discharge water is substantially reduced. Fine-grained materials in the surficial aquifer at the site may not allow low turbidity results to be achieved.

The surging apparatus will include a surge block. Well development will begin by surging the well screen, starting at the bottom of the screen and proceeding upwards, throughout the screened zone. Following surging, the well will be pumped to remove the fine materials that have been drawn into the well. During pumping, measurements of pH, temperature, and specific conductance will be recorded.

Development will continue by alternately surging and pumping until the discharge water is free from sand and silt, the turbidity is substantially reduced, and the pH, temperature, and specific conductance have stabilized at regional background levels, based on historical data. Development will continue for a minimum of 10 well volumes and until the water removed from the well is as clear of turbidity as practicable.

Well development equipment will be decontaminated prior to initial use and after the development of each well. Decontamination procedures are detailed in SOP 6-24: *Decontamination of Sampling Equipment*. Water generated during well development will be contained and managed as detailed in Section 6.4 of the FSP.

Decontamination

Monitoring well installation and development equipment will be decontaminated before initial use and after the development of each piezometer. Decontamination procedures are detailed in SOP 6-24: *Decontamination of Sampling Equipment*.

Investigation Derived Waste Decontamination

Soil and water generated during piezometer installation and development will be contained and managed as detailed in Section 6.4 of the FSP.

Documentation

The field documentation requirements will include recording all observations made during field activities to document the work and potential issues that could affect the quality of field data. The documentation should be entered in a field logbook with consecutively numbered pages and/or the data collection forms. Documentation should include at a minimum:

- Work/sample location
- Date of field activity
- Personnel on-site
- Time of day
- PPE level
- Field methods and procedures

- Field readings and measurements
- Field observations and comments
- Unusual conditions
- Decontamination procedures
- Investigation derived waste procedures

Attachments

Figure 1 – Schematic diagram of typical monitoring well construction.

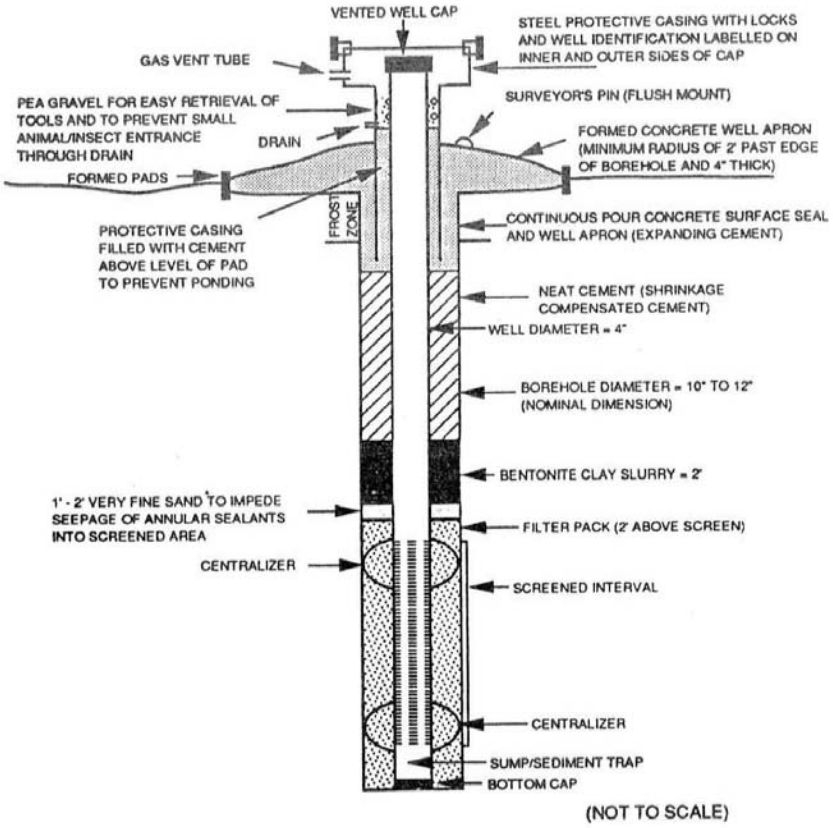

Figure 1. Diagram of a typical monitoring well. From USEPA (1991).

STANDARD OPERATING PROCEDURE 6-15

Installation of Deep Monitoring Wells

Purpose and Scope

This Standard Operating Procedure (SOP) provides the Equipment, Materials, Procedures, and Guidelines for installation and development of the deeper groundwater monitoring wells within the semiperched aquifer zone. The monitoring wells will be installed and developed using sonic drilling methods.

The following 4 deeper semiperched aquifer well pairs (8 wells) will be installed around the perimeter of the WMU:

- MW-2C and MW-2D – East side of WMU
- MW-3C and MW-3D – South side of WMU
- MW-6C and MW-6D – West side of WMU
- MW-19C and MW-19D – North side of WMU

The wells will be constructed with 2-inch-diameter Schedule 80 PVC casing and 10-foot-long screens.

The monitoring wells will be installed and developed by a subcontractor. The procedures in this SOP do not replace more detailed specifications developed or provided by the subcontractor. The subcontractor's procedures will be reviewed for consistency with this SOP before implementation of the work.

References

Field Sampling Plan		
Section	6.1.7	Task 7 – Monitoring Well and Piezometer Installation and Surveying
Tale	6-1	Monitoring Well Construction, Elevations, and Depths
Figure	A-8	Groundwater Monitoring Well Locations
Appendixes	B	GPS Coordinates for Sample Locations

Equipment and Materials

Drilling

- Sonic drilling rig
- Temporary outer steel casing
- Drill rods and core barrel

Well Riser/Screen

- Polyvinyl chloride (PVC), Schedule 80, minimum 2-inch ID, flush-threaded riser
- PVC, Schedule 80, minimum 2-inch ID, flush-threaded, factory slotted screen.

Bottom Cap

- PVC, threaded to match the well screen
- Centering guides

Well Cap

- Above-grade well completion: PVC, threaded or push-on type, vented
- Flush-mount well completion: PVC, locking, leak-proof seal
- Stainless steel to be used as appropriate

Sand

- Clean silica sand, provided in factory-sealed bags, well-rounded, containing no organic material, anhydrite, gypsum, mica, or calcareous material; primary (coarse) filter pack, and secondary (fine) filter pack. Grain size determined based on sediments observed during drilling.

Bentonite

- Pure, additive-free bentonite pellets
- Pure, additive-free powdered bentonite
- Coated bentonite pellets; coating must biodegrade within 7 days
- Cement-Bentonite Grout: proportion of 6 to 8 gallons of water per 94-pound bag of Portland cement; 3 to 6 pounds of bentonite added per bag of cement to reduce shrinkage

Protective Casing

- Above-grade well completion: 6-inch minimum ID steel pipe with locking cover, diameter at least 2 inches greater than the well casing, painted with epoxy paint for rust protection; heavy duty lock; protective posts if appropriate
- Flush-mount well completion: Morrison 9-inch or 12-inch 519 manhole cover, or equivalent; rubber seal to prevent leakage; locking cover inside of road box

Well Development

- Surge block
- Well-development pump and associated equipment
- Calibrated meters to measure pH, temperature, specific conductance, ORP, and dissolved oxygen of development water
- Containers (e.g., 55-gallon drums) for water produced from well.

Procedures and Guidelines

Field Set-up

1. Confirm that underground utilities are not present prior to beginning work.
2. Assemble equipment and check for proper operation
3. Decontaminate equipment

Drill Method

Drill borehole using sonic drilling method and core barrel with a minimum 8-inch inside diameter. Continuous core soil samples (6-inches outside diameter) will be collected for lithologic classification.

The use of water and drilling fluid to assist in sonic drilling for monitoring well installation will be avoided, unless required for such conditions as running sands.

Monitoring Well Installation

Monitoring wells will be constructed inside the outer casing, once the borehole has been advanced to the desired depth. Following setting the well screen, riser, filter pack, and bentonite seal, the well will be grouted. If the borehole has been drilled to a depth greater than that at which the well is to be set, the borehole will be backfilled with bentonite pellets or a bentonite-cement slurry to a depth approximately 1 foot below the intended well depth. Approximately 1 foot of clean sand will be placed on top of the bentonite to return the borehole to the proper depth for well installation.

The appropriate lengths of well screen and casing will be joined watertight and lowered inside the temporary casing to the bottom of the borehole. Centering guides, if used, will be placed at the bottom of the screen and above the interval in which the bentonite seal is placed.

Selection of the filter pack and well screen intervals for the shallow monitoring wells will be made in the field.

A primary sand pack consisting of clean silica sand will be placed around the well screen. The sand will be placed into the borehole at a uniform rate, in a manner that will allow even placement of the sand pack. The temporary casing will be raised gradually during sand pack installation to avoid caving of the borehole wall; at no time will the temporary casing be raised higher than the top of the sand pack during installation. During placement of the sand, the position of the top of the sand will be continuously sounded. The primary sand pack will be extended from the bottom of the borehole to a minimum height of 2 feet above the top of the well screen. A secondary, finer-grained sand pack will be installed for a minimum of 1 foot above the coarse sand pack. Heights of the coarse and fine sand packs and bentonite seal may be modified in the field to account for the shallow water table and small saturated thickness of the surficial aquifer.

A bentonite seal at least 2 feet thick will be placed above the sand pack. The seal will be placed into the borehole in a manner that will prevent bridging. The position of the top of the bentonite seal will be verified using a weighted tape measure. If all or a portion of the

bentonite seal is above the water table, clean water will be added to hydrate the bentonite. A hydration period of at least 30 minutes will be required following installation of the bentonite seal.

Above the bentonite seal, an annular seal of cement-bentonite grout will be placed. The cement-bentonite grout will be installed continuously in one operation from the bottom of the space to be grouted to the ground surface through a tremie pipe. The tremie pipe must be plugged at the bottom and have small openings along the sides of the bottom 1-foot length of pipe. This will allow the grout to diffuse laterally into the borehole and not disturb the bentonite pellet seal.

Well Completion

For monitoring wells that will be completed above-grade, a locking steel protective casing set in a concrete pad will be installed. The steel protective casing will extend at least 3 feet into the ground and 2 feet above ground but should not penetrate the bentonite seal. The concrete pad will be square, approximately 3 feet on a side, and poured into wooden forms. The concrete will be sloped away from the protective casing.

Guard posts may be installed in high-traffic areas for additional protection. Four steel guard posts will be installed around the protective casing, within the edges of the concrete pad. Guard posts will be concrete-filled, at least 2 inches in diameter, and will extend at least 2 feet into the ground and 3 feet above the ground. The protective casing and guard posts will be painted with an epoxy paint to prevent rust.

For monitoring wells with flush-mount completions, Morrison 9-inch or 12-inch 519 manhole cover or equivalent, with a rubber-sealed cover and drain will be installed. The top of the manhole cover will be positioned approximately 1 inch above grade. A square concrete pad, approximately 3 feet per side, will be installed as a concrete collar surrounding the road box cover, and will slope uniformly downward to the adjacent grade. The road box and installation will be of sufficient strength to withstand normal vehicular traffic.

Concrete pads installed at all wells will be a minimum of 6 inches below grade. The concrete pad will be 12-inches thick at the center and taper to 6-inch thick at the edge. The surface of the pad should slope away from the protective casing to prevent water from pooling around the casing. Protective casing, guard posts, and flush mounts will be installed into this concrete.

Each well will be properly labeled on the exterior of the locking cap or protective casing with a metal stamp indicating the permanent well number.

Well Development

Well development will be accomplished using a combination of surging throughout the well screen and pumping, until the physical and chemical parameters of the discharge water that are measured in the field have stabilized and the turbidity of the discharge water is substantially reduced. Fine-grained materials in the surficial aquifer at the site may not allow low turbidity results to be achieved.

The surging apparatus will include a surge block. Well development will begin by surging the well screen, starting at the bottom of the screen and proceeding upwards, throughout the screened zone. Following surging, the well will be pumped to remove the fine materials that have been drawn into the well. During pumping, measurements of pH, temperature, and specific conductance will be recorded.

Development will continue by alternately surging and pumping until the discharge water is free from sand and silt, the turbidity is substantially reduced, and the pH, temperature, and specific conductance have stabilized at regional background levels, based on historical data. Development will continue for a minimum of 10 well volumes and until the water removed from the well is as clear of turbidity as practicable.

Decontamination

Monitoring well installation and development equipment will be decontaminated before initial use and after the development of each piezometer. Decontamination procedures are detailed in SOP 6-24: *Decontamination of Sampling Equipment*.

Investigation Derived Waste Decontamination

Soil and water generated during piezometer installation and development will be contained and managed as detailed in Section 6.4 of the FSP.

Documentation

The field documentation requirements will include recording all observations made during field activities to document the work and potential issues that could affect the quality of field data. The documentation should be entered in a field logbook with consecutively numbered pages and/or the data collection forms. Documentation should include at a minimum:

- Work/sample location
- Date of field activity
- Personnel on-site
- Time of day
- PPE level
- Field methods and procedures
- Field readings and measurements
- Field observations and comments
- Unusual conditions
- Decontamination procedures
- Investigation derived waste procedures

Attachments

Figure 1 – Schematic diagram of typical monitoring well construction.

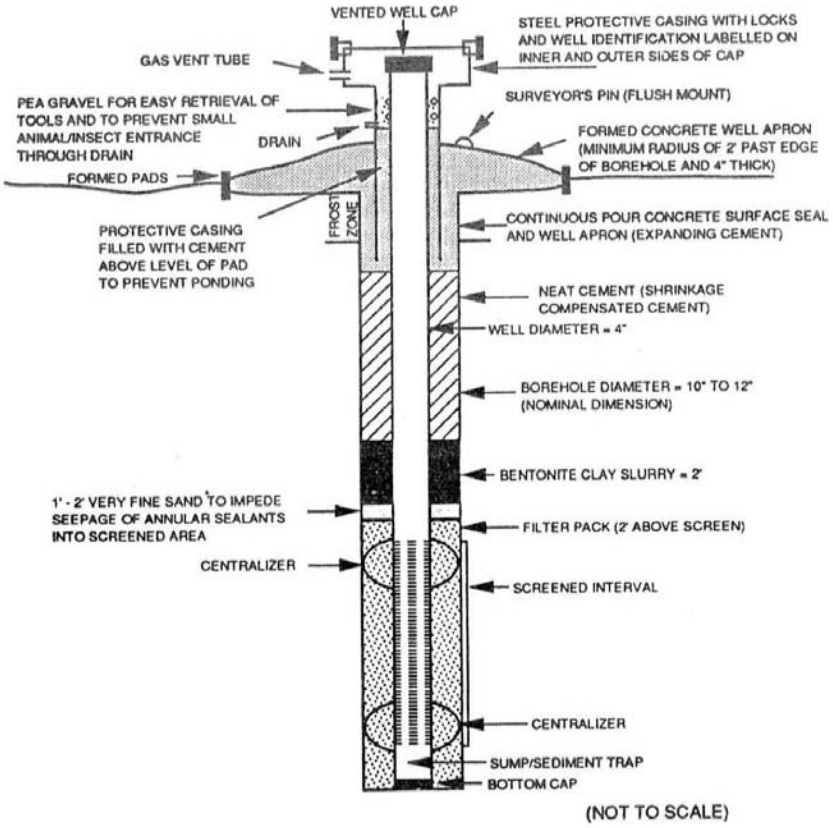

Figure 1. Diagram of a typical monitoring well. From USEPA (1991).

STANDARD OPERATING PROCEDURE 6-16

Installation of Piezometers

Purpose and Scope

This Standard Operating Procedure (SOP) provides the Equipment, Materials, Procedures, and Guidelines for the installation and development of the shallow nested piezometers within the semiperched aquifer zone that will be used to evaluate the hydraulic effects of the Oxnard Sewer Line on shallow groundwater elevations and flow. The piezometers will be installed and developed using direct push methods and constructed using pre-pack screens. Each of the piezometer nests will be installed approximately 10 feet south of the 3.5-foot-diameter sewer line. The piezometer screens will be installed at the following depths, each in separate direct-push boreholes:

- The shallow "A" piezometer will be installed 5 to 10 feet above the top of the sewer line.
- The middle "B" piezometer will be installed at the mid-point of the sewer line.
- The deep "C" piezometer will be installed 5 to 10 feet below the sewer line.

The piezometers will be installed and developed by a subcontractor. The procedures in this SOP do not replace more detailed specifications developed or provided by the subcontractor. The subcontractor's procedures will be reviewed for consistency with this SOP before implementation of the work.

References

Field Sampling Plan		
Sections	6.1.7	Task 7 – Monitoring Well and Piezometer Installation and Surveying
Tables	6-2 6-3	Oxnard Sewer Line Construction, Elevations, and Depths Piezometer Construction, Elevations, and Depths
Figures	6-1 A-8	Oxnard Sewer Line and Piezometer Elevations Groundwater Monitoring Well Locations
Appendixes	B	GPS Coordinates for Sample Locations

Equipment and Materials

- Direct-push push machine
- Piezometer Riser – Polyvinyl chloride (PVC), Schedule 40, 0.75-inch flush-threaded riser

Piezometer Screen

0.75 in. ID x 1.4 in. OD Pre-packed Screen				
Casing ID / Slot Size	Sand Pack	Length	Push Rod Size OD	Push Rod Size ID
0.75 in. Sch.40 PVC 0.010 in. slots	20/40 mesh sand factory packed	12 in.	2.25 in.	1.5 in.

Piezometer Cap

- Above-grade completion: PVC, threaded or push-on type, vented
- Flush-mount completion: PVC, locking, leak-proof seal

Bentonite

- Pure, additive-free granulated bentonite

Protective Casing

- Above-grade completion: 4-inch minimum ID steel pipe with locking cover, diameter at least 2 inches greater than the piezometer riser, painted with epoxy paint for rust protection; heavy duty lock; protective posts if appropriate
- Flush-mount completion: Morrison 6-inch or 9-inch 519 manhole cover, or equivalent; rubber seal to prevent leakage; locking cover inside of road box

Piezometer Development

- Surge block
- Development pump and associated equipment
- Calibrated meters for measuring pH, temperature, and specific conductance of development water
- Containers (e.g., 55-gallon drums) for water produced from the piezometer.

Procedures and Guidelines

Field Set-up

1. Confirm that underground utilities are not present prior to beginning work.
2. Assemble equipment and check for proper operation
3. Decontaminate equipment

Piezometer Installation

Drive probe rods to depth with a Geoprobe® probing machine.

Lower well assembly into the probe rod string with threaded PVC riser pipe.

Once the well assembly is lowered to the bottom of the probe rod string, retract the probe rods to a point above the screen. Install a sand barrier directly above the well screen to

prevent grout from entering the screen. This barrier can be created either by natural formation collapse (occurring during the initial probe rod retraction) or by gravity installation of fine-grade sand through the rod annulus.

With the barrier in place, install granular bentonite or bentonite slurry in the annulus to form a well seal.

Surface Completion

For piezometers that will be completed above grade, a locking steel protective casing set in a concrete pad will be installed. The pad will slope to drain away water. Guard posts may be installed in high-traffic areas for additional protection.

For piezometers with flush-mount completions, Morrison 6-inch or 9-inch 519 manhole road box and cover, or equivalent, with a rubber-sealed cover and drain will be installed. The top of the manhole cover will be positioned approximately 1 inch above grade. A square concrete pad will be installed as a concrete collar surrounding the road box and will slope uniformly downward to the adjacent grade. The road box and installation thereof will be of sufficient strength to withstand normal vehicular traffic.

Each piezometer will be properly labeled on the exterior of the locking cap or protective casing with a metal stamp indicating the permanent piezometer number.

Piezometer Development

Piezometer development will be performed using combination of surging throughout the screen and bailing until the physical and chemical parameters of the discharge water that are measured in the field have stabilized and the turbidity of the discharge water is substantially reduced. Fine-grained materials in the surficial aquifer at the site may not allow low turbidity results to be achieved.

The surging apparatus will include a surge block. Development will begin by surging the screen, starting at the bottom of the screen and proceeding upwards, throughout the screened zone. Following surging, the piezometer will be pumped to remove the fine materials that have been drawn into the piezometer or well.

Specific conductance, pH, and temperature will be measured and recorded during bailing.

Development will continue by alternately surging and bailing until the discharge water is free from sand and silt, the turbidity is substantially reduced, and the pH, temperature, and specific conductance have stabilized. Development will continue for a minimum of 10 well volumes.

Decontamination

Piezometer installation and development equipment will be decontaminated before initial use and after the development of each piezometer. Decontamination procedures are detailed in SOP 6-24: *Decontamination of Sampling Equipment*.

Investigation Derived Waste Decontamination

Soil and water generated during piezometer installation and development will be contained and managed as detailed in Section 6.4 of the FSP.

Documentation

The field documentation requirements will include recording all observations made during field activities to document the work and potential issues that could affect the quality of field data. The documentation should be entered in a field logbook with consecutively numbered pages and/or the data collection forms. Documentation should include at a minimum:

- Work/sample location
- Date of field activity
- Personnel on-site
- Time of day
- PPE level
- Field methods and procedures
- Field readings and measurements
- Field observations and comments
- Unusual conditions
- Decontamination procedures
- Investigation derived waste procedures

Attachments

None.

STANDARD OPERATING PROCEDURE 6-17

Low-flow Groundwater Sampling

Purpose and Scope

This Standard Operating Procedure (SOP) provides the Equipment, Materials, Procedures, and Guidelines to collect groundwater samples from monitoring wells using low-flow purging and sampling procedures. The SOP follows the attached EPA standard procedure for low-flow sampling (EPA, 1996). Groundwater samples will be collected from existing shallow monitoring wells, new shallow monitoring wells, and new deeper monitoring wells within the Semiperched aquifer zone. These wells consist of the following:

Existing Shallow Wells (2-inch dia)	Existing Shallow Wells (0.75-inch dia)	New Shallow Wells (2-inch dia)	New Deeper Wells (2-inch dia)
MW-1R	MW-11	MW-20	MW-2C
MW-2RA	MW-12	MW-21	MW-2D
MW-2RB	MW-13	MW-22	MW-3C
MW-3RA	MW-14	MW-23	MW-3D
MW-3RB	MW-15	MW-24	MW-6C
MW-4RA	MW-16	MW-25	MW-6D
MW-4RB	MW-17	MW-26	MW-19C
MW-5	MW-18	MW-27	MW-19D
MW-6	MW-19		
9 Total	**9 Total**	**8 Total**	**8 Total**

The construction of the existing wells is documented in the following report: *Preliminary Evaluation of the Sources, Nature, Extent, and Movement of Contamination in Surface Water and Groundwater* (CH2M HILL, 2008). These wells consist of 2-inch and 0.75-inch diameter wells with variable length screens. The new shallow and deeper wells are planned to all be constructed with 2-inch diameter casing and 10-foot-long screens.

The monitoring well purging and groundwater sample collection may be performed by a subcontractor. The procedures in this SOP do not replace more detailed specifications developed or provided by the subcontractor. The subcontractor's procedures will be reviewed for consistency with this SOP before implementation of the work.

References

Field Sampling Plan		
Section	6.1.8	Task 8 – Groundwater Sampling
Table	5-5	Request for Analysis, Water Matrix Samples
Figure	A-8	Groundwater Monitoring Well Locations
Appendixes	B	GPS Coordinates for Sample Locations

Required Documents

1. Well construction logs and specifications
2. Previous water-level, purging, and sampling data
3. Blank sampling logs and field notebook

Equipment and Materials

- Flow-through cell with inlet and outlet ports for purged groundwater and watertight ports for each probe
- Meters to monitor pH, specific conductance, turbidity, DO, ORP, and temperature (e.g., QED MicroPurge® basics™ MP20 Flow Cell or similar)
- Water-level indicator
- Inline disposable 0.45-µm filters
- Adjustable-rate, positive-displacement pump or submersible pump
- Generator or battery
- Compressed gas cylinders or high-pressure air compressor and regulator, as needed
- Disposable polyethylene or Teflon® tubing
- Plastic sheeting
- Well construction information
- Calibrated bucket or other container and watch with second hand to determine flow rate
- Calculator
- Pre-cleaned sample containers and stainless-steel sampling implements
- Clean nitrile gloves
- Sample coolers and ice
- Log book

Procedures and Guidelines

Setup and Purging

1. Obtain information on well location, diameter(s), depth, and screened interval(s), and the method for disposal of purged water.
2. Calibrate instruments each day prior to sampling according to manufacturer's instructions.

3. Record the well number, site, date, and condition in the field logbook and on the field sampling form.

4. Place plastic sheeting on the ground and unblock and open the well. Place decontaminated equipment to be used in sampling only on the plastic sheeting until after the sampling has been completed. To avoid cross-contamination, do not let any downhole equipment touch the ground.

5. Clean and decontaminate sampling equipment and any other equipment to be placed in the well before sampling in accordance with SOP 6-24: *Decontamination of Sampling Equipment*.

6. Collect water-level measurements in accordance with SOP 6-19: *Water-level Measurements*. Do not measure the depth to the bottom of the well at this time unless it is unknown. This increases the possibility that any accumulated sediment in the well will be disturbed. Obtain depth to bottom information from the well installation log.

7. Determine the height of the water column and the volume of water in the well using the following relationship:

   Total Depth - Depth to Water = thickness of water column (1)

   Thickness of Water Column x <u>note below</u> = volume (2)

   Depth to Water + (Thickness of Water Column ÷ 2) = midpoint of saturated portion of well (3)

   Notes:

   - The volume of 2-inch well casing = 0.163 gallon per foot.
   - The volume of 4-inch well casing = 0.653 gallon per foot.
   - The volume of 6-inch well casing = 1.47 gallons per foot.
   - Multiply gallons by 3.785 to obtain liters per foot.

   If the depth to water is above the top of the screened interval, place the pump or tubing intake at the midpoint of the screen. If the depth to water is below the top of the screen, place the pump or tubing intake at the midpoint of the saturated interval of the screen.

8. Attach and secure the polyethylene tubing to the low-flow pump. Lower the pump slowly into the well and set it at approximately the middle of the screen, as determined above. Alternatively, if the formation is stratified, the pump or tubing intake should be placed within the interval of highest transmissivity, such as sand or silty sand. Place the pump intake at least 2 feet above the bottom of the well to avoid mobilization of any sediment present in the bottom.

9. Insert the measurement probes into the flow-through cell. Attach the tubing from the pump to the flow-through cell inlet. Attach the discharge tubing to discharge part of the flow-through cell. The purged groundwater is directed through the cell, allowing measurements to be collected before the water contacts the atmosphere.

10. Start purging the well at 0.1 to 0.5 liter per minute. Avoid surging. Purging rates for more transmissive formations could be started at 0.5 to 1 liter per minute. The initial

field parameters of pH, specific conductance, DO, ORP or Eh, turbidity, and temperature of water are measured and recorded in the field logbook and field data sheet for the well. The purge rate for the well should be measured immediately. To measure, time the filling of a 0.5-liter (16-ounce) measuring cup graduated in at least 50-ml increments. Divide the volume of water collected by time (in minutes) to establish the purge rate. Record the purge rate in the field logbook and field data sheet.

11. The water level should be monitored during purging either prior to or after each series of field parameter readings. Ideally, the purge rate should equal the well recharge rate so there is little or no drawdown in the well (i.e., less than 0.5 foot). The water level should stabilize for the specific purge rate. There should be at least 1 foot of water over the pump intake so there is no risk of the pump suction being broken or entrainment of air in the sample. Record adjustments in the purge rate and changes in depth to water in the logbook. Purge rates should, if needed, be decreased to the minimum capabilities of the pump (0.05 to 0.10 liter per minute) to avoid affecting well drawdown.

12. During purging, the field parameters are measured frequently (every 3 to 5 minutes) until the parameters have stabilized. The readings should not be taken at intervals less than the time required to fill the flow-through cell with less than one entire pass-through volume. The time interval for the readings will be based on the volume and purge rate. Field parameters are considered stabilized when measurements meet the following criteria:

    - pH within 0.1 pH units
    - Temperature within 1 degree Celsius
    - Electrical conductivity within 5 percent
    - Dissolved oxygen within 10 percent
    - Turbidity within 10 percent or as low as practicable given sampling conditions
    - ORP within 10 mV

Sample Collection

When purging has been completed, the well is ready to be sampled. The elapsed time between completion of purging and collection of the groundwater sample from the well should be minimized. Typically, the sample is collected immediately after it is determined the water quality parameters have stabilized, but this is dependent on well recovery.

Samples will be placed in bottles that are appropriate to the respective analysis. Typically, each bottle will have been previously prepared with the appropriate preservative, if necessary.

The following information, at a minimum, will be recorded in the field logbook prior to sample collection:

1. Sample identification (site name, location, and project number; sample name/number and location; sample type and matrix; whether the sample is filtered or not; time and date; sampler's identity).

2. Sample source and source description.

3. Field observations and measurements (appearance, volatile screening, field chemistry, sampling method), volume of water purged prior to sampling, number of well volumes purged, field parameter measurements, and the time of the last reading.
4. Sample disposition (preservatives added; date and time sent to laboratory; name of laboratory; laboratory sample number, chain-of-custody (COC) number, sample bottle lot number).
5. Number of sample containers.

The steps to be followed for sample collection are as follows:

1. Reduce the pumping rate to approximately 100 milliliters per minute when sampling volatile compounds.
2. Remove the cap from the sample bottle, and tilt the bottle slightly.
3. Collect samples for analysis for volatile compounds first, if such samples are required.
4. Discharge the sample from the pump so that it runs down the inside of the sample bottle with a minimum of splashing.
5. Samples may be field filtered before transfer to the sample bottle. Filtration must occur in the field immediately upon collection. Inorganics, including metals, are to be collected and preserved in the filtered form as well as the unfiltered form, if specified by the laboratory manager. The recommended method is to use a disposable inline filtration module (0.45-µm filter) using the pressure provided by the pumping device for its operation.
6. Cap the bottle, label it clearly, and carefully fill out the COC form, following the procedures in Section 6.2.3 of the FSP.
7. Place samples in appropriate containers and, if necessary, pack with ice in coolers as soon as practical.

Additional Remarks

1. If the well goes dry during purging, wait until it recovers sufficiently to remove the required volumes to sample all parameters. It might be necessary to return periodically to the well, but a particular sample (e.g., a large number of amber bottles for semivolatile analysis) should be filled at one time rather than over the course of two or more visits to the well.
2. It might not be possible to prevent drawdown in the well if the water-bearing unit has low permeability. Disregard any water level in the screen at the start, because there is no stagnant water in the riser above the screen.

   If the water level in the well is in the riser above the screen at the beginning of purging, pump out sufficient volume from the well to remove the water in the riser above the screen. For a 2-inch-diameter well, each foot of riser contains 0.163 gallon; for a 4-inch riser, each foot of riser contains 0.653 gallon; for a 6-inch riser, each foot of riser contains 1.47 gallons.

Alternatively, the water in the riser above the screen can be removed by lowering the pump into the well until the pump intake is just below the water level, starting the pump, running it at a low rate, and slowly lowering the pump as the water level in the riser declines. This approach can be terminated when the water level reaches the top of the screen, at which time the stagnant water in the riser has been removed. This might not be a practical approach for dedicated sampling equipment. As with typical low-flow sampling, the flow rate should be kept as low as practicable.

Decontamination

Sampling equipment will be decontaminated before initial use and after the temporary probes have been removed. Decontamination procedures are detailed in SOP 6-24: *Decontamination of Sampling Equipment*.

Investigation Derived Waste Decontamination

Water generated during sampling will be contained and managed as detailed in Section 6.4 of the FSP.

Key Checks and Preventive Maintenance

- Minimize the drawdown in the well as much as possible (preferably no more than 0.5 foot) so natural groundwater-flow conditions are maintained as closely as possible.
- The highest purging rate should not exceed 1 liter per minute.
- Avoid suspension of sediment in the well so that turbidity-containing adsorbed chemicals are not suspended in the well and taken in by the pump.
- Avoid overheating the pump to minimize the potential for losing volatile compounds.
- Keep the working space clean with plastic sheeting and practicing good housekeeping.
- Maintain field equipment in accordance with the manufacturer's recommendations. This will include, but is not limited to the following:
  - Inspecting sampling pump regularly and replace as warranted.
  - Inspecting quick-connects regularly and replace as warranted.
  - Verifying battery charge, calibration, and proper working order of field measurement equipment prior to initial mobilization and daily during field efforts.

Documentation

The field documentation requirements will include recording all observations made during field activities to document the work and potential issues that could affect the quality of field data. The documentation should be entered in a field logbook with consecutively numbered pages and/or the data collection forms. Documentation should include at a minimum:

- Work/sample location
- Date of field activity
- Personnel on-site
- Time of day
- PPE level
- Field methods and procedures
- Field readings and measurements
- Field observations and comments
- Unusual conditions

Attachments

U.S. Environmental Protection Agency (EPA). 1996. "Low-flow (Minimal Drawdown) Ground-water Sampling Procedures." *Ground Water Issue*. Prepared by Robert W. Puls and Michael J. Barcelona. EPA/540/S-95/504. April.

Attachment

United States Environmental Protection Agency | Office of Research and Development | Office of Solid Waste and Emergency Response | EPA/540/S-95/504 April 1996

Ground Water Issue

LOW-FLOW (MINIMAL DRAWDOWN) GROUND-WATER SAMPLING PROCEDURES

by Robert W. Puls[1] and Michael J. Barcelona[2]

Background

The Regional Superfund Ground Water Forum is a group of ground-water scientists, representing EPA's Regional Superfund Offices, organized to exchange information related to ground-water remediation at Superfund sites. One of the major concerns of the Forum is the sampling of ground water to support site assessment and remedial performance monitoring objectives. This paper is intended to provide background information on the development of low-flow sampling procedures and its application under a variety of hydrogeologic settings. It is hoped that the paper will support the production of standard operating procedures for use by EPA Regional personnel and other environmental professionals engaged in ground-water sampling.

For further information contact: Robert Puls, 405-436-8543, Subsurface Remediation and Protection Division, NRMRL, Ada, Oklahoma.

I. Introduction

The methods and objectives of ground-water sampling to assess water quality have evolved over time. Initially the emphasis was on the assessment of water quality of aquifers as sources of drinking water. Large water-bearing units were identified and sampled in keeping with that objective. These were highly productive aquifers that supplied drinking water via private wells or through public water supply systems. Gradually, with the increasing awareness of subsurface pollution of these water resources, the understanding of complex hydrogeochemical processes which govern the fate and transport of contaminants in the subsurface increased. This increase in understanding was also due to advances in a number of scientific disciplines and improvements in tools used for site characterization and ground-water sampling. Ground-water quality investigations where pollution was detected initially borrowed ideas, methods, and materials for site characterization from the water supply field and water analysis from public health practices. This included the materials and manner in which monitoring wells were installed and the way in which water was brought to the surface, treated, preserved and analyzed. The prevailing conceptual ideas included convenient generalizations of ground-water resources in terms of large and relatively homogeneous hydrologic *units*. With time it became apparent that conventional water supply generalizations of *homogeneity* did not adequately represent field data regarding pollution of these subsurface resources. The important role of *heterogeneity* became increasingly clear not only in geologic terms, but also in terms of complex physical,

[1]National Risk Management Research Laboratory, U.S. EPA
[2]University of Michigan

Superfund Technology Support Center for Ground Water

National Risk Management Research Laboratory
Subsurface Protection and Remediation Division
Robert S. Kerr Environmental Research Center
Ada, Oklahoma

Technology Innovation Office
Office of Solid Waste and Emergency Response, US EPA, Washington, DC

Walter W. Kovalick, Jr., Ph.D.
Director

chemical and biological subsurface processes. With greater appreciation of the role of heterogeneity, it became evident that subsurface pollution was ubiquitous and encompassed the unsaturated zone to the deep subsurface and included unconsolidated sediments, fractured rock, and *aquitards* or low-yielding or impermeable formations. Small-scale processes and heterogeneities were shown to be important in identifying contaminant distributions and in controlling water and contaminant flow paths.

It is beyond the scope of this paper to summarize all the advances in the field of ground-water quality investigations and remediation, but two particular issues have bearing on ground-water sampling today: aquifer heterogeneity and colloidal transport. Aquifer heterogeneities affect contaminant flow paths and include variations in geology, geochemistry, hydrology and microbiology. As methods and the tools available for subsurface investigations have become increasingly sophisticated and understanding of the subsurface environment has advanced, there is an awareness that in most cases a primary concern for site investigations is characterization of contaminant flow paths rather than entire aquifers. In fact, in many cases, plume thickness can be less than well screen lengths (e.g., 3-6 m) typically installed at hazardous waste sites to detect and monitor plume movement over time. Small-scale differences have increasingly been shown to be important and there is a general trend toward smaller diameter wells and shorter screens.

The hydrogeochemical significance of colloidal-size particles in subsurface systems has been realized during the past several years (Gschwend and Reynolds, 1987; McCarthy and Zachara, 1989; Puls, 1990; Ryan and Gschwend, 1990). This realization resulted from both field and laboratory studies that showed faster contaminant migration over greater distances and at higher concentrations than flow and transport model predictions would suggest (Buddemeier and Hunt, 1988; Enfield and Bengtsson, 1988; Penrose et al., 1990). Such models typically account for interaction between the mobile aqueous and immobile solid phases, but do not allow for a mobile, reactive solid phase. It is recognition of this third *phase* as a possible means of contaminant transport that has brought increasing attention to the manner in which samples are collected and processed for analysis (Puls et al., 1990; McCarthy and Degueldre, 1993; Backhus et al., 1993; U. S. EPA, 1995). If such a phase is present in sufficient mass, possesses high sorption reactivity, large surface area, and remains stable in suspension, it can serve as an important mechanism to facilitate contaminant transport in many types of subsurface systems.

Colloids are particles that are sufficiently small so that the surface free energy of the particle dominates the bulk free energy. Typically, in ground water, this includes particles with diameters between 1 and 1000 nm. The most commonly observed mobile particles include: secondary clay minerals; hydrous iron, aluminum, and manganese oxides; dissolved and particulate organic materials, and viruses and bacteria. These reactive particles have been shown to be mobile under a variety of conditions in both field studies and laboratory column experiments, and as such need to be included in monitoring programs where identification of the *total* mobile contaminant loading (dissolved + naturally suspended particles) at a site is an objective. To that end, sampling methodologies must be used which do not artificially bias *naturally* suspended particle concentrations.

Currently the most common ground-water purging and sampling methodology is to purge a well using bailers or high speed pumps to remove 3 to 5 casing volumes followed by sample collection. This method can cause adverse impacts on sample quality through collection of samples with high levels of turbidity. This results in the inclusion of otherwise immobile artifactual particles which produce an overestimation of certain analytes of interest (e.g., metals or hydrophobic organic compounds). Numerous documented problems associated with filtration (Danielsson, 1982; Laxen and Chandler, 1982; Horowitz et al., 1992) make this an undesirable method of rectifying the turbidity problem, and include the removal of potentially mobile (contaminant-associated) particles during filtration, thus artificially biasing contaminant concentrations low. Sampling-induced turbidity problems can often be mitigated by using low-flow purging and sampling techniques.

Current subsurface conceptual models have undergone considerable refinement due to the recent development and increased use of field screening tools. So-called hydraulic *push* technologies (e.g., cone penetrometer, Geoprobe®, QED HydroPunch®) enable relatively fast screening site characterization which can then be used to design and install a monitoring well network. Indeed, alternatives to conventional monitoring wells are now being considered for some hydrogeologic settings. The ultimate design of any monitoring system should however be based upon adequate site characterization and be consistent with established monitoring objectives.

If the sampling program objectives include accurate assessment of the magnitude and extent of subsurface contamination over time and/or accurate assessment of subsequent remedial performance, then some information regarding plume delineation in three-dimensional space is necessary prior to monitoring well network design and installation. This can be accomplished with a variety of different tools and equipment ranging from hand-operated augers to screening tools mentioned above and large drilling rigs. Detailed information on ground-water flow velocity, direction, and horizontal and vertical variability are essential baseline data requirements. Detailed soil and geologic data are required prior to and during the installation of sampling points. This includes historical as well as detailed soil and geologic logs which accumulate during the site investigation. The use of borehole geophysical techniques is also recommended. With this information (together with other site characterization data) and a clear understanding of sampling

objectives, then appropriate location, screen length, well diameter, slot size, etc. for the monitoring well network can be decided. This is especially critical for new in situ remedial approaches or natural attenuation assessments at hazardous waste sites.

In general, the overall goal of any ground-water sampling program is to collect water samples with no alteration in water chemistry; analytical data thus obtained may be used for a variety of specific monitoring programs depending on the regulatory requirements. The sampling methodology described in this paper assumes that the monitoring goal is to sample monitoring wells for the presence of contaminants and it is applicable whether mobile colloids are a concern or not and whether the analytes of concern are metals (and metalloids) or organic compounds.

II. Monitoring Objectives and Design Considerations

The following issues are important to consider prior to the design and implementation of any ground-water monitoring program, including those which anticipate using low-flow purging and sampling procedures.

A. Data Quality Objectives (DQOs)

Monitoring objectives include four main types: detection, assessment, corrective-action evaluation and resource evaluation, along with *hybrid* variations such as site-assessments for property transfers and water availability investigations. Monitoring objectives may change as contamination or water quality problems are discovered. However, there are a number of common components of monitoring programs which should be recognized as important regardless of initial objectives. These components include:

1) Development of a conceptual model that incorporates elements of the regional geology to the local geologic framework. The conceptual model development also includes initial site characterization efforts to identify hydrostratigraphic units and likely flow-paths using a minimum number of borings and well completions;

2) Cost-effective and well documented collection of high quality data utilizing simple, accurate, and reproducible techniques; and

3) Refinement of the conceptual model based on supplementary data collection and analysis.

These fundamental components serve many types of monitoring programs and provide a basis for future efforts that evolve in complexity and level of spatial detail as purposes and objectives expand. High quality, reproducible data collection is a common goal regardless of program objectives.

High quality data collection implies data of sufficient accuracy, precision, and completeness (i.e., ratio of valid analytical results to the minimum sample number called for by the program design) to meet the program objectives. Accuracy depends on the correct choice of monitoring tools and procedures to minimize sample and subsurface disturbance from collection to analysis. Precision depends on the repeatability of sampling and analytical protocols. It can be assured or improved by replication of sample analyses including blanks, field/lab standards and reference standards.

B. Sample Representativeness

An important goal of any monitoring program is collection of data that is truly representative of conditions at the site. The term *representativeness* applies to chemical and hydrogeologic data collected via wells, borings, piezometers, geophysical and soil gas measurements, lysimeters, and temporary sampling points. It involves a recognition of the statistical variability of individual subsurface physical properties, and contaminant or major ion concentration levels, while explaining extreme values. Subsurface temporal and spatial variability are facts. Good professional practice seeks to maximize representativeness by using proven accurate and reproducible techniques to define limits on the distribution of measurements collected at a site. However, measures of representativeness are dynamic and are controlled by evolving site characterization and monitoring objectives. An evolutionary site characterization model, as shown in Figure 1, provides a systematic approach to the goal of consistent data collection.

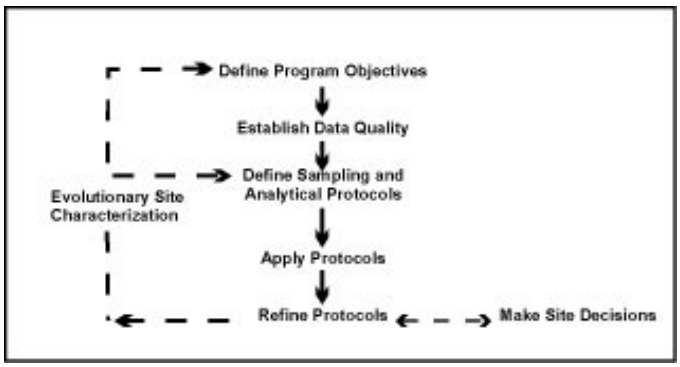

Figure 1. Evolutionary Site Characterization Model

The model emphasizes a recognition of the causes of the variability (e.g., use of inappropriate technology such as using bailers to purge wells; imprecise or operator-dependent methods) and the need to control avoidable errors.

1) Questions of Scale

A sampling plan designed to collect representative samples must take into account the potential scale of changes in site conditions through space and time as well as the chemical associations and behavior of the parameters that are targeted for investigation. In subsurface systems, physical (i.e., aquifer) and chemical properties over time or space are not statistically independent. In fact, samples taken in close proximity (i.e., within distances of a few meters) or within short time periods (i.e., more frequently than monthly) are highly auto-correlated. This means that designs employing high-sampling frequency (e.g., monthly) or dense spatial monitoring designs run the risk of redundant data collection and misleading inferences regarding trends in values that aren't statistically valid. In practice, contaminant detection and assessment monitoring programs rarely suffer these *over-sampling* concerns. In corrective-action evaluation programs, it is also possible that too little data may be collected over space or time. In these cases, false interpretation of the spatial extent of contamination or underestimation of temporal concentration variability may result.

2) Target Parameters

Parameter selection in monitoring program design is most often dictated by the regulatory status of the site. However, background water quality constituents, purging indicator parameters, and contaminants, all represent targets for data collection programs. The tools and procedures used in these programs should be equally rigorous and applicable to all categories of data, since all may be needed to determine or support regulatory action.

C. Sampling Point Design and Construction

Detailed site characterization is central to all decision-making purposes and the basis for this characterization resides in identification of the geologic framework and major hydro-stratigraphic units. Fundamental data for sample point location include: subsurface lithology, head-differences and background geochemical conditions. Each sampling point has a proper use or uses which should be documented at a level which is appropriate for the program's data quality objectives. Individual sampling points may not always be able to fulfill multiple monitoring objectives (e.g., detection, assessment, corrective action).

1) Compatibility with Monitoring Program and Data Quality Objectives

Specifics of sampling point location and design will be dictated by the complexity of subsurface lithology and variability in contaminant and/or geochemical conditions. It should be noted that, regardless of the ground-water sampling approach, few sampling points (e.g., wells, drive-points, screened augers) have zones of influence in excess of a few feet. Therefore, the spatial frequency of sampling points should be carefully selected and designed.

2) Flexibility of Sampling Point Design

In most cases *well-point* diameters in excess of 1 7/8 inches will permit the use of most types of submersible pumping devices for low-flow (minimal drawdown) sampling. It is suggested that *short* (e.g., less than 1.6 m) screens be incorporated into the monitoring design where possible so that comparable results from one device to another might be expected. *Short*, of course, is relative to the degree of vertical water quality variability expected at a site.

3) Equilibration of Sampling Point

Time should be allowed for equilibration of the well or sampling point with the formation after installation. Placement of well or sampling points in the subsurface produces some disturbance of ambient conditions. Drilling techniques (e.g., auger, rotary, etc.) are generally considered to cause more disturbance than *direct-push* technologies. In either case, there may be a period (i.e., days to months) during which water quality near the point may be distinctly different from that in the formation. Proper development of the sampling point and adjacent formation to remove fines created during emplacement will shorten this water quality *recovery* period.

III. Definition of Low-Flow Purging and Sampling

It is generally accepted that water in the well casing is non-representative of the formation water and needs to be purged prior to collection of ground-water samples. However, the water in the screened interval may indeed be representative of the formation, depending upon well construction and site hydrogeology. Wells are purged to some extent for the following reasons: the presence of the air interface at the top of the water column resulting in an oxygen concentration gradient with depth, loss of volatiles up the water column, leaching from or sorption to the casing or filter pack, chemical changes due to clay seals or backfill, and surface infiltration.

Low-flow purging, whether using portable or dedicated systems, should be done using pump-intake located in the middle or slightly above the middle of the screened interval. Placement of the pump too close to the bottom of the well will cause increased entrainment of solids which have collected in the well over time. These particles are present as a result of well development, prior purging and sampling events, and natural colloidal transport and deposition. Therefore, placement of the pump in the middle or toward the top of the screened interval is suggested. Placement of the pump at the top of the water column for sampling is only recommended in unconfined aquifers, screened across the water table, where this is the desired sampling point. Low-

flow purging has the advantage of minimizing mixing between the overlying stagnant casing water and water within the screened interval.

A. Low-Flow Purging and Sampling

Low-flow refers to the velocity with which water enters the pump intake and that is imparted to the formation pore water in the immediate vicinity of the well screen. It does not necessarily refer to the flow rate of water discharged at the surface which can be affected by flow regulators or restrictions. Water level drawdown provides the best indication of the stress imparted by a given flow-rate for a given hydrological situation. The objective is to pump in a manner that minimizes stress (drawdown) to the system to the extent practical taking into account established site sampling objectives. Typically, flow rates on the order of 0.1 - 0.5 L/min are used, however this is dependent on site-specific hydrogeology. Some extremely coarse-textured formations have been successfully sampled in this manner at flow rates to 1 L/min. The effectiveness of using low-flow purging is intimately linked with proper screen location, screen length, and well construction and development techniques. The reestablishment of natural flow paths in both the vertical and horizontal directions is important for correct interpretation of the data. For high resolution sampling needs, screens less than 1 m should be used. Most of the need for purging has been found to be due to passing the sampling device through the overlying casing water which causes mixing of these stagnant waters and the dynamic waters within the screened interval. Additionally, there is disturbance to suspended sediment collected in the bottom of the casing and the displacement of water out into the formation immediately adjacent to the well screen. These disturbances and impacts can be avoided using dedicated sampling equipment, which precludes the need to insert the sampling device prior to purging and sampling.

Isolation of the screened interval water from the overlying stagnant casing water may be accomplished using low-flow minimal drawdown techniques. If the pump intake is located within the screened interval, most of the water pumped will be drawn in directly from the formation with little mixing of casing water or disturbance to the sampling zone. However, if the wells are not constructed and developed properly, zones other than those intended may be sampled. At some sites where geologic heterogeneities are sufficiently different within the screened interval, higher conductivity zones may be preferentially sampled. This is another reason to use shorter screened intervals, especially where high spatial resolution is a sampling objective.

B. Water Quality Indicator Parameters

It is recommended that water quality indicator parameters be used to determine purging needs prior to sample collection in each well. Stabilization of parameters such as pH, specific conductance, dissolved oxygen, oxidation-reduction potential, temperature and turbidity should be used to determine when formation water is accessed during purging. In general, the order of stabilization is pH, temperature, and specific conductance, followed by oxidation-reduction potential, dissolved oxygen and turbidity. Temperature and pH, while commonly used as purging indicators, are actually quite insensitive in distinguishing between formation water and stagnant casing water; nevertheless, these are important parameters for data interpretation purposes and should also be measured. Performance criteria for determination of stabilization should be based on water-level drawdown, pumping rate and equipment specifications for measuring indicator parameters. Instruments are available which utilize in-line flow cells to continuously measure the above parameters.

It is important to establish specific well stabilization criteria and then consistently follow the same methods thereafter, particularly with respect to drawdown, flow rate and sampling device. Generally, the time or purge volume required for parameter stabilization is independent of well depth or well volumes. Dependent variables are well diameter, sampling device, hydrogeochemistry, pump flow rate, and whether the devices are used in a portable or dedicated manner. If the sampling device is already in place (i.e., dedicated sampling systems), then the time and purge volume needed for stabilization is much shorter. Other advantages of dedicated equipment include less purge water for waste disposal, much less decontamination of equipment, less time spent in preparation of sampling as well as time in the field, and more consistency in the sampling approach which probably will translate into less variability in sampling results. The use of dedicated equipment is strongly recommended at wells which will undergo routine sampling over time.

If parameter stabilization criteria are too stringent, then minor oscillations in indicator parameters may cause purging operations to become unnecessarily protracted. It should also be noted that turbidity is a very conservative parameter in terms of stabilization. Turbidity is always the last parameter to stabilize. Excessive purge times are invariably related to the establishment of too stringent turbidity stabilization criteria. It should be noted that natural turbidity levels in ground water may exceed 10 nephelometric turbidity units (NTU).

C. Advantages and Disadvantages of Low-Flow (Minimum Drawdown) Purging

In general, the advantages of low-flow purging include:

- samples which are representative of the *mobile* load of contaminants present (dissolved and colloid-associated);
- minimal disturbance of the sampling point thereby minimizing sampling artifacts;
- less operator variability, greater operator control;

- reduced stress on the formation (minimal drawdown);
- less mixing of stagnant casing water with formation water;
- reduced need for filtration and, therefore, less time required for sampling;
- smaller purging volume which decreases waste disposal costs and sampling time;
- better sample consistency; reduced artificial sample variability.

Some disadvantages of low-flow purging are:

- higher initial capital costs,
- greater set-up time in the field,
- need to transport additional equipment to and from the site,
- increased training needs,
- resistance to change on the part of sampling practitioners,
- concern that new data will indicate a *change in conditions* and trigger an *action*.

IV. Low-Flow (Minimal Drawdown) Sampling Protocols

The following ground-water sampling procedure has evolved over many years of experience in ground-water sampling for organic and inorganic compound determinations and as such summarizes the authors' (and others) experiences to date (Barcelona et al., 1984, 1994; Barcelona and Helfrich, 1986; Puls and Barcelona, 1989; Puls et. al. 1990, 1992; Puls and Powell, 1992; Puls and Paul, 1995). High-quality chemical data collection is essential in ground-water monitoring and site characterization. The primary limitations to the collection of *representative* ground-water samples include: mixing of the stagnant casing and *fresh* screen waters during insertion of the sampling device or ground-water level measurement device; disturbance and resuspension of settled solids at the bottom of the well when using high pumping rates or raising and lowering a pump or bailer; introduction of atmospheric gases or degassing from the water during sample handling and transfer, or inappropriate use of vacuum sampling device, etc.

A. Sampling Recommendations

Water samples should not be taken immediately following well development. Sufficient time should be allowed for the ground-water flow regime in the vicinity of the monitoring well to stabilize and to approach chemical equilibrium with the well construction materials. This lag time will depend on site conditions and methods of installation but often exceeds one week.

Well purging is nearly always necessary to obtain samples of water flowing through the geologic formations in the screened interval. Rather than using a general but arbitrary guideline of purging three casing volumes prior to sampling, it is recommended that an in-line water quality measurement device (e.g., flow-through cell) be used to establish the stabilization time for several parameters (e.g. , pH, specific conductance, redox, dissolved oxygen, turbidity) on a well-specific basis. Data on pumping rate, drawdown, and volume required for parameter stabilization can be used as a guide for conducting subsequent sampling activities.

The following are recommendations to be considered before, during and after sampling:

- use low-flow rates (<0.5 L/min), during both purging and sampling to maintain minimal drawdown in the well;
- maximize tubing wall thickness, minimize tubing length;
- place the sampling device intake at the desired sampling point;
- minimize disturbances of the stagnant water column above the screened interval during water level measurement and sampling device insertion;
- make proper adjustments to stabilize the flow rate as soon as possible;
- monitor water quality indicators during purging;
- collect unfiltered samples to estimate contaminant loading and transport potential in the subsurface system.

B. Equipment Calibration

Prior to sampling, all sampling device and monitoring equipment should be calibrated according to manufacturer's recommendations and the site Quality Assurance Project Plan (QAPP) and Field Sampling Plan (FSP). Calibration of pH should be performed with at least two buffers which bracket the expected range. Dissolved oxygen calibration must be corrected for local barometric pressure readings and elevation.

C. Water Level Measurement and Monitoring

It is recommended that a device be used which will least disturb the water surface in the casing. Well depth should be obtained from the well logs. Measuring to the bottom of the well casing will only cause resuspension of settled solids from the formation and require longer purging times for turbidity equilibration. Measure well depth after sampling is completed. The water level measurement should be taken from a permanent reference point which is surveyed relative to ground elevation.

D. Pump Type

The use of low-flow (e.g., 0.1-0.5 L/min) pumps is suggested for purging and sampling all types of analytes. All pumps have some limitation and these should be investigated with respect to application at a particular site. Bailers are inappropriate devices for low-flow sampling.

1) General Considerations

There are no unusual requirements for ground-water sampling devices when using low-flow, minimal drawdown techniques. The major concern is that the device give consistent results and minimal disturbance of the sample across a range of *low* flow rates (i.e., < 0.5 L/min). Clearly, pumping rates that cause minimal to no drawdown in one well could easily cause *significant* drawdown in another well finished in a less transmissive formation. In this sense, the pump should not cause undue pressure or temperature changes or physical disturbance on the water sample over a reasonable sampling range. Consistency in operation is critical to meet accuracy and precision goals.

2) Advantages and Disadvantages of Sampling Devices

A variety of sampling devices are available for low-flow (minimal drawdown) purging and sampling and include peristaltic pumps, bladder pumps, electrical submersible pumps, and gas-driven pumps. Devices which lend themselves to both dedication and consistent operation at definable low-flow rates are preferred. It is desirable that the pump be easily adjustable and operate reliably at these lower flow rates. The peristaltic pump is limited to shallow applications and can cause degassing resulting in alteration of pH, alkalinity, and some volatiles loss. Gas-driven pumps should be of a type that does not allow the gas to be in direct contact with the sampled fluid.

Clearly, bailers and other *grab* type samplers are ill-suited for low-flow sampling since they will cause repeated disturbance and mixing of *stagnant* water in the casing and the *dynamic* water in the screened interval. Similarly, the use of inertial lift foot-valve type samplers may cause too much disturbance at the point of sampling. Use of these devices also tends to introduce uncontrolled and unacceptable operator variability.

Summaries of advantages and disadvantages of various sampling devices are listed in Herzog et al. (1991), U. S. EPA (1992), Parker (1994) and Thurnblad (1994).

E. Pump Installation

Dedicated sampling devices (left in the well) capable of pumping and sampling are preferred over <u>any</u> other type of device. Any portable sampling device should be slowly and carefully lowered to the middle of the screened interval or slightly above the middle (e.g., 1-1.5 m below the top of a 3 m screen). This is to minimize excessive mixing of the stagnant water in the casing above the screen with the screened interval zone water, and to minimize resuspension of solids which will have collected at the bottom of the well. These two disturbance effects have been shown to directly affect the time required for purging. There also appears to be a direct correlation between size of portable sampling devices relative to the well bore and resulting purge volumes and times. The key is to minimize disturbance of water and solids in the well casing.

F. Filtration

Decisions to filter samples should be dictated by sampling objectives rather than as a *fix* for poor sampling practices, and field-filtering of certain constituents should not be the default. Consideration should be given as to what the application of field-filtration is trying to accomplish. For assessment of truly dissolved (as opposed to operationally *dissolved* [i.e., samples filtered with 0.45 µm filters]) concentrations of major ions and trace metals, 0.1 µm filters are recommended although 0.45 µm filters are normally used for most regulatory programs. Alkalinity samples must also be filtered if significant particulate calcium carbonate is suspected, since this material is likely to impact alkalinity titration results (although filtration itself may alter the CO_2 composition of the sample and, therefore, affect the results).

Although filtration may be appropriate, filtration of a sample may cause a number of unintended changes to occur (e.g. oxidation, aeration) possibly leading to filtration-induced artifacts during sample analysis and uncertainty in the results. Some of these unintended changes may be unavoidable but the factors leading to them must be recognized. Deleterious effects can be minimized by consistent application of certain filtration guidelines. Guidelines should address selection of filter type, media, pore size, etc. in order to identify and minimize potential sources of uncertainty when filtering samples.

In-line filtration is recommended because it provides better consistency through less sample handling, and minimizes sample exposure to the atmosphere. In-line filters are available in both disposable (barrel filters) and non-disposable (in-line filter holder, flat membrane filters) formats and various filter pore sizes (0.1-5.0 µm). Disposable filter cartridges have the advantage of greater sediment handling capacity when compared to traditional membrane filters. Filters must be pre-rinsed following manufacturer's recommendations. If there are no recommendations for rinsing, pass through a minimum of 1 L of ground water following purging and prior to sampling. Once filtration has begun, a filter cake may develop as particles larger than the pore size accumulate on the filter membrane. The result is that the effective pore diameter of the membrane is reduced and particles smaller than the stated pore size are excluded from the filtrate. Possible corrective measures include prefiltering (with larger pore size filters), minimizing particle loads to begin with, and reducing sample volume.

G. Monitoring of Water Level and Water Quality Indicator Parameters

Check water level periodically to monitor drawdown in the well as a guide to flow rate adjustment. The goal is minimal drawdown (<0.1 m) during purging. This goal may be difficult to achieve under some circumstances due to geologic heterogeneities within the screened interval, and may require adjustment based on site-specific conditions and personal experience. In-line water quality indicator parameters should be continuously monitored during purging. The water quality

indicator parameters monitored can include pH, redox potential, conductivity, dissolved oxygen (DO) and turbidity. The last three parameters are often most sensitive. Pumping rate, drawdown, and the time or volume required to obtain stabilization of parameter readings can be used as a future guide to purge the well. Measurements should be taken every three to five minutes if the above suggested rates are used. Stabilization is achieved after all parameters have stabilized for three successive readings. In lieu of measuring all five parameters, a minimum subset would include pH, conductivity, and turbidity or DO. Three successive readings should be within ± 0.1 for pH, ± 3% for conductivity, ± 10 mv for redox potential, and ± 10% for turbidity and DO. Stabilized purge indicator parameter trends are generally obvious and follow either an exponential or asymptotic change to stable values during purging. Dissolved oxygen and turbidity usually require the longest time for stabilization. The above stabilization guidelines are provided for rough estimates based on experience.

H. Sampling, Sample Containers, Preservation and Decontamination

Upon parameter stabilization, sampling can be initiated. If an in-line device is used to monitor water quality parameters, it should be disconnected or bypassed during sample collection. Sampling flow rate may remain at established purge rate or may be adjusted slightly to minimize aeration, bubble formation, turbulent filling of sample bottles, or loss of volatiles due to extended residence time in tubing. Typically, flow rates less than 0.5 L/min are appropriate. The same device should be used for sampling as was used for purging. Sampling should occur in a progression from least to most contaminated well, if this is known. Generally, volatile (e.g., solvents and fuel constituents) and gas sensitive (e.g., Fe^{2+}, CH_4, H_2S/HS^-, alkalinity) parameters should be sampled first. The sequence in which samples for most inorganic parameters are collected is immaterial unless filtered (dissolved) samples are desired. Filtering should be done last and in-line filters should be used as discussed above. During both well purging and sampling, proper protective clothing and equipment must be used based upon the type and level of contaminants present.

The appropriate sample container will be prepared in advance of actual sample collection for the analytes of interest and include sample preservative where necessary. Water samples should be collected directly into this container from the pump tubing.

Immediately after a sample bottle has been filled, it must be preserved as specified in the site (QAPP). Sample preservation requirements are based on the analyses being performed (use site QAPP, FSP, RCRA guidance document [U. S. EPA, 1992] or EPA SW-846 [U. S. EPA, 1982]). It may be advisable to add preservatives to sample bottles in a controlled setting prior to entering the field in order to reduce the chances of improperly preserving sample bottles or introducing field contaminants into a sample bottle while adding the preservatives.

The preservatives should be transferred from the chemical bottle to the sample container using a disposable polyethylene pipet and the disposable pipet should be used only once and then discarded.

After a sample container has been filled with ground water, a Teflon™ (or tin)-lined cap is screwed on tightly to prevent the container from leaking. A sample label is filled out as specified in the FSP. The samples should be stored inverted at 4°C.

Specific decontamination protocols for sampling devices are dependent to some extent on the type of device used and the type of contaminants encountered. Refer to the site QAPP and FSP for specific requirements.

I. Blanks

The following blanks should be collected:

(1) field blank: one field blank should be collected from each source water (distilled/deionized water) used for sampling equipment decontamination or for assisting well development procedures.

(2) equipment blank: one equipment blank should be taken prior to the commencement of field work, from each set of sampling equipment to be used for that day. Refer to site QAPP or FSP for specific requirements.

(3) trip blank: a trip blank is required to accompany each volatile sample shipment. These blanks are prepared in the laboratory by filling a 40-mL volatile organic analysis (VOA) bottle with distilled/deionized water.

V. Low-Permeability Formations and Fractured Rock

The overall sampling program goals or sampling objectives will drive how the sampling points are located, installed, and choice of sampling device. Likewise, site-specific hydrogeologic factors will affect these decisions. Sites with very low permeability formations or fractures causing discrete flow channels may require a unique monitoring approach. Unlike water supply wells, wells installed for ground-water quality assessment and restoration programs are often installed in low water-yielding settings (e.g., clays, silts). Alternative types of sampling points and sampling methods are often needed in these types of environments, because low-permeability settings may require extremely low-flow purging (<0.1 L/min) and may be technology-limited. Where devices are not readily available to pump at such low flow rates, the primary consideration is to avoid dewatering of

the well screen. This may require repeated recovery of the water during purging while leaving the pump in place within the well screen.

Use of low-flow techniques may be impractical in these settings, depending upon the water recharge rates. The sampler and the end-user of data collected from such wells need to understand the limitations of the data collected; i.e., a strong potential for underestimation of actual contaminant concentrations for volatile organics, potential false negatives for filtered metals and potential false positives for unfiltered metals. It is suggested that comparisons be made between samples recovered using low-flow purging techniques and samples recovered using passive sampling techniques (i.e., two sets of samples). Passive sample collection would essentially entail acquisition of the sample with no or very little purging using a dedicated sampling system installed within the screened interval or a passive sample collection device.

A. Low-Permeability Formations (<0.1 L/min recharge)

1. Low-Flow Purging and Sampling with Pumps

a. "portable or non-dedicated mode" - Lower the pump (one capable of pumping at <0.1 L/min) to mid-screen or slightly above and set in place for minimum of 48 hours (to lessen purge volume requirements). After 48 hours, use procedures listed in Part IV above regarding monitoring water quality parameters for stabilization, etc., but do not dewater the screen. If excessive drawdown and slow recovery is a problem, then alternate approaches such as those listed below may be better.

b. "dedicated mode" - Set the pump as above at least a week prior to sampling; that is, operate in a dedicated pump mode. With this approach significant reductions in purge volume should be realized. Water quality parameters should stabilize quite rapidly due to less disturbance of the sampling zone.

2. Passive Sample Collection

Passive sampling collection requires insertion of the device into the screened interval for a sufficient time period to allow flow and sample equilibration before extraction for analysis. Conceptually, the extraction of water from low yielding formations seems more akin to the collection of water from the unsaturated zone and passive sampling techniques may be more appropriate in terms of obtaining "representative" samples. Satisfying usual sample volume requirements is typically a problem with this approach and some latitude will be needed on the part of regulatory entities to achieve sampling objectives.

B. Fractured Rock

In fractured rock formations, a low-flow to zero purging approach using pumps in conjunction with packers to isolate the sampling zone in the borehole is suggested. Passive multi-layer sampling devices may also provide the most "representative" samples. It is imperative in these settings to identify flow paths or water-producing fractures prior to sampling using tools such as borehole flowmeters and/or other geophysical tools.

After identification of water-bearing fractures, install packer(s) and pump assembly for sample collection using low-flow sampling in "dedicated mode" or use a passive sampling device which can isolate the identified water-bearing fractures.

VI. Documentation

The usual practices for documenting the sampling event should be used for low-flow purging and sampling techniques. This should include, at a minimum: information on the conduct of purging operations (flow-rate, drawdown, water-quality parameter values, volumes extracted and times for measurements), field instrument calibration data, water sampling forms and chain of custody forms. See Figures 2 and 3 and "Ground Water Sampling Workshop -- A Workshop Summary" (U. S. EPA, 1995) for example forms and other documentation suggestions and information. This information coupled with laboratory analytical data and validation data are needed to judge the "useability" of the sampling data.

VII. Notice

The U.S. Environmental Protection Agency through its Office of Research and Development funded and managed the research described herein as part of its in-house research program and under Contract No. 68-C4-0031 to Dynamac Corporation. It has been subjected to the Agency's peer and administrative review and has been approved for publication as an EPA document. Mention of trade names or commercial products does not constitute endorsement or recommendation for use.

VIII. References

Backhus, D,A., J.N. Ryan, D.M. Groher, J.K. McFarlane, and P.M. Gschwend. 1993. Sampling Colloids and Colloid-Associated Contaminants in Ground Water. *Ground Water*, 31(3):466-479.

Barcelona, M.J., J.A. Helfrich, E.E. Garske, and J.P. Gibb. 1984. A laboratory evaluation of groundwater sampling mechanisms. *Ground Water Monitoring Review*, 4(2):32-41.

Barcelona, M.J. and J.A. Helfrich. 1986. Well construction and purging effects on ground-water samples. *Environ. Sci. Technol.,* 20(11):1179-1184.

Barcelona, M.J., H.A. Wehrmann, and M.D. Varljen. 1994. Reproducible well purging procedures and VOC stabilization criteria for ground-water sampling. *Ground Water*, 32(1):12-22.

Buddemeier, R.W. and J.R. Hunt. 1988. Transport of Colloidal Contaminants in Ground Water: Radionuclide Migration at the Nevada Test Site. *Applied Geochemistry*, 3: 535-548.

Danielsson, L.G. 1982. On the Use of Filters for Distinguishing Between Dissolved and Particulate Fractions in Natural Waters. *Water Research*, 16:179.

Enfield, C.G. and G. Bengtsson. 1988. Macromolecular Transport of Hydrophobic Contaminants in Aqueous Environments. *Ground Water,* 26(1): 64-70.

Gschwend, P.M. and M.D. Reynolds. 1987. Monodisperse Ferrous Phosphate Colloids in an Anoxic Groundwater Plume, *J. of Contaminant Hydrol.,* 1: 309-327.

Herzog, B., J. Pennino, and G. Nielsen. 1991. Ground-Water Sampling. In **Practical Handbook of Ground-Water Monitoring** (D.M. Nielsen, ed.). Lewis Publ., Chelsea, MI, pp. 449-499.

Horowitz, A.J., K.A. Elrick, and M.R. Colberg. 1992. The effect of membrane filtration artifacts on dissolved trace element concentrations. *Water Res.,* 26(6):753-763.

Laxen, D.P.H. and I.M. Chandler. 1982. Comparison of Filtration Techniques for Size Distribution in Freshwaters. *Analytical Chemistry*, 54(8):1350.

McCarthy, J.F. and J.M. Zachara. 1989. Subsurface Transport of Contaminants, *Environ. Sci. Technol.*, 5(23):496-502.

McCarthy, J.F. and C. Degueldre. 1993. Sampling and Characterization of Colloids and Ground Water for Studying Their Role in Contaminant Transport. In: Environmental Particles (J. Buffle and H.P. van Leeuwen, eds.), Lewis Publ., Chelsea, MI, pp. 247-315.

Parker, L.V. 1994. The Effects of Ground Water Sampling Devices on Water Quality: A Literature Review. *Ground Water Monitoring and Remediation*, 14(2):130-141.

Penrose, W.R., W.L. Polzer, E.H. Essington, D.M. Nelson, and K.A. Orlandini. 1990. Mobility of Plutonium and Americium through a Shallow Aquifer in a Semiarid Region, *Environ. Sci. Technol.*, 24:228-234.

Puls, R.W. and M.J. Barcelona. 1989. Filtration of Ground Water Samples for Metals Analyses. *Hazardous Waste and Hazardous Materials,* 6(4):385-393.

Puls, R.W., J.H. Eychaner, and R.M. Powell. 1990. Colloidal-Facilitated Transport of Inorganic Contaminants in Ground Water: Part I. Sampling Considerations. EPA/600/M-90/023, NTIS PB 91-168419.

Puls, R.W. 1990. Colloidal Considerations in Groundwater Sampling and Contaminant Transport Predictions. *Nuclear Safety*, 31(1):58-65.

Puls, R.W. and R.M. Powell. 1992. Acquisition of Representative Ground Water Quality Samples for Metals. *Ground Water Monitoring Review,* 12(3):167-176.

Puls, R.W., D.A. Clark, B.Bledsoe, R.M. Powell, and C.J. Paul. 1992. Metals in Ground Water: Sampling Artifacts and Reproducibility. *Hazardous Waste and Hazardous Materials*, 9(2): 149-162.

Puls, R.W. and C.J. Paul. 1995. Low-Flow Purging and Sampling of Ground-Water Monitoring Wells with Dedicated Systems. *Ground Water Monitoring and Remediation,* 15(1):116-123.

Ryan, J.N. and P.M. Gschwend. 1990. Colloid Mobilization in Two Atlantic Coastal Plain Aquifers. *Water Resour. Res.*, 26: 307-322.

Thurnblad, T. 1994. Ground Water Sampling Guidance: Development of Sampling Plans, Sampling Protocols, and Sampling Reports. Minnesota Pollution Control Agency.

U. S. EPA. 1992. RCRA Ground-Water Monitoring: Draft Technical Guidance. Office of Solid Waste, Washington, DC EPA/530/R-93/001, NTIS PB 93-139350.

U. S. EPA. 1995. Ground Water Sampling Workshop -- A Workshop Summary, Dallas, TX, November 30 - December 2, 1993. EPA/600/R-94/205, NTIS PB 95-193249, 126 pp.

U. S. EPA. 1982. Test Methods for Evaluating Solid Waste, Physical/Chemical Methods, EPA SW-846. Office of Solid Waste and Emergency Response, Washington, D.C.

Figure 2. **Ground Water Sampling Log**

Project _____ **Site** _____ **Well No.** _____ **Date** _____

Well Depth _____ **Screen Length** _____ **Well Diameter** _____ **Casing Type** _____

Sampling Device _____ **Tubing type** _____ **Water Level** _____

Measuring Point _____ **Other Infor** _____

_____

Sampling Personnel _____

Time	pH	Temp	Cond.	Dis.O_2	Turb.	[ ]Conc			Notes

Type of Samples Collected

_____

Information: 2 in = 617 ml/ft, 4 in = 2470 ml/ft: $Vol_{cyl} = \pi r^2 h$, $Vol_{sphere} = 4/3\pi r^3$

Figure 3. **Ground Water Sampling Log** (with automatic data logging for most water quality parameters)

Project _____ **Site** _____ **Well No.** _____ **Date** _____

Well Depth _____ **Screen Length** _____ **Well Diameter** _____ **Casing Type** _____

Sampling Device _____ **Tubing type** _____ **Water Level** _____

Measuring Point _____ **Other Infor** _____

_____

Sampling Personnel _____

Time	Pump Rate	Turbidity	Alkalinity	[ ] Conc	Notes

Type of Samples Collected

_____

Information: 2 in = 617 ml/ft, 4 in = 2470 ml/ft: $Vol_{cyl} = \pi r^2 h$, $Vol_{sphere} = 4/3\pi r^3$

STANDARD OPERATING PROCEDURE 6-18

Surface Water Sampling

Purpose and Scope

This Standard Operating Procedure (SOP) provides the Equipment, Materials, Procedures, and Guidelines to collect surface water samples. These wells consist of samples collected from the following:

- Oxnard Industrial Drain – 8 locations
- Lagoon – 2 locations
- Ditch south of the WMU – 2 locations
- Nature Conservancy Land East – 3 locations
- Hueneme Drain – 1 location
- J Street Drain – 1 location
- Ocean Surf Line – 1 location

The surface water sample collection may be performed by a subcontractor. The procedures in this SOP do not replace more detailed specifications developed or provided by the subcontractor. The subcontractor's procedures will be reviewed for consistency with this SOP before implementation of the work.

References

Field Sampling Plan		
Section	6.1.9	Task 9 – Surface Water Sampling
Table	5-5	Request for Analysis, Water Matrix Samples
Figure	A-7	Surface Water Sample Locations
Appendixes	B	GPS Coordinates for Sample Locations

Required Documents

1. Previous water-level and sampling data
2. Blank water level logs and field notebook

Materials and Equipment

Typical equipment required includes:

- Meters to monitor pH, specific conductance, turbidity, DO, ORP, and temperature
- Dip sampler
- Inline disposable 0.45-µm filters
- Hand pump
- Pre-cleaned sample containers and stainless-steel sampling implements

- Clean nitrile gloves
- Sample coolers and ice
- Log book

Procedures and Guidelines

Before surface water samples are taken, all sampler assemblies and sample containers are cleaned and decontaminated as described in SOP 6-24: *Decontamination of Sampling Equipment*. Surface water samples collected from water bodies tidally influenced should be collected at low tide and under low flow conditions to minimize the dilution of potential contaminants. Methods for surface water sample collection are described below.

Manual Sampling

Surface water samples are collected manually by submerging a clean glass, stainless steel, or Teflon container into the water body.

A sample is taken with the following specific steps:

1. The location and desired depth for water sampling are selected.
2. The sample site is approached from downstream in a manner that avoids disturbance of bottom sediments as much as possible. The sample container is gently submerged with the mouth pointed upstream and the bottle tilted slightly downstream. Bubbles and floating materials should be prevented from entering the bottle.
3. When the sample container is full, it is gently removed from the water. If sample transfer is required, it should be performed at this time.
4. For dissolved metals, transfer to container that can be pressurized with hand pump to force water through 0.45 micron filter.
5. Measure dissolved oxygen, specific conductance, temperature, pH, and ORP at the sampling location.

Key Checks and Items

- Start downstream, work upstream
- Log exact locations using permanent features
- Beware of hidden hazards

Documentation

The field documentation requirements will include recording all observations made during field activities to document the work and potential issues that could affect the quality of field data. The documentation should be entered in a field logbook with consecutively numbered pages and/or the data collection forms. Documentation should include at a minimum:

- Work/sample location

- Date of field activity
- Personnel on-site
- Time of day
- PPE level
- Field methods and procedures
- Field readings and measurements
- Field observations and comments
- Unusual conditions

Attachments

None.

STANDARD OPERATING PROCEDURE 6-19

Water-level Measurements

Purpose and Scope

This Standard Operating Procedure (SOP) provides the Equipment, Materials, Procedures, and Guidelines to measure discrete surface water and groundwater elevations.

Surface water levels will be measured from staff gauges at the following locations:

- Oxnard Industrial Drain, located near the footbridge at the end of Perkins Road
- Nature Conservancy Land – East, located between MW-2RA and MW-1R
- Nature Conservancy Land – North, located in the small pond to north of the WDA

Groundwater levels will be measured from existing shallow monitoring wells, new shallow monitoring wells, and new deeper monitoring wells within the Semiperched aquifer zone. These wells consist of the following:

Existing Shallow Wells (2-inch dia)	**Existing Shallow Wells (0.75-inch dia)**	**New Shallow Wells (2-inch dia)**	**New Deeper Wells (2-inch dia)**
MW-1R	MW-11	MW-20	MW-2C
MW-2RA	MW-12	MW-21	MW-2D
MW-2RB	MW-13	MW-22	MW-3C
MW-3RA	MW-14	MW-23	MW-3D
MW-3RB	MW-15	MW-24	MW-6C
MW-4RA	MW-16	MW-25	MW-6D
MW-4RB	MW-17	MW-26	MW-19C
MW-5	MW-18	MW-27	MW-19D
MW-6	MW-19		
9 Total	**9 Total**	**8 Total**	**8 Total**

The measuring point elevations of the existing staff gauges and monitoring wells are surveyed relative to the North American Vertical Datum of 1988 (NAVD 88). These measuring point elevations are documented in the following report: *Preliminary Evaluation of the Sources, Nature, Extent, and Movement of Contamination in Surface Water and Groundwater* (CH2M HILL, 2008).

The water level measurements may be made by a subcontractor. The procedures in this SOP do not replace more detailed specifications developed or provided by the subcontractor. The subcontractor's procedures will be reviewed for consistency with this SOP before implementation of the work.

References

Field Sampling Plan		
Section	6.1.9	Task 10 – Groundwater and Surface Water Level Measurement

Required Documents

1. Well construction logs and specifications
2. Previous water-level data
3. Blank sampling logs and field notebook

Equipment and Materials

Electronic water-level meter (Solinst or equivalent) with a minimum 50-foot tape; the tape should have graduations in increments of 0.01 feet or less.

Measurement Procedures

Surface Water Levels

Visually read the surveyed elevation directly on each staff gauge and record the water-level reading in the logbook. The three staff gauges are graduated to a resolution of 0.01-foot.

The two Nature Conservancy Land staff gauges are set to directly read elevation relative to NAVD 88. The "8-foot" mark is surveyed to NAVD 88 for the OID staff gage, which is not set to directly read elevation relative to NAVD 88.

Groundwater Levels

Verify that the water level meter is turned on and functioning properly. Slowly lower the probe on its cable into the piezometer or well until the probe just contacts the water surface; the unit will respond with a tone or light signal. Note the depth from a reference point indicated on the piezometer or well riser. This is the north side of the top of the inner well casing. Measure the distance from this point to the closest 0.01-foot interval on the tape, and record the water-level reading in the logbook.

Decontamination

Water level measurement equipment will be decontaminated before initial use and after use in each well. Decontamination procedures are detailed in SOP 6-24: *Decontamination of Sampling Equipment*.

Investigation Derived Waste Decontamination

Water generated during piezometer installation and development will be contained and managed as detailed in Section 6.4 of the FSP.

Documentation

The field documentation requirements will include recording all observations made during field activities to document the work and potential issues that could affect the quality of field data. The documentation should be entered in a field logbook with consecutively

numbered pages and/or the data collection forms. Documentation should include at a minimum:

- Work/sample location
- Date of field activity
- Personnel on-site
- Time of day
- PPE level
- Field methods and procedures
- Field readings and measurements
- Field observations and comments
- Unusual conditions

Attachments

None.

STANDARD OPERATING PROCEDURE 6-20

Air Sampling

Purpose and Scope

This Standard Operating Procedure (SOP) provides the Equipment, Materials, Procedures, and Guidelines to collect air samples for total suspended particulate (TSP) in ambient air using a battery operated BGI PQ200 high-volume sampler or similar. One round of air samples will be collected for laboratory analysis. The samples will be collected from temporary air sampling stations. The samples will be collected during periods of high winds over the winter to determine whether windblown material is moving offsite. The round of air samples will consist of six daily samples collected for each temporary sampling station.

Air samples will be collected at the following five locations:

- Upwind to west of Smelter Area in visitor parking lot
- At downwind edge of Smelter Area
- At downwind edge of WMU
- Downwind in Nature Conservancy Land East
- Down/transverse wind in Nature Conservancy Land North

The air sample collection may be performed by a subcontractor. The procedures in this SOP do not replace more detailed specifications developed or provided by the subcontractor. The subcontractor's procedures will be reviewed for consistency with this SOP before implementation of the work.

References

Field Sampling Plan		
Section	6.1.10	Task 11 – Air Sampling
Table	5-6	Request for Analysis, Air Matrix Samples
Figure	A-9	Air Sample Locations
Appendixes	B	GPS Coordinates for Sample Locations

Equipment and Materials

- BGI PQ200 high-volume sampler or similar
- Field Log Book and calibration logs
- PQ200 Instruction Manual
- BGI part KT006, cassette fitted with membrane, or part RD006, pack of six membranes
- Clean nitrile gloves
- Sample coolers and ice
- Log book

Procedures and Guidelines

Calibration

External Leak Test

On Nov. 1, 2000, EPA allowed the manual termination of a leak test in two minutes, if the decrease in pressure is less than 5cm of H2O. This change is incorporated into v.1.91 firmware. Earlier versions will run a 10 minute leak test with an acceptable pressure drop of 10 cm. of H2O.

1. Set up the system as illustrated in the instrument manual.
2. Insert an unused filter into the filter holder. (Do not use this filter for TSP sampling following the leak test; however, it may be used for other flow calibration checks.)
3. Remove the inlet from the downtube and place the flow audit adapter on the top of the downtube. Close the valve on the adapter to prevent air flow.
4. From the Main menu, use the arrow keys until * Test Menu flashes. Press SELECT to enter the Test Menu.
5. From the Test menu, press the down arrow until * Leak Test flashes. Press SELECT. The PQ200 LEAK TEST: In Progress! screen will be displayed. Ensure that the flow path is sealed (i.e., the valve on the flow audit adapter is closed) and press SELECT to begin evacuating the system.
6. The PQ200 will automatically evaluate the performance of the system and report whether the system has passed or failed the leak test. This is a 2 minute test. The initial (locked) pressure is displayed on the left side of the screen. This will be a number in excess of 75 cm of water column. In order to pass the test, the actively displayed pressure (shown on the right side of the screen) must not drop by more than 5 cm of water column during the 2 minute timing interval.
7. If the leak test is passed, the sampler is operating properly. If the leak test is failed, investigate and correct any malfunction:
   - Make sure the audit adapter is securely seated on the downtube and that the valve is completely closed
   - Make sure the Filter Assembly is securely closed
   - Make sure the filter cassette was securely closed and placed in the filter housing during the leak test
   - Visually inspect tubing for cracks or loose connections
   - Visually check o-rings in the flow audit adapter, and filter holder for cracks, deformation, or improper seating
   - If all of these items appear normal and the sampler continues to fail the leak check, contact the manufacturer.

8. Turn off the sampler, remove the flow audit adapter and put the inlet back on the downtube.
9. Remove the filter. Discard the filter or retain it for future leak tests or flow calibration checks.

Internal Leak Test

The purpose of the internal leak test is to determine if there is bypass leakage in the filter cassette. This test is performed exactly as above with two changes. The flow audit adapter is NOT installed on the end of the down tube and an impermeable membrane is placed in the filter cassette below the filter. Use BGI part KT006, cassette fitted with membrane, or part RD006, pack of six membranes. All test procedures and corrective actions are as in Section 3.2.1 of the PQ200 manual.

Multipoint Flow-Rate Calibration Procedure—MFC Sampler

1. Set up the calibration system as illustrated in the instrument manual. MFC samplers are calibrated with a filter and filter cassette installed. This filter will only be used for flow calibration and setting purposes.
2. Connect the electronic flow meter to the sampler.
3. Measure the flow at 5 different rates of 5, 10, 15, 20, and 25 LPM.
4. Record the flow rates on the MFC Calibration Data Sheet. Confirm that the r^2 value is less than 0.995 If <0.995 then adjust the sampler and recalibrate until this criteria is met
5. Set the sampler flow rate to 20 LPM for the sampling event.

Filter Installation Procedure

1. Following the manufacturer's instructions, loosen the nuts that secure the inlet to the base and gently tilt back the inlet to allow access to the filter support screen.
2. Examine the filter support screen. If the screen or the metal area round the screen appears dirty, wipe it clean. If the filter cassette is equipped with a protective cover, remove it and place the loaded cassette in position on the sampler support screen. Caution: Care should be taken when loading and unloading the filter because too much compression can damage the sealing gasket, or, tear the filter.
3. Lower the sample inlet. Inspect the sample inlet to make sure that it is resting on the filter cassette and not on the sampler's frame.
4. Open the front door of the sampler and examine the flow recorder. Remove any moisture inside by wiping it with a clean cloth. data sheet.
5. Turn on the sampler and allow it to equilibrate to operating temperature (3 to 5 minutes).
6. While the sampler is equilibrating, record the following parameters on the sampler field data sheet. Blank copies of the field data sheet are located in Appendix A.
   - Site location
   - Sample date

- Filter ID number
- Sampler model and S/N
- Operator's initials

7. Check and record the flow rate on the data sheet.
8. Turn the sampler off.
9. Check the following on the digital timer/programmer:
   - Note the number on the elapsed time meter and write this on the field data sheet under "start."
   - Check the display readout, making sure the current time is correct and the sample start time reads 0000 minutes.
   - The sampler power toggle switch should be in the middle "timed" position.
   - Set the "sample after" switch to the number of days to be skipped before the sampling period.
   - "Sample every X days" should be set for "5" (note: this number only needs to be greater than 1 to ensure that the sampler doesn't start again at the end of the 24 hour sampling before the filter can be recovered.)
   - "Sample for X hours" should be set for "24."
   - Push "set" switch down to "timer" position momentarily. This step must be done after getting the previous timer/programmer positions as outlined above.
   - The sampler power toggle switch should be in the middle "timed" position.
10. Close the sampler door, taking care not to crimp the vacuum tubing or power cords.
11. Make sure the sampler is within the "Guidelines" for sampling that are described on the field data sheet. If the sampler fails to meet these guidelines, correct as necessary and document all activities in the site log book and on the field data sheet. The sampler is now ready to sample ambient air.

Filter Recovery Procedure

After sampling, the operator should return to the monitoring site to retrieve the exposed filter. Particle loss or filter damage will result if the filter is left in the sampler for extended periods.

1. Turn on the sampler and allow it to equilibrate to operating temperature (3 to 5 minutes).
2. Connect the electronic flow meter to the sampler and measure the final flow rate. Record it on the MFC sampler field data sheet.
3. Turn off the sampler.
4. Open the door of the sampler

5. Record the elapsed time of the sampling period on the MFC sampler field data sheet.
6. Observe conditions around the monitoring site; note any activities that may affect filter particle loading (e.g. wind, precipitation, farm or range activities, fire) and record this information on the sampler field data sheet.
7. Raise the sampler inlet and remove the filter cassette. To avoid particle loss, be careful to keep the cassette as level as possible. Cover the cassette with the metal protective cover provided.
8. Keeping the filter cassette level, carefully transport it, the data sheet, and the flow recorder chart to the site shelter for sample recovery. Post-sampling filter cassette handling procedures include the following:
   - Remove the f the filter cassette from the sampler, taking care not to disturb the sample. Vinyl surgical gloves will be worn during filter recovery.
   - Open the cassette and remove the filter. Place it in a secure envelope
   - If any portion of the filter is damaged, note on the field data sheet.
   - Fill out the appropriate chain of custody forms and ship filter to lab for analysis.
9. At the end of the sampling event, ship filters, and field data sheets to the data coordinator, using a chain of custody form. Minimum information required is the sampling data, the filter number, and the site name. The operator needs to sign and date under "sampler" and "relinquished by." Place the filters and field data sheets in an envelope with the top two copies of the chain-of-custody form. Place two pieces of stiff cardboard in the envelope, one on either side of the stack of filters, as protection while shipping. Seal envelope and place signed custody seals on each end of glued portion of envelope. Filters should be shipped via overnight mail or other registered means to the data manager.

The field operator will keep on file copies of field data sheets, chain-of-custody forms, calibration data sheets, and courier shipments.

Documentation

The field documentation requirements will include recording all observations made during field activities to document the work and potential issues that could affect the quality of field data. The documentation should be entered in a field logbook with consecutively numbered pages and/or the data collection forms. Documentation should include at a minimum:

- Work/sample location
- Date of field activity
- Personnel on-site
- Time of day
- PPE level
- Field methods and procedures

- Field readings and measurements
- Field observations and comments
- Unusual conditions

Attachments

None.

STANDARD OPERATING PROCEDURE 6-21

Documentation and Records

Purpose and Scope

The purpose of this guideline is to provide methods for the documentation of records taken in the field.

Field Documentation

Field Logbooks

Field notes commonly are kept in bound logbooks used by surveyors and produced, for example, by Peninsular Publishing Company or Forestry Suppliers, Inc. (J.L. Darling Rite in the Rain No. 550) Sesco, Inc. Pages should be water-resistant, lined, and numbered, and notes should be taken only with water-proof ink, such as that provided in Sanford Sharpie permanent markers.

All lines of all pages should be used to prevent later additions of text, which may be questioned in legal terms. Any pages not used should be marked through with a line, the author's initials, and the note "Intentionally Left Blank."

All pertinent information should be entered into the logbook, including times of starting and stopping work, activities, personnel on the work site, and equipment-calibration results and any equipment problems. The weather at the start of the day should be noted at the top of the first page for the day, and any major changes in weather should be noted at the appropriate time. Summary descriptions of soil samples and drilling cuttings can be entered in depth sequence, along with PID readings and other observations. It is helpful to include a hand-drawn diagram of well construction details and sampling locations in relation to permanent site features.

No irrelevant material, including comical statements, should be entered into the logbook.

An example of a set of logbook entries is provided as Attachment A.

Field Notebooks

Field equipment and forms notebooks may be used in lieu of bound field logbooks but are strongly discouraged. Although they do not have the advantage of containing all pertinent information in one volume, they do allow the use of pre-printed forms, which can make note taking easier. The notebooks are maintained to document field equipment maintenance and contain calibration logs and field forms, as described below. These provide information which is not recorded in sequentially-numbered, bound site or field logbooks. As an alternate method to using the field equipment and forms notebooks, the information maintained in these notebooks may be documented in the field logbooks. General site information should be documented into the field notebook that includes:

- Site name, personnel onsite and time and date of arrival
- Ambient weather conditions
- Documentation of field activities including decontamination, sampling, and preparation.
- Lot number and brand name for solvent and acid decontamination solutions and analyte-free water used for equipment and field blanks.

An example of well-completed field notebook entries is provided as Attachment B.

Calibration Logs

Calibration logs may be included in the field equipment notebooks and are used to document the proper maintenance and calibration of field testing equipment. All equipment will be inspected and approved by the Field Team Leader before being used, and a calibration log sheet shall be maintained for each instrument used on-site and shall be kept in the notebook. The calibration log will document:

- Name and identifying number of the instrument
- Date calibrated
- Calibration points
- Identification of the calibrator
- Manufacturer, lot number, and expiration date of calibration standards
- Results of the calibration.

Field Forms

Field forms may also be kept in the field notebook if using a three-ring binder form. Field forms include:

- Soil boring log
- Monitoring well construction records
- Soil gas probe construction records
- Well purging records
- Soil gas purging records
- Sample collection forms

An example of each of these forms is provided as attachments.

Attachments

A - Example of field logbook entries.

B - Standardized field logbook entry formats.

CH2MHILL

PROJECT NUMBER	BORING NUMBER
322655.FI.21.01	SHEET OF

SULPHUR BANK MERCURY MINE BORING LOG

DEPTH BELOW SURFACE (FT)	DEPTH ADVANCED (FT)	RECOVERY (IN)	USCS	SOIL DESCRIPTION	COMMENTS
				SOIL NAME, USCS GROUP SYMBOL, COLOR, MOISTURE CONTENT, RELATIVE DENSITY, OR CONSISTENCY, SOIL STRUCTURE, MINERALOGY	FIELD MEASUREMENTS (pH, ORP, Hg Vapor) SAMPLE COLLECTION (date, time, sample ID)

PROJECT NUMBER	WELL NUMBER

WELL COMPLETION DIAGRAM

PROJECT : LOCATION :

DRILLING CONTRACTOR : Easting: Northing:

DRILLING METHOD AND EQUIPMENT USED :

WATER LEVELS : START : END : LOGGER :

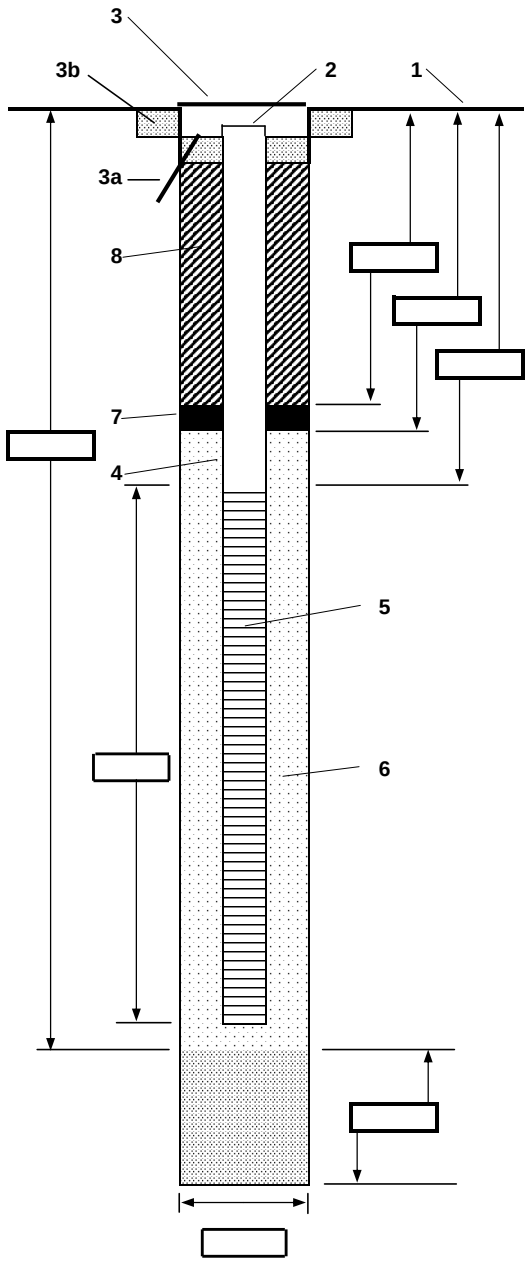

1- Ground elevation at well _____

2- Top of casing elevation _____

3- Wellhead protection cover type _____
   a) drain tube? _____
   b) concrete pad dimensions _____

4- Dia./type of well casing _____

5- Type/slot size of screen _____

6- Type screen filter _____
   a) Quantity used _____

7- Type of seal _____
   a) Quantity used _____

8- Grout
   a) Grout mix used _____
   b) Method of placement _____
   c) Vol. of well casing grout _____

Development method _____

Development time _____

Estimated purge volume _____

Comments _____

CH2MHILL	PROJECT NUMBER	WELL ID

GROUNDWATER SAMPLING FIELD DATA SHEET

PROJECT : LOCATION :

WEATHER (wind/temp/ppt) : OTHER NOTABLE FIELD CONDITIONS :

INITIAL ORGANIC VAPOR METER READINGS:

INITIAL DEPTH TO WATER (feet): TOTAL DEPTH OF WELL (feet): SCREENED INTERVAL (feet):

INITIAL DEPTH TO PRODUCT (feet):

METHOD OF PURGING: Unit Well Casing Volumes (Sch 40 PVC)

DISPOSITION OF DISCHARGE WATER: 2" well = 0.16 gal/ft

MONITORING EQUIPMENT USED: 4" well = 0.64 gal/ft

Date/ Time	Discharge Rate (vol x time) (gpm)	Total volume (gals)	Water Level (ft BTOC)	Temp. (°C)	pH	Conductivity (mS/cm)	Turbidity (NTU)	Dissolved Oxygen (mg/L)	OPR (mV)	Remarks (color, odor, sheen, sediment, etc.)

SAMPLE INFORMATION:

CH2MHILL *Applied Sciences Laboratory*

Sheet _ of _

Soil Gas Sampling Field Log

Project Info

Project Name: _____ **Project # :** _____

By: _____ **Date:** _____

Structure

Identification: _____

Address: _____

Sample Location type:

- ☐ concrete slab on grade
- ☐ concrete footing w/crawl space
- ☐ basement
- ☐ Yard or Driveway
- ☐ other (describe) _____

Soil Gas Sampling System

Probe type (describe): _____

Probe to sample interfacesystem (describe): _____

Sample collection type: ☐ Syringe ☐ Tedlar bag ☐ Summa canister

Other info (describe other aspects) _____

Soil Gas Probe Purging & Sampling Log

Sample location (show in diagram)	1	2	3	4
Sample Identification (field ID)				
Time Installed				
Depth of installed probe (feet bgs)				
Leak check (probe/sampling interface)				
Calculated dead volume (1 purge volume), cc				
Purge rate, cc/min.				
Purge duration, min.				
Purge vacuum, " Hg				
Max PID Reading, ppmv (optional)				
Purge completed (time of day)				
Sampling period started (time of day)				
Sampling rate, cc/min				
Sampling vacuum, " Hg				
Sampling period ended (time of day)				

Observations and Comments: _____

Attachment A
Examples of Field Logbook Entries

3/21/96

Rite in the Rain

ALL WEATHER

LINE RULE

Spiral Notebook

Project FNA Logbook
Storm Tank Pit
Geoprobe, Ft. Dain

72700.00.20
10 Mar —

- Screening Well Sampling
- Soil Borings
- MW Installation

No. 393
32 Sheets
4 5/8 x 7

TABLE OF CONTENTS

Description	Page
Activities on 10/16/55	1
Activities on 10/17/55	4

MONDAY OCTOBER 16, 1995

0900 - Arrive Fairbanks on AK Air flt 89 from ANC

Pick up rental vehicles, equipt & materials, check into hotel (Regency)

Team member: Tony Wagner
Bob Trebble, Kathy Kruschke

Weather: partly cldy ≈ 20°F

1200 - lunch

1300 - Meet w/ Joe Mclan/DPW discuss location for staging, DCon, storage, etc.

Joe said to check w/ENSR for room @ bldg 1-5qr share w/HLA

A.R. Wagner 10/16/95

1330 - At bldg 1592
Talked w/ Tim Gould / HLA.
OK to occupy bldg 1592
they will operate from
trailer.

1400 - Air Force Msgt. Bourrard
arrive @ bldg 1592. OK
for us to use open bay
for whatever we need.

Inventory equipt. & materials

1600 - met w/ Driller Calvin Frey
and helper Jeff. They are
collecting their equipt &
materials. Health & Safety briefing

1730 - bldg 3481, w/ Calvin & Jeff
looked at site. Calvin
indicated that brush clearing
may take up to 1 day to
complete. Also, not sure
a pickup truck can
manuever over the rough
terrain. May be able to
A. R. Wagen 10/16/95

use a bobcat to pull
screening well rig to location.

Agreed to meet driller early
am tomorrow ready to
drill @ bldg. 3481.

1800 - end day.

A. R. Wagen 10/16/95

A. R. Wagen 10/16/95

TUESDAY OCTOBER 17, 1995

0730 - Arrive @ bldg 1595. Prepare sample kits, calibrate instruments

Weather: mostly sunny, cold ≈ 15°F

Team: Tony Wagner screening well sampling

Kathy Kruschke, Bob Trebble MW sampling

0815 - Drillers arrive @ bldg 1595 Readying equipt.

Calvin ok's SOW and performance specification for Discovery drilling. This will be faxed to ANC for inclusion in the contract.

0830 - Daily MTG including brief safety discussion, work for day.

A.R. Wagner 10/17/95

Agree to meet Calvin at bldg. 3481 @ about 0930 to install screening wells.

Calibrate OVM and LEL/O_2 meter. Calibration info in calibration logbook.

Equipt/materials loaded into Van.

0900 - Arrive @ Regency Hotel fax SOW/Performance specification to Jacques Gurmano/ANC

0930 - Arrive @ bldg 3481.

0940 - Drillers arrive at bldg 3481 indicate that screening well rig is frozen due to cold. Will take it to 1595 to thaw.

A.R. Wagner 10/17/95

1045 - Drillers determine that rig is not frozen; actually a bad starter. Will go to Fairbanks to find one.

1145 - Drillers return to bldg 1555. not able to locate new starter. May have to get one from AVC. Will keep checking w/ local supplier.

In meantime, drillers will prepare lg. drill rig for use and clear brush @ bldg 3425.

1300 - Drillers had to order a new starter from Portland, OR. Will arrive tomorrow Am.

1500 - Drillers report that they have cleared access to screening location at bldg 3425

1730 - end day
A. R. Wagner 10/17/95

WEDNESDAY OCTOBER 18, 1995

0800 - Arrive @ bldg 1555. Prep for sampling

Team: Tony Wagner: screening well sampling, Kathy Kruschke and Bob Trebble: existing well sampling

Weather: partly cloudy
Temp = 14°F

Calibration of instruments by Bob Trebble recorded in calibration logbook OVM and LEL meter.

1215 - Screening well drill rig repaired. Move to bldg 3481. Health & safety briefing w/ drillers
1300 - begin drilling @ 3481. Screening well #01.

A. R. Wagner 10/18/95

Photo
Roll #1
1) screening well rig @
3481 SCØ1

1330 - sampling @ 3481 SCØ1
depth to water 11.85' bgs

5.35' of water x .016 gal/ft
= .246 gal (well vol)

1340 - ~~sample~~ purge ≈ 3.5 gal
from SCØ1

begin sampling:
collect BTEX, GRO, DRO samples
sample # 95ENØ1ØØSC

No GW Monitoring

1400 - complete sampling of SCØ1
remove drill string

move to west side of fence
to next screening well

a.R. Wagner 10/18/95

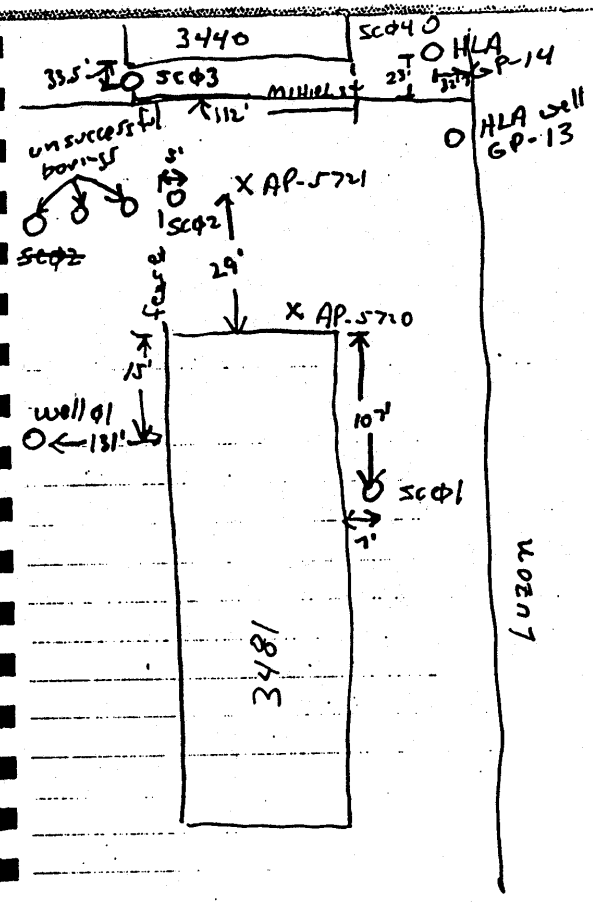

Building 3481
Screening well locations

Attachment B
Standardized Field Logbook Entry Formats

14.0 Documentation Reports

14.1 Logbook Protocol

14.1.1 Summary of Method

Logbooks are used for recording pertinent field activity information including, but not limited to, the following:

- Fieldwork documentation
- Field instrumentation readings
- Photograph references
- Sample tag and label numbers
- Field descriptions, equipment used, and field activities accomplished to reconstruct field operations
- Meeting information
- Important times and dates of telephone conversations, correspondence, or deliverables

Field calculations and calibration records will also be recorded in logbooks. The methods of calculation and the format for recording the calculations will meet the applicable procedures for that instrument or actuator.

14.1.2 Required Equipment and Apparatus

Required equipment and apparatus are as follows:

- Logbook with appropriate data forms will be used. The logbook will be bound and have serialized pages. Data forms may be printed in the logbooks. The logbook will have water-repellent pages.
- Indelible black pens will be used.

14.1.3 Contamination Control

To the extent possible, the logbook should be protected from contamination by carrying it in a plastic bag or in an engineer's metal clipboard that closes over the logbook. Entries should be made by persons wearing clean gloves; persons wearing contaminated gloves or protective clothing should not handle the logbook. Should the logbook become contaminated, it will be decontaminated (dried, blotted) or placed in a clear plastic bag so that entries may still be

read. If the logbook is contaminated to the extent that it cannot be removed from the sampling area, it will be hand copied onto the appropriate data forms at the site. The circumstances warranting this action must be noted on the rewritten form.

14.1.4 Definitions

Logbook

The person to whom a new logbook is first issued will check that the cover has been clearly marked (using indelible black marker) with the following information:

- The words "FORT WAINWRIGHT GROUNDWATER SAMPLING, STORAGE TANK SITES PROJECT LOGBOOK" and "DELIVERY ORDER 4."
- Logbook activity title–A short title that describes the contents of the logbook shall be used. The activity titles are designed to facilitate data retrieval. All data recorded in a logbook shall be appropriate to the logbook activity title. Following is a list of potential logbook activity titles for this project. Additional titles may be added to this list. To maintain standardization, this procedure shall be revised when other titles are created.

Activity Title	Abbrev.	Description
Screening	SC	Soil and groundwater screening activities including Hydropunch, MicroWell, drive point, or auger sampling methods
Soil borings	SB	Borehole, hand auger, and surface soil sampling; geologic description; and in situ testing data such as cone penetrometer and geophysical logging
Groundwater sampling	GW	Data from groundwater sampling events
Well installation	WI	Well installation records including materials used, methods employed, and construction details
Hydrologic data	H	Data from aquifer testing (pump, slug, and packer testing), head measurements (when not part of sampling), and surface water hydrology (weir studies)
Decontamination	DC	Logs of drilling and sampling equipment decontaminated at the decontamination facility, including records of equipment blanks. Field decontamination notes and records of equipment blanks at drilling

Activity Title	Abbrev.	Description
		locations will be included in the sample team leader's logbook.
Plugging and abandonment	PA	Records of grouting of soil borings and abandonment of wells

- Date of first entry in this logbook–The person turning in a completely filled logbook will ensure that the date of last entry in the logbook is also shown on the cover.

- Logbook number–The logbook number shall be in the following format:

  Logbook activity abbreviation title–unique sequential number.

  For example, the first logbook for soil borings would be numbered SB-001. Another example for the third logbook for groundwater well installation would be numbered WI-003. If possible, the logbook number should also be lettered on the spine of the logbook to facilitate retrieval from a bookcase.

Information Form

Produced data entry or information forms that list the data needs are used for a particular task or event. Information forms serve two purposes:

- They act as reminders of specific data needs.

- They aid in data entry in the Fort Wainwright Groundwater Sampling, Storage Tank Sites, database.

Information forms include soils classification charts and other basic data entry forms.

14.1.5 Procedures

The field logbook serves as the primary record of field activities. Entries are made chronologically in sufficient detail to allow the writer to reconstruct the events without relying on memory.

The logbook coordinator issues the appropriate logbook to the field logbook user at the beginning of each day. Each logbook shall contain a table of contents and a chronological record showing to whom the logbook was issued by date. Each logbook shall also contain a page or pages of the abbreviations used in the logbook, along with their meaning.

All field descriptions and observations are recorded in the logbook. Observations are noted in indelible black ink; any entry errors are corrected by drawing one solid line through the incorrect entry, which is then initialed and dated by the logbook user, who also provides a written explanation of the correction, if necessary. At the end of each day, the logbook entry

is photocopied. One copy remains with the author and one copy is given to the logbook coordinator.

The field notes may be transcribed by the users onto clean information forms at the completion of each activity. The clean copy is used for database entry. Both the logbook and the clean copy will be submitted to the project manager or designee, who will check them for consistency. To prevent the release of unverified data, all requests for information or data received before data are entered into a database must be routed to the project manager.

The logbook user is responsible for completing necessary reports that detail sampling errors or omissions.

For each activity, the logbook entries will be completed to contain the following information, if appropriate:

- Name of activity–Such as subsurface soil sampling and groundwater monitoring well installation
- Task team members and equipment–Name all members on the field team involved in the specified field activity. List equipment used by serial number or other identifier; include information on calibration.
- Activity location–Indicate location of sampling area, as marked on the field stake placed by the civil survey, if appropriate.
- Weather–Indicate general weather, temperature, and precipitation conditions.
- Methods–Indicate method and/or procedure employed for activity.
- Sample number–Indicate the unique number associated with each physical sample, along with the sample collected, if applicable. Identify QC samples.
- Sample type and volume–Indicate the media, container type, preservative, and volume for each sample.
- Sample depth or interval–Indicate the depth interval from which each sample is collected (for example, 1 foot to 1.5 feet).
- Time and date–Record the time and date (TIME/DD/MMM/YY) on which the activity was performed (for example, 0830/27/JUN/87). Time is expressed in 24-hour (military) notation, in which the hours of 1:00 p.m. to 11:00 p.m. are represented by 1300 to 2300 hours, noon is 1200, and midnight is 0000. In recording the date, the day and year must be recorded with two numeric digits each. For the first 9 days of the month, the numbers 01 through 09 should be used. This procedure should be followed whenever a date is recorded.
- Analyses–Indicate the appropriate code for analyses to be performed on each sample.

- Field measurements–Indicate measurements and field instrument readings taken during each activity.

- Chain of custody and distribution–Indicate the chain-of-custody control number for each sample collected and indicate to whom samples are distributed and who the user is.

- References–If appropriate, indicate references used, such as maps or photographs.

- Narrative (including time and location)–Create a factual, chronological record of the team's activities throughout the day, including the time and location of each activity. Include descriptions of any general problems encountered and solutions. Provide the names of nonfield team personnel, including the client, who visit the sampling area, request changes in activity, affect the work schedule, request information, or observe team activities. Record any visual or otherwise sensed observations relevant to the activity or the sample itself.

  It should be emphasized that logbook entries are for recording data and chronologies of events. The logbook author must also include observations and descriptive notations. He or she must take care, however, to be objective and record no opinions or subjective comments.

- Recorded by (signature)–The individual responsible for the entries contained on the form or in the logbooks will be recorded for the activities of each work shift, along with the date, at the bottom of each logbook page.

- QC check by (signature)–The logbook is signed by the task leader who performs the QC check on the completed entries.

In addition, there are individual data needs tailored to separate tasks (for example, soil logging, and water sampling). These data needs are listed on database information forms. All items listed on these forms must be addressed.

Boring logs and well installation information will be recorded on CH2M HILL forms. Two copies will be made daily. One copy will be given to the project manager, and one will be retained by the field supervisor.

14.2 Field Forms

Field forms are contained in Appendix E to this work plan. Field forms will consist of the following:

- Soil Boring Log
- Monitoring Well Construction Details
- Well Development Data
- Groundwater Sampling Form
- Sample Label

STANDARD OPERATING PROCEDURE 6-22

Digital Camera Use and Documentation Procedures

Purpose

This Standard Operating Procedure (SOP) describes how to use digital cameras and manage digital camera data.

Scope and Applicability

This SOP is applicable to taking digital photographs and placing the digital data in a database. Digital photographs may be taken to document field activities, site conditions and features, and sampling locations.

Equipment and Materials

The following equipment will be available:

- Digital camera
- Spare batteries
- 12-volt charger
- Digital camera carrying case and manual
- Permanent marker
- Personal computer
- Dry-erase board and markers

Typical Camera Features

The camera will have the following features:

- Save pictures (in standard mode) directly to a memory stick or comparable
- Auto focus; manual focus available if required
- Zoom
- Brightness control
- Playback of photos on camera screen
- Display of photograph number, date, and time
- Flash
- Timer
- Display showing time remaining on battery and remaining disk capacity
- Ability to protect and delete images that have been taken

Camera Use

Digital cameras will be checked out to a member of each field team to document field activities. Each field team will be directly responsible for the camera and ensure that it is not exposed to excessive heat, cold, or moisture. The field team leader will be responsible for digital photograph documentation or for assigning documentation duties to a team member.

Digital photographs will be taken to document field activities and locations. Examples of important photo documentation include the following: (1) photographing sampling locations with associated landmarks and compass directions noted, and (2) photographing field sampling techniques used, such as equipment use/operation and weirs placed in channels.

Digital photographs will be collected at a high-pixel setting such that enlargements can be made with minimal degradation in picture quality.

Photograph Documentation

Each field team will keep a daily record of all photographs. The following digital photograph data will be collected and recorded in the field logbook or a photographic log sheet:

- Project and event identification numbers (ID) – this information is obtained from the field team leader.
- Team members – list each team member.
- Photograph number – record the number of the photograph and the photograph file name (as coded below).
- Date and time – as provided by the camera display.
- Description – information about the target of the photograph.
- Locations – identify the sample location ID, if applicable. If a photograph is being taken for a particular location that has a defined location ID, the location ID and date will be written on a dry-erase board. The dry-erase board with the location ID designation will be included in the frame of the photograph. For photographs of locations that contain multiple depth intervals for sampling, the appropriate depth interval will also be included on the dry-erase board.
- Northing and easting – list the coordinates of the subject of the photograph and the compass direction in which the picture is being taken. The coordinates of the location where the photograph was taken will be recorded (if applicable) in the Notes section of the Digital Photograph Data Form. Coordinates can be acquired from a global positioning system (GPS) or from the Geographic Information System if the location has been surveyed. Coordinates do not need to be recorded for a station if the location was surveyed prior to photograph collection.
- Notes – record any other pertinent information (including coordinates of location where picture was taken [see above]).

Key Checks/Items

The following items should be checked:

- Make sure the camera's battery is fully charged on a daily basis.
- Keep extra memory sticks available.
- To save battery life, use flash only when necessary.
- Make sure the camera quality level is set at "best."
- Review photograph records periodically to ensure that the electronic photographs and the data log agree.
- Leave enough time at the end of the field day to transfer the data.

PROJECT NUMBER	DATE SHEET 1 OF

PHOTOGRAPH LOG

PROJECT : Halaco Remedial Investigation **LOCATION :** Oxnard, CA

PHOTO NO.	SCENE DESCRIPTION

STANDARD OPERATING PROCEDURE 6-23

Calibration of Field Instruments

Purpose and Scope

This Standard Operating Procedure (SOP) provides the Equipment, Materials, Procedures, and Guidelines to calibrate typical field instruments used for remedial investigations. These instruments include the following:

- Flow-through water quality meter (QED MicroPurge® basics™ MP20 Flow Cell or equivalent)
- Turbidity meter (Hach 2100P or equivalent)
- Photoionization Detector (Mini-Rae or equivalent)

If possible, dedicated field instruments should be employed for monitoring activities. Prior to sampling, field instruments must be inspected and calibrated. Each instrument will be inspected to ensure that it is working properly. Any damage that affects the proper operation or safe use of the instrument will be logged in the field notebook. The instrument will be tagged so that it is not inadvertently used, and it will be removed from the equipment inventory until it has been properly repaired.

Calibration will be in accordance with procedures and schedules by the manufacturer. Calibration results logged in the field logbook, the calibration log, or both for that specific instrument. Any instrument "drift" from prior calibration should also be recorded in the field notebook or calibration log.

Calibrated equipment will be uniquely identified by using either the manufacturer's serial number or other means. Because field equipment will be rented, a log of maintenance and repairs will not be kept for these instruments.

Scheduled periodic calibration of testing equipment does not relieve field personnel of the responsibility of employing properly functioning equipment. If an individual suspects an equipment malfunction, the device will be removed from service, tagged so that it is not inadvertently used, and the appropriate personnel notified so that a recalibration can be performed or substitute equipment obtained. Results of activities performed using equipment that has failed recalibration will be evaluated. Activity results will be documented if they are adversely affected, and the field team lead and project chemist will be notified.

References

Field Sampling Plan		
Section	6.3.1	Field Equipment Calibration

Equipment and Materials

Required Documents

- Equipment manufacturers' manuals
- Project field sampling plan (FSP)
- Previous calibration records
- Blank calibration sheets

QED MicroPurge® basics™ Flow Cell MP20 – Equipment List

- pH standards (pH 7 and pH 4)
- Oxidation reduction potential (ORP) standard (Zobell's solution)
- Specific conductance or salinity standard
- Spare batteries
- Deionized (DI) water and tap water

Hach Turbidity Meter – Equipment List

- Hach DI water, nephelometric turbidity units (NTU) = 0
- Standard solutions, NTU = 0.10 or 10 and NTU = 100
- Spare batteries

Photoionization detector – Equipment List

- Isobutylene 100-ppm standard calibration gas
- Regulator

Procedures and Guidelines

Preparation and Setup

1. Initiate field sampling logbook for activity.
2. Inspect equipment necessary to carry out activities detailed in event-specific FSP.
3. Always use fresh solutions for calibration.
4. Calibration should be performed prior to sampling each day and values checked against standards at the completion of every day.
5. If equipment is owned and operated by the project, review the field equipment binder servicing records to anticipate the next service (not necessary with short-term-use rental equipment).

Note**:** Equipment and solutions should be stored in an air-conditioned office onsite to maintain integrity. If this is not possible, equipment and solutions should be stored in a temperature-controlled area offsite and transported as needed to the site. Check the expiration date on standards prior to calibration.

Calibration Procedures

QED MicroPurge® basics™ Flow Cell MP20 or equivalent

Periodic dissolved oxygen (DO), ORP, temperature, and turbidity calibration must be done under controlled conditions prior to the field measurements with a known concentration solutions. These parameters will be calibrated by the factory or vendor immediately before shipment to the field, and calibration will be checked daily in the field when used. Other parameters (i.e., pH and specific conductance) should be calibrated immediately before field sampling and daily throughout long sampling events.

1. Fill calibration cup with the appropriate calibration standard for the parameter being calibrated.
2. Remove the storage cup. Be careful not to splash the standard. Clean and prepare sensors as detailed in the owner's manual. Attach the calibration cup.
3. Allow 10 minutes for stabilization. Monitor parameter stability on Screen 1 or Screen 2.
4. Auto-calibrate by selecting "Calib" and the parameter to be calibrated (e.g., pH or specific conductance). Enter the one or two values as required to complete the calibration (two values for pH).
5. When auto-calibration is complete, check the accuracy by recording all parameters in the measurement mode. Record the unit's serial number, measured parameters, date, and time on the calibration sheet.
6. The MP20 has built-in checks for acceptable limits for the calibrated parameters and will respond with "Fail" if the calibration is not satisfactory. If measured parameters are not within acceptable limits (±0.1 pH units and ±10 percent for specific conductance), investigate why the calibration failed (faulty sensor, bad standard, low battery, mistyped standard value) and repeat the calibration procedure. Temperature as standard values is expected at 25 degrees Celsius (°C).
7. Discard used standard solution.
8. Rinse calibration cup and probes with DI water.
9. Fill calibration cup to fill line with the second calibration standard solution.
10. Place probes in calibration cup.
11. Allow 10 minutes to equilibrate.
12. Discard standard solution.
13. Operate meter in read mode and record field parameter measurements on the calibration sheet.
14. If measured parameters are not within acceptable limits (±0.1 pH units and ±10 percent for specific conductance), perform manual calibration of each parameter standard to match the second solution. Note temperature as standard values are expected at 25°C.
15. Rinse probes with DI water.

16. Cap probes with storage cup or calibration cup ¼ filled with DI or tap water.
17. Proceed with field measurements as needed while noting the following:
    - Probes must be rinsed thoroughly with DI water after each sample location.
    - Probes must always be submersed in liquid (capped with storage cup or calibration cup filled ¼ with tap water when not placed in the liquid filled flow-through cell).
    - Absolutely no air bubbles or leaks should be present in the flow-through cell, repair or replace as needed.
    - Ensure that readings have stabilized prior to recording a measurement.
    - All field parameters must be compared with previous data and documented on the field data sheet.

Hach Turbidity Meter

1. Perform a check according to the manufacturer's instructions with Hach DI water and standard solutions.
2. Record reading, time, and date on calibration sheet for both DI water and standard solution.
3. If the readings are within 10 percent, proceed with turbidity measurements; if not within this range, troubleshoot and repeat as needed.

Photoionization Detector

1. Perform a check according to the manufacturer's instructions in a fresh air environment for zero calibration readings and isobutylene 100-ppm isobutylene for span calibration readings.
2. Record reading, time, and date on calibration sheet.
3. If the span calibration readings are not within 5 percent, troubleshoot and repeat as needed.

Key Checks and Preventive Maintenance

Materials generated during sampling (e.g., debris, personal protective equipment (PPE), decontamination liquids) will be disposed of in accordance with the waste management plan detailed in the FSP.

Reference

None

Attachment

CALIBRATION LOG			
Date			
Personnel completing calibration			
Instrument			
Model/Serial Number			
Calibration Solution/Standard			
Lot #			
Expiration Date			
Readings			
Parameter		Final Reading	
Parameter		Final Reading	
Parameter		Final Reading	
Parameter		Final Reading	
Parameter		Final Reading	
Parameter		Final Reading	
Parameter		Final Reading	
Parameter		Final Reading	
Parameter		Final Reading	
Parameter		Final Reading	
Maintenance Needs			
Any general observations or notes			

STANDARD OPERATING PROCEDURE 6-24

Decontamination of Sampling Equipment

Purpose and Scope

The purpose and scope of this SOP is to provide general guidelines for the decontamination of sampling equipment, monitoring equipment, and heavy equipment used in potentially contaminated environments.

References

Field Sampling Plan		
Section	6.3.2	Equipment Decontamination

Equipment and Materials

- Distilled water
- Potable water from a municipal water supply or bottled drinking water in 5-gallon containers.
- 2.5 percent (W/W) Alconox and water solution
- Large plastic pails or tubs for Alconox and water, scrub brushes, squirt bottles for Alconox solution, water, plastic bags, and sheets
- Polyethylene tank or buckets for collection of water
- Phthalate-free gloves
- Decontamination pad and steam cleaner/high-pressure cleaner for large equipment

Guidelines

Heavy Equipment and Machinery (Drilling Rigs and Support Equipment)

Heavy equipment and machinery may be steam cleaned in a designated area before the onset of drilling, after each borehole, and before leaving the site. If performed, the steam-cleaning area would be designed to contain decontamination waste and waste water. The area would be an HDPE-lined, bermed pad. A pumping system would be used to convey decontaminated water from the pad to drums or a storage tank.

Downhole Drilling Tools

Downhole drilling tools will be steam cleaned before the onset of drilling, between boreholes, and before leaving the site. This will include, but will not be limited to, drill

augers, drill casing, drill rods, split-spoons or similar samplers, coring equipment, augers, and casing. The steam cleaning will be performed in portable decontamination trailers.

Downhole Sampling Tools

Before the use of a sampling device such as a split-spoon sampler for the collection of a soil sample for physical characterization, the sampler will be cleaned by scrubbing with a detergent solution followed by a potable water rinse.

Before the use of a sampling device such as a split-spoon sampler for the collection of a soil sample for chemical analysis, the sampler will be decontaminated following the procedures outlined in the following subsection.

Field Equipment

Water-level Indicators

Water-level indicators that consist of a probe that comes into contact with the groundwater must be decontaminated using the following steps:

- Washed with Alconox or Liquinox solution.
- Rinse with tap water.
- Rinse with distilled water.

Probes

Probes (e.g., pH or specific ion electrodes, micropurge flow-through cell, geophysical probes, or thermometers coming in direct contact with the sample) will be decontaminated using the procedures specified above unless manufacturer's instructions indicate otherwise. For probes that make no direct contact (e.g., OVM equipment), the probe will be wiped with paper towels.

Sampling Equipment

Sampling equipment such as spatulas, spoons, bowls, or pumps should be decontaminated and cleaned in the manner prescribed in this SOP.

Procedures

Sampling Equipment Decontamination—Groundwater Sampling Pumps

Sampling pumps are decontaminated after each use as follows.

1. Don phthalate-free gloves.
2. Spread plastic on the ground to keep hoses from touching the ground.
3. Turn off pump after sampling. Remove pump from well and place pump in decontamination tube, making sure that tubing does not touch the ground.
4. Turn pump back on and pump 1 gallon of Alconox solution through the sampling pump.

5. Rinse with 1 gallon of tap water.
6. Rinse with 1 gallon of distilled water or triple rinse with potable water.
7. Keep decontaminated pump in decontamination tube or remove and wrap in aluminum foil, clean plastic sheeting, or clean plastic garbage bag.
8. Collect all rinsate.
9. Soil or sediment should be rinsed from decontamination materials (e.g., plastic sheeting, tubing, etc.) and PPE. Solid waste can then be disposed of as municipal waste.

Sampling Equipment Decontamination—Other Equipment

Reusable sampling equipment is decontaminated after each use as follows.

1. Don phthalate-free gloves.
2. Rinse and scrub with potable water.
3. Wash all equipment surfaces that contacted the potentially-contaminated soil/water with Alconox solution.
4. Rinse with potable water.
5. Rinse with distilled water or triple rinse with potable water.
6. Air dry.
7. Completely air dry and wrap exposed areas with aluminum foil (shiny side out), plastic sheeting, or clean plastic garbage bag for transport and handling if equipment will not be used immediately.
8. Collect all rinsate.
9. Soil or sediment should be rinsed from decontamination materials (e.g., plastic sheeting, tubing, etc.) and PPE. Solid waste can then be disposed of as municipal waste.

Sample Container Decontamination

The outsides of sample bottles or containers filled in the field may need to be decontaminated before being packed for shipment or handled by personnel without hand protection. The procedure is:

1. Wipe container with a paper towel dampened with Alconox solution or immerse in the solution **after the containers have been sealed**. Repeat the above steps using potable water.
2. Dispose of all used paper towels appropriately.

Heavy Equipment and Tools

Heavy equipment such as drilling rigs, drilling rods/tools, and the backhoe will be decontaminated prior to arrival at the site and between locations as follows:

1. The subcontractor will set up a decontamination area designated by the field team leader.
2. Steam clean heavy equipment until no visible signs of dirt are observed.
3. Observe guidelines described in the guidelines section of this SOP.

Investigation Derived Waste Decontamination

Soil and water generated during decontamination activities will be contained and managed as detailed in Section 6.4 of the FSP.

Key Checks and Items

- Clean with solutions of Alconox, and distilled water.
- If necessary, decontaminate filled sample bottles before relinquishing them to anyone.

The effectiveness of field cleaning procedures will be monitored by collecting and analyzing equipment blanks. Equipments blanks will be collected by rinsing decontaminated equipment with organic-free water and submitting the rinse water in standard sample containers for analysis.

At least one piece of field equipment shall be selected for this procedure each time equipment is washed. An attempt should be made to select different pieces of equipment for this procedure.

Appendix B
GPS Coordinates for Sample Locations

Table B-1
GPS Coordinates for Solid Matrix Samples
Halaco Site Remedial Investigation
Coordinate System: NAD 83 UTM Zone 11 North

Area	Subarea	No. of Sample Locations	Location	Easting	Northing
Smelter Percel	North Area	12	SPN-1	298651.1274	3779824.042
			SPN-2	298675.0644	3779823.209
			SPN-3	298706.6931	3779822.488
			SPN-4	298732.0716	3779823.152
			SPN-5	298767.9617	3779823.319
			SPN-6	298732.4606	3779805.792
			SPN-7	298766.4116	3779806.566
			SPN-8	298700.6602	3779799.22
			SPN-9	298725.376	3779794.243
			SPN-10	298756.7269	3779798.39
			SPN-11	298794.3861	3779820.885
			SPN-12	298793.22	3779785.618
	Parking Area	4	SPP-1	298657.0596	3779795.249
			SPP-2	298672.1688	3779794.907
			SPP-3	298656.7836	3779780.67
			SPP-4	298672.1213	3779780.772
	Smelter and SE Area	27	SPS-1	298789.4048	3779545.426
			SPS-2	298763.6938	3779591.54
			SPS-3	298737.0023	3779611.545
			SPS-4	298707.9114	3779627.417
			SPS-5	298684.0242	3779640.132
			SPS-6	298659.972	3779655.171
			SPS-7	298637.6896	3779672.7
			SPS-8	298663.108	3779671.263
			SPS-9	298793.3867	3779602.2
			SPS-10	298765.8502	3779646.612
			SPS-11	298740.6367	3779654.906
			SPS-12	298796.3717	3779672.489
			SPS-13	298760.4947	3779671.046
			SPS-14	298722.8547	3779668.38
			SPS-15	298676.7273	3779673.753
			SPS-16	298762.0424	3779688.402
			SPS-17	298670.3094	3779701.118
			SPS-18	298637.1289	3779712.631
			SPS-19	298762.5956	3779710.463
			SPS-20	298723.3332	3779717.155
			SPS-21	298797.367	3779734.693
			SPS-22	298725.3842	3779732.139
			SPS-23	298674.3452	3779734.076
			SPS-24	298640.8379	3779732.583
			SPS-25	298769.4995	3779753.106
			SPS-26	298731.9588	3779756.742
			SPS-27	298703.0961	3779764.319
Waste Management Area	WMU	9	WMU-01	298896.343	3779604.961
			WMU-02	298944.4041	3779602.184
			WMU-03	298988.4287	3779595.702
			WMU-04	298888.5201	3779549.551
			WMU-05	298931.6709	3779547.506
			WMU-06	298985.8755	3779541.024
			WMU-07	298902.6824	3779506.827
			WMU-08	298965.9696	3779504.965
			WMU-09	298972.9661	3779453.374

Table B-1
GPS Coordinates for Solid Matrix Samples
Halaco Site Remedial Investigation
Coordinate System: NAD 83 UTM Zone 11 North

Area	Subarea	No. of Sample Locations	Location	Easting	Northing
	WDA	6	WDA-1	298880.9049	3779782.951
			WDA-2	298931.1709	3779786.697
			WDA-3	298997.7764	3779781.752
			WDA-4	298879.8822	3779733.648
			WDA-5	298929.0573	3779728.811
			WDA-6	298994.5717	3779720.14
	North of WDA	4	WNO-1	298847.5905	3779840.935
			WNO-2	298924.1765	3779835.251
			WNO-3	298978.6069	3779836.026
			WNO-4	299036.6606	3779834.734
	East Bank of OID	6	ODE-1	298817.9628	3779502.695
			ODE-2	298821.6444	3779560.28
			ODE-3	298822.5042	3779627.956
			ODE-4	298822.8087	3779680.616
			ODE-5	298823.4571	3779737.069
			ODE-6	298827.0119	3779791.266
NCL East	NCL East	65	NEL-1	299060.9531	3779802.468
			NEL-2	299060.9531	3779754.697
			NEL-3	299059.1019	3779714.966
			NEL-4	299060.3187	3779657.755
			NEL-5	299058.1892	3779613.036
			NEL-6	299056.9723	3779571.662
			NEL-7	299055.7554	3779528.474
			NEL-8	299053.0174	3779477.963
			NEL-9	299052.7379	3779436.432
			NEL-10	299048.4781	3779394.143
			NEL-11	299048.1739	3779348.809
			NEL-12	299109.9709	3779802.304
			NEL-13	299109.0104	3779759.586
			NEL-14	299102.3969	3779706.644
			NEL-15	299105.3702	3779660.269
			NEL-16	299102.1381	3779618.771
			NEL-17	299108.8437	3779579.315
			NEL-18	299107.9293	3779526.067
			NEL-19	299099.9758	3779486.962
			NEL-20	299097.7042	3779434.98
			NEL-21	299096.0134	3779389.168
			NEL-22	299101.7126	3779348.326
			NEL-23	299097.0946	3779299.421
			NEL-24	299160.2447	3779799.744
			NEL-25	299160.9924	3779750.793
			NEL-26	299159.5144	3779704.907
			NEL-27	299158.9508	3779663.881
			NEL-28	299148.1161	3779612.554
			NEL-29	299155.9775	3779577.883
			NEL-30	299147.5985	3779526.815
			NEL-31	299155.4773	3779481.263
			NEL-32	299150.129	3779428.061
			NEL-33	299149.9623	3779387.127
			NEL-34	299143.5615	3779335.755
			NEL-35	299151.3942	3779298.736
			NEL-36	299152.0038	3779248.048
			NEL-37	299217.8164	3779799.135
			NEL-38	299213.2444	3779757.073
			NEL-39	299211.387	3779705.304
			NEL-40	299214.435	3779656.399
			NEL-41	299214.7858	3779612.508

Table B-1
GPS Coordinates for Solid Matrix Samples
Halaco Site Remedial Investigation
Coordinate System: NAD 83 UTM Zone 11 North

Area	Subarea	No. of Sample Locations	Location	Easting	Northing
			NEL-42	299208.7818	3779571.666
			NEL-43	299206.953	3779523.6
			NEL-44	299213.6691	3779482.066
			NEL-45	299209.936	3779430.03
			NEL-46	299207.4599	3779390.394
			NEL-47	299205.5353	3779340.663
			NEL-48	299205.4975	3779290.493
			NEL-49	299201.8399	3779248.857
			NEL-50	299204.5077	3779203.907
			NEL-51	299316.5606	3779793.385
			NEL-52	299305.283	3779706.761
			NEL-53	299296.1407	3779610.47
			NEL-54	299295.5348	3779534.418
			NEL-55	299304.3889	3779419.458
			NEL-56	299299.875	3779331.176
			NEL-57	299288.9022	3779239.809
			NEL-58	299288.0836	3779166.5
			NEL-59	299388.9924	3779703.2
			NEL-60	299397.487	3779613.829
			NEL-61	299385.3093	3779516.752
			NEL-62	299375.6596	3779423.516
			NEL-63	299393.2045	3779340.111
			NEL-64	299389.7762	3779233.333
			NEL-65	299371.8511	3779142.27
NCL North	Background	6	NNB-1	298873.8055	3780303.195
			NNB-2	298918.7305	3780296.576
			NNB-3	298958.169	3780303.116
			NNB-4	298864.2194	3780242.537
			NNB-5	298902.1602	3780242.795
			NNB-6	298945.3754	3780232.499
	Pond	2	NNP-1	298863.0991	3779864.076
			NNP-2	298894.6612	3779865.858
	Ditch north of WDA	4	NND-1	298950.5832	3779844.454
			NND-2	299022.6829	3779840.076
			NND-3	299071.0537	3779840.076
			NND-4	299123.9552	3779839.086
	Land	4	NNL-1	299076.2909	3779897.049
			NNL-2	299178.7951	3779891.682
			NNL-3	299261.0695	3779891.357
			NNL-4	299357.292	3779888.912
Hueneme Parcel	East of Site	4	HUP-1	298451.8628	3779861.246
			HUP-2	298588.4507	3779857.999
			HUP-3	298527.9373	3779843.785
			HUP-4	298599.5949	3779775.868
OID	Through Site	7	OID-1	298809.9639	3779502.696
			OID-2	298813.9946	3779564.396
			OID-3	298817.2192	3779626.273
			OID-4	298817.2192	3779663.12
			OID-5	298818.0254	3779717.368
			OID-6	298818.8315	3779763.652
			OID-7	298826.0869	3779817.379
	North of Site	7	OID-8	298851.9814	3779894.887
			OID-9	298897.9434	3779996.142
			OID-10	298974.6619	3780084.956
			OID-11	299045.16	3780169.968
			OID-12	299101.2376	3780249.473
			OID-13	299152.9807	3780322.023

Table B-1
GPS Coordinates for Solid Matrix Samples
Halaco Site Remedial Investigation
Coordinate System: NAD 83 UTM Zone 11 North

Area	Subarea	No. of Sample Locations	Location	Easting	Northing
			OID-14	299255.9632	3780399.433
Lagoon	Lagoon, main area	10	LGM-1	298720.5887	3779556.012
			LGM-2	298755.5864	3779510.998
			LGM-3	298779.1623	3779472.753
			LGM-4	298688.584	3779530.239
			LGM-5	298710.2676	3779502.565
			LGM-6	298722.9807	3779463.165
			LGM-7	298615.5827	3779515.989
			LGM-8	298664.8896	3779493.336
			LGM-9	298690.9717	3779446.362
			LGM-10	298718.0868	3779399.451
	Lagoon, fingers	12	LGF-1	298352.7308	3779871.548
			LGF-2	298439.4308	3779811.413
			LGF-3	298518.8328	3779746.315
			LGF-4	298643.4823	3779642.392
			LGF-5	298206.4983	3779872.121
			LGF-6	298174.4307	3779828.941
			LGF-7	298312.5435	3779742.581
			LGF-8	298430.9712	3779652.728
			LGF-9	298512.3062	3779588.14
			LGF-10	298801.9473	3779307.192
			LGF-11	298895.1572	3779220.292
			LGF-12	298989.755	3779141.869
Railroad Loading Dock	Loading dock	6	RLD-1	298681.1059	3780383.491
			RLD-2	298680.1915	3780375.65
			RLD-3	298697.6283	3780384.502
			RLD-4	298698.0072	3780372.759
			RLD-5	298714.4925	3780374.721
			RLD-6	298714.8344	3780382.295
McWane Blvd East	Road	4	MBR-1	299088.5293	3779833.442
			MBR-2	299150.0953	3779833.442
			MBR-3	299202.8765	3779832.15
			MBR-4	299239.9291	3779831.117
	South of road	4	MBS-1	299089.0461	3779825.433
			MBS-2	299149.8369	3779826.725
			MBS-3	299201.5846	3779825.949
			MBS-4	299237.6038	3779825.174
Wetland	Background	6	WLB-1	298123.7149	3779953.346
			WLB-2	298149.9248	3779936.443
			WLB-3	298179.9095	3779916.188
			WLB-4	298097.704	3779915.461
			WLB-5	298125.133	3779900.644
			WLB-6	298157.4389	3779883.918
	West Area	12	WLW-1	298316.9379	3779862.261
			WLW-2	298407.8867	3779807.273
			WLW-3	298470.3317	3779757.614
			WLW-4	298539.5721	3779699.522
			WLW-5	298607.3779	3779643.082
			WLW-6	298669.1678	3779589.275
			WLW-7	298278.0674	3779785.17
			WLW-8	298365.8977	3779762.126
			WLW-9	298436.7253	3779719.803
			WLW-10	298507.663	3779646.926
			WLW-11	298575.8833	3779631.418
			WLW-12	298621.574	3779563.143
	East Area	8	WLE-1	298818.9893	3779410.93
			WLE-2	298885.4652	3779357.979

Table B-1
GPS Coordinates for Solid Matrix Samples
Halaco Site Remedial Investigation
Coordinate System: NAD 83 UTM Zone 11 North

Area	Subarea	No. of Sample Locations	Location	Easting	Northing
			WLE-3	298953.0906	3779305.817
			WLE-4	299012.9013	3779260.891
			WLE-5	298820.1681	3779361.471
			WLE-6	298893.1293	3779299.846
			WLE-7	298959.5905	3779248.599
			WLE-8	299036.1395	3779187.57
	Ditch south of WMU	8	DSA-1	298825.0636	3779477.922
			DSA-2	298854.2607	3779460.302
			DSA-3	298880.3981	3779419.817
			DSA-4	298906.2912	3779393.738
			DSA-5	298949.346	3779364.45
			DSA-6	298979.3329	3779341.071
			DSA-7	299005.9417	3779315.5
			DSA-8	299056.9784	3779320.067
	5' south of Ditch	8	DSB-1	298822.274	3779475.298
			DSB-2	298850.8473	3779456.802
			DSB-3	298877.4914	3779416.958
			DSB-4	298903.7507	3779391.013
			DSB-5	298946.6181	3779361.55
			DSB-6	298976.1972	3779337.726
			DSB-7	299002.9575	3779312.503
			DSB-8	299054.0364	3779316.725
	15' south of Ditch	8	DSC-1	298819.3801	3779472.559
			DSC-2	298847.829	3779453.491
			DSC-3	298874.5054	3779413.6
			DSC-4	298900.7192	3779387.977
			DSC-5	298943.5273	3779358.158
			DSC-6	298973.2202	3779334.507
			DSC-7	299000.0636	3779309.402
			DSC-8	299050.4487	3779312.834
Beach Dunes	Background	6	BBG-1	297970.2637	3779877.189
			BBG-2	298031.2765	3779846.349
			BBG-3	298083.626	3779815.544
			BBG-4	297966.4545	3779842.926
			BBG-5	298012.6265	3779813.715
			BBG-6	298067.1683	3779775.947
	Breaches	6	BBR-1	298587.1749	3779408.913
			BBR-2	298614.6532	3779383.426
			BBR-3	298648.9016	3779361.125
			BBR-4	299063.4645	3779023.03
			BBR-5	299087.6036	3779005.458
			BBR-6	299116.8901	3778979.899

Table B-2
GPS Coordinates for Soil Gas Matrix Samples
Halaco Site Remedial Investigation

Area	No. of Sample Locations	Location	Easting	Northing
WMU	2	WSG-1	298945.7284	3779579.549
		WSG-2	298947.1087	3779517.451
Smelter Parcel	6	SSG-1	298786.0985	3779544.062
		SSG-2	298790.207	3779602.165
		SSG-3	298793.2547	3779670.054
		SSG-4	298711.07	3779624.156
		SSG-5	298719.1484	3779666.717
		SSG-6	298725.6453	3779718.092

Table B-3
GPS Coordinates for Water Matrix Samples
Halaco Site Remedial Investigation

Matrix	Area	No. of Sample Locations	Location	Easting	Northing
Surface Water	Oxnard Industrial Drain	8	OID-1	298811.3383	3779532.721
			OID-2	298816.1008	3779614.636
			OID-3	298818.0058	3779714.648
			OID-4	298834.1983	3779846.094
			OID-5	298919.8861	3780025.621
			OID-6	299162.001	3780335.432
			OID-7	299341.9943	3780462.065
			OID-8	299964.8527	3781037.767
	Lagoon	2	LAG-1	298737.0431	3779449.853
			LAG-2	298697.038	3779560.343
	Ditch south of WMU	2	WMU-1	298880.8709	3779426.993
			WMU-2	299005.6487	3779327.933
	NCL East	3	NCE-1	299086.4242	3779589.402
			NCE-2	299130.4264	3779433.66
			NCE-3	299215.1991	3779254.59
	Hueneme Drain	1	HUD-1	298158.7096	3779999.055
	J Street Drain	1	JSD-1	298268.0547	3779942.759
	Ocean surf line	2	OCE-1	298644.6504	3779293.643
			OCE-2	298513.2052	3779381.273
Ground-water	Existing wells	18	MW-1R	299026.3606	3779309.259
			MW-2RA	299050.6058	3779511.987
			MW-2RB	299050.3612	3779511.389
			MW-3RA	298965.5717	3779346.818
			MW-3RB	298964.8878	3779347.172
			MW-4RA	298957.2507	3779828.21
			MW-4RB	298956.4605	3779828.426
			MW-5	298831.2939	3779500.733
			MW-6	298838.5113	3779615.086
			MW-11	298683.7234	3779665.228
			MW-12	298770.0438	3779600.772
			MW-13	298742.6348	3779807.401
			MW-14	298611.9854	3779687.382
			MW-15	298648.8912	3779845.753
			MW-16	299049.821	3779670.749
			MW-17	298917.7158	3779541.235
			MW-18	298968.367	3779607.853
			MW-19	298964.9546	3779673
	New wells, shallow	8	MW-20	298724.5993	3779728.895
			MW-21	298651.4725	3779716.448
			MW-22	298624.5037	3779776.091
			MW-23	298492.2531	3779887.078
			MW-24	298954.3524	3779804.615
			MW-25	299113.5718	3779798.91
			MW-26	299270.198	3779719.041
			MW-27	299391.0388	3779543.226
	New wells, medium and deep	4	MW-2C and -2D	299025.9233	3779518.85
			MW-3C and -3D	298955.3897	3779392.823
			MW-6C and -6D	298834.5489	3779559.822
			MW-19C and -19D	298939.8308	3779672.365
	New piezometers	4	PZ-1A, -1B, and -1C	298672.8418	3779846.344
			PZ-2A, -2B, and -2C	298743.9204	3779845.515
			PZ-3A, -3B, and -3C	298880.3126	3779823.541
			PZ-4A, -4B, and -4C	298989.9955	3779822.454

Table B-4
GPS Coordinates for Air Matrix Samples
Halaco Site Remedial Investigation

Area	Subarea	No. of Sample Locations	Location	Easting	Northing
Upwind	West of Smelter Parcel	1	UPW-1	298489.225	3779776.747
Onsite	East edge of Smelter Parcel	1	SMP-1	298792.7471	3779608.749
	East edge of WMU	1	WMU-1	299042.8747	3779576.562
Downwind	NCL-E	1	NCE-1	299354.0253	3779578.149
	NCL-N	1	NCN-1	299326.244	3779852.787

Table B-5
GPS Coordinates for Geotechnical Samples
Halaco Site Remedial Investigation

Area	Subarea	No. of Sample Locations	Location	Easting	Northing
Smelter Parcel	Smelter Area, CPT	2	SCP-1	298762.8119	3779587.586
			SCP-2	298719.5387	3779663.581
	Smelter Area, geotechnical	2	SGT-1	298766.7435	3779586.828
			SGT-2	298721.1441	3779660.349
Waste Management Area	Top of WMU, CPT, shallow	2	WCP-1	298949.419	3779579.326
			WCP-2	298950.8222	3779517.719
	Edges of WMU, CPT, deep	2	WCP-3	298952.8071	3779677.148
			WCP-4	298944.8559	3779400.259
	WMU, geotechnical	2	WGT-1	298946.9264	3779575.79
			WGT-2	298949.0653	3779513.914
Lagoon	Lagoon, geotechnical	4	LGT-1	298718.7599	3779558.45
			LGT-2	298667.0232	3779493.031
			LGT-3	298775.1999	3779473.363
			LGT-4	298693.1053	3779445.143

Appendix C
U.S. EPA Region IX Instructions for Sample Shipping and Documentation

INSTRUCTIONS FOR

SAMPLE SHIPPING

AND DOCUMENTATION

November 1997

Quality Assurance Management Section
U. S. EPA Region 9
San Francisco, CA

TABLE OF CONTENTS

1.0 GENERAL 1
1.3 DISTRIBUTION OF COPIES 1

2.0 SAMPLE SHIPMENTS 2

3.0 CLP ANALYTICAL SERVICES (CLPAS) TRAFFIC REPORT/CHAIN-OF-CUSTODY FORMS FOR ORGANIC AND INORGANIC ANALYSES 3
3.1 CASE DOCUMENTATION 3
3.2 HEADER INFORMATION 4
3.3 SAMPLE DOCUMENTATION 5
3.4 "SHIPMENT FOR CASE COMPLETE (Y/N)" 7
3.5 "PAGE 1 OF __" 7
3.6 "SAMPLE USED FOR SPIKE AND/OR DUPLICATE" 7
3.7 "ADDITIONAL SAMPLER SIGNATURES" 7
3.8 "CHAIN OF CUSTODY SEAL NUMBER" 7

4.0 REGIONAL ANALYTICAL PROGRAM (RAP) CHAIN-OF-CUSTODY FORMS 7
4.1 CASE DOCUMENTATION 7
4.2 SAMPLE DOCUMENTATION 8
4.3 AIRBILL NUMBER 9
4.4 "REMARKS" BOX 9

5.0 SAMPLE BOTTLES 9

6.0 FIELD QA/QC SUMMARY FORM 10

FIGURES

TYPE OF ACTIVITY ..... Appendix A
CLP SAMPLE NUMBERS ..... Appendix B
ORGANIC TRAFFIC REPORT & CHAIN OF CUSTODY RECORD ..... Attachment 1
INORGANIC TRAFFIC REPORT & CHAIN OF CUSTODY RECORD ..... Attachment 2
(REGIONAL) CHAIN OF CUSTODY RECORD ..... Attachment 3
FIELD QA/QC SUMMARY FORM ..... Attachment 4
SAMPLE SHIPMENT INFORMATION ..... Attachment 5

1.0 GENERAL

1.1 When all paperwork has been completed by the sampler and samples are ready to be shipped, place the laboratories' copies in a plastic bag and tape it to the inside of the lid of the cooler(s). For CLP Analytical Services, Contract Laboratory Analytical Services Support's (CLASS) copies must be submitted within 5 days of sampling. The Region's copies may be submitted at that time or at the end of the sampling event. If the sampling event covers an extended length of time, the Region's copies must be submitted weekly. (Note: The RSCC coordinator will not forward CLASS's copies. They will be returned to the sampler.)

QAMS address:

U.S. EPA Region 9
Quality Assurance Program (PMD-3)
75 Hawthorne Street
San Francisco, CA 94105
Attn.: RSCC Coordinator

CLASS address:

Contract Laboratory Analytical Services Support
DynCorp
2000 Edmund Halley Dr.
Reston, VA 20191-3436
Attn.: Region 9 Coordinator

1.2 For analyses performed by the Regional Laboratory, DO NOT send any copies of the paperwork to the Contract Laboratory Analytical Services Support (CLASS).

1.3 DISTRIBUTION OF COPIES

1.3.1 CLP ANALYTICAL SERVICES

1.3.1.1 ORGANIC TRAFFIC REPORT/CHAIN-OF-CUSTODY FORM

a. Blue (original) copy to QAMS, Region 9
b. Pink (second) copy to CLASS
c. White (third) and Yellow (fourth) copies accompany samples to laboratory
d. Photocopy for sampler's files

1.3.1.2 INORGANIC TRAFFIC REPORT/CHAIN-OF-CUSTODY FORM

a. Green (original) copy to QAMS, Region 9
b. Pink (second) copy to CLASS
c. White (third) and Yellow (fourth) copies accompany samples to laboratory
d. Photocopy for sampler's files

1.3.2 REGIONAL ANALYTICAL PROGRAM (RAP):

1.3.2.1 RAP CHAIN-OF-CUSTODY FORM

a. White (original) copy to laboratory with samples
b. Pink copy to QAMS, Region 9
c. Photocopy for sampler's file

1.3.3 FIELD QA/QC SUMMARY FORM

a. Original to QAMS, Region 9
b. Photocopy for sampler's files

2.0 SAMPLE SHIPMENTS

2.1 Calling in shipments to the RSCC coordinator

2.1.1 Call the EPA Regional Sample Control Center (RSCC) coordinator on a daily basis, even if no shipments were made. The RSCC coordinator may be reached at (415) 744-1498.

2.1.2 Try to stick to the sampling schedule. If this is not possible, let the RSCC coordinator know immediately so other arrangements can be made.

2.1.3 Notify the RSCC coordinator within 12 hours of sample shipments. Calling in sample shipments to the RSCC coordinator is MANDATORY. Provide the following information to the RSCC coordinator:

1. Case number
2. Name of Laboratory
3. Date of shipment
4. Carrier and airbill number
5. Number of samples shipped by matrix and analysis type
6. Number of coolers shipped
7. Information on completions, changes, delays, etc.

2.2 Special shipments (i.e., Saturday delivery/pickup)

2.2.1 General - Friday shipments for Saturday delivery/pickup must be called in by noon (12:00 pm) Friday. This is to enable the RSCC coordinator to pass the information on to CLASS or to the laboratories. Samplers may not contact the laboratories directly. (Laboratories do not have to accept notification of delivery of samples from sources other than CLASS or RSCC.)

2.2.2 Regional Laboratory - The Regional Laboratory is located within a gated compound that is closed on weekends and holidays. Designated laboratory personnel will pickup the samples at the Federal Express office, take them to the laboratory and place them inside the refrigerators. If the following shipping instructions are not followed, an unsuccessful delivery attempt will be made to the Regional Laboratory. In addition, the staff member on call will not be able to pickup the samples, since they will not be at the Federal Express office.

To ensure that samples are held at the Federal Express office, please be sure to complete the following items:

1. On the lower left side of the Federal Express airbill, "For HOLD at FedEx Location check here," mark the box for "Hold Saturday."

2. In Section 3 of the airbill, print the following Federal Express office address:

1600 63rd Street
Emeryville, CA 94608

Federal Express may affix stickers to the coolers. Be sure they read "SATURDAY FEDERAL EXPRESS CENTER HOLD" or something similar. Under no circumstances should a "SATURDAY DELIVERY" sticker be placed on the cooler.

If a carrier other than Federal Express is used, please call the RSCC coordinator (415-744-1498) to make special arrangements.

2.2.3 Most CLP laboratories and other commercial laboratories contracted by QAP are staffed on Saturdays. Therefore, coolers can be delivered directly to these laboratories. In this case, the "SATURDAY DELIVERY" sticker should be placed on the cooler.

2.2.4 Laboratories may request advance notification of the arrival of certain types of samples, such as samples with very short holding times (e.g., Cr +6) that will be hand delivered to the laboratory. Required deadlines for notification of sample shipments in these special cases will be determined on a case by case basis. The RSCC coordinator will inform the samplers as to when notification of sample delivery is required (e.g., by noon on the day samples will be delivered). This is to facilitate the laboratory(ies) having personnel available to analyze the samples as soon as they arrive.

2.3 Cooler Return

Samplers are responsible for providing laboratories with a means to return coolers to their place of origin. The easiest way is to enclose an airbill with return shipping instructions (i.e., the address filled in as to where the coolers are to be returned to) and an account number to charge shipping costs to.

Samplers using EMFAC coolers should refer to Section 7 of the EMFAC Users Guide for cooler return instructions. EPA contractors should contact their EPA Project Officer for details on acceptable modes of cooler return and shipping cost reimbursement.

3.0 CLP ANALYTICAL SERVICES (CLPAS) TRAFFIC REPORT/CHAIN-OF-CUSTODY FORMS FOR ORGANIC AND INORGANIC ANALYSES

3.1 CASE DOCUMENTATION

Complete this form when collecting CLPAS samples. See Attachments 1 through 3 for examples.

Enter the CLPAS case number in the box(es) located in the upper right corner of the form. CLPAS case numbers have the format "xxxxx" (e.g., 18123).

3.2 HEADER INFORMATION

3.2.1 Box 1 - PROJECT CODE/SITE INFORMATION

Enter the Project Code (i.e., $F), Site Name, City, State, Site Spill ID. **(Note: the information entered here does not go through to the laboratory's copies.)**

If sampling is not under the Superfund program, enter the Account code (account to be billed), any Regional Information and the name of the program (e.g., RCRA) in the box titled "Non-Superfund program."

3.2.2 Box 2 - REGIONAL INFORMATION

Enter the Region number, the name of your sampling company, and your name and signature in the designated spaces.

3.2.3 Box 3 - TYPE OF ACTIVITY

Check the appropriate box(es) for the type of activity for this sampling event. See Appendix A for acronym definitions.

3.2.4 Box 4 - SHIPPING INFORMATION

Enter the date shipped, the carrier (e.g., Federal Express, Airbourne, etc.) and the air bill number in the appropriate spaces.

3.2.5 Box 5 - SHIP TO

Enter the laboratory name, full address and laboratory contact (e.g., Sample Custodian).

3.2.6 Box 6 - PRESERVATIVE

This box provides a list of commonly used preservatives. Enter the appropriate preservative in Column D. If you enter "5" on the Organic Traffic Report or "7" on the Inorganic Traffic Report indicating "Other", specify the preservative used at the bottom of the "Sample Documentation" area.

If you are using more than one type of preservative, you may either note the preservatives in the box specifically under the requested analyses (e.g., in the Cyanide box enter "2") or list them, separated by commas, in the same order as the checked sample analyses. (Alternatively, the analyses may be listed on separate lines.)

3.2.7 Box 7 - SAMPLE DESCRIPTION

This box provides a list of the description/matrices of the samples that are collected. Enter the appropriate description in Column A.

3.3 SAMPLE DOCUMENTATION

3.3.1 SAMPLE NUMBERS

Carefully transcribe the CLPAS sample numbers from the printed labels onto the Organic or Inorganic Traffic Report/Chain-of-Custody forms in the column labeled "CLP Sample Numbers".

CLPAS sample numbers have the following formats: YX123 for organic and MYX123 for inorganic samples. See Appendix B for examples.

3.3.2 Column A - SAMPLE DESCRIPTION

Enter the appropriate sample description code from Box 7.

Note: Item #6 "Oil" and Item #7 "Waste" are for RAP projects only. Do not ship oily samples or waste samples without making prior arrangements with the EPA.

3.3.3 Column B - CONCENTRATION

Enter "L" for low and "M" for medium concentration samples. (Prior arrangements must have been made with the ESAT RSCC coordinator, CLASS and the laboratories accepting the samples before shipping medium concentration samples. At this time, high concentration samples must be scheduled through the RAP system.)

NOTE: Medium concentration samples must be shipped in metal cans.

3.3.4 Column C - SAMPLE TYPE COMPOSITE/GRAB

Enter the type of sample you collected. A composite is a sample composed of more than one discrete sample. A grab is a discrete sample.

3.3.5 Column D - PRESERVATIVE USED

Enter the preservative used from Box 6.

3.3.6 Column E - CLPAS ANALYSIS

Check the analytical fractions requested for each sample, for example, VOAs; BNAs and Pesticides/PCBs are for low/medium concentration organics. Total metals and cyanide are for low/medium concentration inorganics.

NOTE: If dissolved metals are requested, a note must be added indicating that the samples have been field filtered and that digestion is required. See Attachment 2 for an example.

3.3.7 Column F - REGIONAL SPECIFIC TRACKING NUMBERS OR TAG NUMBERS

Region 9 does not issue tracking numbers or tag numbers. Samplers may use this column for sampler specific tracking numbers or for "Special Instructions". If you choose to use this as "Special Instructions", be sure to note, at the bottom of the "Sample Documentation" area, what the special

handling is. The number and type of containers could be entered here. (e.g., 3-40 mL, 6-1L)

3.3.8 Column G - STATION LOCATION NUMBER

Enter the station location in the space provided.

3.3.9 Column H - MO/DAY/YEAR/TIME OF SAMPLE COLLECTION

Record the month, day, year and time (use military time, e.g., 1600 = 4:00 pm) of sample collection.

3.3.10 Column I - SAMPLER INITIALS

Enter your initials.

3.3.11 Column J - CORRESPONDING CLP ORGANIC/INORGANIC SAMPLE NUMBER

Enter the corresponding CLP sample number for organic or inorganic CLPAS analysis.

3.3.12 Column K - DESIGNATED FIELD QC

NOTE: This column is NOT to be used for the designated laboratory QC samples. **Information entered here is not reproduced onto the laboratories' copies.**

Enter the appropriate qualifier as listed below for "Blind" Field QC samples in this column. (NOTE: All samples must have a qualifier.)

Blind Field QC	Qualifier
Blind Blanks (field, etc.)	B
Blind Field Duplicates	D
Blind Field Spikes	S
Blind PE Samples	PE
All other field samples	–

"B" = These are blanks and include trip blanks (T), field blanks (F) and equipment blanks (E). Blanks may be further identified by the letter in parenthesis. For example, B(T) indicates that the sample is a trip blank.

"D" = These are field duplicates. Do not include samples designated as laboratory duplicates. The primary sample is identified with "--" and the duplicate is given "D" in column K. In addition, the station locations should also identify the primary and duplicate samples. For example, MW-1 is the primary sample and MW-1B is the duplicate sample.

"S" = These are spiked field samples and are generated by field personnel

"PE" = These are performance evaluation samples. They are spiked samples but are not field samples. They are usually prepared by other than field personnel.

"–" = All other samples not designated as blind field QC samples are given this qualifier.

3.4 "SHIPMENT FOR CASE COMPLETE (Y/N)"

This should reflect the status of the samples scheduled to be shipped to a laboratory for a specific case. Only when ALL samples scheduled for shipment to a laboratory for a specific case have been shipped is the case complete.

3.5 "PAGE 1 OF __"

Enter the number of Traffic Report/Chain-of-Custody Record form(s) enclosed in each cooler. The form(s) accompanying each cooler must list only those samples contained in that cooler.

3.6 "SAMPLE USED FOR SPIKE AND/OR DUPLICATE"

Enter the sample number of the sample designated for laboratory spike and/or duplicate analysis. This is also known as the Laboratory QC sample. This sample should be included in the first shipment to the laboratory and in the first shipment for each subsequent sample delivery group (SDG).

DO NOT enter samples designated as blind field duplicates in this block.

3.7 "ADDITIONAL SAMPLER SIGNATURES"

Record additional sampler signatures that are different from that in Box 2.

3.8 "CHAIN OF CUSTODY SEAL NUMBER"

Enter the Chain of Custody Seal Number used to seal the cooler, if applicable.

3.9 Instructions summarizing CLP sample volumes, packaging and shipment reporting requirements are printed on the back of the Traffic Reports.

4.0 REGIONAL ANALYTICAL PROGRAM (RAP) CHAIN-OF-CUSTODY FORMS

4.1 CASE DOCUMENTATION

Complete this form when collecting RAP samples. See Attachment 4 for an example.

4.1.1 PROJECT NUMBER

Enter the RAP case number in this box.

4.1.2 PROJECT NAME

Leave this space blank.

4.1.3 SAMPLERS (Signature)

Record all sampler signatures in this box.

4.2 SAMPLE DOCUMENTATION

4.2.1 SAMPLE NUMBERS

No sample numbers are provided. Samplers should designate their own numbers and enter them in the space labeled STA.NO.

4.2.2 DATE

Enter the month, day and year the sample was collected in the "DATE" column.

4.2.3 TIME

Enter the time (using military time) in the "TIME" column.

4.2.4 COMP/GRAB

Check the kind of sample collected in the composite or grab column.

4.2.5 STATION LOCATION

Enter the sample site location in the space provided.

4.2.6 SAMPLE MATRIX

For each sample, enter the appropriate sample matrix description in the right third portion of the "STATION LOCATION" column.

4.2.7 NO. OF CONTAINERS

Enter the total number of sample containers collected for each matrix at each station location.

4.2.8 SAMPLE ANALYSES

There are six slanted columns to be used to specify the kind of analysis to be performed by the laboratory. Enter the appropriate analysis in each column. Mark the box of the appropriate analysis for each sample collected.

4.2.9 REMARKS

The items listed below are to be included in this area on the appropriate sample line.

4.2.9.1 CONCENTRATION

Enter "L" for low concentration, "M" for medium concentration and "H" for high concentration.

NOTE: Medium and high concentration samples must be shipped in metal cans.

4.2.9.2 PRESERVATIVE USED

Enter the preservative used.

If more than one type of preservative is used for a sample, separate the preservative references with commas. The sequence of the reference numbers must follow the sequence of the requested "RAP Analysis" parameters that are recorded in the analysis columns.

4.2.9.3 SAMPLE USED FOR SPIKE AND/OR DUPLICATE

Enter the sample number designated for spike and/or duplicate analysis. This is also known as the Laboratory QC sample. This sample should be included in the first shipment to the laboratory and in the first shipment for each subsequent sample delivery group (SDG).

4.3 AIRBILL NUMBER

The airbill number should be entered on the first signature line, in the box marked "Received by: (Signature)".

4.4 "REMARKS" BOX

Located in the lower right hand corner of the Chain of Custody is a box labeled "Remarks". The following items should be entered there.

4.4.1 CHAIN OF CUSTODY SEAL NUMBER

Enter the Chain of Custody Seal Number used to seal the coolers, if applicable, in the box labeled "Remarks", in the lower right-hand corner.

4.4.2 LABORATORY NAME

Enter the Laboratory name in the box labeled "Remarks", in the lower right-hand corner.

4.4.3 SHIPPING COMPLETE?

Enter "yes, shipping is complete" or "No, shipping is not complete" in the box labeled "Remarks", in the lower right-hand corner.

4.4.4 CARRIER

Enter the carrier (e.g., "Fed Ex") in the box labeled "Remarks", in the lower right-hand corner.

5.0 SAMPLE BOTTLES

5.1 Sample bottles be labeled with the following information:

a. Case number

b. Date/Time of collection
c. Matrix/Concentration
d. Station Location
e. Sample number (CLP or sampler designated)
f. Analysis
g. Preservative

5.2 Pre-printed, self-adhesive labels are provided for CLPAS Organic, CLPAS Inorganic and RAP samples.

5.2.1 Transcribe the appropriate sample number onto the corresponding bottle label and/or affix the sample number label onto the bottle.

5.2.2 Destroy all unused labels or return them to the ESAT RSCC coordinator. DO NOT use them for future samplings. New sample numbers will be assigned.

6.0 FIELD QA/QC SUMMARY FORM

6.1 Complete one form per laboratory per matrix for each sampling event. For long term projects, complete a form(s) after each week of sampling. Complete the header portion even if no QA/QC samples were provided.

6.2 Complete all applicable entries. Please use the appropriate sample numbers for each laboratory. (e.g., for the laboratory performing CLPAS organics, use the CLP organic sample numbers, YX123, etc. For the laboratory performing RAP analyses, use the RAP sample numbers, SY0123, etc.) Please do not use station locations. If a laboratory is performing more than one type of analysis, list all applicable sample numbers.

6.3 This form is very important for validation purposes. The validators will compare the results of duplicates and assess the quality of blanks, if they know which samples they are. Failure to provide this information will delay the completion of validation.

Appendix A

TYPE OF ACTIVITY

Check the box which describes the funding lead for this sampling event:

Funding Lead

SF = Superfund
PRP = Potentially Responsible Party
ST = State
FED = Federal

Check one or more boxes, as appropriate, which describe the task of this sampling event:

Pre-Remedial

PA = Preliminary Assessment
SSI = Screening Site Investigation
LSI = Listing Site Investigation

Remedial

RIFS = Remedial Investigation Feasibility Study
RD = Remedial Design
O&M = Operations and Maintenance
NPLD = National Priorities List

Removal

CLEM = Classic Emergency
REMA = Removal Assessment
REM = Removal
OIL = Oil Response
UST = Underground Storage Tank Response

Appendix B

CLP SAMPLE NUMBERS

Each sample is assigned a unique sample number. A "sample" is defined as follows:

- one matrix, e.g., water, soil/sediment, fish, etc.
- one station location
- one analytical program, e.g., CLPAS organics, CLPAS inorganics or a RAP analysis
- one laboratory

Sample numbers for CLPAS analyses:

- CLPAS Organic sample numbers consist of five alpha-numerics, always beginning with "Y"

  Example - YJ386

- CLPAS Inorganic sample numbers consist of six alpha-numerics, always beginning with "MY"

  Example - MYG528

Examples for assigning sample numbers:

- *CLPAS Volatiles & CLPAS Pesticides/PCBs receive the* **SAME SAMPLE NUMBER**, if the samples are:

  - the same matrix
  - part of the same analytical program, e.g., CLPAS organics
  - from the same station location
  - going to the same laboratory

- CLPAS Volatiles & CLPAS Pesticides/PCBs receive **DIFFERENT SAMPLE NUMBERS**, if the samples are:

  - the same matrix
  - part of the same analytical program, e.g., CLPAS organics
  - from the same station location
  - going to different laboratories

- CLPAS Volatiles & CLPAS Metals receive **DIFFERENT SAMPLE NUMBERS**, if the samples are:

  - the same matrix
  - part of different analytical programs, e.g., CLPAS organics & CLPAS inorganics
  - from the same station location
  - going to the same laboratory

EPA

United States Environmental Protection Agency
Contract Laboratory Program Sample Management Office
PO Box 818 Alexandria, VA 22313
703-557-2490 FTS 557-2490

Organic Traffic Report & Chain of Custody Record

(For Organic CLP Analysis)

SAS No. (if applicable)

Case No. 17235

1. Project Code: $F
Account Code:
2. Region No.: 9
Sampling Co.: Ace
4. Date Shipped: 1-7-94
Carrier: Fed. Express

Regional Information
Sampler (Name): Gail Jones
Airbill Number: 0912345678

Non-Superfund Program
Sampler Signature: Gail Jones
5. Ship To: Alpha Lab, 123 Pine Ave, NY, NY 10001
ATTN: John Doe

Site Name: Toxic Dump
3. Type of Activity: Lead / Pre-Remedial / Remedial / Removal
SF [X] PRP [ ] ST [ ] FED [ ]
PA [ ] SS [ ] LSI [ ]
RIFS [X] RD [ ] RA [ ] O&M [ ] NPLD [ ]
CLEM [ ] REMA [ ] REM [ ] DIL [ ] UST [ ]

City, State: Smallville CA
Site Spill ID: 99

6. Preservative (Enter in Column D)
1. HCl
2. HNO_3
3. $NaHSO_4$
4. H_2SO_4
5. Other (Specify)
6. Ice only
N. Not preserved

7. Sample Description (Enter in Column A)
1. Surface Water
2. Ground Water
3. Leachate
4. Rinsate
5. Soil/Sediment
6. Oil (High only)
7. Waste (High only)
8. Other (Specify)

CLP Sample Numbers (from labels)	A Enter # from Box 7	B Conc. Low Med High	C Sample Type: Comp/ Grab	D Preservative from Box 6	E RAS Analysis: VOA	BNA	Pest/ PCB	High only AHCN TOX	F Regional Specific Tracking Number or Tag Numbers	G Station Location Number	H Mo/Day/ Year/Time Sample Collection	I Sampler Initials	J Corresp. CLP Inorg. Samp. No.	K Enter Appropriate Qualifier for Designated Field QC (B = Blank, S = Spike, D = Duplicate, PE = Performance Eval., — = Not a QC Sample)
										MW-1	1-6-94 0900	gr	MYG001	—
YJ126	2	L	G			X				MW-2	1-6-94 1000	gr	MYG003	—
YJ127	2	L	G			X				MW-3	1-6-94 1100	gr	MYG005	—
YJ128	2	L	G			X								

Shipment for Case complete? (Y/N): Y
Page 1 of 1
Sample used for a spike and/or duplicate: YJ127
Additional Sampler Signatures:
Chain of Custody Seal Number:

CHAIN OF CUSTODY RECORD

Relinquished by: (Signature)	Date / Time	Received by: (Signature)	Relinquished by: (Signature)	Date / Time	Received by: (Signature)
Gail Jones	1-7-94 1600	0912345678			
Relinquished by: (Signature)	Date / Time	Received by: (Signature)	Relinquished by: (Signature)	Date / Time	Received by: (Signature)
Relinquished by: (Signature)	Date / Time	Received for Laboratory by: (Signature)	Date / Time	Remarks: Is custody seal intact? Y/N/none	

Split Samples: [ ] Accepted (Signature) [ ] Declined

EPA Form 1313-7, previous edition which may be used

ATTACHMENT 1

1-40

EPA

United States Environmental Protection Agency
Contract Laboratory Program Sample Management Office
PO Box 818 Alexandria, VA 22313
703-557-2490 FTS 557-2490

Inorganic Traffic Report & Chain of Custody Record

(For Inorganic CLP Analysis)

SAS No. (If applicable):

Case No.: 17235

1. Project Code: SF
Account Code:
2. Region No.: 9
Sampling Co.: ACE
4. Date Shipped: 1-7-94
Carrier: Fed. Express
Airbill Number: 0912345699
Regional Information:
Sampler (Name): Gail Jones
Non-Superfund Program:
Sampler Signature: Gail Jones
5. Ship To: Beta Labs, Inc. 455 Maple Ave. Atlanta, GA 04507
ATTN: Mary Smith
Site Name: Toxic Dump
City, State: Smallville CA
Site Spill ID: 99

Type of Activity: Lead / Pre-Remedial / Remedial / Removal
SF [X] FRP [ ] ST [ ] FED [ ]
PA [ ] SSI [ ] LSI [ ]
RIFS [X] RD [ ] RA [ ] O&M [ ] NPLD [ ]
CLEM [ ] REM A [ ] REM [ ] OIL [ ] UST [ ]

6. Preservative (Enter in Column D)
1. HCl
2. HNO_3
3. NaOH
4. H_2SO_4
5. $K_2CR_2O_7$
6. Ice only
7. Other (Specify)
N. Not preserved

7. Sample Description (Enter in Column A)
1. Surface Water
2. Ground Water
3. Leachate
4. Rinsate
5. Soil/Sediment
6. Oil (High only)
7. Waste (High only)
8. Other (Specify)

CLP Sample Numbers (from labels)	A Enter # from Box 7	B Conc. Low Med High	C Sample Type: Comp./Grab	D Preservative from Box 6	E - RAS Analysis: Metals Total	Metals Dissolved	Metals Cyanide	Low Conc. only Metals/Name	Low Conc. only Fluoride	High conc. pH	High conc. Conductivity	F Regional Specific Tracking Number or Tag Numbers	G Station Location Number	H Mo/Day/Year/Time Sample Collection	I Sampler Initials	J Corresp. CLP Org. Samp. No.	K Enter Appropriate Qualifier for Designated Field QC (B = Blank, S = Spike, D = Duplicate, PE = Perform. Eval., — = Not a QC Sample)
													MW-1	1-6-94 0900	JB	YJ126	—
MYG001	2	L	G	2S	X		X					A	MW-1	1-6-94 0915	JB	YJ126	—
MYG002	2	L	G	2		X							MW-2	1-6-94 1000	JB	YJ127	—
MYG003	2	L	G	2S	X		X					A	MW-2	1-6-94 1015	JB	YJ127	—
MYG004	2	L	G	2		X											

A = Field Filtered, 0.45 micron
Digestion required for all dissolved samples

Shipment for Case complete? (Y/N): Y
Page 1 of 1
Samples used for a spike and/or duplicate: MYG003 + MYG004
Additional Sampler Signatures: John Brown
Chain of Custody Seal Number:

CHAIN OF CUSTODY RECORD

Relinquished by: (Signature)	Date / Time	Received by: (Signature)	Relinquished by: (Signature)	Date / Time	Received by: (Signature)
Gail Jones	1-7-94 1600	0912345699			
Relinquished by: (Signature)	Date / Time	Received by: (Signature)	Relinquished by: (Signature)	Date / Time	Received by: (Signature)
Relinquished by: (Signature)	Date / Time	Received for Laboratory by: (Signature)	Date / Time	Remarks: Is custody seal intact? Y/N/none	

Spike Samples [ ] Accepted (Signature)

ATTACHMENT 2

ENVIRONMENTA IOTECTION AGENCY
Office of Enforcement

REGION . .
75 Hawthorne Street
San Francisco, California 94105

CHAIN OF CUSTODY RECORD

PROJ. NO: R94312
PROJECT NAME:
SAMPLERS: (Signature) K. Pettit

STA. NO.	DATE	TIME	COMP.	GRAB	STATION LOCATION	MATRIX	NO. OF CONTAINERS	LOW LEVEL VOA	SULFIDE	NITRATE/NITRITE				REMARKS
SJD000	7/21/94	1000		✓	FRONT - MW	GW	4	X	X	X				VOA'S PRESERVED W/ HCL SULFIDE PRESERVED W/ NaOH + Zn ACETATE
SJD001	7/21/94	1030		✓	BACK - MW	GW	4	X	X	X				
SJD002	7/21/94	1300		✓	EAST - MW	GW	4	X	X	X				LABQC
SJD003	7/21/94	1320	✓		EAST - S	SOIL	1			X				LABQC
														ALL SOIL AND GW SAMPLES ARE LOW CONCENTRATION

Relinquished by: (Signature)	Date / Time	Received by: (Signature)	Relinquished by: (Signature)	Date / Time	Received by: (Signature)
K. Pettit	7/22/94 1600	1234567890			
Relinquished by: (Signature)	Date / Time	Received by: (Signature)	Relinquished by: (Signature)	Date / Time	Received by: (Signature)
Relinquished by: (Signature)	Date / Time	Received for Laboratory by: (Signature)	Date / Time	Remarks LAB: REGION 9 SHIPPING IS COMPLETE CARRIER: FED EX, 7/22/94 CUSTODY SEAL #: 12345	

Distribution: Original Accompanies Shipment; Copy to Coordinator Field Files

ATTACHMENT A-3

004

EPA REG 9

FIELD QA/QC SUMMARY FORM

ATTACHMENT 4

Instructions: Complete one form per laboratory and per matrix for each sampling eve

Date: 1-10-94

Sampler: Gail Jones

Office: ACE

Phone: (415) 456-7890

Site: Toxic Dump

Case/SAS #: 17235

Laboratory: Beta Labs, Inc

Matrix: (check one) X Groundwater ___ Surface Water ___ Surface Soil ___ Subsurface Soil ___ Air ___ Other

I. BLANKS

Sample #	Type (circle one)	Date Collected
MVG 021	(Equip) / Field / Travel	1-9-94
	Equip / Field / Travel	
	Equip / Field / Travel	
	Equip / Field / Travel	
	Equip / Field / Travel	
	Equip / Field / Travel	
	Equip / Field / Travel	
	Equip / Field / Travel	
	Equip / Field / Travel	
	Equip / Field / Travel	
	Equip / Field / Travel	
	Equip / Field / Travel	
	Equip / Field / Travel	

II. BACKGROUND SAMPLES

Sample #	Date Coll

III. LAB QC SAMPLES

Sample #	Date Colle
MVG 003	1-6-9
MVG 004	1-6-9

IV. DUPLICATES

Sample #	Matches Sample #	Date Collected	Type (circle one)
MVG 015	MVG 016	1-9-94	a / (b) / c / d
			a / b / c / d
			a / b / c / d
			a / b / c / d
			a / b / c / d
			a / b / c / d

a= composite
b= consecuti
c= colocated
d= consecut/ soil sle

V. Checklist of Field Problems Encountered

	Sample # / Date(s) of Occurrence / Comments
X None	
___ Pumping Equipment Problems	
___ Sample Filtering Problems	
___ Less Than Required Sample Volume	
___ Low Flow/Recharge Rates	
___ Preservation Problems	
___ Samples Not Shipped in 24 hrs.	
___ Federal Express Delay	
___ Other	

ATTACHMENT 5

SAMPLE SHIPMENT INFORMATION

DATE: _____ # OF PAGES: _____

TO: GAIL JONES, RSCC COORDINATOR FROM: _____

CO.: EPA REGION 9 (P-3-2) CO.: _____

PHONE #: (415) 744-1430 PHONE #: _____

FAX #: (415) 744-1476 FAX #: _____

CASE #: _____ LAB NAME: _____

COOLERS: _____ SHIPPING DATE: _____

CARRIER: _____ AIRBILL #: _____

# SAMPLES	CONC/MATRIX	ANALYSES

Is this sampling event complete with this shipment? Y N

COMMENTS: _____

CASE #: _____ LAB NAME: _____

COOLERS: _____ SHIPPING DATE: _____

CARRIER: _____ AIRBILL #: _____

# SAMPLES	CONC/MATRIX	ANALYSES

Is this sampling event complete with this shipment? Y N

COMMENTS: _____