Prepared for

Schlumberger Technology Corporation
105 Industrial Boulevard
Sugar Land, Texas 77478

BUILDING-SPECIFIC LONG-TERM VAPOR INTRUSION OPERATIONS, MAINTENANCE, AND MONITORING PLAN

369 and 379 North Whisman Road
Mountain View, California

Prepared by

Geosyntec consultants

engineers | scientists | innovators

1111 Broadway, 6th Floor
Oakland, California 94607

WR1133A

21 October 2013

Building-Specific Long-Term Vapor Intrusion Operations, Maintenance, and Monitoring Plan

369 and 379 North Whisman Road
Mountain View, California

Prepared by

Geosyntec Consultants, Inc.
1111 Broadway, 6th Floor
Oakland, California 94607

REGISTERED PROFESSIONAL ENGINEER
SYED A REHAN
No. C67805
Exp. 06/30/2014
CIVIL
STATE OF CALIFORNIA

Jackie Lanzon, P.E.
Project Engineer

Syed Rehan, P.E.
Associate Engineer

Project Number: WR1133A

21 October 2013

TABLE OF CONTENTS

1 INTRODUCTION 1
1.1 Site Background 1
1.2 Purpose and Description of Work 2
1.3 Roles and Responsibilities 2
1.3.1 Program Manager 2
1.3.2 Project Manager 2
1.3.3 Project Engineers 3
1.3.4 Support Staff 3
1.4 Document Organization 4
2 SYSTEM DESIGN 6
2.1 Extraction and Monitoring System 6
2.1.1 Extraction Point Construction 6
2.1.2 Pressure Monitoring Point Construction 7
2.1.3 Metering Box Construction 7
2.2 Extraction and Treatment System 7
2.2.1 Extraction Piping 7
2.2.2 Extraction and Treatment Systems 8
2.3 Blower Operation Monitoring System 8
3 INITIAL SHAKEDOWN AND STARTUP 8
3.1 SSD System Shakedown 9
3.2 SSD System Startup 9
3.2.1 Startup Balancing 9
3.2.2 Startup Monitoring Program 10
4 ROUTINE STARTUP AND SHUTDOWN 12
4.1 System Startup Procedures 13
4.2 System Shutdown Procedures 13
5 MONITORING AND RECORDKEEPING 13
5.1 Notification Requirements 14
5.2 Routine Monitoring 14
5.3 Recordkeeping 16

6 MAINTENANCE OF SSD SYSTEM COMPONENTS 16
6.1 Vapor Extraction Piping 16
6.2 Extraction and Monitoring Point Vaults and Metering Boxes 17
6.3 Vapor-Phase Granular Activated Carbon Filters 17
6.4 Mechanical Blowers 17
6.5 Exhaust Fans 18
7 DATA ANALYSIS AND REPORTING 18
7.1 Data QA/QC 18
7.1.1 Field Quality Assurance and Quality Control Samples 18
7.1.2 Laboratory Quality Assurance and Quality Control Samples 19
7.1.3 Data Validation 20
7.2 Data Analysis and Interpretation 21
7.2.1 Blower Performance 21
7.2.2 SSD System Balancing 22
7.2.3 VGAC Operating Limits 23
7.2.4 Effluent VOC Concentration 23
7.2.5 Sub-Slab Vapor Concentration 23
8 CONTINGENCY PLAN 23
8.1 SSD System Balancing 23
8.2 Blower Performance 24
8.3 VGAC Operating Limits 24
9 SSD SYSTEM SHUTDOWN CRITERIA 24
10 BUILDING-SPECIFIC INSTITUTIONAL CONTROLS IMPLEMENTATION, MANAGEMENT, AND MONITORING PLAN 26
10.1 Description of Institutional Controls 26
10.2 Monitoring 27
10.3 Management 27
10.4 Implementation Plan 27
11 REPORTING 27
12 REFERENCES 29

LIST OF TABLES

Table 1: Startup Monitoring Field Form

Table 2: Routine Monitoring Field Form

Table 3: Routine Inspection Field Form

Table 4: Indoor Air and Sub-Slab Soil Vapor Screening Levels

LIST OF FIGURES

Figure 1: Site Location Map

Figure 2: Organization Chart

LIST OF APPENDICES

Appendix A: Design Drawings and Specifications

Appendix B: Product Data for SSD System Components

Appendix C: Suggested Operating Procedures

1 INTRODUCTION

Geosyntec Consultants (Geosyntec) prepared this Building-Specific Long-Term Vapor Intrusion (VI) Operations, Maintenance, and Monitoring Plan (OM&M Plan) on behalf of Schlumberger Technology Corporation (STC) for the buildings located at 369 and 379 North Whisman Road (currently known as Buildings 7 and 6, respectively, of "The Quad") in Mountain View, California (Site). This OM&M Plan was prepared in accordance with the 16 September 2011 United States Environmental Protection Agency (USEPA) Statement of Work (VI SOW), Section 2.4.2 (USEPA, 2011). The locations of Buildings 6 and 7, are depicted in Figure 1.

1.1 Site Background

The Site lies within the Middlefield-Ellis-Whisman (MEW) VI Study Area, an area depicted in Figure 1 of the VI SOW (USEPA, 2011). Remedial actions for the MEW VI Study Area, including the Site, are specified in the 2010 ROD Amendment for the VI Pathway (VI ROD Amendment; USEPA, 2010). The VI SOW (USEPA, 2011) describes the process for implementing VI remedies within the MEW VI Study Area in accordance with the VI ROD Amendment (USEPA, 2010).

Prior to November 2012, indoor air sampling at Buildings 6 and 7 demonstrated compliance with the USEPA commercial indoor air cleanup levels for chemicals of concern (COCs) defined in the VI ROD Amendment (USEPA, 2010)[1]. In November 2012, following building renovations, indoor air samples indicated several locations within Buildings 6 and 7 where trichloroethene (TCE), a Site-specific COC, was detected at concentrations above its USEPA commercial indoor air cleanup level; no other COCs were detected above their respective USEPA commercial indoor air cleanup levels (Geosyntec, 2013a).

Follow-up investigations concluded that the interiors of Buildings 6 and 7 were under negative pressure as a result of changes to the heating, ventilation and air conditioning (HVAC) system operating conditions. Interim mitigation measures were immediately taken to restore positive pressure in Buildings 6 and 7 and were subsequently reported to USEPA (Geosyntec, 2013a). After implementation of the interim mitigation measures, confirmation indoor air samples collected in Buildings 6 and 7 in January 2013 with the HVAC system on (HVAC-on) indicated that all COCs were either not detected or were well below their respective USEPA commercial indoor air cleanup levels. STC elected to install Sub-Slab Depressurization (SSD) systems in these two

[1] The Site-specific COCs, as defined in the VI ROD Amendment, are trichloroethene (TCE), tetrachloroethene (PCE), cis-1,2-dichloroethene (c-DCE), trans-1,2-dichloroethene (t-DCE), vinyl chloride, 1,1-dichloroethene (1,1-DCE), and 1,1-dichloroethane (1,1-DCA).

buildings. These systems were designed to minimize the potential for vapor intrusion into the buildings, as described in the Building-Specific Vapor Intrusion Control System Remedial Design (Design Report; Geosyntec, 2013b) and Addendum #1 to the Building-Specific Vapor Intrusion Control System Remedial Design (Design Report Addendum; Geosyntec, 2013c).

1.2 Purpose and Description of Work

This OM&M Plan provides the basis for operating and maintaining the SSD systems to minimize the potential for vapor intrusion into Buildings 6 and 7. The purpose of this document is to provide an overview of the SSD system design, to provide information related to startup and shakedown of the SSD system, and to outline the general OM&M procedures related to individual components of the SSD system. This OM&M Plan also includes information on institutional controls (ICs), outlines monitoring and reporting procedures, and describes procedures for modifying or shutting down the SSD system.

Hazards associated with SSD system OM&M are discussed in the Site-specific Health and Safety Plan (HASP), which is carried by all staff whenever on Site (Geosyntec, 2013d). The HASP includes an analysis of physical and biological hazards, and a description of personnel responsibilities, appropriate personal protection equipment (PPE), hazard communication requirements, emergency action, routes to hospital and urgent care facilities, fire prevention, spill response, personnel training, and medical monitoring requirements.

1.3 Roles and Responsibilities

OM&M of the SSD system is the joint responsibility of the personnel listed below. The responsibility of each individual is described in each section, and the relationship of each entity to the others is presented in the Project Organization Chart (Figure 2). The personnel listed in Figure 2 may change over time at the discretion of STC or Geosyntec.

1.3.1 *Program Manager*

Vic Cocianni of Schlumberger Technology Corporation is the Program Manager who coordinates directly with Geosyntec. The Program Manager is responsible for oversight of SSD operations, including review of OM&M reports and all other SSD-related deliverables.

1.3.2 *Project Manager*

The Project Manager is Eric Suchomel of Geosyntec who acts as a liaison between the Project Engineers and the Program Manager. The Project Manager will coordinate with

the Project Engineers to evaluate whether he or she has the necessary resources to operate, maintain, and monitor the SSD system. The Project Manager will also serve as an alternative point of contact for the Program Manager.

1.3.3 *Project Engineers*

The Project Engineers are Syed Rehan and Jackie Lanzon of Geosyntec who will act as liaisons with the property owner. Responsibilities of the Project Engineers include:

- Overseeing the daily OM&M program (i.e., SSD system optimization and cost control, assigning and managing OM&M personnel);
- Reviewing and approving changes to SSD system operations/procedures in consultation with the property owner;
- Training OM&M personnel through familiarization with the Site, project documents, and project-specific OM&M Plan requirements;
- Providing quality control of the OM&M activities;
- Reviewing laboratory test results and making appropriate recommendations to the Project Manager and Support Staff;
- Assigning of locations for testing and sampling;
- Reviewing Support Staff daily reports and field logs;
- Reporting to the Project Manager, as well as documenting pertinent observations reported by the Support Staff;
- Summarizing and communicating SSD system activities to the Project Manager and property owner;
- Reporting any unresolved deviations from the OM&M Plan to the Project Manager and property owner;
- Alternately performing duties of the Support Staff as needed; and
- Reviewing monitoring report(s).

1.3.4 *Support Staff*

The duties of the Support Staff, as assigned by the Project Engineers, include performing and documenting SSD system OM&M activities. The duties of the Support Staff include, but are not limited to:

- Assisting the Project Engineers with the administration of the OM&M program (i.e., operating the system, performing routine and non-routine maintenance tasks, and coordinating with subcontractors as needed);
- Performing the collection, packaging, and shipping of samples for laboratory testing, as directed by the Project Engineers;

- Reviewing laboratory test results and making appropriate recommendations to the Project Engineers;
- Validating laboratory test results in accordance with Section 7.1, updating data tables, and making appropriate recommendations to the Project Engineers;
- Documenting OM&M activities on field logs;
- Coordinating with vendors/suppliers to obtain quotes and place orders for SSD system supplies (e.g., sampling canisters from the laboratory, replacement parts);
- Attending OM&M related meetings;
- Reporting to the Project Engineers; and
- Preparing OM&M report(s).

In addition to these specific duties, Support Staff will take note of any on-Site activities that could result in impacts to the SSD system. Observations noted by the Support Staff will be reported to the Project Engineers.

1.4 Document Organization

The VI SOW specifies several items to be included in the OM&M Plan. These items and where they are addressed in this document are included in the table below:

TASK ITEM	LOCATION IN OM&M PLAN
(a) Description of vapor intrusion control system(s) used.	Section 2.
(b) Description and schedule of normal operation and maintenance tasks, including equipment and material requirements, anticipated equipment replacement for significant components, availability of spare parts, and, where appropriate, provisions for remote monitoring and control, operator training and certification requirements, staffing needs, and related requirements.	Sections 1.3 and 6.
(c) Description of recordkeeping and reporting requirements, including operation and inspection logs, maintenance records and checklists.	Sections 5.3 and 11.
(d) Description and analysis of potential operating problems and contingency plan (e.g., equipment failure, higher than expected contaminant concentrations), including emergency operating and response activities and relevant health and safety information.	Sections 7.2 and 8.
(e) Description of the types of monitoring data to be collected, including sampling and data gathering methods.	Sections 3.2 and 5.2.
(f) Recommended frequency and methodologies of sampling, types of samples, and performance monitoring.	Sections 3.2 and 5.2.

TASK ITEM	LOCATION IN OM&M PLAN
(g) Description of how the performance data will be analyzed, interpreted, and reported to evaluate system performance.	Section 7.2
(h) Description of sampling procedures to monitor that air emissions from treatment operations do not exceed requirements established by the Bay Area Air Quality Management District, if applicable.	Sections 6.3 and 7.2.4.
(i) Quality Assurance/Quality Control activities.	Section 7.1.
(j) Project organization and responsibility.	Section 1.3.
(k) Overall operations, maintenance, and monitoring schedule.	Sections 5 and 6; Tables 1 through 3.
(l) Description of notifications and coordination with USEPA and property owner, building manager, or tenants for collection of monitoring data.	Sections 4.1 and 5.1.
(m) Description of the building-specific ICs monitoring, management, and implementation plan.	Section 10.
(n) Proposed decision-making process and criteria for determining the vapor intrusion control system is no longer necessary as a vapor intrusion remedy (i.e., shut-down criteria).	Section 9.
(o) Description of contents, and frequency of progress reporting.	Section 11.

The remainder of this OM&M Plan is organized as follows:

- Section 2, “System Design,” contains information regarding the description, location, and operation of the SSD system components;
- Section 3, “Initial Shakedown and Startup,” describes the initial startup and shakedown process to obtain the operating conditions for the SSD system;
- Section 4, “Routine Startup and Shutdown,” describes normal SSD system operation startup and shutdown procedures to be implemented once routine operations have commenced;
- Section 5, “Monitoring and Recordkeeping,” provides a description of performance data to be collected, sampling and data gathering methods, and recommended frequency;
- Section 6, “Maintenance of SSD System Components,” describes the maintenance procedures for each component of the SSD system;
- Section 7, “Data Analysis and Reporting,” describes sample data Quality Assurance (QA)/Quality Control (QC) activities, methods of system performance evaluation, and reporting instructions;
- Section 8, “Contingency Plan,” describes and analyzes potential operating problems and provides contingency plans including emergency operating and response activities;

- Section 9, "SSD System Shutdown Criteria," describes the proposed decision-making process and criteria for determining the SSD system is no longer necessary as a vapor intrusion remedy;
- Section 10, "Building-Specific Institutional Controls Implementation, Management, and Monitoring Plan," describes existing ICs and proposed monitoring, management, and implementation of ICs;
- Section 11, "Reporting," describes the contents, format, and frequency of OM&M reporting; and
- Section 12, "References," provides a list of references used in the preparation of this OM&M Plan.

2 SYSTEM DESIGN

The design of the SSD system was presented in the Design Report (Geosyntec, 2013b) and the Design Report Addendum (Geosyntec, 2013c). The SSD system consists of a retrofitted sub-slab depressurization system, sub-slab vapor monitoring points, and vapor treatment system. Each of the SSD system components are described below. The locations of the SSD system components are shown on the design drawings included in Appendix A.

2.1 Extraction and Monitoring System

Three extraction points are located around the perimeter of each building in order to apply a negative pressure (i.e., vacuum) beneath the buildings to minimize the potential for vapor intrusion. Seven monitoring points are installed around the perimeter of Building 6 and five monitoring points are located around the perimeter of Building 7 to monitor the influence of the extraction points across each building's slab. Metering boxes are installed between each extraction point and equipment enclosure to monitor vacuum and flow rate within SSD system piping. The locations and details for extraction and monitoring points are shown on Sheets C-1 and C-2 of the design drawings (Appendix A).

2.1.1 *Extraction Point Construction*

The extraction points are comprised of solid 3-inch diameter Schedule 80 PVC pipes that extend beneath the concrete slab a horizontal distance of approximately 5 feet into an existing coarse gravel layer. The extraction pipes are fitted at the end under the building with a coarse mesh stainless steel screen. Outside of the building, the extraction points are fitted with sample ports and a ball valve inside heavy pedestrian traffic-rated, watertight utility boxes. Details are shown on Sheet C-2 of the design drawings (Appendix A).

2.1.2 *Pressure Monitoring Point Construction*

The pressure monitoring points are comprised of solid 1-inch diameter Schedule 80 PVC pipes that extend beneath the concrete slab a horizontal distance of approximately 5 feet into an existing coarse gravel layer. The monitoring pipes are fitted at the end under the building with a coarse mesh stainless steel screen. Outside of the building, the monitoring points are fitted with sample ports and a ball valve inside heavy pedestrian traffic-rated, watertight utility boxes. Details are shown on Sheet C-2 of the design drawings (Appendix A).

2.1.3 *Metering Box Construction*

Metering boxes are 8-inch diameter Christy® valve boxes (or equivalent) equipped with water-tight, temper-resistant lids rated for heavy pedestrian traffic. Pipes within metering boxes contain a tap-and-plug port for collection of vacuum and flow rate measurements. A metering box is located between each extraction point and equipment enclosure at a minimum distance of 15 pipe diameters (e.g., 45 inches for 3-inch diameter pipe) upstream and 10 pipe diameters (e.g., 30 inches for 3-inch diameter pipe) downstream from the nearest flow obstruction. The metering boxes are installed with a finish height slightly above surrounding grade, and the bottom layer is composed of a bed of drainage rock. The metering box details are shown on Sheet C-3 of the design drawings (Appendix A).

2.2 Extraction and Treatment System

Each extraction point is connected to below-grade piping that leads to a vapor treatment system housed within an equipment enclosure. Extracted vapors are routed through a vapor-phase granulated activated carbon (VGAC) filter that is designed to reduce the concentration of COCs removed from under the building slab prior to discharge to the atmosphere. The vapor extraction and treatment system components are described in further detail below.

2.2.1 *Extraction Piping*

Each extraction point is connected to below-grade piping installed in trenches around the perimeter of each building (Appendix A). The below-grade extraction piping is comprised of 2-inch to 4-inch diameter Schedule 40 PVC pipe that transitions to 2-inch diameter Schedule 80 PVC pipe prior to entering each equipment enclosure. The piping was installed in trenches with a minimum 18-inch thick cover. Sand bedding and backfill soil were compacted to a minimum relative compaction which is the higher of 90% or that of the adjoining sub-grade.

2.2.2 *Extraction and Treatment Systems*

Extraction and treatment systems installed at each building are housed in NEMA Type 4R rated enclosures (Detail 1, Sheet C-3 of Appendix A). These extraction and treatment system enclosures (equipment enclosures) include a Vent-Scrub® 200TEFC Fan Package manufactured by Siemens Corporation that consists of a ¾ horsepower, 100 standard cubic feet per minute (scfm) extraction blower (Cincinnati Fan model PB-10A or PB-14A) and a 200-lb VGAC filter drum, a telemetry system, monitoring ports, and appurtenances. The equipment enclosures are lined with adsorptive material to reduce the blower noise level as measured outside of each equipment enclosure. The details of the equipment enclosures are presented on Sheet C-3 of Appendix A.

Each equipment enclosure includes a 200-lb VGAC filter drum designed to reduce the concentration of COCs removed from under the building slab prior to discharge to the atmosphere. The filter drum is filled with VOCarb® 36C granular activated carbon manufactured by Siemens Corporation. VOCarb® 36C is a high activity (Butane Activity #23.5) granular activated carbon that is manufactured from selected grades of coconut shell. The granular shape of carbon maximizes its geometric surface area, significantly increasing surface and pore diffusion rates and thereby increasing its effectiveness for the adsorption of volatile organic compounds (VOCs) with a short contact time. Based on the isotherms, VOCarb® 36C will have capacity to adsorb up to approximately 1 lb of VOCs per 40 lbs of carbon. Appendix B contains information from the manufacturer on the VGAC filter and blower package.

2.3 <u>Blower Operation Monitoring System</u>

Each blower is connected via below-grade communication cabling to an automated blower operation monitoring (telemetry) system that is installed in one of the two equipment enclosures at each building. The telemetry system located in EE-2 services the blowers located in EE-1 and EE-2, and the telemetry system located in EE-4 services the blowers located in EE-3 and EE-4. An automated transmitter is connected to each telemetry system, which will notify the Project Engineers if the power to the blower is interrupted at any location or if any of the blowers stop operating.

3 INITIAL SHAKEDOWN AND STARTUP

This section describes the initial startup and shakedown procedures to be implemented to obtain the proper baseline and operating conditions for the SSD system, as discussed in the Design Report (Geosyntec, 2013b) and Design Report Addendum (Geosyntec, 2013c). During the three-month initial startup period, the SSD system will be monitored to confirm the design objective and to obtain baseline data for long-term OM&M.

3.1 SSD System Shakedown

Prior to SSD operation, "shakedown" will be performed for the mechanical and electrical components of the extraction system. Shakedown will be performed by the installation contractor with oversight from Geosyntec. Mechanical checks will include monitoring that valves, sample ports, and conveyance piping are working properly without leaking. The communication between the electrical box and the equipment will be checked to monitor that the equipment is responding as designed to the switches at the electrical box. The blower motors, amperage, and motor rotation will be checked to monitor that they are operating as the manufacturer recommends. Proper operation of the SSD system alarm autodialer will also be evaluated during shakedown activities.

3.2 SSD System Startup

The initial SSD system startup procedures will include balancing the system to achieve the design criteria defined in the Design Report (Geosyntec, 2013b) and to obtain baseline parameters to establish the long-term OM&M program.

3.2.1 *Startup Balancing*

The SSD system balancing process involves evaluating the influence of each extraction point to determine the optimum valve configuration necessary to achieve the design criteria defined in the Design Report (Geosyntec, 2013b).

Differential pressure measurements collected at surrounding pressure monitoring points will be used to evaluate the influence of each extraction point. Differential pressure will be measured from the Labcock® valves at each extraction and monitoring point using a digital manometer in accordance with Section 2.2 of the Suggested Operating Procedures (SOPs; Appendix C). The flow rate downstream of each extraction point will also be measured at the tap and plug located in each metering box using a hand-held digital anemometer, as described in Section 2.3 of the SOPs (Appendix C). The applied vacuum at each extraction point will be adjusted by partially opening or closing ball valves located in the extraction point vaults, and the resulting downstream flow rate and differential pressure at surrounding monitoring points will be measured. This process will be repeated until the SSD system has been appropriately balanced. When a vacuum of -4.0 IWG is observed and sustained at each extraction point, the flow rate will be recorded. Also, the valve opening configuration will be physically marked on the valve body such that it can be resumed if the valve is changed.

Monitoring results will be documented on the Startup Monitoring Field Form (Table 1). Based on the baseline observations, measurements, and recordings collected during the startup evaluation, routine operating parameters and valve configurations will be established for each extraction point.

3.2.2 *Startup Monitoring Program*

Startup monitoring as described below will be implemented for the first three months after completing startup balancing activities. The initial monitoring activities described in the table below will be conducted daily for the first week, weekly for the following three weeks, and monthly for the following two months, unless otherwise noted.

Parameter	Location (s)	Equipment/ Method	Procedure
Pressure Differential[2]	Extraction Point	Dwyer Series 475-000-FM, 0–1.000 IWG, Dwyer Series 475-2-FM, 0–40.00 IWG Appendix C, Sections 2.1 through 2.2	Compare measured differential pressure to design differential pressure of -4 IWG. Measure relative to atmospheric pressure.
	Exterior Pressure Monitoring Point		Compare measured differential pressure to design differential pressure of -0.04 IWG underneath the building. Measure relative to atmospheric pressure.
	Interior Temporary Pressure Point		Compare measured differential pressure to design differential pressure of -0.04 IWG underneath the center of the building. Measure relative to atmospheric pressure. Sampling will be discontinued after the first week of SSD System operation.
	Equipment Enclosure Inlet		Confirm blower is operating within manufacturer's limits, and obtain pressure & flow relationship.
	Inside Building		Measure indoor air pressure relative to atmospheric pressure to assess conditions at the time that sub-slab pressure is measured at interior monitoring points.
Flow Rate	Extraction Point	TSI Model No. 9545 VelociCalc[3] Appendix C, Section 2.3	Measure flow from each extraction point area of influence.
	Equipment Enclosure Inlet		Confirm blower & VGAC are operating within manufacturer's limits, and obtain pressure & flow relationship.
Temperature	Ambient Air		Obtain for comparison to system air temperature.
	Equipment Enclosure Inlet		Measure inlet air stream temperature to evaluate whether the temperature is below manufacturer's limit of < 140°F.

[2] Pressure differential between sub-slab or blower and atmosphere.

[3] The VelociCalc is equivalent to a Pitot tube, as demonstrated in the Pilot Test Report (Geosyntec, 2013b).

Parameter	Location (s)	Equipment/ Method	Procedure
Relative Humidity	Ambient Air		Obtain for comparison to system air relative humidity.
	Equipment Enclosure Inlet		Measure inlet air stream relative humidity to evaluate for possible effects on VGAC adsorption if humidity is above manufacturer's recommendation of less than 50%.
Amperage	Blower	Ampere Gauge Appendix C, Section 2.4	Record blower amperage shown on gauge to establish a baseline current usage for future blower condition/efficiency monitoring.
Vapor Concentration	VGAC Inlet and Outlet	ppbRAE™ 3000 Photoionization Detector (PID) Appendix C, Section 2.4	Monitor for VOC breakthrough.
Vapor Concentration	Extraction Point	SUMMA™ Canister; USEPA Method TO-15 Appendix C, Section 2.5	Evaluate sub-slab vapor conditions and the concentration trend at each extraction point. Sampling will be conducted at the end of the first week of operation and monthly for two additional months.
Indoor Air Concentration	Inside Building	SUMMA™ Canister, USEPA Method TO-15 (SIM) Appendix C, Section 2.6	Assess indoor air quality under both HVAC on and HVAC off scenarios. One round of HVAC on and HVAC off sampling will be performed during the third month of operation. Such sampling is to be coordinated with building owner and occupant.

SOPs for collection of the parameters outlined above are provided in Appendix C, and a startup monitoring checklist is provided as Table 1. Data will be analyzed in accordance with Section 7 to determine whether SSD system adjustments or implementation of other contingency measures are necessary.

Indoor air samples under HVAC-on and HVAC-off conditions will be collected during the third month of operation. Data collected via laboratory analysis will be used to evaluate whether maintenance of a minimum pressure differential of -0.04 IWG between the building and the sub-slab layer is adequate to maintain indoor air COC concentrations below their respective USEPA commercial clean-up levels. Samples will be collected in accordance with the procedures presented in Section 2.6 in the SOPs (Appendix C).

If COC concentrations in indoor air within a building exceed the USEPA commercial indoor air cleanup levels during startup monitoring based on laboratory analytical data, the following steps will be implemented:

1. The differential pressure at each extraction and monitoring point will be measured to determine whether applied vacuum and vacuum propagation are meeting the design criteria outlined in the Design Report (Geosyntec, 2013b). If necessary, modifications will be made to the SSD system per Section 8.1; and
2. If the applied vacuum meets design requirements, one or more of the following contingency measures will be implemented, subject to consultation with and approval by the property owner:
    - An indoor air quality building survey will be conducted, including an inspection of the HVAC system and measurement of interior building pressure;
    - The building pressure under HVAC-on and HVAC-off conditions will be measured to confirm that:
        - The building is under positive pressure under HVAC-on conditions; and
        - The building pressure differential (between indoor and outdoor) does not exceed the SSD system's design pressure differential of -0.04 IWG under the HVAC-off conditions;
    - Interviews with the property owner and tenants will be conducted to determine whether any building modifications have been made that may have altered the sub-slab condition and/or indoor air quality; and
    - Potential vapor intrusion conduits will be identified and sealed.
3. The indoor air will be re-sampled to evaluate the effectiveness of the above measures.

4 ROUTINE STARTUP AND SHUTDOWN

The normal SSD system operation startup and shutdown procedures (after the initial shakedown and startup activities have been completed) are described in this section. The SSD system is designed to operate continuously, but may be shut down for brief periods for (1) maintenance or for replacing VGAC drums, or (2) in the event of a power outage or interruption. The systems will require a manual re-start after a power outage or interruption.

4.1 System Startup Procedures

Prior to re-starting the SSD system during routine operations, Support Staff will confirm that the electrical box and all major equipment have been inspected, per the manufacturers' recommendations (Appendix B) and the procedures presented in Section 3. The steps outlined below will be followed at each equipment enclosure to resume routine SSD system operation:

1. Calibrate monitoring equipment.
2. Verify that the main electrical supply is on and the circuit breaker has not tripped.
3. Confirm all manual ball valves located in each extraction point vault are in appropriate valve positions as established during initial shakedown/startup.
4. Turn the switch on the electrical box to "on" to turn on the SSD system.
5. Record initial operating parameters on the SSD system startup monitoring form (Table 1).
6. Closely monitor operating amperage of the blowers. If the amperage exceeds 5 amperes (A), shut the system down and perform troubleshooting.
7. Monitor vacuum, pressure, flow rate, and other operating parameters indicated on the SSD system startup monitoring form (Table 1).
8. Record initial and final operating parameters on the SSD system startup monitoring form (Table 1).

Ongoing routine monitoring after completion of the startup procedures described herein will be conducted in accordance with Section 5.2.

4.2 System Shutdown Procedures

Under non-emergency conditions, when it is necessary to shut down the SSD system for maintenance or to replace VGAC, the steps outlined below will be followed:

1. Record operating parameters on the SSD system prior to shutting down.
2. Turn off all power switches to the blower and telemetry system. Keep the venting fan running.
3. Record the time the system was shut down.

5 MONITORING AND RECORDKEEPING

The SSD system shall be monitored to evaluate system performance with respect to the following design criteria as defined in the Design Report (Geosyntec, 2013b):

- A pressure differential of approximately -4 IWG between the sub-slab and outdoors, or as needed to meet the criterion for sub-slab pressure differential, shall be maintained at all extraction points;
- A minimum pressure differential of -0.04 IWG between the sub-slab and outdoors shall be maintained at all pressure monitoring points;
- Continuous operation of the extraction system shall be maintained, except for brief periods as required for maintenance and VGAC replacement; and
- Air emissions shall be filtered such that COC concentrations are reduced upon discharge.

Samples collected for performance monitoring are slip-stream process samples and are to be collected in a short period of time, not exceeding 15 minutes. The samples are to be taken during normal operating conditions for the parameter(s) of interest. Field measurements of differential pressure/vacuum and flow rate at individual monitoring and extraction points will be collected on a quarterly basis, at a minimum. Field measurements of flow rate, temperature, and humidity at the inlet to each equipment enclosure, and VOC concentrations at the inlet and outlet of each equipment enclosure, will be collected on a monthly basis during the first year of operation. Measurements will be documented on the Routine Inspection Form (Table 3). Following the initial year of routine monitoring, monitoring frequencies will be re-evaluated.

Additional non-routine sampling may be occasionally conducted to assist with SSD system performance evaluation and optimization at the discretion of the Project Engineers. Inspection and OM&M records shall be kept for reference as discussed in Section 5.3.

5.1 Notification Requirements

As a courtesy, the building owner will be notified prior to initiating performance monitoring activities. The tenant will be responsible for notifying its employees of the monitoring activities, if necessary.

5.2 Routine Monitoring

After the approximate three-month initial monitoring period, routine sampling and monitoring will be conducted to evaluate whether the SSD system continues to operate in accordance with the design criteria. The routine monitoring activities described in the table below will be conducted for the first year of operation at the frequencies noted. Following the initial year of routine monitoring, the frequencies will be re-evaluated.

Parameter	Location (s)	Equipment/ Method	Frequency (Year 1)	Procedure
Pressure Differential[4]	Extraction Point	Dwyer Series 475-000-FM, 0–1.000 IWG, Dwyer Series 475-2-FM, 0–40.00 IWG Appendix C, Sections 2.1 through 2.2	Quarterly	Compare measured differential pressure to design differential pressure of -4 IWG. Measure relative to atmospheric pressure.
	Exterior Pressure Monitoring Point		Quarterly	Compare measured differential pressure to design differential pressure of -0.04 IWG underneath the building. Measure relative to atmospheric pressure.
	Equipment Enclosure Inlet		Quarterly	Confirm blower is operating within manufacturer's limits, and obtain pressure & flow relationship.
Flow Rate	Extraction Point	TSI Model No. 9545 VelociCalc Appendix C, Section 2.3	Quarterly	Measure flow from each extraction point area of influence.
	Equipment Enclosure Inlet		Quarterly	Confirm blower & VGAC are operating within manufacturer's limits, and obtain pressure & flow relationship.
Temperature	Ambient Air		Monthly	Obtain for comparison to system air temperature.
	Equipment Enclosure Inlet		Monthly	Measure inlet air stream temperature to evaluate whether the temperature is below manufacturer's limit of < 140°F.
Relative Humidity	Ambient Air		Monthly	Obtain for comparison to system air relative humidity.
	Equipment Enclosure Inlet		Monthly	Measure inlet air stream relative humidity to evaluate for possible effects on VGAC adsorption if humidity is above manufacturer's recommendation of less than 50%.
Amperage	Blower	Ampere Gauge Appendix C, Section 2.4	Quarterly	Record blower amperage shown on gauge to establish a baseline current usage for future blower condition/efficiency monitoring.
Vapor Concentration	VGAC Inlet and Outlet	ppbRAE™ 3000 PID Appendix C, Section 2.4	Monthly	Monitor for VOC breakthrough.
			Monthly	

SOPs for collection of the parameters outlined above are provided in Appendix C, and a routine monitoring field form is provided as Table 2. Data will be analyzed in

[4] Pressure differential between sub-slab or blower and atmosphere.

accordance with Section 7 to determine whether SSD system adjustments or implementation of other contingency measures are necessary.

5.3 Recordkeeping

Changes made to the SSD system shall be documented and filed with the as-builts to maintain an accurate record of SSD system components and configuration.

OM&M records shall be kept for reference as electronic or paper files for a period of 15 years. Maintenance performed on SSD system equipment shall be documented during each Site visit as part of the daily report. SSD system operating parameters shall be recorded on monitoring forms during startup (Table 1) or routine operations (Table 2), and inspection and maintenance activities shall be recorded on routine inspection forms (Table 3).

6 MAINTENANCE OF SSD SYSTEM COMPONENTS

Routine maintenance is necessary to achieve optimal SSD system performance. Some benefits of routine maintenance are:

- Aid in smooth operation of the SSD system;
- Advanced detection of potential problems;
- Minimization of the need for major maintenance; and
- Minimization of the likelihood of SSD system malfunction due to OM&M related problems.

In order to maintain their integrity upon completion of shakedown/startup testing, for the first year, SSD system components will be visually inspected on a monthly basis to check for signs of wear, distress, or damage. Following the initial year of routine maintenance, the frequency of maintenance activities will be re-evaluated. Routine inspections of SSD system components will prolong the operable life of the system and will allow for adjustments in system operations in order to maintain compliance with the design criteria outlined in the Design Report (Geosyntec, 2013b).

Support Staff will record observations, inspections, and maintenance activities on routine inspection forms (Table 3). Suggested maintenance activities for accessible portions of the SSD system are described below and summarized in Table 3.

6.1 Vapor Extraction Piping

The exposed portions of the vapor extraction piping and fittings shall be inspected during the scheduled Site visit or on a semi-annual basis, at a minimum. Visible cracks, breaks, or other deterioration shall be repaired immediately by qualified

personnel using new materials. New sections of pipe shall be installed according to the design specifications (Sheet G-2, Appendix A), and applicable building codes.

6.2 Extraction and Monitoring Point Vaults and Metering Boxes

The Labcock® valves and exposed PVC piping at the extraction and monitoring point vaults shall be inspected for any breaks, cracks, or other visible deterioration during the scheduled Site visit. Damaged components shall be repaired or replaced with new materials according to manufacturer recommendations (Appendix B) and the design specifications (Sheet G-2, Appendix A).

The bolts, threaded tabs, and gaskets at extraction and monitoring point vault lids shall be inspected for wear and be replaced or repaired as needed. If standing water is present in any vaults, it shall be documented and removed, and the cause should be remedied.

6.3 Vapor-Phase Granular Activated Carbon Filters

Flow rate, pressure, temperature, and relative humidity at the influent to each VGAC filter shall be measured during the scheduled Site visit to monitor that physical conditions are within acceptable limits. The operational limits for the VGAC filter medium are: maximum flow of 100 cubic feet per minute (cfm), maximum static pressure of 3 pounds per square inch as gauged (psig), maximum temperature of 140 °F, and recommended relative humidity less than 50%. The physical external condition of the VGAC filters will also be inspected, and VOC measurements will be collected as described in Sections 3.2.2 and 5.2 to assess whether replacement of the carbon media is necessary.

VGAC is used to filter COCs from the extracted vapor prior to discharge. To evaluate "breakthrough" of COCs through the VGAC medium, total VOC concentrations at the filter inlet and outlet will be measured using a PID on a monthly basis. Breakthrough at the outlet will be defined as the greater of the following:

- 10% of the inlet stream VOC concentration; or
- 0.5 parts per million by volume (ppm_v).

A VGAC changeout will be implemented as soon as possible upon identification of breakthrough. Two spare VGAC drums will be kept on Site to streamline VGAC changeout and minimize down time.

6.4 Mechanical Blowers

The mechanical blowers installed within each equipment enclosure are intended to operate continuously. Mechanical blowers will be inspected during the scheduled Site

visit for continuous operation, condition of electrical wiring, tightness of set screws, excessive vibration, visible cracks, breaks, or other deterioration. If evidence of deterioration is observed, the blower shall be repaired promptly by qualified personnel in accordance with manufacturer recommendations (Appendix B). Blower performance data will also be collected and analyzed quarterly to assess whether a replacement is necessary, as discussed in Sections 5.2 and 7.2.1.

6.5 Exhaust Fans

The exhaust fan in each equipment enclosure will be inspected for continuous operation and will be cleared of dust and debris during the scheduled Site visit.

7 DATA ANALYSIS AND REPORTING

The following analyses will be performed as part of SSD system OM&M:

- Field measurements:
  - Differential pressure;
  - Flow rate;
  - Temperature;
  - Relative humidity; and
  - VOCs via PID measurement.
- Laboratory analysis of indoor air and extracted sub-slab soil vapor samples via USEPA Method TO-15 (SIM) and TO-15, respectively.

Data collected during SSD system operation will undergo quality assurance/quality control (QA/QC) review. Data will be used to optimize system performance and to evaluate when to decommission the system.

7.1 Data QA/QC

Data QA/QC will be performed in accordance with the Revised Site-wide Tiering Work Plan (Haley & Aldrich, 2013). QA/QC procedures defined in the Revised Site-wide Tiering Work Plan are reiterated herein for convenience.

7.1.1 *Field Quality Assurance and Quality Control Samples*

Field QC procedures will be used to monitor that sampling results achieve the data quality objectives (DQOs) presented in the Revised Site-wide Tiering Work Plan (Haley & Aldrich, 2013).

Equipment Maintenance and Calibration

Field instruments shall be maintained as prescribed in the manufacturer's specifications. Scheduled maintenance will be performed by trained personnel. The analytical laboratory is responsible for analytical equipment calibration and maintenance as described in their laboratory QA Plan. Subcontractors are responsible for maintaining the equipment needed to carry out subcontracted duties.

Field instruments must be calibrated daily according to manufacturer instructions. Calibrated equipment will be identified and dated, and calibration and maintenance information will be documented on field logs. If equipment malfunction is suspected, the instrument will be removed from the field, tagged for maintenance and/or recalibration, and a substitute instrument will be used in its place. Equipment that fails calibration will also be removed from the field and serviced and/or recalibrated.

Field Duplicates

Field duplicates will be collected and analyzed for vapor samples at a frequency of one field duplicate for every 10 samples. Field duplicates will be prepared by collecting one additional sample at an extraction point.

Sample Custody and Documentation

Samples will be labeled in the field and all information relevant to field sampling will be documented on field logs and on chain-of-custody forms. Samples will be stored and shipped at ambient temperature to the laboratory via common courier with accompanied chain-of-custody forms. Precautions will be taken to avoid sample interference, such as fueling vehicles or using pens or markers that may contain solvents to label the samples.

Maximum sample hold times for laboratory analysis will be adhered to. Samples will be shipped to the laboratory via UPS, Federal Express, or by courier for one to two day arrival. Upon receipt at the laboratory, samples will be inspected and entered into the laboratory record for analysis. If there are any discrepancies between the received samples and the chain-of-custody forms, the sender will be immediately notified.

As with corrections made in the field, any changes made to the chain-of-custody form will be made by striking the item with a single line and initialing and dating the correction in ink.

7.1.2 *Laboratory Quality Assurance and Quality Control Samples*

The analytical laboratory selected to analyze samples will be National Environmental Laboratory Accreditation Program (NELAP)-certified and able to provide necessary

turnaround times and data deliverables. The laboratory will have written operating procedures defining the instrumentation, maintenance, calibration, method detection limits, QC analysis, internal standards, acceptance criteria, etc., for the analytical methods used. The procedures must be available to the laboratory chemists performing the work and must meet or exceed the requirements of the method to be used for analysis (e.g., TO-15). The laboratory must maintain records of all activities that have an impact on the quality of the results.

The laboratory must maintain instrumentation required for analysis; any method substitution due to instrument failure will not be permitted without prior approval.

Laboratory QA/QC samples that will be analyzed during ongoing operations include method blanks, laboratory control samples (LCS), and laboratory control sample duplicates (LCSD).

Method Blanks

A method blank is an unused, certified canister that has not left the laboratory. The blank canister is pressurized with humidified, ultra-pure zero air and carried through the same analytical procedure as a field sample. The injected aliquot of the blank must contain the same amount of internal standards that are added to each sample. The laboratory method blank must be analyzed after the calibration standard(s) and before any samples are analyzed. Whenever a high concentration sample is encountered (i.e., outside the calibration range), a blank analysis should be performed immediately after the sample is completed to check for carryover effects. A method blank is used to demonstrate that target analytes are not present above the reporting limit (RL) or may indicate potential sources of contamination from laboratory procedures. The laboratory will analyze one method blank sample per every 10 primary samples.

Laboratory Control Samples

A laboratory control sample is a sample made with an aliquot of a clean (control) matrix similar to the sample matrix (air/soil vapor) spiked with compounds that are representative of the target analytes and is used to document laboratory performance. For air and soil vapor analysis, this QA/QC sample is not necessary since the “clean” matrix is humidified laboratory grade ultrapure air. However, the LCS and LCSD pairs are used to assess laboratory precision and accuracy. One laboratory control sample will be analyzed per every 10 primary samples.

7.1.3 *Data Validation*

Once the final data package is received from the laboratory, laboratory data will be subject to a Tier I evaluation by a qualified data validator. The goal of a Tier I

evaluation is to provide a brief summary of key analytical issues/deficiencies that might affect data quality and user decisions based on the data. Tier I data review includes verification of the precision, accuracy, representativeness, completeness, comparability, and sensitivity (PARCCS) parameters, including evaluation indicators such as holding times, reporting limits, LCS recoveries, and field and laboratory duplicate results. Data validation and verification will be performed in accordance with the requirements outlined in the USEPA Contract Laboratory Program National Functional Guidelines for Superfund Organic Methods Data Review (National Functional Guidelines; USEPA, 2008). The National Functional Guidelines define the qualifiers to be used during the data review process and the logic for applying the data qualifier flags to any anomalies identified in the data set.

Data integrity will be evaluated by monitoring that:

- The correct sampling procedures were followed;
- The chain-of-custody form was properly completed;
- Samples were analyzed before the holding time limit expired;
- Calculations and units were performed and reported correctly;
- Results obtained are within the working calibration range of the instrument used; and
- QC results meet the acceptance criteria defined in the Revised Site-wide Tiering Work Plan (Haley & Aldrich, 2013).

If data outliers are found, the differences will be investigated. For the initial phase of sampling, outlying data are defined as any results falling out of the acceptance criteria defined in the Revised Site-wide Tiering Work Plan (Haley & Aldrich, 2013).

7.2 Data Analysis and Interpretation

During routine SSD system operation (i.e., after completion of the three-month startup monitoring period), the differential pressure/vacuum, flow rate, temperature, humidity, and VOC concentrations at the influent and effluent of each equipment enclosure will be monitored as discussed in Section 5.2. Analysis and interpretation of field data is further described in the subsections below.

7.2.1 *Blower Performance*

Data collected via field measurements for the following parameters will be used to determine whether the blower is operating within recommended limits:

- Static pressure at the inlet to each equipment enclosure;

- Flow rate at the inlet to each equipment enclosure; and
- Blower amperage.

Static pressure and flow rate at the inlet to each equipment enclosure will be plotted on the appropriate fan curve provided in Appendix A. The operating conditions of the blower will then be compared to those observed during SSD system startup to determine if the blower's operating conditions have shifted from the manufacturer's fan curve. The amperage draw of each blower will also be measured and compared to the baseline amperage draw to determine whether the blower is drawing current above or below the baseline amperage draw.

In the event that a blower is operating outside of the manufacturer's recommended limits, the contingency measures described in Section 8.2 will be implemented.

7.2.2 *SSD System Balancing*

As described in Section 3, baseline operating conditions will be established during initial SSD shakedown/startup monitoring activities and during the first three months of operation such that the SSD system achieves the criterion for sub-slab pressure differential identified in the Design Report (Geosyntec, 2013b). The SSD system will be operated under these conditions as long as the design criterion for sub-slab differential pressure is maintained. Data collected via field measurements for the following parameters will be used to determine whether the SSD system is in need of balancing:

- Differential pressure measurements within each building;
- Differential pressure measurements at exterior pressure monitoring points;
- Flow rate at extraction points; and
- Vacuum measurements at extraction points.

Differential pressure measurements within each building will be compared to differential pressure measured at the monitoring points to confirm that the SSD system overcomes the influence of the HVAC system. If it is determined that the differential pressure at interior or exterior monitoring points does not meet the design criteria, the contingency measures described in Section 8.1 will be implemented to balance the SSD system.

7.2.3 *VGAC Operating Limits*

Data collected for the following parameters will be used to determine whether the physical properties of the extracted sub-slab vapor are within the manufacturer's recommended limits for VGAC treatment:

- Temperature in ambient air and at the inlet to each equipment enclosure; and
- Humidity in ambient air and at the inlet to each equipment enclosure.

If the temperature at the inlet to each equipment enclosure is above 140 °F or if the humidity at the inlet to each equipment enclosure is above 50%, the contingency measures described in Section 8.3 will be implemented.

7.2.4 *Effluent VOC Concentration*

Data collected via field measurements for VOC concentration at the inlet and outlet of each equipment enclosure will be assessed to determine whether breakthrough has occurred, as defined in Section 6.3.

7.2.5 *Sub-Slab Vapor Concentration*

VOC concentration data collected via field measurements and/or laboratory analysis will be used to evaluate the sub-slab vapor conditions and the VOC concentration trends at each extraction point.

Sub-slab vapor concentrations will be evaluated to determine when to cease SSD system operation, as discussed in Section 9.

8 CONTINGENCY PLAN

This section includes a description and analysis of potential operating problems and applicable contingency plans, including emergency operating and response activities.

8.1 <u>SSD System Balancing</u>

If the design pressure differential of -0.04 IWG for any monitoring point is not achieved, one or more of the following contingency measures will be implemented:

- Interviews with the property owner and tenants will be conducted to determine whether any building modifications have been made which may have altered the sub-slab condition;
- Potential vapor intrusion conduits will be identified and sealed;

- Manual ball valve configuration at each of the affected extraction points will be modified;
- Existing blowers will be modified to apply a higher vacuum;
- Blowers will be replaced with models capable of applying a higher vacuum; or
- Additional extraction point(s) will be installed.

8.2 Blower Performance

If the blower is performing below its curve, or if it is drawing more current than it is rated for upon startup, the blower may need to be replaced with a different model. If the blower's performance generally matches manufacturer's specifications upon startup but gradually degrades over time, the blower may need to be replaced with a similar model.

In the event that an unscheduled blower shutdown message is communicated by the automated telemetry system or otherwise observed, one or both of the following contingency measures will be implemented:

- Within 24 hours, maintenance personnel as assigned by the Project Engineers will visit the Site to identify the cause of the shutdown. The cause of shutdown will be documented, appropriate equipment will be repaired, and the extraction unit will be restarted; or
- Within three days, the malfunctioning blower will be replaced with a backup blower.

One spare Cincinnati Fan model PB-10 and one spare Cincinnati Fan model PB-14 will be kept on Site to streamline blower replacement and minimize down time.

8.3 VGAC Operating Limits

If the temperature at the inlet to an equipment enclosure is above 140 °F, the associated blower will be powered down and the extraction system will be inspected to determine the cause of the elevated temperature.

If the humidity at the inlet to an equipment enclosure is above 50%, the need for installation of an in-line moisture trap prior to the VGAC filter will be assessed. If determined appropriate, an in-line moisture trap will be installed.

9 SSD SYSTEM SHUTDOWN CRITERIA

The operation and maintenance of the SSD system will continue until the concentrations at each extraction point meets the following criteria:

- VOC concentration, as measured by a PID, is at or below 20 ppb_v during at least three consecutive monitoring events; and
- VOC concentration, as measured by a PID, does not vary by more than 5 - 10 % during at least three consecutive monitoring events.

When the above criteria have been met, vapor samples will be collected from the extraction points to evaluate sub-slab vapor conditions. The samples will be collected in 1-liter batch-certified SUMMA™ canisters for laboratory analysis of COCs defined in the VI ROD Amendment (USEPA, 2010) using USEPA Method TO-15. Samples will be collected in accordance with the attached SOPs (Appendix C). If results of laboratory testing indicate that COC concentrations are below the sub-slab soil vapor screening levels proposed in Table 4, Geosyntec will notify the property owner and USEPA and will request permission to temporarily shut down the SSD system. Proposed sub-slab soil vapor screening levels were calculated by dividing the indoor air commercial (non-residential) cleanup levels (as defined in Table 1 of the SOW) by a default shallow soil vapor attenuation factor of 0.05 per the California Department of Toxic Substances Control (DTSC; DTSC, 2011).

Once the SSD system has met the temporary shutdown criteria, and upon receipt of USEPA written approval to do so, the operation will shift to a pulsed operation to monitor for rebound in the sub-slab soil vapor concentrations. The SSD system will be shut down to allow sub-slab vapors to re-equilibrate, and the rebound testing will be conducted at intervals of one month, three months, and six months. At the completion of each time interval, each extraction point will be purged of a volume equal to approximately 20% to 30% of the void space in the sub-slab region baserock for the area served by the extraction point, and then vapor samples will be collected from each extraction point for laboratory analysis. The vapor sample results will be compared to the screening levels in Table 4. Based on the results, the following steps will be implemented:

- If COC concentrations in the extraction points remain below the sub-slab soil vapor screening levels, the SSD system will remain shut down, and the subsurface will be allowed to equilibrate for longer periods (i.e., three months or six months).
- If COC concentrations in the extraction points remain at or below sub-slab soil vapor screening levels during all three rebound tests, then sub-slab vapor concentrations likely will not rebound or increase in the future. At this point, the SSD system would remain shut down and one round of indoor air monitoring would be performed in accordance with Section 2.6 of the SOPs (Appendix C). Next steps regarding re-assignment of the building Tier would be discussed with USEPA upon receipt of indoor air results.

- If significant rebound is observed (e.g., a 50% increase in concentration or concentrations above sub-slab screening levels) in the extraction points, the SSD system regular operation will be resumed.

10 BUILDING-SPECIFIC INSTITUTIONAL CONTROLS IMPLEMENTATION, MANAGEMENT, AND MONITORING PLAN

In accordance with Section 2.3.3 of the VI SOW (USEPA, 2011), Institutional Controls are required by USEPA to confirm that:

- The required engineering controls are appropriately operated and are not interfered with;
- Appropriate vapor intrusion controls are installed in new building construction where required;
- Building owners and occupants are provided with information regarding the appropriate vapor intrusion remedy for each building; and
- Building owners and tenants provide information to USEPA and the Implementing Parties regarding changes to the property ownership or structure that may impact the VI remedy.

This section describes the building-specific ICs monitoring, management, and implementation plan.

10.1 Description of Institutional Controls

ICs are already in place at 369 and 379 North Whisman Road. A Declaration of Environmental Restrictions and Access (DERA) was recorded with the Santa Clara County Recorder's Office on 5 November 1997 that provides STC access to 369 and 379 North Whisman Road, subject to the terms of the DERA, to implement, among other things, any "cleanup order, monitoring order, testing order, remediation or removal order, or other direction issued by USEPA…". The existing recorded DERA serves to:

- Allow the SSD systems to be constructed at 369 and 379 North Whisman Road;
- Assure access for sampling, operation, maintenance, and monitoring of the SSD systems;
- Require that information on changes to the buildings that could impact the SSD systems are provided to STC;
- Assure that the SSD systems are appropriately operated and are not interfered with; and
- Obligate subsequent owners of the property to be bound by the DERA.

Because the existing recorded DERA satisfies the USEPA requirements for ICs as defined in Section 2.3.3 of the SOW, no additional ICs are proposed for these buildings.

10.2 Monitoring

The DERA requires the property owner to inform STC of improvements or alterations at the Site that impact Remedial Work, as defined in the DERA, which would include the SSD system. If STC is provided with a report of such an alteration or improvement from the property owner, STC will include that report as an attachment to the OM&M reports described in Section 11.

10.3 Management

As indicated above, the DERA for the Site is recorded with the Santa Clara County Recorders' Office. As a recorded document in the public record for the Site, the DERA is available to any entity conducting a title search for the Site, and any potential purchaser of the Site will be put on notice of the DERA and its obligations. By operation of real property law, the recorded DERA imposes obligations on the property owner and any subsequent purchaser of the Site.

10.4 Implementation Plan

The DERA described in Section 10.1 is already in place at the Site, and no additional ICs are necessary. A statement confirming that the DERA is recorded for the Site will be submitted to the USEPA as part of SSD system OM&M reporting.

11 REPORTING

OM&M reports will be submitted to USEPA and the property owner on a quarterly basis for the first year, and annually thereafter. OM&M reports will be presented in letter format, and will include:

- Significant updates or changes in SSD system operation;
- Results and data analysis from ongoing SSD system performance monitoring;
- Operational data;
- A discussion of any changes made to the SSD system or any corrective actions taken; and
- A discussion of ICs in accordance with Section 10 above.

The OM&M reports will present the results of sampling, including field and analytical data collected during the reporting period. Evaluations of extracted sub-slab soil vapor concentrations versus time will be included. OM&M reports will be submitted within

30 days after the end of each reporting period (i.e., by 30 April, 31 July, 31 October, and 31 January for quarterly reports, and 31 January for annual reports).

12 REFERENCES

DTSC, 2011. Vapor Intrusion Mitigation Advisory, October.

Geosyntec Consultants, 2013a. Indoor Air Sampling Report, Former Fairchild Buildings — 369, 379, 389 and 399 North Whisman Road and 468 Ellis Street. February.

Geosyntec Consultants, 2013b. Building-Specific Vapor Intrusion Control System Remedial Design, 369 and 379 North Whisman Road, Mountain View, California. 3 July.

Geosyntec Consultants, 2013c. Addendum #1 to the Building-Specific Vapor Intrusion Control System Remedial Design, 369 and 379 North Whisman Road, Mountain View, California. 13 September.

Geosyntec Consultants, 2013d. Site-Specific Health and Safety Plan. Middlefield-Ellis-Whisman Former Fairchild Sites and Regional Groundwater Remediation Program, 29 March.

Haley & Aldrich, 2013. Revised Site-Wide Vapor Intrusion Sampling and Analysis Work Plan for Response Action Tiering, Middlefield-Ellis-Whisman Area and Moffett Field, California. 22 March.

USEPA, 2008. USEPA Contract Laboratory Program National Functional Guidelines for Superfund Organic Methods Data Review, EPA-540-R-08-01, June.

USEPA, 2010, Record of Decision Amendment for the Vapor Intrusion Pathway, MEW Superfund Study Area, Mountain View and Moffett Field, California, August.

USEPA, 2011. Statement of Work, Remedial Design and Remedial Action to Address the Vapor Intrusion Pathway, Middlefield-Ellis-Whisman Superfund Study Area, Mountain View and Moffett Field, California. September.

TABLES

Table 1
Startup Monitoring Field Form
369-379 North Whisman Road
Mountain View, California

Date	Time On-Site	Name
	Time Off-Site	Company

Digital Manometer Model / ID:

Digital Anemometer Model / ID:

Photoionization Detector Model / ID: PID Bulb: _____ eV Calibration reading: _____ ppm isobutylene

	Equipment Readings						Maintenance Procedures / Notes		
Monitoring Location	Pressure Differential or Vacuum (IWG)	Flow Rate (scfm)	Temperature (°F)	Relative Humidity (%)	VOCs (ppb_v)	Blower Amperage (A)	SP / valve ok?	Seal on vault ok?	Blower Operating?
Ambient Air									
Ambient Air	--	--			--	--	--	--	--
Building Interior (Across Doorways)									
Building 6 (Average)		--	--	--	--	--	--	--	--
Building 7 (Average)		--	--	--	--	--	--	--	--
Temporary Pressure Monitoring Points (Week 1 only)									
TMP-369 (relative to outdoor air)		--	--	--	--	--	--	--	--
TMP-379 (relative to outdoor air)		--	--	--	--	--	--	--	--
Monitoring Points									
MP-1		--	--	--	--	--			--
MP-2		--	--	--	--	--			--
MP-3		--	--	--	--	--			--
MP-4		--	--	--	--	--			--
MP-5		--	--	--	--	--			--
MP-6		--	--	--	--	--			--
MP-7		--	--	--	--	--			--
MP-8		--	--	--	--	--			--
MP-9		--	--	--	--	--			--
MP-10		--	--	--	--	--			--
MP-11		--	--	--	--	--			--
MP-12		--	--	--	--	--			--
Extraction Points									
EP-1			--	--	--	--			--
EP-2			--	--	--	--			--
EP-3			--	--	--	--			--
EP-4			--	--	--	--			--
EP-5			--	--	--	--			--
EP-6			--	--	--	--			--
Equipment Enclosures									
EE-1 - Influent									
EE-1 - Effluent	--	--	--	--					
EE-2 - Influent									
EE-2 - Effluent	--	--	--	--					
EE-3 - Influent									
EE-3 - Effluent	--	--	--	--					
EE-4 - Influent									
EE-4 - Effluent	--	--	--	--					

-- = Not Applicable
A = Amperes
°F = degrees Fahrenheit
EE = Equipment Enclosure
EP = Extraction Point
IWG = Inches of water as gauged
MP = Monitoring Point
ppb_v = parts per billion by volume
SP = Sample Port
TMP = Temporary Pressure Monitoring Point
VOCs = Volatile Organic Compounds as measured by photoionization detector

Notes:

Table 2
Routine Monitoring Field Form
369-379 North Whisman Road
Mountain View, California

Date	Time On-Site	Name
	Time Off-Site	Company

Digital Manometer Model / ID:

Digital Anemometer Model / ID:

Photoionization Detector Model / ID: PID Bulb: _____ eV Calibration reading: _____ ppm isobutylene

	Equipment Readings						Maintenance Procedures / Notes		
Monitoring Location	Pressure Differential or Vacuum (IWG)	Flow Rate (scfm)	Temperature (°F)	Relative Humidity (%)	VOCs (ppb_v)	Blower Amperage (A)	SP / valve ok?	Seal on vault ok?	Blower Operating?
Ambient Air									
Ambient Air	--	--			--	--	--	--	--
Monitoring Points									
MP-1		--	--	--	--	--			--
MP-2		--	--	--	--	--			--
MP-3		--	--	--	--	--			--
MP-4		--	--	--	--	--			--
MP-5		--	--	--	--	--			--
MP-6		--	--	--	--	--			--
MP-7		--	--	--	--	--			--
MP-8		--	--	--	--	--			--
MP-9		--	--	--	--	--			--
MP-10		--	--	--	--	--			--
MP-11		--	--	--	--	--			--
MP-12		--	--	--	--	--			--
Extraction Points									
EP-1			--	--	--	--			--
EP-2			--	--	--	--			--
EP-3			--	--	--	--			--
EP-4			--	--	--	--			--
EP-5			--	--	--	--			--
EP-6			--	--	--	--			--
Equipment Enclosures									
EE-1 - Influent									
EE-1 - Effluent	--	--	--	--					
EE-2 - Influent									
EE-2 - Effluent	--	--	--	--					
EE-3 - Influent									
EE-3 - Effluent	--	--	--	--					
EE-4 - Influent									
EE-4 - Effluent	--	--	--	--					

-- = Not Applicable
A = Amperes
°F = degrees Fahrenheit
EE = Equipment Enclosure
EP = Extraction Point
IWG = Inches of water as gauged
MP = Monitoring Point
ppb_v = parts per billion by volume
SP = Sample Port
VOCs = Volatile Organic Compounds as measured by photoionization detector

Notes:

Table 3
Routine Inspection Field Form
369-379 North Whisman Road
Mountain View, California

Date	Time On-Site	Name
	Time Off-Site	Company

☐ Inspected Check visible piping for breaks, cracks, corrosion.
Repair Required? Yes/No
If yes, describe: _____

☐ Inspected Check sealant surrounding accessible horizontal pipe penetrations in each extraction and monitoring point vault for cracks and deterioration.
Repair Required? Yes/No
If yes, describe: _____

☐ Inspected Check sample ports/vaults for loose fittings, leaks, or signs of damage.
Repair Required? Yes/No
If yes, describe: _____

Equipment Enclosures (EE-1 through EE-4)

Inspection Activity	EE-1	EE-2	EE-3	EE-4	Describe Action Required, if any (e.g., cleaning, tightening of screws, repair)
Check exhaust ducts and blower for excessive dust and/or debris accumulation					
Check each blower for loose mounting bolts and set screws					
Inspect each blower for sign of wear, corrosion, exterior damage, etc					
Check each blower for unusual noise (bearing grinding, scraping, ticking, squealing, pitch change)					
Check each enclosure exhaust fan to ensure continuous operation.					
Check VGAC vessels for signs of damage. Check that influent temperature and relative humidity are below 140°F and 50%, respectively. Check that influent flow is below 100 cubic feet per minute (cfm) and static pressure is below 3 pounds per square inch as gauged (psig).					

Notes: _____

Table 3
Routine Inspection Field Form
369-379 North Whisman Road
Mountain View, California

Date	Time On-Site	Name
	Time Off-Site	Company

Equipment Enclosures (EE-1 through EE-4)

Inspection Activity	EE-1	EE-2	EE-3	EE-4	Describe Action Required, if any (e.g., change-out complete, change-out needed)
Influent PID reading (ppm_v)					
Effluent PID reading (ppm_v)					
Carbon breakthrough identified[1] (Y/N)?					

Notes:
ppm_v = parts per million by volume, as measured by photoionization detector (PID).
1. Carbon breakthrough is defined as the greater of the following: 10% of the inlet stream concentration or 0.5 ppm_v at the outlet.

Annual Checklist (to be completed in 4th Quarter only)

To your knowledge, was maintenance perfomed on the monitoring points/extraction points/vaults during past year?
Yes/No
Repair Required? Yes/No
If yes, describe: _____

To your knowledge, was maintenance perfomed on the metering boxes during past year?
Yes/No
Repair Required? Yes/No
If yes, describe: _____

To your knowledge, was maintenance perfomed on the subsurface PVC piping during past year?
Yes/No
Repair Required? Yes/No
If yes, describe: _____

To your knowledge, was maintenance or repair performed on the concrete slab during the past year?
Yes/No
Repair Required? Yes/No
If yes, describe: _____

To your knowledge, was maintenance or repair performed on the pre-existing vapor barrier during the past year?
Yes/No
Repair Required? Yes/No
If yes, describe: _____

Notes: _____

Table 4
Indoor Air and Sub-Slab Soil Vapor Screening Levels
369-379 North Whisman Road
Mountain View, California

MEW Site Chemical of Concern	[1]Indoor Air Non-Residential Cleanup Level (µg/m^3)	[2]Sub-Slab Soil Vapor Non-Residential Screening Level (µg/m^3)	Sub-Slab Soil Vapor Non-Residential Screening Level (ppb$_v$)
Trichloroethene (TCE)	5	100	18.3
Tetrachloroethene (PCE)	2	40	5.8
cis-1,2-dichloroethene (1,2-DCE)	210	4200	1042
trans-1,2-DCE	210	4200	1042
Vinyl Chloride	2	40	15.4
1,1-dichloroethane (1,1-DCA)	6	120	29.2
1,1-dichloroethene (1,1-DCE)	700	14000	3474

Notes:
µg/m^3 = microgram per cubic meter
ppb$_v$ = parts per billion by volume

1. Indoor Air Cleanup Levels as defined in Table 1 of: USEPA, 2011. Statement of Work, Remedial Design and Remedial Action to Address the Vapor Intrusion Pathway, Middlefield-Ellis-Whisman Superfund Study Area, Mountain View and Moffett Field, California. September.

2. Sub-Slab Soil Gas Screening Levels were calculated based on an existing commercial building sub-slab attenuation factor of 0.05, per Table 2 of: DTSC, 2011. Guidance for the Evaluation and Mitigation of Subsurface Vapor Intrusion to Indoor Air (Vapor Intrusion Guidance), October.

FIGURES

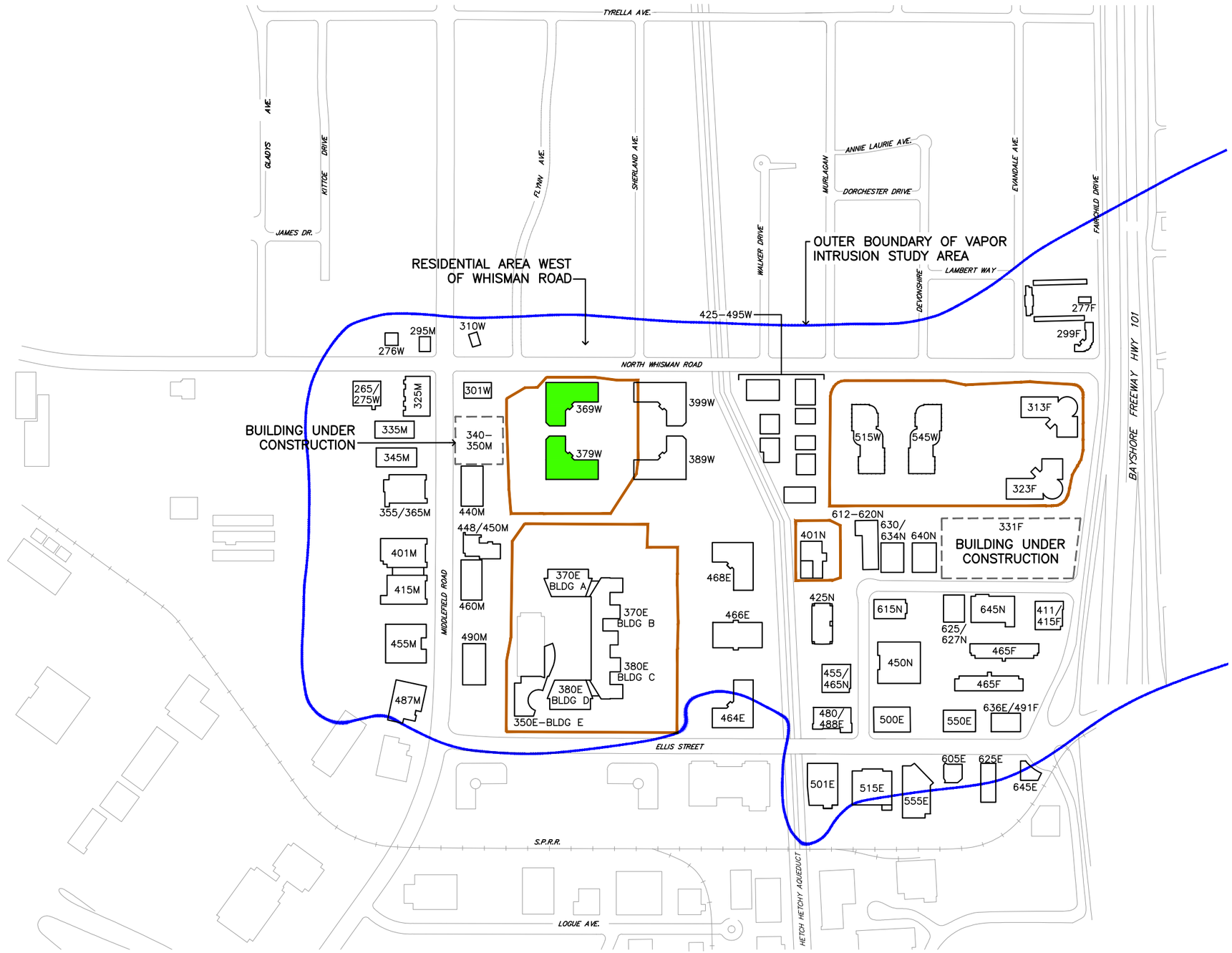

LEGEND:

- SLURRY WALL
- OUTER BOUNDARY OF VAPOR INTRUSION STUDY AREA
- SUBJECT SITE
- E ELLIS STREET
- M EAST MIDDLEFIELD ROAD
- F FAIRCHILD DRIVE
- W NORTH WHISMAN ROAD
- N NATIONAL AVENUE

NOTES:

1. BOUNDARY OF MEW STUDY AREA IS DEFINED BY THE 5 MICROGRAMS PER LITER (µg/L) TRICHLOROETHENE CONTOUR AS PRESENTED BY EPA IN DECEMBER 2011.
2. BUILDINGS IN RESIDENTIAL AREA WEST OF WHISMAN ROAD ARE NOT SHOWN.

0 250 500
SCALE IN FEET

SOURCE: HALEY & ALDRICH, 2013, BUILDING–SPECIFIC INDOOR AIR SAMPLING REPORT: 369–399 NORTH WHISMAN ROAD AND 468 ELLIS STREET, MOUNTAIN VIEW, CALIFORNIA, FEBRUARY.

Geosyntec consultants

SITE LOCATION
369 AND 379 NORTH WHISMAN ROAD
MOUNTAIN VIEW, CALIFORNIA

FIGURE NO.	1
PROJECT NO.	WR1133A
DATE:	OCTOBER 2013

P:\CADD\MEW\V1\Figures\FIG1-SITE_LOCATION.dwg 9-19-13 11:45:03 AM Skhalameyzer

Program Manager

Schlumberger Technology Corporation
Program Coordinator – Vic Cocianni

↓

Project Manager

Geosyntec Consultants
Project Manager – Eric Suchomel

↓

Project Engineer

Geosyntec Consultants
Engineer-of-Record – Syed Rehan, P.E.
Assistant Engineer – Jackie Lanzon, P.E.

↓

Support Staff

Geosyntec Consultants
Support Staff- Lisa Kullen, P.E.
Support Staff – Gesha Uminskiy

Organization Chart **Operation, Maintenance, and Monitoring Plan** **369 and 379 North Whisman Road** **Mountain View, California**	Geosyntec consultants
	Figure Number: 2
	Last Updated: 9/16/2013
	Project Number: WR1133A

APPENDIX A
Design Drawings and Specifications

SUB-SLAB DEPRESSURIZATION (SSD) SYSTEM CONSTRUCTION DRAWINGS

369 / 379 NORTH WHISMAN ROAD

SEPTEMBER 2013

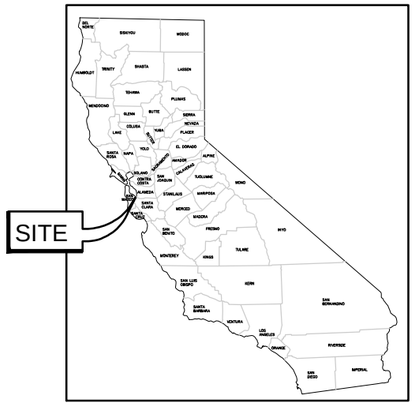

REGIONAL MAP

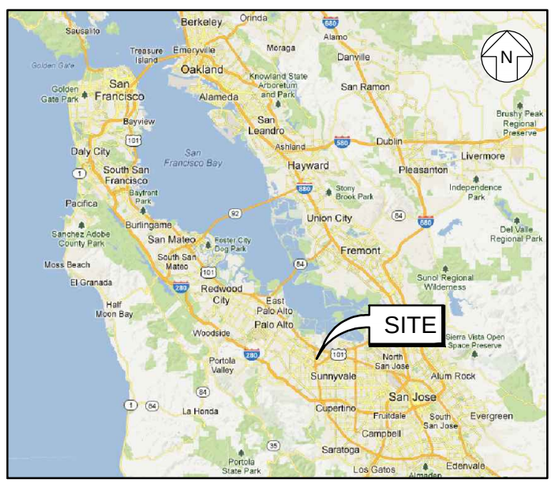

VICINITY MAP

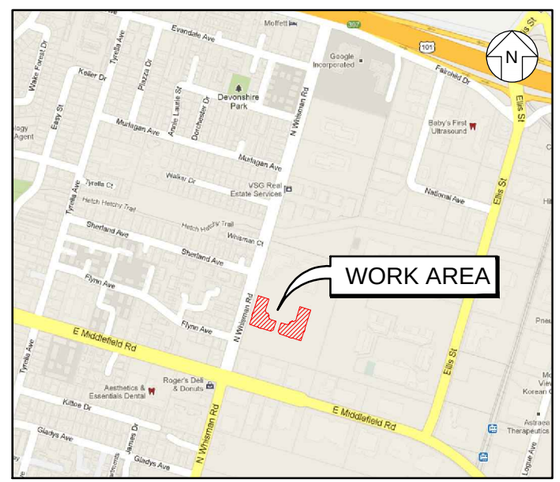

SITE LOCATION MAP

INDEX OF DRAWINGS

DRAWING NO.	TITLE
GENERAL:	
G-1	COVER, INDEX OF DRAWINGS, PROJECT DATA, AND SCOPE OF WORK
G-2	GENERAL AND CONSTRUCTION SPECIFICATIONS
G-3	SPECIFICATIONS, EQUIPMENT, AND SYMBOLS LEGEND
CONSTRUCTION:	
C-1	SITE PLAN
C-2	TYPICAL EXTRACTION AND MONITORING POINT DETAILS
C-3	TYPICAL EQUIPMENT ENCLOSURE
C-4	CONSTRUCTION DETAILS 1
C-5	CONSTRUCTION DETAILS 2
PIPING AND INSTRUMENTATION:	
P-1	PROCESS AND INSTRUMENTATION DIAGRAM

SCOPE OF WORK:

SUB-SLAB DEPRESSURIZATION (SSD) SYSTEMS ARE PROPOSED TO BE INSTALLED AT THE PROJECT LOCATION. THE OBJECTIVE OF THE SSD SYSTEMS IS TO MINIMIZE THE POTENTIAL FOR SOIL VAPOR INTRUSION INTO THE BULDINGS. THE SCOPE OF WORK INCLUDES INSTALLATION OF AN EXTRACTION AND TREATMENT SYSTEM. THE FOLLOWING ARE THE MAJOR TASKS UNDER THIS SCOPE:

1. INSTALLATION OF SUB-SLAB EXTRACTION AND MONITORING POINTS.
2. INSTALLATION OF EXTRACTION EQUIPMENT ENCLOSURES INCLUDING CONCRETE SLABS.
3. COMPLETING PIPING CONNECTION FROM EXTRACTION POINTS TO EXTRACTION EQUIPMENT.
4. INSTALLATION AND WIRING OF ELECTRICAL EQUIPMENT.

PROJECT DATA:

BUILDING OWNER:
369 WHISMAN ASSOCIATES LP

PROJECT LOCATION:
369 / 379 NORTH WHISMAN ROAD
MOUNTAIN VIEW, CALIFORNIA 94043

APN #: 160-53-020
TRACT: 5091081002
YEAR CONSTRUCTED: 1997
ZONING: ML (LIMITED INDUSTRIAL)

0 1" 2"
ORIGINAL SCALE

SCALE IS BASED ON 22" X 34" NON-REDUCED SHEET SIZE (BORDER = 21" X 32")

REVISIONS

NO.	DESCRIPTION	DATE	BY

CLIENT:
SCHLUMBERGER TECHNOLOGY CORPORATION
105 INDUSTRIAL BOULEVARD
SUGARLAND, TEXAS 77478

ENGINEER:
Geosyntec consultants
1111 BROADWAY 6TH FLOOR
OAKLAND, CA 94607
PHONE: (510) 285-2759
FAX: (510) 836-3036

COVER, INDEX OF DRAWINGS, PROJECT DATA, AND SCOPE OF WORK

SSD SYSTEM CONSTRUCTION DRAWINGS
369 / 379 NORTH WHISMAN ROAD
MOUNTAIN VIEW, CALIFORNIA 94043

DESIGN DRAWINGS

DES BY:	LK	DATE:	SEPTEMBER 2013
DRN BY:	MC, JA, MH	SCALE:	NTS
CHK BY:	LK	PROJECT:	WR1133A
REV BY:			
APP BY:	SR	DOCUMENT:	
FILE:	WR1133A-G-1.DWG		

DRAWING NO.
G-1

P:\PR\2003\REM\MEW Fairchild\06_Vapor Intrusion\369-399 Whisman & 468 Ellis\VI Dsgn\Design\Design Dwg\CAD\WR1133A-G-1.dwg Last Edited by: MHirst on 8/19/2013 1:08 PM

GENERAL SPECIFICATIONS

A. GENERAL NOTES

1. "CONTRACTOR" REFERS TO ALL CONTRACTORS RESPONSIBLE FOR THE INSTALLATION OF THE EXTRACTION AND TREATMENT SYSTEM. "CLIENT" REFERS TO SCHLUMBERGER TECHNOLOGY CORPORATION. "OWNER" REFERS TO 369 WHISMAN ASSOCIATES, LP. "ENVIRONMENTAL CONSULTANT" OR "ENGINEER" REFERS TO GEOSYNTEC CONSULTANTS INCORPORATED (GEOSYNTEC).
2. THESE PLANS AND SPECIFICATIONS ARE SUBJECT TO MODIFICATIONS DURING CONSTRUCTION IF CONDITIONS ARISE THAT WERE NOT APPARENT DURING DESIGN. ANY SUCH MODIFICATION SHALL BE APPROVED BY THE ENGINEER.
3. CONTRACTOR SHALL BE RESPONSIBLE FOR VERIFYING ALL DIMENSIONS AND ALL SITE CONDITIONS BEFORE STARTING WORK. THE ENGINEER SHALL BE NOTIFIED OF ANY DISCREPANCY.
4. LOCATIONS OF EXISTING UNDERGROUND UTILITIES ARE NOT SHOWN ON THE PLANS. IT SHALL BE THE CONTRACTOR'S RESPONSIBILITY TO DETERMINE THE EXTENT AND LOCATION OF UTILITIES INCLUDING BUT NOT LIMITED TO WELLS, SEWER LINES, WATER LINES, TELEPHONE/TELECOM LINES, GAS LINES, ELECTRICAL LINES, AND OTHER LINES. FOR UTILITY LINES ON PRIVATE PROPERTY, CONTRACTOR MAY ELECT TO RETAIN A PRIVATE UTILITY LOCATOR FOR THIS PURPOSE AT HIS OWN EXPENSE.
5. THE CONTRACTOR SHALL NOTIFY UTILITY COMPANIES AT LEAST 48 HOURS (2 FULL BUSINESS DAYS) IN ADVANCE OF CONSTRUCTION TO FIELD-LOCATE UTILITIES. THE CONTRACTOR SHALL CONTACT UNDERGROUND SERVICE ALERT OF NORTHERN CALIFORNIA AND NEVADA (USA NORTH) (1-800-227-2600).
6. ANY ADDED COST ON THE PART OF THE CONTRACTOR AS A RESULT OF THE ACTUAL LOCATIONS OF EXISTING UTILITIES BEING DIFFERENT FROM THOSE INDICATED BY THE UTILITY CLEARANCE WORK SHALL BE BORNE BY THE CONTRACTOR.
7. THE CONTRACTOR SHALL BEAR THE COMPLETE COST TO REPAIR OR REPLACE ANY UTILITIES DAMAGED AS A RESULT OF CONSTRUCTION ACTIVITIES. UTILITIES SHALL BE REPAIRED TO THE SATISFACTION OF THE ENGINEER AND UTILITY OWNER. REPAIRS SHALL BE IN ACCORDANCE WITH ALL UTILITY OWNERS' STANDARDS, SPECIFICATIONS, AND CITY REQUIREMENTS AS APPLICABLE, OR AS APPROVED BY THE ENGINEER.
8. ANY RELOCATIONS OF PUBLIC UTILITIES SHALL BE CONDUCTED IN ACCORDANCE WITH ANY AND ALL REQUIREMENTS OF THE UTILITY COMPANY AFFECTED, INCLUDING FEES, BONDS, PERMITS AND WORKING CONDITIONS, ETC. THIS WORK SHALL BE DONE AT NO EXPENSE TO THE LOCAL AGENCIES.
9. CONTRACTOR SHALL REPLACE ANY FENCING, LANDSCAPING, OR IRRIGATION PIPING REMOVED, DAMAGED, OR ALTERED AT CONTRACTOR'S OWN EXPENSE, UNLESS OTHERWISE DIRECTED BY THE ENGINEER.
10. ANY PROPERTY DAMAGED BY THE CONTRACTOR SHALL BE THE CONTRACTOR'S RESPONSIBILITY TO REPAIR OR REPLACE. THE CONTRACTOR IS ADVISED TO DOCUMENT ALL EXISTING DAMAGE BEFORE STARTING WORK. CONTRACTOR SHALL NOTIFY ENGINEER AND CLIENT OF ANY AND ALL PROPERTY DAMAGE AT THE TIME IT OCCURS.
11. THE CONTRACTOR SHALL BE SOLELY AND COMPLETELY RESPONSIBLE FOR CONDITIONS OF THE JOB SITE AT ALL TIMES INCLUDING SAFETY OF PERSONS AND PROPERTY, AND FOR ALL NECESSARY INDEPENDENT ENGINEERING REVIEWS OF THESE CONDITIONS.
12. THE CONTRACTOR SHALL BE ENTIRELY RESPONSIBLE FOR HEALTH AND SAFETY AT THE PROJECT SITE. CONTRACTOR SHALL PLAN, PROVIDE EQUIPMENT FOR, AND IMPLEMENT ALL NECESSARY HEALTH AND SAFETY PROCEDURES TO PROTECT BUILDING TENANT STAFF, PROJECT STAFF, AND THE GENERAL PUBLIC.
13. CONTRACTOR SHALL SECURE THE PROJECT SITE DURING NON-WORKING HOURS AND SHALL COORDINATE SITE ACCESS WITH CLIENT, OWNER, TENANT AND ENGINEER. CONTRACTOR SHALL BE FULLY RESPONSIBLE FOR THE SECURITY OF CONTRACTOR'S TOOLS, EQUIPMENT, AND CONSTRUCTION MATERIALS.
14. CONTRACTOR SHALL PROVIDE ALL LIGHTS, SIGNALS, BARRICADES, FLAGMAN, OR OTHER DEVICES NECESSARY TO PROVIDE FOR SAFETY.
15. ALL TRENCHES AND EXCAVATIONS SHALL BE BARRICADED, DELINEATED, COVERED WITH STEEL PLATES OR PLYWOOD AS APPLICABLE, AND OTHERWISE PROTECTED FROM VEHICULAR AND PEDESTRIAN TRAFFIC, AS NECESSARY, BY THE CONTRACTOR.
16. WHERE EXCAVATIONS OR TRENCHES ARE 4 FEET OR MORE IN DEPTH, THEY SHALL BE ADEQUATELY SHORED, BRACED, AND/OR SHEETED SO THAT THE EARTH WILL NOT SLIDE OR SETTLE AND SO THAT ALL EXISTING IMPROVEMENTS OF ANY KIND WILL BE FULLY PROTECTED FROM DAMAGE. ANY DAMAGE RESULTING FROM A LACK OF ADEQUATE SHORING, BRACING OR SHEETING SHALL BE THE RESPONSIBILITY OF THE CONTRACTOR, AND THE CONTRACTOR SHALL COMPLETE THE NECESSARY REPAIRS FOR RECONSTRUCTION AT THE CONTRACTOR'S OWN EXPENSE.
17. THE CONTRACTOR SHALL PROVIDE ADEQUATE SHEETING, SHORING, AND BRACING OR EQUIVALENT METHODS FOR THE PROTECTION OF THE WORKERS. SAID PROTECTION SHALL CONFORM TO THE APPLICABLE CONSTRUCTION SAFETY ORDERS OF THE PROVISIONS FOR INDUSTRIAL SAFETY OF THE STATE OF CALIFORNIA. THE CONTRACTOR SHALL ALWAYS COMPLY WITH OSHA REQUIREMENTS.
18. ALL WORK SHALL BE PERFORMED AND COMPLETED IN ACCORDANCE WITH ALL APPLICABLE FEDERAL, STATE, AND LOCAL CODES.
19. THE CONTRACTOR SHALL DISPOSE OF AND BEAR THE DISPOSAL COST FOR ALL CONSTRUCTION DEBRIS.
20. ALL MATERIALS AND WORKMANSHIP SHALL FULLY CONFORM TO THE SPECIFICATIONS, STANDARDS, AND ORDINANCES OF THE CITY OF MOUNTAIN VIEW BUILDING DIVISION (CMVBD). SPECIFICATIONS AND DETAILS ARE AVAILABLE IN THE OFFICE OF THE CMVBD ENGINEER, OR CAN BE ACCESSED ON THE MOUNTAIN VIEW WEBSITE AT: HTTP://WWW.MOUNTAINVIEW.GOV/CITY_HALL/PUBLIC_WORKS/STANDARD_PROVISIONS.ASP.

    IF THE SPECIFICATIONS DO NOT ADDRESS AN ITEM, THE WORK SHALL BE DONE IN ACCORDANCE WITH THE LATEST STANDARD SPECIFICATIONS OR CONSTRUCTION DETAILS FROM STANDARD DRAWINGS FROM THE STATE OF CALIFORNIA AND DEPARTMENT OF TRANSPORTATION, UNLESS OTHERWISE NOTED IN THESE PLANS AND SPECIFICATIONS.
21. ALL ALIGNMENTS, OFFSETS, AND GRADES SHALL BE VERIFIED BY THE CONTRACTOR IN THE FIELD USING A METHOD APPROVED BY THE ENGINEER. IF ADJUSTMENTS ARE REQUIRED, THE CONTRACTOR SHALL IMMEDIATELY NOTIFY AND OBTAIN APPROVAL FROM THE ENGINEER BEFORE PROCEEDING WITH ANY ALTERATION TO THE LOCATIONS SHOWN.
22. THE CONTRACTOR SHALL BE HELD RESPONSIBLE FOR ANY FIELD CHANGES MADE WITHOUT WRITTEN AUTHORIZATION FROM THE ENGINEER.
23. ONLY CLIENT MAY AUTHORIZE A CONTRACT "CHANGE ORDER." SHOULD THE CONTRACTOR BELIEVE A CHANGE ORDER IS WARRANTED, HE SHOULD IMMEDIATELY COMMUNICATE WITH THE ENGINEER AND BE PREPARED TO QUOTE A FIRM PRICE OR A "NOT TO EXCEED" PRICE. ALL CHANGE ORDERS SHALL BE AUTHORIZED IN WRITING BEFORE CHANGE ORDER WORK IS PERFORMED.
24. TIME IS OF THE ESSENCE FOR THIS PROJECT. CONTRACTOR SHALL BE RESPONSIBLE FOR COMPLETION OF THE WORK WITHIN TIME FRAME AGREED UPON PRIOR TO START OF WORK.

B. PERMITS

1. RESPONSE ACTIONS CONDUCTED AS PART OF THE USEPA SUPERFUND PROGRAM ARE EXEMPTED BY LAW FROM THE REQUIREMENT TO OBTAIN FEDERAL, STATE OR LOCAL PERMITS RELATED TO ANY ACTIVITIES CONDUCTED COMPLETELY ON SITE. HOWEVER, REGULATORY CRITERIA OF THE APPLICABLE STATE AND LOCAL AGENCIES WERE CONSIDERED IN THE DESIGN AND ENGINEER / CLIENT WILL CONSULT WITH LOCAL AGENCIES FOR LOCAL CODE REQUIREMENTS AS NECESSARY.
2. ALL WORK SHALL BE PERFORMED AND COMPLETED IN ACCORDANCE WITH ALL APPLICABLE FEDERAL, STATE, AND LOCAL CODES.
3. CONTRACTOR SHALL ARRANGE AND SCHEDULE CMVBD INSPECTIONS AS NECESSARY.

CONSTRUCTION SPECIFICATIONS

C. ABOVEGROUND PIPING (EXTRACTION AND TREATMENT SYSTEM)

1. ALL ABOVEGROUND POLYVINYL CHLORIDE (PVC) PIPE SHALL BE NEW SOLVENT-WELDED SCHEDULE 80 PIPE (SOLVENT DESCRIPTION BELOW). ALL PVC PIPE SHALL CONFORM TO ASTM D1785, TYPE 1 (NORMAL IMPACT), GRADE 1 (HIGH CHEMICAL RESISTANCE). ABOVEGROUND PVC FITTINGS SHALL BE NEW SCHEDULE 80 CONFORMING TO ASTM D2467 AND SHALL BE SOCKET TYPE FOR SOLVENT WELDING UNLESS OTHERWISE SHOWN OR SPECIFIED IN THE DRAWINGS.
2. ANY TRANSITIONS FROM SCHEDULE 40 BURIED PIPE TO SCHEDULE 80 PIPE FOR ABOVEGROUND ROUTING SHALL OCCUR AT LEAST 12 INCHES BELOW FINISHED GRADES.
3. CEMENTS AND PRIMERS FOR JOINING PVC PIPE AND FITTINGS SHALL COMPLY WITH ASTM D2564 AND ASTM F656 AND SHALL CONTAIN LOW VOLATILE ORGANIC COMPOUNDS. THE CEMENTS AND PRIMERS SHALL ALSO CONFORM TO THE BAAQMD REGULATION 8 RULE 51-301, PERTAINING TO LOW-VOC MATERIALS.
4. PVC PIPE SHALL BE JOINED ACCORDING TO ASTM D2855 AND IN ACCORDANCE WITH MANUFACTURER'S RECOMMENDATIONS. PIPE COUPLINGS SHALL COME TOGETHER AT THE PROPER ORIENTATION AND SHALL SLIP FREELY INTO PLACE. IF THE PROPER FIT IS NOT OBTAINED, PIPING SHALL BE REMOVED, ADJUSTED, AND REINSTALLED. PIPE AND FITTINGS SHALL GENERALLY BE LEVEL AND SQUARE TO WALLS, SUPPORTS, AND EACH OTHER.
5. BEFORE JOINING, REAM ENDS OF PIPES AND TUBES AND REMOVE BURRS. REMOVE SCALE, SLAG, DIRT AND DEBRIS FROM INSIDE AND OUTSIDE OF PIPES, TUBES AND FITTINGS. ALL PIPE AND FITTINGS SHALL BE CLEAN AND DRY BEFORE APPLYING PRIMER AND PIPE CEMENT. NO FITTINGS ARE TO BE REUSED. IN THE EVENT OF A FAILED SEAL, FITTINGS AND GLUED ENDS OF PIPE ARE TO BE REMOVED ENTIRELY AND DISCARDED, WITH FRESH MATERIALS USED IN THEIR PLACE.
6. VALVES AND APPURTENANCES SHALL BE NEW AND OF THE TYPE AND MODEL SPECIFIED ON THE DRAWINGS OR EQUIVALENT AS APPROVED BY THE ENGINEER.
7. THE CONTRACTOR SHALL LABEL ALL SYSTEM PIPING, SHOWING DIRECTION OF FLOW, SAMPLE PORTS, EXTRACTION OR MONITORING POINT NAME/NUMBER, INFLUENT AND EFFLUENT PIPE, ETC. WITH STANDARD ALL-WEATHER VINYL LABELS OR EQUIVALENT AS APPROVED BY THE ENGINEER. LABELS CAN BE ORDERED FROM SETON LABELING AND SIGNAGE (800-243-6624) OR A VENDOR OF THE CONTRACTOR'S CHOOSING.
8. ALL ABOVEGROUND PIPING SHALL BE SUPPORTED TO PREVENT DISTORTION OR SPRINGING OF PIPE AND CONNECTIONS. PIPE SUPPORT ELEMENTS, INCLUDING FRAMING AND PIPE CLAMPS, SHALL BE NEW UNISTRUT BRAND STAINLESS STEEL OR EQUIVALENT AS APPROVED BY ENGINEER. PIPE SUPPORTS SHOWN ON THE DRAWINGS REPRESENT BASIC REQUIREMENTS. CONTRACTOR SHALL PROVIDE INTERMEDIATE SUPPORTS AND BRACES AS NEEDED TO PROVIDE A FULLY BRACED AND SUPPORTED SYSTEM, WITH NO UNSUPPORTED SPAN EXCEEDING 8 FT IN LENGTH.
9. GENERAL REQUIREMENTS FOR PRIMARY CONVEYANCE PIPELINES CONNECTING SYSTEM COMPONENTS ARE SHOWN ON THE DRAWINGS. CONNECTIONS TO TREATMENT EQUIPMENT (CARBON VESSELS, BLOWERS, ETC) ARE NOT NECESSARILY DETAILED. CONTRACTOR SHALL ESTABLISH CONNECTIONS BETWEEN PRIMARY CONVEYANCE PIPES AND TREATMENT COMPONENTS IN ACCORDANCE WITH THE PIPING AND INSTRUMENTATION DIAGRAM AND USING A MINIMUM OF BENDS AND FITTINGS. COMPONENT CONNECTIONS SHALL BE CLEANLY CONSTRUCTED, SUPPORTED AS NECESSARY, AND SHALL PROVIDE ACCESS TO EQUIPMENT, VALVES, SAMPLE PORTS, GAGES, AND OTHER ELEMENTS REQUIRING REGULAR INSPECTION OR MAINTENANCE.
10. PNEUMATIC ACCEPTANCE TESTING SHALL BE CONDUCTED ON ALL PIPING USING A TEST PRESSURE OF 5 PSIG, USING A GAUGE WITH A RANGE NOT TO EXCEED 5 PSIG. THE TEST SHALL BE MADE BY CLOSING VALVES OR PROVIDING BULKHEADS OR PLUGS, AND PRESSURIZING THE PIPELINE WITH AIR. THE TEST PRESSURE MUST BE MAINTAINED WITHIN 5% FOR A MINIMUM OF 2 HOURS, OR SUFFICIENTLY LONG TO PERMIT THE ENGINEER TO PERFORM AN INSPECTION OF THE SYSTEM AND VERIFY THE ADEQUACY OF THE TEST. ALL PIPE, FITTINGS, JOINTS, VALVES, AND APPURTENANCES SHALL BE INSPECTED AND SHALL BE FREE OF LEAKS DURING THE TEST. UPON COMPLETION OF PRESSURE TESTING AND PRIOR TO CONNECTION TO EXTRACTION POINTS, PIPING SHALL BE ACTIVELY VENTILATED FOR A PERIOD OF AT LEAST 24 HOURS TO REMOVE VOCS ASSOCIATED WITH PVC PIPE PRIMERS AND GLUES.

D. CONCRETE WORK

1. SURFACE PREPARATION

1.1. SURFACES TO RECEIVE CONCRETE SHALL BE GRADED, COMPACTED, AND PREPARED AS DESCRIBED IN THIS SECTION AND AS SHOWN ON THE DRAWINGS.

1.2. FILL MATERIAL SHALL BE SOIL OR ROCK MATERIAL THAT IS EITHER REMOVED FROM EXCAVATIONS PERFORMED IN CONJUNCTION WITH THE WORK OR IMPORTED TO THE SITE. IT SHALL BE FREE OF ROCK OR HARD PARTICLES LARGER THAN 2 INCHES IN ANY DIMENSION AND SHALL NOT INCLUDE ROOTS, DEBRIS, WASTE, VEGETATION, OR OTHER DELETERIOUS MATERIAL. IF IMPORTED, FILL MATERIAL SHALL BE CERTIFIED CLEAN FILL FROM A SOURCE APPROVED BY THE ENGINEER. NO RECYCLED MATERIAL SHALL BE USED.

1.3. AGGREGATE BASE MATERIAL SHALL CONFORM TO CALTRANS SPECIFICATIONS FOR ¾-INCH MAXIMUM CLASS 2 MATERIAL. NEW MATERIAL SHALL BE SUPPLIED.

1.4. IN AREAS TO RECEIVE CONCRETE, CONTRACTOR SHALL REMOVE ALL EXISTING COBBLES, ASPHALT, AGGREGATE BASE, CONCRETE, VEGETATION, AND DEBRIS. WHERE ASPHALT OR CONCRETE SURFACES ARE TO BE PARTIALLY REMOVED, THEY SHALL BE SAWCUT TO A CLEAN EDGE A MINIMUM OF 1 FOOT BEYOND THE PLANNED LIMITS OF NEW CONSTRUCTION. SUFFICIENT MATERIAL SHALL BE REMOVED TO ESTABLISH A SMOOTH UNIFORM SURFACE FOR NEW CONSTRUCTION.

1.5. GRADING SHALL BE PERFORMED AS REQUIRED TO ACHIEVE THE SUBGRADE AND FINAL SURFACE ELEVATIONS INDICATED ON THE DRAWINGS. AREAS SHALL BE GRADED TO A SMOOTH UNIFORM SURFACE AND SHALL BE SLOPED UNIFORMLY BETWEEN POINTS WHERE ELEVATIONS ARE GIVEN OR BETWEEN SUCH POINTS AND THE EXISTING GRADE.

1.6. WHERE FILL IS REQUIRED TO ACHIEVE DESIGN GRADES, EXISTING MATERIAL SHALL BE SCARIFIED AND COMPACTED TO A DEPTH OF 4 INCHES BEFORE PLACING FILL MATERIAL. FILL SHALL BE PLACED IN LOOSE LIFTS NOT TO EXCEED 6 INCHES AND COMPACTED TO 90% MAXIMUM DENSITY, EXCEPT THAT THE TOP 6 INCHES OF MATERIAL SHALL BE COMPACTED TO 95% MAXIMUM DENSITY PER ASTM D1557.

1.7. WHERE EXCAVATION IS REQUIRED TO ACHIEVE DESIGN GRADES, CONTRACTOR SHALL SCARIFY THE EXPOSED EXCAVATED SURFACE TO A DEPTH OF AT LEAST 4 INCHES AND RECOMPACT TO 95% MAXIMUM DENSITY BEFORE PLACING AGGREGATE BASE.

1.8. A LAYER OF AGGREGATE BASE MATERIAL SHALL BE PLACED BENEATH NEW CONCRETE. AGGREGATE BASE LAYER THICKNESS SHALL BE AS SHOWN ON THE DRAWINGS. AGGREGATE BASE SHALL BE COMPACTED TO 95% MAXIMUM DENSITY.

1.9. CONTRACTOR SHALL PROVIDE COMPACTION CERTIFICATES FROM A CERTIFIED GEOTECHNICAL TESTING AGENCY FOR EVERY 500 SQUARE FEET (AND FRACTION THEREOF) OF COMPACTED SUBGRADE AND COMPACTED AGGREGATE BASE. FOR INDIVIDUAL CONCRETE MOUNTING PADS, A MINIMUM OF ONE CERTIFICATE SHALL BE PROVIDED FOR EACH INDIVIDUAL LOCATION.

2. CONCRETE MATERIALS

2.1. UNLESS OTHERWISE SPECIFIED, CONCRETE SHALL BE NORMAL WEIGHT AND SHALL DEVELOP A MINIMUM 28-DAY COMPRESSIVE STRENGTH OF 3,000 POUNDS PER SQUARE INCH (PSI) WHEN TESTED IN ACCORDANCE WITH ASTM C39.

2.2. CONCRETE MIX SHALL INCLUDE TYPE 2 PORTLAND CEMENT CONFORMING WITH ASTM C150.

2.3. CONCRETE SHALL CONTAIN A MINIMUM OF 520 POUNDS OF CEMENT PER CUBIC YARD.

2.4. CONCRETE SHALL CONTAIN SECONDARY FIBROUS REINFORCEMENT SUCH AS FIBERMESH MICRO-REINFORCEMENT OR APPROVED EQUAL, PROPORTIONED AND ADDED TO THE CONCRETE MIX IN ACCORDANCE WITH MANUFACTURER'S RECOMMENDATIONS.

2.5. CONCRETE SLUMP SHALL NOT EXCEED 4 INCHES WHEN TESTED PER ASTM C143.

2.6. ONLY SOUND AGGREGATE MEETING THE REQUIREMENTS OF ASTM C33 SHALL BE USED. MAXIMUM AGGREGATE DIAMETER SHALL BE 1.5 INCHES.

2.7. WATER USED IN CEMENT MIXTURE, IN COMPACTION, AND OTHERWISE USED AT THE SITE SHALL BE CLEAN, POTABLE, AND FREE OF HARMFUL AMOUNTS OF ACIDS, ALKALIS, AND ORGANIC COMPOUNDS.

2.8. CONTRACTOR SHALL SPECIFY THE CONCRETE MIX AND FURNISH A COPY OF THESE SPECIFICATIONS TO THE CONCRETE SUPPLIER AND REQUEST THE CONCRETE SUPPLIER PROVE ITS MIX AT NO ADDITIONAL COST TO OWNER. INFORMATION CONTAINING TYPE AND AMOUNT OF CEMENT PER CUBIC YARD, COMPRESSIVE STRENGTH, VOLUME OR WEIGHT OF WATER, SLUMP, TYPE AND WEIGHT OF FINE AND COARSE AGGREGATES, AND TYPE AND AMOUNT OF ADMIXTURES SHALL BE MADE AVAILABLE TO THE ENGINEER BY THE CONTRACTOR PRIOR TO BEGINNING OF CONCRETE WORK.

2.9. NOMINAL REINFORCEMENT SHALL BE PLACED IN THE CONCRETE. STEEL MESH REINFORCEMENT SHALL BE NEW BILLET STEEL CONFORMING WITH ASTM A615, GRADE 60.

2.10. WIRE TIES FOR STEEL REINFORCEMENT SHALL BE 16-GAGE ANNEALED STEEL.

2.11. FORM LUMBER FOR EXPOSED CONCRETE SHALL BE PS 1 PLYFORM GRADE B-B CLASS I OR II. FORM LUMBER FOR CONCEALED CONCRETE SHALL BE WOOD BOARD OR PLYWOOD. FORM FRAMING SHALL BE OF WEST COAST LUMBER INSPECTION BUREAU (WCLIB) STANDARD GRADE OR BETTER DOUGLAS FIR.

2.12. FORM RELEASE COMPOUNDS SHALL BE NON-INJURIOUS TO CONCRETE OR FINISHES, SUCH AS BURKE "FORM RELEASE WB" OR APPROVED EQUAL.

2.13. CURING COMPOUND SHALL BE BURKE "AQUA RESIN CURE" SPRAY-APPLIED CURING COMPOUND OR APPROVED EQUAL COMPATIBLE WITH FINISHES PER ASTM C309, TYPE I, CLASS A & B.

2.14. CONCRETE SEALANT SHALL BE XYPEX CONCENTRATE OR APPROVED EQUAL.

3. CONCRETE INSPECTION

3.1. IN ALL CASES, CONTRACTOR SHALL COORDINATE WITH ENGINEER TO PERFORM INSPECTION OF SURFACE PREPARATION, STEEL REINFORCEMENT, AND FORMS, BEFORE CONCRETE IS POURED. ENGINEER IN COORDINATION WITH THE OWNER AND TENANT SHALL PROVIDE THE CONCRETE COLOR TO THE CONTRACTOR. ANY CONCRETE DYE OR STAIN COLOR SELECTION SHALL BE APPROVED BY FIELD ENGINEER BEFORE USE.

4. CONCRETE INSTALLATION

4.1. FORMWORK SHALL BE CONSTRUCTED IN CONFORMANCE WITH ACI 347. FORM RELEASE COMPOUND SHALL BE APPLIED BEFORE CONCRETE PLACEMENT IN ACCORDANCE WITH MANUFACTURER RECOMMENDATIONS.

4.2. REINFORCEMENT SHALL BE PLACED AS NOTED ON DRAWINGS. MINIMUM CONCRETE COVER OVER REINFORCEMENT SHALL BE 3 INCHES FOR CONCRETE PLACED AGAINST EARTH OR 2 INCHES FOR FORMED CONCRETE WHICH WILL LATER BE EXPOSED TO EARTH. WIRE MESH REINFORCEMENT SHALL BE SUPPORTED AND FASTENED SECURELY WITH SPACERS, DOBIES/CHAIRS, OR TIES TO PERMIT THEIR BEING WALKED UPON WITHOUT DISPLACEMENT OR MOVEMENT BEFORE OR DURING PLACEMENT OF CONCRETE. ANY REINFORCEMENT SEAMS SHALL BE WIRE-TIED PER CRSI RECOMMENDATIONS. WHEREVER CONDUITS, PIPING, INSERTS, SLEEVES, OR OTHER PENETRATIONS OR EMBEDDED ITEMS INTERFERE WITH PLACEMENT OF REINFORCEMENT, OBTAIN ENGINEER'S APPROVAL OF PLACEMENT BEFORE POURING CONCRETE.

4.3. CONCRETE SHALL BE MIXED OFFSITE AND DELIVERED IN ACCORDANCE WITH ASTM C94. MIXING OF CONCRETE ON-SITE FOR MINOR ELEMENTS (EXTRACTION AND MONITORING POINT VAULTS, FENCE POSTS, ETC.) MAY BE ALLOWED AT THE DISCRETION OF THE ENGINEER. ON-SITE MIXING SHALL BE IN CONFORMANCE WITH ACI 318-05, SECTION 5.8.

4.4. CONCRETE SHALL BE DEPOSITED IN ACCORDANCE WITH ACI 318-05, SECTION 5.10. IN GENERAL, CONTRACTOR SHALL CONVEY CONCRETE AS RAPIDLY AND DIRECTLY AS PRACTICABLE TO PRESERVE QUALITY AND TO PREVENT SEPARATION FROM RE-HANDLING AND FLOWING. CONTRACTOR SHALL PREVENT OVERWORKING AND AGGREGATE SEGREGATION. HOWEVER, THE CONCRETE SHALL BE ADEQUATELY TAMPED OR VIBRATED TO PREVENT VOIDS.

4.5. CONCRETE SHALL BE FINISHED WITH A WOOD FLOAT AND SHALL HAVE CORNERS AND EDGES NEATLY BEVELED. EXPOSED OUTDOOR SLAB SURFACES SHALL RECEIVE A FINAL MEDIUM-BROOM FINISH.

4.6. CONCRETE SHALL BE PROTECTED FROM LOSS OF MOISTURE FOR AT LEAST 7 DAYS AFTER PLACEMENT USING A COMBINATION OF WET CURING (E.G., WETTED BURLAP COVER) OR MEMBRANE CURING (E.G., SPRAY-APPLIED COMPOUND) METHODS. CURING BY COVERING CONCRETE WITH PLASTIC SHEETING OR WATERPROOF PAPER SHALL NOT BE PERMITTED. SPRAY-APPLIED CURING COMPOUND SHALL BE APPLIED PER MANUFACTURER'S RECOMMENDATIONS.

4.7. CONCRETE SEALANT SHALL BE APPLIED AS RECOMMENDED BY SEALANT MANUFACTURER.

4.8. FORMWORK SHALL BE LEFT IN PLACE FOR A MINIMUM OF 3 DAYS AFTER CONCRETE PLACEMENT. NO FOOT TRAFFIC SHALL BE PERMITTED ON FRESHLY PLACED CONCRETE FOR A MINIMUM OF 1 DAY AFTER PLACEMENT. CONTRACTOR SHALL PROTECT FRESH CONCRETE FROM CONSTRUCTION TRAFFIC USING PLYWOOD OR SIMILAR MEANS. NO VEHICLE OR EQUIPMENT LOADS SHALL BE PERMITTED ON THE FINISHED CONCRETE FOR A MINIMUM OF 7 DAYS WITHOUT APPROVAL OF ENGINEER. CONTRACTOR MAY SUBMIT SPECIFICATIONS FOR ENGINEER APPROVAL IF USE OF QUICK SETTING CONCRETE IS RECOMMENDED.

E. EXTRACTION AND MONITORING POINTS INSTALLATION

1. PRIOR TO CORING EXISTING SLAB, ALL POTENTIAL CORING LOCATIONS ASSOCIATED WITH ANY PROPOSED EXTRACTION OR MONITORING POINT SHALL BE SCANNED USING GROUND PENETRATING RADAR (GPR) OR APPROVED EQUIVALENT TECHNOLOGY TO LOCATE REINFORCING STEEL ELEMENTS IN THE SLAB (I.E., #5 DOWELS AT 24 INCHES ON-CENTER AND LONGITUDINAL #3 BARS IN EXISTING SLAB). GPR SCANNING SHALL BE CONDUCTED USING A GSSI SIR-3000 MODEL GPR CONTROL UNIT WITH A 1,500 MEGAHERTZ (MHZ) ANTENNA OR APPROVED EQUIVALENT. FINAL SLAB CORING LOCATIONS MAY BE LATERALLY SHIFTED AS NECESSARY, WITH FIELD ENGINEER'S APPROVAL, TO ALLOW FOR MINIMUM 2" CLEARANCE AROUND STEEL ELEMENTS. CONTRACTOR SHALL COORDINATE WITH ENGINEER TO SCHEDULE OBSERVATION AND OBTAIN APPROVAL OF CORING LOCATIONS BY A LICENSED STRUCTURAL ENGINEER.
2. CORING SHALL BE HORIZONTALLY ADVANCED FROM VERTICAL FACE OF SLAB TO A HORIZONTAL "DEPTH" SUFFICIENT TO REACH THE ANTICIPATED 4-INCH THICK SUB-SLAB COARSE GRAVEL LAYER, ENCOUNTERED APPROXIMATELY 5 FEET LATERALLY FROM THE BUILDING EXTERIOR DURING PILOT TEST ACTIVITIES. FOLLOWING CORING, A SMALL AMOUNT OF COARSE GRAVEL MATERIAL SHALL BE REMOVED TO REDUCE INLET PRESSURE LOSSES AND TO ENHANCE FLOW.
3. CORING DIAMETER SHALL BE 5 INCHES FOR EXTRACTION POINTS (EPS) AND 3 INCHES FOR MONITORING POINTS (MPS), RESPECTIVELY, SELECTED IN ACCORDANCE WITH SPECIFICATIONS OF LINK-SEAL® ANNULAR SEAL PRODUCT FOR 1 INCH AND 3 INCH PIPE. FOLLOWING CORE REMOVAL, ALL CORED LOCATIONS SHALL BE CLEANED WITH A DAMP CLOTH TO REMOVE DEBRIS BEFORE PLACEMENT OF ANNULAR SEAL.
4. AN APPROXIMATELY 5-FOOT LENGTH OF SCHEDULE 80 PVC PIPE (MODIFIED AS NEEDED FOR DEEPER OR SHALLOWER CORINGS), FITTED AT THE END WITH A COARSE MESH STAINLESS STEEL SCREEN, SHALL BE INSTALLED IN DIRECT CONTACT WITH THE SUB-SLAB COARSE GRAVEL LAYER.
5. TWO LINK-SEAL® EXPANDABLE RING SEALS SHALL BE INSTALLED AT EACH EP AND MP CORING. CONTRACTOR TO CONFIRM THE THICKNESS OF FOOTING AND TARGET LOCATION OF THE INNER SEAL WITH FIELD ENGINEER AT EACH LOCATION, WITH TARGET PLACEMENT INSET 16 INCHES FROM FACE OF SLAB WHERE POSSIBLE. OUTER SEAL SHALL NOT PROTRUDE BEYOND THE BUILDING EXTERIOR.
6. BETWEEN THE TWO RING SEALS, GROUT SEAL FOR ANNULAR VOID AROUND THE PVC PIPING SHALL BE CONFIRMED WITH FIELD ENGINEER, WITH A MINIMUM 13-INCH GROUT SEAL WITHIN THE CONCRETE SLAB WHERE POSSIBLE. SEAL SHALL BE BASF "CONSTRUCTION GROUT RC" NON-SHRINKING GROUT, CONTAINING NO PRIORITY POLLUTANT VOLATILE ORGANIC COMPOUNDS (VOCS), MIXED ACCORDING TO MANUFACTURER'S INSTRUCTIONS. CONTRACTOR SHALL RECOMMEND GROUT PLACEMENT METHOD FOR ENGINEER APPROVAL, WHICH SHALL CONSIDER AVOIDANCE OF VOID SPACES IN THE ANNULAR SEAL.
7. AT EACH EP OR MP LOCATION, A LOCKABLE UTILITY VAULT SHALL BE PROVIDED TO HOUSE PIPING AND APPURTENANCES. VAULT SHALL BE SIZED APPROXIMATELY 24-INCH SQUARE AND 12-INCH SQUARE AT EACH EP AND MP LOCATION, RESPECTIVELY, AND SHALL INCLUDE A WATER-TIGHT, LOCKABLE LID RATED FOR HEAVY PEDESTRIAN TRAFFIC. VAULT SHALL BE INSTALLED OUTSIDE THE FOUNDATION WALL, WITH FINISH HEIGHT ABOVE SURROUNDING GRADE BY APPROXIMATELY 1-INCH (LANDSCAPE AREAS) OR ¼-INCH (FOOT-TRAFFIC AREAS), TO BE CONFIRMED WITH FIELD ENGINEER IN ALL CASES. ALL SHALL HAVE MINIMUM 2-INCH THICK ROUNDED DRAIN ROCK AS BOTTOM LAYER, WITH NO CONCRETE IN VAULT BOTTOM. CLEARANCE BETWEEN DRAIN ROCK AND PVC PIPING SHALL BE A MINIMUM OF 4 INCHES. VAULT APRON SHALL BE 4-INCH WIDE CONCRETE TO FULL DEPTH OF VAULT ON ALL SIDES.
8. FOLLOWING EACH EP LOCATION, A METERING BOX SHALL BE INSTALLED TO PROVIDE ACCESS TO METERING TAP-AND-PLUG CONFIGURATION. METERING BOX SHALL BE PLACED A MINIMUM DISTANCE OF 15X PIPE DIAMETER UPSTREAM AND 10X PIPE DIAMETER DOWNSTREAM FROM NEAREST FLOW OBSTRUCTION. METERING BOX SHALL BE CHRISTY-TYPE OR ENGINEER-APPROVED EQUIVALENT, AND SHALL INCLUDE A WATER-TIGHT, TAMPER-RESISTANT, LID RATED FOR HEAVY PEDESTRIAN TRAFFIC. BOX SHALL BE INSTALLED WITH FINISH HEIGHT ABOVE SURROUNDING GRADE BY APPROXIMATELY 1-INCH (LANDSCAPE AREAS) OR 1/4 INCH (FOOT-TRAFFIC AREAS), TO BE CONFIRMED WITH FIELD ENGINEER IN ALL CASES. ALL SHALL HAVE MINIMUM 2-INCH THICK ROUNDED DRAIN ROCK AS BOTTOM LAYER, WITH NO CONCRETE IN BOX BOTTOM. BOX APRON SHALL BE 4-INCH WIDE CONCRETE TO FULL DEPTH OF BOX ON ALL SIDES.
9. CONTRACTOR TO FIELD-FIT SLOPE AS NOTED. CONTRACTOR MAY, WITH ENGINEER'S APPROVAL, USE A MINIMAL LENGTH OF REINFORCED PVC HOSE TO ACCOMMODATE ALIGNMENT.
10. PVC PIPE PENETRATIONS TO VAULTS AND METERING BOXES SHALL INCLUDE 1/4" THICK FOAM PIPE WRAP, OR EQUIVALENT WITH ENGINEER'S APPROVAL, TO PROTECT PIPE FROM RESPECTIVE VAULT OR METERING BOXES SETTLING.

F. EQUIPMENT INSTALLATION

1. THE CONTRACTOR SHALL BE RESPONSIBLE FOR COORDINATING WITH TREATMENT EQUIPMENT VENDORS FOR SCHEDULING DELIVERIES, OFFLOADING (INCLUDING LABOR AND ANY REQUIRED EQUIPMENT), AND PLACEMENT OF ENGINEER-SUPPLIED TREATMENT EQUIPMENT. EQUIPMENT VENDORS INCLUDE SIEMENS INDUSTRY, INC. (510-289-7215) AND JEFFERIES ELECTRIC (805-459-0855). CONTRACTOR BECOMES RESPONSIBLE FOR EQUIPMENT UPON ARRIVAL ON SITE.
2. CONTRACTOR SHALL INSTALL EQUIPMENT AS PER THE SPECIFICATIONS PROVIDED IN THE DRAWINGS AND BY THE MANUFACTURER/SUPPLIER. ANY CHANGES, INCLUDING THOSE DUE TO UNKNOWN FIELD CONDITIONS, SHALL BE COMMUNICATED TO THE ENGINEER AND MODIFICATIONS SHALL BE MADE WITH THE APPROVAL OF THE ENGINEER.
3. CONTRACTOR IS ADVISED THAT SOME ELEMENTS OF THE WORK MAY REQUIRE SPECIAL INSPECTIONS FOR CODE COMPLIANCE. IF SO, THE ENGINEER WILL PROVIDE A LIST OF PROJECT ELEMENTS REQUIRING SPECIAL INSPECTION TO THE CONTRACTOR AT THE START OF CONSTRUCTION. ENGINEER WILL ARRANGE FOR SPECIAL INSPECTIONS BASED ON CONTRACTOR'S SCHEDULE OF CONSTRUCTION ACTIVITIES. CONTRACTOR SHALL NOTIFY ENGINEER AT LEAST 72 BUSINESS HOURS IN ADVANCE OF ANY CONSTRUCTION ACTIVITIES REQUIRING SPECIAL INSPECTION.
4. ALL EQUIPMENT ENCLOSURES SHALL BE ADEQUATELY ANCHORED, USING HILTI KWIK BOLT TZ KB-TW SS304 1/4" X 3 1/4" SIZE WITH 2" MINIMUM EMBEDMENT DEPTH. FOUR ANCHORS SHALL BE PROVIDED FOR EACH ENCLOSURE. ALL ANCHORS SHALL BE SET A MINIMUM OF 6" FROM EDGE OF SLAB.

G. ELECTRICAL

1. ALL ELECTRICAL WORK SHALL BE PERFORMED BY A LICENSED ELECTRICAL CONTRACTOR. ELECTRICAL CONTRACTOR SHALL BE RESPONSIBLE FOR COORDINATING WITH CMVBD AS REQUIRED TO COMPLETE ELECTRICAL WIRING WORK.
2. CONTRACTOR SHALL BE RESPONSIBLE FOR COORDINATING AND ASSISTING ELECTRICAL CONTRACTOR WITH MINOR CONSTRUCTION WORK AS REQUIRED FOR COMPLETING ELECTRICAL WIRING.
3. CONTRACTOR SHALL COORDINATE AND COOPERATE WITH ELECTRICAL CONTRACTOR FOR EFFICIENT AND TIMELY COMPLETION OF THE PROJECT. CONTRACTOR SHALL SHARE THE SPACE AS NECESSARY WITH THE ELECTRICAL CONTRACTOR AND MUTUALLY PUT FORWARD BEST GOOD-FAITH EFFORTS FOR THE SUCCESSFUL COMPLETION OF THE PROJECT.
4. ELECTRICAL SPECIFICATIONS

4.1. ELECTRICAL CONTRACTOR TO EVALUATE AND RECOMMEND ELECTRICAL WIRING DIAGRAM, AND ALSO TO EVALUATE AND PREPARE BLOWER AND TELEMETRY ELECTRICAL CONNECTION TO EXISTING POWER ON SITE.

4.2. ALL ELECTRICAL CONSTRUCTION SHALL COMPLY WITH THE NATIONAL ELECTRICAL CODE AND CODE OF THE CITY OF MOUNTAIN VIEW.

4.3. ELECTRICAL CONTRACTOR SHALL PROVIDE SPECIFICATION FOR CONNECTION TO EXISTING POWER, INCLUDING ANY NECESSARY TRENCHING, CONDUIT SIZING, WIRE SIZING, AND APPURTENANCES, FOR ENGINEER REVIEW AND APPROVAL.

4.4. ALL EQUIPMENT TO BE LISTED AND APPROVED FOR THE INTENDED USE.

4.5. ALL ABOVE-GROUND CONDUITS TO BE RIGID GALVANIZED STEEL. ALL MOTORS TO BE CONNECTED WITH LIQUID-TIGHT, FLEXIBLE METAL CORE CONDUIT.

4.6. TELEMETRY SHALL BE PROVIDED TO ALLOW FOR IMMEDIATE NOTIFICATION VIA TEXT MESSAGE DURING ANY INTERRUPTION IN OPERATION OF ANY BLOWER. CONTRACTOR SHALL PROPOSE TELEMETRY CONFIGURATION AND SPECIFY EQUIPMENT.

4.7. VENTILATION FAN WITH THERMOSTAT SHALL BE PROVIDED TO CONTROL THE TEMPERATURE INSIDE EACH EQUIPMENT ENCLOSURE. THE THERMOSTATS SHALL BE SET TO INITIATE VENTILATION FAN OPERATION WHEN THE INTERIOR TEMPERATURE REACHES 90°F.

(GENERAL SPECIFICATIONS CONTINUED ON G-3)

0 1" 2"
ORIGINAL SCALE

SCALE IS BASED ON 22" X 34" NON-REDUCED SHEET SIZE (BORDER = 21" X 32")

REVISIONS

NO.	DESCRIPTION	DATE	BY

CLIENT:
SCHLUMBERGER TECHNOLOGY CORPORATION
105 INDUSTRIAL BOULEVARD
SUGARLAND, TEXAS 77478

ENGINEER:
Geosyntec consultants
1111 BROADWAY 6TH FLOOR
OAKLAND, CA 94607
PHONE: (510) 285-2759
FAX: (510) 836-3036

GENERAL AND CONSTRUCTION SPECIFICATIONS

SSD SYSTEM CONSTRUCTION DRAWINGS
369 / 379 NORTH WHISMAN ROAD
MOUNTAIN VIEW, CALIFORNIA 94043

DESIGN DRAWINGS

DES BY: LK	DATE: SEPTEMBER 2013
DRN BY: MC, JA, MH	SCALE: NTS
CHK BY: LK	PROJECT: WR1133A
REV BY:	DOCUMENT:
APP BY: SR	
FILE: WR1133A-G-2.DWG	

DRAWING NO.
G-2

P:\PRJ2003\REMMEW Fairchild\06_Vapor Intrusion\369-399 Whisman & 468 Ellis\VI Dsgn\Design\Design Dwg\CADD\WR1133A-G-2.dwg Last Edited by: SKhalameyzer on 9/19/2013 10:42 AM

GENERAL SPECIFICATIONS (CONTINUED)

H. SYSTEM START-UP

1. CONTRACTOR SHALL PERFORM THIS TASK IN COORDINATION WITH THE ELECTRICIAN.
2. THIS TASK SHALL INCLUDE ALL EFFORTS AND MATERIALS REQUIRED TO DEMONSTRATE THAT ALL OPERATIONAL FEATURES OF THE SYSTEM ARE WORKING PROPERLY IN BOTH MANUAL AND AUTOMATIC OPERATIONAL MODES. FUNCTIONAL TESTING SHALL INCLUDE INITIAL AND FINAL TESTS AS DESCRIBED BELOW, AND THE SUBMITTAL OF VENDOR- OR MANUFACTURER-SUPPLIED PRODUCT MANUALS.
3. FUNCTIONAL TESTS SHALL VERIFY THAT:

3.1. ELECTRICAL TESTS, METER READINGS, AND SPECIFIED ELECTRICAL CHARACTERISTICS AGREE WITH THOSE REQUIRED BY THE EQUIPMENT MANUFACTURER.

3.2. WIRING AND SUPPORT COMPONENTS FOR EQUIPMENT ARE COMPLETE AND TESTED.

3.3. FIELD DEVICES ARE CALIBRATED, ACCURATE, FUNCTION AS INTENDED, AND ARE CERTIFIED BY THE ENGINEER.

3.4. EACH EXTRACTION UNIT HAS ACHIEVED ONE (1) HOUR OF CONTINUOUS OPERATION.

3.5. ALL SAFETY SHUTDOWN FUNCTIONS ARE TESTED.

4. ENGINEER WILL EVALUATE THE EXTRACTION AND TREATMENT SYSTEM START UP. ANY MODIFICATIONS, REPAIR, OR ADJUSTMENTS REQUIRED TO SAFELY AND EFFICIENTLY OPERATE THE SYSTEM WILL BE COMMUNICATED AND SHALL BE ADDRESSED IN TIMELY MANNER BY THE CONTRACTOR AND ELECTRICIAN.

4.1. ELECTRICAL CONTRACTOR TO EVALUATE AND RECOMMEND ELECTRICAL SINGLE-LINE DIAGRAM, AND ALSO TO EVALUATE AND PREPARE BLOWER AND TELEMETRY ELECTRICAL CONNECTION TO EXISTING POWER ON SITE. ALL WORK TO BE PERFORMED BY LICENSED ELECTRICAL CONTRACTOR.

4.2. ALL ELECTRICAL CONSTRUCTION SHALL COMPLY WITH THE NATIONAL ELECTRICAL CODE AND THAT OF THE CITY OF MOUNTAIN VIEW.

4.3. ALL CONDUCTORS TO BE STRANDED COPPER WIRE TYPE THWN-2, MAXIMUM 14 GAUGE, AND SHALL BE APPROVED BY FIELD ENGINEER PRIOR TO INSTALLATION.

4.4. ALL EQUIPMENT TO BE LISTED AND APPROVED FOR THE INTENDED USE.

4.5. ALL ABOVE-GROUND CONDUITS TO BE RIGID GALVANIZED STEEL.

4.6. ALL MOTORS TO BE CONNECTED WITH LIQUID-TIGHT, FLEXIBLE METAL CORE CONDUIT.

4.7. TELEMETRY SHALL BE PROVIDED TO ALLOW FOR IMMEDIATE NOTIFICATION DURING ANY INTERRUPTION IN OPERATION OF ANY BLOWER. CONTRACTOR SHALL PROPOSE TELEMETRY CONFIGURATION AND SPECIFY EQUIPMENT.

I. WARRANTY

1. THE CONTRACTOR SHALL WARRANTY ALL CONTRACTOR-PROVIDED MATERIALS AND CONSTRUCTION FOR A PERIOD OF ONE YEAR FROM THE DATE OF ACCEPTANCE BY THE OWNER/ENGINEER. ANY REQUIRED WARRANTY WORK SHALL BE PROMPTLY MADE BY THE CONTRACTOR AT NO COST TO OWNER. IN THE EVENT OF CONTRACTOR-SUPPLIED EQUIPMENT FAILURE, THE CONTRACTOR SHALL RESPOND WITHIN 48 HOURS. WARRANTY REPAIRS SHALL COMPLY WITH THE PROVISIONS OF THIS SPECIFICATION.

J. CONSTRUCTION SCHEDULE

1. THE CONTRACTOR, ENGINEER, AND OWNER SHALL AGREE UPON A START DATE. THE CONTRACTOR SHALL COMPLETE THE JOB IN 4-6 WEEKS FROM THE START DATE, UNLESS ANOTHER SCHEDULE IS AGREED UPON IN WRITING (XX TO BE FINALIZED, MAY SPECIFY WEEKEND WORK XX).

K. AS-BUILT DRAWINGS - PERMIT

1. CONTRACTOR SHALL PROVIDE THE ENGINEER A SET OF AS-BUILT DRAWINGS DEPICTING THE PRECISE LOCATION OF ALL INSTALLED SYSTEMS AND ELECTRICAL COMPONENTS, INCLUDING THE SIZE OF ALL PIPING AND CONDUIT USED IN TRENCHES. THE AS-BUILT DRAWINGS SHALL BE TO SCALE. THE CONTRACTOR SHALL SURVEY THE PIPING LAYOUT, EQUIPMENT AND COMPOUND.
2. CONTRACTOR SHALL PROVIDE THE ENGINEER ALL SIGNED AND APPROVED PERMITS, IF ANY, WITH THE AS-BUILT DRAWINGS PRIOR TO FINAL PAYMENT.

MATERIAL AND EQUIPMENT LIST

Material/Equipment	Quantity	Manufacturer	Model No.	Specification
1. Equipment Enclosure (Client supplied)				
Extraction and Treatment System	4	Siemens Industry, Inc.	Vent Scrub® 200 Fan Package	--
200 lb Carbon Drum	4	Siemens Industry, Inc.	Vent Scrub® VSC-200	4mm Pellets
Blower EP-side	2	Cincinnati Fan	PB-10A	10.7 IWG, 104 ACFM, 3/4 hp Motor
Blower EP-side and EP-center	2	Cincinnati Fan	PB-14A	12 IWG, 104 ACFM, 3/4 hp Motor
Incidental Mounting Hardware and Fittings	--	--	--	--
Customizable All-Weather Cabinet	4	Hoffman Electric	A72H3724FS3PT -MOD, NEMA 4-Rated, Custom Size, Low Threshold	36" x 36" x 72"
2. Extraction Points				
Vault	5	Contractor to Specify	Contractor to Specify	24" x 24" Size with Locking Lid
Link-Seal®	10	Link-Seal	LS CS 5 16	Seal for 3" PVC
Ball Valve	5	Contractor to Specify	Contractor to Specify	3" PVC, SCH 80, True-Union
Labcock® Valve Sample Ports	10	Asahi	1078002	1/4 " MT x Hose
Padlock	5	ACE Hardware	TBD	Brass, Resettable Combination, Narrow Hasp
Wye Strainer	4	Contractor to Specify	Contractor to Specify	3" PVC SCH 80 Socket Weld
3. Monitoring Points				
Vault	6	Contractor to Specify	Contractor to Specify	12" x 12" Size with Locking Lid
Link-Seal®	12	Link-Seal	LS CS 3 16	Seal for 1" PVC
Ball Valve	6	Contractor to Specify	Contractor to Specify	1" PVC, SCH 80, True-Union
End Caps	6	Contractor to Specify	Contractor to Specify	1" PVC, SCH 80
Labcock® Valve Sample Ports	12	Asahi	1078002	1/4 " MT x Hose
Padlock	6	ACE Hardware	TBD	Brass, Resettable Combination, Narrow Hasp
4. Metering Box				
Vault	8	Contractor to Specify	Contractor to Specify	8" Diameter foot traffic rated
Plug	8	Contractor to Specify	Contractor to Specify	1/2" NPT
5. Telemetry				
Auto-Dialer	2	Sensaphone	CELL 682	Cellular auto dialer, integrated all-weather box

SYMBOLS

BALL VALVE
BLOWER
CHECK VALVE
DOOR
DRAIN VALVE
EXPANSION/REDUCING FITTING
FENCE
FENCE GATE
FLEXIBLE HOSE
GROUND FAULT INTERRUPTER
HEAT EXCHANGER
PIPE (ARROW FLOW DIRECTION)
PI — PRESSURE INDICATOR
QUICK CONNECT
SP — SAMPLE PORT
SAMPLE VALVE
WYE STRAINER

SYMBOLS

TAP WITH PLUG
TG — TEMPERATURE GAUGE
VGAC 200 LBS — VAPOR-PHASE GRANULAR ACTIVATED CARBON VESSEL
VENT
WALL
WIRELESS
A — AMPERE GAUGE

SECTION AND DETAIL LEGEND

SECTION CUT

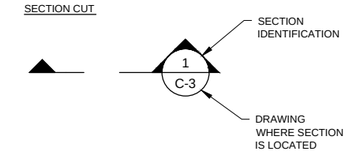

LOCAL SECTION

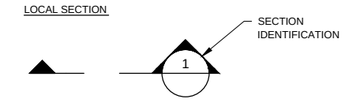

DETAIL CALL OUT

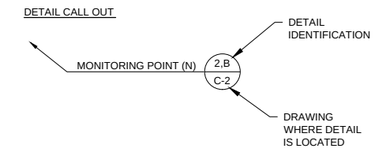

ABBREVIATIONS

TYP	TYPICAL	(E)	EXISTING
SCFM	STANDARD CUBIC FEET PER MINUTE	(N)	NEW
LBS	POUNDS	Ø	DIAMETER
HP	HORSEPOWER		
VGAC	VAPOR-PHASE GRANULAR ACTIVATED CARBON		

0 1" 2"
ORIGINAL SCALE
SCALE IS BASED ON 22" X 34" NON-REDUCED SHEET SIZE (BORDER = 21" X 32")

REVISIONS

NO.	DESCRIPTION	DATE	BY

CLIENT:
SCHLUMBERGER TECHNOLOGY CORPORATION
105 INDUSTRIAL BOULEVARD
SUGARLAND, TEXAS 77478

ENGINEER:
Geosyntec consultants
1111 BROADWAY 6TH FLOOR
OAKLAND, CA 94607
PHONE: (510) 285-2759
FAX: (510) 836-3036

SPECIFICATIONS, EQUIPMENT, AND SYMBOLS LEGEND

SSD SYSTEM CONSTRUCTION DRAWINGS
369 / 379 NORTH WHISMAN ROAD
MOUNTAIN VIEW, CALIFORNIA 94043

DESIGN DRAWINGS

DES BY:	LK	DATE:	SEPTEMBER 2013
DRN BY:	MC, JA, MH	SCALE:	NTS
CHK BY:	LK	PROJECT:	WR1133A
REV BY:			
APP BY:	SR	DOCUMENT:	
FILE:	WR1133A-G-3.DWG		

DRAWING NO.
G-3

P:\PR\2003\REM\MEW Fairchild\06_Vapor Intrusion\369-399 Whisman & 468 Ellis\VI Dsgn\Design\Design Dwg\CADD\WR1133A-G-3.dwg Last Edited by: SKhalamayzer on 9/11/2013 4:05 PM

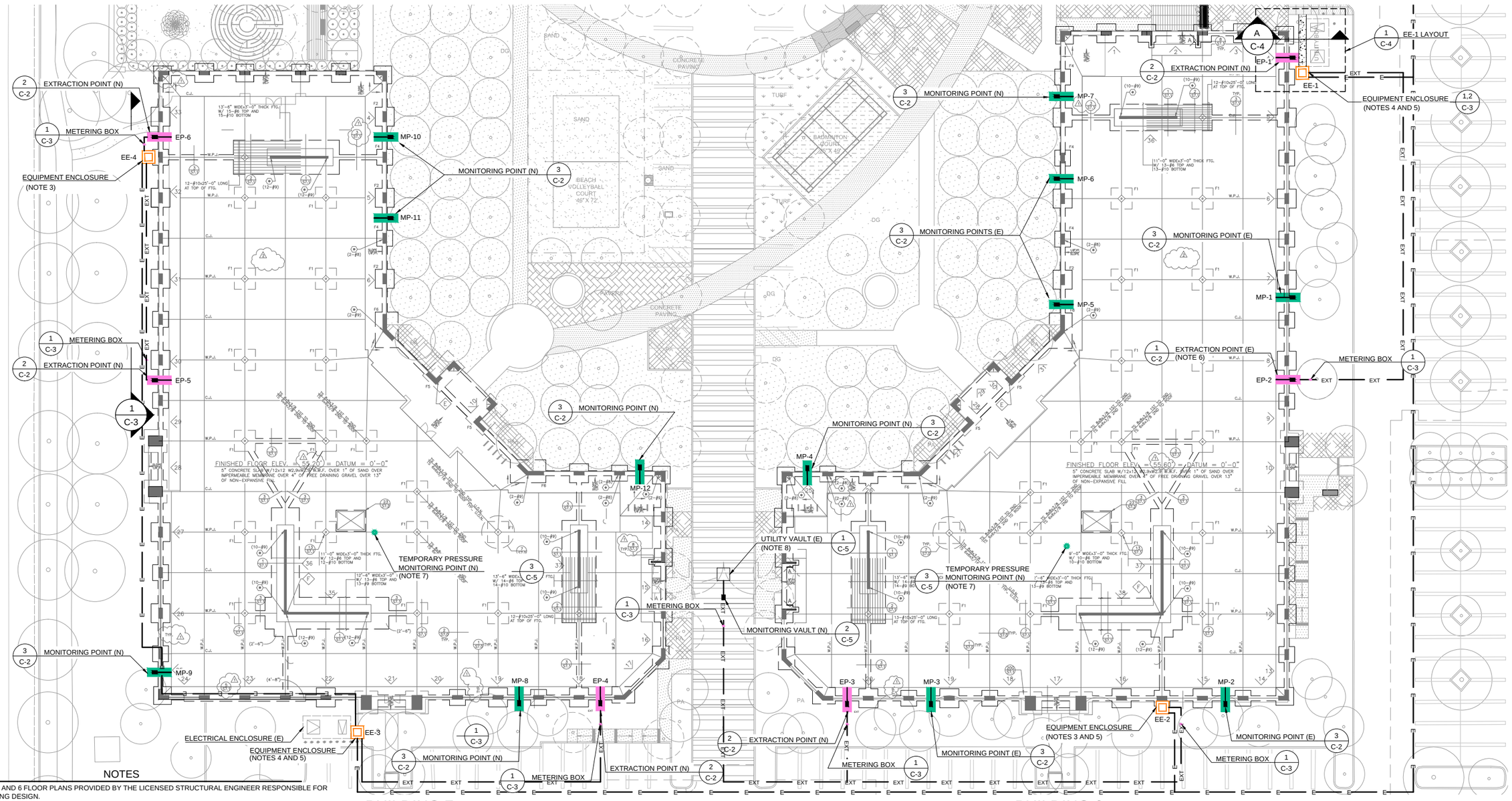

NOTES

1. BUILDING 7 AND 6 FLOOR PLANS PROVIDED BY THE LICENSED STRUCTURAL ENGINEER RESPONSIBLE FOR THE BUILDING DESIGN.
2. FOR FULL SCALE SYSTEM, EXISTING EXTRACTION AND MONITORING POINT NAMES AND NUMBERS HAVE BEEN REASSIGNED. PEP-1 AND PEP-3 ARE RENAMED AS MP-1 AND MP-3, RESPECTIVELY, AND ARE A 3-INCH SIZE. ALL OTHER MONITORING POINTS ARE 1-INCH, AND ALL EXTRACTION POINTS ARE 3-INCH.
3. COLOR TO MATCH BUILDING EXTERIOR.
4. COLOR TO MATCH EXISTING ELECTRICAL ENCLOSURE.
5. THE DETAILS OF THE TYPICAL EQUIPMENT ENCLOSURE AND PIPE ALIGNMENT ARE PRESENTED ON DRAWING C-3, WHICH IS BASED ON LOCATION EE-4. THE EQUIPMENT ENCLOSURE AND THE PIPE ALIGNMENT AT EE-1, EE-2, AND EE-3 WILL BE FIELD-FIT AND APPROVED BY THE ENGINEER.
6. EXISTING EXTRACTION POINT EP-2 TO BE MODIFIED PER NEW EXTRACTION POINT DESIGN AS SHOWN IN DETAIL 2 ON SHEET C-2.
7. TEMPORARY PRESSURE MONITORING POINT WILL BE LOCATED NEAR THE ELEVATOR PIT. THE EXACT LOCATION WILL BE DETERMINED IN THE FIELD IN COLSULTATION WITH ENGINEER / OWNER.
8. LOCATION OF EXISTING UTILITY VAULT IS APPROXIMATE. EXACT LOCATION TO BE VERIFIED IN THE FIELD.

LEGEND

EXTRACTION POINT (EP)	EXTRACTION PIPE
MONITORING POINT (MP)	METERING BOX
TEMPORARY PRESSURE MONITORING POINT	ELECTRICAL AND COMMUNICATION TRENCH
EQUIPMENT ENCLOUSRE	

0 1" 2"
ORIGINAL SCALE

SCALE IS BASED ON 22" X 34" NON-REDUCED SHEET SIZE (BORDER = 21" X 32")

REVISIONS			
NO.	DESCRIPTION	DATE	BY

CLIENT:
SCHLUMBERGER TECHNOLOGY CORPORATION
105 INDUSTRIAL BOULEVARD
SUGARLAND, TEXAS 77478

ENGINEER:
Geosyntec consultants
1111 BROADWAY 6TH FLOOR
OAKLAND, CA 94607
PHONE: (510) 285-2759
FAX: (510) 836-3036

SITE PLAN

SSD SYSTEM CONSTRUCTION DRAWINGS
369 / 379 NORTH WHISMAN ROAD
MOUNTAIN VIEW, CALIFORNIA 94043

DESIGN DRAWINGS

DES BY:	LK	DATE:	SEPTEMBER 2013
DRN BY:	MC, JA, MH	SCALE:	1" = 20'
CHK BY:	LK	PROJECT:	WR1133A
REV BY:		DOCUMENT:	
APP BY:	SR		
FILE:	WR1133A-C-1.DWG		

DRAWING NO.
C-1

P:\PRJ2003\REM\MEW Fairchild\06_Vapor Intrusion\369-399 Whisman & 468 Ellis\VI Dsgn\Design\Design Dwg\CADD\WR1133A-C-1.dwg Last Edited by: MHirst on 8/29/2013 9:35 AM

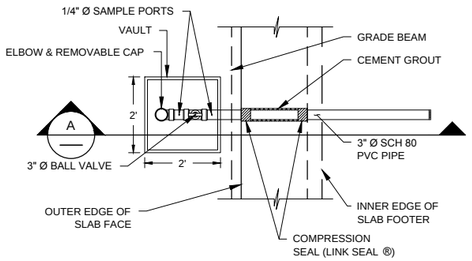

1 / C-1 PLAN
EXTRACTION POINT (E)
SCALE: 1" = 2'

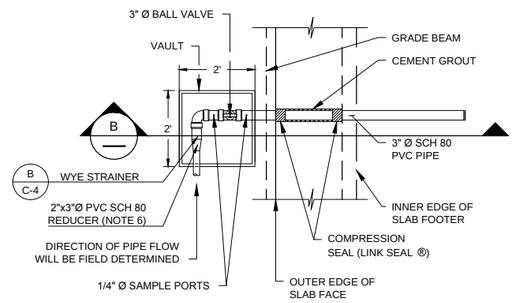

2 / C-1 PLAN
EXTRACTION POINT (N)
SCALE: 1" = 2'

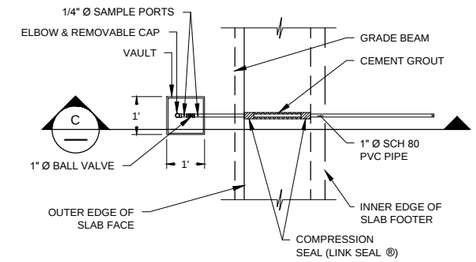

3 / C-1 DETAIL
MONITORING POINT (E AND N) (NOTE 5)
SCALE: 1" = 2'

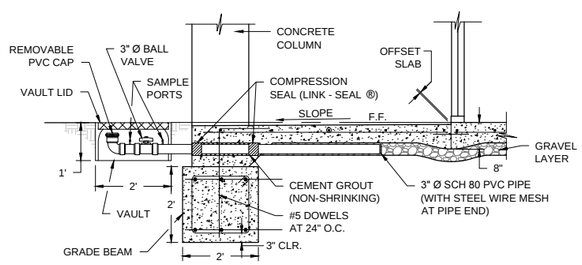

A / — SECTION
EXTRACTION POINT (E)
SCALE: 1" = 2'

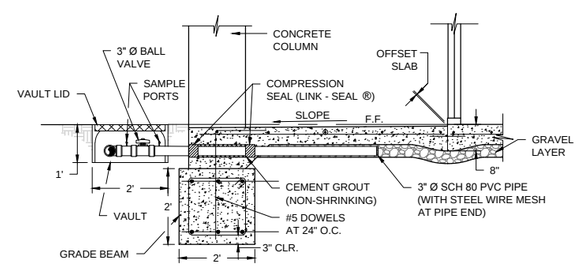

B / — SECTION
EXTRACTION POINT (N)
SCALE: 1" = 2'

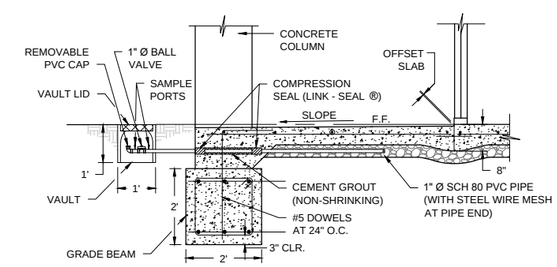

C / — SECTION
MONITORING POINT (E AND N)
SCALE: 1" = 2'

NOTES

1. TWO LINK-SEAL® EXPANDABLE RING SEALS SHALL BE INSTALLED AT EACH EP AND MP CORING. CONTRACTOR TO CONFIRM THE THICKNESS OF FOOTING AND TARGET LOCATION OF THE INNER SEAL WITH FIELD ENGINEER AT EACH LOCATION, WITH TARGET PLACEMENT INSET 16 INCHES FROM FACE OF SLAB WHERE POSSIBLE. OUTER SEAL SHALL NOT PROTRUDE BEYOND THE BUILDING EXTERIOR.
2. BETWEEN THE TWO RING SEALS, GROUT SEAL FOR ANNULAR VOID AROUND THE PVC PIPING SHALL BE CONFIRMED WITH FIELD ENGINEER, WITH A MINIMUM 13-INCH GROUT SEAL WITHIN THE CONCRETE SLAB WHERE POSSIBLE. SEAL SHALL BE BASF "CONSTRUCTION GROUT RC" NON-SHRINKING GROUT, CONTAINING NO PRIORITY POLLUTANT VOLATILE ORGANIC COMPOUNDS (VOCS), MIXED ACCORDING TO MANUFACTURER'S INSTRUCTIONS. CONTRACTOR SHALL RECOMMEND GROUT PLACEMENT METHOD FOR ENGINEER APPROVAL, WHICH SHALL CONSIDER AVOIDANCE OF VOID SPACES IN THE ANNULAR SEAL.
3. VAULT SHALL BE SIZED APPROXIMATELY 24-INCH SQUARE AND 12-INCH SQUARE AT EACH EP AND MP LOCATION, RESPECTIVELY, AND SHALL INCLUDE A WATER-TIGHT, LOCKABLE LID RATED FOR HEAVY PEDESTRIAN TRAFFIC. VAULT SHALL BE INSTALLED OUTSIDE THE FOUNDATION WALL, WITH FINISH HEIGHT ABOVE SURROUNDING GRADE BY APPROXIMATELY 1-INCH (LANDSCAPE AREAS) OR 1/4-INCH (FOOT-TRAFFIC AREAS), TO BE CONFIRMED WITH FIELD ENGINEER IN ALL CASES. ALL SHALL HAVE MINIMUM 2-INCH THICK ROUNDED DRAIN ROCK AS BOTTOM LAYER, WITH NO CONCRETE IN VAULT BOTTOM. CLEARANCE BETWEEN DRAIN ROCK AND PVC PIPING SHALL BE A MINIMUM OF 4 INCHES. VAULT APRON SHALL BE 4-INCH WIDE CONCRETE TO FULL DEPTH OF VAULT ON ALL SIDES.
4. PVC PIPE PENETRATIONS TO VAULTS SHALL INCLUDE 1/4 INCH THICK FOAM PIPE WRAP, OR EQUIVALENT WITH ENGINEER'S APPROVAL, TO PROTECT PIPE FROM VAULT SETTLING.
5. FOR FULL SCALE SYSTEM, EXISTING EXTRACTION AND MONITORING POINT NAMES AND NUMBERS HAVE BEEN REASSIGNED. PEP-1 AND PEP-3 ARE RENAMED AS MP-1 AND MP-3, RESPECTIVELY, AND ARE A 3-INCH SIZE. ALL OTHER MONITORING POINTS ARE 1-INCH, AND ALL EXTRACTION POINTS ARE 3-INCH.
6. REDUCTION TO 2" Ø SCH 80 APPLIES TO EP-3 AND EP-4. EXTRACTION PIPING SHALL EXPAND BACK UP TO 3" Ø PVC AS SOON AS PRACTICAL, A MINIMUM DISTANCE OF 15 X PIPE DIAMETER DOWNSTREAM OF THE METERING BOX.

0 1" 2"
ORIGINAL SCALE
SCALE IS BASED ON 22" X 34" NON-REDUCED SHEET SIZE (BORDER = 21" X 32")

REVISIONS

NO.	DESCRIPTION	DATE	BY

CLIENT:
SCHLUMBERGER TECHNOLOGY CORPORATION
105 INDUSTRIAL BOULEVARD
SUGARLAND, TEXAS 77478

ENGINEER:
Geosyntec consultants
1111 BROADWAY 6TH FLOOR
OAKLAND, CA 94607
PHONE: (510) 285-2759
FAX: (510) 836-3036

TYPICAL EXTRACTION AND MONITORING POINT DETAILS

SSD SYSTEM CONSTRUCTION DRAWINGS
369 / 379 NORTH WHISMAN ROAD
MOUNTAIN VIEW, CALIFORNIA 94043

DESIGN DRAWINGS

DES BY:	LK	DATE:	SEPTEMBER 2013
DRN BY:	MC, JA, MH	SCALE:	AS SHOWN
CHK BY:	LK	PROJECT:	WR1133A
REV BY:		DOCUMENT:	
APP BY:	SR		
FILE:	WR1133A-C-2.DWG		

DRAWING NO.
C-2

P:\PRJ2003REM\MEW Fairchild\06_Vapor Intrusion\369-399 Whisman & 468 Ellis\VI Dsgn\Design\Design Dwg\CADD\WR1133A-C-2.dwg Last Edited by: SKitakameyzer on 9/11/2013 4:47 PM

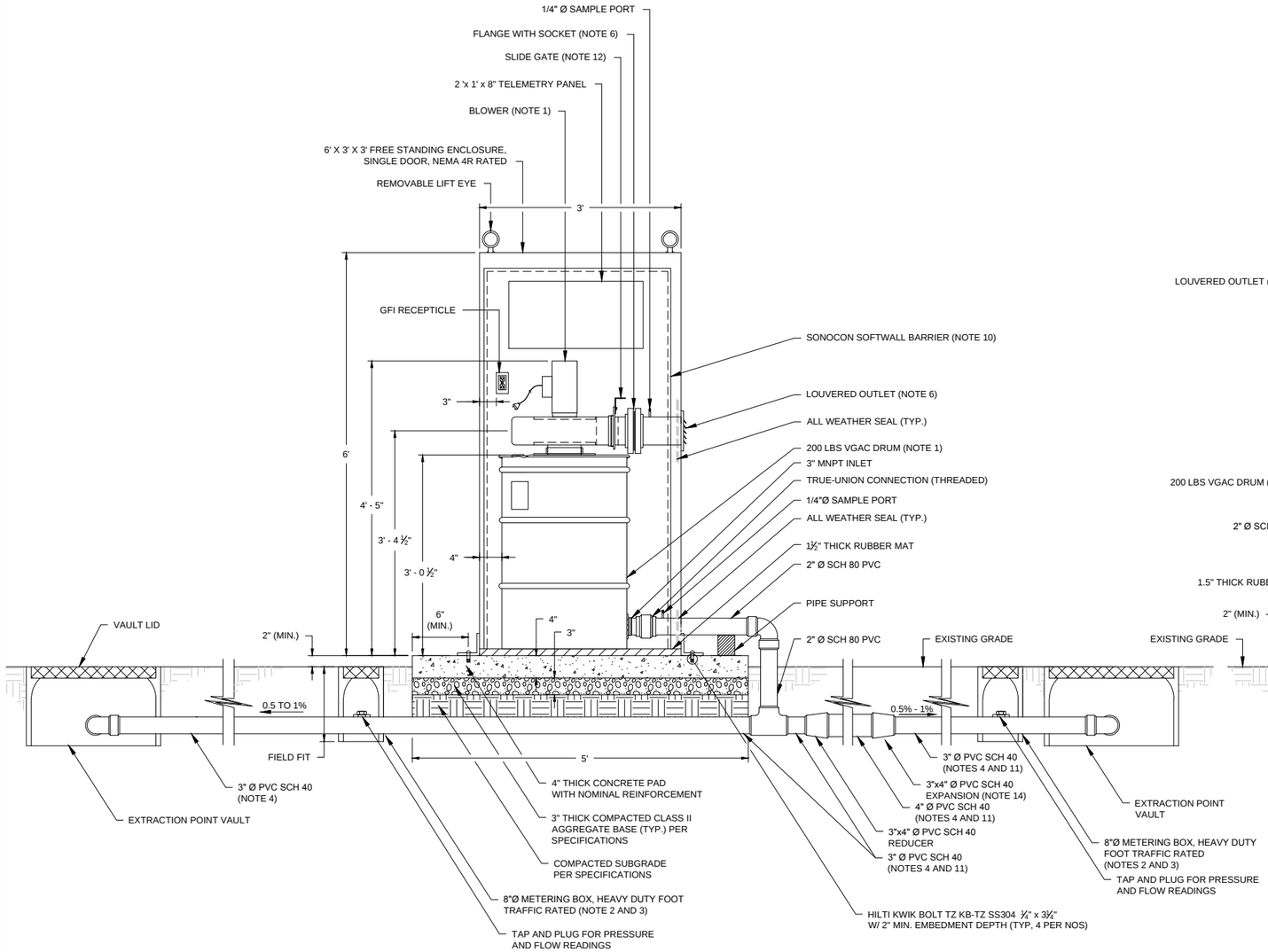

1 C-1 ELEVATION
TYPICAL EQUIPMENT ENCLOSURE
SCALE: 1" = 1'

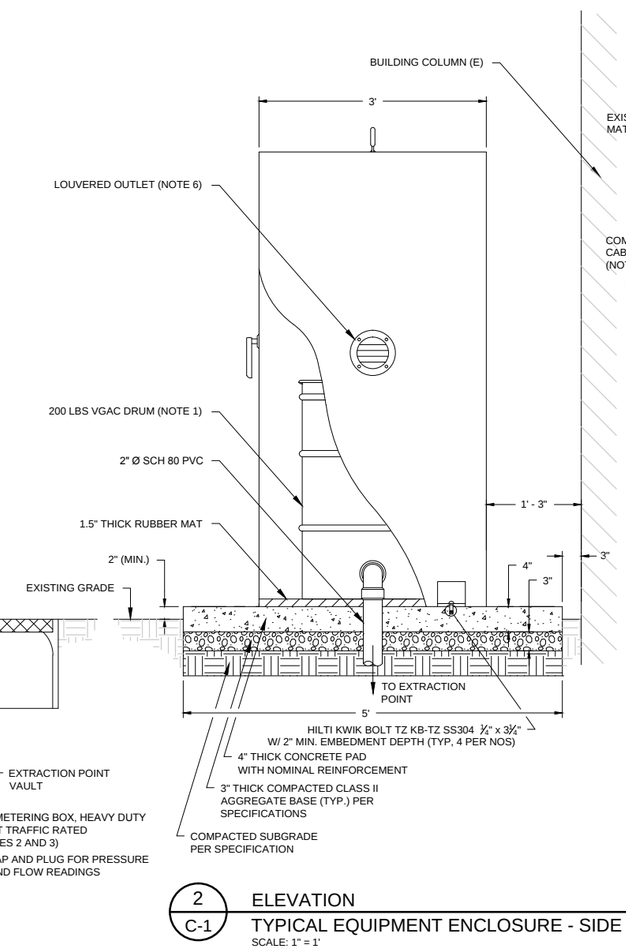

2 C-1 ELEVATION
TYPICAL EQUIPMENT ENCLOSURE - SIDE VIEW
SCALE: 1" = 1'

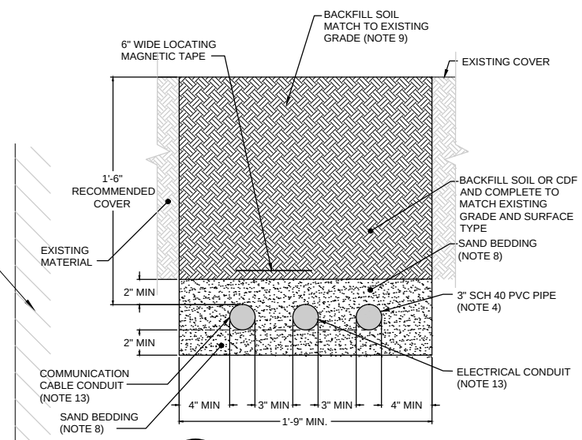

A SECTION
PIPE TRENCH,TYPICAL
SCALE: 1" = 0.5'

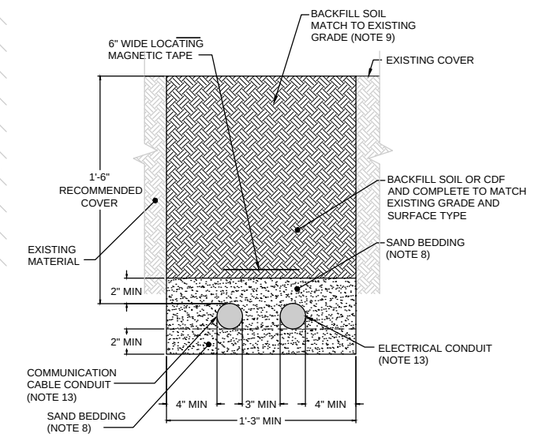

B SECTION
PIPE TRENCH,TYPICAL
SCALE: 1" = 0.5'

NOTES

1. VGAC DRUM AND BLOWER WILL BE SUPPLIED BY SIEMENS WATER TECHNOLOGIES CORP. VENT SCRUB ® 200 FAN PACKAGE, BELOW ARE THE DETAILS:

   BLOWER: CINCINNATI FAN
   MODEL # PB-10A (EP-side) AND # PB-14A (EP-center AND EP-side COMBINED)
   3/4 HP, 3450 RPM, 1PH, 60 HZ, 115/230 V
   100 SCFM @ 10.7 IWC AND 100 SCFM @12 IWC, RESPECTIVELY

   VGAC: SIEMENS WATER TECHNOLOGIES CORP.
   VENT SCRUB ®, 200 LB, 4mm PELLETS, 55-GALLON DRUM

2. METERING BOX SHALL BE PLACED A MINIMUM DISTANCE OF 15x PIPE DIAMETER UPSTREAM AND 10x PIPE DIAMETER DOWNSTREAM FROM NEAREST FLOW OBSTRUCTION / FITTING.

3. METERING BOX SHALL BE CHRISTY-TYPE OR ENGINEER-APPROVED EQUIVALENT, AND SHALL INCLUDE A WATER-TIGHT, TAMPER-RESISTANT, LID RATED FOR HEAVY PEDESTRIAN TRAFFIC. BOX SHALL BE INSTALLED WITH FINISH HEIGHT ABOVE SURROUNDING GRADE BY APPROXIMATELY 1-INCH (LANDSCAPE AREAS) OR 1/4-INCH (FOOT-TRAFFIC AREAS), TO BE CONFIRMED WITH FIELD ENGINEER IN ALL CASES. ALL SHALL HAVE MINIMUM 2-INCH THICK ROUNDED DRAIN ROCK AS BOTTOM LAYER, WITH NO CONCRETE IN BOX BOTTOM. BOX APRON SHALL BE 4-INCH WIDE CONCRETE TO FULL DEPTH OF BOX ON ALL SIDES.

4. PIPE SHALL HAVE CONTINUOUS 0.5% TO 1% SLOPE TOWARD EXTRACTION POINT. CONTRACTOR TO FIELD-FIT SLOPE AS NOTED. CONTRACTOR MAY, WITH ENGINEER'S APPROVAL, USE A MINIMAL LENGTH OF REINFORCED PVC HOSE TO ACCOMMODATE ALIGNMENT. PIPE SIZE VARIES FROM 2" TO 4"

5. PVC PIPE PENETRATIONS TO VAULTS AND METERING BOXES SHALL INCLUDE 1/4" THICK FOAM PIPE WRAP, OR EQUIVALENT WITH ENGINEER'S APPROVAL, TO PROTECT PIPE FROM VAULT OR METERING BOX SETTLING.

6. BLOWER OUTLET IS 5" OR 6"Ø FOR BLOWER MODEL PB-10A AND PB-14A, RESPECTIVELY. FINAL OUTLET PIPING SHALL CONSIST OF: 1) METAL FLANGE TO RUBBER FLANGE CONNECTION, 2) RUBBER FLANGE TO PVC FLANGE CONNECTION, 3) PVC SOCKET TO LOUVERED VENT CONNECTION. PVC AND VENT COMPONENTS SHALL BE SUPPORTED BY UNISTRUT OR ENGINEER-APPROVED EQUIVALENT TO SUPPORT OUTLET WHEN FLANGE IS UNCOUPLED FOR CARBON SERVICE.

7. CONTRACTOR TO EVALUATE AND PROPOSE CONNECTION TO EXISTING POWER ON SITE. ALL WORK IS TO BE PERFORMED BY A LICENSED ELECTRICAL CONTRACTOR. FOR FULL ELECTRICAL REQUIREMENTS, REFER TO GENERAL NOTES.

8. COMPACT SAND BEDDING(CALTRANS STANDARD SPECIFICATION 19-3.02E(2) FOR CULVERT SAND BEDDINGS) TO MINIMUM RELATIVE COMPACTION OF 90%.

9. BACKFILLED NATIVE OR IMPORTED SOIL, COMPACTED TO MINIMUM RELATIVE COMPACTION OF 90%.

10. EQUIPMENT ENCLOSURE SHALL HAVE SONOCON SOFTWALL ADSORPTIVE BARRIER ATTACHED WITH STICK PINS OR EQUIVALENT TO REDUCE THE BLOWER NOISE.

11. THE EP-2 AND EP-5 PIPE SHALL BE 4"Ø SCH 40 PVC AFTER METERING BOX.

12. SLIDE GATE DAMPER SHALL BE ORIENTED SIDEWAYS.

13. ELECTRICAL AND COMMUNICATION CABLE CONDUIT SHALL BE 2" SCH 40 PVC COMMUNICATION CABLES AND SHALL RUN FROM EE-1 TO EE-2, AND FROM EE-4 TO EE-3.

14. PIPE EXPANSION SHALL OCCUR AS SOON AS PRACTICAL, A MINIMUM DISTANCE OF 15 x PIPE DIAMETER DOWNSTREAM OF METERING BOX.

0 1" 2"
ORIGINAL SCALE

SCALE IS BASED ON 22" X 34" NON-REDUCED SHEET SIZE (BORDER = 21" X 32")

REVISIONS

NO.	DESCRIPTION	DATE	BY

CLIENT:
SCHLUMBERGER TECHNOLOGY CORPORATION
105 INDUSTRIAL BOULEVARD
SUGARLAND, TEXAS 77478

ENGINEER:
Geosyntec consultants
1111 BROADWAY 6TH FLOOR
OAKLAND, CA 94607
PHONE: (510) 285-2759
FAX: (510) 836-3036

TYPICAL EQUIPMENT ENCLOSURE

SSD SYSTEM CONSTRUCTION DRAWINGS
369 / 379 NORTH WHISMAN ROAD
MOUNTAIN VIEW, CALIFORNIA 94043

DESIGN DRAWINGS

DES BY:	LK	DATE:	SEPTEMBER 2013
DRN BY:	MC, JA, MH	SCALE:	1" = 1'
CHK BY:	LK	PROJECT:	WR1133A
REV BY:		DOCUMENT:	
APP BY:	SR		
FILE:	WR1133A-C-3.DWG		

DRAWING NO.
C-3

P:\PRJ2003\REM\MEW Fairchild\06_Vapor Intrusion\369-399 Whisman & 469 Ellis\VI Dsgn\Design\Design Dwg\CADD\WR1133A-C-3.dwg Last Edited by: SKhalameyzer on 9/18/2013 10:40 AM

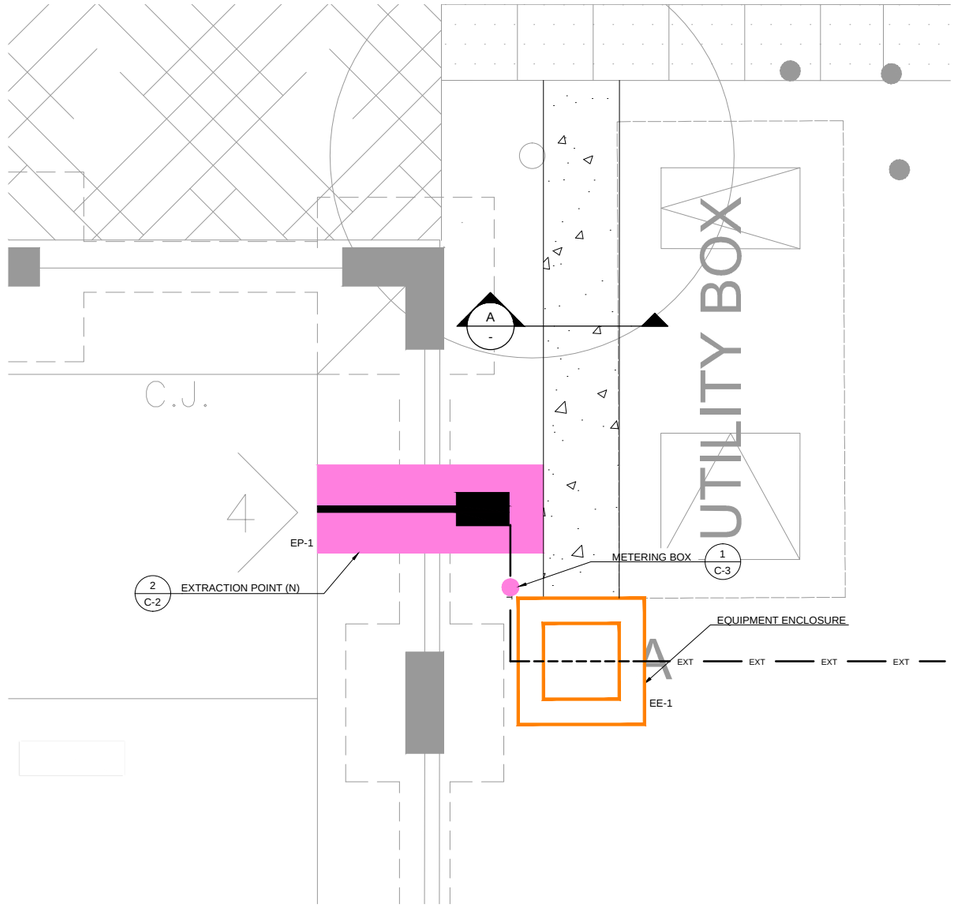

1 C-1 PLAN
EE-1 LAYOUT
SCALE: 1" = 3'

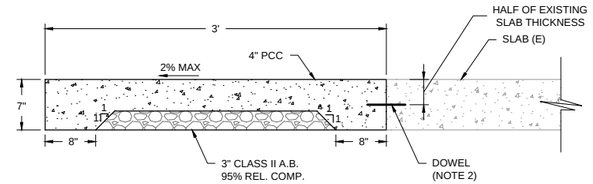

A C-1 SECTION
NEW ACCESS WALKWAY
SCALE: 1" = 1'

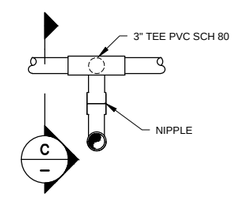

B C-2 PLAN
WYE STRAINER (NOTE 3)
SCALE: 1" = 1'

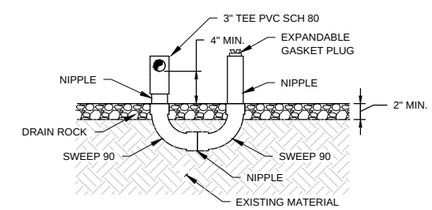

C - SECTION
WYE STRAINER
SCALE: 1" = 1'

NOTES

1. THE NEW WALKWAY SHALL BE POURED TO MATCH EXISTING UTILITY PAD. THE WIDTH OF WALKWAY SHALL BE 3 FEET.
2. THE NEW WALKWAY SHALL BE DOWELED INTO THE EXISTING UTILITY PAD. DOWELS SHALL BE 7" LONG, #4 DOWELS, SET 24" O.C. WITH MINIMUM 3" EMBEDMENT EACH IN NEW AND EXISTING CONCRETE. DRILL HOLES, BLOW CLEAR, AND SET DOWELS IN EPOXY.
3. WYE STRAINER SHALL BE INSTALLED IN PIPELINE FOR EACH EXTRACTION POINT TO COLLECT MOISTURE ACCUMULATION. PLACEMENT OF WYE STRAINER WILL BE IN EP VAULTS WITH FINAL ORIENTATION DETERMINED IN FIELD BY ENGINEER IN CONSULTATION WITH CONTRACTOR.

0 1" 2"
ORIGINAL SCALE
SCALE IS BASED ON 22" X 34" NON-REDUCED SHEET SIZE (BORDER = 21" X 32")

REVISIONS

NO.	DESCRIPTION	DATE	BY

CLIENT:
SCHLUMBERGER TECHNOLOGY CORPORATION
105 INDUSTRIAL BOULEVARD
SUGARLAND, TEXAS 77478

ENGINEER:
Geosyntec consultants
1111 BROADWAY 6TH FLOOR
OAKLAND, CA 94607
PHONE: (510) 285-2759
FAX: (510) 836-3036

CONSTRUCTION DETAILS 1

SSD SYSTEM CONSTRUCTION DRAWINGS
369 / 379 NORTH WHISMAN ROAD
MOUNTAIN VIEW, CALIFORNIA 94043

DESIGN DRAWINGS

DES BY:	LK	DATE:	SEPTEMBER 2013
DRN BY:	MC, JA, MH	SCALE:	AS SHOWN
CHK BY:	LK	PROJECT:	WR1133A
REV BY:		DOCUMENT:	
APP BY:	SR		
FILE:	WR1133A-C-4.DWG		

DRAWING NO.
C-4

P:\PRJ2003\REM\MEW Fairchild\06_Vapor Intrusion\369-399 Whisman & 468 Ellis\VI Dsgn\Design\Design Dwg\CADD\WR1133A-C-4.dwg Last Edited by: Michael on 8/28/2013 3:48 PM

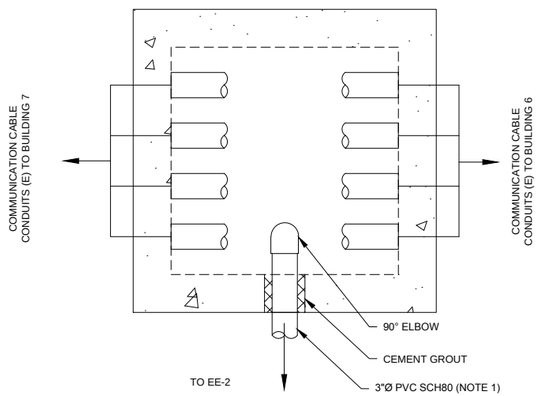

1 / C-1

1 / C-1 UTILITY VAULT (E)

NOT TO SCALE, NOTE 2

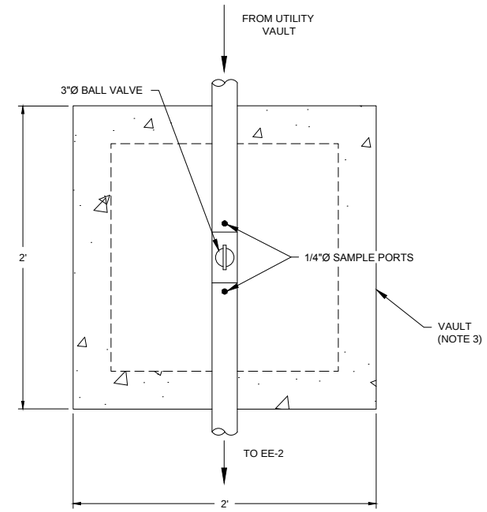

2 / C-1 PLAN
MONITORING VAULT (N)

NOT TO SCALE

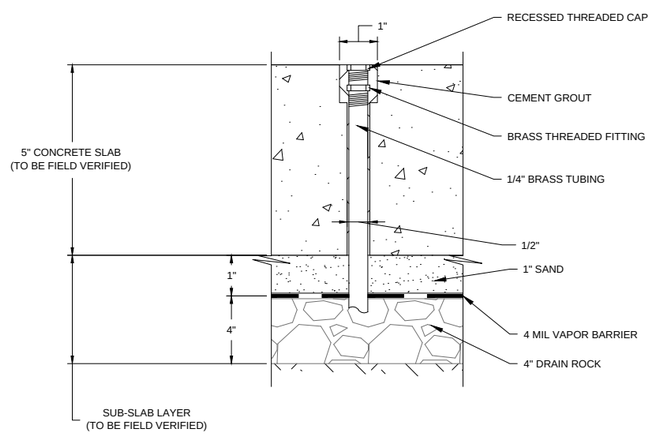

3 / C-1 TEMPORARY PRESSURE MONITORING POINT

NOT TO SCALE

NOTES:

1. CONTRACTOR SHALL HAND DIG TO EXPOSE SOUTHERN WALL OF EXISTING UTILITY VAULT. CONTRACTOR SHALL CORE THROUGH VAULT SIDEWALL TO INSTALL NEW VENT PIPING. VENT PIPE SHALL HAVE 90° ELBOW FACING DOWN WITH LOUVRE CAP.
2. DIMENSION OF EXISTING UTILITY VAULT TO BE VERIFIED IN THE FIELD.
3. VAULT SHALL BE SIZED APPROXIMATELY 24" SQUARE AND SHALL INCLUDE A WATER-TIGHT, LOCKABLE LID RATED FOR HEAVY PEDESTRIAN TRAFFIC. VAULT SHALL BE INSTALLED WITH FINISH HEIGHT ABOVE SURROUNDING GRADE BY APPROXIMATELY 1/4", TO BE CONFIRMED WITH FIELD ENGINEER. ALL SHALL HAVE MINIMUM 2-INCH THICK ROUNDED DRAIN ROCK AS BOTTOM LAYER, WITH NO CONCRETE IN VAULT BOTTOM. CLEARANCE BETWEEN DRAIN ROCK AND PVC PIPING SHALL BE A MINIMUM OF 4-INCHES. VAULT APRON SHALL BE 4-INCH WIDE CONCRETE TO FULL DEPTH OF BOX ON ALL SIDES.

0 1" 2"
ORIGINAL SCALE

SCALE IS BASED ON 22" X 34" NON-REDUCED
SHEET SIZE (BORDER = 21" X 32")

REVISIONS

NO.	DESCRIPTION	DATE	BY

CLIENT:

SCHLUMBERGER TECHNOLOGY CORPORATION
105 INDUSTRIAL BOULEVARD
SUGARLAND, TEXAS 77478

ENGINEER:

Geosyntec consultants

1111 BROADWAY 6TH FLOOR
OAKLAND, CA 94607

PHONE: (510) 285-2759
FAX: (510) 836-3036

CONSTRUCTION DETAILS 2

SSD SYSTEM CONSTRUCTION DRAWINGS
369 / 379 NORTH WHISMAN ROAD
MOUNTAIN VIEW, CALIFORNIA 94043

DESIGN DRAWINGS

DES BY:	LK	DATE:	SEPTEMBER 2013
DRN BY:	MC, JA, MH	SCALE:	1" = 1'
CHK BY:	LK	PROJECT:	WR1133A
REV BY:			
APP BY:	SR	DOCUMENT:	
FILE:	WR1133A-C-5.DWG		

DRAWING NO.

C-5

P:\PR\2003REM\MEW Fairchild\06_Vapor Intrusion\369-399 Whisman & 468 Ellis\VI Dsgn\Design\Design Dwg\CADD\WR1133A-C-5.dwg Last Edited by: Mchael on 9/30/2013 3:42 PM

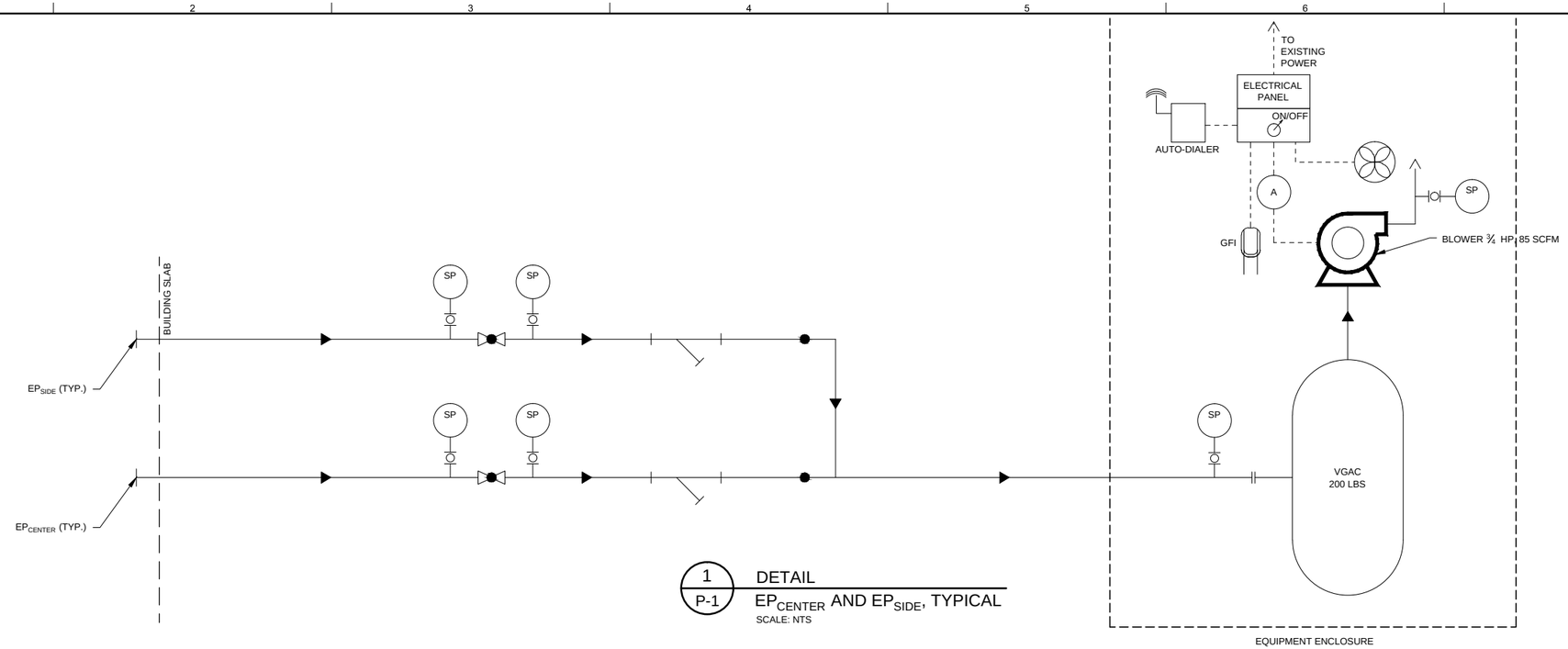

1 / P-1 DETAIL
EP$_{CENTER}$ AND EP$_{SIDE}$, TYPICAL
SCALE: NTS

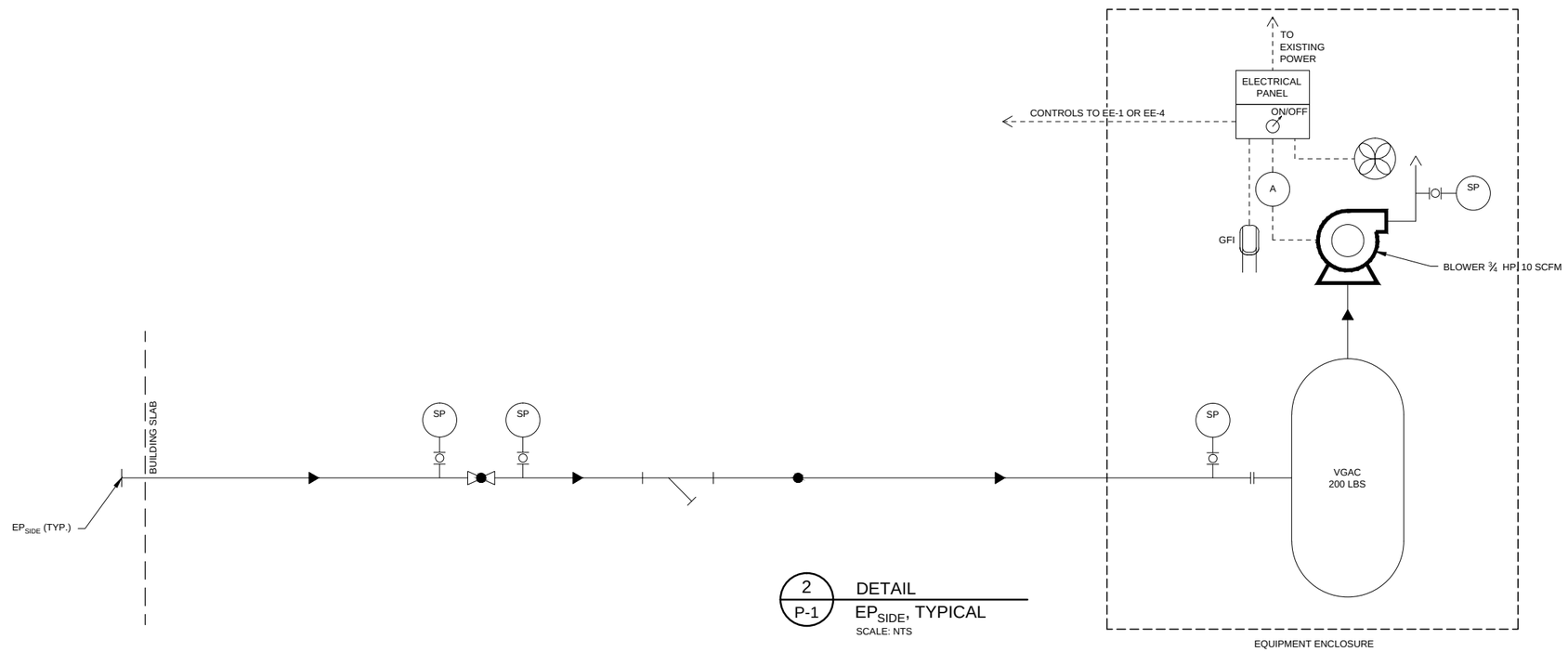

2 / P-1 DETAIL
EP$_{SIDE}$, TYPICAL
SCALE: NTS

LEGEND

- BALL VALVE
- BLOWER
- GROUND FAULT INTERRUPTER
- PIPE (ARROW FLOW DIRECTION)
- AMPERE GAUGE
- SAMPLE PORT
- SAMPLE VALVE
- WYE STRAINER
- TAP WITH PLUG
- VAPOR-PHASE GRANULAR ACTIVATED CARBON VESSEL
- VENT
- TRUE UNION
- ANTENNA
- EXHAUST FAN

0 1" 2"
ORIGINAL SCALE
SCALE IS BASED ON 22" X 34" NON-REDUCED SHEET SIZE (BORDER = 21" X 32")

REVISIONS

NO.	DESCRIPTION	DATE	BY

CLIENT:
SCHLUMBERGER TECHNOLOGY CORPORATION
105 INDUSTRIAL BOULEVARD
SUGARLAND, TEXAS 77478

ENGINEER:
Geosyntec consultants
1111 BROADWAY 6TH FLOOR
OAKLAND, CA 94607
PHONE: (510) 285-2759
FAX: (510) 836-3036

PROCESS AND INSTRUMENTATION DIAGRAM

SSD SYSTEM CONSTRUCTION DRAWINGS
369 / 379 NORTH WHISMAN ROAD
MOUNTAIN VIEW, CALIFORNIA 94043

DESIGN DRAWINGS

DES BY:	LK	DATE:	SEPTEMBER 2013
DRN BY:	MC, JA, MH	SCALE:	AS SHOWN
CHK BY:	LK	PROJECT:	WR1133A
REV BY:		DOCUMENT:	
APP BY:	SR		
FILE:	WR1133A-P-1.DWG		

DRAWING NO.
P-1

P:\PR\2003\REM\MEV Fairchild\06_Vapor Intrusion\369-399 Whisman & 468 Ellis\VI Dsgn\Design\Design Dwg\CADD\WR1133A-P-1.dwg Last Edited by: SKhalamayzer on 9/11/2013 5:51 PM

APPENDIX B
Product Data for SSD System Components

SIEMENS INDUSTRY

Rev. 2 – 3/6/12

Vent-Scrub® 200TEFC Fan Package
Vapor Phase Adsorber with Integrated Fan

Installation and Start-Up Instructions

IMPORTANT: Read all instructions prior to start-up

WARNING

The adsorption of organic compounds onto activated carbon generates heat. In rare instances, adsorbed compounds may also react on the carbon surface to generate additional heat. If these heat sources are not properly dissipated, the carbon bed temperature may rise to the point where the carbon can ignite, leading to a fire or other hazardous condition. Please see Appendix A of this document for a description of industry-accepted engineering practices to assure the dissipation of heat and safe operation of the carbon bed. In certain applications where the risk of ignition is significant, activated carbon may not be a recommended treatment technology. Please contact your Technical Sales Representative for more details.

The Siemens Vent-Scrub® 200TEFC system has been designed for easy and rapid installation. Final installation requires the connection of the unit to the process outlet through the use of ducts, or flexible hoses. The following instructions must be followed prior to system start-up:

1. The Vent-Scrub® 200TEFC will ship to the site as a completely assembled unit, with the fan and motor assembly attached to the drop of the adsorber.
2. Place the Vent-Scrub® 200TEFC in an area close to the contaminated air source and accessible to maintenance personnel. The Vent-Scrub® 200TEFC is self-supporting and therefore requires no special stand or support pad. The area chosen for locating the Vent-Scrub® 200TEFC should be level, flat and capable of supporting its weight.
3. Remove the protective shipping plug from the inlet connection (lower sidewall of adsorber) and save for future storage and shipping.
4. Connect a duct or flexible hose to the inlet of the Vent-Scrub® adsorber.
5. Connect a duct or flexible hose to the outlet connection on the fan discharge, if required.

All information presented herein is believed reliable and in accordance with accepted engineering practices. Siemens makes no warranties as to completeness of information. Users are responsible for evaluating individual product suitability for specific applications. Siemens assumes no liability whatsoever for any special, indirect or consequential damages arising from the sale, resale or misuse of its products.

Siemens reserves the right to change the specifications referred to in this literature at any time, without prior notice.

Siemens Industry, Inc.
Water Technologies Business Unit

Tel: 866.613.5620
www.siemens.com/es

6. Close the damper on the discharge side of the fan to full closed position, then open slightly. Damper should be slightly open when the unit is started up.
7. Connect the power cord to a power supply source (note: the unit ships with a power cord that terminates in a bare end. It will need to be wired to a proper power supply).
8. Once power is connected, the unit can be started via the power switch on the fan assembly.
9. Once started, utilize the discharge damper to regulate flow. Refer to the fan curve in Appendix B to assist in setting the desired flow rate.
10. Please note we do not recommend the use of this product for adsorption of ketones. Contact your Technical Sales Representative for alternative treatment system recommendations.
11. When using Siemens **Midas® OCM** carbon, the inlet air stream must contain at least 50% relative humidity and contain no free water (liquid).
12. Once operational, the Vent-Scrub® Series will continue to remove contaminants with little or no maintenance, until the carbon is spent. Refer to the fan manual (in Appendix B) for additional details on maintenance of the fan.

NOTE: Studies conducted have shown that low oxygen content exists in adsorbers containing wet carbon. Laboratory experiments conducted since that time also have revealed that commercial activated carbons in a wet or moist condition will lower the oxygen content of an isolated space.

All information presented herein is believed reliable and in accordance with accepted engineering practices. Siemens makes no warranties as to completeness of information. Users are responsible for evaluating individual product suitability for specific applications. Siemens assumes no liability whatsoever for any special, indirect or consequential damages arising from the sale, resale or misuse of its products.

Siemens reserves the right to change the specifications referred to in this literature at any time, without prior notice.

Vent-Scrub® 200TEFC

GAC ADSORPTION SYSTEM SPECIFICATION SUMMARY

The **Vent-Scrub® 200TEFC** Vapor Phase Adsorption Filter is designed to treat a wide range of contaminated process streams, with economical carbon usage and ease of handling. This adsorber is capable of a maximum flow rate of 100 cfm, and has an integrated fan/motor package attached to the top lid of the adsorber.

FILTER DATA:

Vessel Dimensions	25” dia x 35” high
Maximum Working Pressure	3 psig
Vessel Volume	7.4 Ft^3
Carbon Capacity	200 lbs.
Carbon Bed Volume-Typical (29.5 lb/cu-ft)	6.8 Ft^3
Maximum Flow	100 cfm
Material	Carbon Steel
Maximum Operating Temperature	140°F
Interior Surface Coating	Epoxy
Exterior Surface Coating	Enamel
Standard Color	Blue
Inlet / Outlet Connections	2” MNPT / 5” (damper outlet)
Underdrain	2” x 18” PVC Slotted Pipe

FAN DATA:

Fan Housing	Cast Aluminum
Shaft Seal	Teflon
Blower Specification	Arrangement 4HM, 6” Inlet, CW Rotation, BH Discharge
Blower Performance	100 cfm @10.7” w.c.
Motor:	¾ HP, 3450 RPM, 1 PH, 60Hz, 115/208-230V
Electricals	Start/Stop Switch, 8’ power cord (115 VAC)
Flow Control	Slide Gate Damper (5” outlet)

WEIGHT:

Shipping	330 lbs.
Operating	330 lbs.

All information presented herein is believed reliable and in accordance with accepted engineering practices. Siemens makes no warranties as to completeness of information. Users are responsible for evaluating individual product suitability for specific applications. Siemens assumes no liability whatsoever for any special, indirect or consequential damages arising from the sale, resale or misuse of its products.

Siemens reserves the right to change the specifications referred to in this literature at any time, without prior notice.

Westates® coconut shell based granular activated carbon - VOCarb® 36C

For Gas Phase Adsorption Applications

Description

VOCarb® 36C is a high activity, granular activated carbon that is manufactured from selected grades of coconut shell. The granular shape of this carbon maximizes its geometric surface area, significantly increasing surface and pore diffusion rates and thereby increasing it's effectiveness for the adsorption of VOCs with a short contact time. The very high surface area and predominately microporous pore size distribution further enhance the effectiveness of this coconut shell based carbon. In addition, VOCarb® carbons also have a high retentivity to hold onto and prevent desorption of previously adsorbed organic compounds. The granular shape of VOCarb® 36C results in excellent gas contacting but still allows the carbon bed to operate at pressure drops similar to 4mm pelletized carbons. The high density and superior hardness of VOCarb® 36C activated carbon provides excellent resistance to dust and fines formation.

Applications

Cost effective VOCarb® activated carbons developed by Siemens have been demonstrated to provide superior performance in an extensive array of gas phase treatment applications. VOCarb® activated carbons are available for:

- Chemical process applications
- VOC control from air strippers, soil vapor extraction and air sparge systems
- Control of tank vent emissions
- HVAC
- Odor control
- Solvent recovery of low boiling point solvents
- Use as a catalyst/catalyst support

Quality Control

All VOCarb® activated carbons are extensively quality checked at our State of California certified environmental and carbon testing laboratory located in Los Angeles, CA. Siemens' laboratory is fully equipped to provide complete quality control analyses using ASTM standard test methods in order to assure the consistent quality of all Westates® carbons.

Our technical staff offers hands-on guidance in selecting the most appropriate system, operating conditions and carbon to meet your needs. For more information, contact your nearest Siemens representative.

Features and Benefits

- Exceptionally high VOC adsorption capacity
- Excellent VOC retentivity characteristics, works well for the adsorption of small molecules
- Superior hardness minimizes attrition losses during handling, use and service
- Cost effective
- Easily reactivated for recycle and reuse
- Low pressure drop characteristics (similar to 4mm pelletized carbons)
- Backed by technical support and a strong QA/QC program

Typical Properties	
Parameter	**VOCarb® 36C**
Carbon Type	Coconut Shell
Mesh Size, U.S. Sieve	3 x 6
Butane Activity (1)	23.5
Hardness No., Wt. %	98
Moisture Content, Wt. %	3
Apparent Density, g/cc	0.45 - 0.51
CTC Activity (1)	60

1)Butane activity (D5742) has been adopted by ASTM as a replacement for CTC activity (D3467) as a test method for estimating the micropore volume of an activated carbon.

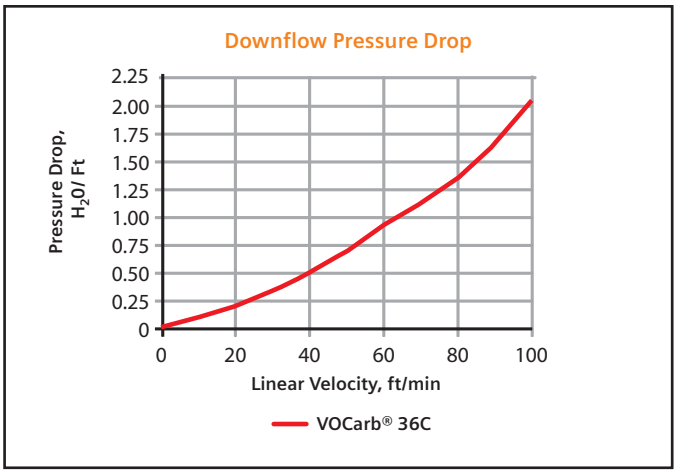

Warning

The adsorption of organic compounds onto activated carbon generates heat. In rare instances, adsorbed compounds may also react on the carbon surface to generate additional heat. If these heat sources are not properly dissipated, the carbon bed temperature may rise to the point where the carbon can ignite, leading to a fire or other hazardous condition. A description of industry-accepted engineering practices to assure the dissipation of heat and safe operation of the carbon bed can be provided upon request. In certain applications where the risk of ignition is significant, activated carbon may not be a recommended treatment technology. Please contact your Technical Sales Representative for more details.

Wet activated carbon readily adsorbs atmospheric oxygen. Dangerously low oxygen levels may exist in closed vessels or poorly ventilated storage areas. Workers should follow all applicable state and federal safety guidelines for entering oxygen depleted areas.

All information presented herein is believed reliable and in accordance with accepted engineering practices. Siemens makes no warranties as to the completeness of this information. Users are responsible for evaluating individual product suitability for specific applications. Siemens assumes no liability whatsoever for any special, indirect or consequential damages arising from the sale, resale or misuse of its products.

Siemens
Water Technologies
2430 Rose Place
Roseville, MN 55113
800.525.0658 phone

© 2008 Siemens Water Technologies Corp.
WS-VO36Cdr-DS-0608
Subject to change without prior notice.

VoCarb and Westates are trademarks of Siemens, its subsidiaries or affiliates.

The information provided in this literature contains merely general descriptions or characteristics of performance which in actual case of use do not always apply as described or which may change as a result of further development of the products. An obligation to provide the respective characteristics shall only exist if expressly agreed in the terms of the contract.

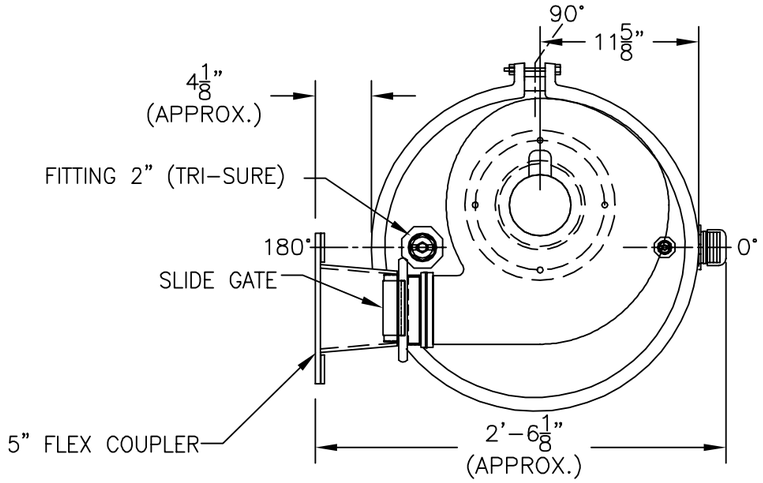

PLAN
PB-10A

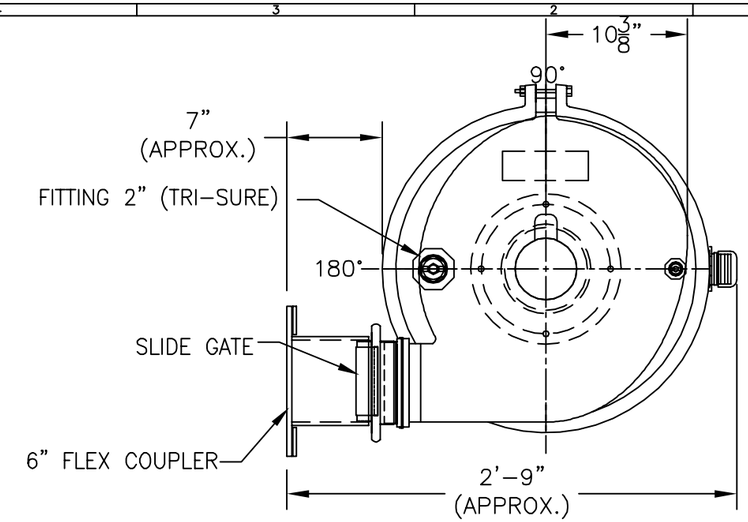

PLAN
PB-14A

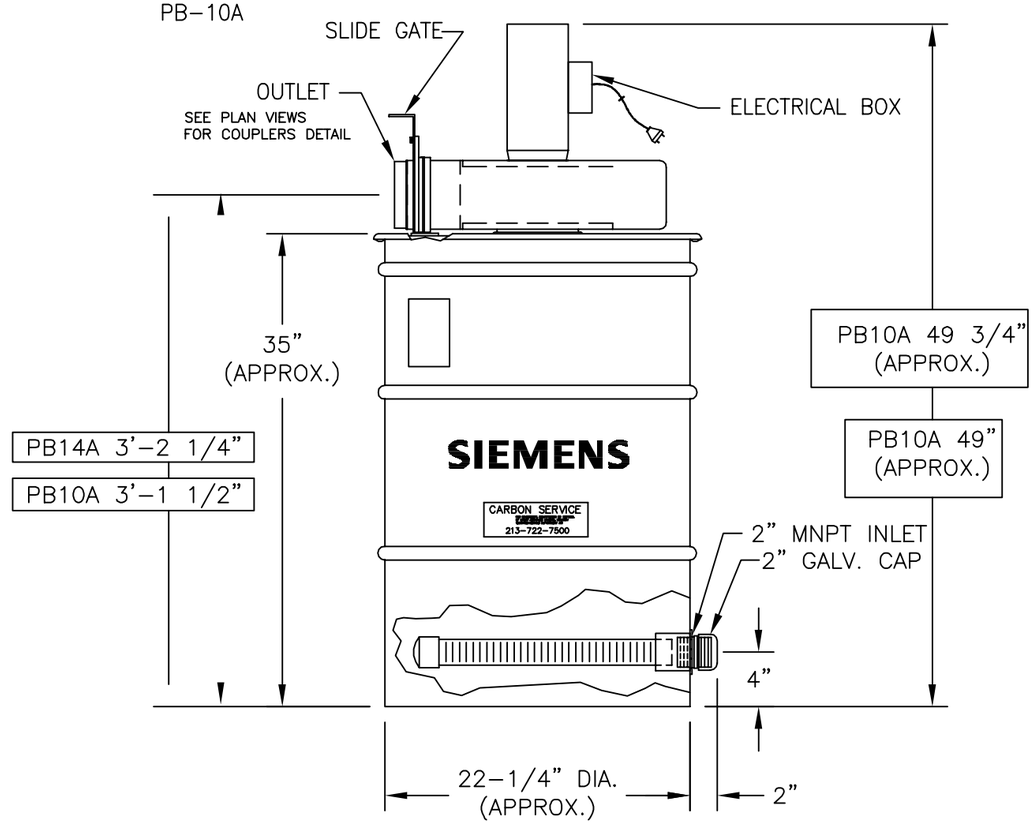

ELEVATION

NOTES:

1. CARBON:
   VC36C VAPOR PHASE GAC.
2. MATERIALS OF CONSTRUCTION:
   VESSEL: .....55 GAL. CARBON STEEL
   EXTERNAL COATING ..... BLUE ENAMEL
   INTERNAL COATING: ..... EPOXY
   INTERNAL DISTRIBUTION: ..... PVC
3. SPECIFICATIONS:

	PB-10A	P-B14A
FLOW * - SCFM (MAX):	3	
PRESSURE - PSIG (MAX):		
TEMPERATURE - DEG F (MAX):	100	100
CARBON FILL VOLUME - CU FT:		3
CROSS SECTION - SQ FT:	140	140
SHIPPING WEIGHT - LBS: (APPROX,)	6.8	6.8
OPERATING WEIGHT - LBS: (APPROX,)	2.8	2.8
	330	330
	330	330

4. BLOWER:
   (4) PB-10A: 10.7 In. WG, MOTOR 3/4 HP, 3450 RPM, 1PH, 60Hz, 110 VAC, 9.8 AMPS.
   5" OD. OUTLET, 8' LONG POWER CORD SET AS STANDARD,
   FLEX COUPLER FERNCO PART#1060-44 4" DIA. (STRETCH TO FIT OUTLET OD.) X 4" LONG

   (6) PB-14A 12.0 In. WG, MOTOR 3/4 HP, 3500 RPM, 1PH, 60Hz, 110 VAC, 9.8 AMPS.
   6" OD. OUTLET, 8' LONG POWER CORD SET AS STANDARD.
   FLEX COUPLER FERNCO PART#1055-55 6" X 5.86 DIA. (STRETCH TO FIT OUTLET OD.) X 5" LONG

5. ACTUAL DESIGN SHOULD BE BASED ON SUPERFICIAL BED VELOCITY (SBV) AS REQUIRED FOR SPECIFIC CONTAMINANTS.
6. ALL DIMENSIONS ARE ±1".

REV	DESCRIPTION	DATE	DWN	CHKD	APVD	ECN
2	ADDED SLIDE GATE TO TOP VIEWS	10-2-13	CAR			
1	REMOVED COVER AT OUTLET, ADDED FLEX COUPLERS	9-25-13	CAR			

COMPANY CONFIDENTIAL
THIS DOCUMENT AND ALL INFORMATION CONTAINED HEREIN ARE THE PROPERTY OF SIEMENS AND/OR ITS AFFILIATES. THE DESIGN CONCEPTS AND INFORMATION CONTAINED HEREIN ARE PROPRIETARY TO SIEMENS AND ARE SUBMITTED IN CONFIDENCE. THEY ARE NOT TRANSFERABLE AND MUST BE USED ONLY FOR THE PURPOSE FOR WHICH THIS DOCUMENT IS SUBMITTED. THIS DOCUMENT IS NOT TO BE DISCLOSED, REPRODUCED, LOANED OR USED IN ANY OTHER MANNER WITHOUT THE EXPRESS WRITTEN CONSENT OF SIEMENS. IN NO EVENT SHALL THEY BE USED IN ANY MANNER DETRIMENTAL TO THE INTEREST OF SIEMENS. ALL PATENT RIGHTS ARE RESERVED. UPON THE DEMAND OF SIEMENS, THIS DOCUMENT, ALONG WITH ALL COPIES AND EXTRACTS, AND ALL RELATED NOTES AND ANALYSES, MUST BE RETURNED TO SIEMENS OR DESTROYED, AS INSTRUCTED BY SIEMENS. ACCEPTANCE OF THE DELIVERY OF THIS DOCUMENT CONSTITUTES AGREEMENT TO THESE TERMS AND CONDITIONS.

	DATE
DESIGNER CAR	9-9-13
CHECKER	
ENGINEER	
MANAGER	
FILE:	
SCALE: NA	

TITLE
VSC200TEFC
ADSORBER 200SCA W/ BLOWER TEFC MOTOR

CLIENT
GEOSYNTEC CONSULTANTS

SIEMENS Water Technologies
RED BLUFF, CA
530-527-2664

PROJECT	CODE	DRAWING	SHEET	REV
		200-STD	SH1 OF SH1	2

STD: 0302-24X36D1 | INTL REF: INTR_REF_NO | BAR = 1" AT PLOT SCALE

APPENDIX A:
Recommendations to Avoid Thermal Excursions in Activated Carbon Canisters

All information presented herein is believed reliable and in accordance with accepted engineering practices. Siemens makes no warranties as to completeness of information. Users are responsible for evaluating individual product suitability for specific applications. Siemens assumes no liability whatsoever for any special, indirect or consequential damages arising from the sale, resale or misuse of its products.

Siemens reserves the right to change the specifications referred to in this literature at any time, without prior notice.

Recommendations to Avoid Thermal Excursions in Activated Carbon Adsorbers

What leads to a thermal excursion? When the organic compounds in the vapor phase are adsorbed onto the surface of activated carbon, heat associated with this adsorption process is released. This liberated heat is referred to as the "heat of adsorption." The heat of adsorption is directly proportional to the organic concentrations being adsorbed on the carbon. The higher the concentration, the greater will be the heat of adsorption. A thermal excursion can occur when heat is generated in a carbon bed at a rate that is faster than the rate at which the heat can be transferred out of the carbon bed. As the temperature increases, the oxidation initiation temperatures of the organic compounds that are adsorbed on the carbon surface are exceeded and their rapid oxidation begins to take place. This rapid oxidation can lead to a further rise in the temperature of the carbon bed until the ignition temperature of the activated carbon itself is reached. This phenomenon generally occurs in situations where the organic concentrations are high (>5000 ppmv) and the flow rates are low (<25 fpm) and intermittent.

Another factor that can lead to a thermal excursion can be attributed to the heat of reaction resulting when one compound reacts with itself or with another or from the heat of decomposition when a compound decomposes on the carbon surface. These processes, chemical reaction and decomposition, can lead to a significant temperature rise within the carbon bed if the heat is not transferred out of the carbon fast enough. Ketones are typical of compounds that are highly reactive when adsorbed on a carbon surface with enough heat being generated to lead to a bed fire. Operating at low flow with high concentrations of ketones is not recommended.

The following industry-accepted practices are commonly employed for high VOC concentrations and intermittent low flow situations (**note that the exact control and mitigation strategy is the responsibility of the client**):

1. Prior to putting the carbon adsorber into service, add water to the adsorber until the moisture content of the carbon bed is approximately 20-25 wt. %. Add the designated gallons of water to the corresponding Vent-Scrub®, FB Series, and RB Series Vapor Phase Adsorbers:

Vent-Scrub® 200:	6 gallons	FB1000	30 gallons	RB5 :	150 gallons
Vent-Scrub® 400:	12 gallons	FB2000	60 gallons	RB10 :	300 gallons
Vent-Scrub® 1000:	30 gallons	FB3000	90 gallons	RB12HV:	360 gallons
Vent-Scrub® 2000:	60 gallons			RB20:	600 gallons
Vent-Scrub® 3000:	90 gallons				
Vent-Scrub® 8000:	240 gallons				

   Remove the top manway(s) and evenly distribute the water across the top of the carbon bed. This process should reduce the temperature rise resulting from the heat of adsorption and assist in keeping the carbon adsorber cool. Siemens does not recommend soaking of the entire carbon bed with water because this will reduce the capacity of the carbon for adsorbing VOC's and greatly increase carbon usage. We recommend adding only enough water to have the moisture content at 20-25 wt. %. Water can be added through the top manway. **Note that addition of water is not normally recommended for Midas® OCM activated carbon.** The auto ignition temperature for Midas® OCM is approximately 1000°F. This is higher than any other odor control activated carbon on the market and makes Midas® OCM less susceptible to hot spot formation and bed fires and therefore is safer to use in most applications.

All information presented herein is believed reliable and in accordance with accepted engineering practices. Siemens makes no warranties as to completeness of information. Users are responsible for evaluating individual product suitability for specific applications. Siemens assumes no liability whatsoever for any special, indirect or consequential damages arising from the sale, resale or misuse of its products.

Siemens reserves the right to change the specifications referred to in this literature at any time, without prior notice.

2. Thermal excursions can be avoided and bed hot spots can be detected at a very early stage when they are more easily controlled by monitoring the effluent gas from the carbon adsorber for the presence of carbon monoxide (CO) with a CO monitor (assuming CO is not present in the inlet). If the CO concentration exceeds 1500 ppmv, then steps should be taken. Refer to Number 10 below.

3. Install a flame arrestor between the carbon adsorber and the vapor source located within 10 pipe diameters of the inlet of the carbon adsorber.

4. Install a fusible link with suitable melting point at the inlet of the vapor phase carbon adsorber. A fusible link alone may not prevent a flashback. The "hot spot" can act as an ignition source yet not transfer enough heat to the vapor to melt the fusible link. The combination of the fusible link with a flame arrestor should be adequate to prevent a flashback provided the flame arrestor stops the propagation of the flame.

5. Install a check valve after the carbon adsorber. This prevents air from being drawn back through the carbon adsorber when the source tank is being pumped down. If the carbon adsorber is already hot, the additional air will provide oxygen needed to sustain combustion.

6. Operate at less than 25% of the LEL (lower explosive limit). Lowering of the VOC concentration to below this level can be accomplished by adding dilution air or nitrogen to the vapor stream.

7. Verify the carbon adsorber has been electrically grounded.

8. If the carbon adsorber was used previously at another unit, feel the entire length of the carbon adsorber for signs the bed may be overheating and for the possible presence of “hot” spots (**WARNING: use caution as the adsorber vessel may be hot enough to cause burns**). This is only a preliminary check for problems. “Hot” spots in the carbon bed away from the sides cannot be detected by feeling to see if the carbon adsorber is warm to the touch. Thermal paint on the sides of the vessel can be used to visually detect hot spots.

9. The temperature of the vapor entering the carbon adsorber should not exceed 120°F.

All information presented herein is believed reliable and in accordance with accepted engineering practices. Siemens makes no warranties as to completeness of information. Users are responsible for evaluating individual product suitability for specific applications. Siemens assumes no liability whatsoever for any special, indirect or consequential damages arising from the sale, resale or misuse of its products.

Siemens reserves the right to change the specifications referred to in this literature at any time, without prior notice.

10. The exit gas temperature should not exceed 150°F.

    For applications where ketones or other reactive compounds are not present: If the exit gas temperature exceeds 150°F or an elevated concentration of CO is detected in the adsorber effluent, carry out the following steps:

    Step 1 Stop the flow of VOC's into the carbon adsorber by switching to clean air.
    Step 2 Immediately monitor the exhaust from the carbon adsorber for the presence of carbon monoxide (CO) using a portable CO monitor.
    Step 3 If the CO concentration is less than 1500 ppmv continue to allow fresh air to enter the carbon adsorber. When the CO concentration returns to ambient levels and the temperature drops to 100°F or lower, the carbon adsorber is ready for reuse.
    Step 4 If the CO in the carbon adsorber exhaust is greater than 1500 ppmv and continues to rise, isolate the carbon adsorber immediately.
    1. Loosen the bolt on the top manway.
    2. Cap the outlet.
    3. Flood carbon adsorber with water through the inlet.
    4. If the inlet is blocked, flood the carbon adsorber through manway.

    NOTE: If a CO monitor is not available, or if ketones or other reactive compounds are present, flood carbon adsorber immediately following the detection of a high exhaust temperature using directions in step 4 above.

11. When high concentrations are expected the carbon adsorber must be monitored every 5 - 10 minutes for VOC's and CO.

12. When the carbon adsorbers are spent, the inlet and outlet should be capped prior to it being moved to storage in preparation for shipment.

13. A continuous nitrogen sweep on the carbon adsorbers can be used. We suggest 1-2 cfm for tank breathing applications. If a check valve is not placed after the carbon adsorber, the nitrogen flow would need to be increased to account for the air that would be drawn back through the carbon adsorber when pumping out of the vapor source tank. **We do NOT recommend a nitrogen sweep on Midas® OCM activated carbon, as oxygen and moisture are required in order for the media to remove H_2S from the vapor stream.**

For applications where there is a risk of exotherm, ask your Technical Sales Representative about our LoRise line of oxidation resistant carbons. This line of specialty carbon products may help reduce the risk of exotherm within the carbon bed.

FOR ADDITIONAL INFORMATION, PLEASE CONTACT YOUR NEAREST CARBON SERVICE BRANCH AT:

866-613-5620

All information presented herein is believed reliable and in accordance with accepted engineering practices. Siemens makes no warranties as to completeness of information. Users are responsible for evaluating individual product suitability for specific applications. Siemens assumes no liability whatsoever for any special, indirect or consequential damages arising from the sale, resale or misuse of its products.

Siemens reserves the right to change the specifications referred to in this literature at any time, without prior notice.

APPENDIX B:
Fan Curve
Fan and Motor Specifications
Fan Manufacturer Operating Instructions

All information presented herein is believed reliable and in accordance with accepted engineering practices. Siemens makes no warranties as to completeness of information. Users are responsible for evaluating individual product suitability for specific applications. Siemens assumes no liability whatsoever for any special, indirect or consequential damages arising from the sale, resale or misuse of its products.

Siemens reserves the right to change the specifications referred to in this literature at any time, without prior notice.

Cincinnati Fan PB-10A 12-1/4 X 2-7/8 Radial Wheel (Full Width) @ 3,450 RPM
Rating Point: 104 ACFM @ 10.7 in. wg SP, 0.075 lb./ft.³ Density, 0.66 BHP, 6.0 in. Inlet

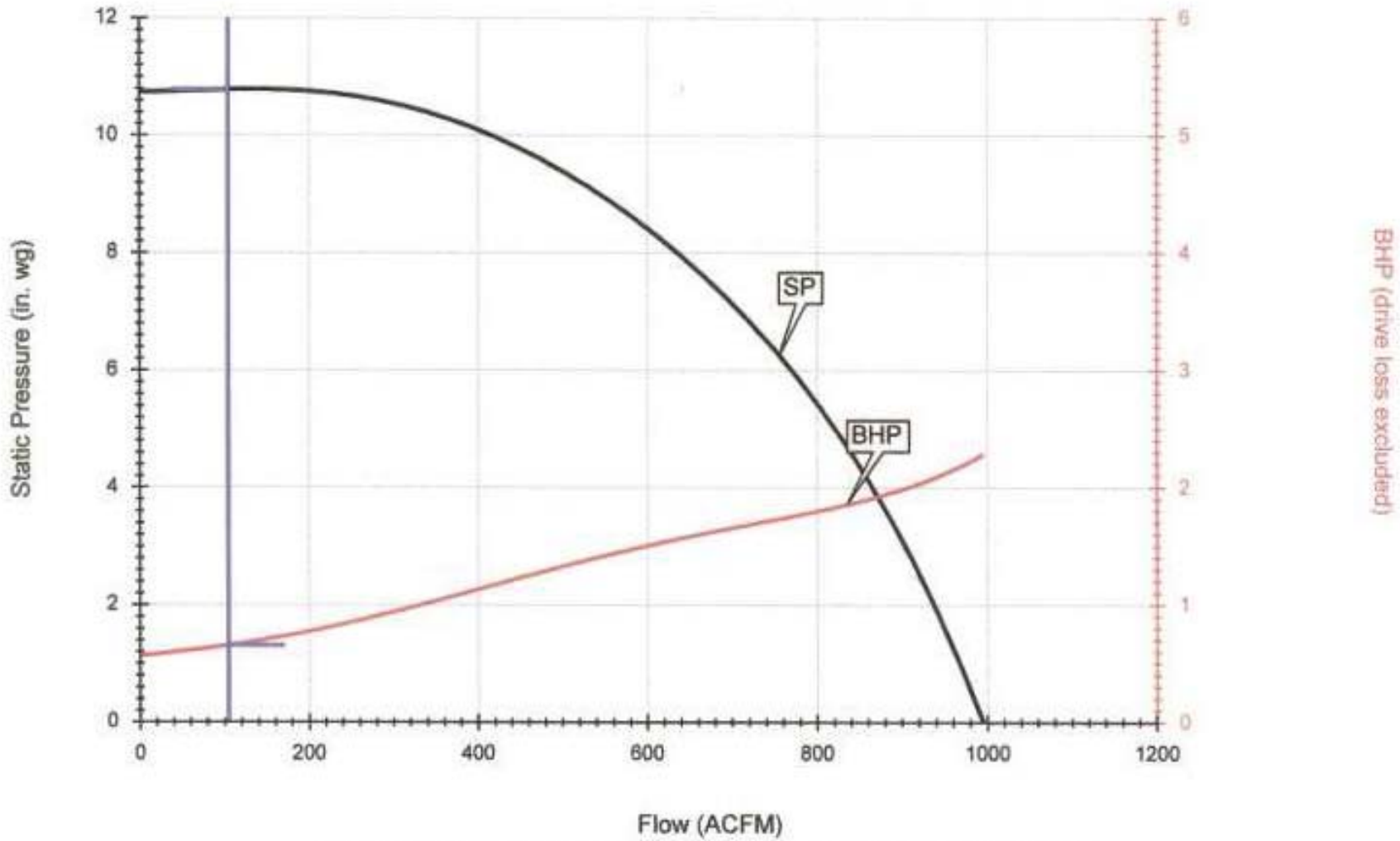

Cincinnati Fan Selector - Copyright © 1998-2009 by Cincinnati Fan and Ventilator Co. All Rights Reserved.

cincinnati fan

Form: OMM-09-0509
Effective: 5/4/09
Supersedes: OMM-09-0207
Part No.: 01231

Installation, Safety, Operation & Maintenance Instructions And Parts List

For Models PB, PBS, SPB, LM and LMF.

Arrangement 4HM Blowers

NOTE

READ ENTIRE MANUAL, INCLUDING "SECTION IV. INITIAL UNIT STARTUP" BEFORE ATTEMPTING TO INSTALL AND OPERATE THIS EQUIPMENT.

BLOWER SPECIFICATIONS

BLOWER SERIAL NUMBER: 1010490 MFG. DATE: 09/22/10

NOTE: The serial number above is a required reference for any assistance. It is stamped on the blower nameplate.

BLOWER SPECIFICATIONS:

Model: PB-10A Arrangement: 4HM Rotation: CW Discharge: BH

Nominal Inlet Size: 6 (in Inches) Wheel Size and Type: 12-1/4 X 2-7/8

BLOWER PERFORMANCE DATA: (If entered on order)

CFM: 104 SP: 10.7 (Inches of Water Gauge) Motor BHP: 0.66

Density: 0.075 Altitude: _____ (Ft. above S.L.) Airstream Temperature: 70 °F.

Fan RPM: 3450 Maximum Safe Fan RPM: Call for > 3450 **DO NOT EXCEED THIS RPM**

MOTOR DATA: (This section is completed only if the motor was supplied by Cincinnati Fan)

HP: 3/4 RPM: 3450 Voltage: 115/230V Phase: 1

Hz: 60 Frame Size: 56C Enclosure: EXP-TEFC Efficiency: Std Eff

IF Motor is EXP, Class(es) & Group(s) are: I/D&II/F&G

Manufacturers Model Number: VL5006A CFV Part Number: 372009B

ATTENTION: RECEIVING DEPARTMENT

All Cincinnati Fan products are packaged to minimize any damage during shipment. The freight carrier is responsible for delivering all items in their original condition as received from Cincinnati Fan. The individual receiving this equipment is responsible for inspecting this unit for any obvious or concealed damage. If any damage is found, it should be noted on the bill of lading before the freight is accepted and the receiver must file a claim with the freight carrier.

LONG TERM STORAGE NOTICE

If this blower will NOT be installed and put into operation within 30 days, refer to the "Long Term Storage Instructions" on pages 12 and 13. Failure to follow all applicable long term storage instructions, will void your warranty. This blower should be stored indoors in a clean, dry location.

⚠ DANGER

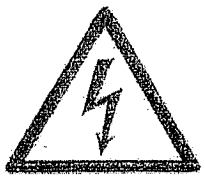

Hazardous voltage can cause electrical shock and death.

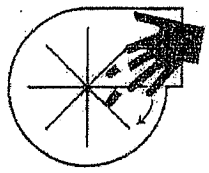

High speed rotating equipment can cause severe personal injury.

Lock out/Tag out to prevent personal injury BEFORE starting ANY service or inspection.

Avoid injury. NEVER operate without ALL required safety guards in place.

Avoid injury. You MUST read and understand all instructions in this manual BEFORE installing.

TABLE OF CONTENTS

I. GENERAL
- A. Unpacking and Handling 2
- B. Safety Accessories & Instructions 2-3

II. INSTALLATION
- A. Vibration 3
- B. Mounting Methods 3-4
- C. Duct Work Connections 4
- D. Safety Guards 4
- E. Dampers and Valves 4
- F. Set Screw & Taper-lock Bushing Torque Values 5

III. ELECTRICAL
- A. Disconnect Switches 5
- B. Motors 5-6
- C. Maximum Blower Speed 6

IV. INITIAL UNIT STARTUP
- A. Pre-Startup & Post-Startup Checks 7
- B. Vibration 8-9

V. ROUTINE INSPECTION & MAINTENANCE 9
- A. Hardware 10
- B. Motor Bearing Lubrication 10
- C. Wheel Balance 10
- D. Vibration 10
- E. Dampers and Valves 10
- F. Safety Equipment or Accessories 10-11

VI. ORDERING PARTS 11

VII. TROUBLESHOOTING 11-12

VIII. LONG TERM STORAGE 12-13

IX. WARRANTY, LIABILITY & RETURNS 14

X. PARTS DRAWING 15

I. GENERAL

A. Unpacking:

Be careful not to damage or deform any parts of the blower when removing it from the packaging container. **All the packaging material should be kept in the event the blower needs to be returned.**

Handling:

Handling of the blower should be performed by trained personnel and be consistent with all safe handling practices. Verify that all lifting equipment is in good operating condition and has the proper lifting capacity. The blower should be lifted using well-padded chains, cables or lifting straps with spreader bars. NEVER **lift the blower by an inlet or discharge flange, motor shaft, motor eye bolt, or any other part of the blower assembly that could cause distortion of the blower assembly.**

B. Safety Instructions & Accessories:

1. **Safety Instructions:**
   All installers, operators and maintenance personnel should read AMCA Publication 410-96, **"Recommended Safety Practices for Users and Installers of Industrial and Commercial Fans".** This manual is included with the blower. Additional copies can be requested by writing us at Cincinnati Fan, 7697 Snider Rd., Mason, OH 45040-9135
2. **Sound:**
   Some blowers can generate sound that could be hazardous to personnel. It is the responsibility of the user to measure the sound levels of the blower and/or system, determine the degree of personnel exposure, and comply with all applicable safety laws and requirements to protect personnel from excessive noise.

3. **Air Pressure and Suction:**
   In addition to the normal dangers of rotating machinery, the blower can present additional hazards from the suction or pressure created at the blower inlet or discharge. Suction at the blower inlet can draw materials into the blower where they become high velocity projectiles at the discharge and cause severe personal injury or death. It can also be extremely dangerous to persons in close proximity to the inlet or discharge as the forces involved can overcome the strength of most individuals.

⚠ WARNING

NEVER OPERATE A BLOWER WITH A NON-DUCTED INLET AND/OR DISCHARGE. IF THE BLOWER INLET AND/OR DISCHARGE IS NON-DUCTED, IT IS THE USERS RESPONSIBILITY TO INSTALL AN INLET AND/OR DISCHARGE GUARD.

4. **Temperature:**
   Many blowers, blower components and all motors operate at temperatures that could burn someone if they come in contact with them. If this potential hazard could exist in your installation, steps must be taken by the user to protect anyone from coming in contact with this equipment.
5. **Spark Resistance;** (Per AMCA Standard 99-0401-86 and ISO 13499)

⚠ DANGER

NO GUARANTEE OF ANY LEVEL OF SPARK RESISTANCE IS IMPLIED BY SPARK RESISTANT CONSTRUCTION. IT HAS BEEN DEMONSTRATED THAT ALUMINUM IMPELLERS RUBBING ON RUSTY STEEL CAN CAUSE HIGH INTENSITY SPARKS. AIR STREAM MATERIAL AND DEBRIS OR OTHER SYSTEM FACTORS CAN ALSO CAUSE SPARKS.

6. **Safety Accessories;**
   Guards:
   All moving parts must be guarded to protect personnel. Safety requirements can vary, so the number and types of guards required to meet company, local, state and OSHA regulations must be determined and specified by the actual user or operator of the equipment.

   NEVER start any blower without having all required safety guards properly installed. All blowers should be checked on a regular schedule, for missing or damaged guards. If any required guards are found to be missing or defective, the power to the blower should be immediately turned off and locked out in accordance with OSHA regulations. Power to the blower should NOT be tuned back on until the required guards have been repaired or replaced.

   This blower can become dangerous due to a potential "windmill" effect, even though all electrical power has been turned off or disconnected. The blower wheel should be carefully secured to prevent any rotational turning ***BEFORE*** working on any parts of the blower/motor assembly that could move.
7. **Access or Inspection Doors:**

⚠ DANGER

NEVER OPEN ANY ACCESS OR INSPECTION DOORS WHILE THE BLOWER IS OPERATING. SERIOUS INJURY OR DEATH COULD RESULT FROM THE AFFECTS OF AIR PRESSURE, AIR SUCTION OR MATERIAL THAT IS BEING CONVEYED. DISCONNECT OR LOCK OUT POWER TO THE BLOWER AND LET THE BLOWER WHEEL COME TO A COMPLETE STOP *BEFORE* OPENING ANY TYPE OF ACCESS OR INSPECTION DOOR.

II. INSTALLATION

A. Vibration:

Before any mounting method is selected, the user should be aware of the effects vibration will have on the blower, motor and other parts. Improper blower installation can cause excessive vibration causing premature wheel and/or motor bearing failure, that is not covered under warranty.

⚠ WARNING

SHUT THE BLOWER DOWN IMMEDIATELY IF THERE IS ANY SUDDEN INCREASE IN VIBRATION.

B. Mounting Methods:

An Arrangement 4HM blower is an Arrangement 4, direct driven blower without the bottom base under the motor. If the motor being supplied is a foot mounted motor, an angle base must be used to connect the blower to the motor. A C-Face motor can be bolted directly to the housing without using an angle bracket. Most Arrangement 4HM blowers are supplied with an inlet or discharge flange for mounting the blower to some type of equipment. Some are supplied with both inlet and discharge flanges.

⚠ CAUTION

In all cases where the blower flange will be the only connection with another structure, the structure MUST be braced enough and/or rigid enough so as not to allow a resonance vibration to occur. Some form of additional bracing under the motor, supplied and installed by the customer, might be required to maintain vibration levels below the maximum limits as indicated in Fig. 3 on page 9. If the blower has an inlet and a discharge flange, be careful not to cause "binding" when bolting them down. That will most definitely cause a vibration problem.

1. **Mounting Blower By Inlet Flange only;**
   a. **With motor shaft horizontal (parallel with floor):**
   If mounting the blower by the inlet flange only and with the motor shaft horizontal (parallel with floor), it is very likely additional support under the motor will be required.
   b. **With motor shaft vertical (perpendicular to floor):**
   This is the best way to mount an Arrangement 4HM blower as long as the mounting plate the flange will be bolted to is rigid enough to support the weight of the blower/motor assembly.

2. **Mounting Blower By Discharge Flange only;**
   a. **With motor shaft horizontal or vertical:**
   Because of the forces involved, it will most likely be necessary to add additional support under the motor. Mount the blower and take the vibration readings as shown in **Fig. 2** on page 8. If they exceed the maximums shown in **Fig. 3** on page 9, you will need to add additional support.

C. Duct Work Connections:

All ducting or accessories, added by the user, should be independently supported. DO NOT use the blower/motor assembly to support any additional weight. Inlet and/or discharge duct elbows should be located a minimum of 2 blower wheel diameters from the blower. Any duct elbows located closer than 2 wheel diameters to the blower inlet or discharge **WILL** reduce the air performance and blower efficiency. Any duct elbows near the blower discharge should be in the **same rotational direction** as the **blower rotation**.

Non-Ducted Blower Inlet:
Any blower with no ducting on the inlet **must** have an inlet guard. The blower should be located so the blower inlet is, at least, 1 wheel diameter away from any wall or bulkhead to eliminate a reduction in air flow.

Non-Ducted Blower Discharge:
Any blower with no ducting on the discharge **must** have a discharge guard.

D. Safety Guards:

Cincinnati Fan offers guards, as optional, to keep your blower in compliance with OSHA safety regulations. These include inlet or discharge guards. Any blowers built with high temperature construction, a "heat slinger guard" is standard. It is the responsibility of the user to make sure this blower meets all local, state and OSHA safety regulations. If you have a specific guard requirement not covered by OSHA, please contact the local Cincinnati Fan sales office for assistance.

E. Dampers and Valves: (Airflow control devices)

If the blower is supplied with any type of air flow control device, it should be closed before initial start-up of the blower to minimize overloading of the motor. Any airflow control device, with bearings, should be maintained in accordance with the manufacturers instructions. Any air flow control device, with an automatic control mechanism, should be adjusted per the manufacturers recommendations.

F. **Set Screw and Taper-lock Bushing Torque Values:**

All blower wheel set screws are tightened to the proper torque prior to shipment. Some wheels may have taper-lock hubs and split, taper-lock bushings to secure the wheel to the motor shaft.

NOTE: Check all set screw or taper-lock bushing torques. Forces encountered during shipment, handling, rigging and temperature can affect factory settings. For correct torque values, see **Tables 1** and **2** below.

Table 1

SET SCREW TORQUE VALUES		
Diameter & Number of Treads/Inch	Hex Wrence Size (Across Flats)	Required Torque (Inch Pounds)
1/4-20	1/8"	65
5/16-18	5/32"	165
3/8-16	3/16"	228
7/16-14	7/32"	348
1/2-13	1/4"	504
5/8-11	5/16"	1104

Table 2

TORQUE VALUES FOR TAPER-LOCK BUSHINGS	
Taper-lock Bushing Size	Required Torque (Inch Pounds)
H	95
B	192
P	192
Q	350
R	350

⚠ CAUTION

Set screws should NEVER be used more than once. If the set screws are loosened, they MUST be replaced. Use only knurled, cup-point, set screws with a nylon locking patch.

III. ELECTRICAL

A. **Disconnect Switches:**

All blower motors should have an independent disconnect switch located in close visual proximity to turn off the electrical service to the blower motor. **Disconnects must be locked out in accordance with OSHA "lock out-tag out" procedures any time inspection or maintenance is being performed on the blower and/or motor assembly. The "lock out-tag out" procedure should be performed by a licensed electrician or authorized personnel.** All disconnects should be sized in accordance with the latest NEC codes (National Electric Codes) and any local codes and should be installed only by a licensed electrician. "Slow blow" or "time delay" fuses or breakers should be used since the initial start-up time for the blower motor, although rare, can be up to 10 seconds.

B. **Motors:**

⚠ DANGER

ALL WIRING CONNECTIONS, INSPECTION AND MAINTENANCE OF ANY MOTOR MUST BE PERFORMED BY A LICENSED ELECTRICIAN IN ACCORDANCE WITH THE MOTOR MANUFACTURERS RECOMMENDATIONS, ALL ELECTRICAL CODES AND OSHA REGULATIONS. FAILURE TO PROPERLY INSTALL, MAKE WIRING CONNECTIONS, INSPECT OR PERFORM ANY MAINTENANCE TO A MOTOR CAN RESULT IN MOTOR FAILURE, PROPERTY DAMAGE, EXPLOSION, ELECTRICAL SHOCK AND DEATH.

1. **DO NOT connect or operate a motor without reading the motor manufacturers instructions supplied with the blower.** The basic principle of motor maintenance is: **KEEP THE MOTOR CLEAN AND DRY.** This requires periodic inspections of the motor. The frequency of the inspections depends on the type of motor, the service and environment it will be subjected to and the motor manufacturers instructions.
2. **Cleaning:** Cleaning should be limited to exterior surfaces only. **Follow motor manufacturers cleaning instructions.**
3. **Lubrication:** Most small motors have sealed bearings that are permanently lubricated for the life of the motor. Some larger motors have grease plugs that should be replaced with grease fittings to perform re-lubrication. These motors, or any motor with grease fittings, should be lubricated in accordance with the motor manufacturers recommendations. Lubrication frequency depends on the motor horsepower, speed and service. **BE SURE** you use compatible grease and **DO NOT** over grease.
4. **Location:** If the motor will be outside and subjected to the weather, it is recommended that a weather cover be installed to keep rain and snow off of the motor. No motors are guaranteed to be "watertight". Be careful to allow enough openings between the motor and the motor cover to let the motor "breath". If the back end of the motor is covered, the cover should be no closer than 3" to the back of the motor for proper ventilation.

5. **Wiring Connections:** All wiring connections should be made for the proper voltage and phase as shown on the motor nameplate. Connections should follow the motor manufacturers recommendations as shown on the wiring schematic. This wiring diagram will be located on the outside of the motor, inside of the motor conduit box or on the motor nameplate. **Reversing some wires might be necessary to get the correct blower rotation.**
6. **Motors with Thermal Overload Protection:** If a motor is equipped with thermal overloads, the thermal overload must be wired per the wiring schematic to be operable. ***There are 3 types of thermal overloads:***
   a. **Automatic:** These will automatically shut the motor down if the internal temperature exceeds the design limits.

⚠ DANGER

MAKE SURE YOU LOCK OUT THE POWER TO THE MOTOR BEFORE INSPECTING ANY MOTOR WITH AUTOMATIC THERMALS. WHEN THE THERMALS COOL DOWN, THEY WILL ALLOW THE MOTOR TO AUTOMATICALLY START UP AGAIN, UNLESS YOU HAVE LOCKED OUT THE POWER TO THE MOTOR.

   b. **Manual:** These motors will have a button on them. If the motor overheats, it will shut down. After you have inspected the motor and eliminated the over heating problem, you will need to "reset" it by pushing the button. **You should still lock out the power BEFORE inspecting the motor.**
   c. **Thermostats:** This type of thermal is a temperature sensing device **ONLY**. If the motor overheats, the thermostats will open or close (depending on the type) and send a **"signal"** to the electrical box. *THEY WILL NOT TURN THE MOTOR OFF.* **These are pilot circuit devices that must be connected to the magnetic starter circuit.**

7. **EXPLOSION PROOF Motors:** No motor is explosion proof. Explosion proof (EXP) motors are designed so if there is an explosion **WITHIN** the motor, the explosion will be **CONTAINED INSIDE** the motor and not allowed to get out to the atmosphere. All explosion proof motors must be selected based on the atmosphere and/or the environment the motor will be operating in. Explosion proof motors are designed, rated, and labeled for their operating conditions based on Classes, Groups and "T" Codes. **The Class, Group and "T" Code of an EXP motor MUST be selected based on the atmosphere and/or environmental conditions the motor will be operating in. Consult the NEC (National Electric Code) and the NFPA (National Fire Protection Association) for the proper EXP motor Class, Group and "T" Code required for your specific application and location.**

⚠ DANGER

IF AN EXPLOSION PROOF MOTOR IS USED IN AN AREA CONTAINING VOLITILE LIQUIDS, GASES, FUMES OR DUST FOR WHICH THE MOTOR WAS NOT DESIGNED TO OPERATE IN, AN EXPLOSION AND/OR FIRE CAN OCCUR.

NOTICE:

a. **All EXP motors have some type of thermal overload as required by UL (Underwriters Laboratories). Refer to all of Section 6 above.**
b. **All EXP motors are required to have the UL (Underwriters Laboratories) and CSA (Canadian Standards Association) listing numbers on the motor name plate or on a separate plate attached to the motor. The Class, Group and "T" Code the motor is designed for must also be listed.**

8. **Normal Motor Operating Temperatures:**
   Using your hand to test the normal running temperature of a motor can be a very painful experience;
   The normal operating temperature of a fully loaded, open type, electric motor operating in a 70°F. (21° C.) ambient temperature is 174°F. (79° C.)

C. **Maximum Blower Speed and Motor Speed Controllers:**

If you will be using any type of motor speed controller with this blower, **DO NOT** exceed the **maximum safe blower speed.** Installing and using a speed control devise requires special training and certification as required by the speed control manufacturer. See the manufacturers instructions for proper use, installation and wiring connections for the maximum speed settings. It may also be necessary to "block out" some speeds to eliminate a resonant vibration problem. The maximum safe blower speed is shown on the data sheet shipped with the blower. If you have lost the data sheet, contact Cincinnati Fan or our sales office for your area. You must have the serial number from the **blower** name plate for us to determine the maximum safe blower speed. Cincinnati Fan will only extend the motor manufacturers warranty, when used with a speed controlling devise, if the motor has the words **"Inverter Duty"** marked on the motor name plate. If the motor does not have **"Inverter Duty"** marked on the motor name plate, and you have a motor failure, you will be required to contact the motor manufacturer for any service or warranty claims.

IV. INITIAL UNIT STARTUP

NOTICE: Failure to complete and document all the following pre-startup and both post-startup checks, listed in sections A (below) and B on page 8, could void all warranties.

A. Pre-Startup & Post-Startup Checks: (Check blocks as each step is completed. Retain this for your records.)

A1. Pre-Startup Checks Completed By: _____ **DATE:** _____

A2. 8 Hour, Post-Startup Checks Completed By: _____ **DATE:** _____

A3. 3 Day, Post-Startup Checks Completed By: _____ **DATE:** _____

MAKE SURE POWER TO THE MOTOR IS LOCKED OUT BEFORE STARTING PRE-STARTUP OR POST-STARTUP CHECKS.

1. ☐☐☐ If possible, *CAREFULLY* spin the blower wheel by hand to ensure it rotates freely and no rubbing or clicking noise is heard.
2. ☐☐☐ Check all blower mounting flange and duct work hardware to make sure it is tight.
3. ☐☐☐ Check all blower wheel set screws to make sure they are tight per **Table 1** on page 5.
4. ☐☐☐ If the wheel has a taper-lock bushing, make sure the bolts are tightened per **Table 2** on page 5.
5. ☐☐☐ Make certain there is no foreign material in the blower or duct work that can become a projectile.
6. ☐☐☐ Make sure any inspection doors in the duct work are securely bolted or locked.
7. ☐☐☐ Ensure all electrical power components are properly sized and matched for your electrical system.
8. ☐☐☐ Check that all required guards are properly secured.
9. ☐☐☐ Any dampers should be fully opened and closed to make sure there is no binding or interference.
10. ☐☐☐ If your blower is mounted on an elevated support structure, make sure the structure is welded at all the joint connections and the structure is properly braced to prevent "side sway".
11. ☐☐☐ Close any dampers to minimize load on motor. Especially on blowers with high temperature construction. **Never** subject a "cold" blower to a "hot" gas stream. If the blower will be handling "hot gases" greater than 150°F (65°C) it is imperative that the blower be subjected to a gradual rate of temperature increase, not to exceed 15°F/minute (8°C/minute). The same temperature limits are also important when the blower is experiencing a drop in temperature until the temperature drops down to 150°F (65°C). Only, when the entire blower has reached an equilibrium temperature of 150°F (65°C), or less, should the power be turned off.
12. ☐☐☐ Make sure the power source connections to the blower motor are per the motor manufacturers instructions.
13. ☐☐☐ Make sure the blower wheel is stationary prior to startup. **Starting a blower with a wheel that is rotating backwards can cause wheel damage.**
14. ☐☐☐ Apply power to the blower motor momentarily (i.e. "bump start") to check for proper blower wheel rotation. If the blower is rotating in the wrong direction, reconnect the motor leads per the motor manufacturers wiring schematic. **Blower rotation is determined by viewing the blower from the motor side of the blower, NOT from the inlet side.** After reconnecting the leads, repeat this step. **See Fig. 1 below.**

Fig. 1

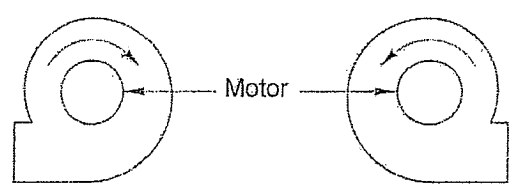

Clockwise (CW) Rotation — **Counter-Clockwise (CCW) Rotation**

15. ☐☐☐ Apply power to the blower motor and let it come up to full speed. **Turn off the power.** Look and listen for any unusual noise or mechanical abnormality while the blower wheel is still spinning. If any are noticed, lock out the power, wait for the blower wheel to come to a complete stop, locate the cause and correct it.
16. ☐☐☐ Unlock power and start the blower.
17. ☐☐☐ Measure, record and keep the following motor data for future reference and comparison:
(Single phase motors will only have L1 and L2 leads)

Amperage draw on each motor lead: L1 _____ **L2** _____ **L3** _____
(Running amps **SHOULD NOT** exceed the motor nameplate amps for the voltage being operated on)

Voltage coming to motor leads: L1_____ **L2**_____ **L3**_____
(Should be about the same input voltage on all leads)

B. Vibration:

The blower was balanced at the factory to comply with ANSI/AMCA Standard 204-05, Category BV-2. However, rough handling in shipment and/or erection, weak and/or non-rigid foundations, and misalignment may cause a vibration problem after installation. After installation, the vibration levels should be checked by personnel experienced with vibration analysis and vibration analysis equipment.

NOTE:

The blower SHOULD NOT be operated if the vibration velocity of the fan exceeds 0.50 inches per second, filter out, with the blower rigidly mounted.

Vibration readings for direct driven blowers should be taken on the motor at the top, sides and end as per **Fig. 2** below. After you have taken your vibration readings, write them down in the spaces below and keep for future comparison.

⚠ DANGER

If the blower is going to be conveying material, it is the users responsibility to periodically turn the blower off and lock out the power. The blower wheel should then be checked for material build-up and/or erosion. If material has built up on any parts of the wheel, it MUST be removed and cleaned before it is put back into service. If any parts of the wheel have been eroded, the wheel MUST be replaced. Failure to perform this inspection can cause excessive vibration that will damage the blower and/or motor bearings. When vibration becomes excessive, it will lead to complete blower failure that could cause property damage, severe personal injury and death. The user must determine the frequency of this inspection based on the actual circumstances of their operation, BUT checking the vibration readings should NEVER exceed a 12 month period. For the AMCA/ANSI standard for vibration limits, see Fig. 3 on page 9.

Fig. 2

VIBRATION METER PROBE POSITIONS

For Arrangement 4HM Blowers

	1	2	3	4	5
A					
B					
C					

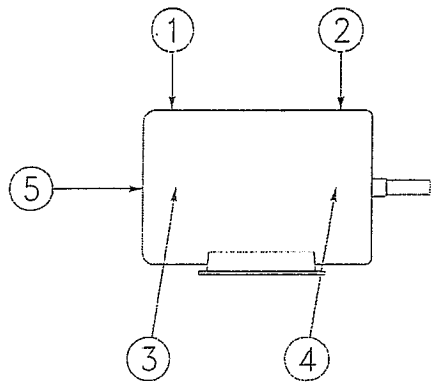

A Pre-Startup ..... Readings taken by: _____ Date: _____

B 8 Hour Post-Startup ..... Readings taken by: _____ Date: _____

C 3 Day Post-Startup ..... Readings taken by: _____ Date: _____

Fig. 3 Vibration Severity Chart

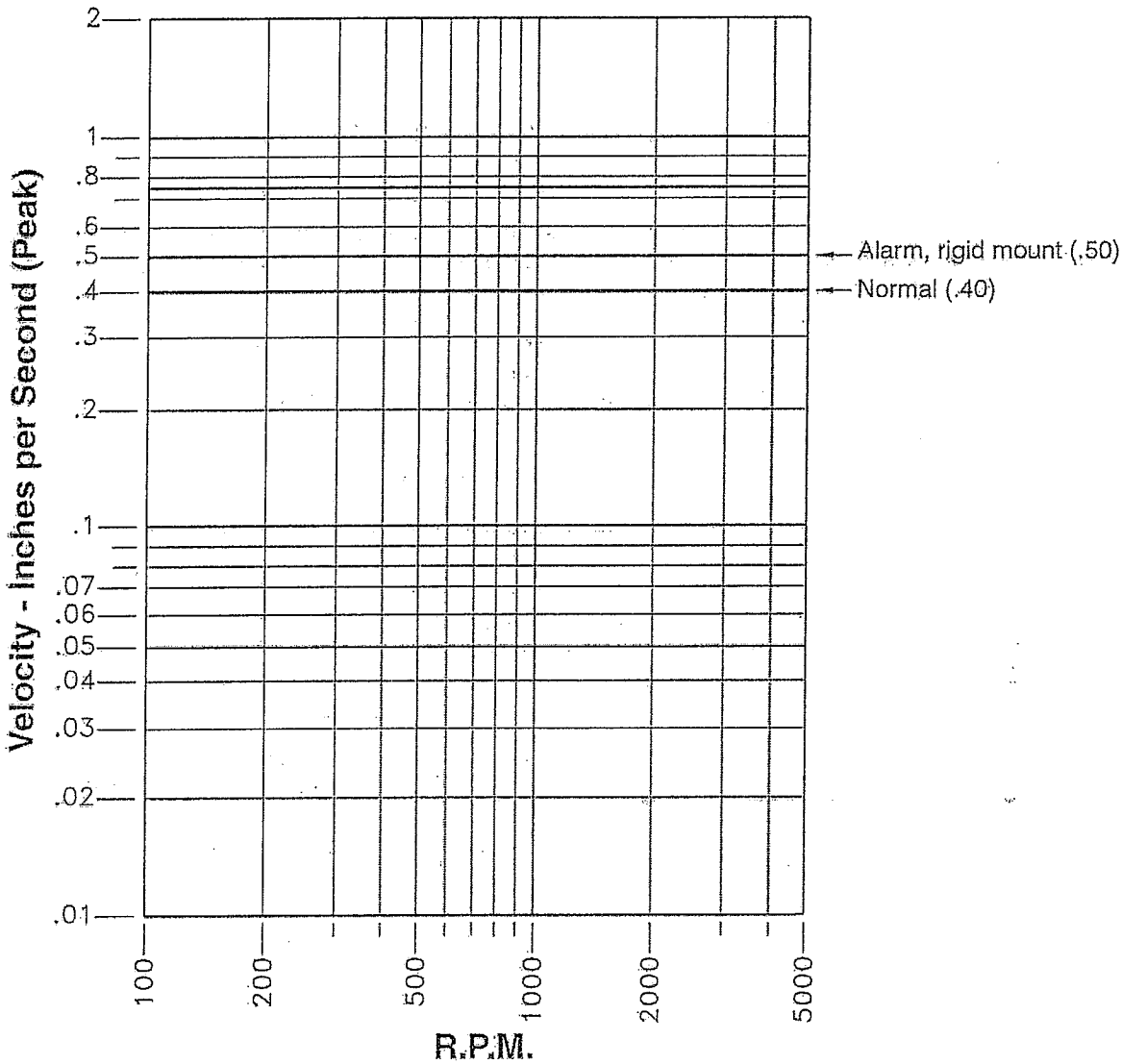

V. ROUTINE INSPECTION & MAINTENANCE

Periodic inspection of all the blower parts is the key to good maintenance and trouble-free operation. The frequency of inspections must be determined by the user and is dependent upon the severity of the application. BUT, it should NEVER exceed a 12 month period. The user should prepare an inspection and maintenance schedule and make sure it is adhered to.

⚠ WARNING

BEFORE STARTING ANY INSPECTION OR MAINTENANCE, BE SURE BLOWER IS TURNED OFF, POWER IS LOCKED OUT AND THE BLOWER WHEEL HAS BEEN CAREFULLY SECURED TO PREVENT WIND MILLING. IF THE OPERATING CONDITIONS OF THE BLOWER ARE TO BE CHANGED (SPEED, PRESSURE, TEMPERATURE, ETC.) CONSULT CINCINNATI FAN, OR OUR SALES OFFICE FOR YOUR TERRITORY, TO DETERMINE IF THE UNIT WILL OPERATE SAFELY AT THE NEW CONDITIONS.

A. Hardware:

All blower and foundation hardware should be checked to make sure it is tight. Wheel set screws or taper-lock bushings should be tightened to the torque values shown in **Tables 1 and** 2 on page 5.

NOTE: If any set screws have come loose, they must be thrown away and replaced. NEVER use set screws more than once. **Replace with knurled, cup-point set screws with a nylon locking patch.**

B. Motor Bearing Lubrication:

1. Motor Bearings:

Most smaller motors have sealed bearings that never require re-lubrication for the life of the motor. For any motors with grease fittings, consult the motor manufacturers recommendations with reference to the lubrication frequency and the type of grease that should be used.

DO NOT over grease the motor bearings. Generally, 1-2 shots should be enough. Use a hand operated grease gun at no more than 40 PSI. ***IF POSSIBLE, CAREFULLY*** **lubricate the motor bearings while the motor is running.**

C. Wheel Balance:

All blower wheels are balanced at the factory. It is not uncommon that additional "trim balancing" is required after the blower is assembled. Trim balancing of the blower assembly, in the field, is typically always necessary for all replacement wheels. **After any wheel is installed, the final balance of the entire blower assembly should be checked.** Refer to **Section B** on page 8 and **Fig.** 3 on page 9. Air stream material or chemicals can cause abrasion or corrosion of the blower parts. This wear is generally uneven and, over time, will lead to the wheel becoming unbalanced, causing excessive vibration. When that happens, the wheel must be rebalanced or replaced. The other air stream components should also be inspected for wear or structural damage and cleaned or replaced if necessary. **After cleaning any blower wheel, it should be balanced and then "trim balanced" on the motor shaft.**

There are three ways to balance a blower wheel:

1. **Add balancing weights for fabricated aluminum, steel or stainless steel wheels:**
   Balance weights should be rigidly attached to the wheel at a location that will not interfere with the blower housing nor disrupt air flow. They should (if at all possible) be welded to the wheel. When trim balancing the wheel, **on the blower,** be sure to ground the welder **directly** to the blower wheel. Otherwise, the welding current will likely pass through the motor and damage the motor bearings.
2. **Grinding off material for cast aluminum wheels:**
   If you are grinding on the wheel to remove material, be very careful not to grind too much in one area. That could affect the structural integrity of the wheel.
3. **Forward curved wheels, Models LM and LMF only (also known as squirrel cage or multivane wheels).**
   These wheels have balancing clips attached to individual blades around the wheel. That is the only proper way to balance this type of wheel.
   NOTE:
   Removing any forward curve wheel from the blower to clean it, requires special attention when reinstalling the wheel back into the blower housing. Make sure you reinstall the wheel so the proper wheel-to-inlet clearance is maintained. Failure to do this will affect the blowers airflow (CFM), static pressure (SP) capabilities and efficiency. Consult Cincinnati Fan or our local sales office for your area for assistance if necessary.

D. Vibration:

As mentioned previously in this manual, excessive vibration can cause premature motor bearing failure that could lead to catastrophic failure of the blower. After performing any routine maintenance, the vibration readings should be taken again. New readings should be taken (maximum every 12 months) and compared to the readings you recorded in **Fig.** 2 on page 8, during the initial startup. **If any major differences are present, the cause should be determined and corrected before the blower is put back into operation.**

The most common causes of vibration problems are:

1. Wheel unbalance.
2. Mechanical looseness.
3. Poor blower inlet and/or discharge conditions.
4. Foundation stiffness.

E. Dampers and Valves: (Airflow control devices)

Turn off and lock out power to the blower motor. Any dampers or valves should be periodically inspected to make sure all parts are still operable within their full range and there is no interference with any other damper or blower components. Any bearings or seals should be checked for their proper function. The manufacturers maintenance instructions should be followed.

F. Safety Equipment & Accessories:

It is the users responsibility to make sure that all safety guards required by the company, local, state and OSHA regulations are properly attached and fully functional at all times. If any guards become defective or non-functional at any time, **the power to the blower MUST be turned off and locked out** until complete repairs and/or replacements have been made, installed and inspected by authorized personnel.

Any accessories used in conjunction with the blower should also be inspected to make sure they are functioning within their intended limits and design specifications. The manufacturers maintenance manuals should be referred to for correct maintenance procedures. These accessories include, but are not limited to, the following:
Shaft seals, inspection doors, vibration isolators or vibration bases, air flow or pressure measuring equipment, hoods, controls, special coatings, silencers, expansion joints, valves, flexible connectors and filters.

VI. ORDERING REPLACEMENT PARTS:

Under normal conditions, you should not need any spare or replacement parts for at least 24 months after shipment from Cincinnati Fan. That does not include any wear due to abrasion, corrosion, excessive temperatures, abuse, misuse, accident or any severe conditions the fan was not designed for.

NOTICE:

1. **If this blower is vital to any process that could cost you lost revenue, we strongly recommend that you keep a replacement blower wheel and motor at your location.**

2. **If this blower is vital for the safety of any people and/or animals, we strongly recommend that you keep a complete blower/motor assembly, as originally ordered, at your location.**

To order any parts or complete units, contact us for the name of our sales office for your area. Or you can find them on our website at: **www.cincinnatifan.com**

WE MUST HAVE THE BLOWER SERIAL NUMBER FROM THE BLOWER NAME PLATE TO IDENTIFY PARTS CORRECTLY.

VII. TROUBLESHOOTING

⚠ DANGER

Troubleshooting should only be performed by trained personnel. Any potential electrical problems should only be checked by a licensed electrician. All safety rules, regulations and procedures MUST be followed. Failure to follow proper procedures can cause property damage, severe bodily injury and death.

Potential problems and causes listed below are in no order of importance or priority. The causes are only a list of the most common items to check to correct a problem. If you find the cause of a problem, **DO NOT** assume it is the **ONLY** cause of that problem. Different problems can have the same causes.

PROBLEM	CAUSE
Excessive Vibration	1. Loose mounting bolts, wheel set screws, taper-lock hubs. 2. Worn or corroded blower wheel. 3. Accumulation of foreign material on blower wheel. 4. Bent motor shaft. 5. Worn motor bearings. 6. Motor out of balance. 7. Inadequate structural support. 8. Support structure not sufficiently cross braced. 9. Weak or resonant foundation. 10. Foundation not flat and level.
Airflow (CFM) Too Low	1. Blower wheel turning in wrong direction (**rotation**). 2. Actual system static pressure (**SP**) is higher than expected. 3. Motor speed (**RPM**) too low. 4. Dampers or valves not adjusted properly. 5. Leaks or obstructions in duct work. 6. Filters dirty. 7. Inlet and/or discharge guards are clogged. 8. Duct elbow too close to blower inlet and/or discharge. 9. Improperly designed duct work 10. Blower wheel not properly located relative to the inlet bell (Models **LM** and **LMF** only).
Airflow (CFM) Too High	1. Actual system static pressure (**SP**) is lower than expected. 2. Motor speed (**RPM**) too high. 3. Filter not in place. 4. Dampers or valves not adjusted properly.

PROBLEM	CAUSE
Motor Overheating	**NOTE: A normal motor will operate at 174°F. See B-8 on page 6.** 1. Actual system static pressure **(SP)** is lower than expected. 2. Voltage supplied to motor is too high or too low. 3. Motor speed **(RPM)** too high or defective motor. 4. Air density higher than expected. 5. Motor wired incorrectly or loose wiring connections. 6. Cooling fan cover on back of motor is clogged. (Fan cooled motors only.)
Excessive Noise	1. Wheel rubbing inside of housing. 2. Worn or corroded blower wheel. 3. Accumulation of foreign material on blower wheel. 4. Loose mounting bolts, wheel set screws, or taper-lock hubs. 5. Bent motor shaft. 6. Worn motor bearings. 7. Motor out of balance. 8. Motor bearings need lubrication. 9. Vibration originating elsewhere in system. 10. System resonance or pulsation. 11. Inadequate or faulty design of blower support structure. 12. Blower operating near "stall" condition due to incorrect system design or installation.
Fan Doesn't Operate	1. Motor wired incorrectly. 2. Incorrect voltage supply. 3. Defective fuses or circuit breakers. 4. Power turned off elsewhere. 5. Motor wired incorrectly or loose wiring connections. 6. Defective motor.

VIII. LONG TERM STORAGE INSTRUCTIONS: (Storage exceeding 30 days after receipt of equipment)

NOTE: Failure to adhere to these instructions voids all warranties in their entirety.

1. Storage site selection:
   a. Level, well-drained, firm surface, in clean, dry and warm location. Minimum temperature of 50°F (10°C).
   b. Isolated from possibility of physical damage from construction vehicles, erection equipment, etc.
   c. Accessible for periodical inspection and maintenance.
2. The blower should be supported under each corner of its base to allow it to "breath". Supports (2 x 4's, timbers, or railroad ties) should be placed diagonally under each corner.
3. If the equipment is to be stored for more than three (3) months, the entire blower assembly must be loosely covered with plastic, **but not tightly wrapped**.
4. Storage Maintenance:

   A periodic inspection and maintenance log, by date and action taken, must be developed and maintained for each blower. See example below. Each item must be checked monthly.

EXAMPLE:

Storage / Maintenance Schedule Log

ITEM	ACTION	DATES CHECKED
1	Re-inspect units to insure any protective devices used are functioning properly. Check for scratches in the finish which will allow corrosion or rust to form.	
2	Rotate wheel a minimum of 10 full revolutions to keep the motor bearing grease from separating and drying out. ***This is a critical step.***	

Long Term Storage instructions continued on page 13.

5. General Motor Procedure:

If the motor is not put into service immediately, the motor must be stored in a clean, dry, warm location. Minimum temperature of 50°F. (10°C,). Several precautionary steps must be performed to avoid motor damage during storage.

a. Use a "Megger" each month to ensure that integrity of the winding insulation has been maintained. Record the Megger readings. Immediately investigate any significant drop in insulation resistance.
b. **DO NOT** lubricate the motor bearings during storage. Motor bearings are packed with grease at the factory.
c. If the storage location is damp or humid, the motor windings **must** be protected from moisture. This can be done by applying power to the motor's space heaters, (IF AVAILABLE) while the motor is in storage. If the motor does not have space heaters, storing it in a damp or humid location will, very quickly, cause internal corrosion and motor failure which is not warranted.

***NOTE*:**
For specific storage instructions, for the actual motor and any accessory parts that were supplied, refer to the manufacturer's instructions.

IX. LIMITED WARRANTY:

Cincinnati Fan & Ventilator Company (Seller) warrants products of its own manufacture, against defects of material and workmanship under normal use and service for a period of eighteen (18) months from date of shipment or twelve (12) months from date of installation, whichever occurs first. This warranty does not apply to any of Seller's products or any part thereof which has been subject to extraordinary wear and tear, improper installation, accident, abuse, misuse, overloading, negligence or alteration. This warranty does not cover systems or materials not of Seller's manufacture. On products furnished by Seller, but manufactured by others, such as motors, Seller extends the same warranty as Seller received from the manufacturer thereof. Expenses incurred by Purchaser's in repairing or replacing any defective product will not be allowed except where authorized in writing and signed by an officer of the Seller.

The obligation of the Seller under this warranty shall be limited to repairing or replacing F.O.B. the Seller's plant, or allowing credit at Seller's option. **THIS WARRANTY IS EXPRESSLY IN LIEU OF ALL OTHER WARRANTIES EITHER EXPRESSED OR IMPLIED INCLUDING THE WARRANTIES OF MERCHANTABILITY AND FITNESS FOR A PARTICULAR PURPOSE AND OF ALL OTHER OBLIGATIONS AND LIABILITIES OF THE SELLER. THE PURCHASER ACKNOWLEDGES THAT NO OTHER REPRESENTATIONS WERE MADE TO PURCHASER OR RELIED UPON BY PURCHASER WITH RESPECT TO THE QUALITY OR FUNCTION OF THE PRODUCTS HEREIN SOLD.**

Removal of the Sellers nameplate or any generic fan nameplate containing the fan serial number voids all warranties, either written or implied. Failure to complete and document all the pre-startup and post startup checks and perform the suggested routine maintenance checks voids all warranties, either written or implied.

LIMITATION OF LIABILITY:

Notice of any claim, including a claim for defect in material or workmanship, must be given to Seller in writing within 30 days after receipt of the equipment or other products. Seller reserves the right to inspect any alleged defect at Purchaser's facility before any claim can be allowed and before adjustment, credit, allowance replacement or return will be authorized. See **RETURNS** below. Seller's liability with respect to such defects will be limited to the replacement, free of charge, of parts returned at Purchaser's expense F.O.B. Seller's plant and found to be defective by the Seller.

IN NO EVENT WILL SELLER BE LIABLE FOR SPECIAL, INDIRECT, INCIDENTAL OR CONSEQUENTIAL DAMAGES, WHETHER IN CONTACT, TORT, NEGLIGENCE, STRICT LIABILITY OR OTHERWISE, INCLUDING WITHOUT LIMITATION DAMAGES FOR INJURY TO PERSONS OR PROPERTY, LOST PROFITS OR REVENUE, LOST SALES OR LOSS OF USE OF ANY PRODUCT SOLD HEREUNDER. PURCHASER'S SOLE AND EXCLUSIVE REMEDY AGAINST SELLER WILL BE THE REPLACEMENT OF DEFECTIVE PARTS AS PROVIDED HEREIN OR REFUND OF THE PURCHASE PRICE FOR DEFECTIVE PRODUCTS, AT SELLER'S SOLE OPTION. SELLER'S LIABILITY ON ANY CLAIM, WHETHER IN CONTRACT, TORT, NEGLIGENCE, STRICT LIABILITY OR OTHERWISE, FOR ANY LOSS OR DAMAGE ARISING OUT OF OR IN CONNECTION WITH PURCHASER'S ORDER OR THE PRODUCTS OR EQUIPMENT PURCHASED HEREUNDER, SHALL IN NO CASE EXCEED THE PURCHASE PRICE OF THE EQUIPMENT GIVING RISE TO THE CLAIM.

RESPONSIBILITY:

It is the understanding of the Seller that Purchaser and/or User will use this equipment in conjunction with additional equipment or accessories to comply with all Federal, State and local regulations. The Seller assumes no responsibility for the Purchaser's or Users compliance with any Federal, State and local regulations.

RETURNS:

Cincinnati Fan & Ventilator Company assumes no responsibility for any material returned to our plant without our permission. An **RMA** (Return Material Authorization) number must be obtained and clearly shown on the outside of the carton or crate and on a packing slip. Any items returned must be shipped freight prepaid. Failure to comply will result in refusal of the shipment at our receiving department.

DISCLAIMER

This manual, and all its content herein, is based on all applicable known material at the time this manual was created. **Any parts of this manual are subject to change at any time and without notice.**

If any statements, diagrams and/or instructions contained herein, **for components not manufactured by the Seller,** conflict with instructions in the manufacturer's manual (i.e.: motors, dampers, etc.), the instructions in the manufacturer's manual, for that component take precedent.

Should you want the latest version of this manual, please contact us or our sales office for your area. Or, you can print a current version by going to our website at: **www.cincinnatifan.com**

cincinnati fan

7697 Snider Road, Mason, OH 45040-9135
Phone: (513) 573-0600 Fax: (513) 573-0640
E-Mail: sales@cincinnatifan.com

FAN SELECTION And SPECIFICATIONS

Your Cincinnati Fan Representative:
Tim Lippert
P. F. Sherman Co.
3727 Poplar Avenue
Pittsburgh PA 15234
(412) 561-8218 Phone
(412) 561-8268 Fax
tim@pfsherman.com

Monday, August 05, 2013

Job Name: SIEMENS INDUSTRY, INC.
Reference: California Quote: 247721

Operating Requirements

Volume, ACFM	100
Static Pressure, in. wg	12.0
Density, lb./ft.³	0.075
Operating Temperature, °F	70
AMCA Arrangement No.	4HM
Motor Frequency, Hz	60
Start-Up Temperature, °F	70

Fan Selection and Specifications

Model	PB-14A
Fan RPM	3,500
Suggested Motor RPM	3,500
Actual Flow, ACFM	100
Actual SP, in. wg	12.0269
Percentage of Peak SP	97.8%
Wheel Description	13 X 3-1/4 Radial
Wheel Width, %	100%
Wheel Diameter, in.	13.00
Number of Blades	8
WR², lb. - ft.²	1.0
Tip Speed, ft./min.	11,912
Inlet Diameter, in.	6.00
Inlet Area, ft.²	0.20
Outlet Dimensions	6.00 in. dia.
Outlet Area, ft.²	0.20
Outlet Velocity, ft./min.	510
Fan BHP	0.47
Suggested Motor HP	0.5
Static Efficiency, %	40.1%
Cold Start BHP	0.47
Construction Class	N/A
Maximum Wheel RPM	0
Maximum Shaft RPM	N/A

Temperature Notes:
Standard Construction: Arrangements 4 and 4HM are suitable to 150°F. Arrangements 1,2,8, and 9 suitable to 200°F.

Construction Notes:
Discharge flange not available for downblast position. Also available in Arrangement #4HM. WR2 value applies to aluminum wheel only.

Available Frame Size and Weights (without motor):
Frame 56-184T 85 lbs.
Arrangement #4HM 64 lbs.

Cincinnati Fan Selector - Copyright © 2006 by Cincinnati Fan and Ventilator Co. All Rights Reserved

Cincinnati Fan PB-14A 13 X 3-1/4 Radial Wheel (Full Width) @ 3,500 RPM
Rating Point: 100 ACFM @ 12.0 in. wg SP, 0.075 lb./ft.³ Density, 0.47 BHP, 6.0 in. Inlet

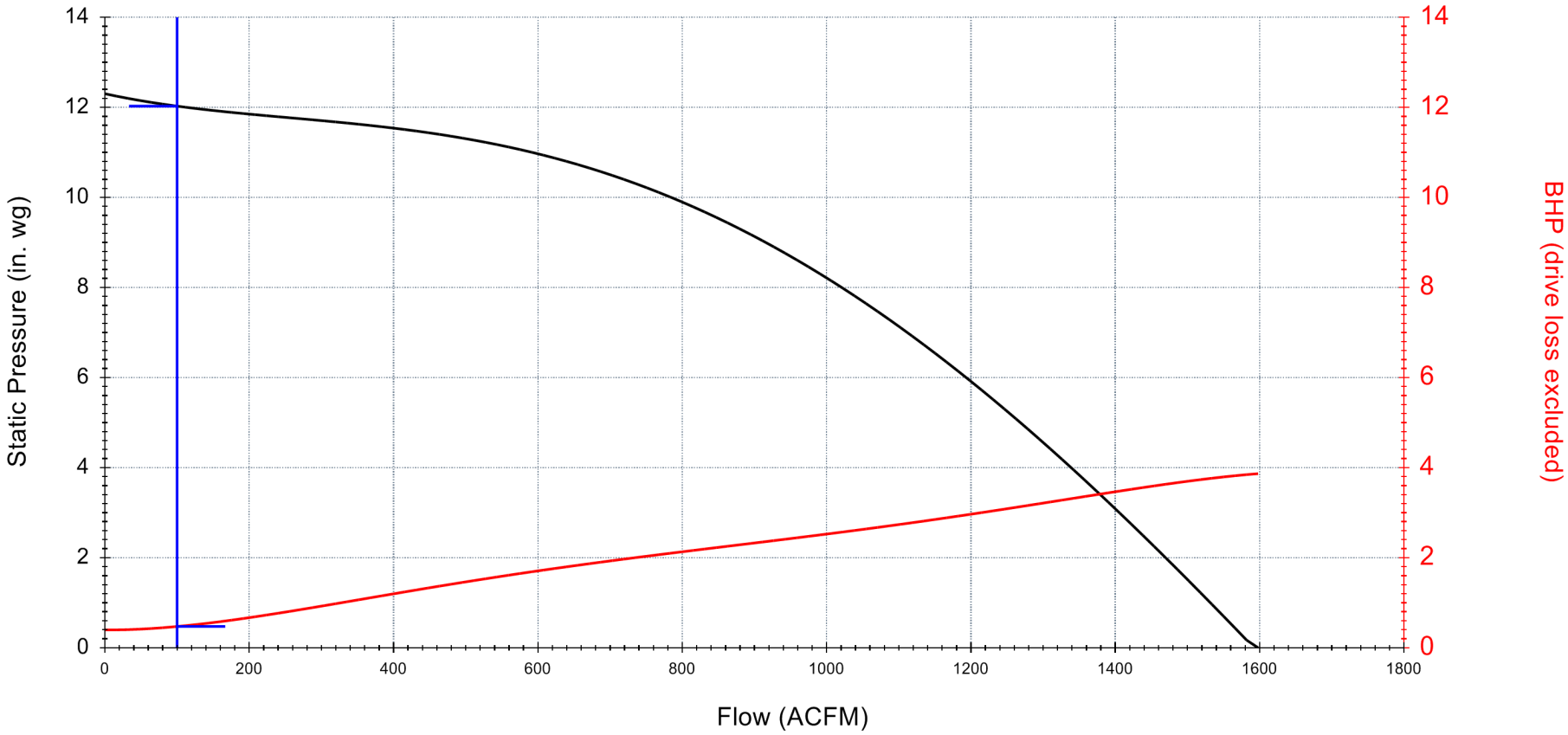

A 60031

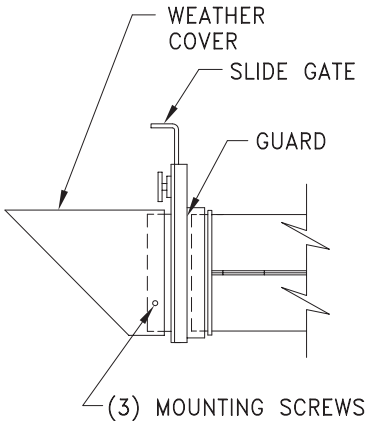

OPTIONAL WEATHER HOOD

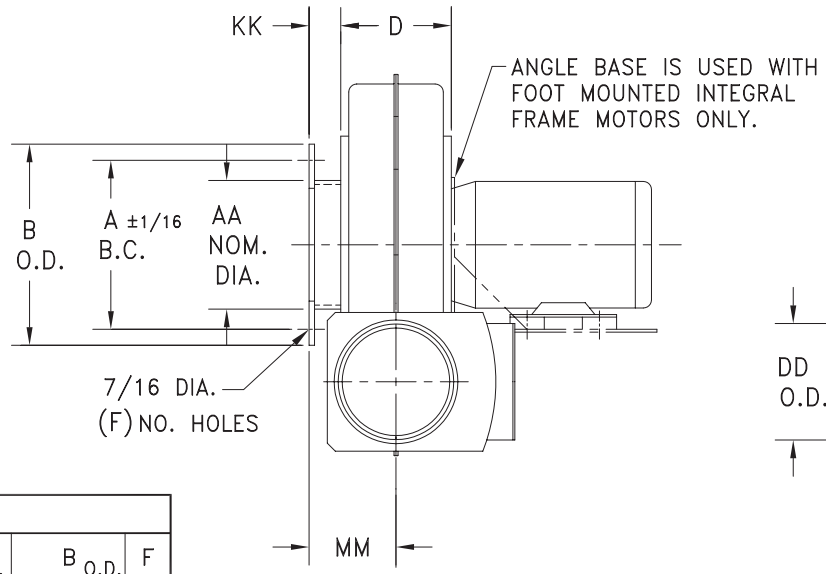

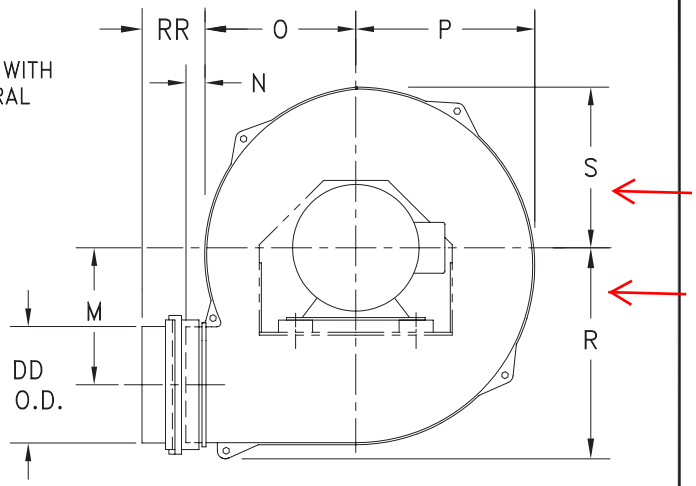

CW BOTTOM HORIZONTAL SHOWN

OPTIONAL INLET SIZES				
SIZE (AA)	MODELS	A B.C.	B O.D.	F
6	PB-14A, PB-15A, & PB-18	9-1/2	11	4
7	PB-15A	9	11	8
8	PB-14A & PB-18WA	11-3/4	13-1/2	8
10	PB-15A & PB-18	14-1/4	16	8

FLANGES SUPPLIED WITHOUT HOLES UNLESS HOLES REQUESTED:

- ☐ DRILLED – ON CENTERLINES
- ☐ DRILLED – STRADDLING CENTERLINES

		INLET FLANGE														
MODEL	SLIDE GATE	A B.C.	B O.D.	F	AA NOM. DIA.	D	M	N	O	P	R	S	DD O.D.	KK	MM	RR
PB-8	FG-4	7-1/2	9	4	4	3-3/4	4-1/8	1-1/8	4-5/8	5-5/8	7-3/16	4-7/8	4	1-5/16	3-3/16	2-13/16
PB-9	FG-4	8-1/2	11	4	5	4-1/8	5-5/8	1-3/16	6-1/8	7-3/8	8-1/2	6-5/8	4	1-3/8	3-7/16	3
PB-10A	FG-5	9-1/2	11	4	6	4-1/4	6-9/16	1	6-7/8	9-7/16	10-3/16	7-13/16	5	1-9/16	3-11/16	2-11/16
PB-12A	FG-6	9	11	8	7	5	7-9/16	7/8	8	9-5/8	11-11/16	9-7/16	6	1-9/16	4-1/16	2-11/16
PB-14A	FG-6	9	11	8	7	6	8-1/16	1	8-13/16	10-3/8	12-3/16	10-1/4	6	1-9/16	4-9/16	2-15/16
PB-15A	FG-8	11-3/4	13-1/2	8	8	7-1/4	7-7/8	1	9-13/16	11-3/8	13	10-13/16	8	1-9/16	5-3/16	2-15/16
PB-18	FG-6	11-3/4	13-1/2	8	8	6-1/4	10-1/2	15/16	10-1/2	12-11/16	14-1/2	12-7/16	6	1-9/16	4-11/16	2-3/4
PB-18WA	FG-8	14-1/4	16	8	10	8-1/16	9-7/8	7/8	11	13-3/16	15-1/8	11-13/16	8	1-9/16	5-5/8	2-13/16

cincinnati fan
7697 SNIDER ROAD MASON, OHIO 45040

TOLERANCES: ANGLES: ± 1° FRACTIONS ±1/8 ALL DIMENSIONS IN INCHES UNLESS OTHERWISE SPECIFIED

SUPERSEDES:

CERTIFIED DRAWING

TITLE PB ARR. 4HM WITH SLIDE GATE AND STANDARD INLET FLANGE

A DRAWING NO. 60031 REV. 14

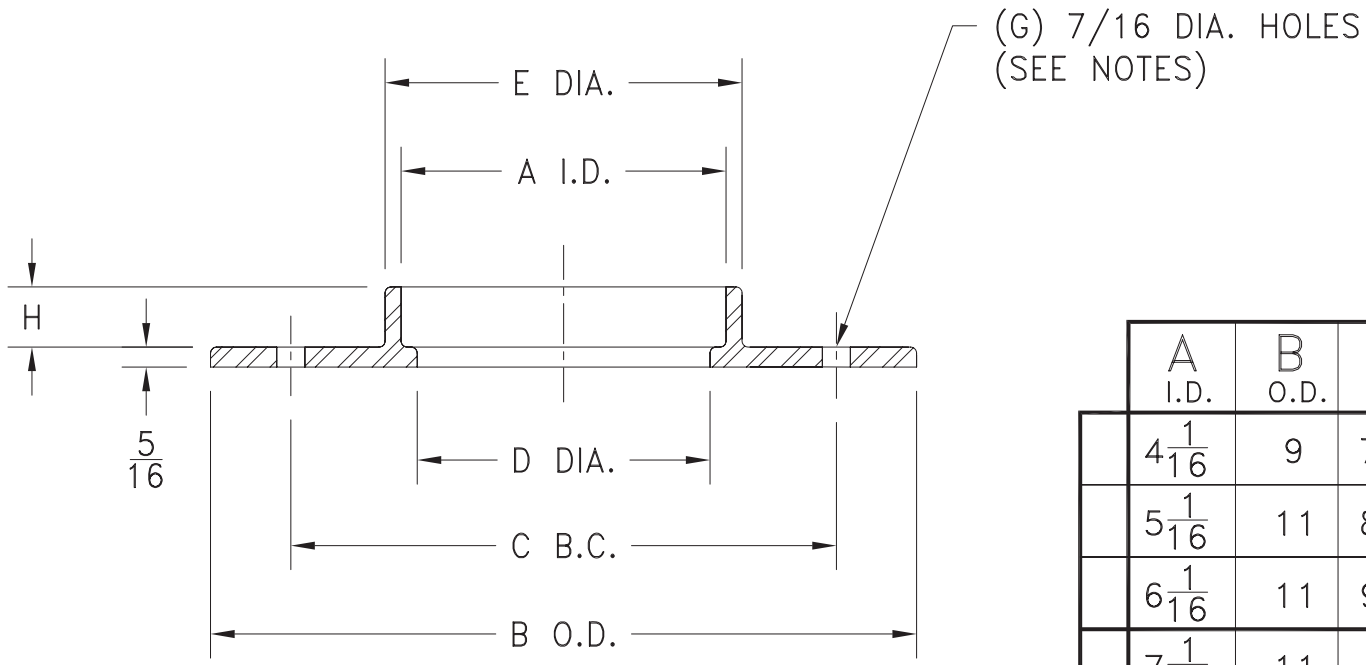

	A I.D.	B O.D.	C B.C.	D DIA.	E DIA.	H	G QTY.
	$4\frac{1}{16}$	9	$7\frac{1}{2}$	$3\frac{11}{16}$	$4\frac{9}{16}$	$\frac{15}{16}$	4
	$5\frac{1}{16}$	11	$8\frac{1}{2}$	$4\frac{9}{16}$	$5\frac{9}{16}$	$\frac{15}{16}$	4
	$6\frac{1}{16}$	11	$9\frac{1}{2}$	$5\frac{1}{2}$	$6\frac{9}{16}$	$1\frac{1}{16}$	4
	$7\frac{1}{16}$	11	9	$6\frac{7}{16}$	$7\frac{11}{16}$	$\frac{15}{16}$	8
	$8\frac{1}{16}$	$13\frac{1}{2}$	$11\frac{3}{4}$	$7\frac{1}{2}$	$8\frac{5}{8}$	1	8
	$10\frac{1}{16}$	16	$14\frac{1}{4}$	$9\frac{11}{16}$	$10\frac{9}{16}$	1	8

NOTES:

STANDARD FLANGES PROVIDED WITHOUT HOLES.

OPTIONS:

- ☐ HOLES PROVIDED, ON VERTICAL CENTERLINE (CFV STANDARD LOCATION)
- ☐ HOLES PROVIDED, STRADDLING CENTERLINE

TOLERANCES:

CAST DIMENSIONS (A, B, D, E, H) ±3/32
MACHINED DIMENSIONS (C, FLANGE HOLE DIA.) ±1/16

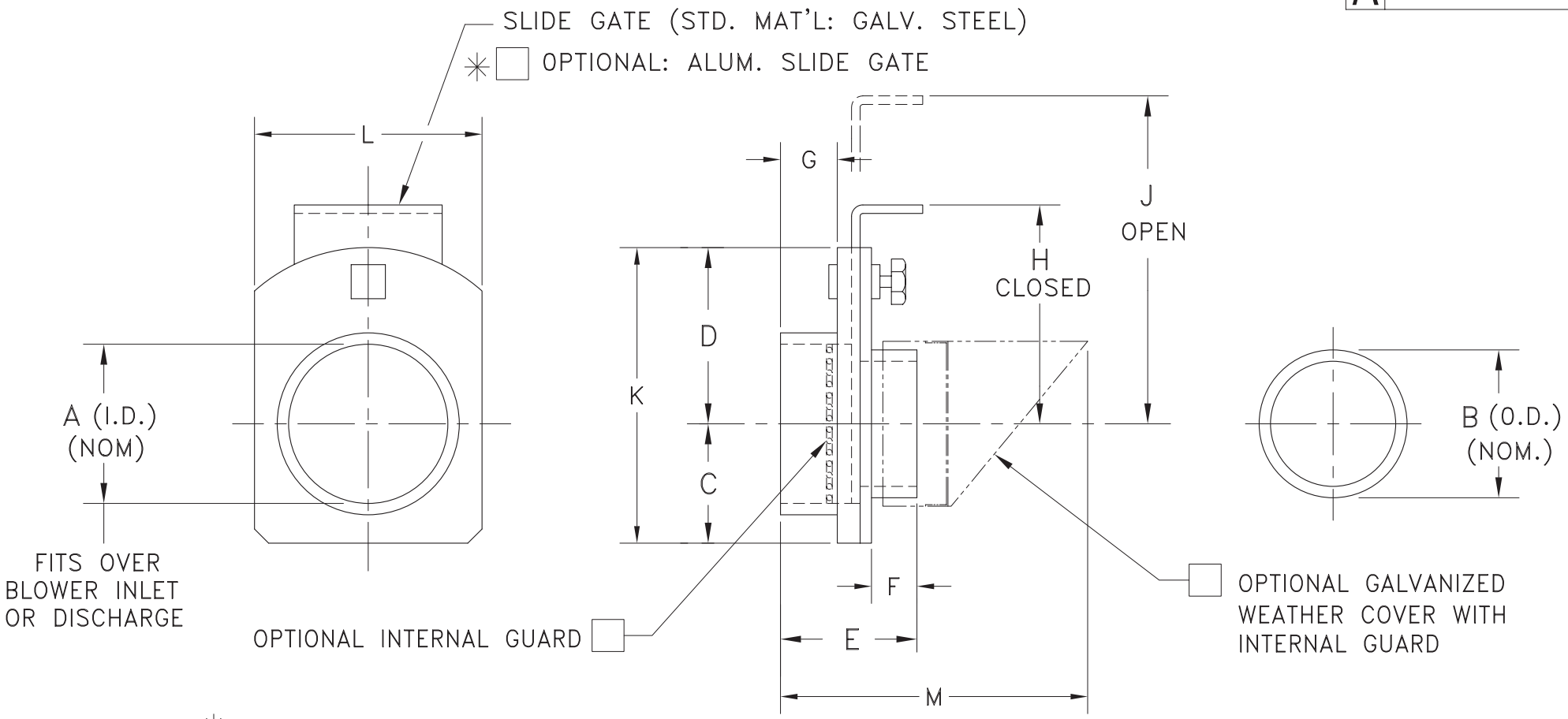

✳

MODEL	A I.D.	B O.D.	C	D	E	F	G	H	J	K	L	M
FG-4	4-1/16	3-15/16	3-1/4	4-1/2	2-11/16	1	1-1/16	5-5/8	9	7-3/4	6	7-3/8
FG-5	5-1/16	4-15/16	3-1/2	5-1/2	2-9/16	1-3/32	7/8	6-1/8	10-1/2	9	7	8-1/4
FG-6	6-1/16	5-15/16	4	5-1/2	2-11/16	1-1/16	1	6-1/4	11-1/2	9-1/2	8	9-1/4
FG-7	7-1/16	6-15/16	4-1/2	5-1/2	2-7/8	1-1/8	1-1/8	6-1/4	12-1/2	10	9	10-1/2
FG-8	8-1/16	7-15/16	5	6-3/4	2-13/16	1	1-3/16	7-3/4	15	11-3/4	10	11-9/16
FG-10	10-1/16	9-15/16	6	8	3-1/16	1-5/16	1	9	18-1/2	14	12	13-1/2

✳ WITH ALUM. SLIDE GATE, ADD "A" SUFFIX TO MODEL NO.

cincinnati fan
7697 SNIDER ROAD MASON, OHIO 45040

TOLERANCES:
ANGLES: ± 1°
FRACTIONS ±1/8

ALL DIMENSIONS IN INCHES UNLESS OTHERWISE SPECIFIED

SUPERSEDES:

CERTIFIED DRAWING

TITLE
FG ALUMINUM SLIDE GATE DAMPER

A

DRAWING NO.
FGSGD

REV.
1

Ref.: SIEMENS WATER TECH. CORP.

DESIGN DATA

Nominal Size	6"
1. Pressure, Psig.	
Design	± 3
Operating	N/A
Test	N/A
2. Temperature, F°.	
Design	220
Operating	N/A
3. Maximum Movements, In.	
Axial Compression	0.75
Axial Extension	0.25
Lateral Offset	0.50
Angular Rotation	2
4. Face to Face	6.00
5. Drilling	150#
OD	11.00
BC	9.50
No. of BH	8
ø of BH	0.875
6. Quantity.	5
7. Media.	N/A

REVISION

REV	DESCRIPTION	DATE	REV BY
1	ISSUE	09/24/13	S. LEAL

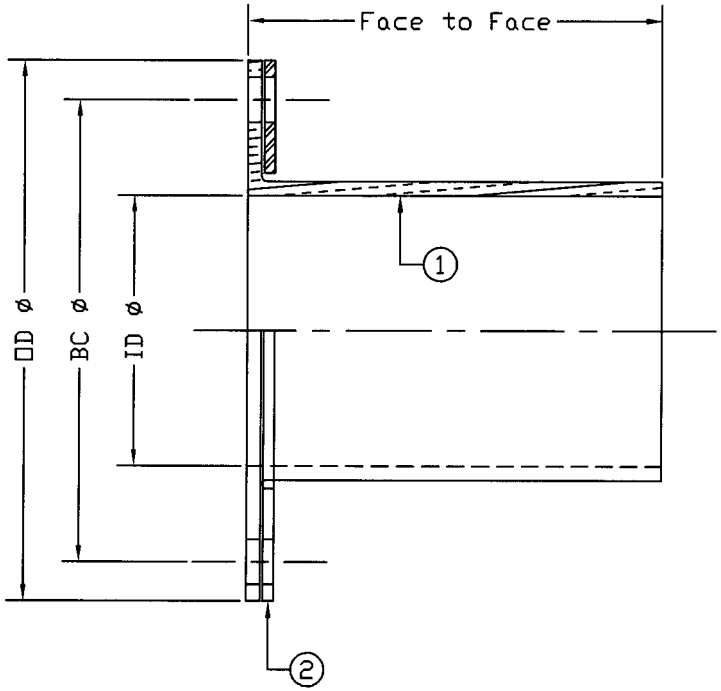

APPROVED FOR MANUFACTURING

COMPANY: _____

SIGNED BY: _____

DATE: _____

Notes:
1. Designed and tolerances in accordance with fluid sealing association technical handbook sixth edition.
2. All piping must be properly anchored and guided in accordance with ANSI B31.1 standard
3. All dimension are in inches unless noted different.
4. Unaflex terms, conditions and warranty shall apply.

ITEM	QTY.	DESCRIPTION
2	1	Carbon steel retaining rings, 1/4" thick, 150# drill.
1	1	NEOPRENE tube and cover, POLYESTER reinforcement.

INFORMATION CONTAINED IN THIS DRAWING IS PROPIETARY TO UNAFLEX INC. DISCLOSURE OR USE IS EXPRESSLY PROHIBITED UNLESS AGREED IN WRITING BY UNAFLEX INC.

TITLE: Style 600 E. Joint Flange By Sleeve 150# Drill.

BY.: S.Cabrera | CHK.:

DATE: 09/24/13 | DATE:

Combustion Kinetics
Phone: 314-965-5858
Fax: 314-965-5785
E-Mail: ckc1@concentric.net
11815 Manchester Road
St. Louis, MO 63131

DWG NO.: Q-270235-1 | REV 1

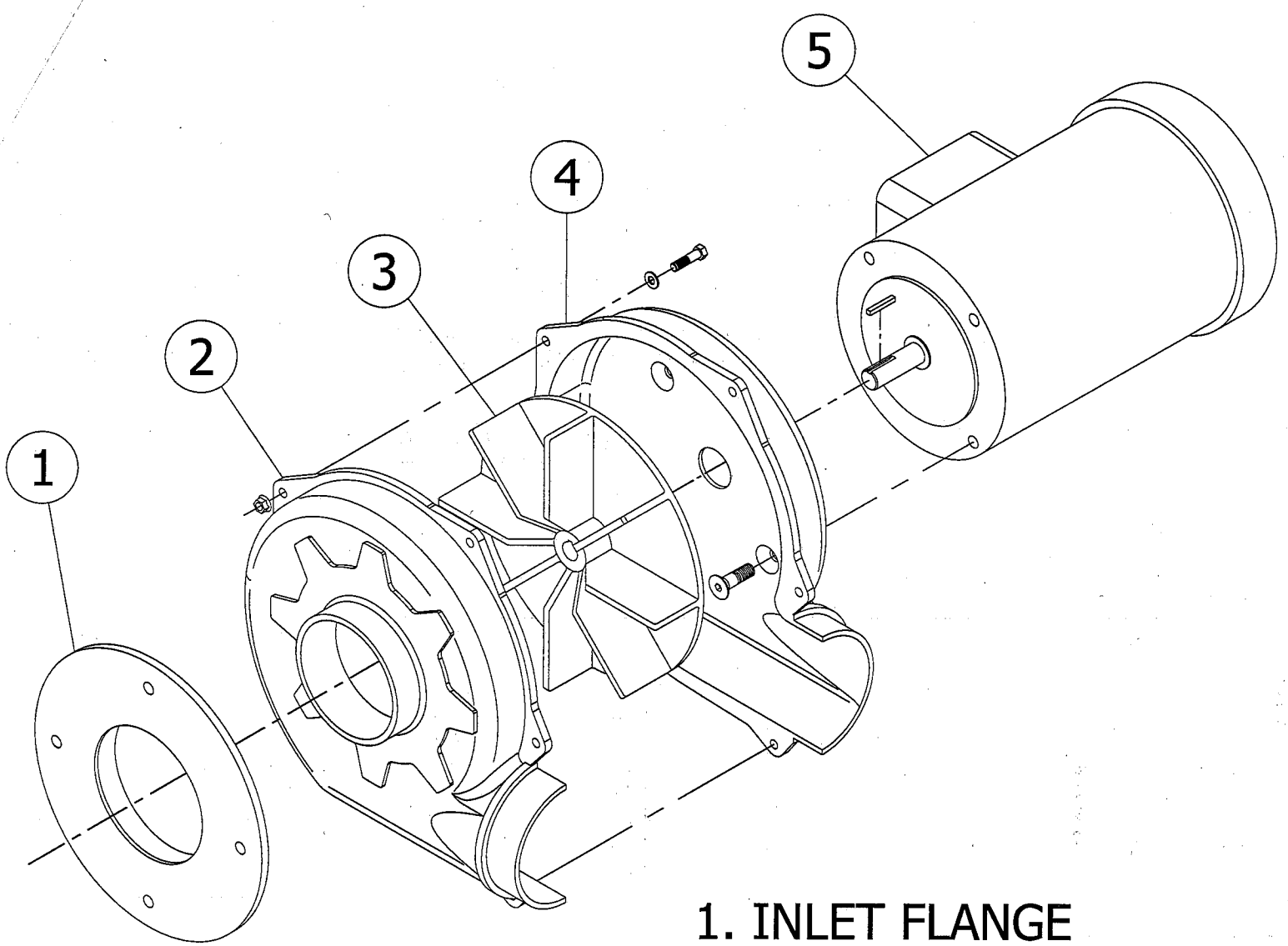

1. INLET FLANGE
2. INLET-SIDE HOUSING
3. BLOWER WHEEL
4. DRIVE-SIDE HOUSING
5. MOTOR

PB 2-PIECE ARRANGEMENT 4HM ASSEMBLY C-FACE MOTOR (PB-8 TO PB-12A)

The drawing shown above is a representation of the basic model blower or fan purchased on the serial number shown on page 1. It does not include any optional or accessory parts or any special construction features that might have been supplied with the original order.

AMCA Publication 410

RECOMMENDED SAFETY PRACTICES

for Users and Installers of Industrial and Commercial Fans

AIR MOVEMENT AND CONTROL ASSOCIATION INTERNATIONAL, INC.

30 West University Drive
Arlington Heights, IL 60004-1893 U.S.A.

Tel: (847) 394-0150 • http://www.amca.org
Fax: (847) 253-0088 • info@amca.org

FOREWORD

i. This publication has been prepared by the Air Movement Division of the Air Movement and Control Association International, Inc. (AMCA International). The information contained in this publication has been derived from many sources. The suggestions made necessarily should be general in their meaning and cannot be applied literally to all specific situations or conditions.

ii. The safe installation and operation of fans is the responsibility of the system designer, installer, maintainer, and user.

From the initial system design through the life of the equipment, safety should be a foremost consideration. Some areas which require some special attention include system design, layout and construction, fan performance specification, foundation and installation details, storage procedures, start-up and commissioning procedures, operation, maintenance, and repair. Specific safety requirements are mandated by federal, state, and local codes. *Recommended Safety Practices for Users and Installers of Industrial and Commercial Fans* is published by AMCA International for assistance. System designers, installers, maintainers, and users should consult and properly comply with all applicable codes and guidelines.

iii. The safety recommendations contained herein are intended to assist designers, installers, maintainers, or other users of air moving devices in the safe operation and use of the devices mentioned. These recommendations do not represent the only methods, procedures, or devices appropriate for the situations discussed. Caution should be used at all times when working in or around moving parts.

iv. AMCA International disclaims any and all warranties, expressed or implied, regarding the products sold by the manufacturer with which this booklet has been provided. Further, AMCA International recommends that competent personnel be consulted in deciding what is the preferred or recommended safety procedure in a particular instance where the guidelines contained in this booklet are unclear or in any way incomplete.

v. AMCA International has offered the information within this booklet to assist in the safe operation, maintenance, and use of the products sold by members of AMCA International. In so doing, AMCA International does not assume any legal duties of the designer or manufacturer to instruct or warn about their product. AMCA International expressly disclaims liability for any injury or damage arising out of the operation or use of the product or the guidelines contained herein.

vi. These recommended safety practices were adopted by the AMCA International membership on April 28, 1996.

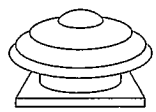

Power Roof Ventilator

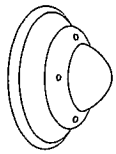

Wall Exhauster

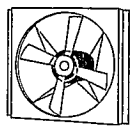

Propeller Fan

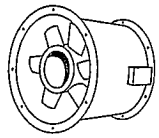

Axial Fan

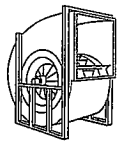

Centrifugal Fan

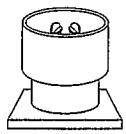

Upblast Roof Exhauster

1. Introduction

1.1 Fans and other air moving devices are made in a wide variety of types, sizes, and arrangements. This guide addresses the proper use and installation of industrial and commercial fans. It is not intended to address residential and consumer fans.

1.2 Various "size" factors are important when assessing potential for injury; some factors include: diameter of impeller (wheel, rotor, propeller), rotational inertia, voltage, and current.

1.3 This guide is intended to assist in the safe installation of air moving equipment and to warn operating and maintenance personnel of the commonly recognized hazards associated with this equipment.

1.4 **Handling and installation should always be performed only by experienced and trained personnel who are aware of the hazards associated with rotating equipment. Failure to comply with these practices may result in death or serious bodily injury.** In addition to following the manufacturer's installation instructions, care should be taken to ensure compliance with specific safety requirements mandated by federal, state, and local codes. Industry safety standards and practices published by AMCA International and by other recognized agencies and associations should be consulted and followed where applicable.

2. Personnel Safety Accessories

2.1 General

Protective devices are incorporated as standard construction on some types of fans but on many fans, these devices are offered as optional accessories. This is done because the need for the devices and the design required will frequently depend upon the type of system, fan location, and operating procedures being employed. Proper protective safety devices; company safety standards; specific safety requirements mandated by federal, state, and local codes; and industry safety standards and practices published by AMCA International and by other recognized agencies and associations should be determined by the user, who should specify and obtain the appropriate devices from the fan manufacturer or others, and should not allow operation of the equipment without them. Examples of available devices include the following:

2.2 Fan Guards

2.2.1 All fans have moving parts which require guarding in the same way as other moving machinery. Fans located less than seven (7) feet above the floor require special consideration. Specific safety requirements should comply with mandated federal, state, and local codes; and industry safety standards and practices published by AMCA International and

© 2009, Air Movement and Control Association, International

by other recognized agencies and associations should be followed.

2.2.2 Roof-mounted fans and other fans which are not generally accessible may not require safety guards which might otherwise be appropriate. Where accessibility to these fans is occasional or infrequent, the expense of permanent guarding may be reduced through the use of lockout switches and suitable warnings. In such cases, maintenance personnel should engage the lockout switch before undertaking any maintenance or repairs. As is the case with other machinery involving moving parts, common sense and caution will preserve personal safety.

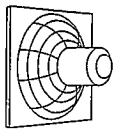

Industrial Type Guard for Propeller Fan

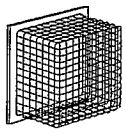

Maximum Safety Guard for Propeller Fan

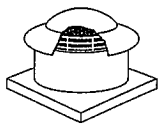

Screen on Roof Ventilator

2.3 Inlet and Outlet Guards

Axial and centrifugal fans are often connected directly to ductwork which will prevent contact with the internal moving parts; when an exposed inlet or outlet represents a hazard, a suitable guard should be installed.

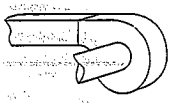

Centrifugal Fan Protected by Ductwork

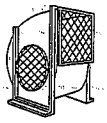

Inlet or Outlet Guard on Centrifugal Fan

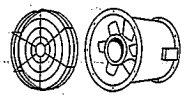

Guard for Axial Fan with Non-Ducted Inlet or Outlet

2.4 Drive Guards

2.4.1 Fans may be driven directly from the motor shaft or through a belt drive. Where the bearing assembly, rotating shaft, sheaves, or belts are exposed, a suitable guard may need to be provided. Some example guards are shown below.

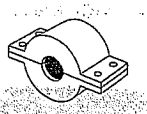

Drive Coupling Guard

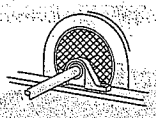

Heat Slinger Guard (shaft and bearing guard omitted for clarity)

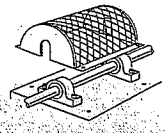

Shaft and Bearing Guard

2.4.2 Drive guards may be required for tubular centrifugal or axial fans to cover the exposed drive sheave and belts outside the fan housing.

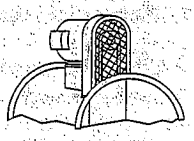

Drive Guard - Axial Fan

2.4.3 A typical centrifugal fan drive guard may vary with the arrangement. Safety guards should be used when drive systems are accessible to personnel. In restricted areas, omission of the back cover may be acceptable.

2.4.4 Dampers and their linkage may operate suddenly without warning at high speeds. Dampers and their linkage contain pinch points which should be identified and guarded.

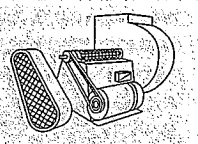

Drive Guard - Centrifugal Fan

3. Hidden Dangers

3.1 General

In addition to the obvious hazards associated with the moving parts of rotating machinery, fans present additional potential hazards that are not so obvious and should be considered by the system designer and user for safe operation.

3.2 Suction and Pressure

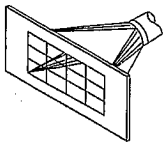

Special Purpose Intake Screen

3.2.1 Fans operate by creating suction and air pressure which can be hazardous. Solid objects can be drawn into a fan's inlet and then become dangerous projectiles when they are exhausted through the fan's outlet. **Solid objects can also cause fan failure or impeller failure due to imbalance or damage to the impeller blades.** Personnel in close proximity to a fan inlet can be overcome by the suction, and drawn into the fan.

3.2.2 Whenever there is a possibility that solid objects can be drawn into a remote intake, the intake should be guarded at all times. Before a guard is removed, the fan should be disconnected and the power supply locked out.

3.2.3 Where fans are installed over an occupied area, safety guards should be provided to prevent dropped objects from entering this area during installation and maintenance.

3.2.4 Access doors to a fan or duct system should never be opened while the fan is operating or coasting to a stop. On the downstream (or pressure) side of the system, releasing the door with the system in operation may result in an explosive opening. On the upstream (or suction) side, the inflow may be sufficient to draw in tools, clothing, and other materials. The power supply should always be locked out prior to accessing a fan or ductwork.

3.2.5 Fan design sometimes requires access doors to be supplied with internal components such as a plug to fill a hole in the fan casing. These doors can often be heavy and difficult to handle. Care should be exercised when opening, removing, and installing these components.

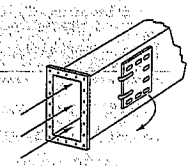

Bolted Access Door in Duct

3.3 Windmilling

Even when the power supply is locked out, fans may cause injury or damage if the impeller is subject to "windmilling" which is the turning of the impeller and drive components due to a draft in the system. To guard against this hazard, the impeller should be secured to physically restrict rotational movement.

3.4 Temperature

Many fans, fan motors, and fan components run at temperatures that could burn someone who comes in contact with the hot areas, including discharged or leaking gases. If this potential hazard is present, steps should be taken so that personnel working near the fan are aware of the danger and can exercise caution.

3.5 Fan Noise and Environment

Some fans can generate sound that could be hazardous to exposed personnel. Sound pressure can be measured in the field, but obtaining accurate data is difficult. The environment in which the fan operates can impact the ability to obtain accurate fan sound readings. Consult the manufacturer for fan sound data. It is the responsibility of the system designer, installer, user, and maintainer to comply with specific safety requirements mandated by federal, state, and local codes; and to follow industry safety standards and practices published by AMCA International and by other recognized agencies and associations, regarding personnel safety from exposure to fan noise associated with use and exposure to equipment.

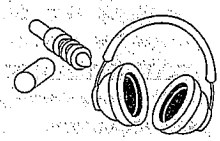

Hearing Protection

3.6 Stroboscopic Effect

The stroboscopic effect of certain lights in combination with certain fan speeds may cause a rotating assembly to appear stopped. In these cases, irregular markings can be placed on the moving parts to prevent this type of effect. Personnel should be warned that the fan may be in motion even if it appears not to be.

3.7 Special Purpose Fans and Systems

The hidden dangers associated with Special Purpose Fans used in special systems are covered in Section 6.

4. Power Isolation

4.1 Every fan should be installed with a suitable device allowing it to be completely disconnected or isolated from the power supply.

4.2 Many fans are started by remote switches or push-buttons, by interlocks with other equipment, or by automatic controls. Before performing any maintenance, inspection, or other activity which will require removal of guards, ductwork, access doors, etc., or exposure of moving parts, the fan power supply should be locked out and the fan tagged out of service.

4.3 In some installations other equipment, such as gas burners, may be interlocked with the fan so that disconnecting the fan will automatically shut off the burner or other device. Maintenance on systems of this type should be performed only under the supervision of competent engineering personnel and in accordance with applicable codes and standards.

Remote Switch

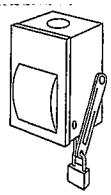

Disconnect Switch

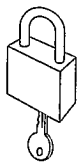

Lock Carried by Maintenance Personnel

4.4 In cases where the fan is power driven by a source other than an electric motor, appropriate provisions should be made for the isolation or disengagement of the power supply.

5. Start-Up Checklist

5.1 General

5.1.1 Before putting any fan into initial operation, the manufacturer's instructions should be followed. Transportation, handling, and installation can cause fasteners to loosen, and cause misalignment of fan components. Carefully follow this check list when commissioning equipment.

5.1.2 Lock out the primary and all secondary power sources.

5.1.3 A complete inspection should be made of all of the ductwork and the interior of the fan. Make certain there is no foreign material which can be drawn into or blown through the fan or ductwork. Appropriate protective measures and safety practices should be observed when entering or working within these areas. These measures might include the use of goggles, respirators, or other personal protective devices.

5.1.4 Make sure the foundation or mounting arrangement and the duct connections are adequately designed and installed per drawings and in accordance with recognized acceptable engineering practices and with the fan manufacturer's recommendations.

5.1.5 Check and tighten all bolts, fasteners, and set screws as necessary.

5.1.6 Check the fan assembly and bearings for proper grounding to prevent static electricity discharge.

5.1.7 Ensure power and drive components such as motor starter, variable frequency drive, or hydraulic power unit are properly sized, matched, and connected to the fan.

5.1.8 Check bearings for recommended lubricant and lubrication amount.

5.1.9 Spin the rotating assembly to determine whether it rotates freely, without hitting anything, and is not grossly out of balance.

5.1.10 Inspect impeller for proper rotation for the fan design.

5.1.11 Check alignment of drives and all other components.

5.1.12 Check the belt drive for proper sheave selection and installation and make sure the sheaves are not reversed (excessive speeds could develop).

5.1.13 Check for recommended belt tension.

5.1.14 Properly secure all safety guards.

5.1.15 Assure that all appropriate warnings have been put in place.

5.1.16 Secure all access doors to the fan and ductwork.

5.1.17 Momentarily energize the fan to check the direction of rotation. Listen as the fan coasts to a stop for any unusual noise, identify the source, and take corrective action as necessary.

5.1.18 Switch on the electrical supply and allow the fan to reach full speed. Check carefully for:

(1) Excessive vibration

(2) Unusual noise

(3) Proper belt alignment

(4) Proper lubrication

(5) Proper amperage, voltage, or power values.

(6) If any problem is indicated, SWITCH OFF IMMEDIATELY.

(7) Lock out the power supply. Secure the fan impeller if there is a potential for windmilling. Check carefully for the cause of the trouble, correct as necessary, and repeat check list procedure.

5.2 Even if the fan appears to be operating satisfactorily, shut down after a brief period, lock out the power supply, and recheck items 5.1.5 through 5.1.17 as the initial start-up may have loosened the bolts, fasteners, and set screws.

5.3 The fan may now be put into operation, but during the first eight hours of running, it should be closely observed and checked for excessive vibration and noise. At this time checks should also be made of motor input current and motor and bearing temperatures to ensure that they do not exceed manufacturer's recommendations.

5.4 After eight (8) hours of operation, the fan should be shut down and the power locked out. Check list items 5.1.5 through 5.1.17 should be inspected and adjusted, if necessary.

5.5 After twenty-four (24) hours of satisfactory operation, the fan should be shut down (locked out) and the drive belt tension should be readjusted to recommended tension.

5.6 After commissioning and start-up, the fan should be operated and maintained in accordance with the manufacturer's and component manufacturer's recommendations. Some basic guidelines for Warning Signs and Routine Maintenance are included in Sections 7 and 8. These sections are meant as a supplement to the manufacturer's instructions and are not intended to replace the manufacturer's instructions.

6. Special Purpose Fans

6.1 Most fans are designed to handle clean air at standard temperatures between 32 °F and 120 °F. These fans should not be placed in systems or used for other than their design intended use. Special Purpose Fans are designed for use in systems that may include extreme temperatures, explosive, toxic, or special gases, material handling, corrosive environments, or other special hazards which should be carefully considered. Specific safety requirements should comply with mandated federal, state, and local codes, and industry safety standards and practices published by AMCA International and by other recognized agencies and associations should be followed.

6.2 Where the system will handle explosive or flammable material (dust, fumes, gases), fans of spark-resistant construction should be used.

6.3 Fans connected by ductwork or other piping may contain gases other than air which are hazardous. In these cases, procedures should be established to prevent exposure of personnel working on or near the fan, and by maintenance personnel who may need to enter the fan. Appropriate personal protective equipment as determined by the material safety data sheet, and system operators should be utilized. Appropriate environmental protective measures should also be taken.

6.4 Fan inlet boxes, housings, ductwork, and other system components which are large enough to permit entry should be considered confined spaces. System areas may also serve as low points where heavy gases, liquids, or other substances may accumulate and present explosive, fire, health, or suffocation hazards. Appropriate protective measures and safety practices should be observed when entering or working within these areas.

6.5 Material-handling fans are specially designed to allow the fan to handle a specific type of material without excessive accumulation of material on the fan impeller. Fans handling corrosive gases or erosive material should be checked periodically. If loss of material is evident, the fan should be shut down, power supply locked out, and tagged out of service. The manufacturer or other qualified personnel should be consulted to determine if the fan is within safety limits for operation. To ensure satisfactory operation it is essential to observe the manufacturer's limitations concerning the type of material to be handled by the fan.

6.6 Fan ratings and maximum speed limits are typically based on the use of air at 70 °F. At temperatures above the normal range (specified by the manufacturer), a reduction should be made in the maximum speed limit. Information on this reduction and on other precautions to be taken for high temperature applications should be obtained from the fan manufacturer. Personnel working near high temperature fans should be aware that coming in contact with the fan's housing, ductwork, or handled gases could result in serious burns. Where the danger of burns is not apparent, appropriate warnings should be posted. Appropriate protective apparel should be worn whenever working in close contact with heated housings or ductwork.

6.7 Corrosive contaminants can be formed when moisture combines with an active airborne chemical. Fans subjected to corrosive contaminants will corrode; however, suitable protective coatings or material, if used in the fan construction, can delay corrosion. Protected fans should be regularly inspected to ensure that the protection remains effective. Personnel working in environments with airborne chemicals may require personal protective apparel equipment.

6.8 Where liquid can accumulate within the fan, provide for the installation of adequately sized drains.

6.9 In those applications where there is a potential for chemical build-up (such as grease, creosote, etc.), periodic cleaning and proper drainage are necessary to avoid a fire hazard.

7. Warning Signs

7.1 General

7.1.1 A change in the operating characteristics of a fan may indicate the need for maintenance. Sudden changes may indicate severe problems or dangerous conditions developing. Investigate any changes in the operational characteristics or unusual symptoms of the fan. Refer to AMCA Publication 202, Troubleshooting, for a more detailed explanation of investigating procedures. Consult your manufacturer or other qualified consultant with questions concerning changes observed.

7.2 Excessive Vibration

7.2.1 Operational vibration levels are one of the best indicators of the condition of the blower. Careful observation and monitoring of vibration levels can detect a minor problem in the early stages of development when correction is less costly and easier. Recommended maximum vibration levels should be obtained from the equipment manufacturer.

7.2.2 If excessive vibration is observed, stop the fan and lock it out until the cause is corrected. Check for material build-up on the impeller. Generally this will show up as material flaking off the fan impeller and causing an imbalance which may lead to catastrophic failure of the fan or its components. Excessive vibration can also be caused by looseness in the drive train, loose fasteners, misalignment or impeller damage. Contact the fan manufacturer or other qualified consultant to determine the maximum vibration level if it is not included in maintenance instructions.

7.3 Noise

Changes to the sound level may indicate maintenance is needed. Some unusual noises often heard include: bearing noise indicating the bearings need lubricant or replacement; scraping or ticking noise indicating the rotating parts are hitting the stationary parts; squealing indicating the belt drive needs tensioning; repeated changing pitch of the blower indicating operation of the blower at too low a flow. If any of these noises or any other unusual noises are detected, their cause should be determined and corrective action taken as necessary.

7.4 High Motor Temperatures

Check that cooling air to the motor has not been diverted or blocked by dirty guards or similar obstacles. Check the input amperage. An increase in amperage may indicate that some major change has occurred in the system.

7.5 High Bearing Temperatures

This condition is usually caused by improper lubrication; this can be either "over," "under," or "unsuitable" lubrication. In every case, if the cause of the trouble is not easily seen, experienced personnel should examine the equipment before it is put back in operation.

7.6 Poor Performance

Too much flow or pressure or too little flow or pressure is often a symptom of a change in the operating system. A fan will typically operate at the same performance in a static system some typical causes include: operating of the fan backwards after maintenance procedures; filters dirty or not in place; change or blockage in the ductwork; change in speed of the fan (switching the sheaves); loss or failure of the impeller. All of these causes and many others will affect the flow and pressure produced by the fan.

8. Routine Maintenance

8.1 A preventive maintenance program is an important aspect of an effective safety program. Consult your manufacturer or other qualified consultant with questions concerning changes observed during periodic inspections and routine maintenance.

8.2 The fan manufacturer's operating and maintenance recommendations, as well as the components manufacturer's instructions (such as motor, bearing, drives, etc.) should be strictly followed.

8.3 Maintenance should always be performed by experienced and trained personnel who are aware of the hazards associated with rotating equipment. Do not attempt any maintenance on a fan unless the fan power supply has been locked out and tagged out and the impeller has been secured.

8.4 When performing maintenance functions which include disassembly of the fan, careful consideration should be given to the size, weight, center of gravity, and lifting means of the fan components. It should also be noted that the outboard bearing on some fans such as arrangements 1, 8, 9, and 10 is often cap-loaded. Removal of the securing means may result in a sudden change in impeller position.

8.5 Historical data is often the best indicator for determining the operational condition of the fan. Maintenance logs which include relubrication, vibration levels, temperature levels, power requirements, inspection, and other pertinent records should be maintained and consulted as necessary when assessing the condition of the fan.

8.6 Under normal circumstances, handling clean air, the system should require cleaning only once a year. However, the fan and system should be checked at regular intervals to detect any unusual accumulation.

8.7 The fan impeller should be specially checked for build-up of material or dirt which may cause an imbalance with resulting undue wear on bearings and belt drives. A regular maintenance program should be established as needed to prevent material build-up.

8.8 Periodic inspection of the rotating assembly should be made to detect any indication of weakening of the rotor because of corrosion, erosion, or metal fatigue. Where signs of deterioration are found, lock out and tag out the impeller until the unit has been inspected and approved by a qualified consultant.

CELL682 Wireless Alarms

SENSAPHONE®
REMOTE MONITORING SOLUTIONS

Sensaphone CELL682 Users Manual

Version 1.4

LIT-0171

CELL682 Wireless Alarms

SENSAPHONE®
REMOTE MONITORING SOLUTIONS

USER'S MANUAL

VERSION 1.4

SENSAPHONE®
REMOTE MONITORING SOLUTIONS

Every effort has been made to ensure that the information in this document is complete, accurate and up-to-date. Sensaphone assumes no responsibility for the results of errors beyond its control. Sensaphone also cannot guarantee that changes in equipment made by other manufacturers, and referred to in this manual, will not affect the applicability of the information in this manual.

Copyright © 2010 Sensaphone

First Edition, version 1.4, April 2013

Written and produced by Sensaphone

Please address comments on this publication to:

Sensaphone

901 Tryens Road

Aston, PA 19014

Sensaphone is a registered trademark of Sensaphone.

IMPORTANT SAFETY INSTRUCTIONS

Your Cell682 has been carefully designed to give you years of safe, reliable performance. As with all electrical equipment, however, there are a few basic precautions you should take to avoid hurting yourself or damaging the unit:

• Read the installation and operating instructions in this manual carefully. Be sure to save it for future reference.

• Read and follow all warning and instruction labels on the product itself.

• To protect the Cell682 from overheating, make sure all openings on the unit are not blocked. Do not place on or near a heat source, such as a radiator or heat register.

• Do not use your Cell682 near water, or spill liquid of any kind into it.

• Be certain that your power source matches the rating listed on the AC power transformer. If you're not sure of the type of power supply to your facility, consult your dealer or local power company.

• Do not allow anything to rest on the power cord. Do not locate this product where the cord will be abused by persons walking on it.

• Do not overload wall outlets and extension cords, as this can result in the risk of fire or electric shock.

• Never push objects of any kind into this product through ventilation holes as they may touch dangerous voltage points or short out parts that could result in a risk of fire or electric shock.

• To reduce the risk of electric shock, do not disassemble this product, but return it to Sensaphone Customer Service or another approved repair facility when any service or repair work is required. Opening or removing covers may expose you to dangerous voltages or other risks. Incorrect reassembly can cause electric shock when the unit is subsequently used.

• If anything happens that indicates that your Cell682 is not working properly or has been damaged, unplug it immediately and follow the procedures in the manual for having it serviced. Return the unit for servicing under the following conditions:

1. The power cord or plug is frayed or damaged.
2. Liquid has been spilled into the product or it has been exposed to water.
3. The unit has been dropped, or the enclosure is damaged.
4. The unit doesn't function normally when you're following the operating instructions.

CAUTION: To reduce the risk of fire or injury to persons, read and follow these instructions:

1. Replace the battery only with the same or equivalent type recommended by the manufacturer.
2. Do not dispose of the battery in a fire. The cell may explode. Check with local codes for possible special disposal instructions.
3. Do not open or mutilate the battery. Released electrolyte is corrosive and may cause damage to the eyes or skin. It may be toxic if swallowed.
4. Exercise care in handling battery in order not to short the battery with conducting materials such as rings, bracelets, and keys. The battery or conductor may overheat and cause burns.

FCC REQUIREMENTS

This equipment has been tested and found to comply with the limits for a Class B digital device, pursuant to Part 15 of the FCC rules. These limits are designed to provide reasonable protection against harmful interference in a residential installation. This equipment generates, uses and can radiate radio frequency energy, and if not installed and used in accordance with the instructions, may cause harmful interference to radio communications. However, there is no guarantee that interference will not occur in a particular installation. If this equipment does cause harmful interference to radio or television reception, which can be determined by turning the equipment off and on, the user is encouraged to try to correct the interference by one or more of the following measures:

- Reorient or relocate the receiving antenna.
- Increase the separation between the equipment and the receiver.
- Connect the equipment into an outlet on a circuit different from that to which the receiver is connected.
- Consult the dealer or an experienced radio/TV technician help.

This device complies with Part 15 of the FCC Rules. Operation is subject to the following two conditions: 1) this device may not cause harmful interference, and 2) this device must accept any interference received, including interference that may cause undesired operation.

If you experience trouble with the Cell682, or you need information on obtaining service or repairs, please contact:

Sensaphone
901 Tryens Road
Aston, PA 19014
Phone: 610.558.2700
FAX: 610.558.0222

2 YEAR LIMITED WARRANTY

PLEASE READ THIS WARRANTY CAREFULLY BEFORE USING THE PRODUCT.

THIS LIMITED WARRANTY CONTAINS SENSAPHONE'S STANDARD TERMS AND CONDITIONS. WHERE PERMITTED BY THE APPLICABLE LAW, BY KEEPING YOUR SENSAPHONE PRODUCT BEYOND THIRTY (30) DAYS AFTER THE DATE OF DELIVERY, YOU FULLY ACCEPT THE TERMS AND CONDITIONS SET FORTH IN THIS LIMITED WARRANTY.

IN ADDITION, WHERE PERMITTED BY THE APPLICABLE LAW, YOUR INSTALLATION AND/OR USE OF THE PRODUCT CONSTITUTES FULL ACCEPTANCE OF THE TERMS AND CONDITIONS OF THIS LIMITED WARRANTY (HEREINAFTER REFERRED TO AS "LIMITED WARRANTY OR WARRANTY"). IF YOU DO NOT AGREE TO THE TERMS AND CONDITIONS THIS WARRANTY, INCLUDING ANY LIMITATIONS OF WARRANTY, INDEMNIFICATION TERMS OR LIMITATION OF LIABILITY, THEN YOU SHOULD NOT USE THE PRODUCT AND SHOULD RETURN IT TO THE SELLER FOR A REFUND OF THE PURCHASE PRICE. THE LAW MAY VARY BY JURISDICTION AS TO THE APPLICABILITY OF YOUR INSTALLATION OR USE ACTUALLY CONSTITUTING ACCEPTANCE OF THE TERMS AND CONDITIONS HEREIN AND AS TO THE APPLICABILITY OF ANY LIMITATION OF WARRANTY, INDEMNIFICATION TERMS OR LIMITATIONS OF LIABILITY.

1. **WARRANTOR**: IN THIS WARRANTY, WARRANTOR SHALL MEAN "DEALER, DISTRIBUTOR, AND/OR MANUFACTURER."

2. **ELEMENTS OF WARRANTY**: THIS PRODUCT IS WARRANTED TO BE FREE FROM DEFECTS IN MATERIALS AND CRAFTSMANSHIP WITH ONLY THE LIMITATIONS AND EXCLUSIONS SET OUT BELOW.

3. **WARRANTY AND REMEDY**: TWO-YEAR WARRANTY — IN THE EVENT THAT THE PRODUCT DOES NOT CONFORM TO THIS WARRANTY AT ANY TIME DURING THE TIME OF TWO YEARS FROM ORIGINAL PURCHASE, WARRANTOR WILL REPAIR THE DEFECT AND RETURN IT TO YOU AT NO CHARGE.

THIS WARRANTY SHALL TERMINATE AND BE OF NO FURTHER EFFECT AT THE TIME THE PRODUCT IS: (1) DAMAGED BY EXTRANEOUS CAUSE SUCH AS FIRE, WATER, LIGHTNING, ETC. OR NOT MAINTAINED AS REASONABLE AND NECESSARY; OR (2) MODIFIED; OR (3) IMPROPERLY INSTALLED; OR (4) MISUSED; OR (5) REPAIRED OR SERVICED BY SOMEONE OTHER THAN WARRANTORS' AUTHORIZED PERSONNEL OR SOMEONE EXPRESSLY AUTHORIZED BY WARRANTOR'S TO MAKE SUCH SERVICE OR REPAIRS; (6) USED IN A MANNER OR PURPOSE FOR WHICH THE PRODUCT WAS NOT INTENDED; OR (7) SOLD BY ORIGINAL PURCHASER.

LIMITED WARRANTY, LIMITATION OF DAMAGES AND DISCLAIMER OF LIABILITY FOR DAMAGES: THE WARRANTOR'S OBLIGATION UNDER THIS WARRANTY IS LIMITED TO REPAIR OR REPLACEMENT OF THE PRODUCT, AT THE WARRANTOR'S OPTION AS TO REPAIR OR REPLACEMENT. IN NO EVENT SHALL WARRANTORS BE LIABLE OR RESPONSIBLE FOR PAYMENT OF ANY INCIDENTAL, CONSEQUENTIAL, SPECIAL AND/OR PUNITIVE DAMAGES OF ANY KIND, INCLUDING BUT NOT LIMITED TO ANY LABOR COSTS, PRODUCT COSTS, LOST REVENUE, BUSINESS INTERRUPTION LOSSES, LOST PROFITS, LOSS OF BUSINESS, LOSS OF DATA OR INFORMATION, OR FINANCIAL LOSS, FOR CLAIMS OF ANY NATURE, INCLUDING BUT NOT LIMITED TO CLAIMS IN CONTRACT, BREACH OF WARRANTY OR TORT, AND WHETHER OR NOT CAUSED BY WARRANTORS' NEGLIGENCE. IN THE EVENT THAT IT IS DETERMINED IN ANY ADJUDICATION THAT THE LIMITED WARRANTIES OF REPAIR OR REPLACEMENT ARE INAPPLICABLE, THEN THE PURCHASER'S SOLE REMEDY SHALL BE PAYMENT

TO THE PURCHASER OF THE ORIGINAL COST OF THE PRODUCT, AND IN NO EVENT SHALL WARRANTORS BE LIABLE OR RESPONSIBLE FOR PAYMENT OF ANY INCIDENTAL, CONSEQUENTIAL, SPECIAL AND/OR PUNITIVE DAMAGES OF ANY KIND, INCLUDING BUT NOT LIMITED TO ANY LOST REVENUE, BUSINESS INTERRUPTION LOSSES, LOST PROFITS, LOSS OF BUSINESS, LOSS OF DATA OR INFORMATION, OR FINANCIAL LOSS, FOR CLAIMS OF ANY NATURE, INCLUDING BUT NOT LIMITED TO CLAIMS IN CONTRACT, BREACH OF WARRANTY OR TORT, AND WHETHER OR NOT

CAUSED BY WARRANTORS' NEGLIGENCE.

WITHOUT WAIVING ANY PROVISION IN THIS LIMITED WARRANTY, IF A CIRCUMSTANCE ARISES WHERE WARRANTORS ARE FOUND TO BE LIABLE FOR ANY LOSS OR DAMAGE ARISING OUT OF MISTAKES, NEGLIGENCE, OMISSIONS, INTERRUPTIONS, DELAYS, ERRORS OR DEFECTS IN WARRANTORS' PRODUCTS OR SERVICES, SUCH LIABILITY SHALL NOT EXCEED THE TOTAL AMOUNT PAID BY THE CUSTOMER FOR WARRANTORS' PRODUCT AND SERVICES OR $250.00, WHICHEVER IS GREATER. YOU HEREBY RELEASE WARRANTORS FROM ANY AND ALL OBLIGATIONS, LIABILITIES AND CLAIMS IN EXCESS OF THIS LIMITATION.

INDEMNIFICATION AND COVENANT NOT TO SUE: YOU WILL INDEMNIFY, DEFEND AND HOLD HARMLESS WARRANTORS, THEIR OWNERS, DIRECTORS, OFFICERS, EMPLOYEES, AGENTS, SUPPLIERS OR AFFILIATED COMPANIES, AGAINST ANY AND ALL CLAIMS, DEMANDS OR ACTIONS BASED UPON ANY LOSSES, LIABILITIES, DAMAGES OR COSTS, INCLUDING BUT NOT LIMITED TO DAMAGES THAT ARE DIRECT OR INDIRECT, INCIDENTAL, SPECIAL OR CONSEQUENTIAL, AND INCLUDING ATTORNEYS FEES AND LEGAL COSTS, THAT MAY RESULT FROM THE INSTALLATION, OPERATION, USE OF, OR INABILITY TO USE WARRANTORS' PRODUCTS AND SERVICES, OR FROM THE FAILURE OF THE WARRANTORS' SYSTEM TO REPORT A GIVEN EVENT OR CONDITION, WHETHER OR NOT CAUSED BY WARRANTORS' NEGLIGENCE.

YOU AGREE TO RELEASE, WAIVE, DISCHARGE AND COVENANT NOT TO SUE WARRANTORS, THEIR OWNERS, DIRECTORS, OFFICERS, EMPLOYEES, AGENTS, SUPPLIERS OR AFFILIATED COMPANIES, FOR ANY AND ALL LIABILITIES POTENTIALLY ARISING FROM ANY CLAIM, DEMAND OR ACTION BASED UPON ANY LOSSES, LIABILITIES, DAMAGES OR COSTS, INCLUDING BUT NOT LIMITED TO DAMAGES THAT ARE DIRECT OR INDIRECT, INCIDENTAL, SPECIAL OR CONSEQUENTIAL, AND INCLUDING ATTORNEYS FEES AND LEGAL COSTS, THAT MAY RESULT FROM THE INSTALLATION, OPERATION, USE OF, OR INABILITY TO USE WARRANTORS' PRODUCTS AND SERVICES, OR FROM THE FAILURE OF THE WARRANTORS' SYSTEM TO REPORT A GIVEN EVENT OR CONDITION, WHETHER OR NOT CAUSED BY WARRANTORS' NEGLIGENCE, EXCEPT AS NECESSARY TO ENFORCE THE EXPRESS TERMS OF THIS LIMITED WARRANTY.

EXCLUSIVE WARRANTY: THE LIMITED WARRANTY OR WARRANTIES DESCRIBED HEREIN CONSTITUTE THE SOLE WARRANTY OR WARRANTIES TO THE PURCHASER. ALL IMPLIED WARRANTIES ARE EXPRESSLY DISCLAIMED, INCLUDING: THE WARRANTY OF MERCHANTABILITY AND THE WARRANTY OF FITNESS FOR A PARTICULAR USE AND THE WARRANTY OF FITNESS FOR A PARTICULAR PURPOSE AND THE WARRANTY OF NON-INFRINGEMENT AND/OR ANY WARRANTY ARISING FROM A COURSE OF DEALING, USAGE, OR TRADE PRACTICE.

IT MUST BE CLEAR THAT THE WARRANTORS ARE NOT INSURING YOUR PREMISES OR BUSINESS OR GUARANTEEING THAT THERE WILL NOT BE DAMAGE TO YOUR PERSON OR PROPERTY OR BUSINESS IF YOU USE THIS PRODUCT. YOU SHOULD MAINTAIN INSURANCE COVERAGE SUFFICIENT TO PROVIDE COMPENSATION FOR ANY LOSS, DAMAGE, OR EXPENSE THAT MAY ARISE IN CONNECTION WITH THE USE OF PRODUCTS OR SERVICES, EVEN IF CAUSED BY WARRANTORS' NEGLIGENCE. THE WARRANTORS ASSUME NO LIABILITY FOR INSTALLATION OF THE PRODUCT AND/

OR INTERRUPTIONS OF THE SERVICE DUE TO STRIKES, RIOTS, FLOODS, FIRE, AND/OR ANY CAUSE BEYOND SELLER'S CONTROL, FURTHER SUBJECT TO THE LIMITATIONS EXPRESSED IN ANY LICENSE AGREEMENT OR OTHER AGREEMENT PROVIDED BY WARRANTORS TO PURCHASER.

THE AGREEMENT BETWEEN THE WARRANTORS AND THE PURCHASER, INCLUDING BUT NOT LIMITED TO THE TERMS AND CONDITIONS HEREIN SHALL NOT BE GOVERNED BY THE CONVENTION FOR THE INTERNATIONAL SALE OF GOODS. WHERE APPLICABLE, THE UNIFORM COMMERCIAL CODE AS ADOPTED BY THE STATE OF DELAWARE SHALL APPLY.

4. **PROCEDURE FOR OBTAINING PERFORMANCE OF WARRANTY**: IN THE EVENT THAT THE PRODUCT DOES NOT CONFORM TO THIS WARRANTY, THE PRODUCT SHOULD BE SHIPPED OR DELIVERED FREIGHT PREPAID TO A WARRANTOR WITH EVIDENCE OF ORIGINAL PURCHASE.

5. **LEGAL REMEDIES AND DISCLAIMER**: SOME JURISDICTIONS MAY NOT ALLOW, OR MAY PLACE LIMITS UPON, THE EXCLUSION AND/OR LIMITATION OF IMPLIED WARRANTIES, INCIDENTAL DAMAGES AND/OR CONSEQUENTIAL DAMAGES FOR SOME TYPES OF GOODS OR PRODUCTS SOLD TO CONSUMERS AND/OR THE USE OF INDEMNIFICATION TERMS. THUS, THE EXCLUSIONS, INDEMNIFICATION TERMS AND LIMITATIONS SET OUT ABOVE MAY NOT APPLY, OR MAY BE LIMITED IN THEIR APPLICATION, TO YOU. IF THE IMPLIED WARRANTIES CAN NOT BE EXCLUDED, AND THE APPLICABLE LAW PERMITS LIMITING THE DURATION OF IMPLIED WARRANTIES, THEN THE IMPLIED WARRANTIES HEREIN ARE TO BE LIMITED TO THE SAME DURATION AS THE APPLICABLE WRITTEN WARRANTY OR WARRANTIES HEREIN. THE WARRANTY OR WARRANTIES HEREIN MAY GIVE YOU SPECIFIC LEGAL RIGHTS THAT WILL DEPEND UPON THE APPLICABLE LAW. YOU MAY ALSO HAVE OTHER LEGAL RIGHTS DEPENDING UPON THE LAW IN YOUR JURISDICTION.

6. **CHOICE OF FORUM AND CHOICE OF LAW**: IN THE EVENT THAT A DISPUTE ARISES OUT OF OR IN CONNECTION WITH THIS LIMITED WARRANTY, THEN ANY CLAIMS OR SUITS OF ANY KIND CONCERNING SUCH DISPUTES SHALL ONLY AND EXCLUSIVELY BE BROUGHT IN EITHER THE COURT OF COMMON PLEAS OF DELAWARE COUNTY, PENNSYLVANIA OR THE UNITED STATES DISTRICT COURT FOR THE EASTERN DISTRICT OF PENNSYLVANIA.

REGARDLESS OF THE PLACE OF CONTRACTING OR PERFORMANCE, THIS LIMITED WARRANTY AND ALL QUESTIONS RELATING TO ITS VALIDITY, INTERPRETATION, PERFORMANCE AND ENFORCEMENT SHALL BE GOVERNED BY AND CONSTRUED IN ACCORDANCE WITH THE LAWS OF THE STATE OF DELAWARE, WITHOUT REGARD TO THE PRINCIPLES OF CONFLICTS OF LAW.

Effective date 05/01/2004

PHONETICS, INC. d.b.a. SENSAPHONE

901 Tryens Road

Aston, PA 19014
Phone: 610.558.2700 Fax: 610.558.0222
www.sensaphone.com

TABLE OF CONTENTS

IMPORTANT SAFETY INSTRUCTIONS 3
FCC REQUIREMENTS 4

CHAPTER 1: INTRODUCTION 13
CELL682 DIAGRAM 14
QUICK START 15
CELL682 WEB PAGE 15
TECHNICAL SUPPORT 16

CHAPTER 2: INSTALLATION 17
OPERATING ENVIRONMENT. 17
ACTIVATING YOUR CELL682 17
MOUNTING THE CELL682 (NEMA-4X HOUSING) 17
LOCKING THE NEMA 4X ENCLOSURE. 18
ANTENNA INFORMATION 19
CONNECTING THE POWER SUPPLY 19
CONNECTING THE BATTERY 20
WIRING PROCEDURE 20
GROUNDING 21
WIRING SENSORS TO DRY CONTACT INPUTS. 21
WIRING SENSORS TO ANALOG INPUTS. 23
WIRING RECOMMENDATIONS 24

CHAPTER 3: SOFTWARE INSTALLATION. 27
INSTALLING AND STARTING THE SOFTWARE. 27
ACTIVATING YOUR CELL682 27
CHECKING WIRELESS SIGNAL STRENGTH 29
CELL682 WEB PAGE 30

CHAPTER 4: INPUT PROGRAMMING 31
ALARM STATES 31
DRY CONTACT INPUTS 32
DRY CONTACT PROGRAMMING 32
ANALOG INPUTS 34
ANALOG INPUTS PROGRAMMING 35

CHAPTER 5: OUTPUT PROGRAMMING 38
SETTING THE OUTPUT NAME 38
CONFIGURING THE OUTPUT OPERATING MODE. 39
SWITCHING THE OUTPUT 39
OUTPUT STATUS & STATISTICS 39

CHAPTER 6: PUMP CONTROL. 41
HOW IT WORKS—FLOAT SWITCHES. 41
HOW IT WORKS—ANALOG LEVEL SENSOR 42
INSTALLATION RECOMMENDATIONS 42
PROGRAMMING FOR PUMP CONTROL. 43
OUTPUT WIRING. 44

CHAPTER 7: MACHINE-TO-MACHINE CONTROL 45
LOCAL OUTPUT CONTROL 46
IMPORTANT INFORMATION AND WARNINGS 46
SAMPLE APPLICATION. 47

CHAPTER 8: ALARM NOTIFICATION 49
HOW DOES NOTIFICATION WORK 49
VOICE PHONE CALL 49
INTERNET E-MAIL 51
ALPHANUMERIC PAGER 52
TEXT MESSAGING TO CELL PHONES. 53
ALARM ACKNOWLEDGMENT VIA E-MAIL. 57
ADDITIONAL INFORMATION. 57

CHAPTER 9: OPERATION 59
PART ONE: ALARM NOTIFICATION AND ACKNOWLEDGMENT. 59
TIER DELAY 60
ALARM ACKNOWLEDGMENT 61
ALARM ACKNOWLEDGMENT—TEXT MESSAGE TO CELL PHONE 62
PART TWO: STATUS REQUEST 62

CHAPTER 10: CELL682 WEB PAGE 64
STATUS REFRESH. 64
PROGRAMMING REFRESH. 64
PROGRAMMING VIA THE WEB PAGE 64

SWITCHING OUTPUTS VIA THE WEB PAGE 65
ALARM ACKNOWLEDGEMENT HISTORY 65

CHAPTER 11: TESTING THE CELL682 66
NOTIFICATION TESTING 66
INPUT TESTING 66
OUTPUT TESTING 67
CONTROL PROGRAMMING 67
PUMP CONTROL 67

APPENDIX A: CHECKING YOUR CELL682 FOR PROPER OPERATION. 69

APPENDIX B: TROUBLESHOOTING 70

APPENDIX C: THERMISTOR TABLE. 74
10K THERMISTOR DATA. 74
2.8K THERMISTOR DATA 74

APPENDIX D: CELL682 SPECIFICATIONS 75
ENVIRONMENTAL INPUTS. 75
RELAY OUTPUTS 75
LED INDICATORS. 75
POWER SUPPLY. 75
ENVIRONMENTAL. 75
PHYSICAL: CELL682 UNIT IN NEMA-4 ENCLOSURE 75

APPENDIX E: REPLACING THE BACKUP BATTERY. 76

APPENDIX F: OPTIONAL ACCESSORIES. 78

APPENDIX G: RETURNING YOUR CELL682 FOR REPAIR. 79

Test Log 80

CHAPTER 1: INTRODUCTION

Congratulations on your purchase of the Cell682 by Sensaphone.

The Cell682 is a powerful monitoring, alarm, and control system. Its built-in wireless technology means you won't need a telephone line to communicate with the unit. It can monitor and control your environment and equipment using eight dry contact inputs, six analog inputs, built-in power failure detection, and two relay outputs. It can perform simplex or duplex alternating pump control using a level transducer or float switches. The unit can also perform machine-to-machine control among multiple Cell682 devices. Up to 8 machine-to-machine control algorithms can be configured per device so that input conditions on one Cell682 can logically control outputs on another using simple, fill-in-the-blank, comparison programming. The unit features several communication options including: voice telephone call, e-mail, and text messaging. You can also request a status report from any e–mail compatible device. The Cell682 is fully programmable via the included Cell682 Software package for Windows or through the unit's web page at www.Cell682.com. Activation of a wireless messaging plan required.

The Cell682 will produce a web page of input and output status and alarm acknowledgement history that can be viewed at **www.cell682.com**. You can also program the unit or control outputs from the web page. The Cell682 is the ultimate choice for remote monitoring and control where telephone lines are non-existent or too expensive. Applications include pump houses, cable TV huts, remote equipment rooms, and tower light monitoring.

On the front of the unit are LED indicators to show the operating status (Power, Battery OK, In-Range, Registered, Alarm, and Outputs). All programming is stored in nonvolatile memory so that all programming is retained even without power. A complete status report of all monitored conditions can be retrieved via e-mail for viewing on a computer or text messaging device. The Cell682.com web page can be updated on demand to allow viewing of the current conditions at the site from any internet-connected computer. The unit comes in a plastic NEMA-4X enclosure with internal rechargeable battery backup, power supply and antenna.

FEATURES

- 8 Dry Contact Inputs: NO, NC, Pulse Count, Equipment Run-Time
- 6 Analog Inputs: 2.8K and 10K Thermistor (temperature), or 4–20mA
- 2 Relay Outputs: 20 different automatic and manual modes
- Local Logic Control
- Machine-to-Machine Control among Cell682 units
- Duplex and Simplex Pump Control
- Wireless Alarm Message Delivery via Voice, E-mail, or text message.
- Status & Programming via web page
- NEMA 4X enclosure and Battery Backup

CELL682 DIAGRAM

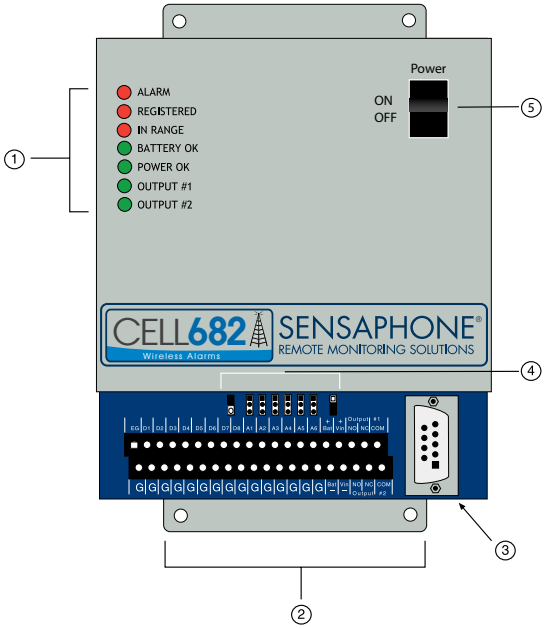

1. LEDs
2. Terminal blocks
3. RS-232 DCE
4. Jumpers for Temperature or 4–20mA settings
5. Power On, Off switch

QUICK START

When installing and programming a Cell682 there are several steps required for all installations. Listed below are those required for a typical installation and start-up of the Cell682.

1) Confirm wireless coverage for the installation site. The CELL682 uses GSM cellular providers such as T-Mobile and AT&T. You can check "data" coverage using their respective websites or contact Sensaphone technical support and we'll check it for you.
2) Activate a wireless service plan for the unit. Contact Sensaphone and have your serial number available. This is required for the unit to operate. Activation enables access to your unit via the CELL682 website, as well as provides for notification of alarms via e-mail and voice phone call.
3) Install the unit in an area that provides good cellular reception. An optional external antenna with 16' cable is available, if necessary.
4) Attach the antenna to the top of the enclosure and plug-in the power supply. Connect the black battery wire (taped to the inside of the enclosure) to the (BAT -) terminal.
5) Once the unit powers-up, make sure the In Range and Registered LED's are lit.
6) Configure the input jumpers, if necessary, and connect the sensors to the terminal strip.
7) Verify status on the web site. (the PIN number is the last four digits of the serial number and the default password is "cell682").

CELL682 WEB PAGE

Your CELL682 is accessible via the Internet at www.CELL682.com. Simply enter your PIN and password (default is cell682) and you will be logged in to the web page for your device. Your PIN is the last 4 digits of your serial number. Be sure to change your password for security purposes. To see the current values click the Status Refresh link and in about 2 minutes you will see the current input and output values displayed on the page. You can make programming changes and even control the relay outputs from the web page. If any programming was performed using a direct connection to the serial port of the CELL682, then be sure to click the Programming Refresh link on the web page, so that you will be viewing the latest programming in the device..

TECHNICAL SUPPORT

This instruction manual will help you install and program the Cell682 properly. Be sure to read it completely before beginning the installation process. If there are any questions or problems that arise upon installation or operation, please contact our Technical Support team:

SENSAPHONE®
901 Tryens Road
Aston, PA 19014
Phone: 610.558.2700
FAX: 610.558.0222
support@sensaphone.com

CHAPTER 2: INSTALLATION

OPERATING ENVIRONMENT

The Cell682 should be mounted and operated in a clean, dry environment. The unit must communicate to the wireless network, so care must be taken not to install the unit inside a metal cabinet or other location that will prevent the unit from receiving a radio signal unless the antenna can be relocated to a location free of obstruction. The unit is microprocessor-controlled and, as a result, should not be installed near devices that generate strong electromagnetic fields. Such interference is typically generated by power switching equipment such as motors, contactors, or variable frequency drives. Where this is unavoidable, mount the unit in a separate, grounded steel enclosure with an external antenna (see Appendix F: Accessories). A poor operating environment may result in unwanted system resets and/or system lockup. The temperature range the unit can operate in is -22°F to 140°F (-30°C to 60°C).

WARNING: Attach the antenna before applying power to the Cell682. Never remove the antenna while the unit is powered on.

ACTIVATING YOUR CELL682

Your Cell682 device *must* be activated on the wireless network before you can send or receive messages *and* before any local programming is performed for the first time.

To activate your Cell682 device, fill out the registration form included with the package and follow the instructions, or contact your sales representative with the device serial number.

Your Cell682 is activated when the “In Range” and “Registered” LEDs are lit.

MOUNTING THE CELL682 (NEMA-4X HOUSING)

Locate a suitable mounting location for the Cell682 enclosure that provides good radio reception and convenient wiring to your equipment and power. On the top and bottom of the housing are mounting tabs to attach the unit to a wall. The mounting surface should be sturdy enough to support 10 lbs. The unit should be mounted using four #10-32 bolts where appropriate, or four #10 tapping screws. (The screw kit for the Cell682 includes (4) #10-32 screws, (4) #10-32 nuts, and (4) #10 lockwashers). When mounting the unit to a wall, make sure the mounting screws fully engage a solid member (for example, a stud) of the support structure. Mount the Cell682 in an upright position so that you can easily connect wires to the terminal strips. The dimensions of the NEMA-4x enclosure are: 12.1” x 8.0” x 5.5” / 30.7 x 20.3 x 13.9cm. See Figure 1.

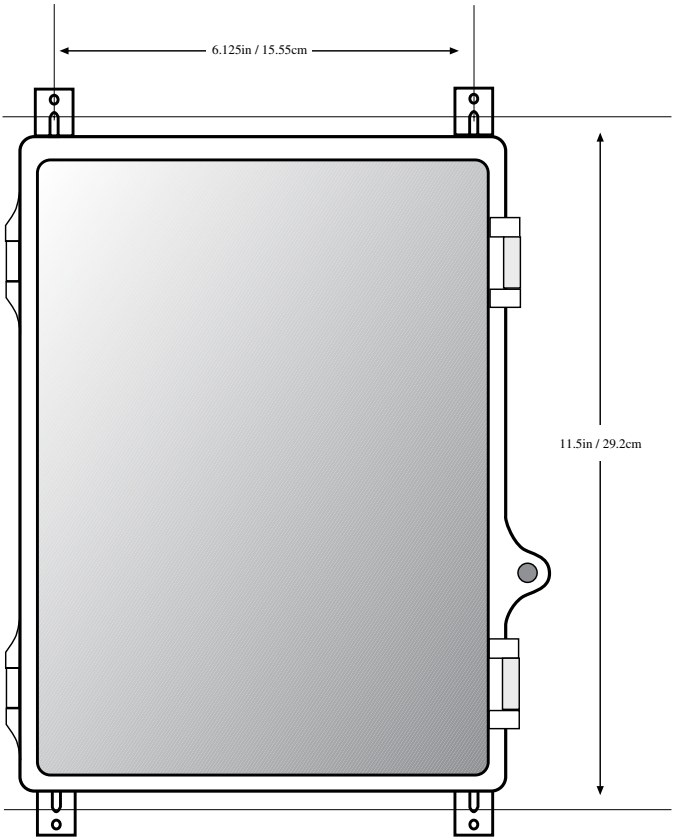

Figure 1: NEMA-4 Mounting diagram

LOCKING THE NEMA 4X ENCLOSURE

The Cell682 enclosure can be locked by installing a small padlock through the loop on the front door of the enclosure. See Figure 2.

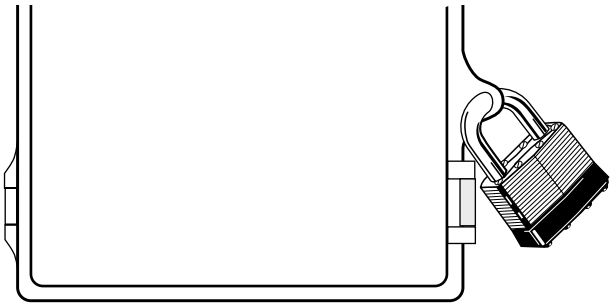

Figure 2: Locking the NEMA-4x enclosure

ANTENNA INFORMATION

The Cell682 comes with a unity-gain antenna designed specifically for the frequency range required. In order to comply with FCC RF exposure, the external antenna must be mounted in a location where people will never come within 20cm of the antenna. The gain of the antenna may not exceed 0dBi. For optimum antenna performance, there should be no metal objects within close proximity of the antenna.

> **WARNING:** Do not over-tighten the antenna on the Cell682; this may cause permanent damage to the device.

The antenna must be connected before the device is powered up.

CONNECTING THE POWER SUPPLY

The Cell682 requires a 18VDC power supply to operate. This power supply will charge the internal 12V battery and provide the necessary power to transmit messages over the wireless network.

WARNING: Do not substitute supplies with lower capacity.

Connect the positive terminal of the Power Supply to the **+Vin** terminal on the Cell682.

Connect the negative terminal of the Power Supply to the **-Vin** terminal on the Cell682.

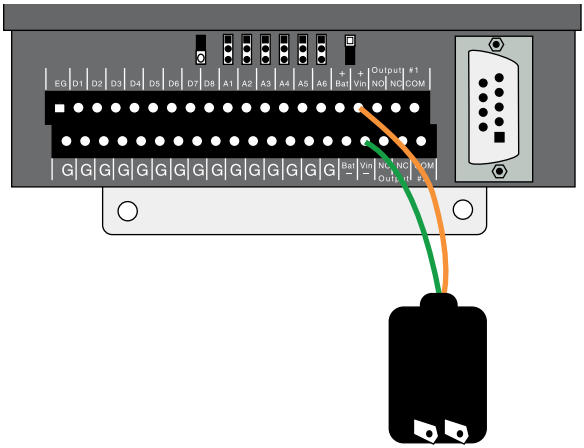

Figure 3: Power Supply Wiring

CONNECTING THE BATTERY

The CELL682 contains an internal 12V rechargeable battery that must be wired to the terminal strip at the time of installation (see procedure below). The battery will power the system for several hours in the event of a power failure. The unit incorporates circuitry to maintain the proper charge for a 12V gel-cell battery whenever the power supply is plugged-in. The unit also includes special circuitry to prevent the battery from being damaged in the event of an extended power outage. The battery should provide approximately 3-5 years of service life before needing replacement depending on temperature and the number of charge/discharge cycles.

WIRING PROCEDURE

Connect the positive terminal of the battery (red wire) to the + **Bat** terminal on the Cell682.

Connect the negative terminal of the battery (black wire) to the – **Bat** terminal on the Cell682.

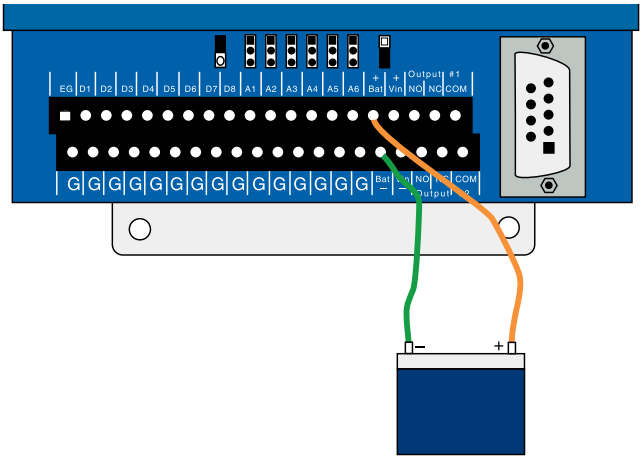

Figure 4: Battery connection

The battery is considered low at 12.0V and the Battery LED will blink at this voltage level. If main power is less than 7.0V and the battery voltage reaches 11V, the battery LED will go out and the unit will go into hibernation mode (a low-power mode in which the unit shuts down). The unit will return to its regular operating mode when either the main power is restored or the battery voltage rises above 11.5V. If the battery voltage continues to fall below 10.5V, the unit will disconnect the battery to prevent deep discharge damage to the battery. The unit will not reconnect the battery until the battery voltage rises above 12.5V.

GROUNDING

Connect a #14AWG copper wire to the earth ground terminal (marked "EG") on the left end of the terminal strip and connect the other end to a ground rod or metal cold water pipe *(See Figure 6)*. It is extremely important that the earth ground connection be as short as possible. The ground rod should have sufficient depth to provide a low impedance connection to earth. This connection is required for the surge/lightning protection circuits to function properly.

NOTE: Proper earth grounding of the Cell682 is required for warranty coverage.

Ground rods can typically be found at local electrical supply houses and/or hardware stores. You MUST contact your state "Call before you dig" hotline at least *two* days before you install your ground rod, to insure that it is safe to install the ground rod in a chosen area.

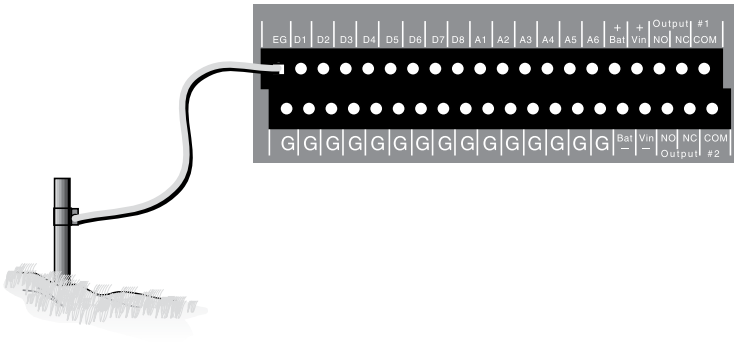

Figure 5: Grounding the Cell682

WIRING SENSORS TO DRY CONTACT INPUTS

The Cell682 has 8 Dry Contact inputs that can be used to monitor Normally Open (N.O.) or Normally Closed (N.C.) sensors. In addition, they can also be used for pulse counting and equipment run-time accumulation. When used for pulse count or run time functions, the unit will count the pulse (or accumulate time) when the input changes to the opposite of its normal state.

Dry contact sensors are wired to the terminals labeled D1 through D8. The corresponding Ground terminals are located on the lower level terminal strip. The input type is programmed within the Cell682 Software or website.

WARNING: Do not use sensors, switches, or relays that supply any voltage or current to the Cell682.

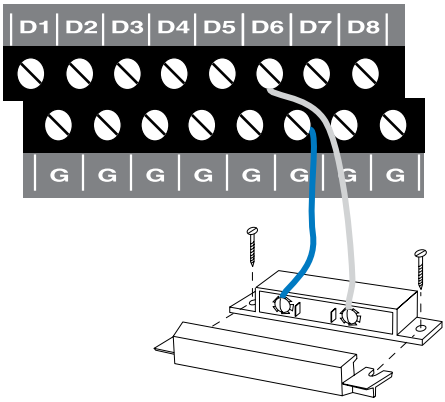

Figure 6: Sensor connected to a dry contact input]

Any N.O. or N.C. sensor can be attached to the Cell682 using 18–24 gauge wire. For distances of 1000' or more, use heavier gauge wire. When running wire outdoors it is recommended that shielded cable be used. Connect the shield to a good earth ground or metallic cold water pipe. The total resistance of the circuit cannot be greater than 100 ohms. Use wire appropriate for the application. See the wire length recommendations, later in this chapter.

The Cell682 may have more than one sensor connected to the same terminal, however, the normal condition for each sensor on the same terminal must be identical (either all N.O. or all N.C.).

NORMALLY CLOSED SENSORS

To wire more than one normally closed sensor on one input, they must be connected in series. Connect a lead from the first sensor to one of the Dry Contact Inputs on the terminal strip. Next, take the other lead from the first sensor and connect it to one lead from the next sensor. Continue connecting sensors end-to-end until you have connected all of your sensors. Take the second lead from your last sensor and connect it to the ground screw on the Cell682 terminal strip. See Figure 7.

Multiple N.C. inputs are typically magnetic reed switches to monitor the security of windows and doors.

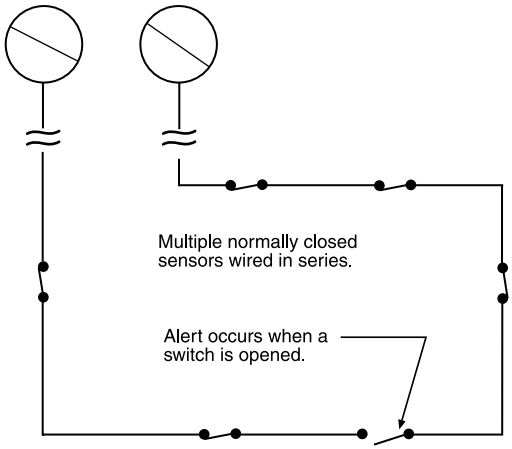

Figure 7: Connecting multiple N.C. sensors to one input terminal

NORMALLY OPEN SENSORS

To wire several normally open sensors to one Dry Contact input, connect them in parallel. To do this, take one lead from each sensor and attach it one of the Dry Contact Input terminals. Then take the second lead from each sensor and attach it to the corresponding ground terminal. See Figure 8.

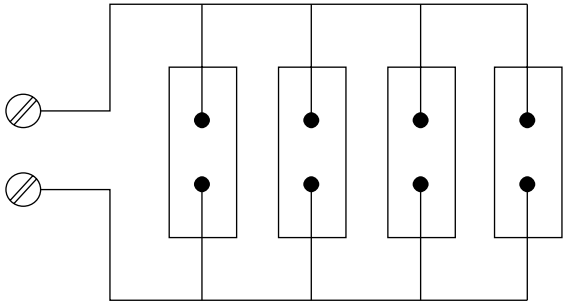

Figure 8: Connecting multiple N.O. sensors to one input terminal

WIRING SENSORS TO ANALOG INPUTS

The Cell682 has 6 Analog inputs that can be used to monitor 2.8K or 10K Thermistors (temperature) or 4–20mA transducers. Analog transducers are wired to the terminals labeled A1 through A6. The corresponding Ground terminals are located on the lower level terminal strip. The input must be configured by setting the corresponding jumper in either the Temperature or 4–20mA position. See figure below:

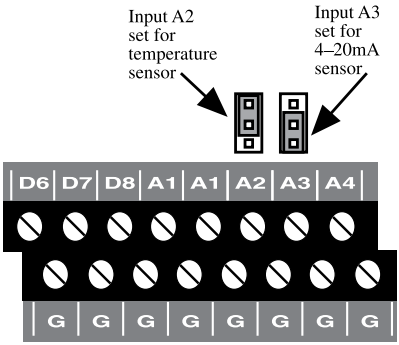

Figure 9: Input A2 configured for temp, A3 configured for 4-20mA

Temperature: The unit will accept 2.8K or 10K thermistors. These should be wired to an Analog Input terminal and the adjacent ground terminal. For compatible thermistors check the accessory list or thermistor data in the appendices. 10K Thermistor temperature range: -60ºF to 175ºF (-51ºC to 79ºC).

4–20mA: A 4–20mA transducer requires you to have an external DC power supply for the transducer. Connect the positive wire of your transducer to the positive terminal of your DC power supply. Connect the negative terminal of the transducer to an Analog Input terminal on the Cell682. Connect the negative terminal from your power supply to the adjacent ground terminal on the Cell682.

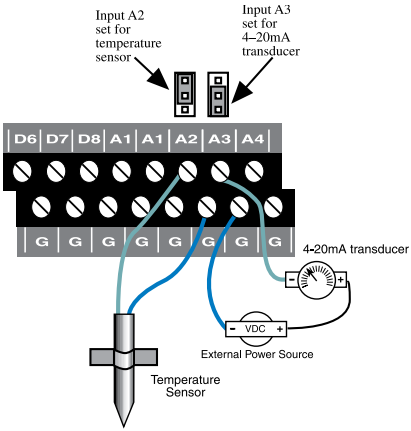

Figure 10: A thermistor and a 4–20mA transducer connected to the unit

WIRING RECOMMENDATIONS

The Cell682 will work fine in indoor environments using unshielded cable. When wiring will be subject to long lengths (>100') or if run outdoors, it is highly recommended that shielded cable be used and that the shield be connected to an earth

ground. This is particularly important for sensor wires that are run in conduit with other noise-generating conductors, such as 60Hz AC. It is strongly recommended that input wiring be run in a conduit separated from AC power or output wiring. When wire runs are long or are in close proximity to large power consuming, power generating, or power switching equipment, it is highly recommended that shielded wire be used.

Also, be sure to use the appropriate gauge wire based on the distance and sensor type. See chart below:

Wire Gauge	Thermistor	NO/NC Contact & 4–20mA
#24	250’	1000’
#22	500’	2000’
#20	1000’	4000’

When preparing wire for connection to the terminal blocks, strip 1⁄4” of insulation from the conductor (see figure below).

Figure 11: Wire stripped for connection

NOTE: All wiring should comply with Section 17 of the UL requirements.

LED INDICATORS

The LEDs provide on-site alarm and status information. Listed below are descriptions of how the LEDs work.

ALARM:

LED Off: No alarms

LED Blinking: Unacknowledged alarm exists

LED On: Acknowledged alarm exists

REGISTERED:

LED Off: Not registered (unit not activated)

LED Blinking: Cell682 is sending or receiving messages

LED On: Registered

IN RANGE:

LED Off: Not in range of wireless network

LED On: In range of wireless network

BATTERY OK:

LED Off: No Battery

LED Blinking: Battery condition low

LED On: Battery OK

POWER OK:

LED Off: Power is Off

LED Blinking slow: Power very low (unit hibernating)

LED Blinking fast: Power is low

LED On: Power is OK

OUTPUT #1:

LED Off: Output Relay #1 is off.

LED On: Output Relay #1 is on.

OUTPUT #2:

LED Off: Output Relay #2 is off.

LED On: Output Relay #2 is on.

CHAPTER 3: SOFTWARE INSTALLATION

This section describes how to install and configure the Cell682 Programming Software for your computer.

INSTALLING AND STARTING THE SOFTWARE

Minimum requirements:

- Microsoft Windows™ 2000, XP, Vista, or 7
- CD-ROM drive
- Serial Port (or USB-to-serial adapter)Installation

The Cell682 Programming Software is easy to install. Make sure that all Windows applications are closed before attempting to run Setup. If you encounter problems during installation, please call Sensaphone Technical Support at 610-558-2700. The Cell682 Software will install to a directory named *C:\Program Files\Cell682*, unless you choose to change the directory name.

1. Start Windows.
2. Insert the Cell682 CD-ROM. The installation program should run automatically. Follow the prompts as directed.

If the software does not install automatically, then click the *Windows Start* button, and select *Run*, then type in d:\setup.exe. Click *OK*. Follow the prompts as directed.

3. Reboot your computer when the installation is complete.

ACTIVATING YOUR CELL682

Your Cell682 device *must* be registered on the wireless network before you can send or receive messages *and* before any local programming is performed for the first time.

To activate your Cell682 device, fill out the registration form included with the package and follow the instructions, or contact your sales representative with the device serial number.

Your Cell682 is activated when the “In Range” and “Registered” LEDs are lit.

Note: The *Registered* LED will blink when the Cell682 is sending or receiving messages.

CONNECTING LOCALLY

The Cell682 Software will allow you to connect with the unit to view status and program it. First, connect a serial cable to a serial port on your computer. Connect the other end to the 9-pin RS-232 connector on the Cell682. Run the Cell682 Software. The following screen will appear.

Figure 1: First-Run Unit Information form

Click the *New* button to set-up a new Cell682 unit. The *Edit Cell682 Unit* screen will appear (see right).

Figure 2: Edit Cell682 Unit

Enter the PIN, Name, Description, and Comm Port settings for this unit. The PIN is the last four digits of the serial number. The unit Name can be up to 20 characters, the Description can be up to 30 characters. Click *OK*. Now click the *Connect* button and the software should connect and start downloading the programming from the unit.

Figure 3: Programming Download in progress

If this was a new unit (factory default settings) the Name you entered on the edit screen will automatically be copied into the unit. After downloading the programming, the main Cell682 window will appear (see next page).

Figure 4: Main Cell682 Window: System Tab

This is a good time to enter a new Password. The Password, while not required for local access, is required for all remote communication. The password can be up to 8 characters. Click *Apply* when finished.

CHECKING WIRELESS SIGNAL STRENGTH

The Cell682 performs all of its communication over the wireless network, so it is very important that there be sufficient signal strength at the installation site. You can check the received signal strength from within the Cell682 software while connected through the serial port. Login to your Cell682 and then click on Help then About from the main menu. A list of items will appear about the Software Version, Firmware Version, etc… the last item is called Signal Quality. In order for the Cell682 to operate properly this number must be greater than 10. A higher number is better. Values typically range from 0 to 50. See the sample screen below:

Figure 5: System Information Window

If your Signal Quality value is less than 10 you must either relocate/reposition the unit to improve its ability to communicate with the wireless network or add an

external antenna that can be installed in a better location. Contact Sensaphone technical support for assistance.

CELL682 WEB PAGE

You can view status and change settings in your Cell682 via the internet. This makes it possible to manage your unit from anywhere in the world. See Chapter 10 for detailed information on using the web page.

HOW IT WORKS

You can perform CELL682 programming using either the CELL682 Software or the webpage. Generally, if you are at the unit's location it's faster to perform the programming using the software while directly connected to the device. Alternatively you can program the unit remotely using the CELL 682 web page. The PIN number of your unit is the last 4 digits of the unit's serial number. The default password for the web page is "cell682". You should change this password for security purposes.

If you performed programming using the CELL 682 software then you must click the Programming Refresh link on the web page to have those programming changes updated on the website. To get just the current status of the Inputs and Outputs, you should click the Status Refresh Link. This will retrieve the latest input status from your unit. It may take a few minutes for this process to complete.

CHAPTER 4: INPUT PROGRAMMING

The Cell682 features 8 dry contact inputs and 6 analog inputs. The analog inputs are configurable as temperature or 4–20mA. The contact inputs can be used with Normally Open (NO) or Normally Closed (NC) sensors. The analog inputs can be used with 2.8K or 10K thermistors for temperature monitoring (available from Sensaphone) or any 4–20mA transducer. The monitored temperature range is -60° to 175° F (-51° to 79° C). See page 20 for 2.8K range. Programmable table values can be entered when using 4–20mA transducers to scale the reading to the appropriate units of measure.

Note: It is highly recommended that if you make any programming changes locally (at the unit via the serial port) after your web page has been initialized, that you click the *Programming Refresh* Link on the web page soon thereafter. This is to ensure that the information you are viewing on the web page is up to date. This will also ensure that the alarm log information displayed on the web page is accurate.

ALARM STATES

Each Dry Contact or Analog input is monitored based on the programming parameters that define the input type and the alarm limits for each input. Based on this programming all inputs will always be in one of four *Alarm States*: Normal, Alarm, Unacknowledged Alarm, or Normal-Unacknowledged. Each of these alarm states is defined below:

A "**Normal**" alarm state means that an input is either:

a) Within the programmed alarm limits.

b) A Normally Open input is open, or a Normally Closed input is closed.

c) An input is beyond its limits or is opposite of its programmed normality, but has not yet met its programmed alarm *Recognition Time*.

An input that is in an "**Alarm**" state means that:

a) The selected input is currently beyond its programmed alarm limits or is opposite of its programmed normality.

b) The selected input has exceeded the programmed recognition time.

c) The alarm has been acknowledged.

An input that is in an "**Unacknowledged Alarm**" state means that:

a) The selected input is currently beyond its programmed alarm limits or is opposite of its programmed normality.

b) The selected input has exceeded the programmed recognition time.

c) The alarm has not been acknowledged.

An input that is in a "**Normal** but **Unacknowledged**" state means that:

a) The selected input is within its programmed alarm limits.

b) A Normally Open input is open, or a Normally Closed input is closed.

c) A prior alarm on the selected input has not yet been acknowledged.

DRY CONTACT INPUTS

The 8 dry contact inputs can be programmed for normally open (NO) or normally closed (NC) operation. In addition, you can have the Cell682 count the number of times the input changes state (pulse count) and maintain the amount of time that the input is in the opposite state (Run Time). Click on the *Dry Contact* Tab to display the main status screen.

Figure 1: Dry Contact tab

This screen displays the current status of all 8 dry contact inputs. If any of the inputs were in alarm the *Alarm State* column would display the word "Alarm." If the alarm was unacknowledged, the Alarm State would say "Alarm;Unack" and a button would appear at the bottom of the screen to acknowledge the alarm.

DRY CONTACT PROGRAMMING

Click the input name to bring up the properties screen for the selected input. The following screen will appear:

Figure 2: Dry Contact properties

If a dry contact changes from its Normal state to the opposite state for the duration of the programmed recognition time, the input will go into alarm. Note that it must be a continuous change to be recognized as an alarm. Once an alarm trips, the unit will begin its notification sequence (unless you are online through the serial port, in which case you can acknowledge the alarm directly and cancel the notification process). Listed below are definitions for each of the parameters for programming the dry contact inputs.

CONFIGURING THE INPUT NAME

The input *Name* is used to describe the condition being monitored. It can be up to 20 characters.

INPUT ENABLE/DISABLE

A channel must be *Enabled* for the input to be read by the Cell682. When a channel is enabled its status will appear on the status screen and on the web page.

CONFIGURING THE INPUT TYPE

The input *Type* can be either Normally Open or Normally Closed. When an input changes from its normal condition to the opposite condition, the Pulse Count (if enabled) will increment, the Run Timer (if enabled) will start running, and the Alarm Recognition timer will start running (if alarms are enabled).

CONFIGURING THE RUN TIMER

The *Run Timer* can be used to track how long an input condition has existed. This can be useful for monitoring pump or generator run times. The value can be preset by clicking on the run time value on the lower right part of the screen.

CONFIGURING THE PULSE COUNTER

The *Pulse Counter* can be used to track how many times a contact closure has changed state. Other possibilities include: measuring rainfall from a tipping bucket rain gauge or measuring liquid flow from a pulsed output flow gauge. The maximum value of the Pulse Counter (after the multiplier is applied) is 2 billion. Minimum Pulse Width for Pulse Count: 50ms.

The *Pulse Count Multiplier* allows you to make each pulse equate to a greater value. For example, suppose a flow gauge outputs a single pulse for every 100 gallons. By setting the *Pulse Count Multiplier* to 100 the Pulse Count value now becomes the actual total number of gallons measured by the gauge. The range of values for the Pulse Count Multiplier is 1 to 65,535.

ALARM ENABLE/DISABLE

The *Enable Alarms* checkbox activates the alarm processing functions for the selected channel. When the input exceeds the the programmed alarm limits and exceeds the programmed recognition time the notification process begins.

ALARM ON RETURN-TO-NORMAL

The Cell682 has the capability to notify you when an input (that had previously gone into alarm) returns to normal. When checked, *Alarm on Return-to-Normal* initiates this notification.

ALARM RECOGNITION TIME

The *Recognition Time* is the time required for a fault condition to qualify as an alarm event. The sensor/channel must remain beyond the limits or in a fault condition continuously for this entire period of time in order to become an alarm. The range of values is 0–32,767 seconds.

ALARM RESET TIME

The *Reset Time* is the time allowed for an acknowledged alarm's fault condition to be corrected before the Cell682 resets (reactivates) the alarm and begins the message delivery process all over again. The minimum reset time is 30 minutes, the maximum is 32,767 minutes.

ANALOG INPUTS

The 6 analog inputs can be programmed for 2.8K or 10K thermistor (temperature in degrees Fahrenheit or Celsius) or 4–20mA transducer. The Cell682 will maintain the minimum and maximum values reached for each channel. When 4–20mA is selected you can enter table low and high values to correlate the 4mA and 20mA signals to actual values for your application. Click on the Analog Inputs Tab to display the main status screen.

Figure 3: Analog Inputs tab

This screen displays the current status of all 6 analog inputs. If any of the inputs were in alarm the *Alarm State* column would display the word "Alarm." If the alarm was unacknowledged the Alarm State would say "Alarm Unack" and a button would appear at the bottom of the screen to acknowledge the alarm.

ANALOG INPUTS PROGRAMMING

Figure 4: Analog Inputs Properties

CONFIGURING THE INPUT NAME

The input Name is used to describe the condition being monitored. It can be up to 20 characters.

CONFIGURING THE INPUT TYPE

The input Type can be temperature 2.8K (°F/°C), 10K (°F/°C), or 4–20mA. Select the type to match your sensor.

Note: Be sure to put the input jumper in the correct position.

INPUT ENABLE/DISABLE

A channel must be Enabled for the input to be read by the Cell682. When a channel is enabled its status will appear on the status screen and on the web page. Select the type of analog input from the pulldown menu.

SETTING TABLE LIMITS

When 4–20mA is selected, you can enter table low and high values to correlate the 4mA and 20mA signals to actual values for your application. For example, suppose you're using a 4–20mA transducer to measure the depth of water in a 15 foot well. Simply enter a Table Low value of 0 and a Table High value of 15 and the Cell682 will scale the input to read between 0 and 15 feet.

Programmable range

Table Low/High: -16,300 to 16,300

Default settings

Table Low value: 0

Table High value: 100

CALIBRATION

To compensate for minor variances in sensor accuracy, an offset may be programmed for each analog input. For example, if the above input were sensing temperature and was reading 3 degrees too low, then the calibration would be set at 3 as shown above, to obtain an accurate reading. Only Analog-type inputs can be calibrated.

ALARM ENABLE/DISABLE

The Enable Alarms checkbox activates the alarm processing functions for the selected channel. When the input exceeds the the programmed low or high alarm limits and exceeds the programmed recognition time the notification process begins.

ALARM ON RETURN-TO-NORMAL

The Cell682 has the capability to notify you when an input (that had previously gone into alarm) has returned to normal, that is, returns to within the programmed alarm limits. When checked, Alarm on Return-to-Normal initiates this notification.

SETTING THE ALARM LIMITS

Each analog input has a programmable Low and High Alarm limit. When the input value goes beyond the programmed alarm limits for the duration of the recognition time, the Cell682 will go into alarm and initiate the alarm notification process.

Programmable range

Alarm Low/High: -16,300 to 16,300

Default settings

Alarm Low value: 0

Alarm High value: 100

ALARM RECOGNITION TIME

The Recognition Time is the time required for a fault condition to qualify as an alarm event. The sensor/channel must remain beyond the programmed limits continuously for this entire period of time in order to become an alarm. The range of values is 0–32,767 seconds.

ALARM RESET TIME

The Reset Time is the time allowed for an acknowledged alarm's fault condition to be corrected before the Cell682 resets (reactivates) the alarm and begins the message delivery process all over again. The minimum reset time is 30 minutes, the maximum is 32,767 minutes.

POWER INPUT

Power monitoring is a built-in function. The unit will go into alarm when the power level drops below 11.75V for the programmed recognition time. In this state the Power LED will blink.

BATTERY INPUT

Battery monitoring is a built-in function. The unit will go into alarm when the battery level drops below 12.0V for the programmed recognition time. In this state the Battery LED will blink.

SPECIAL FUNCTION INPUTS

When the Cell682 is used for Pump Control, several of the inputs are dedicated to a specific task depending on whether *Dry Contact* or *Analog Level* is selected as the Pump Control method. The tables below identify which inputs are used and what function they serve. Refer to the Pump Control chapter for more information.

<u>Dry Contact Fill/Drain Pump Control</u>

Dry Contact Input #6 – Lead pump float switch

Dry Contact Input #7 – Lag pump float switch

Dry Contact Input #8 – All pumps off float switch

<u>Analog Level Fill/Drain Pump Control</u>

Analog Input #6 – connect to analog (4–20mA) level sensor

CHAPTER 5: OUTPUT PROGRAMMING

The Cell682 has two relay outputs capable of switching up to 0.3A at 120VAC, or 1.0A at 24VDC. The outputs can be controlled in a number of ways both automatically and manually. Some examples are listed below:

- Each relay can be manually turned on or off through the PC software or via the Cell682 web page.
- Either relay can be set to turn on when a particular alarm occurs.
- Either relay can be set to turn on when any alarm occurs.
- Either relay can be set to turn on when any digital or any analog alarm occurs.
- One or both relays can be programmed to operate in pump control mode (simplex/duplex) for fill or drain applications.
- A relay can be controlled automatically based on Dry Contact or Analog input values using greater-than, less-than, or equal-to statements *(See Chapter 7: Machine-to-Machine Control)*.
- A relay may also be controlled by another Cell682 unit using machine-to-machine control. This allows the Cell682 to be used for distant pump/well control applications.

Figure 1: Outputs tab

SETTING THE OUTPUT NAME

To set up the relay outputs, click on the *Outputs* tab. Next, click on the Name for Output 1 (blue) to bring up the *Output 1 Properties* screen. Enter a name for the output which describes the device that the output will be controlling.

Figure 2: Output Properties screen

CONFIGURING THE OUTPUT OPERATING MODE

Click the drop-down arrow and select the operating *mode* for the output. You can have the relay automatically turn on for a variety of alarm conditions, either individual alarms or if any alarm occurs. When set to turn ON automatically on an Alarm condition, it will remain ON until the alarm is acknowledged. If you will be controlling the output manually or via a machine-to-machine command, select *Manual* mode. If you will be using the output for fill or drain pump control, select *Pump Control*. For simplex pump control set only one output to Pump Control mode; for duplex pump control set both outputs to Pump Control mode. See Chapter 6 for more information on pump control programming.

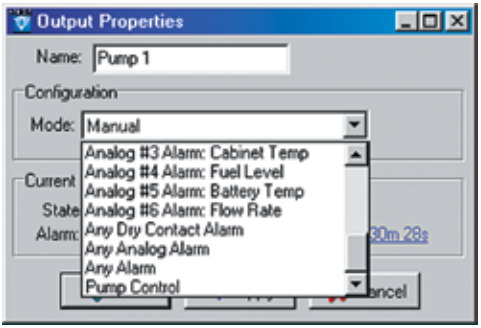

Figure 3: Output Operating mode

SWITCHING THE OUTPUT

To manually turn an output on, click on the current state (On or Off) and select the new state, then click *OK*. See the following screen.

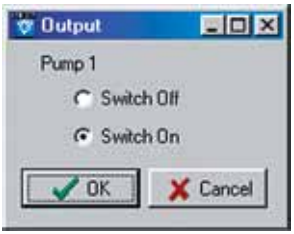

Figure 4: Output manual select

OUTPUT STATUS & STATISTICS

The Cell682 software will display the current state of the output as well as the number of times the relay has turned on, the total time the relay has been on (cumulative), and the alarm status of the output (valid in pump control mode only). This information can be useful for monitoring how often a device (pump,

machine, generator, ...) has been activated and for how long. These values can be reset and/or preset by clicking on the displayed value and entering a new one.

CHAPTER 6: PUMP CONTROL

The Cell682 can be used in Fill or Drain pump control applications using either float switches or an analog level transducer. When used with Float Switches, dry contact inputs #6-8 have a dedicated special function (see below):

Pump Control using Float Switches

Dry Contact Input #6 – Lead pump float switch

Dry Contact Input #7 – Lag pump float switch

Dry Contact Input #8 – Pumps-off float switch

When performing pump control using an analog level transducer (4–20mA), analog input #6 is designated as the well level input.

Note: Only normally-open float switches can be used for pump control (e.g. the switch is open when no water is present).

HOW IT WORKS—FLOAT SWITCHES

When performing drain pump control using float switches, three floats are required: Lead, Lag, and Pumps-Off (see Fig 1). The Lead float determines when to turn on the first pump. If the first pump is unable to bring the level below the Pumps-Off float, then the Lag float will close, turning on the second pump. When the level drops below the Pumps-Off float, both pumps are turned off. If any of the floats get stuck (i.e. the lead and pumps-off floats closed, or the lag and pumps-off floats closed) then both pumps will be turned on and an alarm will be tripped on the output or outputs in question. In duplex mode, the Cell682 will automatically alternate between the two pumps to facilitate uniform run time between the two.

If only one relay output is set to pump-control mode, then simplex control is performed. In Simplex mode only the Lead float (Dry Contact #6) and Pumps-Off float (Dry Contact #8) are required. Either output relay can be used in simplex mode.

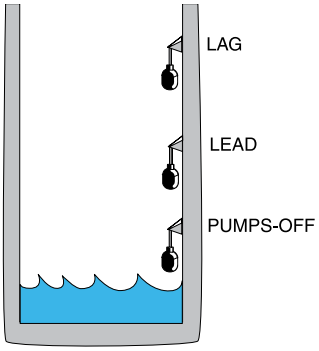

Figure 1: Float positions for a drain application

In a Fill application, the Lag and Pumps-Off floats would change position as shown below:

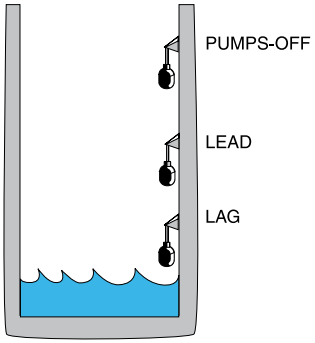

Fig 2. Float positions for a Fill application

In this case, the pumps are attempting to keep the well full. When the well is full all three floats are closed. If the level drops below the Lead float, then the first pump will turn on. If the level rises above the Pumps-Off float then the pump will turn off. If the level continues to fall below the Lag float, then the 2nd pump will turn on. Both pumps will remain on until the Pumps-Off float closes. If only one relay output is set to pump-control mode, then simplex control is performed. In Simplex mode only the Lead float (Dry Contact #6) and Pumps-Off float (Dry Contact #8) are required. Either output relay can be used in simplex mode.

HOW IT WORKS—ANALOG LEVEL SENSOR

When performing pump control with an analog level sensor, the Lead, Lag, and Pumps-Off levels are programmed into the Cell682 software. The unit then measures the actual level on Analog Input #6 and turns on the appropriate relay outputs. If both outputs are set to Pump Control mode, then alternating duplex control will be performed. If only one output is set, then Simplex control will be performed. The analog level sensor must be a 4–20mA transducer that is selected and calibrated based on the depth of the well. The specified output of the transducer must be entered into the Table Range settings for Analog Input #6.

INSTALLATION RECOMMENDATIONS

Be sure to install and wire the Cell682 and associated equipment in accordance with all local codes and regulations. Adhere to Standard Practice/Best Practice policies when installing and wiring any control system. Be sure to include hand-operated switches to disconnect power on all pumps/equipment to insure worker safety when installing and servicing equipment.

PROGRAMMING FOR PUMP CONTROL

To program the unit for Pump Control, click on the Outputs tab.

Figure 2: Output properties showing pump control

Next, click on the Pump Control link. This will bring up the pump mode setup screen. Next, select the type of pump control you want to do:

- Drain Analog Level
- Drain Dry Contact Floats
- Fill Analog Level
- Fill Dry Contact Floats

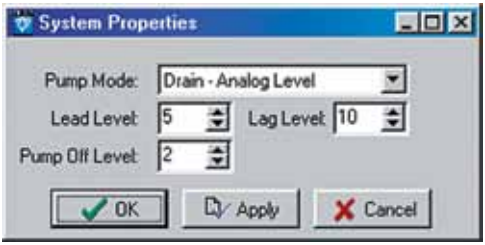

Figure 3: Pump Mode—Analog programming

If you select one of the Analog modes, you will have to fill in the Lead, Lag, and Pumps-Off fields. In Dry Contact Float mode these fields are disabled. Enter the appropriate values and click OK or Apply.

Next, click on the output to use for Pump Control. Click the drop-down box and scroll to the bottom to select Pump Control. Click OK or Apply. This will activate the Pump Control logic. Make sure all input devices and equipment are operational and ready for use. For test purposes you may wish to use hand operated switches to manually control the pumps and simply watch the system LEDs to see if the Cell682 is functioning properly. If you are using “duplex” pump control, select the other output and set it for Pump Control mode also. After verifying that the unit is functioning properly, move your hand-operated pump switches to “Auto” and verify that the Cell682 is properly controlling the system.

OUTPUT WIRING

The output relays on the Cell682 are for low current control signals (0.3A 120VAC/1.0A 24VDC maximum).

DO NOT directly connect the power for the pumps to these relays—THIS WILL PERMANENTLY DAMAGE THE Cell682.

Use the Cell682 outputs to control intermediate motor contactors/relays that will switch actual power to the pumps.

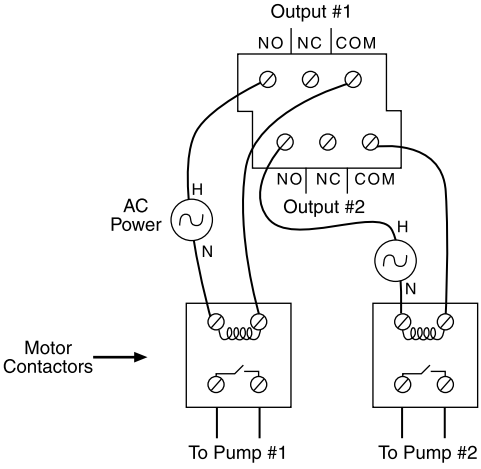

Figure 4: Output wiring to two pumps

CHAPTER 7: MACHINE-TO-MACHINE CONTROL

The Machine-to-Machine Control feature allows you to control outputs of other Cell682 units (or outputs within the same unit) based on input conditions. For example, you can switch an output on a Cell682 unit several miles away if an input on a different unit is greater than a specified value. The output being controlled must be set to manual mode. Up to 8 machine-to-machine control events can be configured per Cell682 unit. Note that when an input condition causes an output to change state, a separate event must be programmed to make the output change back. For example, if you program output #1 to turn on when input #5 is greater than 60, the output will **not** turn off when the input drops below 60. A separate event must be programmed to make the output turn off when the input is less than 60.

To program Machine-to-Machine Control click on the Machine-to-Machine Tab. The following screen will appear:

Figure 1: Machine-to-Machine tab

The 8 peer-to-peer events are listed in the window to the left. Clicking on each one will display a description of the control event programmed for each. To program a new peer-to-peer event click on the first unused (Disabled) peer event and click the *Edit* button. The following screen will appear:

Figure 2: Peer-to-peer Edit screen

Click the down arrow in the *Input Trigger* field to select the input that will initiate the event. If you select a Dry Contact input, you can have the event occur when the selected input goes from *Open-to-Closed* or *Closed-to-Open*. If you select an Analog input you can have the event occur if the input is *equal-to*, *greater-than*, or *less-than* a specified value.

Enter a value for the comparison (range: -16,300 to 16,300).

Note: Peer-to-peer events are triggered as soon as the input meets the trigger conditions. There is no recognition time applied in this case. Also, peer-to-peer events will not be executed while you are on line locally.

Next, enter the *PIN* and *Password* of the Cell682 unit whose output you want to switch. Select the output number and action (either ON or OFF). Click *Apply* or *OK* when finished. Remember, the target output must be set to manual mode, otherwise the command will be ignored. If the password is wrong the command will be ignored as well.

LOCAL OUTPUT CONTROL

You can perform control logic using the same inputs and outputs on a single Cell682 unit. If you want to switch an output on the same Cell682 as the input, then simply enter the unit's own PIN (a password is not required in this case). The output must be set to *manual* mode. Local output control does not use any airtime and also executes instantly (as long as there are no preceding peer-to-peer events that must communicate with a different Cell682 device).

IMPORTANT INFORMATION AND WARNINGS

- It may take several minutes for the peer-to-peer command to reach the destination Cell682.
- Peer-to-peer commands are processed in a sequential, non-predetermined order. This means that if more than one command is triggered, the subsequent commands must wait until the currently processed command is finished. If two peer-to-peer commands are triggered simultaneously that affect the same output, the order of the processing cannot be guaranteed.
- Both the source and destination Cell682 devices must be powered on and operational for peer-to-peer commands to operate correctly.
- If the unit is in the middle of alarm processing, peer-to-peer commands may be delayed while alarms are being sent.
- Peer-to-peer commands are not processed while logged in with the PC software. The user should log off and the serial cable should be unplugged during normal operation to ensure that peer-to-peer commands are properly processed.

- Setting peer-to-peer trigger values too close can cause output oscillations. Peer-to-peer commands are an advanced feature and should be well thought out. Do not use them for critical applications where the risk is unacceptable.
- All peer-to-peer control actions will use a wireless message packet.

SAMPLE APPLICATION

Suppose you had a well and a pump which were several miles apart. When the pump runs, it fills the well. Your goal is to maintain a certain level in the well. If you place one Cell682 unit at each location you can have two peer-to-peer events accomplish your goal. In addition, you can use the Cell682 inputs to monitor other key items such as:

- Well level too low
- Well level too high
- Pump failure
- Power failure
- Generator on
- Temperature

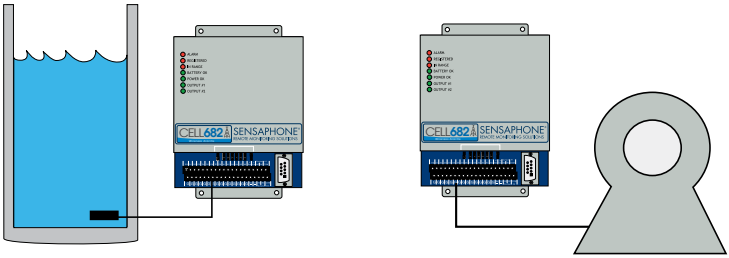

Figure 3: Well and Pump Control via Machine-to-Machine Commands

Let's suppose the well level is 25' and you need to maintain the level between 5' and 20'. The first thing you would need is a level transducer in the well. Next, program your two machine-to-machine events into the Cell682 located at the well. The first would be to turn ON the pump if the level is *Less-Than* 5'. The second event would be to turn the pump OFF if the level is *Greater-Than* 20'. Consider the rate at which the well fills when the pump is running, in order to account for the machine-to-machine command delay time between the Cell682 units. Also note that machine-to-machine control is completely independent of alarm processing, so you can also trip high or low-level alarms based on the well level.

Figure 4: Turn Pump On if Level is Less than 5 feet

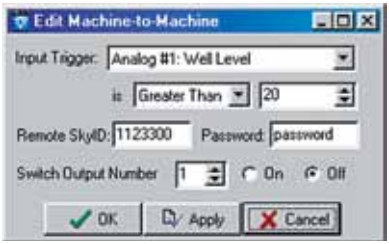

Figure 5: Turn Pump Off is Level is Greater than 20 feet

CHAPTER 8: ALARM NOTIFICATION

The Cell682 can deliver alarm message notifications by voice phone call, internet e-mail, and text messaging to various messaging devices and cell phones. A total of 24 notification destinations can be programmed to be contacted in the event of an alarm. The unit also lets you to set an escalation level for each destination, allowing you to have a group of people contacted first (tier 1) and, if the alarm is not acknowledged, a second group of people (tier 2) contacted. You can program up to 24 tier levels of destinations and include a programmable delay time between each tier.

HOW DOES NOTIFICATION WORK

Once an alarm occurs, the Cell682 will begin sending its alarm message to the programmed destinations. The unit will start with destinations at tier 1. Once the *Tier Delay* expires, the unit will start sending alarm messages to destinations in the next tier. The *Tier Delay* time begins as soon as the alarm occurs, so if it were programmed to 60 minutes, the next tier would start receiving alarm messages one hour after the alarm occurred. The Cell682 will send its alarm message to each destination until it receives acknowledgment, or it will automatically acknowledge the alarm after all destinations have been sent the message or when the last tier delay time has expired.

Note: If you are logged in through the serial port, no alarms will be sent until you log off and disconnect the serial cable. If you acknowledge the alarm through the software before logging off, no alarm messages will be sent. This can be useful for performing on-site maintenance or testing the system. If you are not logged on through the serial port the alarm messages will be sent immediately, one at a time.

VOICE PHONE CALL

The Cell682 can send alarm messages via a voice telephone call. It does this without having a telephone line connected to the unit. When an alarm message is sent as a voice call the number is dialed from the Cell682 Messaging Service Center. The message is spoken from a computer that will customize the message based on the programming in your Cell682 including the programmed *Unit Name*, *PIN*, and *Input Name*. To program a Voice destination, click on the *Alarm Notification* tab.

Figure 1: Alarm Notification

This screen provides a list of the programmed alarm destinations. To program or change a destination's information, click on the name of the person to edit (or select *unused* for a new entry) and then click the *Edit* button. The *Edit Destination* screen will appear:

Figure 2: Contact Edit for Voice Call

Enter the name for this destination (up to 14 characters) and in the *Type* field select *Voice*. In the *Phone #* field enter the area code and telephone number. A sample alarm telephone call is shown below:

"CELL682 Alarm Message"

"Low/High temperature alarm at "*Unit Name*",

"Pin number xxxx",

"*input name*", is "xx" degrees "Fahrenheit/Celsius",

"Level crossed limit of "xx" degrees"

"To acknowledge press 1"

Example:

CELL682 Alarm Message

High temperature alarm at "Jim's Ice Cream"

Pin Number "1234"

"Freezer #5" is 38 degrees Fahrenheit

Level crossed limit of 36 degrees

To acknowledge press 1

To acknowledge the alarm your must press 1 on a touch-tone telephone when prompted. The system will reply with “alarm acknowledged” when it receives your acknowledgment. The message will be repeated 3 times so you have 3 chances to acknowledge the alarm during the call. If the the alarm is not acknowledged the system will hang up, wait a few minutes, and then call again. The system will call up to 3 times per telephone number.

INTERNET E-MAIL

The Cell682 can send alarm messages to internet e-mail addresses. The alarm message will comprise information from within your Cell682 including the programmed *Unit Name*, and *Input Name*. To program an e-mail destination, click on the *Alarm Notification* tab.

Figure 3: Alarm Notification

This screen provides a list of the programmed alarm destinations. To program or change a destination’s information, click on the name of the person to edit (or select *unused* for a new entry) and then click the *Edit* button. The *Edit Destination* screen will appear:

Figure 4: Destination Edit for E-mail

Enter the name for this destination (up to 14 characters) and in the *Type* field select *Internet E-mail*. In the *To:* field enter the e-mail address (up to 34 characters).

Warning: Before entering an e-mail address into the Cell682, be sure to test the address first, using your computer and standard email software. Verify that the address is working and that the message is delivered.

A sample e-mail alarm message is shown below:

```
To: derek@mycompany.com
From: 1234@cell682.com
High Temperature ALARM at "Jim's Ice Cream"
Cell682 #1234
"Freezer #5" is now 38 Deg F
Level crossed limit of 36 Deg F
To acknowledge send 1202
```

ALPHANUMERIC PAGER

The Cell682 can send alarm messages to your alphanumeric pager or mobile text messaging device. The message will be sent to an e-mail address for your pager based on your paging provider and your pin number. The provider-format list below will instruct you on how to enter the e-mail address for your particular service provider. The alarm message will comprise information from within your Cell682 including the programmed *Unit Name* and *Input Name*. To program an e-mail destination click on the *Alarm Notification* tab.

Figure 5: Alarm Notification

This screen provides a list of the programmed alarm destinations. To program or change a destination's information, click on the name of the person to edit (or select *unused* for a new entry) and then click the *Edit* button. The *Destination Edit* screen will appear:

Figure 6: Destination Edit for Alphapager

Enter the name for this destination (up to 14 characters) and in the *Type* field select *Internet E-mail*. In the *To:* field enter the e-mail address as described in the list below (up to 34 characters).

Warning: Before entering an e-mail address into the Cell682, be sure to test the address first, using your computer and standard email software. Verify that the address is working and that the message is delivered.

TEXT MESSAGING TO CELL PHONES

The Cell682 can send alarm messages to your wireless cellular telephone. The message will be sent to an e-mail address for your cell phone based on your cellular provider and your telephone number. The cell-provider/format list below will instruct you on how to enter the e-mail address for your particular service provider. The alarm message will be composed of information from within your Cell682 including the programmed *Unit Name* and *Input Name*. To program an e-mail destination, click on the *Alarm Notification* tab.

Figure 7: Alarm Notification

This screen provides a list of the programmed alarm destinations. To program or change a destination's information, click on the name of the person to edit (or select *unused* for a new entry) and then click the *Edit* button. The *Edit Destination* screen will appear:

Figure 8: Destination Edit for Cell Phone

Enter the name for this destination (up to 14 characters) and in the *Type* field select *Internet E-mail*. In the *To:* field enter the e-mail address as described in the list below (up to 34 characters).

Warning: Before entering an e-mail address into the Cell682, be sure to test the address first, using your computer and standard email software. Verify that the address is working and that the message is delivered.

Cellular Provider	E-mail Address Format
3 River Wireless	xxxxxxxxx@sms.3rivers.net
Advantage Communications	xxxxxxxxx@advantagepaging.com
AirVoice	xxxxxxxxx@mmode.com
Airtouch Pagers	xxxxxxxxx@airtouch.net
Airtouch Pagers	xxxxxxxxx@airtouchpaging.com
Airtouch Pagers	xxxxxxxxx@alphapage.airtouch.com
Airtouch Pagers	xxxxxxxxx@myairmail.com
AllTel	xxxxxxxxx@message.alltel.com
Alltel PCS	xxxxxxxxx@message.alltel.com
Alltel	xxxxxxxxx@alltelmessage.com
Ameritech Paging	xxxxxxxxx@pageapi.com
Arch Pagers (PageNet)	xxxxxxxxx@archwireless.net
Arch Pagers (PageNet)	xxxxxxxxx@epage.arch.com
AT&T	xxxxxxxxx@txt.att.net
Bell South (Blackberry)	xxxxxxxxx@bellsouthtips.com
Bell South Mobility	xxxxxxxxx@blsdcs.net
Bell South	xxxxxxxxx@blsdcs.net
Bell South	xxxxxxxxx@sms.bellsouth.com
Bell South	xxxxxxxxx@wireless.bellsouth.com
Bluegrass Cellular	xxxxxxxxx@sms.bluecell.com
Boost Mobile	xxxxxxxxx@myboostmobile.com
Boost	xxxxxxxxx@myboostmobile.com
CallPlus	xxxxxxxxx@mmode.com
Carolina Mobile Communications	xxxxxxxxx@cmcpaging.com
Cellular One East Coast	xxxxxxxxx@phone.cellone.net
Cellular One PCS	xxxxxxxxx@paging.cellone-sf.com
Cellular One South West	xxxxxxxxx@swmsg.com
Cellular One West	xxxxxxxxx@mycellone.com
Cellular One	xxxxxxxxx@message.cellone-sf.com

Cellular One . . . . . xxxxxxxxx@mobile.celloneusa.com
Cellular One . . . . . xxxxxxxxx@sbcemail.com
Cellular South . . . . . xxxxxxxxx@csouth1.com
Central Vermont Communications . . . . . xxxxxxxxx@cvcpaging.com
CenturyTel . . . . . xxxxxxxxx@messaging.centurytel.net
Cingular (GSM) . . . . . xxxxxxxxx@cingularme.com
Cingular (TDMA) . . . . . xxxxxxxxx@mmode.com
Cingular Wireless . . . . . xxxxxxxxx@mobile.mycingular.net
Cingular . . . . . xxxxxxxxx@cingularme.com
Communication Specialists. . . . . xxxxxxx@pageme.comspeco.net
Cook Paging . . . . . xxxxxxxxx@cookmail.com
Corr Wireless Communications . . . . . xxxxxxxxx@corrwireless.net
Dobson Communications Corporation . . . . . xxxxxxxxx@mobile.dobson.net
Dobson-Alex Wireless /
Dobson-Cellular One . . . . . xxxxxxxxx@mobile.cellularone.com
Edge Wireless . . . . . xxxxxxxxx@sms.edgewireless.com
GCS Paging . . . . . xxxxxxxxx@webpager.us
GTE . . . . . xxxxxxxxx@gte.pagegate.net
GTE . . . . . xxxxxxxxx@messagealert.com
Galaxy Corporation . . . . . xxxxxxxxx@sendabeep.net
GrayLink / Porta-Phone. . . . . xxxxxxxxx@epage.porta-phone.com
Houston Cellular. . . . . xxxxxxxxx@text.houstoncellular.net
Inland Cellular Telephone . . . . . xxxxxxxxx@inlandlink.com
JSM Tele-Page . . . . . xxxxxxxxx@jsmtel.com
Lauttamus Communication. . . . . xxxxxxxxx@e-page.net
MCI Phone . . . . . xxxxxxxxx@mci.com
MCI . . . . . xxxxxxxxx@pagemci.com
Metro PCS . . . . . xxxxxxxxx@metropcs.sms.us
Metro PCS . . . . . xxxxxxxxx@mymetropcs.com
MetroPCS. . . . . xxxxxxxxx@mymetropcs.com
Metrocall 2-way . . . . . xxxxxxxxx@my2way.com
Metrocall . . . . . xxxxxxxxx@page.metrocall.com
Midwest Wireless . . . . . xxxxxxxxx@clearlydigital.com
Mobilecom PA . . . . . xxxxxxxxx@page.mobilcom.net
Mobilfone. . . . . xxxxxxxxx@page.mobilfone.com
Morris Wireless . . . . . xxxxxxxxx@beepone.net

NPI Wireless . . . . . xxxxxxxxx@npiwireless.com
Nextel . . . . . xxxxxxxxx@messaging.nextel.com
Nextel . . . . . xxxxxxxxx@page.nextel.com
Ntelos . . . . . .xxxxxxxxx@pcs.ntelos.com
Omnipoint . . . . . xxxxxxxxx@omnipoint.com
Omnipoint . . . . . xxxxxxxxx@omnipointpcs.com
OnlineBeep . . . . . xxxxxxxxx@onlinebeep.net
PCS One . . . . . xxxxxxxxx@pcsone.net
Pacific Bell . . . . . xxxxxxxxx@pacbellpcs.net
PageMart . . . . . xxxxxxxxx@pagemart.net
PageOne NorthWest . . . . . xxxxxxxxx@page1nw.com
Pioneer / Enid Cellular . . . . . xxxxxxxxx@msg.pioneerenidcellular.com
Price Communications . . . . . xxxxxxxxx@mobilecell1se.com
ProPage . . . . . xxxxxxxxx@page.propage.net
Public Service Cellular . . . . . xxxxxxxxx@sms.pscel.com
Qualcomm . . . . . name@pager.qualcomm.com
Qwest . . . . . xxxxxxxxx@qwestmp.com
RAM Page. . . . . xxxxxxxxx@ram-page.com
ST Paging . . . . . pin@page.stpaging.com
Safaricom . . . . . xxxxxxxxx@safaricomsms.com
Satelindo GSM . . . . . xxxxxxxxx@satelindogsm.com
Satellink . . . . . xxxxxxxxx.pageme@satellink.net
Simple Freedom . . . . . xxxxxxxxx@text.simplefreedom.net
Skytel Pagers . . . . . xxxxxxxxx@ email.skytel.com
Skytel Pagers . . . . . xxxxxxxxx@skytel.com
Smart Telecom . . . . . xxxxxxxxx@mysmart.mymobile.ph
Southern LINC. . . . . xxxxxxxxx@page.southernlinc.com
Southwestern Bell . . . . . xxxxxxxxx@email.swbw.com
Sprint PCS . . . . . xxxxxxxxx@messaging.sprintpcs.com
Sprint . . . . . xxxxxxxxx@sprintpaging.com
SunCom . . . . . xxxxxxxxx@tms.suncom.com
Surewest Communications . . . . . xxxxxxxxx@mobile.surewest.com
T-Mobile . . . . . xxxxxxxxx@tmomail.net
TIM . . . . . xxxxxxxxx@timnet.com
TSR Wireless . . . . . xxxxxxxxx@alphame.com
TSR Wireless . . . . . xxxxxxxxx@beep.com

Teletouch . . . . . xxxxxxxxx@pageme.teletouch.com
Telus . . . . . xxxxxxxxx@msg.telus.com
The Indiana Paging Co . . . . . xxxx@pager.tdspager.com
Triton . . . . . xxxxxxxxx@tms.suncom.com
US Cellular . . . . . xxxxxxxxx@email.uscc.net
USA Mobility. . . . . xxxxxxxxx@mobilecomm.net
Unicel . . . . . xxxxxxxxx@utext.com
Verizon PCS . . . . . xxxxxxxxx@myvzw.com
Verizon Pagers . . . . . xxxxxxxxx@myairmail.com
Verizon . . . . . .xxxxxxxxx@vtext.com
Virgin Mobile. . . . . xxxxxxxxx@vmobl.com
Virgin Mobile. . . . . xxxxxxxxx@vxtras.com
WebLink Wireless . . . . . xxxxxxxxx@pagemart.net
West Central Wireless . . . . . xxxxxxxxx@sms.wcc.net
Western Wireless. . . . . xxxxxxxxx@cellularonewest.com
Wyndtell . . . . . xxxxxxxxx@wyndtell.com

ALARM ACKNOWLEDGMENT VIA E-MAIL

An alarm message received via e-mail can be acknowledged by simply selecting "reply" to the original message, as long as the original message is contained in the reply. If not, simply reply with the 4-digit acknowledgment code provided at the end of the message. Once received, this will cancel alarm message delivery to all destinations configured with higher tier levels, and the web page History will show that you have acknowledged the alarm.

ADDITIONAL INFORMATION

You can use tier escalation to organize the destination delivery. Set each destination to its own tier level and set the delay to **two** minutes. In this case a new message will be sent every two minutes to the next tier level.

Rearranging the destination order can be done simply by changing the Tier Levels.

CHAPTER 9: OPERATION

After installation and programming have been completed, the Cell682 is fully operational. This chapter explains how the Cell682 operates.

PART ONE: ALARM NOTIFICATION AND ACKNOWLEDGMENT

There are 3 stages to a complete alarm event: 1) Alarm Recognition, 2) Alarm Notification, and 3) Acknowledgment.

Note that not all fault conditions will go through each stage. For example, some may not meet the recognition time.

ALARM RECOGNITION

1) The Cell682 monitors 8 dry contact inputs, 6 analog inputs, main power, and battery backup. When the status of an input changes or exceeds user-programmed limits, it causes a fault condition.
2) If the fault condition lasts long enough to meet its programmed recognition time, the fault condition becomes an alarm and the Cell682 begins the alarm notification sequence.

ALARM NOTIFICATION

The Cell682 can send alarms via Voice phone call, E-mail, Alphanumeric pager, or Text message to wireless (cell) phone.

DIALOUT NOTE: CALL PROGRESS

The Cell682 monitors call progress when dialing out in voice mode. If it dials out and encounters a busy signal or no answer it will wait about a minute and try again up to 3 times. If the call is answered by an answering machine or voice mail system the alarm message will likely be recorded , however, since the alarm was not acknowledged the system will make additional calls.

ALARM NOTIFICATION—VOICE

When dialing out to a destination programmed as “voice,” the Cell682 waits for the phone to be answered, then recites its identification message, then the message identifying the input that has gone into alarm.

Below is an example of what the Cell682 would say during a typical ‘voice’ notification:

```
CELL682 Alarm Message
High temperature alarm at “Jim’s Ice Cream”
Pin Number “1234”
“Freezer #5” is 38 degrees Fahrenheit
Level crossed limit of 36 degrees
To acknowledge press 1 Alarm Notification—E-mail
```

When sending an alarm message via e-mail the Cell682 will compose a text message based on the Unit's name, PIN, Input name, Input type, current value, and alarm limit (where applicable). A sample alarm message is shown below:

To: derek@mycompany.com
From: 1520@cell682.com

Contact ALARM at Oak Station CELL682#1520
Contact 1 Security is in alarm
To acknowledge send 1202

ALARM NOTIFICATION–ALPHANUMERIC PAGER

When sending an alarm message to an Alphanumeric pager, the Cell682 leaves a text message on the display of the pager. A sample is shown below:

Low 4-20ma ALARM at Sensaphone Cell682 #250
2 Water Level is now 21
Level crossed limit of 20
To acknowledge send 2002

ALARM NOTIFICATION—TEXT MESSAGE TO CELL PHONE

When sending an alarm text message to a cell phone the Cell682 leaves a message on the display of the phone. A sample is shown below

Low 4-20mA ALARM at Sensaphone Cell682 #250
2 Water Level is now 21
Level crossed limit of 20
To acknowledge send 2002

TIER DELAY

You can group destinations into tiers and then program a delay time until the next tier gets called. This allows you to contact your primary personnel first and, if necessary, escalate the calling to the next level. Up to 24 tiers can be configured. The Cell682 will start sending alarm messages to all destinations programmed in Tier 1. If the alarm is acknowledged, it will halt the notification process for that alarm and no additional alarm messages will be delivered. If all of the Tier 1 destinations have been sent the alarm message and no acknowledgement was received, the unit will wait the programmed *Tier Delay Time* and then start sending the alarm to the destinations in the next Tier. An example is described below:

Tier 1 destinations:	Tier 2 destinations:	Tier 3 destinations:
Chuck	Janet	Morton
Mary	George	Zach
Sue	Ron	Tony
Derek	Jason	
Dave	Carmen	

Tier Delay Time: 60 minutes

An alarm occurs at 8:00pm

The Cell682 starts sending alarm messages to members of Tier 1.

No one acknowledges the alarm.

At 9:00pm the Tier delay has expired and the unit begins to send alarm messages to members of Tier 2.

At 9:30pm the Cell682 receives an acknowledgement message and the unit stops the notification process.

The people in Tier 3 do not get contacted.

ALARM ACKNOWLEDGMENT

Acknowledging an alarm will halt the alarm notification process to the destination being called and also to destinations set to higher tier levels. Voice notification alarms must be acknowledged during the original phone call. E-mail, Alphanumeric pager, and Cell phone alarms can be acknowledged by replying back to the original alarm message or by sending the unit a message with the alarm acknowledgment code. The sections below detail the procedure to acknowledge an alarm.

ALARM ACKNOWLEDGMENT—VOICE NOTIFICATION

CELL682 Alarm Message

High temperature alarm at “Jim’s Ice Cream” <unit name>

Pin Number “1234”

“Freezer #5” <input name> is 38 degrees Fahrenheit

Level crossed limit of 36 degrees

To acknowledge press 1

To acknowledge the alarm you must press “1” when prompted. The Cell682 will respond by saying: “Alarm acknowledged”. If the Touch-Tone acknowledgment code is not received the Cell682 will say “error, not acknowledged” and repeat the message 2 more times. If no acknowledgment is received the system will wait a few minutes and then call again. The system will call up to 3 times per telephone number.

Note: An alarm cannot be acknowledged using a pulse (rotary) telephone.

ALARM ACKNOWLEDGMENT—ALPHANUMERIC PAGER

When sending an alarm message to an Alphanumeric pager, the Cell682 leaves a text message on the display of the pager. If you have a two-way alphanumeric pager you can acknowledge the alarm by replying to the original message with the alarm acknowledgement code. For example, if the acknowledgement code was 1503, you would simply reply back with "1503." If you do not have a two-way pager then you can send the Cell682 an e-mail using either a computer or a cell phone. The e-mail address of your Cell682 is PIN@cell682.com, where you would substitute the word PIN with your PIN number. In the message area simply send the unit the alarm acknowledgement code.

ALARM ACKNOWLEDGMENT—TEXT MESSAGE TO CELL PHONE

When sending an alarm message to a cell phone the Cell682 leaves a text message on the display of the phone. You can acknowledge the alarm by sending an email reply back to the Cell682 with the alarm acknowledgement code. For example, if your alarm acknowledgement code was 1107, you would simply reply back with "1107." Alternatively you can send the Cell682 an e-mail using a computer. The e-mail address of your Cell682 is PIN@cell682.com, where you would substitute the word PIN with your PIN number. In the message area simply send the alarm acknowledgement code.

ALARM ACKNOWLEDGMENT—AUTOMATIC

The Cell682 will acknowledge an alarm itself (automatically) if all of the destinations have been contacted and no acknowledgement was received.

PART TWO: STATUS REQUEST

You can request a status report from your Cell682 by sending it a command via e-mail. When the unit receives the command it will assemble a status report and send it back to the originating e-mail address. Only inputs that are *enabled* will be included in the report. If alarm monitoring is not enabled for a particular input, its status will be displayed as *disabled*. To request the status report you need the unit's password and PIN. The e-mail format to request a status report is shown below:

To: *PIN*@cell682.com {replace *PIN* with your unit's PIN number}
Subject:
Message:
p *password* {replace *password* with your unit's password}
gst

A sample e-mail Status Report is shown below:

D1: Pump 1 Run 243:33:12 1591 OK
D2: Pump 2 Run 012:30:00 1295 OK
D3: High Water 000:00:00 0 OK
D4: Door sensor 000:00:00 0 Alarm
D5: Pump 1 fault 000:00:00 0 OK
D6: Pump 2 fault 000:00:00 0 OK
D7: Gen. Run 000:57:49 2 Disabled
D8: Low Fuel 000:00:00 0 OK
A1: Well Level 16 OK
A2: Outside Temp 78 F Disabled
A3: Cabinet Temp 86 F OK
A4: Fuel Level 38 OK
A5: Battery Temp 81 F OK
A6: Flow Rate 33 OK
B: Battery 13.50v OK
P: Power 16.82v OK
O1: Pump 1 On 015:54:44 1573 OK
O2: Pump 2 Off 012:30:00 1295 OK

CHAPTER 10: CELL682 WEB PAGE

The Cell682 Web Page is where you can check status, make programming changes, and even control outputs from any internet connected computer.

Once the Cell682 is installed and turned on you can go to *www.Cell682.com*, enter your *PIN* and *Password (default password is cell682)*, and click *Login*. The web page for your Cell682 will be displayed. The web page presents a view of the system which is very similar to the Cell682 PC Software, except for the fact that it is a snapshot of information from a specific point in time—it is not updating in real-time. To retrieve the latest values you must click either the *Status Refresh or Programming Refresh* links. For security purposes be sure to change your password.

Note: It is highly recommended that if at any time you make any programming changes locally (at the unit via the serial port) that you click the *Programming Refresh* link on the web page soon thereafter, to ensure that the information you are viewing is up to date. This will also ensure that the alarm history information will also be accurate.

STATUS REFRESH

You can retrieve the latest input and output values by clicking the *Status Refresh* link. This will send a message to the Cell682 requesting the latest input and output status information. When the unit receives the request it will immediately send back a reply. During this waiting period the web page will display the input and output values in green italics until the updated information returns. At the top of the screen is a time-stamp which indicates the date and time of the last update.

PROGRAMMING REFRESH

The *Programming Refresh* command will refresh all Cell682 programming as well as input/output status. You only need to click this button if you believe that programming changes may have occurred locally, at the unit, and you want to refresh the information on the web server.

PROGRAMMING VIA THE WEB PAGE

You can change any parameter in your Cell682 from the web page, just as you would using the Cell682 PC Software. All programmable items will appear as Blue links. For the inputs you can click on any item for that channel and the respective programming screen will appear. If you change an item and click *OK*, the change will be sent to your unit. This will take a few minutes to process.

Similarly you can change Output programming, Notification programming, and Machine-to-machine programming.

SWITCHING OUTPUTS VIA THE WEB PAGE

To switch an output, Login to the web page and click *Outputs*. Next, click on the Output number you want to switch. On the programming screen, locate the *State* field and select On or Off, then click OK. The command to switch the output will be sent to your unit. Note that this may take 1–2 minutes.

ALARM ACKNOWLEDGEMENT HISTORY

An alarm history log is available on the web page to provide details on alarms that have occurred and whom acknowledged them. The log can be queried by entering a start and end date range, or by selecting one of the *QuickDates* options. Note that the time stamps appearing on the web page do not indicate when the alarm occurred, but rather the time that they were received by the web server.

CHAPTER 11: TESTING THE CELL682

It is extremely important that you test the system after installation to make sure that it is working properly and that all programming is correct. In addition, it is highly recommended that you test and/or verify proper operation on a weekly basis to ensure that the system continues to function as required. *(See Appendix A.)* The following items should be tested:

- Notification to all destinations to make sure that each one is programmed correctly and that the messages are actually delivered.
- Input testing to make sure that the system is reading them correctly and that when a fault occurs the system responds appropriately.
- Output testing to make sure they are wired correctly and that they switch on and off when instructed.
- Control programming—Local control, Machine-to-machine, or Pump control—to make sure that the system is functioning properly, as required for your application.

NOTIFICATION TESTING

Create an alarm and confirm that all destinations receive the alarm message. This can be done by forcing an input into alarm, by temporarily adjusting an alarm limit, or by changing the normality of a Dry Contact input. The Alarm LED on the front of the unit will begin blinking when an alarm has occurred. Be sure to disconnect from the serial port after creating the alarm, otherwise the notifications will not be sent. After confirming that all notification messages were delivered, correct the alarm condition and/or adjust your programming as required.

INPUT TESTING

Check the current value of all of the programmed Dry Contact and Analog Inputs. Make sure that the values being displayed are correct.

For Dry Contact inputs, momentarily reverse the input condition to verify that the unit recognizes the change of state. For example, if you have a normally open sensor connected to Dry Contact #1, force that sensor closed and verify that the unit displays the value as closed.

For analog inputs, verify that the input reading matches the entity being measured. For example, for temperature inputs confirm that the unit is reporting the correct temperature.

For 4–20mA inputs, confirm that the level or value being displayed in the Cell682 matches the actual conditions being measured.

OUTPUT TESTING

Confirm that the power limitations of the outputs will not be exceeded. The Cell682 outputs are rated for a maximum of 0.3A at 120VAC or 1.0A at 24VDC. Test the outputs by switching them on and off manually and confirming that the device being controlled turns on and off. The Output LEDs on the front of the unit should also turn on and off.

CONTROL PROGRAMMING

For applications that utilize control programming it is important to test all scenarios that may affect system operation. This means you should test your system under normal operating conditions as well as abnormal (or failure) conditions to make sure that you have designed your system to operate under the worst-case scenario.

Note that Local and Machine-to-Machine control will not execute while you are connected locally.

To test Local control operation, force input conditions as necessary to activate the output(s). Confirm that the input-to-output control logic is executing properly. Test each programmed control algorithm separately to make sure that each one is functioning as desired.

To test Machine-to-Machine control, force input conditions as necessary to activate the output(s) on your remote Cell682 device(s). Confirm that the outputs on the remote unit(s) have turned on or off as instructed. Test each programmed control algorithm separately to make sure they are all functioning. Have the system go through a complete automated control cycle of your system to confirm that the unit and its programming are operating as intended.

PUMP CONTROL

To test Pump Control using float switches, force the float switch inputs open or closed as necessary, to make the output(s) turn on or off. In a Drain application the first pump would turn on if the Pumps-Off and Lead float switches were closed. The second pump would turn on if the Lag float switch also closed. Both pumps would then turn off when all three float switches opened. In a fill application, the first pump would turn on when the Pumps-Off and Lead floats opened. The second pump would turn on when the Lag float also opens. Both Pumps would turn off when all three floats closed.

To test Pump Control using a level transducer you can temporarily force the input level to a certain value by adjusting the calibration for the Analog Input.

In a drain application, force the input to be above the Lead level and the first pump should turn on. If you then set the input above the Lag level, the second pump should also turn on. Setting the input below the Pumps-Off setting will turn both pumps off. In a fill application, setting the input below the lead level will turn the first pump on. Setting the input below the Lag level will turn on the second pump. Setting the input above the pumps-Off level will turn off both pumps.

Once you have confirmed that the Cell682 is controlling the system properly, allow the system to operate automatically. Observe a complete Drain or Fill cycle and verify that the system is operating as required.

APPENDIX A: CHECKING YOUR CELL682 FOR PROPER OPERATION

We recommend that you test your Cell682 weekly to be sure it is functioning properly. This will ensure that when a problem arises the Cell682 will be ready to alert the appropriate personnel. A blank Test Log is included at the back of this manual.

There are several tests to be performed:

1. Request a Status Report from the unit by sending it an e-mail message and verifying the reply. This will test the unit's ability to receive and send a message. It will also verify that all of the inputs are reading properly, the alarm conditions are OK, the electricity is on, and the battery is OK.
2. Create an alarm on each input by tripping all connected sensors. This will verify that each input is being recognized by the unit and that it is programmed properly.

Temperature sensors: Heat or cool the sensor.

Motion sensors: Have someone walk in front of the sensor.

Door and window sensors: Open the door or window.

Water sensors: Apply a small amount of water beneath the sensor or use a wet towel and touch it to the sensor probes.

Humidity sensors: Raise the humidity around the sensor by holding a cup of very hot water beneath it.

4–20mA Transducers: Verify that the Cell682 is reading the proper level by measuring the monitored quantity using alternative methods.

Allow the unit to send its alarm message to all programmed contacts. This will make sure that the Cell682 is programmed properly. It will also prepare personnel to respond appropriately when they receive a call from the Cell682.

3. Test the battery by unplugging the AC adapter and making sure that the Cell682 continues to function. Check the LEDs to make sure that the Power LED starts to blink and the Battery LED glows steadily. Keep the AC adapter unplugged so that a Power Failure alarm occurs. Allow the unit to send its alarm message to all programmed contacts while running on battery backup. Plug in the AC adapter after the unit has finished sending all of its messages.
4. If you require assistance, contact Sensaphone Technical Support at (610) 558-2700.

APPENDIX B: TROUBLESHOOTING

I CAN'T COMMUNICATE WITH MY UNIT LOCALLY.

- Make sure you have entered the proper PIN.
- Make sure the cable is connected from your computer to the Cell682.
- Make sure you have the right Com port selected (*typically 1 or 2*).
- Make sure the unit is receiving power.

I CAN'T ACCESS MY UNIT ON THE WEB PAGE.

- Have you entered the proper *PIN* and *Password*? The default password is "cell682"

WHY IS THE 'IN RANGE' LED OFF?

- If the unit is not within range of the wireless network the LED will not turn on.
- It typically takes 1-2 minutes from power-up for the Cell682 to recognize the wireless network and turn on the LED.
- Make sure the unit is receiving power.

WHY IS THE 'REGISTERED' LED OFF?

- If the IN RANGE LED is lit but the REGISTERED LED is not, then the unit is not activated yet.
- Make sure the unit is receiving power.

WHY IS THE 'BATTERY OK' LED OFF?

- There is no battery connected.
- The battery voltage is low.

WHY IS THE 'POWER OK' LED OFF?

- The main power has failed and the unit is running batteries.
- The voltage at the Vin terminals is low.

WHY IS THE 'ALARM' LED BLINKING?

- There is an unacknowledged alarm.

WHY IS THE 'ALARM' LED ON?

- There is an alarm but it has been acknowledged.

WHY WON'T THE UNIT SEND ME ALARM MESSAGES?

- The Cell682 will not send any alarm messages if you are connected locally.
- There are no destinations programmed.
- None of the destinations are enabled.
- The unit is not activated on the wireless network
- The destinations are not programmed correctly.
- There are no unacknowledged alarms.

MY UNIT WON'T MAKE A VOICE CALL.

- The telephone number is programmed incorrectly.
- The Cell682 will not send any alarm messages if you are connected locally.
- There are no destinations programmed.
- None of the destinations are enabled.
- The unit is not activated on the wireless network
- There are no unacknowledged alarms.

MY UNIT WON'T SEND A TEXT MESSAGE TO MY CELL PHONE OR ALPHANUMERIC PAGER.

- The Destination is programmed incorrectly. You must use the e-mail address format for your cellular or paging provider as specified in chapter 8.
- The Destination type is set incorrectly. It should be set to Internet E-mail Address.
- The Cell682 will not send any alarm messages if you are connected locally.
- There are no destinations programmed.
- None of the destinations is enabled.
- The unit is not activated on the wireless network
- There are no unacknowledged alarms.

WHY DOES THE UNIT CALL PEOPLE EVEN AFTER I ACKNOWLEDGED THE ALARM?

- When an alarm occurs the unit will begin to sequentially broadcast all alarm messages for the first Tier. Depending on how quickly they get dispatched from the messaging center its possible for additional calls to be made even after the alarm has been acknowledged. Once the message is received at the messaging center it will be called regardless of acknowledgement.

MY UNIT WON'T EXECUTE A LOCAL MACHINE-TO-MACHINE COMMAND.

- Machine-to-machine commands will not execute while you are connected locally.
- The output you are trying to switch is not set to manual mode.
- The input condition for the machine-to-machine command is not being met.

MY UNIT WON'T EXECUTE A REMOTE MACHINE-TO-MACHINE COMMAND.

- Machine-to-machine commands will not execute while you are connected locally.
- The output on the remote unit you are trying to switch is not set to manual mode.
- The input condition for the machine-to-machine command is not being met.
- The PIN and Password for the remote unit is programmed incorrectly.

MY CELL682 ISN'T DISPLAYING THE CORRECT VALUE FROM MY 4–20MA TRANSDUCER.

- The analog input jumper isn't set to the 4–20mA position.
- The analog input "type" isn't set to 4–20mA in the software.
- The transducer is not wired correctly.
- The transducer is not calibrated for the desired measurement range.
- The analog input table values aren't programmed to the calibrated range of the transducer.
- The transducer is not compatible with single-ended inputs therefore an isolation device is required.

MY TEMPERATURE SENSOR ISN'T DISPLAYING THE CORRECT VALUE.

- The analog input jumper isn't set to the Temperature position.
- The analog input "type" isn't set to Temperature in the software
- The temperature sensor isn't a compatible 2.8K or 10K thermistor.
- The temperature sensor isn't wired correctly.

WHY DON'T THE VALUES DISPLAYED ON THE WEB PAGE MATCH THE VALUES DISPLAYED IN THE CELL682 SOFTWARE?

- The web page displays a snapshot of the values at a particular moment in time. It does not display real-time values, as is the case when connected locally through the Cell682 software.
- Click the Status Update button on the web page to retrieve a current snapshot.

WHY CAN'T I GET PUMP CONTROL TO WORK?

- The Output(s) are not set to Pump Control mode.
- The Pump Control parameters are programmed incorrectly.
- The level transducer is not wired to analog input #6.
- The level transducer is not reading the proper values.

- The float switches are not wired to Dry Contact inputs #6, #7, and #8.
- The float switches are not Normally Open.
- The Lead, Lag, and Pumps-Off float switches are not wired to the proper inputs.

APPENDIX C: THERMISTOR TABLE

10K THERMISTOR DATA

Degrees Celsius	Resistance (Ohms)
-30	135.2K
-20	78.91K
-10	47.54
0	29.49K
10	18.79K
20	12.25K
30	8,194
40	5,592
50	3,893
60	2,760
70	1,990

2.8K THERMISTOR DATA

Degrees Celsius	Resistance (Ohms)
-50	187,625
-40	94,206
-30	49,549
-20	27,180
-10	15,491
0	9,142
10	5,572
20	3,498
30	2,256
40	1,491
50	1,009
60	697
70	490
80	351

APPENDIX D: CELL682 SPECIFICATIONS

ENVIRONMENTAL INPUTS

Number of Dry Contact Inputs: 8

Dry Contact Input Types: N.O./N.C. contact, pulse count, equipment run time

Dry Contact Input Electrical Characteristics: 47KΩ to 5V

Number of Analog Inputs: 6

Analog Input Types: 2.8K thermistor (-100°F to 124°F / -80°C to 55°C), 10K thermistor (-60°F to 175°F / -51°C to 79°C) and 4–20mA (-16,300 to 16,300)

Analog Input Electrical Characteristics: 22KΩ to 2.5V (temperature) and 250 Ohms to ground (4–20mA)

Input Connector: terminal block

A/D Converter Resolution: 10 bits ±2 LSB

Input Protection: Metal Oxide Varistors and fast acting diode clamps

RELAY OUTPUTS

Number of Relay Outputs: 2

Rating: 0.3A 120VAC / 1.0A 24VDC Maximum

Type: SPDT Form-C Latching

Relay Output Connector: terminal block

LED INDICATORS

Function: Alarm, Radio Registered, Radio In Range, Battery OK, Power OK, Output#1, Output #2

POWER SUPPLY

Power Supply: 18VDC 800mA power transformer

Power Consumption: 50mA typical, 700mA burst (radio transmit)

Power Protection: Metal Oxide Varistor

Battery Backup/Charger: Compatible with 12V sealed gel-cell, 2.2AH

ENVIRONMENTAL

Operating Temperature: -22° to 140°F (-30° to 60°C)

Operating Humidity: 0 to 90% RH non-condensing

Storage Temperature: -22° to 158°F (-30° to 70°C)

PHYSICAL: CELL682 UNIT IN NEMA-4 ENCLOSURE

Dimensions: 12”h x 8”w x 6”d (30.5 x 20.3 x 15.2 cm)

Weight: 8 lbs. (2.7kg)

Specifications subject to change without notice.

APPENDIX E: REPLACING THE BACKUP BATTERY

The back-up battery will provide about 3–5 years of service life depending on usage and temperature. After 5 years (or when backup time is insufficient) the battery should be replaced. Replacement batteries can be ordered from Sensaphone. To replace the battery, follow the instructions below:

1. Disconnect the red battery wire and cover the bare wire with insulating electrical tape.
2. Disconnect the black battery wire and cover the bare wire with insulating electrical tape.
3. Unplug the power transformer.
4. Loosen the compression wiring connectors and allow 6-10" of cable slack to come into the enclosure. This will make it easier to turn the panel over.
5. Remove the four screws securing the Cell682 housing to the back panel and carefully remove the Cell682.
6. Remove the connectors from the battery by carefully pulling and wiggling the connectors from the battery tabs.
7. Remove the screws holding the battery bracket and remove the bracket.
8. Dispose of/recycle the old battery following local recycling regulations for lead batteries.
9. Insert the new replacement battery into the slot and replace the bracket. Secure the bracket with the two screws.
10. Attach the battery connector at the end of the BLACK wire to the -(negative) terminal of the new battery.
11. Attach the battery connector at the end of the RED wire to the +(positive) terminal of the new battery.
12. Place the Cell682 over the four metal stand-offs and re-attach the four screws.
13. Readjust the cables through the compression connectors and secure the fittings.
14. Plug the power transformer into the outlet.
15. Connect the Black battery wire to the "BAT -" terminal.

16. Connect the Red battery wire to the “BAT +” terminal.

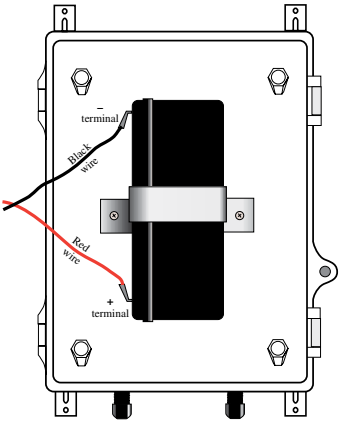

Figure 1: Battery placement

APPENDIX F: OPTIONAL ACCESSORIES

The sensors and accessories listed below are available from Sensaphone and represent the most commonly used devices. Other dry contact sensors or 4–20mA transducers, designed for more specialized applications, may also be used. Commercial or industrial electrical supply houses can provide devices to monitor virtually any condition. For further information, contact a Sensaphone Sales Associate toll-free at 1-877-373-2700.

PART .....PART/NUMBER DESCRIPTION

FGD-0006 ..... Magnetic Reed Switch

FGD-0007 ..... Passive Infra-Red Detector

FGD-0010 ..... 50' 2-conductor #22AWG shielded accessory Cable

FGD-0013 ..... Spot Water Detector

FGD-0022 ..... Temp° Alert

FGD-0027 ..... Humidistat

FGD-0049 ..... Smoke Detector with Built-in Relay

FGD-0052 ..... Humidity Transmitter

FGD-0054 ..... Power-Out Alert™

FGD-0056 ..... Zone Water Detector w/Water Rope

FGD-0063 ..... 10' additional Water Rope for FGD-0056

FGD-0067 ..... Surge Suppressor

FGD-0101 ..... 2.8K Weatherproof Temperature Probe

FGD-0102 ..... 10K Weatherproof Temperature Probe

FGD-0104 ..... 10K Outdoor Air Weatherproof Temperature Sensor

FGD-0205 ..... Multipoint Wireless I/O System

FGD-CELL-ANT . Outdoor GSM Antenna with 16' Cable

APPENDIX G: RETURNING YOUR CELL682 FOR REPAIR

In the event that the Cell682 does not function properly, we suggest that you do the following:

1. Record your observations regarding the Cell682's malfunction.
2. Call Sensaphone Technical Support toll-free at 1-877-373-2700 or e-mail support@sensaphone.com prior to sending the unit to Sensaphone for repair. Our product support specialists are able to diagnose and correct many unit setup and programming problems over the phone.

If the unit must be sent to Sensaphone for servicing, please do the following:

1. Unplug the power supply, disconnect the battery, and disconnect all wiring.
2. Carefully pack the unit to avoid damage in transit. Use the original container (if available) or a sturdy shipping box.
3. To avoid shipping delays, you must include the following information:

   a) Your name, address and telephone number.

   b) A note explaining the problem.
4. Ship your package to the address below:

   SERVICE DEPARTMENT

   Sensaphone.

   901 Tryens Road

   Aston, PA 19014
5. Ship prepaid and insured via UPS or US Mail to ensure a traceable shipment with recourse for damage or replacement.

Test Log

Date	Inputs		Dialout		Call-In		Battery				Tested By
	Pass ☐	Fail ☐	Pass ☐	Fail ☐	Pass ☐	Fail ☐	Pass ☐	Fail ☐	Pass ☐	Fail ☐	
	Pass ☐	Fail ☐	Pass ☐	Fail ☐	Pass ☐	Fail ☐	Pass ☐	Fail ☐	Pass ☐	Fail ☐	
	Pass ☐	Fail ☐	Pass ☐	Fail ☐	Pass ☐	Fail ☐	Pass ☐	Fail ☐	Pass ☐	Fail ☐	
	Pass ☐	Fail ☐	Pass ☐	Fail ☐	Pass ☐	Fail ☐	Pass ☐	Fail ☐	Pass ☐	Fail ☐	
	Pass ☐	Fail ☐	Pass ☐	Fail ☐	Pass ☐	Fail ☐	Pass ☐	Fail ☐	Pass ☐	Fail ☐	
	Pass ☐	Fail ☐	Pass ☐	Fail ☐	Pass ☐	Fail ☐	Pass ☐	Fail ☐	Pass ☐	Fail ☐	
	Pass ☐	Fail ☐	Pass ☐	Fail ☐	Pass ☐	Fail ☐	Pass ☐	Fail ☐	Pass ☐	Fail ☐	
	Pass ☐	Fail ☐	Pass ☐	Fail ☐	Pass ☐	Fail ☐	Pass ☐	Fail ☐	Pass ☐	Fail ☐	
	Pass ☐	Fail ☐	Pass ☐	Fail ☐	Pass ☐	Fail ☐	Pass ☐	Fail ☐	Pass ☐	Fail ☐	
	Pass ☐	Fail ☐	Pass ☐	Fail ☐	Pass ☐	Fail ☐	Pass ☐	Fail ☐	Pass ☐	Fail ☐	
	Pass ☐	Fail ☐	Pass ☐	Fail ☐	Pass ☐	Fail ☐	Pass ☐	Fail ☐	Pass ☐	Fail ☐	
	Pass ☐	Fail ☐	Pass ☐	Fail ☐	Pass ☐	Fail ☐	Pass ☐	Fail ☐	Pass ☐	Fail ☐	
	Pass ☐	Fail ☐	Pass ☐	Fail ☐	Pass ☐	Fail ☐	Pass ☐	Fail ☐	Pass ☐	Fail ☐	
	Pass ☐	Fail ☐	Pass ☐	Fail ☐	Pass ☐	Fail ☐	Pass ☐	Fail ☐	Pass ☐	Fail ☐	
	Pass ☐	Fail ☐	Pass ☐	Fail ☐	Pass ☐	Fail ☐	Pass ☐	Fail ☐	Pass ☐	Fail ☐	
	Pass ☐	Fail ☐	Pass ☐	Fail ☐	Pass ☐	Fail ☐	Pass ☐	Fail ☐	Pass ☐	Fail ☐	
	Pass ☐	Fail ☐	Pass ☐	Fail ☐	Pass ☐	Fail ☐	Pass ☐	Fail ☐	Pass ☐	Fail ☐	
	Pass ☐	Fail ☐	Pass ☐	Fail ☐	Pass ☐	Fail ☐	Pass ☐	Fail ☐	Pass ☐	Fail ☐	
	Pass ☐	Fail ☐	Pass ☐	Fail ☐	Pass ☐	Fail ☐	Pass ☐	Fail ☐	Pass ☐	Fail ☐	
	Pass ☐	Fail ☐	Pass ☐	Fail ☐	Pass ☐	Fail ☐	Pass ☐	Fail ☐	Pass ☐	Fail ☐	

Date	Inputs		Dialout		Call-In		Battery				Tested By
	Pass ☐	Fail ☐	Pass ☐	Fail ☐	Pass ☐	Fail ☐	Pass ☐	Fail ☐	Pass ☐	Fail ☐	
	Pass ☐	Fail ☐	Pass ☐	Fail ☐	Pass ☐	Fail ☐	Pass ☐	Fail ☐	Pass ☐	Fail ☐	
	Pass ☐	Fail ☐	Pass ☐	Fail ☐	Pass ☐	Fail ☐	Pass ☐	Fail ☐	Pass ☐	Fail ☐	
	Pass ☐	Fail ☐	Pass ☐	Fail ☐	Pass ☐	Fail ☐	Pass ☐	Fail ☐	Pass ☐	Fail ☐	
	Pass ☐	Fail ☐	Pass ☐	Fail ☐	Pass ☐	Fail ☐	Pass ☐	Fail ☐	Pass ☐	Fail ☐	
	Pass ☐	Fail ☐	Pass ☐	Fail ☐	Pass ☐	Fail ☐	Pass ☐	Fail ☐	Pass ☐	Fail ☐	
	Pass ☐	Fail ☐	Pass ☐	Fail ☐	Pass ☐	Fail ☐	Pass ☐	Fail ☐	Pass ☐	Fail ☐	
	Pass ☐	Fail ☐	Pass ☐	Fail ☐	Pass ☐	Fail ☐	Pass ☐	Fail ☐	Pass ☐	Fail ☐	
	Pass ☐	Fail ☐	Pass ☐	Fail ☐	Pass ☐	Fail ☐	Pass ☐	Fail ☐	Pass ☐	Fail ☐	
	Pass ☐	Fail ☐	Pass ☐	Fail ☐	Pass ☐	Fail ☐	Pass ☐	Fail ☐	Pass ☐	Fail ☐	
	Pass ☐	Fail ☐	Pass ☐	Fail ☐	Pass ☐	Fail ☐	Pass ☐	Fail ☐	Pass ☐	Fail ☐	
	Pass ☐	Fail ☐	Pass ☐	Fail ☐	Pass ☐	Fail ☐	Pass ☐	Fail ☐	Pass ☐	Fail ☐	
	Pass ☐	Fail ☐	Pass ☐	Fail ☐	Pass ☐	Fail ☐	Pass ☐	Fail ☐	Pass ☐	Fail ☐	
	Pass ☐	Fail ☐	Pass ☐	Fail ☐	Pass ☐	Fail ☐	Pass ☐	Fail ☐	Pass ☐	Fail ☐	
	Pass ☐	Fail ☐	Pass ☐	Fail ☐	Pass ☐	Fail ☐	Pass ☐	Fail ☐	Pass ☐	Fail ☐	
	Pass ☐	Fail ☐	Pass ☐	Fail ☐	Pass ☐	Fail ☐	Pass ☐	Fail ☐	Pass ☐	Fail ☐	
	Pass ☐	Fail ☐	Pass ☐	Fail ☐	Pass ☐	Fail ☐	Pass ☐	Fail ☐	Pass ☐	Fail ☐	
	Pass ☐	Fail ☐	Pass ☐	Fail ☐	Pass ☐	Fail ☐	Pass ☐	Fail ☐	Pass ☐	Fail ☐	
	Pass ☐	Fail ☐	Pass ☐	Fail ☐	Pass ☐	Fail ☐	Pass ☐	Fail ☐	Pass ☐	Fail ☐	
	Pass ☐	Fail ☐	Pass ☐	Fail ☐	Pass ☐	Fail ☐	Pass ☐	Fail ☐	Pass ☐	Fail ☐	

Date	Inputs		Dialout		Call-In		Battery				Tested By
	Pass ☐	Fail ☐	Pass ☐	Fail ☐	Pass ☐	Fail ☐	Pass ☐	Fail ☐	Pass ☐	Fail ☐	
	Pass ☐	Fail ☐	Pass ☐	Fail ☐	Pass ☐	Fail ☐	Pass ☐	Fail ☐	Pass ☐	Fail ☐	
	Pass ☐	Fail ☐	Pass ☐	Fail ☐	Pass ☐	Fail ☐	Pass ☐	Fail ☐	Pass ☐	Fail ☐	
	Pass ☐	Fail ☐	Pass ☐	Fail ☐	Pass ☐	Fail ☐	Pass ☐	Fail ☐	Pass ☐	Fail ☐	
	Pass ☐	Fail ☐	Pass ☐	Fail ☐	Pass ☐	Fail ☐	Pass ☐	Fail ☐	Pass ☐	Fail ☐	
	Pass ☐	Fail ☐	Pass ☐	Fail ☐	Pass ☐	Fail ☐	Pass ☐	Fail ☐	Pass ☐	Fail ☐	
	Pass ☐	Fail ☐	Pass ☐	Fail ☐	Pass ☐	Fail ☐	Pass ☐	Fail ☐	Pass ☐	Fail ☐	
	Pass ☐	Fail ☐	Pass ☐	Fail ☐	Pass ☐	Fail ☐	Pass ☐	Fail ☐	Pass ☐	Fail ☐	
	Pass ☐	Fail ☐	Pass ☐	Fail ☐	Pass ☐	Fail ☐	Pass ☐	Fail ☐	Pass ☐	Fail ☐	
	Pass ☐	Fail ☐	Pass ☐	Fail ☐	Pass ☐	Fail ☐	Pass ☐	Fail ☐	Pass ☐	Fail ☐	
	Pass ☐	Fail ☐	Pass ☐	Fail ☐	Pass ☐	Fail ☐	Pass ☐	Fail ☐	Pass ☐	Fail ☐	
	Pass ☐	Fail ☐	Pass ☐	Fail ☐	Pass ☐	Fail ☐	Pass ☐	Fail ☐	Pass ☐	Fail ☐	
	Pass ☐	Fail ☐	Pass ☐	Fail ☐	Pass ☐	Fail ☐	Pass ☐	Fail ☐	Pass ☐	Fail ☐	
	Pass ☐	Fail ☐	Pass ☐	Fail ☐	Pass ☐	Fail ☐	Pass ☐	Fail ☐	Pass ☐	Fail ☐	
	Pass ☐	Fail ☐	Pass ☐	Fail ☐	Pass ☐	Fail ☐	Pass ☐	Fail ☐	Pass ☐	Fail ☐	
	Pass ☐	Fail ☐	Pass ☐	Fail ☐	Pass ☐	Fail ☐	Pass ☐	Fail ☐	Pass ☐	Fail ☐	
	Pass ☐	Fail ☐	Pass ☐	Fail ☐	Pass ☐	Fail ☐	Pass ☐	Fail ☐	Pass ☐	Fail ☐	
	Pass ☐	Fail ☐	Pass ☐	Fail ☐	Pass ☐	Fail ☐	Pass ☐	Fail ☐	Pass ☐	Fail ☐	
	Pass ☐	Fail ☐	Pass ☐	Fail ☐	Pass ☐	Fail ☐	Pass ☐	Fail ☐	Pass ☐	Fail ☐	
	Pass ☐	Fail ☐	Pass ☐	Fail ☐	Pass ☐	Fail ☐	Pass ☐	Fail ☐	Pass ☐	Fail ☐	

Date	Inputs		Dialout		Call-In		Battery				Tested By
	Pass ☐	Fail ☐	Pass ☐	Fail ☐	Pass ☐	Fail ☐	Pass ☐	Fail ☐	Pass ☐	Fail ☐	
	Pass ☐	Fail ☐	Pass ☐	Fail ☐	Pass ☐	Fail ☐	Pass ☐	Fail ☐	Pass ☐	Fail ☐	
	Pass ☐	Fail ☐	Pass ☐	Fail ☐	Pass ☐	Fail ☐	Pass ☐	Fail ☐	Pass ☐	Fail ☐	
	Pass ☐	Fail ☐	Pass ☐	Fail ☐	Pass ☐	Fail ☐	Pass ☐	Fail ☐	Pass ☐	Fail ☐	
	Pass ☐	Fail ☐	Pass ☐	Fail ☐	Pass ☐	Fail ☐	Pass ☐	Fail ☐	Pass ☐	Fail ☐	
	Pass ☐	Fail ☐	Pass ☐	Fail ☐	Pass ☐	Fail ☐	Pass ☐	Fail ☐	Pass ☐	Fail ☐	
	Pass ☐	Fail ☐	Pass ☐	Fail ☐	Pass ☐	Fail ☐	Pass ☐	Fail ☐	Pass ☐	Fail ☐	
	Pass ☐	Fail ☐	Pass ☐	Fail ☐	Pass ☐	Fail ☐	Pass ☐	Fail ☐	Pass ☐	Fail ☐	
	Pass ☐	Fail ☐	Pass ☐	Fail ☐	Pass ☐	Fail ☐	Pass ☐	Fail ☐	Pass ☐	Fail ☐	
	Pass ☐	Fail ☐	Pass ☐	Fail ☐	Pass ☐	Fail ☐	Pass ☐	Fail ☐	Pass ☐	Fail ☐	
	Pass ☐	Fail ☐	Pass ☐	Fail ☐	Pass ☐	Fail ☐	Pass ☐	Fail ☐	Pass ☐	Fail ☐	
	Pass ☐	Fail ☐	Pass ☐	Fail ☐	Pass ☐	Fail ☐	Pass ☐	Fail ☐	Pass ☐	Fail ☐	
	Pass ☐	Fail ☐	Pass ☐	Fail ☐	Pass ☐	Fail ☐	Pass ☐	Fail ☐	Pass ☐	Fail ☐	
	Pass ☐	Fail ☐	Pass ☐	Fail ☐	Pass ☐	Fail ☐	Pass ☐	Fail ☐	Pass ☐	Fail ☐	
	Pass ☐	Fail ☐	Pass ☐	Fail ☐	Pass ☐	Fail ☐	Pass ☐	Fail ☐	Pass ☐	Fail ☐	
	Pass ☐	Fail ☐	Pass ☐	Fail ☐	Pass ☐	Fail ☐	Pass ☐	Fail ☐	Pass ☐	Fail ☐	
	Pass ☐	Fail ☐	Pass ☐	Fail ☐	Pass ☐	Fail ☐	Pass ☐	Fail ☐	Pass ☐	Fail ☐	
	Pass ☐	Fail ☐	Pass ☐	Fail ☐	Pass ☐	Fail ☐	Pass ☐	Fail ☐	Pass ☐	Fail ☐	
	Pass ☐	Fail ☐	Pass ☐	Fail ☐	Pass ☐	Fail ☐	Pass ☐	Fail ☐	Pass ☐	Fail ☐	

Date	Inputs		Dialout		Call-In		Battery				Tested By
	Pass ☐	Fail ☐	Pass ☐	Fail ☐	Pass ☐	Fail ☐	Pass ☐	Fail ☐	Pass ☐	Fail ☐	
	Pass ☐	Fail ☐	Pass ☐	Fail ☐	Pass ☐	Fail ☐	Pass ☐	Fail ☐	Pass ☐	Fail ☐	
	Pass ☐	Fail ☐	Pass ☐	Fail ☐	Pass ☐	Fail ☐	Pass ☐	Fail ☐	Pass ☐	Fail ☐	
	Pass ☐	Fail ☐	Pass ☐	Fail ☐	Pass ☐	Fail ☐	Pass ☐	Fail ☐	Pass ☐	Fail ☐	
	Pass ☐	Fail ☐	Pass ☐	Fail ☐	Pass ☐	Fail ☐	Pass ☐	Fail ☐	Pass ☐	Fail ☐	
	Pass ☐	Fail ☐	Pass ☐	Fail ☐	Pass ☐	Fail ☐	Pass ☐	Fail ☐	Pass ☐	Fail ☐	
	Pass ☐	Fail ☐	Pass ☐	Fail ☐	Pass ☐	Fail ☐	Pass ☐	Fail ☐	Pass ☐	Fail ☐	
	Pass ☐	Fail ☐	Pass ☐	Fail ☐	Pass ☐	Fail ☐	Pass ☐	Fail ☐	Pass ☐	Fail ☐	
	Pass ☐	Fail ☐	Pass ☐	Fail ☐	Pass ☐	Fail ☐	Pass ☐	Fail ☐	Pass ☐	Fail ☐	
	Pass ☐	Fail ☐	Pass ☐	Fail ☐	Pass ☐	Fail ☐	Pass ☐	Fail ☐	Pass ☐	Fail ☐	
	Pass ☐	Fail ☐	Pass ☐	Fail ☐	Pass ☐	Fail ☐	Pass ☐	Fail ☐	Pass ☐	Fail ☐	
	Pass ☐	Fail ☐	Pass ☐	Fail ☐	Pass ☐	Fail ☐	Pass ☐	Fail ☐	Pass ☐	Fail ☐	
	Pass ☐	Fail ☐	Pass ☐	Fail ☐	Pass ☐	Fail ☐	Pass ☐	Fail ☐	Pass ☐	Fail ☐	
	Pass ☐	Fail ☐	Pass ☐	Fail ☐	Pass ☐	Fail ☐	Pass ☐	Fail ☐	Pass ☐	Fail ☐	
	Pass ☐	Fail ☐	Pass ☐	Fail ☐	Pass ☐	Fail ☐	Pass ☐	Fail ☐	Pass ☐	Fail ☐	
	Pass ☐	Fail ☐	Pass ☐	Fail ☐	Pass ☐	Fail ☐	Pass ☐	Fail ☐	Pass ☐	Fail ☐	
	Pass ☐	Fail ☐	Pass ☐	Fail ☐	Pass ☐	Fail ☐	Pass ☐	Fail ☐	Pass ☐	Fail ☐	
	Pass ☐	Fail ☐	Pass ☐	Fail ☐	Pass ☐	Fail ☐	Pass ☐	Fail ☐	Pass ☐	Fail ☐	
	Pass ☐	Fail ☐	Pass ☐	Fail ☐	Pass ☐	Fail ☐	Pass ☐	Fail ☐	Pass ☐	Fail ☐	

APPENDIX C
Suggested Operating Procedures

SUGGESTED OPERATING PROCEDURE

BUILDING 6 AND BUILDING 7

SUB-SLAB DEPRESSURIZATION SYSTEM –

STARTUP MONITORING

TABLE OF CONTENTS

Section **Page**

1 INTRODUCTION 1

1.1 Objective 1

1.2 Equipment 1

2 PROCEDURES 2

2.1 Differential Pressure Measurements – Temporary Monitoring Points 2

2.2 Differential Pressure and Vacuum Measurements – Exterior Monitoring and Extraction Points and Building Interior 3

2.3 Flow Rate, Temperature, and Humidity Measurements 5

2.4 Blower Inspection and Discharge Screening 6

2.5 Extracted Vapor Sample Collection 9

2.6 Indoor Air Sample Collection 10

SUGGESTED OPERATING PROCEDURE

BUILDING 6 AND BUILDING 7
SUB-SLAB DEPRESSURIZATION SYSTEM – STARTUP MONITORING

1 INTRODUCTION

This Suggested Operating Procedures (SOP) document was prepared to direct field personnel in the methods and general procedures for conducting startup monitoring for Sub-Slab Depressurization (SSD) systems located at 369 (Building 7) and 379 (Building 6) North Whisman Road in Mountain View, California (Site).

The Site lies within the Middlefield-Ellis-Whisman (MEW) vapor intrusion (VI) study area, and SSD systems will be installed and operated to minimize the potential VI migration pathway into each of the subject buildings. Design elements of the SSD systems are described in the Building-Specific Vapor Intrusion Control System Remedial Design (Design Report)[1].

1.1 Objective

Startup monitoring procedures will be implemented to monitor that SSD systems perform in accordance with the design criteria identified in the Design Report, and are intended to provide advanced detection of problems, minimize the need for major maintenance, and minimize the potential for system malfunction.

1.2 Equipment

The following equipment shall be used during SSD system startup monitoring.

- Personal protective equipment (PPE; gloves, safety glasses)
- Startup Monitoring Field Form (Table 1 of the Operations, Maintenance and Monitoring Plan)

---

[1] Geosyntec Consultants, 2013a. Building-Specific Vapor Intrusion Control System Remedial Design — 369 and 379 North Whisman Road. 3 July 2013.

- Field logbook
- Hand-held digital manometers – Dwyer Series 475-2-FM, 0–40 inches of water column as gauged (IWG); and Dwyer Series 475-000-FM, 0–1.000 IWG
- Hand-held digital anemometer – TSI Model No. 9545 VelociCalc
- Volatile organic compound (VOC)-free clay or putty
- ¼-inch inner diameter Teflon tubing
- ¼-inch inner diameter Nylaflow tubing
- Tedlar™ bags
- Battery powered lung box (for vapor sample collection in Tedlar™ bags)
- ppbRAE™ 3000 photoionization detector (PID) with a 10.6 electron-volt bulb
- 10 parts per million by volume (ppm_v) isobutylene calibration gas
- A minimum of 28 individually-certified 6-liter SUMMA™ canisters equipped with 8-hour flow controllers
- A minimum of six batch-certified 1-liter SUMMA™ canisters
- Vacuum gauge: 0 – 30 inches of mercury (in Hg)

Equivalent equipment and materials may also be used.

2 PROCEDURES

The following general procedures should be used for conducting SSD system startup monitoring.

2.1 Differential Pressure Measurements – Temporary Monitoring Points

During the first week of startup only, differential pressure measurements shall be collected at all indoor temporary pressure monitoring points as follows:

1. Set up the hand-held digital manometer:
    a. Press ON/OFF to turn the unit on.
    b. Vent both pressure ports to the atmosphere. Press the ZERO button until the LCD displays "--" then release it.

c. Set the units to IWG, displayed on the manometer as “IN W.C.”. To change units, press both ON/OFF and ZERO buttons simultaneously.

d. Connect the hand-held digital manometer (positive pressure port) to new flexible Teflon tubing, and connect the negative pressure port to tubing routed from the temporary pressure monitoring point to an outdoor location.

e. Apply VOC-free clay or putty around the outside of the unconnected end of the tubing.

2. Remove plug from temporary pressure monitoring point.
3. Insert Teflon tubing into the temporary pressure monitoring point and press the VOC-free clay or putty onto the floor adjacent to the temporary pressure monitoring point to create an airtight seal.
4. Record differential pressure measurements to the nearest 0.001 IWG and direction of pressure differential on the Startup Monitoring Field Form.
5. Disconnect the tubing and replace the temporary pressure monitoring point plug.
6. Press and hold ON/OFF for about 2 seconds to turn off the hand-held digital manometer.

2.2 Differential Pressure and Vacuum Measurements – Exterior Monitoring and Extraction Points and Building Interior

Differential pressure or vacuum measurements shall be collected at all monitoring points (MP-1 through MP-12), extraction points (EP-1 through EP-6), and at the influent to each equipment enclosure (EE-1 through EE-4) as follows:

1. Open monitoring point vault, extraction point vault, or equipment enclosure.
2. Inspect vault seal and sample port valves for damage, and note any repairs needed in the Field Logbook.
3. Set up the hand-held digital manometer:

    a. Press ON/OFF to turn the unit on.

    b. Vent both pressure ports to the atmosphere. Press the ZERO button until the LCD displays “--“ then release it.

   c. Set the units to IWG, displayed on the manometer as “IN W.C.”. To change units, press both ON/OFF and ZERO buttons simultaneously.

4. Attach flexible Teflon tubing to the hose barb of the sample port at each MP, EP, or EE location. For the MP and EP locations, connect to the sample ports that are upstream from the ball valve (i.e., closest to the buildings).
5. Connect the hand-held digital manometer (positive pressure port) to the tubing, and leave the negative pressure port open to the atmosphere.
6. Open the sample port valve and record differential pressure measurements to the nearest 0.001 IWG, including direction of pressure differential, on the Startup Monitoring Field Form.
7. Close the sample port valve, disconnect the hand-held digital manometer, and close the vault or equipment enclosure.
8. Press and hold ON/OFF for about 2 seconds to turn off the hand-held digital manometer.

Differential pressure measurements shall be collected across each doorway in Building 6 and 7 as follows:

1. Ensure all doors are closed.
2. Set up the hand-held digital manometer:
   a. Press ON/OFF to turn the unit on.
   b. Vent both pressure ports to the atmosphere. Press the ZERO button until the LCD displays “--“ then release it.
   c. Set the units to IWG, displayed on the manometer as “IN W.C.”. To change units, press both ON/OFF and ZERO buttons simultaneously.
3. Insert flexible Teflon tubing across each doorway.
4. Connect the hand-held digital manometer (positive pressure port) to the tubing, and leave the negative pressure port open to the atmosphere.
5. Record differential pressure measurements to the nearest 0.001 IWG and direction of pressure differential.
6. Disconnect the hand-held digital manometer, and press and hold ON/OFF for about 2 seconds to turn off the meter.

2.3 Flow Rate, Temperature, and Humidity Measurements[2]

Flow rate shall be measured at the metering boxes located downstream of each extraction point and at the influent to each equipment enclosure. Temperature and humidity shall also be measured at the influent to each equipment enclosure as follows:

1. Set up the hand-held digital anemometer:
    a. Retain a copy of the anemometer's calibration certificate.
    b. Press ON/OFF to turn the unit on. During the power-up sequence, the display will show the model number, serial number, software revision, and last date calibrated.
    c. If the parameters shown on the main screen do not include flow rate in standard cubic feet per minute (scfm), temperature (°F), and humidity (% relative humidity), press the Menu key and scroll left/right to select the "Display Setup" menu. Scroll left/right to highlight flow rate (scfm), then press the PRIMARY key to have this parameter show as the primary on the main screen. Scroll left/right to highlight temperature (°F), then press the ON key to have this parameter display on the main screen. Scroll left/right to highlight humidity (% relative humidity), then press the ON key to have this parameter display on the main screen. To remove a parameter from the main screen, scroll left/right to highlight that parameter, then press the OFF key.
    d. Press the Menu key and scroll left/right to select the "Flow Set up" menu. Scroll left/right to select "Round Duct", then change the value by highlighting the "Enter Settings" option and pressing the enter key. Change the value to 2.067 inches for 2-inch Schedule 40 PVC, or 3.068 inches for 3-inch Schedule 40 PVC.
    e. Press the Menu key and scroll left/right to select the "Actual/Std Set up" menu. Choose "Actual" measurements and parameters, and enter the actual barometric pressure. The anemometer will then automatically convert air

[2] This procedure is consistent with 40 CFR Part 60, Appendix A, Method 2A – Direct Measurement of Gas Volume through Pipes and Small Ducts.

velocity measurements to actual flow rate conditions. Barometric pressure may be obtained from a nearby National Weather Service station. The station value shall be adjusted for elevation differences between the weather station and the sampling point by applying a rate of - 2.5 millimeters of mercury (mm Hg) per 30-meter elevation increase, or vice-versa for elevation decrease.

f. Apply VOC-free clay or putty around the outside of the hand-held digital anemometer probe.

2. Open metering box and remove the plug.
3. Insert the digital anemometer probe into the pipe, making sure that the sensor window is fully exposed and that the orientation dimple is facing upstream. Press the VOC-free clay or putty onto the pipe for an airtight seal. Visually and aurally check all connections and verify tight seals.
4. Wait for flow rate, temperature, and humidity readings to stabilize.
5. Record observed flow rate, temperature, and humidity measurements.
6. Remove the hand-held digital anemometer from the pipe, replace the plug, and close the metering box.
7. Measure temperature and humidity of ambient air.
8. Press ON/OFF to turn off the hand-held digital anemometer.

2.4 Blower Inspection and Discharge Screening

Each blower shall be inspected to monitor proper and continuous operation. A properly operating blower produces a humming sound, and creates minor vibrations that can be felt within the discharge piping.

Observe the blower's amperage draw by reading the ampere meter located between the blower and electrical panel inside of each equipment enclosure. Record the reading in the Startup Monitoring Field Form.

Each discharge location shall also be field screened for VOCs using a ppbRAE™ 3000 PID with a 10.6 electron-volt bulb (or equivalent).[3] Measurements will be collected at the inlet and outlet of each vapor-phase granular activated carbon (VGAC) drum as follows:

1. Set up the PID:
    a. Press the MODE key to turn the unit on. The display will show "ON!.." and then the unit's current firmware version number, the serial number, model number, operating mode, current date and time, unit internal temperature, gas selected, alarm limits, battery voltage, and shut-off voltage. Also displayed are internal mode settings such as User mode, Alarm mode, datalog time remaining and log periods.
    b. After the monitor is turned on, it runs through the start-up menu. Then the message "Ready.." is displayed.
    c. Press and hold down both the [N/] and [MODE] keys for three seconds to enter into the programming mode.
    d. The first menu item "Calibrate/select Gas?" will be displayed. Press the [Y/+] key to select the calibration menu item. Connect a charcoal filter from the PID inlet to ambient air. Note: The charcoal filter has a check box so that user can mark off a box each time the filter has been used. The charcoal filter should be replaced after four calibrations. Then press the [Y/+] key at the "Zero Cal?" to start the zero air calibration.
    e. When the zero air calibration is complete, press the [Y/+] key at the "Span Cal?" to calibrate the PID using a 10 ppm_V isobutylene calibration gas, as follows:
        i. Remove the charcoal filter and replace with a particulate filter.
        ii. Connect the flow regulator to the calibration gas, and connect the calibration gas to the inlet port of the PID.

---

[3] This procedure is consistent with applicable Quality Assurance requirements of 40 CFR Part 60, Appendix A, Method 25A – Determination of Total Gaseous Organic Concentration Using a Flame Ionization Analyzer.

iii. When the display shows: “Apply gas now!” Turn on the valve of the calibration gas supply.

iv. Display shows “wait.... 30” with a countdown timer showing the number of remaining seconds while the monitor performs the calibration.

v. To abort the calibration, press any key during the countdown. The display shows “Aborted!” and returns to the “Span Cal?” sub-menu.

vi. When the countdown timer reaches 0, the display shows the calibrated value. Note: The reading should be very close to the calibration gas value (+/- 0.3 ppm_v).

vii. After the span calibration is completed, the display will show the message “Span Cal Done! Turn Off Gas.”

viii. Turn off the flow of gas. Disconnect the gas from the PID.

ix. Press any key to return back to “Span Gas Cal?”

f. Press the MODE key until the message “Ready..” is displayed.

g. Press the [Y/+] key to start a measurement. The PID will then display instantaneous readings.

2. Open the equipment enclosure.
3. Attach new flexible Teflon tubing to the hose barb of the sample port located at the influent to the VGAC drum.
4. Connect a battery-powered lung box to the tubing, and install a Tedlar™ bag inside of the battery-powered lung box for sample collection.
5. Open the sample port valve and turn on the lung box to collect a slip-stream sample of extracted vapor into the Tedlar™ bag.
6. Close the sample port valve, turn off the lung box, disconnect the Teflon tubing, and remove the full Tedlar™ bag.
7. Attach the Tedlar™ bag to the PID to measure total VOC concentrations.
8. Record observed VOC concentrations to the nearest ppb_v and record on the Startup Monitoring Field Form.

9. Attach new flexible Teflon tubing to the hose barb of the sample port located downstream of the blower (VGAC effluent).
10. Repeat steps 4 through 8, then close the equipment enclosure.
11. Connect a charcoal filter to the PID inlet and check the zero air calibration. Record value to check instrument calibration is still valid, (i.e., reading no higher than 3 ppb_v). Document the value in the Field Logbook.
12. Connect the flow regulator to the calibration gas, and connect the calibration gas to the inlet port of the PID. Record value to check instrument calibration is still valid (i.e., reading between 9.7 and 10.3 ppm_v). Document the value in the Field Logbook.
13. Press and hold the MODE key for five seconds to turn off the PID.

2.5 Extracted Vapor Sample Collection

Samples shall be collected from each extraction point (EP-1 through EP-6) for offsite laboratory speciated VOC analysis as follows:

1. Open extraction point vault.
2. Set up batch-certified 1-liter SUMMA™ canisters:
    a. With SUMMA canister valve closed, connect a pressure gauge tightly to the closed SUMMA™ canister, then open the canister valve. Record the canister's initial vacuum in in Hg. If vacuum is not greater than 28 in Hg, the canister may have been compromised. Replace and do not reuse.
    a. Close the canister valve and remove the vacuum gauge.
    b. Document the SUMMA™ canister number and the flow controller number for each sample collected in the Field Logbook.
3. Attach new flexible Teflon tubing to the hose barb of the inner sample port at each EP location, and to the SUMMA™ canister using compression fittings.
4. Open the sample port and SUMMA™ canister valves to begin sample collection. Collect one duplicate sample as a blind duplicate for quality assurance/quality control.

5. When the vacuum in the SUMMA™ canister reaches 5 in Hg, as indicated by the vacuum gauge built into the flow controller, close the SUMMA™ canister and sample port valves to stop the sample collection.
6. Disconnect the SUMMA™ canister from the Teflon tubing, remove the flow controller, and close the extraction point vault.
7. Connect a vacuum gauge to the closed SUMMA™ canister, then open the canister valve. Record the canister's final vacuum (in Hg) in the Field Logbook.
8. Label each SUMMA™ canister and log each sample on a chain-of-custody record form.
9. Transport the samples under chain-of-custody procedures and within applicable hold times to a NELAC-approved laboratory for analysis of the following target list of VOCs using USEPA Method TO-15: trichloroethene, tetrachloroethene, cis-1,2-dichloroethene, trans-1,2-dichloroethene, and vinyl chloride.

2.6 Indoor Air Sample Collection

Indoor air samples shall be collected at Buildings 6 and 7 as follows:

1. Refer to the Indoor Air Sampling Report[4] for indoor air sampling locations.
2. Set up individually-certified 6-liter SUMMA™ canisters:
    a. Connect a vacuum gauge to the closed SUMMA™ canister, then open the canister valve. Record the canister's initial vacuum in in Hg. If vacuum is not greater than 28 in Hg, the canister may have been compromised. Replace and do not reuse.
    a. Close the canister valve and remove the vacuum gauge.
    b. Connect a flow controller to the individually-certified 6-liter SUMMA™ canister. The flow controller should be set by the laboratory for an 8-hour duration. Document the SUMMA™ canister number and the flow controller number for each sample collected in the Field Logbook.

---

[4]Geosyntec, 2013b. Indoor Air Sampling Report, Former Fairchild Buildings – Google Quad, 369, 379, 389 and 399 North Whisman Road and 468 Ellis Street. February 2013.

3. Open the SUMMA™ canister valve to begin sample collection into 6-liter individually-certified canisters. Collect one duplicate sample as a blind duplicate for quality assurance/quality control.
4. Measure temperature and relative humidity of indoor air and ambient (outside) air in accordance with Section 2.3 of this document. Record in the Field Logbook.
5. When the vacuum in the SUMMA™ canister reaches 5 in Hg, as indicated by the vacuum gauge built into the flow controller, close the SUMMA™ canister and sample port valves to stop the sample collection.
6. Remove the flow controller from the SUMMA™ canister.
7. Connect a vacuum gauge to the closed SUMMA™ canister, then open the canister valve. Record the canister's final vacuum (in Hg). Document in the Field Logbook.
8. Label each SUMMA™ canister and log each sample on a chain-of-custody record form.
9. Transport the samples under chain-of-custody procedures and within applicable hold times to a NELAC-approved laboratory for analysis of the following target list of VOCs using USEPA Method TO-15: trichloroethene, tetrachloroethene, cis-1,2-dichloroethene, trans-1,2-dichloroethene, and vinyl chloride.