ROCKETS, FIREWORKS, AND FLARES SUPERFUND SITE

SOURCE AREA OPERABLE UNIT

RIALTO, CALIFORNIA

GROUNDWATER EXTRACTION AND TREATMENT SYSTEM COMBINED REMEDY

June, 2014

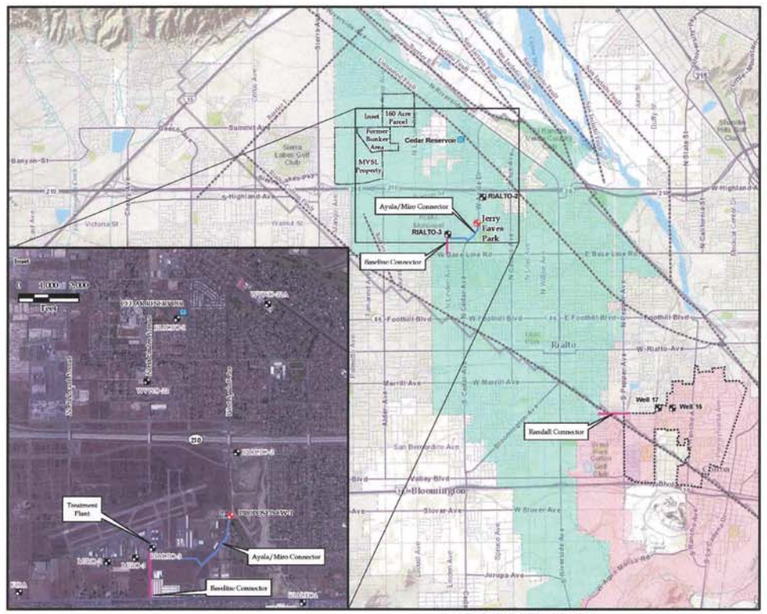

SITE LOCATION MAP

INDEX OF DRAWINGS

SHEET NUMBER	DISCIPLINE NUMBER	SHEET TITLE
1	G-1	COVER SHEET
2	G-2	GENERAL NOTES, SYMBOLS AND ABBREVIATIONS
3	G-3	GENERAL INDEX OF PIPING PLANS AND WELL LOCATIONS
4	G-4	PLANT FLOW DIAGRAM
5	G-5	SYSTEM HYDRAULIC PROFILE
5A	G-6	TREATMENT PLANT SITE PLAN
6	C-1	TREATMENT PLANT GRADING PLAN SECTIONS AND DETAILS
7	C-2	WELL SITE IMPROVEMENTS AND PRECISE GRADING PLAN
8	C-3	WELL SITE SECTIONS AND DETAILS
9	C-4	TREATMENT PLANT SITE WATER MAIN PLAN AND PROFILE
10	C-5	MIRO WAY WATER MAIN PLAN AND PROFILE
11	C-6	MIRO WAY WATER MAIN PLAN AND PROFILE
12	C-7	AYALA DRIVE WATER MAIN PLAN AND PROFILE
13	C-8	AYALA DRIVE WATER MAIN PLAN AND PROFILE
14	C-9	LINDEN WATER MAIN PLAN AND PROFILE
15	C-10	LINDEN WATER MAIN PLAN AND PROFILE
16	C-11	LINDEN WATER MAIN PLAN AND PROFILE
17	C-12	NOT USED
18	C-13	NOT USED
19	C-14	NOT USED
20	C-15	NOT USED
21	C-16	RANDALL AVENUE WATER MAIN PIPING PLAN AND PROFILE
22	C-17	RANDALL AVENUE WATER MAIN PIPING PLAN AND PROFILE
23	C-18	RANDALL AVENUE WATER MAIN PIPING PLAN AND PROFILE
24	C-19	GENERAL CIVIL DETAILS
25	C-20	GENERAL CIVIL DETAILS
26	C-21	GENERAL CIVIL DETAILS
27	C-22	GENERAL CIVIL DETAILS
28	C-23	GENERAL CIVIL DETAILS
29	S-1	STRUCTURAL NOTES
30	S-2	TREATMENT PLANT PAD STRUCTURAL PLAN & DETAILS
31	S-3	TREATMENT PLANT PAD STRUCTURAL SECTIONS & DETAILS
32	S-4	UV BUILDING FLOOR PLAN, ROOFING PLAN AND ELEVATIONS
33	S-5	WELL BUILDING FOUNDATION PLAN AND DETAILS
34	S-6	WELL BUILDING FLOOR PLAN, ROOFING PLAN AND ELEVATIO
35	S-7	WELL SITE WALL ELEVATIONS AND DETAILS
36	S-8	WELL SITE WALL ELEVATIONS AND DETAILS
37	S-9	SBPWC STANDARD WALL DETAILS
38	S-10	STRUCTURAL DETAILS
39	M-1	TREATMENT PLANT MECHANICAL PIPING PLAN
40	M-2	TREATMENT PLANT MECHANICAL PIPING SECTIONS
41	M-3	TREATMENT PLANT MECHANICAL PIPING SECTIONS
42	M-4	TREATMENT PLANT MECHANICAL PIPING SECTIONS
43	M-5	TREATMENT PLANT MECHANICAL PIPING SECTIONS
44	M-6	BOOSTER STATION MECHNICAL PIPING PLAN, SECTIONS AND
45	M-7	LGAC EQUIPMENT GENERAL ARRANGEMENT AND DETAILS
46	M-8	IX EQUIPMENT GENERAL ARRANGEMENT AND DETAILS
47	M-9	FILTER EQUIPMENT GENERAL ARRANGEMENT AND DETAIL
48	M-10	DISINFECTION EQUIPMENT GENERAL ARRANGEMENT AND DE
49	M-11	WELL MECHNICAL PIPING PLAN, SECTIONS AND DETAILS
50	M-12	MECHNICAL DETAILS
51	M-13	MECHNICAL DETAILS
52	PID-1	(P&ID) ABBREVIATION, SYMBOLS & GENERAL NOTES
53	PID-2	WELL HEAD AND BOOSTER STATION
54	PID-3	BAG FILTER AND NEW IX VESSEL FOR EXISTING IX SYSTEM
55	PID-4	ION EXCHANGE VESSELS
56	PID-5	LGAC - PROCESS AND INSTRUMENTATION DIAGRAM
57	PID-6	DISINFECTION SYSTEM CALCIUM HYPOCHLORITE
58	PID-7	MECHANICAL SCHEDULE VALVE AND INSTRUMENT LIST
59	PID-8	MECHANICAL SCHEDULE IX AND LGAC VALVE LIST
60	E-1	ELECTRICAL NOTES AND SYMBOLS
61	E-2	OVERALL SITE POWER PLAN
62	E-3	WELL SITE SINGLE LINE DIAGRAM
63	E-4	NOT USED
64	E-5	WELL SITE ENLARGED POWER PLAN
65	E-6	WELL SITE ENLARGED LIGHTING PLAN
66	E-7	WELL SITE CONTROL PANEL LAYOUT & BILL OF MATERIAL
67	E-8	WELL SITE CONTROL PANEL WIRING DIAGRAM
68	E-9	TREATMENT PLANT SINGLE LINE DIAGRAM
69	E-10	TREATMENT PLANT LOAD SCHEDULES
70	E-11	TREATMENT PLANT ELECTRICAL CONDUIT PLAN
71	E-12	TREATMENT PLANT ELECTRICAL WIRING DIAGRAM PART 1
72	E-13	TREATMENT PLANT ELECTRICAL WIRING DIAGRAM PART 2
73	E-14	TREATMENT PLANT ELECTRICAL WIRING DIAGRAM PART 3
74	E-15	TREATMENT PLANT REMOTE CONTROL PANEL LAYOUT
75	E-16	TREATMENT PLANT REMOTE CONTROL WIRING DIAGRAM PAI
76	E-17	TREATMENT PLANT REMOTE CONTROL WIRING DIAGRAM PAI
77	E-18	TREATMENT PLANT REMOTE CONTROL WIRING DIAGRAM PAI
78	E-19	ELECTRICAL DETAILS
79	E-20	TREATMENT PLANT EXISTING PLC LAYOUT & BILL OF MATER
80	E-21	TREATMENT PLANT CONDUIT AND WIRE SCHEDULES
81	E-22	RANDALL AVE ELECTRICAL PLOT PLAN
82	E-23	RANDALL AVE CP LAYOUT
83	E-24	RANDALL AVEL CP LAYOUT AND BOM
84	E-25	RANDALL AVE ELECTRICAL WIRING DIAGRAM
85	E-26	TREATMENT PLANT EQUIPMENT PAD GROUNDING PLAN

REV	DATE	REVISION	APPR'D	REV BY

DIAL 811
DIGALERT
UNDERGROUND SERVICE ALERT
PLAY IT SAFE. DIAL BEFORE YOU DIG!
AT LEAST TWO WORKING DAYS PRIOR TO EXCAVATING

REGISTERED PROFESSIONAL ENGINEER CHRISTOPHER SHEM HAWES Exp. 6/30/2014 No. 69578 CIVIL STATE OF CALIFORNIA
6/18/14

PLANS PREPARED BY:

General Civil, Transportation, Municipal, Water and Wastewater Engineering, Planning, Construction Management, and Surveying

118 West Lime Avenue
Monrovia, Ca. 91016
Phone: (626) 357-0588
Fax: (626) 303-7957

CIVILTEC engineering inc.
Monrovia • Prescott • Phoenix

ERM

GROUNDWATER EXTRACTION AND TREATMENT SYSTEM COMBINED REMEDY SOURCE AREA OPERABLE UNIT, ROCKETS, FIREWORKS, AND FLARES SUPERFUND SITE

SCALE: AS SHOWN	DESIGNED BY: BS/BD	DRAWN BY: JAM	DRAWING NUMBER:	REV
DATE: JANUARY 2014	CHECKED: BD/SCH	APPROVED:	JOB NUMBER: 2013175.00	SHEET 1

COVER SHEET

DISCIPLINE NO. G-1

ENVIRONMENTAL RESOURCES MANAGEMENT

N:\SNWP\ACPUBLISH_7872\RIALTO G-01 COVER.DWG (06-19-14 12:53:45PM)

LEGEND & SYMBOL

- A/V — AIR AND VACUUM VALVE
- B.O. — BLOW-OFF
- WM — WATER SERVICE METER
- REDUCER/ENLARGER
- END CAP
- TEE
- STREET LIGHT
- PULL BOX
- FIRE HYDRANT
- OR — GATE OR BUTTERFLY VALVES
- SMH — EXISTING SEWER MANHOLE
- SMH — PROPOSED SEWER MANHOLE
- OR — THRUST BLOCK
- 3309 — ADDRESS – PROPERTY ADDRESS
- 000-0-000-000 — APN – ASSESSOR'S PARCEL NUMBER
- PRV — PRESSURE REGULATING VALVE
- W — EXISTING WATER MAIN
- S — EXISTING SEWER MAIN
- G — EXISTING GAS MAIN
- E — EXISTING ELECTRICAL LINE
- TV — EXISTING CABLE TV LINE
- (OH) — EXISTING OVER HEAD ELECTRICAL LINE
- T — EXISTING TELEPHONE LINE
- PROPERTY LINE
- RIGHT-OF-WAY
- CITY BOUNDARY
- PAINTED DIRECTIONAL ARROW
- PAINTED ACCESSIBILITY SYMBOL
- FENCING MATERIAL AND SPECIFICATIONS ARE PENDING
- EXISTING RETAINING WALL
- DECOMPOSED GRANITE
- PROPOSED CONCRETE
- NON-SKID SURFACE
- EXISTING CONTOUR
- 85 — PROPOSED CONTOUR
- X — PROPOSED FENCE
- X — EXISTING FENCE
- PROPOSED A.C. PAVEMENT
- EXISTING EDGE OF PAVEMENT CONCRETE PAVEMENT
- EXISTING CONCRETE
- CONCENTRATED FLOW
- SHEET FLOW
- DAYLIGHT
- 250 — EXISTING CONTOUR
- 250 — PROPOSED CONTOUR
- (102.78) — EXISTING GRADE
- EDGE OF A. C. PAVEMENT
- FINISHED CONCRETE SURFACE
- 59.15 FG — EXISTING ELEVATION
- O — OIL PIPELINE
- EXISTING STORM DRAIN
- E — PROPOSED CONDUIT
- STREET CENTERLINE (℄)
- GRAVEL BED
- COMPACTED FILL
- LANDSCAPED AREA
- PROPOSED FLANGED GATE VALVE
- PROPOSED FLANGED PLUG VALVE
- PROPOSED FLANGED CHECK VALVE
- PROPOSED FLANGED BUTTERFLY VALVE
- TYPICAL STEEL-RING FLANGE

PROFILE NUMBER — 2 / 3 — PROFILE, SCALE
DRAWING NUMBER FROM WHICH THE PROFILE WAS TAKEN.

SEE PROFILE 2 / 3
PROFILE NUMBER
DRAWING NUMBER ON WHICH THE DETAIL APPEARS.

SECTION NUMBER — 3 / 10 — SHEET ON WHICH THE SECTION IS SHOWN IN DETAIL

SECTION 1 / 3 — SECTION NUMBER; SHEET ON WHICH THE SECTION IS CUT THROUGH IN PLAN VIEW
SCALE

- EX. BUILDING
- EX. TREES
- NEW CURB
- NEW GUTTER
- NEW BUILDING
- NEW VESSELS
- FIRE HYDRANT
- CUT AND PLUG

DETAIL 1 / 2 — DETAIL NUMBER; SHEET ON WHICH THE SECTION IS CUT THROUGH IN PLAN VIEW
SCALE

DIAL 811
DIGALERT
UNDERGROUND SERVICE ALERT
PLAY IT SAFE. DIAL BEFORE YOU DIG!
AT LEAST TWO WORKING DAYS PRIOR TO EXCAVATING

ABBREVIATIONS

ALT.	ALTERNATE
& OR &	AND
∠	ANGLE
∠	ANGLE (STRUCTURAL)
∠s	ANGLES
APPD. EQ.	APPROVED EQUAL
APPROX.	APPROXIMATE
A.C.P.	ASBESTOS-CEMENT PIPE
A.C.	ASPHALT CONCRETE
ASSY.	ASSEMBLY
ASTM.	AMERICAN SOCIETY FOR TESTING AND MATERIALS
ART.	ARTICLE
@	AT
AVE.	AVENUE
B.C.	BEGINNING OF CURVE
B.&S.	BELL AND SPIGOT
B.M.	BENCH MARK
B.C.	BOLT CIRCLE
B.P.	BOOSTER PUMP
BOT.	BOTTOM
BLVD.	BOULEVARD
BDRY.	BOUNDARY
BLDG.	BUILDING
B'FLY.	BUTTERFLY
B.V.	BUTTERFLY VALVE
BW	BACK OF WALK
CALCS	CALCULATIONS
CB	CATCH BASIN
C.I.	CAST IRON
C.I.P.	CAST IRON PIPE
℄ OR CL	CENTER LINE
CTR.	CENTER
C.L.F.	CHAIN LINK FENCE
CH'KD PL	CHECKERED PLATE
C.C.	CENTER TO CENTER
C.M.L.	CEMENT MORTAR LINED
CML & C	CEMENT MORTAR LINED & COATED
CML & P	CEMENT MORTAR LINED & PAINTED
C.M.C.	CEMENT MORTAR COATED
CL.	CLASS
COEF.	COEFFICIENT
COL.	COLUMN
CO.	COMPANY
CONC.	CONCRETE
CONST.	CONSTRUCTION
CONT.	CONTINUOUS
COORD.	COORDINATE
COR.	CORNER
CORP.	CORPORATION
CORR.	CORRUGATED
C.M.P.	CORRUGATED METAL PIPE
CPLG.	COUPLING
C.A.B.	CRUSHED AGGREGATE BASE
CS	CARBON STEEL
CU.	CUBIC
C.F.	CURB FACE
C.Y.	CUBIC YARD
CYL.	CYLINDER
CLRN.	CLEARANCE
° OR DEG.	DEGREE
C	DELTA
DEPT.	DEPARTMENT
DET.	DETAIL
D, DIA., OR ø	DIAMETER
DWG.	DRAWING
DR.	DRIVE
D.I.	DUCTILE IRON
D.I.P.	DUCTILE IRON PIPE
EA.	EACH
E.F.	EACH FACE
E.W.	EACH WAY
E.W.E.F.	EACH WAY EACH FACE
E.	EAST
E/O	EAST OF
ECC.	ECCENTRIC
EP	EDGE OF PAVEMENT
EMH	ELECTRICAL MANHOLE
EL. OR ELEV.	ELEVATION
ELL.	ELBOW
E.C.	END OF CURVE
EQ. OR =	EQUAL
EXIST. OR EX.	EXISTING
FT.	FOOT OR FEET
FIG.	FIGURE
FIN.	FINISH
FF.	FINISHED FLOOR
FS.	FINISHED SURFACE
FG.	FINISHED GRADE
FLG.	FLANGE
FLGD.	FLANGED
FE.	FLANGED END
FH	FIRE HYDRANT
FL.	FLOW LINE
GA.	GAGE OR GAUGE
GAC.	GRANULAR ACTIVATED CARBON
GAL.	GALLON
GALV.	GALVANIZED
G.I.P.	GALV. IRON PIPE
G.M.	GAS METER
G.V.	GATE VALVE
G.B.	GRADE BREAK
GND.	GROUND
H.P.	HIGH POINT
HWY.	HIGHWAY
HORIZ.	HORIZONTAL
HP.	HORSE POWER
IN. OR "	INCH
INCL.	INCLUDING
I.D.	INSIDE DIAMETER
INST.	INSTALL
INC.	INCORPORATED
INT.	INTERIOR
INV.	INVERT
I.P.S.	IRON PIPE SIZE
IX	ION EXCHANGE
LN.	LANE
LAT.	LATITUDE
LT.	LEFT
LG.	LENGTH
L.F.	LINEAR FOOT
LG.	LONG
LGAC.	LIQUID PHASE GRANULAR ACTIVATED CARBON
LONG.	LONGITUDINAL
LL	LOT LINE
LP	LOW POINT
LUB.	LUBRICATED
M.H.	MANHOLE
MHR	MANHOLE RIM
MFR.	MANUFACTURER
MAX.	MAXIMUM
M.S.L.	MEAN SEA LEVEL
M.J.	MECHANICAL JOINTS
MID.	MIDDLE
MI.	MILE
MIN.	MINIMUM
' OR MIN.	MINUTE
MISC.	MISCELLANEOUS
MON.	MONUMENT
NEG.	NEGATIVE
N.	NORTH
N.C.	NORMALLY CLOSED
N/O	NORTH OF
N.I.C.	NOT IN CONTRACT
N.T.S.	NOT TO SCALE
NO. OR #	NUMBER
NOS.	NUMBERS
O.C.	ON CENTER
O.A.E.	OR APPROVED EQUAL
O.D.	OUTSIDE DIAMETER
O.H.	OVER HEAD
PVMT.	PAVEMENT
P.E.	PAD ELEVATION
PLT.	PLATE
PE	PLAIN END
P.A.	PLANTER AREA
PAV'T	PAVEMENT
P.C.C.	POINT OF COMPOUND CURVE OR PORTLAND CEMENT CONCRETE
P.C.	POINT OF CURVE
P.I.	POINT OF INTERSECTION
P.O.S.	POINT OF SLOPE
P.T.	POINT OF TANGENCY
PT.	POINT
P.V.C.	POLYVINYL CHLORIDE
POS.	POSITIVE
LB.	POUND
P.S.I.	POUND PER SQUARE INCH
P.P.	POWER POLE
PVT.	PRIVATE
PROJ.	PROJECT
ℙ	PROPERTY LINE
PROP.	PROPOSED
R. OR RAD.	RADIUS
RD	RELATIVE DENSITY
RL	RIDGELINE
R.R.	RAILROAD
R.G.	ROUGH GRADE
RY.	RAILWAY
REF.	REFERENCE
REINF.	REINFORCING
R.C.P.	REINFORCED CONC. PIPE
RES.	RESERVOIR
R.W.G.V.	RESILIENT WEDGE GATE VALVE
REV.	REVISION
RT.	RIGHT
R/W	RIGHT-OF-WAY
RD.	ROAD
RS4	SINGLE FAMILY RESIDENCE
" OR SEC.	SECOND
SD	STORM DRAIN
SDR	STANDARD DIMENSION RATIO
SECT.	SECTION
SMH	SEWER MANHOLE
SHT.	SHEET
S.	SOUTH
S/O	SOUTH OF
SPEC'S.	SPECIFICATIONS
SQ.	SQUARE
SS	SANITARY SEWER
STD.	STANDARD
STA.	STATION
STL.	STEEL
S.C.C.P.	STL. CYL. CONC. PIPE
SDMH	STORM DRAIN MANHOLE
ST.	STREET
ST. LT.	STREET LIGHT
STR.	STRUCTURAL
S1S1E	SURFACED 1 SIDE & 1 EDGE
S2S1E	" 2 SIDES & 1 EDGE
S1S2E	" 1 SIDE & 2 EDGES
S1E	" 1 EDGE
S1S	" 1 SIDE
S2E	" 2 EDGES
S4S	" 4 SIDES
SYM.	SYMMETRICAL
TMH	TELEPHONE MANHOLE
T.P.	TELEPHONE POLE
TEMP.	TEMPERATURE
TERR.	TERRACE
THD.	THREAD
TOE	TOE OF SLOPE
TC	TOP OF CURB
TF	TOP OF FOOTING
T.G.	TOP OF GRATE
TOP	TOP OF SLOPE
T.P.	TOP OF PLATFORM
T.V.	TOP OF VAULT
TW	TOP OF WALL
TRANS.	TRANSITION
TYP.	TYPICAL
TJ	TYTON JOINT
VERT.	VERTICAL
V.C.P.	VITRIFIED CLAY PIPE
VOC	VOLATILE ORGANIC COMPOUND
W.I.	WROUGHT IRON
WM	WATER METER
WV	WATER VALVE
WT.	WEIGHT
W.	WEST
W/O	WEST OF
W/	WITH
WS	WATER SURFACE

GENERAL NOTES

1. THE WATER SYSTEM SHALL BE CONSTRUCTED IN ACCORDANCE WITH THESE PLANS AND SPECIFICATIONS, CURRENT CITY OF RIALTO, CITY OF COLTON AND THE "STANDARD SPECIFICATIONS FOR PUBLIC WORKS CONSTRUCTION" LATEST EDITION. ALL WORK SHALL BE SUBJECT TO THE INSPECTOR'S ACCEPTANCE AS A CONDITION OF COMPLETION OF WORK BY THE CONTRACTOR. IN ADDITION, ALL TRENCH BACKFILL, A.C. PAVING, AND CONCRETE REPLACEMENT SHALL BE SUBJECT TO THE ENGINEER'S ACCEPTANCE AS A CONDITION OF COMPLETION OF WORK BY THE CONTRACTOR.
2. THE CONTRACTOR SHALL BE RESPONSIBLE FOR MAKING HIMSELF FAMILIAR WITH ALL UNDERGROUND UTILITIES, PIPES AND STRUCTURES. THE CONTRACTOR SHALL VERIFY SITE CONDITIONS AND MAKE NECESSARY POT HOLES, NOTIFY THE VARIOUS UTILITIES TO MAKE NECESSARY ARRANGEMENTS FOR ANY RELOCATION OF THESE UTILITIES WITH THE OWNER OF THE UTILITY. ANY DELAY OR INCONVENIENCE CAUSED BY THE CONTRACTOR IN THE RELOCATION OF VARIOUS UTILITIES SHALL BE INCIDENTAL TO THE CONTRACT, NO EXTRA COMPENSATION WILL BE ALLOWED. CONTRACTOR SHALL TAKE SOLE RESPONSIBILITY FOR COST INCURRED DUE TO DAMAGE AND REPLACEMENT OF SAID UTILITIES.
3. PRIOR TO CONSTRUCTION OF THE WATER MAIN, THE CONTRACTOR, AT HIS OWN EXPENSE, SHALL OBTAIN ALL NECESSARY PERMITS TO EXPOSE THE EXISTING WATER LINE WHERE CONNECTIONS WILL OCCUR AND VERIFY THEIR ELEVATION AND LOCATION. CONTRACTOR SHALL NOT WILLFULLY PROCEED WITH CONSTRUCTION AS DESIGNED WHEN IT IS OBVIOUS THAT UNKNOWN OBSTRUCTIONS AND/OR DISCREPANCIES EXIST THAT MAY NOT HAVE BEEN KNOWN DURING DESIGN. THE ENGINEER SHALL BE CONSULTED TO MAKE ANY/ALL REQUIRED INTERPRETATIONS OF THE PLANS, HOWEVER, THIS IN NO WAY RELIEVES THE CONTRACTOR OF HIS RESPONSIBILITY FOR CONSTRUCTING THE PROJECT TO ACCOMPLISH THE INTENT OF THE PLANS. THE CONTRACTOR SHALL ASSUME FULL RESPONSIBILITY FOR ALL NECESSARY REVISIONS DUE TO A FAILURE TO GIVE SUCH NOTIFICATION.
4. CONTRACTOR SHALL BE RESPONSIBLE FOR ANY COORDINATION WITH OTHER SUB-CONTRACTORS AS REQUIRED TO ACCOMPLISH CONSTRUCTION OPERATIONS.
5. ALL CONTRACTOR AND SUBCONTRACTORS PERFORMING WORK SHOWN ON OR RELATED TO THESE PLANS SHALL CONDUCT THEIR OPERATIONS SO THAT ALL EMPLOYEES ARE PROVIDED A SAFE PLACE TO WORK AND THE PUBLIC IS PROTECTED.
6. ALL CONTRACTOR AND SUBCONTRACTORS SHALL COMPLY WITH THE "OCCUPATIONAL SAFETY AND HEALTH REGULATION" OF THE U.S. DEPARTMENT OF LABOR, AND WITH THE STATE OF CALIFORNIA DEPARTMENT OF INDUSTRIAL RELATIONS' "CONSTRUCTION SAFETY ORDERS."
7. CONTRACTOR SHALL SUBMIT "AS-BUILT" TREATMENT PLANT AND WATER PLANS TO THE OWNER.
8. INSPECTOR PRIOR TO FINAL INSPECTION AND SHALL BE MADE AVAILABLE TO AFFECTED PRIVATE PROPERTY OWNERS.
9. CONTRACTOR SHALL OBTAIN CONSTRUCTION PERMITS FROM THE CITY OF RIALTO, CITY OF COLTON OR ANY OTHER CITY'S DEPARTMENT OF PUBLIC WORKS PRIOR TO BEGINNING ANY WORK IN THEIR PUBLIC RIGHT OF WAY.
10. THE CONTRACTOR SHALL NOTIFY RESPECTIVE CITY, PUBLIC WORKS DEPARTMENT FIVE (5) WORKING DAYS PRIOR TO BEGINNING CONSTRUCTION AND AT LEAST TWO (2) WORKING DAYS NOTICE WHEN INSPECTIONS OR ENGINEERING JUDGEMENTS BECOME NECESSARY AS SET FORTH IN THE STANDARDS.
11. ALL PERMIT WORK SHALL CONFORM TO PERMIT REQUIREMENTS AT ALL TIMES. THE PLANS, SPECIFICATIONS AND ALL NECESSARY PERMITS REQUIRED BY THE OWNER AND THE RESPECTED CITY SHALL BE ON THE JOB SITE AT ALL TIMES.
12. ALL WORK WHICH IS NOT IN THE PUBLIC RIGHT OF WAY SHALL BE DONE AT THE LEAST INCONVENIENCE TO THE PROPERTY OWNER, CONTRACTOR SHALL MINIMIZE DAMAGE TO EXISTING LANDSCAPING. ALL PRIVATE OR PUBLIC WALLS, FENCES, SOILS REMOVED FOR THE CONSTRUCTION OF THE WELL, TREATMENT PLANT EXPANSION AND PIPE LINES SHALL BE REPLACED TO MATCH EXISTING. CONTRACTOR SHALL FILL ALL TURF & LANDSCAPED AREAS TO ORIGINAL GRADE TO ORIGINAL CONDITION.
13. SHUT DOWN OF EXISTING TRANSMISSION MAINS SHALL BE LIMITED TO TWO (2) HOURS MAXIMUM, UNLESS DIRECTED OTHERWISE BY THE WATER SUPERVISOR.
14. CONNECTIONS TO EXISTING WATER LINES SHALL BE DONE ONLY IN THE PRESENCE OF THE WATER COMPANY INSPECTOR OR ITS DESIGNATED PERSONNEL.
15. FOR WATER AND SEWER SEPARATION SEE CITY OF RIALTO AND CITY OF COLTON PUBLIC WORKS DEPARTMENT ENGINEERING DEVISION. WHEREVER THE WATER LINE CROSSES OVER THE SEWER LINE AND THE SEPARATION AT CROSSING POINT IS ONE FOOT OR LESS, THE CONTRACTOR SHALL INSTALL THE WATER MAIN SO THAT THE PIPE SECTION IS CENTERED OVER THE SEWER LINE AND THERE SHALL NOT BE A JOINT WITHIN 6 FEET; 10 FEET WHEREVER THE WATERLINE CROSSES UNDER THE SEWER LINE.
16. ALL PRESSURE TESTS SHALL BE APPROVED BY THE OWNER'S INSPECTOR PRIOR TO PLACEMENT OF PERMANENT RESURFACING.
17. DISCHARGES OF MATERIAL OTHER THAN STORM WATER ARE ALLOWED ONLY WHEN NECESSARY FOR PERFORMANCE AND COMPLETION OF CONSTRUCTION PRACTICES AND WHERE THEY DO NOT CAUSE OR CONTRIBUTE TO A VIOLATION OF ANY WATER QUALITY STANDARD; CAUSE OR THREATEN TO CAUSE POLLUTION, CONTAMINATION OR NUISANCE; OR CONTAIN A HAZARDOUS SUBSTANCE IN A QUANTITY REPORTABLE UNDER FEDERAL REGULATIONS 40 CFR, PARTS 117 AND 302.
18. POTENTIAL POLLUTANTS INCLUDE, BUT ARE NOT LIMITED TO: WASTES GENERATED DURING DRILLING ACTIVITIES, SOLID OR LIQUID CHEMICAL SPILLS; WASTES FROM PAINTS, STAINS, SEALANTS, GLUES, LIMES, PESTICIDES, HERBICIDES, WOOD PRESERVATIVES AND SOLVENTS; ASBESTOS FIBERS, PLANT FLAKES OR STUCCO FRAGMENTS; FUELS, OILS, LUBRICANTS AND HYDRAULIC, RADIATOR OR BATTERY FLUIDS; FERTILIZERS, VEHICLE/EQUIPMENT AND CONCRETE WASH WATER; CONCRETE, DETERGENT OR FLOATABLE FROM ANY ENGINE/EQUIPMENT STEAM CLEANING OR CHEMICAL DEGREASING; AND SUPER-CHLORINATED POTABLE WATER LINE FLUSHING.
19. DURING CONSTRUCTION, DISPOSAL OF SUCH MATERIALS SHOULD OCCUR IN A SPECIFIED AND CONTROLLED TEMPORARY AREA ON-SITE, PHYSICALLY SEPARATED FROM POTENTIAL STORM WATER RUN-OFF, WITH ULTIMATE DISPOSAL IN ACCORDANCE WITH LOCAL, STATE AND FEDERAL REQUIREMENTS.
20. CONTRACTOR SHALL NOTIFY ENGINEER TWO WORKING DAYS IN ADVANCE OF ANY DISPOSAL ACTIVITIES.

REV	DATE	REVISION	APPR'D	REV BY

REGISTERED PROFESSIONAL ENGINEER — CHRISTOPHER SHEM HAWES — Exp. 6/30/2014 — No. 69578 — CIVIL — STATE OF CALIFORNIA
6/18/2014

PLANS PREPARED BY:
General Civil, Transportation, Municipal, Water and Wastewater Engineering, Planning, Construction Management, and Surveying
118 West Lime Avenue
Monrovia, Ca. 91016
Phone: (626) 357-0588
Fax: (626) 303-7957
CIVILTEC engineering inc.
Monrovia • Prescott • Phoenix

ERM

GROUNDWATER EXTRACTION AND TREATMENT SYSTEM COMBINED REMEDY SOURCE AREA OPERABLE UNIT, ROCKETS, FIREWORKS, AND FLARES SUPERFUND SITE

SCALE	AS SHOWN	DESIGNED BY	JM/BS/BD/CD	DRAWN BY	JM/BS/CD	DRAWING NUMBER	
DATE	SCALE	CHECKED	BD/CSH	APPROVED		JOB NUMBER	2013175.00

REV

SHEET 2

GENERAL NOTES, SYMBOLS AND ABBREVIATIONS

DISCIPLINE NO. G-2

ENVIRONMENTAL RESOURCES MANAGEMENT

X:\2013\2013175.00-ERM-RIALTO TREATMENT PLANT\2013175.00 RIALTO-SHT2 G-2 GENERAL NOTES, ABBREVIATION

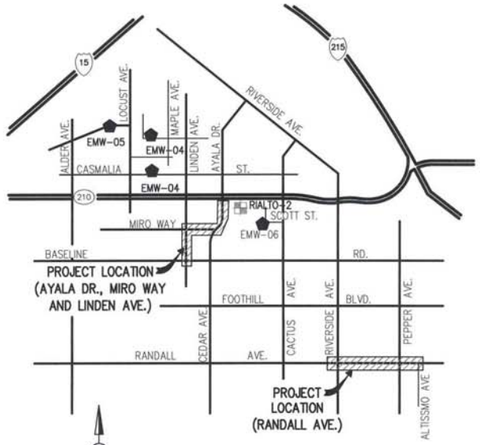

VICINITY MAP

NOT TO SCALE

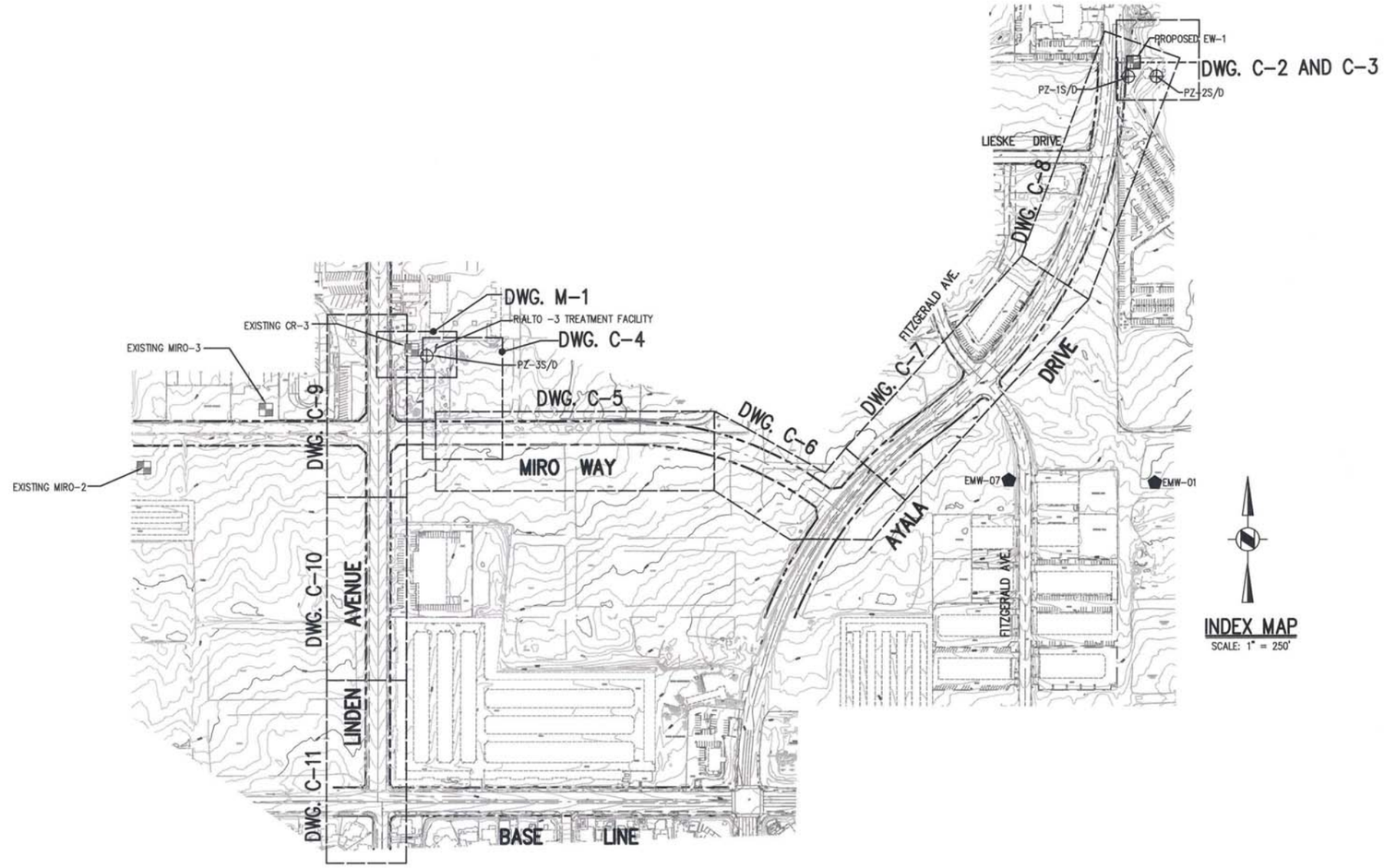

INDEX MAP

SCALE: 1" = 250'

LEGEND

- PROPOSED MONITORING WELL
- PROPOSED PIEZOMETER
- PROPOSED EXTRACTION WELL
- EXISTING EXTRACTION WELL

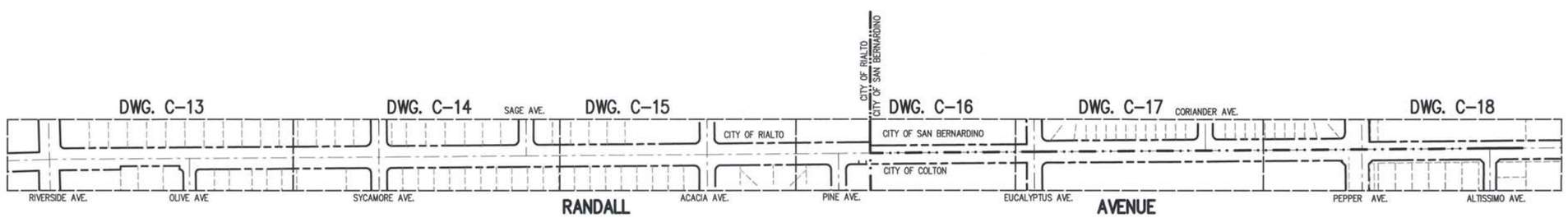

INDEX MAP

SCALE: 1" = 250'

DIAL 811
DIGALERT
UNDERGROUND SERVICE ALERT
PLAY IT SAFE. DIAL BEFORE YOU DIG!
AT LEAST TWO WORKING DAYS PRIOR TO EXCAVATING

REGISTERED PROFESSIONAL ENGINEER
CHRISTOPHER SHEM RAWES
Exp. 6/30/2014
No. 69578
CIVIL
STATE OF CALIFORNIA
6/18/14

PLANS PREPARED BY:

General Civil, Transportation, Municipal, Water and Wastewater Engineering, Planning, Construction Management, and Surveying

118 West Lime Avenue
Monrovia, Ca. 91016
Phone: (626) 357-0588
Fax: (626) 303-7957

CIVILTEC engineering inc.
Monrovia • Prescott • Phoenix

ERM

REV	DATE	REVISION	APPR'D	REV BY

GROUNDWATER EXTRACTION AND TREATMENT SYSTEM COMBINED REMEDY SOURCE AREA OPERABLE UNIT, ROCKETS, FIREWORKS, AND FLARES SUPERFUND SITE

SCALE	AS SHOWN	DESIGNED BY	JM/BS/BO/CD	DRAWN BY	JM/BS/CD	DRAWING NUMBER	
DATE	SCALE	CHECKED	BO/CSH	APPROVED		JOB NUMBER	2013175.00

REV

SHEET 3

DISCIPLINE NO. G-3

GENERAL INDEX OF PIPING PLANS AND WELL LOCATIONS

ENVIRONMENTAL RESOURCES MANAGEMENT

X:\2013\2013175.00-ERM-RIALTO TREATMENT PLANT EXPANSION\DWG\TREATMENT PLANT\2013175.00 RIALTO-SHT3 G-3 GENERAL INDEX DRAWING.DWG {

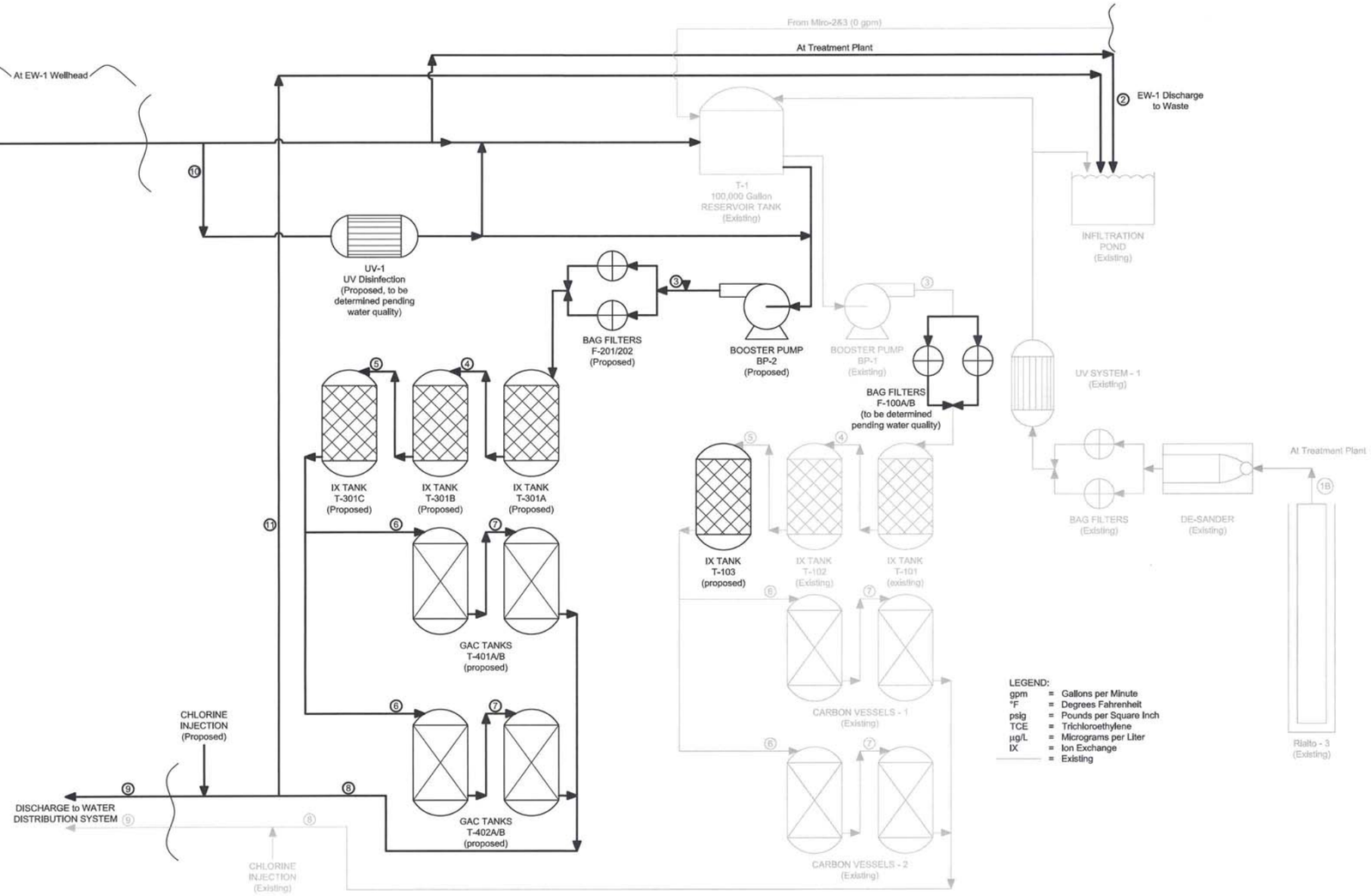

LEGEND:

gpm	=	Gallons per Minute
°F	=	Degrees Fahrenheit
psig	=	Pounds per Square Inch
TCE	=	Trichloroethylene
µg/L	=	Micrograms per Liter
IX	=	Ion Exchange
	=	Existing

Anticipated Average Flow and Concentration Conditions

	flowrate	service	temperature	pressure	maximum concentration (µg/L)	
	(gpm)		(F)	(psig)	TCE	Perchlorate
1A	1700	EW-1 Groundwater Extraction	70	5-10	10	239
1B	1300	Rialto-3 Groundwater Extraction	70	5-10	4	25
2	200 - 2400	Discharge to Waste - EW-1	70	5-10	10	239
3	1500	IX Influent	70	5-10	7	146
4	1500	IX Midpoint 1	70	5-10	7	<4 - 146
5	1500	IX Midpoint 2	70	5-10	7	<4
6	750	Carbon Influent	70	5-10	7	<4
7	750	Carbon Midpoint	70	5-10	<2.5	<4
8	1500	Carbon Effluent	70	5-10	<2.5	<4
9	1500	Groundwater Treated Discharge	70	5-10	<2.5	<4
10	200 - 2400	Influent EW-1 Development and Testing	70	5-10	10	239
11	200 - 2400	Effluent EW-1 Development and Testing	70	5-10	<2.5	<4

Maximum or Worst Case Concentration Conditions

	flowrate	service	temperature	pressure	maximum concentration (µg/L)	
	(gpm)		(F)	(psig)	TCE	Perchlorate
1A	1700	EW-1 Groundwater Extraction	70	5-10	10	239
1B	0	Rialto-3 Groundwater Extraction	-	-	-	-
2	200 - 2400	Discharge to Waste - EW-1	70	5-10	10	239
3	850	IX Influent	70	5-10	10	239
4	850	IX Midpoint 1	70	5-10	10	<4 - 239
5	850	IX Midpoint 2	70	5-10	10	<4
6	425	Carbon Influent	70	5-10	10	<4
7	425	Carbon Midpoint	70	5-10	<2.5	<4
8	850	Carbon Effluent	70	5-10	<2.5	<4
9	850	Groundwater Treated Discharge	70	5-10	<2.5	<4
10	200 - 2400	Influent EW-1 Development and Testing	70	5-10	10	239
11	200 - 2400	Effluent EW-1 Development and Testing	70	5-10	<2.5	<4

Maximum or Worst Case Flow Conditions

	flowrate	service	temperature	pressure	maximum concentration (µg/L)	
	(gpm)		(F)	(psig)	TCE	Perchlorate
1A	2040	EW-1 Groundwater Extraction	70	5-10	10	239
1B	1850	Rialto-3 Groundwater Extraction	70	5-10	4	25
2	200 - 2400	Discharge to Waste - EW-1	70	5-10	10	239
3	1945	IX Influent	70	5-10	7	137
4	1945	IX Midpoint 1	70	5-10	7	<4 - 137
5	1945	IX Midpoint 2	70	5-10	7	<4
6	972	Carbon Influent	70	5-10	7	<4
7	972	Carbon Midpoint	70	5-10	<2.5	<4
8	1945	Carbon Effluent	70	5-10	<2.5	<4
9	1945	Groundwater Treated Discharge	70	5-10	<2.5	<4
10	200 - 2400	Influent EW-1 Development and Testing	70	5-10	10	239
11	200 - 2400	Effluent EW-1 Development and Testing	70	5-10	<2.5	<4

NOTES:
1. ACTUAL EFFLUENT DISCHARGE LIMITS WILL BE BASED UPON FUTURE AMENDMENT OF THE EXISTING CALIFORNIA DEPARTMENT OF PUBLIC HEALTH (CDPH) PERMIT 71-009 TO PROVIDE FOR THE EXISTING COUNTY CR-3 SYSTEM, EXTRACTION FROM NEW WELLS, AND EXPANSION OF THE TREATMENT SYSTEM.

DIAL 811
DIGALERT
UNDERGROUND SERVICE ALERT
PLAY IT SAFE. DIAL BEFORE YOU DIG!
AT LEAST TWO WORKING DAYS PRIOR TO EXCAVATING

REGISTERED PROFESSIONAL ENGINEER
CHRISTOPHER SHEM HAWES
Exp. 6/30/2014
No. 69578
CIVIL
STATE OF CALIFORNIA
6/18/14

PLANS PREPARED BY:

General Civil, Transportation, Municipal, Water and Wastewater Engineering, Planning, Construction Management, and Surveying

118 West Lime Avenue
Monrovia, Ca. 91016
Phone: (626) 357-0588
Fax: (626) 303-7957

CIVILTEC engineering inc.
Monrovia • Prescott • Phoenix

ERM

REV	DATE	REVISION	APPR'D	REV BY

GROUNDWATER EXTRACTION AND TREATMENT SYSTEM COMBINED REMEDY SOURCE AREA OPERABLE UNIT, ROCKETS, FIREWORKS, AND FLARES SUPERFUND SITE

SCALE	AS SHOWN	DESIGNED BY	BS/BD	DRAWN BY	JAM	DRAWING NUMBER	
DATE	JANUARY 2014	CHECKED	BD/SCH	APPROVED		JOB NUMBER	2013175.00

REV

SHEET 4

PLANT FLOW DIAGRAM

DISCIPLINE NO. G-4

ENVIRONMENTAL RESOURCES MANAGEMENT

N:\ERM\RIALTO DESIGN\PLAN SET\RIALTO G-04 P AND ID.DWG (02-18-14 4:56:24PM)

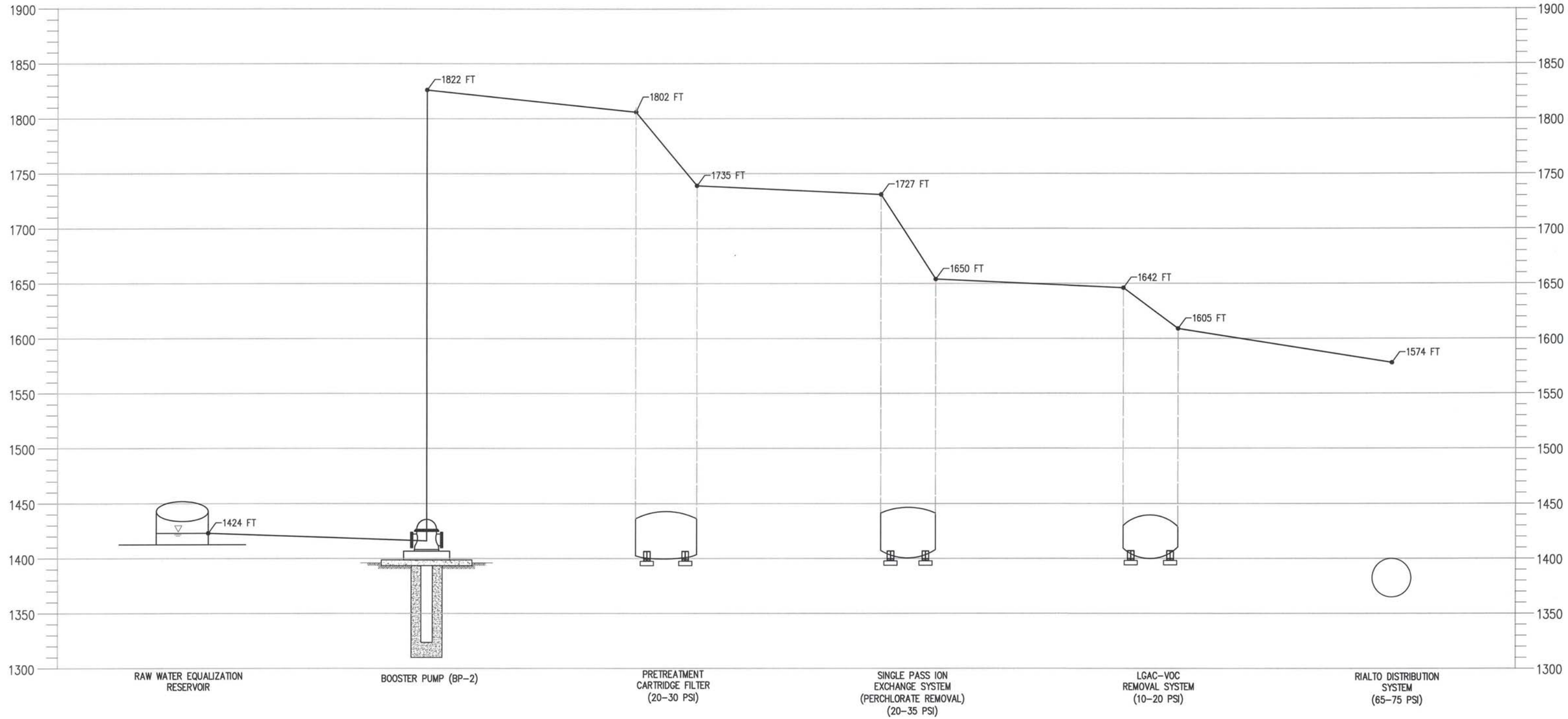

REV	DATE	REVISION	APPR'D	REV BY

DIAL 811
DIGALERT
UNDERGROUND SERVICE ALERT
PLAY IT SAFE. DIAL BEFORE YOU DIG!
AT LEAST TWO WORKING DAYS PRIOR TO EXCAVATING

REGISTERED PROFESSIONAL ENGINEER
CHRISTOPHER SHEM HAWES
Exp. 6/30/2014
No. 69578
CIVIL
STATE OF CALIFORNIA
6/18/14

PLANS PREPARED BY:

General Civil, Transportation, Municipal, Water and Wastewater Engineering, Planning, Construction Management, and Surveying

118 West Lime Avenue
Monrovia, Ca. 91016
Phone: (626) 357-0588
Fax: (626) 303-7957

CIVILTEC engineering inc.
Monrovia • Prescott • Phoenix

ERM

GROUNDWATER EXTRACTION AND TREATMENT SYSTEM COMBINED REMEDY SOURCE AREA OPERABLE UNIT, ROCKETS, FIREWORKS, AND FLARES SUPERFUND SITE

SCALE	AS SHOWN	DESIGNED BY	JM/BS/BD/CD	DRAWN BY	JM/BS/CD	DRAWING NUMBER	
DATE	SCALE	CHECKED	BD/CSH	APPROVED		JOB NUMBER	2013175.00

SYSTEM HYDRAULIC PROFILE

ENVIRONMENTAL RESOURCES MANAGEMENT

REV

SHEET 5

DISCIPLINE NO. G-5

X:\2013\2013175.00-EDM-RIALTO TREATMENT PLANT EXPANSION\DWG\TREATMENT PLANT\2013175.00 RIALTO-SHT5 C-5 SYSTEM HYDRAULIC PROFILE.DWG

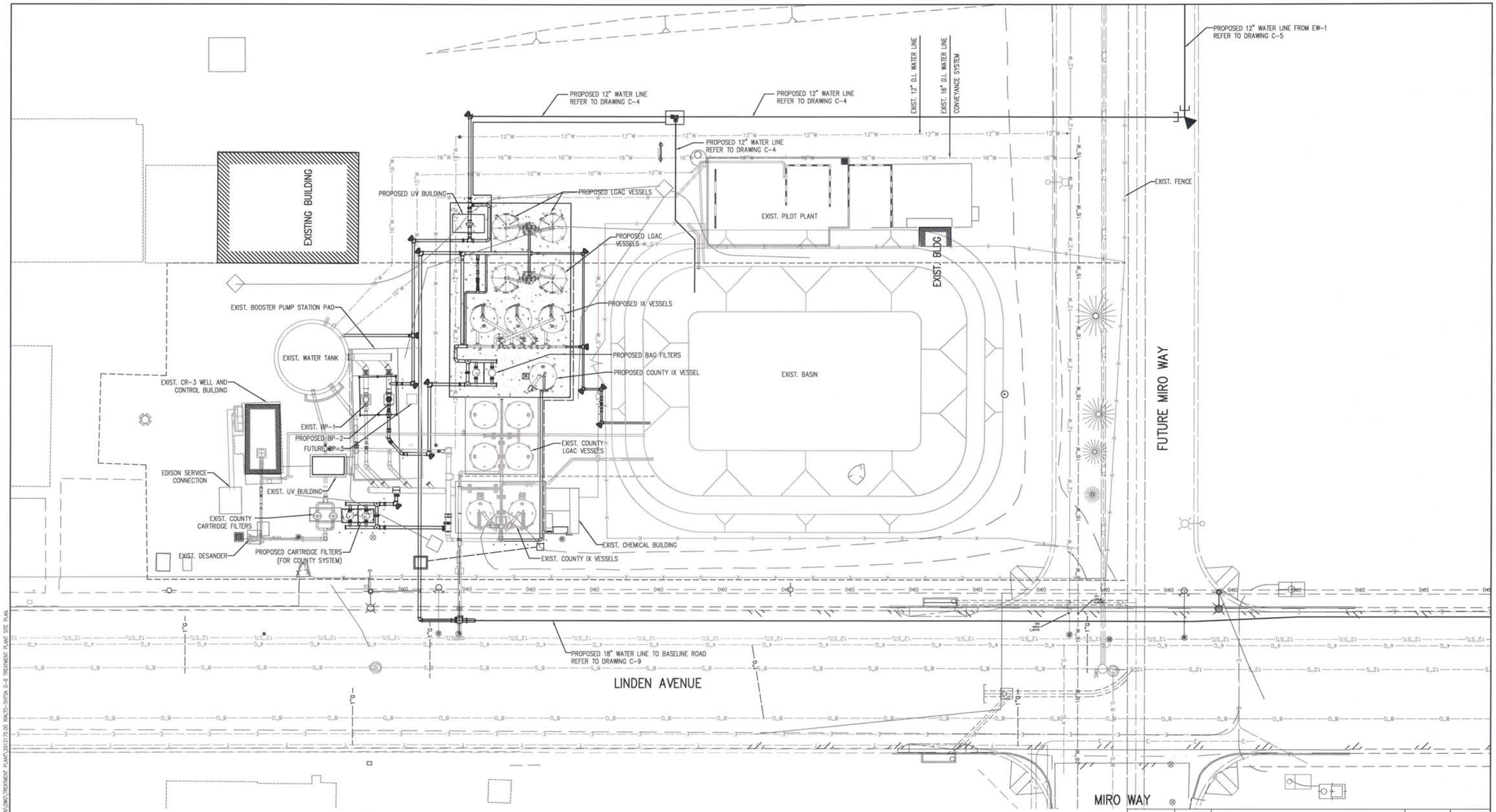

REV	DATE	REVISION	APPR'D	REV BY

DIAL 811
DIGALERT
UNDERGROUND SERVICE ALERT
PLAY IT SAFE. DIAL BEFORE YOU DIG!
AT LEAST TWO WORKING DAYS PRIOR TO EXCAVATING

20' 0 20' 40'
GRAPHIC SCALE

REGISTERED PROFESSIONAL ENGINEER
CHRISTOPHER SHEM HAWES
Exp. 6/30/2014
No. 69578
CIVIL
STATE OF CALIFORNIA
6/18/14

PLANS PREPARED BY:

General Civil, Transportation, Municipal, Water and Wastewater Engineering, Planning, Construction Management, and Surveying

118 West Lime Avenue
Monrovia, Ca. 91016
Phone: (626) 357-0588
Fax: (626) 303-7957

CIVILTEC engineering inc.
Monrovia • Prescott • Phoenix

ERM

GROUNDWATER EXTRACTION AND TREATMENT SYSTEM COMBINED REMEDY SOURCE AREA OPERABLE UNIT, ROCKETS, FIREWORKS, AND FLARES SUPERFUND SITE

SCALE	AS SHOWN	DESIGNED BY	JM/BS/BD/CD	DRAWN BY	JM/BS/CD	DRAWING NUMBER	
DATE	SCALE	CHECKED	BD/CSH	APPROVED		JOB NUMBER	2013175.00

TREATMENT PLANT SITE PLAN

ENVIRONMENTAL RESOURCES MANAGEMENT

REV

SHEET 5A

DISCIPLINE NO. G-6

X:\2013\2013175.00-ERM-RALTO TREATMENT PLANT EXPANSION\DWG\TREATMENT PLANT\2013175.00 RALTO-SHT5A G-6 TREATMENT PLANT SITE PLAN

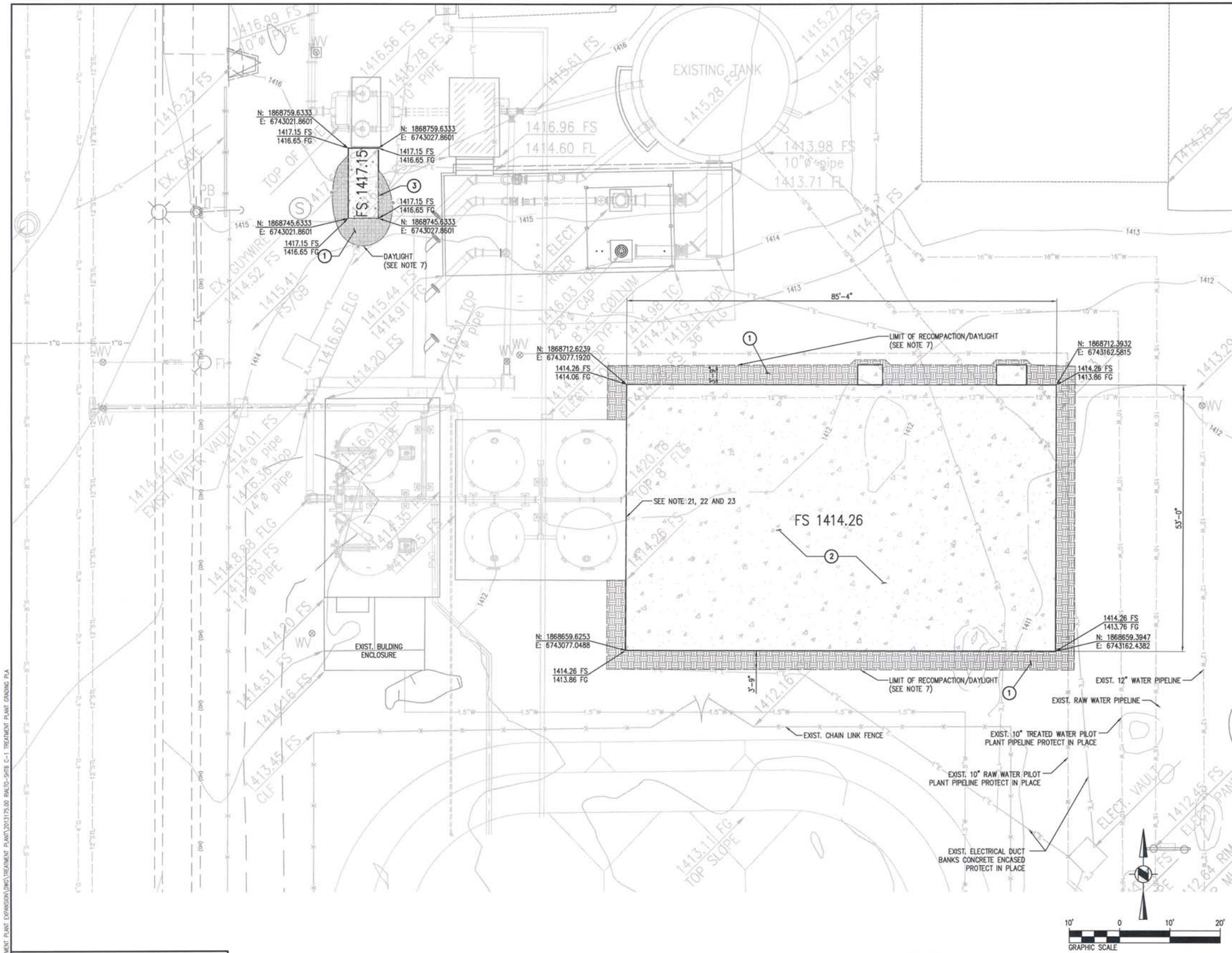

GRADING/EARTHWORK NOTES (DRAWING C-1 & C-2):

1. All EARTHWORK SHALL BE IN ACCORDANCE WITH THE 2013 CALIFORNIA BUILDING CODE.
2. ALL EXCAVATIONS SHALL COMPLY WITH THE CONSTRUCTION SAFETY ORDERS OF THE CALIFORNIA CODE OF REGULATIONS.
3. GRAY CONTOURS INDICATED EXISTING GRADE.
4. ALL ELEVATIONS ARE FINISH GRADE UNLESS OTHERWISE NOTED.
5. ALL FOOTINGS SHALL BE FOUNDED IN UNDISTURBED NATIVE SOIL UNLESS SHOWN OTHERWISE ON THE DRAWING.
6. TEMPORARY CONSTRUCTION SLOPES SHALL BE NO STEEPER THAN 1.5H TO 1V.
7. PERMANENT CUT AND FILL SLOPES SHALL BE NO STEEPER THAN 2H TO 1V.
8. TEMPORARY AND PERMANENT CUT AND FILL SLOPES EXCEEDING 25 FEET IN HEIGHT SHALL INCLUDE AN 8-FOOT-WIDE BENCH SPACED AT INTERVALS OF 25 FEET MEASURED VERTICALLY.
9. ALL AREAS TO BE GRADED SHALL BE CLEARED AND GRUBBED. GRUBBING SHALL CONSIST OF REMOVING ALL TREE STUMPS AND 1-1/2 INCH AND LARGER ROOTS 3 FEET BELOW THE EXISTING GROUND SURFACE OR SUBGRADE, WHICHEVER IS DEEPER.
10. ANY EXISTING STRUCTURAL OR LANDSCAPE ELEMENTS WITHIN THE LIMIT OF THE GRADING AREAS, INCLUDING ANY FOUNDATION ELEMENTS, SHALL BE DEMOLISHED OR REMOVED FROM THE SITE. ANY UTILITIES, WHETHER ACTIVE OR INACTIVE, SHALL BE IDENTIFIED AND REMOVED FROM THE SITE OR RELOCATED PER PROJECT PLANS AND SPECIFICATION.
11. UNSURCHARGED, TEMPORARY VERTICAL EXCAVATIONS CAN BE A MAXIMUM DEPTH OF 5 FEET. UNSURCHARGED EXCAVATIONS GREATER THAN 5 FEET AND TO A MAXIMUM OF 25 FEET SHALL BE SLOPED AT A 1 1/2 : 1(H:V) OR FLATTER INCLINATION FROM THE GROUND SURFACE TO THE BOTTOM OF THE EXCAVATION OR SHOULD BE SHORED. SLOPED AND VERTICAL EXCAVATION SECTIONS SHALL NOT BE COMBINED.
12. REMOVE ALL DELETERIOUS MATERIAL, ORGANIC AND NON-ORGANIC, FROM THE BOTTOM OF EXCAVATION, PRIOR TO THE PLACEMENT OF ANY FILL MATERIALS.
13. FILL SOILS SHALL CONSIST OF ON-SITE SOILS OR APPROVED IMPORT MATERIAL PER SPECIFICATION. IMPORT MATERIAL SHALL BE TESTED AND APPROVED BY THE ENGINEER PRIOR TO IMPORTING TO THE JOB SITE. THE ENGINEER SHALL BE NOTIFIED A MINIMUM OF THREE WORKING DAYS PRIOR TO SCHEDULED IMPORTING OF SOIL TO THE PROJECT SITE.
14. PLACE FILL MATERIAL IN LOOSE LIFTS NOT EXCEEDING 8 INCHES IN THICKNESS BEFORE COMPACTION.
15. AT THE TIME OF COMPACTION, THE MOISTURE CONTENT OF FILL MATERIAL SHALL BE WITHIN 2% OF IT'S OPTIMUM MOISTURE CONTENT AS DETERMINED BY ASTM D-1557.
16. ALL EXPOSED EXCAVATION BOTTOMS SHALL BE SCARIFIED TO A MINIMUM DEPTH OF 6 INCHES AND COMPACTED TO A MINIMUM 95% RELATIVE COMPACTION AS DETERMINED BY ASTM D1557. THE EXCAVATION BOTTOM SHALL BE OBSERVED, TESTED, AND APPROVED BY A REPRESENTATIVE OF THE CITY OF RIALTO, ENGINEERING GROUP, OR GRADING INSPECTOR PRIOR TO PLACEMENT OF FILL.
17. BACKFILL WITHIN 2 FEET OF ANY STRUCTURE SHALL BE HAND COMPACTED WITH MECHANICAL TAMPERS.
18. WHERE COMPACTION IS LESS THAN REQUIRED, THE FILL MATERIAL IN THE VICINITY OF THE FAILED TEST SHALL BE RE-ROLLED OR SHALL BE REMOVED, THE MOISTURE CONTENT ADJUSTED IF NECESSARY, AND THE AREA RE-COMPACTED AND RE-TESTED UNTIL THE REQUIRED COMPACTION IS OBTAINED.
19. THE FOLLOWING QUANTITY ESTIMATES ARE PROVIDED FOR THE PURPOSE OF CALCULATING GRADING PLAN CHECK AND GRADING PERMIT FEES ONLY.
    EARTHWORK QUANTITIES:
    (RAW DIRT ONLY)

EXCAVATION (CUT) =	521	CUBIC YARDS
BACKFILL (FILL) =	503	CUBIC YARDS
EXPORT =	18	CUBIC YARDS
IMPORT =	0	CUBIC YARDS

    VOLUMES SHOWN ABOVE AND IN THE DRAWINGS ARE APPROXIMATE ONLY.THE CONTRACTOR IS RESPONSIBLE FOR THE VERIFICATION OF QUANTITIES FOR HIS OWN PURPOSES OR USE.
20. "REGISTERED DEPUTY GRADING INSPECTOR IS REQUIRED ON GRADING AND FOUNDATION EARTHWORK WHERE (SITE EXCEEDS 60,000 SF.) (CUT OR FILL SLOPES EXCEED 2:1) (CUT EXCEED 40 FT. IN HEIGHT AND WITHIN 20 FT. OF A PROPERTY LINE) (PROJECTS INVOLVE UNUSUAL HAZARDS) (SHORING WORK INCLUDING SLOT-CUTS)". (1704).
21. PROVIDE SHORING AND CONDUIT/PIPE SUPPORTS AS NECESSARY TO PROTECT EXISTING FACILITIES IN PLACE.
22. TEMPORARY EXCAVATIONS AND/OR SHORING MAY NEED TO BE INSTALLED PRIOR TO ANY WORK BEING CONDUCTED WITH UTILITY TRENCHES AND THE OVEREXCAVATION ZONE. AS PART OF THE MEANS-AND-METHODS OF CONSTRUCTION, THE CONTRACTOR IS RESPONSIBLE FOR ALL TEMPORARY EXCAVATIONS AND TRENCHES EXCAVATED AT THE SITE AND IS RESPONSIBLE FOR DESIGN OF TEMPORARY SHORING. SHORING, BRACING AND BENCHING SHOULD BE PERFORMED BY THE CONTRACTOR IN ACCORDANCE WITH THE CURRENT EDITION OF THE CALIFORNIA CONSTRUCTION SAFETY ORDERS. THE CONTRACTOR SHOULD FORWARD TEMPORARY EXCAVATION SUPPORT SYSTEM PLANS TO THE ENGINEER FOR PRE CONSTRUCTION REVIEW.
23. VERTICAL CUTS MAY BE SUPPORTED BY SEVERAL METHODS INCLUDING CROSS-BRACED HYDRAULIC SHORING, CONVENTIONAL SHIELDS, SHEET PILES, SOLDIER PILES AND WOOD LAGGING AND OR SLOT CUTTING TO REDUCE OR ELIMINATE SHORING. THE CHOICE SHOULD BE LEFT TO THE CONTRACTOR'S JUDGMENT SINCE ECONOMIC CONSIDERATIONS AND/OR THE INDIVIDUAL CONTRACTOR'S CONSTRUCTION EXPERIENCE MAY DETERMINE WHICH METHOD IS MORE ECONOMICAL AND/OR APPROPRIATE. CONTRACTOR SHALL REFERENCE GEOTECHNICAL REPORT IN PREPARATION OF THE METHODS.

CONSTRUCTION NOTES (THIS SHEET)

1. COMPACTED FILL SHALL BE NATIVE COMPACTED TO 95% RELATIVE DENSITY.
2. CONSTRUCT CONCRETE PAD PER DRAWING S-2.
3. CONSTRUCT CONCRETE PAD PER DETAIL 6 DRAWING S-10.

REV	DATE	REVISION	APPR'D	REV BY

DIAL 811
DIGALERT
UNDERGROUND SERVICE ALERT
PLAY IT SAFE. DIAL BEFORE YOU DIG!
AT LEAST TWO WORKING DAYS PRIOR TO EXCAVATING

REGISTERED PROFESSIONAL ENGINEER
CHRISTOPHER SHEM HAWES
Exp. 6/30/2014
No. 69578
CIVIL
STATE OF CALIFORNIA
12/18/14

PLANS PREPARED BY:
General Civil, Transportation, Municipal, Water and Wastewater Engineering, Planning, Construction Management, and Surveying
118 West Lime Avenue
Monrovia, Ca. 91016
Phone: (626) 357-0588
Fax: (626) 303-7957
CIVILTEC engineering inc.
Monrovia • Prescott • Phoenix
ERM

GROUNDWATER EXTRACTION AND TREATMENT SYSTEM COMBINED REMEDY SOURCE AREA OPERABLE UNIT, ROCKETS, FIREWORKS, AND FLARES SUPERFUND SITE

SCALE	AS SHOWN	DESIGNED BY	JM/BS/BD/CD	DRAWN BY	JM/BS/CD	DRAWING NUMBER	
DATE	SCALE	CHECKED	BD/CSH	APPROVED		JOB NUMBER	2013175.00

REV
SHEET 6
DISCIPLINE NO. C-1

TREATMENT PLANT GRADING
PLAN, SECTIONS AND DETAILS

ENVIRONMENTAL RESOURCES MANAGEMENT

X:\2013\2013175.00-ERM-RIALTO TREATMENT PLANT EXPANSION\DWG\TREATMENT PLANT\2013175.00 RIALTO-SHTS C-1 TREATMENT PLANT GRADING PLA

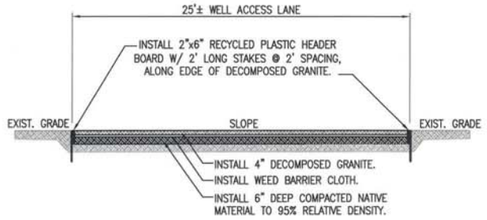

SECTION –WELL BUILDING ACCESS LANE (A/–)

NOT TO SCALE

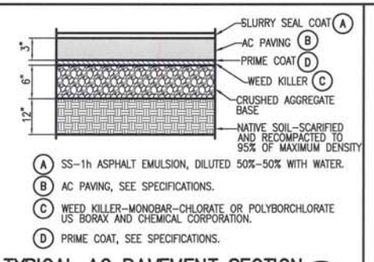

TYPICAL AC PAVEMENT SECTION (B/–)

NOT TO SCALE

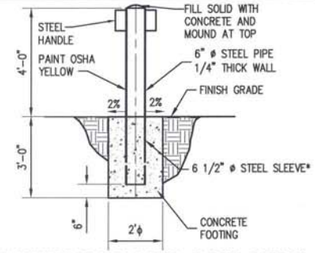

REMOVABLE BOLLARD POST DETAIL (1/–)

NOT TO SCALE

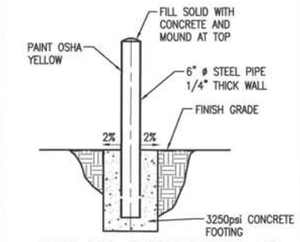

BOLLARD POST DETAIL (2/C–2)

NOT TO SCALE

LINE TABLE		
NO.	LENGTH	BEARING
1	9.42'	S 81° 12' 37" E
2	19.47'	S 70° 35' 32" E
3	28.06'	N 23° 15' 08" W
4	24.00'	S 57° 24' 13" W
5	6.13'	S 36° 16' 25" E
6	13.92'	N 3° 20' 01" E
7	19.68'	N 86° 55' 00" W
8	2.39'	N 77° 40' 22" W
9	10.06'	N 4° 13' 29" E
10	11.07'	S 86° 40' 10" E
11	44.55'	S 3° 46' 07" W
12	29.25'	N 0° 00' 00" W
13	49.10'	S 0° 00' 00" E
14	7.31'	N 0° 00' 00" E
15	21.11'	S 0° 29' 58" E
16	19.26'	S 89° 41' 54" W
17	70.32'	N 0° 11' 13" W
18	7.69'	S 64° 26' 14" E
19	8.09'	N 62° 47' 55" W

CURVE TABLE				
NO.	LENGTH	RADIUS	DELTA	TANGENT
150	72.65'	68.88'	60° 25' 38"	40.11'
151	71.28'	68.04'	60° 01' 16"	39.13'
152	17.00'	66.67'	14° 36' 40"	8.55'
153	17.00'	66.67'	14° 36' 40"	8.55'
154	10.67'	68.04'	68° 58' 54"	5.34'
155	28.61'	80.96'	20° 15' 01"	14.46'
156	4.69'	10.67'	25° 12' 01"	2.38'
157	2.80'	7.03'	22° 51' 00"	1.42'
158	32.29'	64.11'	28° 51' 23"	16.49'
159	1.00'	104.58'	0° 32' 52"	0.50'
160	2.38'	112.58'	1° 12' 39"	1.19'

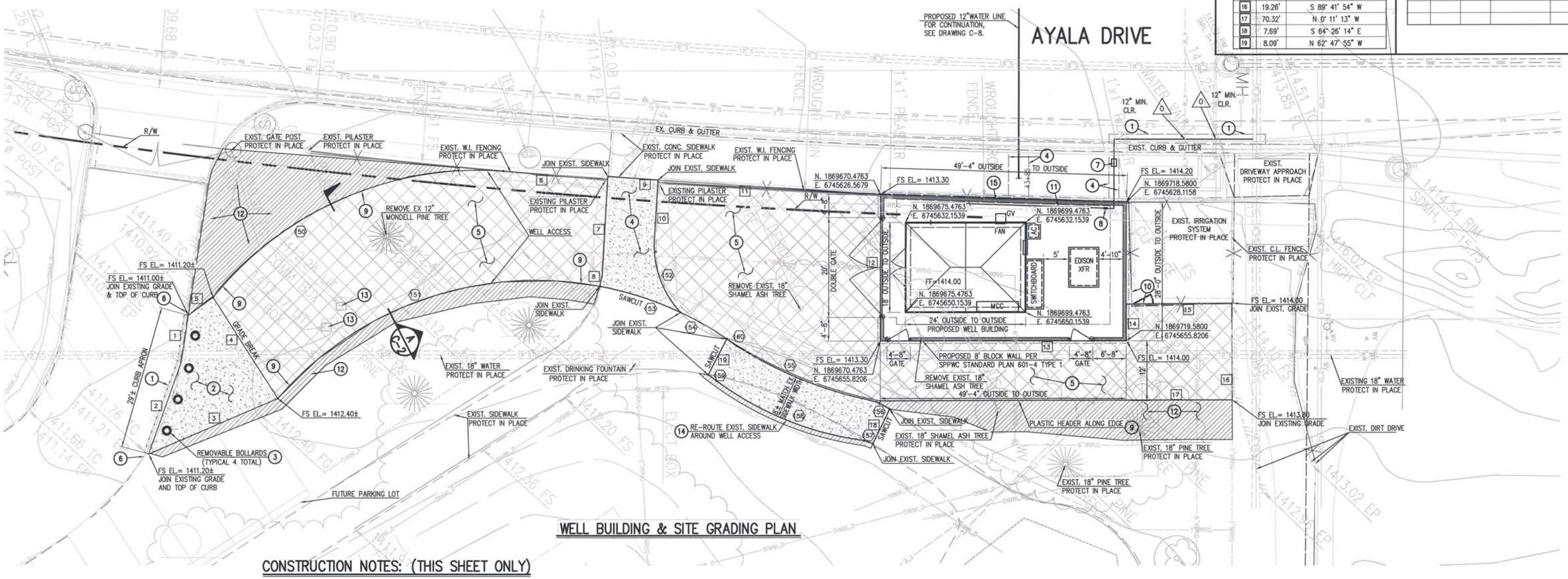

WELL BUILDING & SITE GRADING PLAN

CONSTRUCTION NOTES: (THIS SHEET ONLY)

1. SAWCUT AND INSTALL NEW ASPHALT PER SPPWC STD. PLAN NO. 133-3 CASE 11, SECTION "B" ON DWG. C-2.
2. CONSTRUCT DRIVEWAY APPROACH PER CITY OF RIALTO STD. NO. RS-123-0, DETAIL 7 ON DWG. C-22.
3. INSTALL REMOVABLE BOLLARDS PER DETAIL 1 ON DRAWING C-2.
4. SAWCUT, REMOVE AND REPLACE 6" CONCRETE SIDEWALK PER CITY OF RIALTO STD. NO. RS-119C-0, DETAIL 4 ON DWG. C-22.
5. INSTALL DECOMPOSED GRANITE PER SECTION "A" ON THIS DRAWING, 4,337 SQUARE FEET.
6. REPLACE EXISTING CONCRETE CURB AS NECESSARY PER CITY OF RIALTO RS-116-0, DETAIL 6 ON DWG. C-22.
7. INSTALL 2" WATER SERVICE PER CITY OF RIALTO STD. RW-700-0, DETAIL 5 ON DWG. C-22.
8. INSTALL BACK FLOW DEVICE DETAIL 3 ON DWG. M-13.
9. INSTALL 6" RECYCLED PLASTIC HEADER PER SECTION "A" ON THIS DRAWING.
10. SALVAGE AND INSTALL FENCE AND RELOCATED 8'-0" LONG SINGLE LEAF CHAIN LINK FENCE GATE PER DETAIL 1 ON DWG. C-23.
11. INSTALL 2" TYPE K COPPER TUBING AND CONNECTION TO EX. WATER LINE.
12. REMOVE EXISTING LANDSCAPING AND IRRIGATION LINES AND RESTORE AREA TO NEW CONDITIONS & LOCATIONS.
13. REMOVE & REPLACE EXIST. UTILITY BOX WITH PRECAST CONCRETE TRAFFIC RATED BOX & COVER, ADJUST TO NEW FINISHED GRADE.
14. CONSTRUCT 6" CONCRETE SIDEWALK TO NEAREST JOINT PER CITY OF RIALTO STD. NO. RS-119C-0, DETAIL 4 ON DWG. C-22.
15. REMOVE EXISTING WROUGHT IRON FENCING AND CMU PILASTER TO LIMIT OF NEW CMU WALL.

NOTES:

1. ANY DAMAGED FENCING SHALL BE REPLACED IN KIND.
2. REMOVE AND RELOCATE ANY AND ALL EXISTING IRRIGATION LINES AND CONTROLLERS AFFECTED IN WELL SITE CONSTRUCTION AREA TO PRE EXISTING CONDITIONS.
3. REMOVE AND REPLACE EXISTING UTILITY BOX THOSE ARE AFFECTED DURING CONSTRUCTION WITH PRECAST CONCRETE TRAFFIC RATED BOX AND COVER. ADJUST TO NEW FINISHED GRADE.

4' 0 4' 8'
GRAPHIC SCALE

REV	DATE	REVISION	APPR'D	REV BY

DIAL 811 DIGALERT
UNDERGROUND SERVICE ALERT
PLAY IT SAFE. DIAL BEFORE YOU DIG!
AT LEAST TWO WORKING DAYS PRIOR TO EXCAVATING

REGISTERED PROFESSIONAL ENGINEER CHRISTOPHER SHEM HAWES Exp. 6/30/2014 No. 69578 CIVIL STATE OF CALIFORNIA 6/18/14

PLANS PREPARED BY:
General Civil, Transportation, Municipal, Water and Wastewater Engineering, Planning, Construction Management, and Surveying
118 West Lime Avenue
Monrovia, Ca. 91016
Phone: (626) 357-0588
Fax: (626) 303-7957
CIVILTEC engineering inc.
Monrovia • Prescott • Phoenix
ERM

GROUNDWATER EXTRACTION AND TREATMENT SYSTEM COMBINED REMEDY SOURCE AREA OPERABLE UNIT, ROCKETS, FIREWORKS, AND FLARES SUPERFUND SITE

SCALE	AS SHOWN	DESIGNED BY	JM/BS/BD/CD	DRAWN BY	JM/BS/CD	DRAWING NUMBER	
DATE	SCALE	CHECKED	BD/CSH	APPROVED		JOB NUMBER	2013175.00

REV

SHEET 7

DISCIPLINE NO. C-2

WELL SITE IMPROVEMENTS AND PRECISE GRADING PLAN

ENVIRONMENTAL RESOURCES MANAGEMENT

J:\2013\2013175.00-ERM-RIALTO TREATMENT PLANT EXPANSION\DWG\TREATMENT PLANT\2013175.00 RIALTO-SHT7 C-2 WELLSITEIMPROVEMENTS AND PR

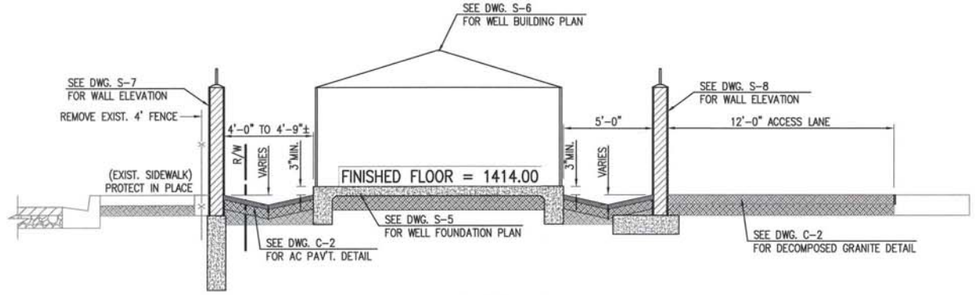

SECTION AA
NOT TO SCALE

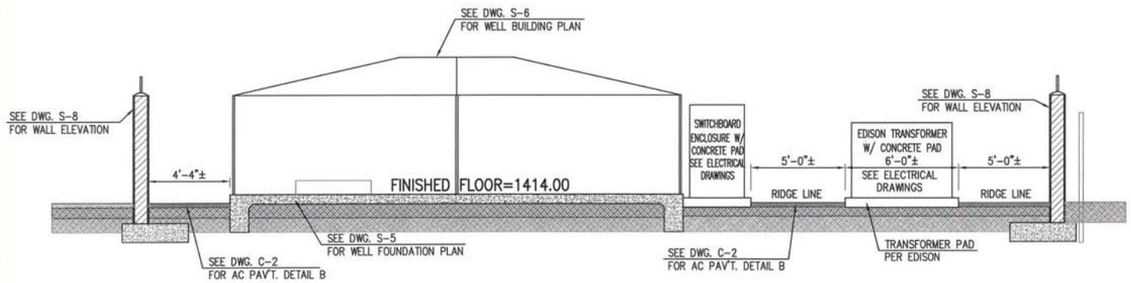

SECTION BB
NOT TO SCALE

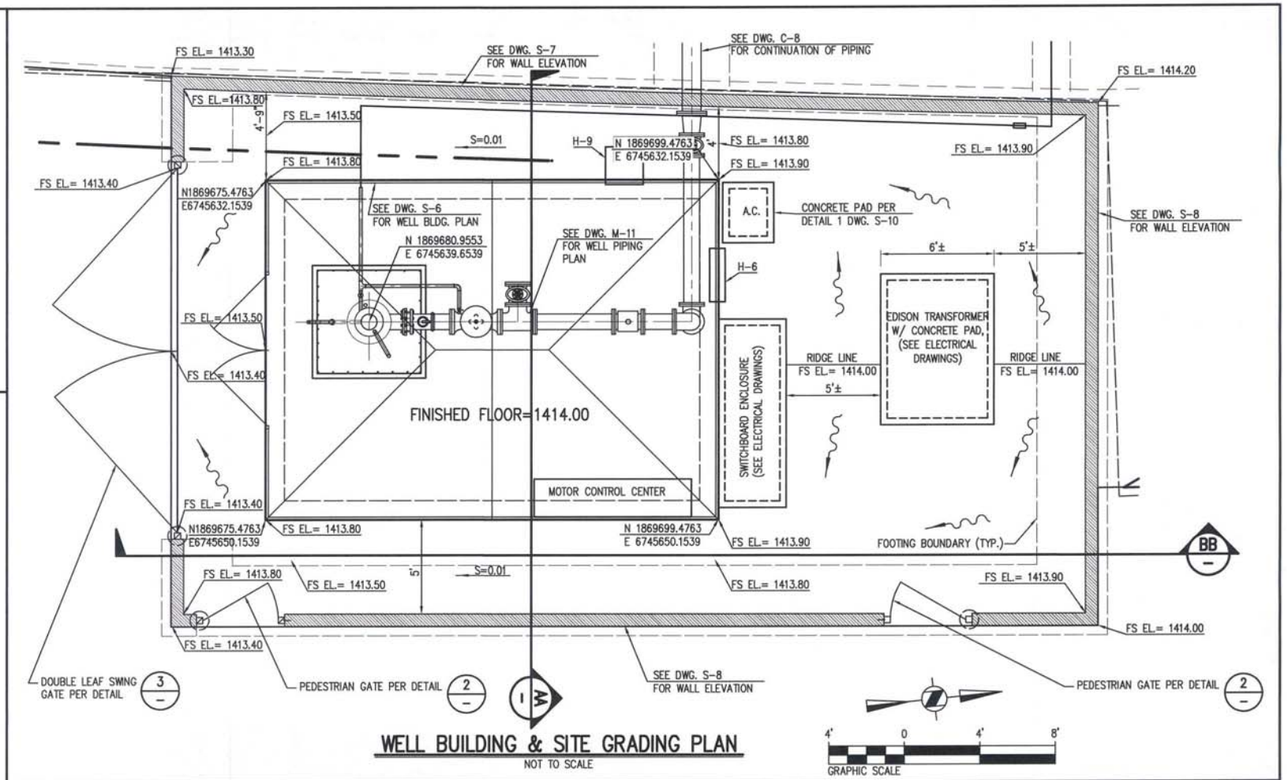

WELL BUILDING & SITE GRADING PLAN
NOT TO SCALE

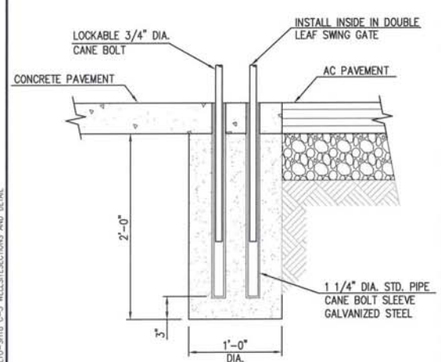

CANE BOLT FOOTING DETAIL 4/C-3
NOT TO SCALE

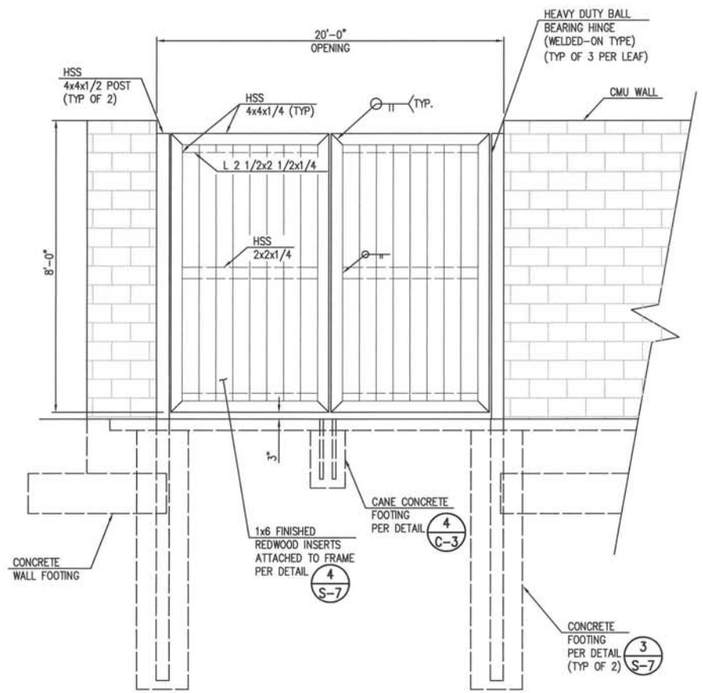

DOUBLE LEAF SWING GATE DETAIL 3/C-3
NOT TO SCALE

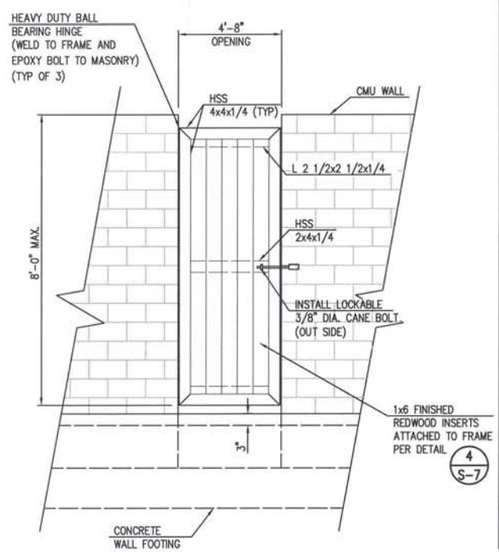

PEDESTRIAN GATE DETAIL 2/C-3
NOT TO SCALE

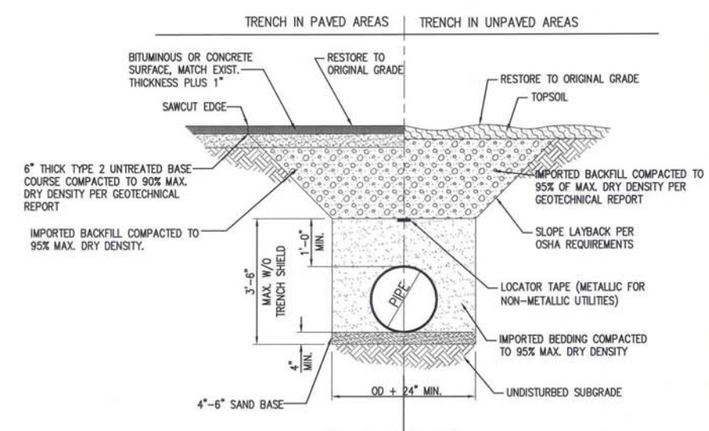

TYPICAL TRENCH DETAIL 1/–
NOT TO SCALE

REV	DATE	REVISION	APPR'D	REV BY

DIAL 811
DIGALERT
UNDERGROUND SERVICE ALERT
PLAY IT SAFE. DIAL BEFORE YOU DIG!
AT LEAST TWO WORKING DAYS PRIOR TO EXCAVATING

REGISTERED PROFESSIONAL ENGINEER
CHRISTOPHER SHEM HAWES
Exp. 6/30/2014
No. 69578
CIVIL
STATE OF CALIFORNIA
1/18/14

PLANS PREPARED BY:

General Civil, Transportation, Municipal, Water and Wastewater Engineering, Planning, Construction Management, and Surveying

118 West Lime Avenue
Monrovia, Ca. 91016
Phone: (626) 357-0588
Fax: (626) 303-7957

CIVILTEC engineering inc.
Monrovia • Prescott • Phoenix

ERM

GROUNDWATER EXTRACTION AND TREATMENT SYSTEM COMBINED REMEDY SOURCE AREA OPERABLE UNIT, ROCKETS, FIREWORKS, AND FLARES SUPERFUND SITE

SCALE	AS SHOWN	DESIGNED BY	JM/BS/BD/CD	DRAWN BY	JM/BS/CD	DRAWING NUMBER	
DATE	SCALE	CHECKED	BD/CSH	APPROVED		JOB NUMBER	2013175.00

REV

SHEET 8

WELL SITE SECTIONS AND DETAILS

DISCIPLINE NO. C-3

ENVIRONMENTAL RESOURCES MANAGEMENT

A:\2013\2013175.00-ERM-RIALTO TREATMENT PLANT EXPANSION\DWG\TREATMENT PLANT\2013175.00 RIALTO-SHTB C-3 WELLSITESECTIONS AND DETAIL

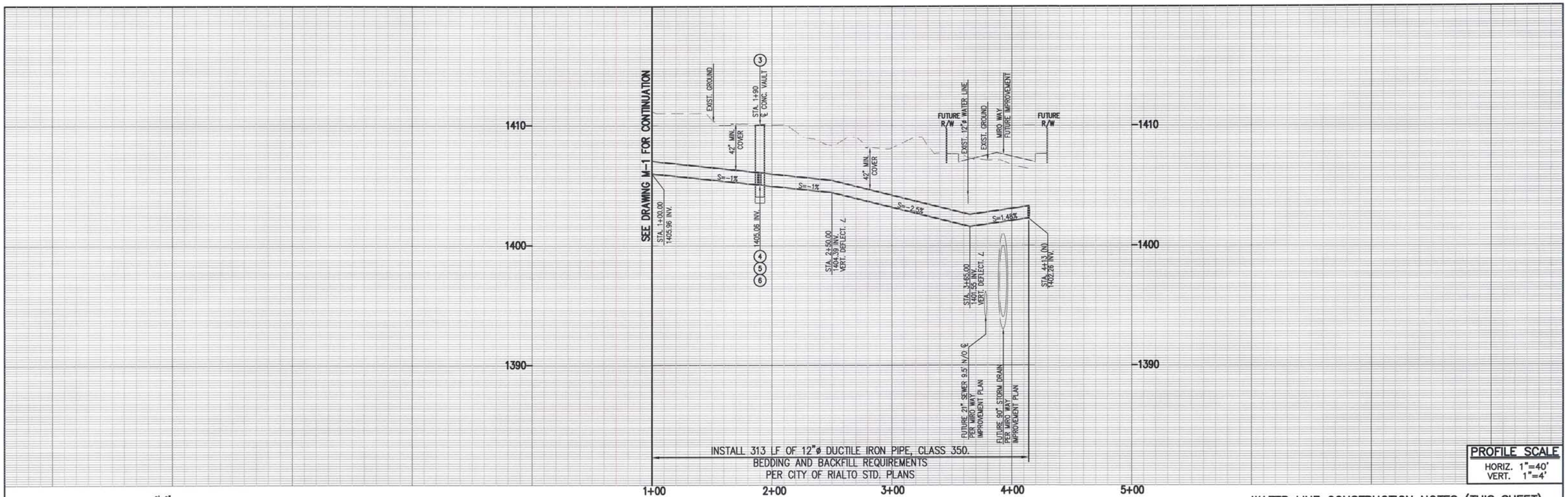

PROFILE SCALE
HORIZ. 1"=40'
VERT. 1"=4'

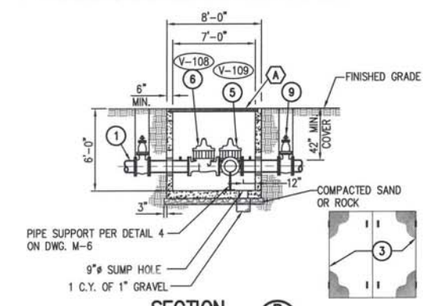

SECTION B
NOT TO SCALE

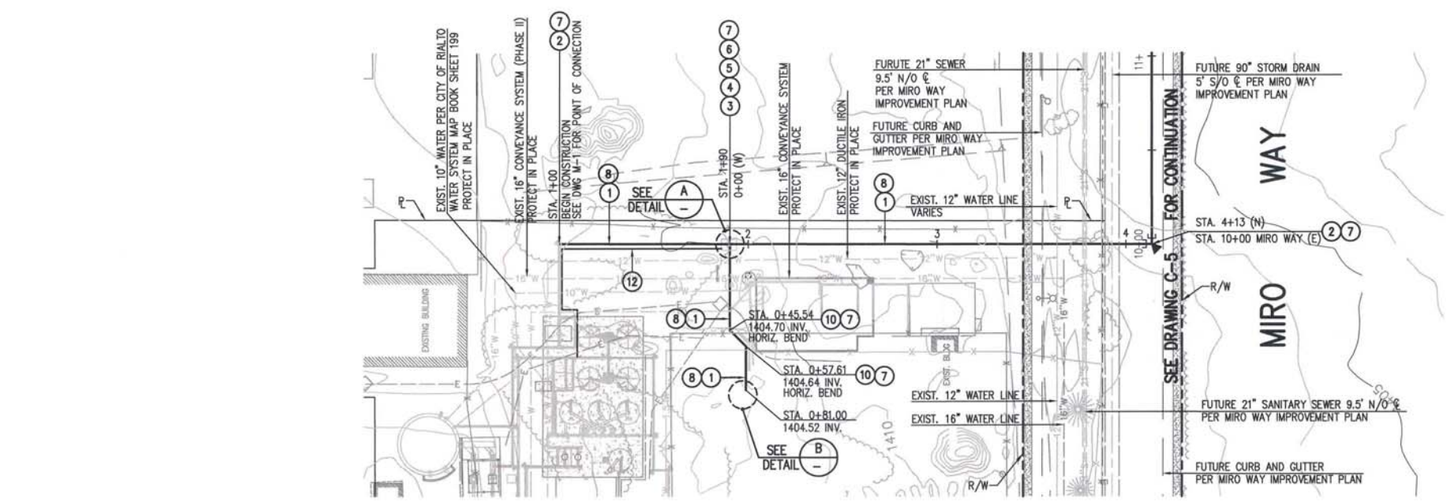

WATER LINE CONSTRUCTION NOTES (THIS SHEET)

1. INSTALL 12"ø DUCTILE IRON PIPE, CLASS 350.
2. INSTALL 12"-90° DUCTILE IRON BEND, MJxMJ.
3. CONSTRUCT 8'x8'x6'-6" CONCRETE VAULT, METER READING LID, LADDER ASSEMBLY, H20 TRAFFIC RATED DOUBLE DOOR ACCESS COVER PER CITY OF RIALTO STD NO. RW-103-OW, SEE DETAIL 1 ON DWG. C-22.
4. INSTALL 12"x12"x12" DUCTILE IRON TEE, FLGxFLGxFLG.
5. INSTALL 12" CLA-VAL PER SPECIFICATIONS.
6. INSTALL 12" CLA-VAL PER SPECIFICATIONS.
7. INSTALL CONCRETE THRUST BLOCK PER CITY OF RIALTO ST. NO. RW-722-0. SEE DETAIL 1 ON DWG. C-19.
8. PROVIDE TRENCHING PER CITY OF RIALTO STD NO. RS-147-0, SEE DETAIL 3 ON DWG. C-19.
9. INSTALL 12" RESILIENT GATE VALVE, FLG.xFGL., WITH VALVE BOX RISER PER CITY OF RIALTO ST. NO. RW-718-0. SEE DETAIL 2 ON DWG. C-19.
10. INSTALL 12"-45° DUCTILE IRON BEND, MJxMJ.
11. INSTALL TIDEFLEX VALVE, SERIES TF-2 FOR 12" PIPE W/304 SS CLAMPS.
12. INSTALL 1" TYPE K PIPE COPPER FOR SOLENOID.
13. REMOVE AND REPLACE EXIST. RIP RAP TO MATCH EXISTING AS NECESSARY.

NOTES TO THE CONTRACTOR

1. THE CONTRACTOR SHALL POTHOLE, FIELD VERIFY ALL UTILITY CROSSINGS, AND EXISTING WATER LINE AT CONNECTION POINT.
2. THE CONTRACTOR SHALL VERIFY SANITARY SEWER AND OTHER UTILITIES AT THE NEW WATER LINE CROSSING.
3. ROPE PIPE JOINTS TO MAINTAIN HORIZONTAL ALIGNMENT 2 1/2' MAX MAX PER PIPE JOINT.
4. CONTRACTOR SHALL REPLACE ANY DAMAGED TRAFFIC LOOPS AND STRIPING IN KIND.

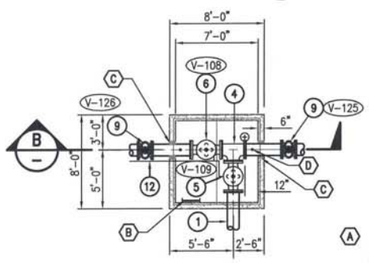

DETAIL A
NOT TO SCALE

(A) INSTALL H20 TRAFFIC RATED DOUBLE DOOR ACCESS COVER PER CITY OF RIALTO STD NO. RW-103-OW, SEE DETAIL 1 ON DWG. C-22.

(B) INSTALL ACCESS LADDER ASSY., HD SK-4-1-25-2 CLASS 1 W/"SAF-T-NOTCH" RAIL, TWO "SAF-T-LOCK" SLEEVE ASSEMBLIES, TWO SAFETY BELTS, & EXTENSION POLE, AND ALL BRACKETS NECESSARY FOR ATTACHING THE RAIL TO THE LADDER, O.A.E.

(C) INSTALL 18" DIA. x 4" WALL SLEEVE WITH WATER STOP NON-SHRINK, WATER TIGHT CAULKING. SEAL ANNULAR OPENING WITH "LINK-SEAL" MECHANICAL WATER SEAL.

(D) DOUBLE STRAP SERVICE SADDLE WITH 1" CORP STOP (FOR TESTING)

NOTE:
VAULT TO BE PLACED IN 6" OF COMPACTED ROCK OR SAND TO INSURE UNIFORM DISTRIBUTION OF SOIL PRESSURE ON FLOOR.

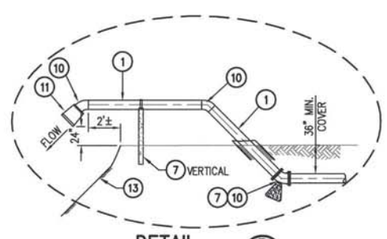

DETAIL B
NOT TO SCALE

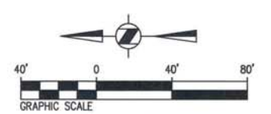

GRAPHIC SCALE

DIAL 811 UNDERGROUND SERVICE ALERT
DIGALERT
PLAY IT SAFE. DIAL BEFORE YOU DIG!
AT LEAST TWO WORKING DAYS PRIOR TO EXCAVATING

REGISTERED PROFESSIONAL ENGINEER — CHRISTOPHER SHEM HAWES — Exp. 6/30/2014 — No. 69578 — CIVIL — STATE OF CALIFORNIA — 6/18/14

PLANS PREPARED BY:
General Civil, Transportation, Municipal, Water and Wastewater Engineering, Planning, Construction Management, and Surveying
118 West Lime Avenue
Monrovia, Ca. 91016
Phone: (626) 357-0588
Fax: (626) 303-7957
CIVILTEC engineering inc.
Monrovia • Prescott • Phoenix

ERM

REV	DATE	REVISION	APPR'D	REV BY

GROUNDWATER EXTRACTION AND TREATMENT SYSTEM COMBINED REMEDY SOURCE AREA OPERABLE UNIT, ROCKETS, FIREWORKS, AND FLARES SUPERFUND SITE

SCALE	AS SHOWN	DESIGNED BY	JM/BS/BD/CD	DRAWN BY	JM/BS/CD	DRAWING NUMBER	
DATE	SCALE	CHECKED	BD/CSH	APPROVED		JOB NUMBER	20131175.00

REV

SHEET 9

DISCIPLINE NO. C-4

TREATMENT PLANT SITE
WATER MAIN PLAN AND PROFILE
STA. 1+00 TO STA. 4+13

ENVIRONMENTAL RESOURCES MANAGEMENT

X:\20131\20131175.00-ERM-RIALTO TREATMENT PLANT EXPANSION\DWG\TREATMENT PLANT\20131175.00 RIALTO-SHTB C-4 MIRO WATER LINE-TREATMENT P

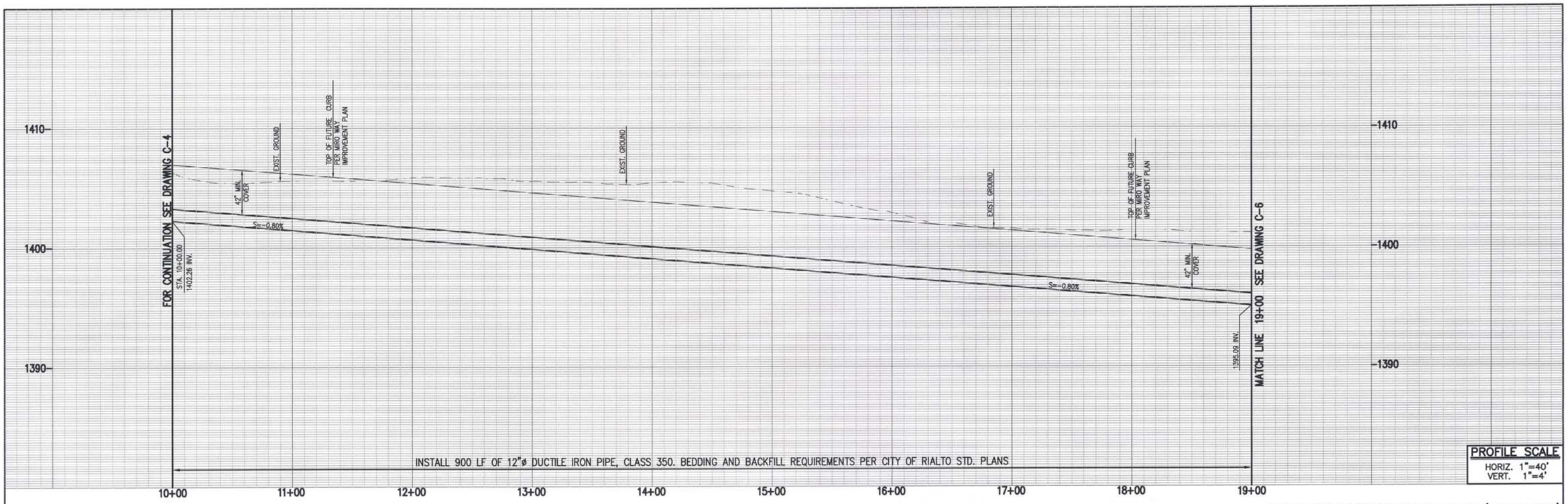

PROFILE SCALE
HORIZ. 1"=40'
VERT. 1"=4'

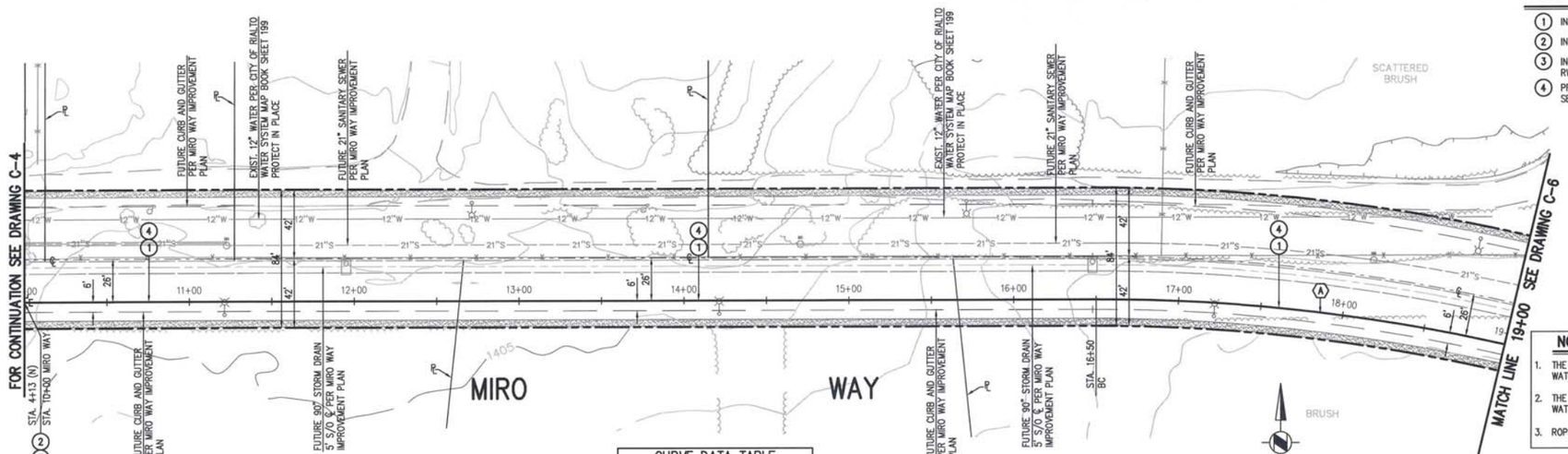

CURVE DATA TABLE				
	Δ	R	L	T
A	66°54'13"	1,05.64'	450.00	–

40' 0 40' 80'
GRAPHIC SCALE

WATER LINE CONSTRUCTION NOTES (THIS SHEET)

1. INSTALL 12"ø DUCTILE IRON PIPE, CLASS 350.
2. INSTALL 12"-90° DUCTILE IRON BEND, MJxMJ.
3. INSTALL CONCRETE THRUST BLOCK PER CITY OF RIALTO STD. NO. RW-722-0. SEE DETAIL 1 ON DWG. C-19.
4. PROVIDE TRENCHING PER CITY OF RIALTO STD. NO. RS-147-0, SEE DETAIL 3 ON DWG. C-19.

NOTES TO THE CONTRACTOR

1. THE CONTRACTOR SHALL POTHOLE, FIELD VERIFY ALL UTILITY CROSSINGS, AND EXISTING WATER LINE AT CONNECTION POINT.
2. THE CONTRACTOR SHALL VERIFY SANITARY SEWER AND OTHER UTILITIES AT THE NEW WATER LINE CROSSING.
3. ROPE PIPE JOINTS TO MAINTAIN HORIZONTAL ALIGNMENT 2 1/2" MAX PER PIPE JOINT.

REV	DATE	REVISION	APPR'D	REV BY

DIAL 811
DIGALERT
UNDERGROUND SERVICE ALERT
PLAY IT SAFE. DIAL BEFORE YOU DIG!
AT LEAST TWO WORKING DAYS PRIOR TO EXCAVATING

REGISTERED PROFESSIONAL ENGINEER
CHRISTOPHER CHEM HAWES
Exp. 6/30/2014
No. 69578
CIVIL
STATE OF CALIFORNIA
6/18/14

PLANS PREPARED BY:
General Civil, Transportation, Municipal, Water and Wastewater Engineering, Planning, Construction Management, and Surveying
118 West Lime Avenue
Monrovia, Ca. 91016
Phone: (626) 357-0588
Fax: (626) 303-7957
CIVILTEC engineering inc.
Monrovia • Prescott • Phoenix
ERM

GROUNDWATER EXTRACTION AND TREATMENT SYSTEM COMBINED REMEDY SOURCE AREA OPERABLE UNIT, ROCKETS, FIREWORKS, AND FLARES SUPERFUND SITE

SCALE	AS SHOWN	DESIGNED BY	JM/BS/BD/CD	DRAWN BY	JM/BS/CD	DRAWING NUMBER	
DATE	SCALE	CHECKED	BD/CSH	APPROVED		JOB NUMBER	2013175.00

MIRO WAY
WATER MAIN PLAN AND PROFILE
STA. 10+00 TO STA. 19+00

ENVIRONMENTAL RESOURCES MANAGEMENT

REV
SHEET 10
DISCIPLINE NO. C-5

X:\2013\2013175.00-EDM-RIALTO TREATMENT PLANT EXPANSION\DWG\TREATMENT PLANT\2013175.00 RIALTO-SHT10 C-5 MIRO WATER LINE PLAN.DWG (

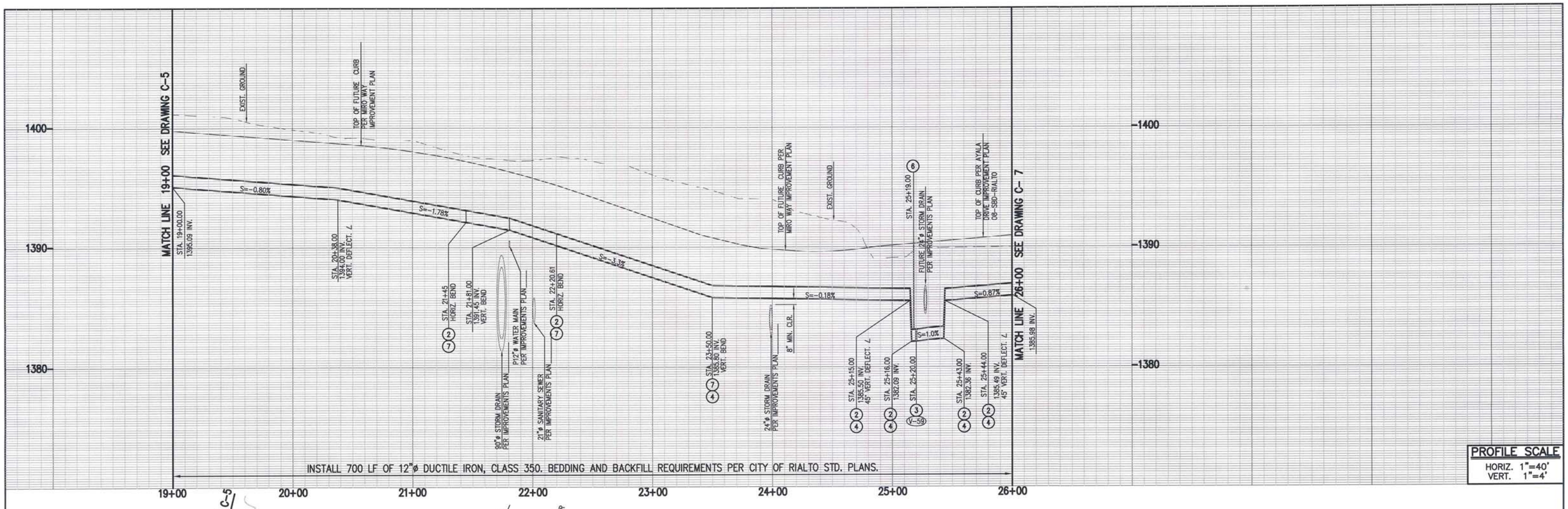

PROFILE SCALE
HORIZ. 1"=40'
VERT. 1"=4'

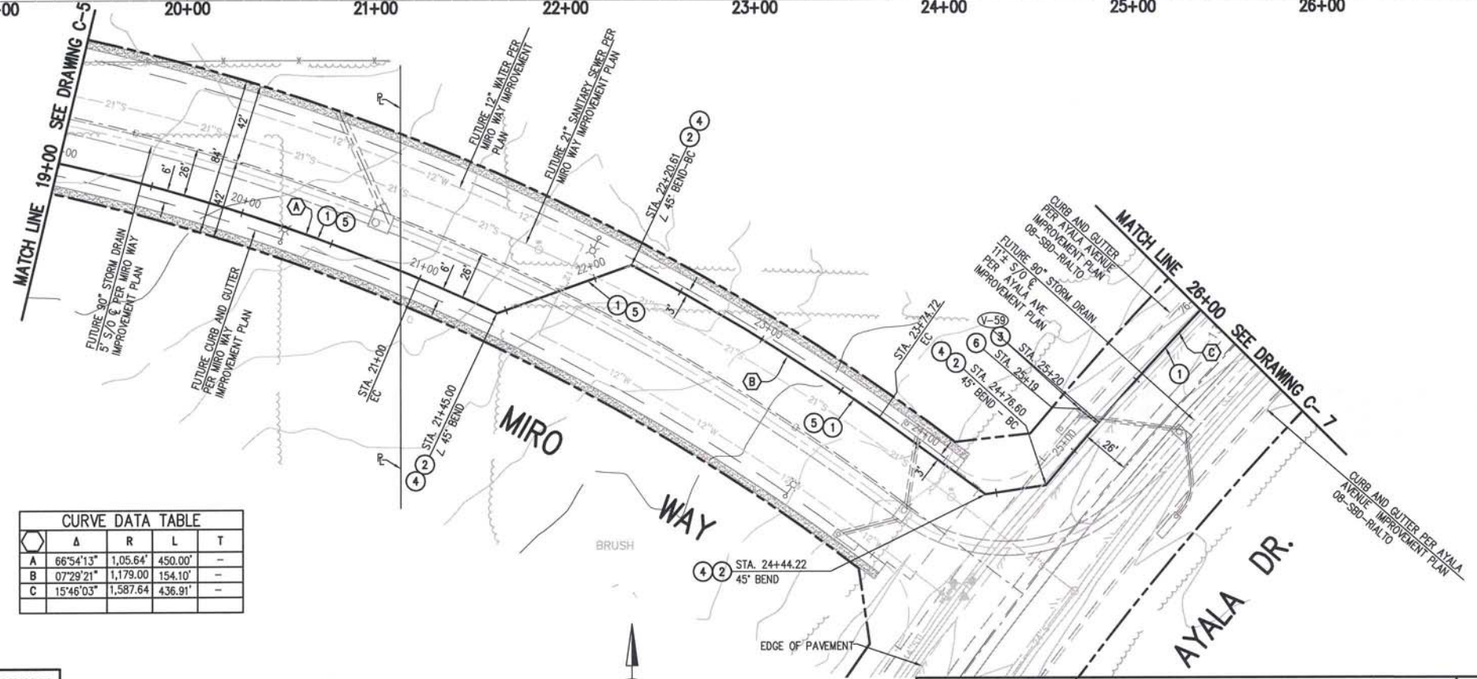

CURVE DATA TABLE				
	Δ	R	L	T
A	66°54'13"	1,05.64'	450.00'	–
B	07°29'21"	1,179.00	154.10'	–
C	15°46'03"	1,587.64	436.91'	–

WATER LINE CONSTRUCTION NOTES (THIS SHEET)

1. INSTALL 12"ø DUCTILE IRON PIPE, CLASS 350.
2. INSTALL 12"-45° BEND, MJxMJ.
3. INSTALL 12" RESILIENT GATE VALVE, MJxMJ., WITH VALVE BOX RISER PER CITY OF RIALTO ST. NO. RW-718-0. SEE DETAIL 2 ON DWG. C-19.
4. INSTALL CONCRETE THRUST BLOCK PER CITY OF RIALTO ST. NO. RW-722-0. SEE DETAIL 1 ON DWG. C-19.
5. PROVIDE TRENCHING PER CITY OF RIALTO STD NO. RS-147-0, SEE DETAIL 3 ON DWG. C-19.
6. INSTALL 6" BLOW-OFF PER CITY OF RIALTO STD. NO. 707-0, SEE DETAIL 5 ON DWG. C-19.
7. INSTALL 12"-22.5° BEND, MJxMJ.

NOTES TO THE CONTRACTOR

1. THE CONTRACTOR SHALL POTHOLE, FIELD VERIFY ALL UTILITY CROSSINGS, AND EXISTING WATER LINE AT CONNECTION POINT.
2. THE CONTRACTOR SHALL VERIFY SANITARY SEWER AND OTHER UTILITIES AT THE NEW WATER LINE CROSSING.
3. ROPE PIPE JOINTS TO MAINTAIN HORIZONTAL ALIGNMENT 2 1/2° MAX MAX PER PIPE JOINT.
4. CONTRACTOR SHALL REPLACE ANY DAMAGED TRAFFIC LOOPS AND STRIPING IN KIND.

REV	DATE	REVISION	APPR'D	REV BY

DIAL 811
DIGALERT
UNDERGROUND SERVICE ALERT
PLAY IT SAFE. DIAL BEFORE YOU DIG!
AT LEAST TWO WORKING DAYS PRIOR TO EXCAVATING

REGISTERED PROFESSIONAL ENGINEER CHRISTOPHER SHEM HAWES Exp. 6/30/2014 No. 69578 CIVIL STATE OF CALIFORNIA
6/18/14

PLANS PREPARED BY:
General Civil, Transportation, Municipal, Water and Wastewater Engineering, Planning, Construction Management, and Surveying
118 West Lime Avenue
Monrovia, Ca. 91016
Phone: (626) 357-0588
Fax: (626) 303-7957
CIVILTEC engineering inc.
Monrovia • Prescott • Phoenix

ERM

GROUNDWATER EXTRACTION AND TREATMENT SYSTEM COMBINED REMEDY SOURCE AREA OPERABLE UNIT, ROCKETS, FIREWORKS, AND FLARES SUPERFUND SITE

SCALE	AS SHOWN	DESIGNED BY	JM/BS/BD/CD	DRAWN BY	JM/BS/CD	DRAWING NUMBER	
DATE	SCALE	CHECKED	BD/CSH	APPROVED		JOB NUMBER	2013175.00

REV

SHEET 11

DISCIPLINE NO. C-6

MIRO WAY
WATER MAIN PLAN AND PROFILE
STA. 19+00 TO STA. 26+00

ENVIRONMENTAL RESOURCES MANAGEMENT

X:\2013\2013175.00-ERM-RIALTO TREATMENT PLANT EXPANSION\DWG\TREATMENT PLANT\2013175.00 RIALTO-SHT11 C-6 MIRO WATER LINE PLN.DWG (

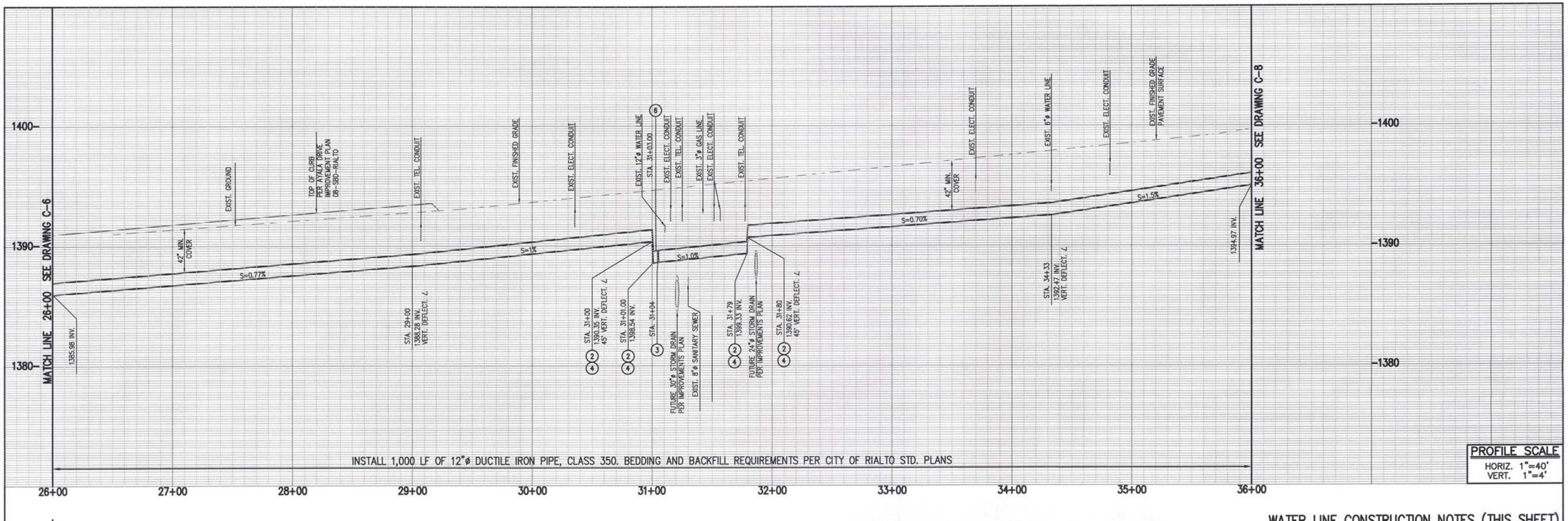

PROFILE SCALE
HORIZ. 1"=40'
VERT. 1"=4'

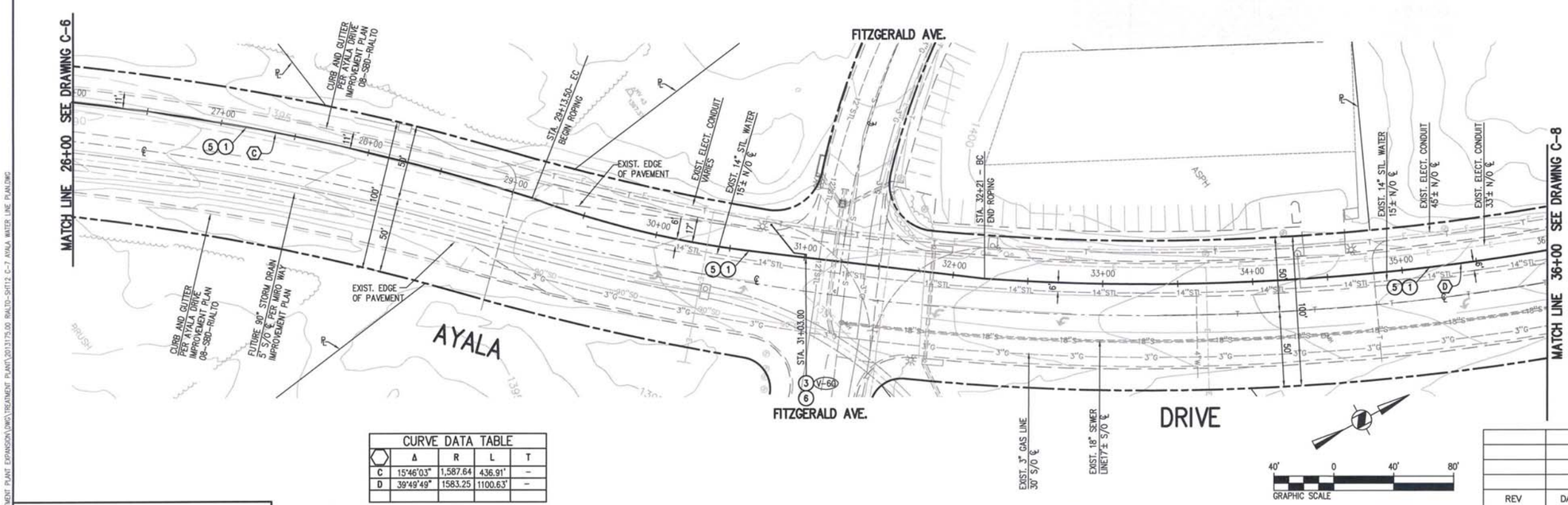

WATER LINE CONSTRUCTION NOTES (THIS SHEET)

1. INSTALL 12"ø DUCTILE IRON PIPE, CLASS 350.
2. INSTALL 12"–45° DUCTILE IRON BEND, MJxMJ.
3. INSTALL 12" RESILIENT GATE VALVE, MJxMJ., WITH VALVE BOX RISER PER CITY OF RIALTO STD. NO. RW-718-0. SEE DETAIL 2 ON DWG. C-19.
4. INSTALL CONCRETE THRUST BLOCK PER CITY OF RIALTO STD. NO. RW-722-0. SEE DETAIL 1 ON DWG. C-19.
5. PROVIDE TRENCHING PER CITY OF RIALTO STD. NO. RS-147-0, SEE DETAIL 3 ON DWG. C-19.
6. INSTALL 6" BLOW-OFF PER CITY OF RIALTO STD. NO. 707-0, SEE DETAIL 5 ON DWG. C-19.

NOTES TO THE CONTRACTOR

1. THE CONTRACTOR SHALL POTHOLE, FIELD VERIFY ALL UTILITY CROSSINGS, AND EXISTING WATER LINE AT CONNECTION POINT.
2. THE CONTRACTOR SHALL VERIFY SANITARY SEWER AND OTHER UTILITIES AT THE NEW WATER LINE CROSSING.
3. ROPE PIPE JOINTS TO MAINTAIN HORIZONTAL ALIGNMENT 2 1/2° MAX PER PIPE JOINT.
4. CONTRACTOR SHALL REPLACE ANY DAMAGED TRAFFIC LOOPS AND STRIPING IN KIND.

CURVE DATA TABLE

	Δ	R	L	T
C	15°46'03"	1,587.64	436.91'	–
D	39°49'49"	1583.25	1100.63'	–

REV	DATE	REVISION	APPR'D	REV BY

DIAL 811
DIGALERT
UNDERGROUND SERVICE ALERT
PLAY IT SAFE. DIAL BEFORE YOU DIG!
AT LEAST TWO WORKING DAYS PRIOR TO EXCAVATING

REGISTERED PROFESSIONAL ENGINEER CHRISTOPHER SHEM HAWES Exp. 6/30/2014 No. 69578 CIVIL STATE OF CALIFORNIA
12/18/14

PLANS PREPARED BY:
General Civil, Transportation, Municipal, Water and Wastewater Engineering, Planning, Construction Management, and Surveying
118 West Lime Avenue
Monrovia, Ca. 91016
Phone: (626) 357-0588
Fax: (626) 303-7957
CIVILTEC engineering inc.
Monrovia • Prescott • Phoenix

ERM

GROUNDWATER EXTRACTION AND TREATMENT SYSTEM COMBINED REMEDY SOURCE AREA OPERABLE UNIT, ROCKETS, FIREWORKS, AND FLARES SUPERFUND SITE

SCALE	AS SHOWN	DESIGNED BY	JM/BS/BQ/CD	DRAWN BY	JM/BS/CD	DRAWING NUMBER	
DATE	SCALE	CHECKED	BQ/CSH	APPROVED		JOB NUMBER	2013175.00

REV
SHEET 12

AYALA DRIVE
WATER MAIN PLAN AND PROFILE
STA. 26+00 TO STA. 36+00

DISCIPLINE NO. C-7

ENVIRONMENTAL RESOURCES MANAGEMENT

J:\2013\2013175.00-ERM-RIALTO TREATMENT PLANT EXPANSION\DWG\TREATMENT PLANT\2013175.00 RIALTO-SHT12 C-7 AYALA WATER LINE PLAN.DWG

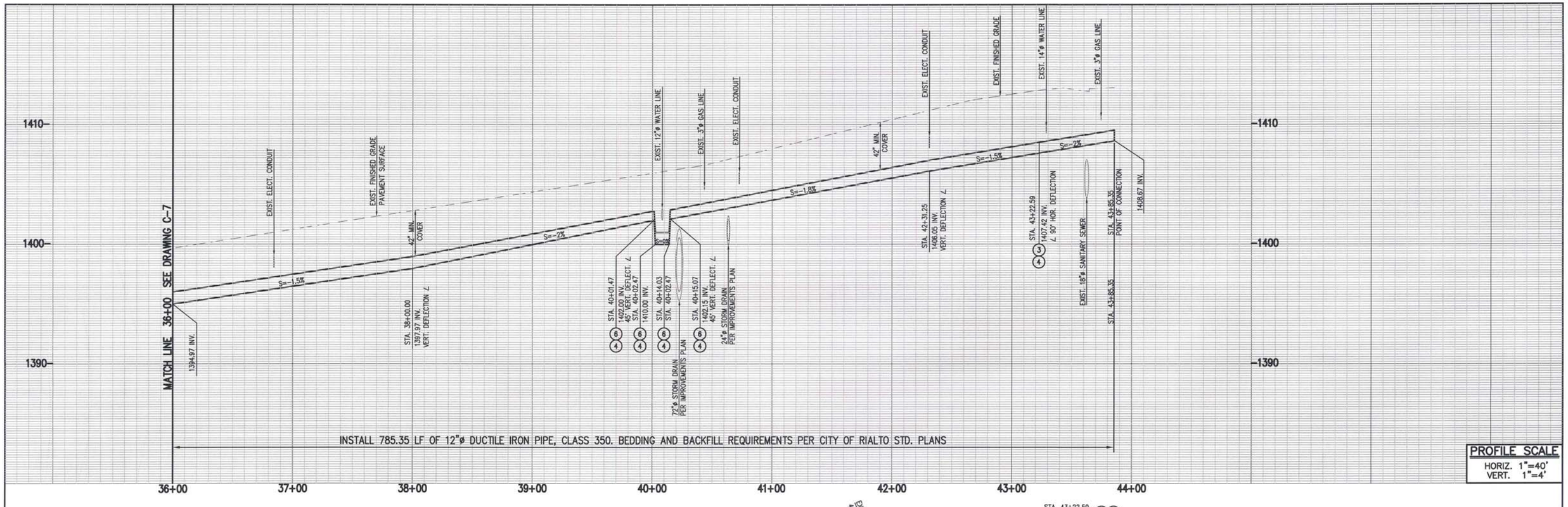

PROFILE SCALE
HORIZ. 1"=40'
VERT. 1"=4'

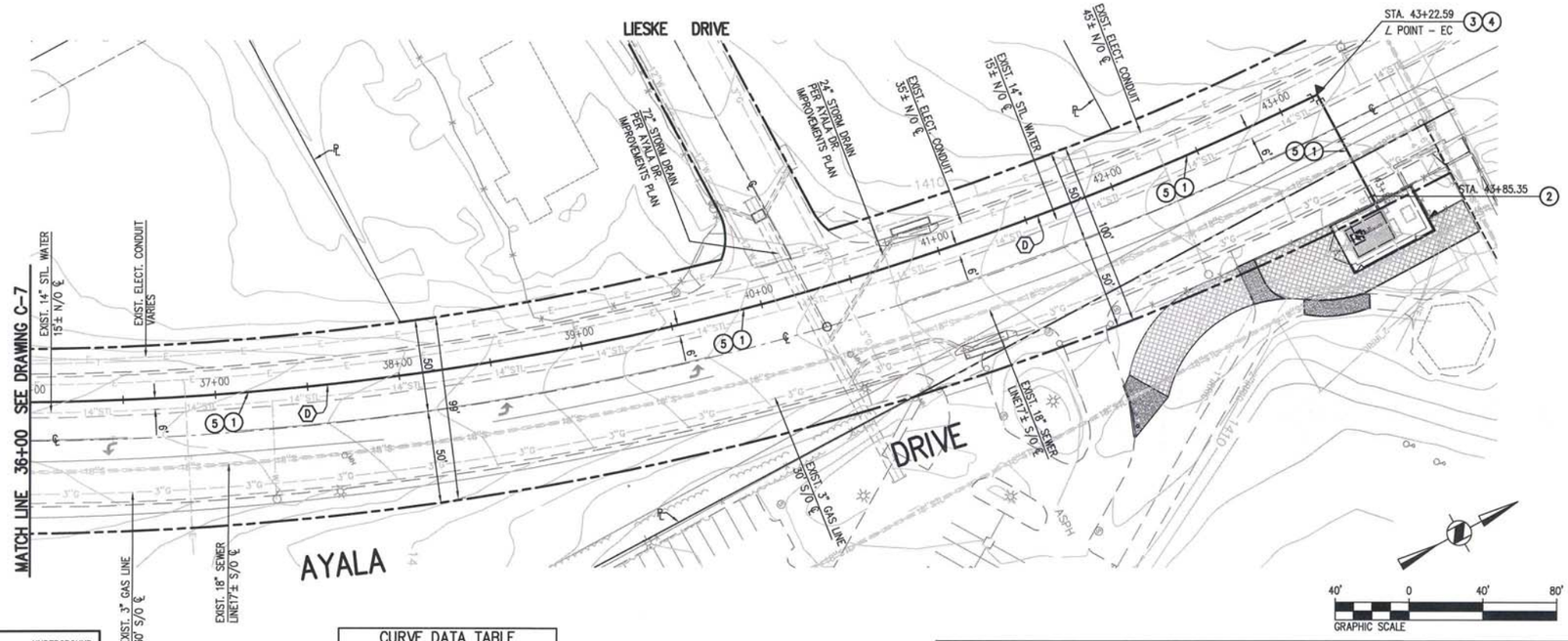

WATER LINE CONSTRUCTION NOTES (THIS SHEET)

1. INSTALL 12"ø DUCTILE IRON PIPE, CLASS 350.
2. JOIN, REFER TO DRAWING C-3 WELL SITE FOR POINT OF CONNECTION.
3. INSTALL 12"-90° DUCTILE IRON BEND, MJxMJ.
4. INSTALL CONCRETE THRUST BLOCK PER CITY OF RIALTO STD. NO. RW-722-0. SEE DETAIL 1 ON DWG. C-19.
5. PROVIDE TRENCHING PER CITY OF RIALTO STD. NO. RS-147-0, SEE DETAIL 3 ON DWG. C-19.
6. INSTALL 12"-45° DUCTILE IRON BEND, MJxMJ.

NOTES TO THE CONTRACTOR

1. THE CONTRACTOR SHALL POTHOLE, FIELD VERIFY ALL UTILITY CROSSINGS, AND EXISTING WATER LINE AT CONNECTION POINT.
2. THE CONTRACTOR SHALL VERIFY SANITARY SEWER AND OTHER UTILITIES AT THE NEW WATER LINE CROSSING.
3. ROPE PIPE JOINTS TO MAINTAIN HORIZONTAL ALIGNMENT 2 1/2° MAX PER PIPE JOINT.
4. CONTRACTOR SHALL REPLACE ANY DAMAGED TRAFFIC LOOPS AND STRIPING IN KIND.

CURVE DATA TABLE				
	Δ	R	L	T
D	39°49'49"	1583.25	1100.63'	–

DIAL 811
DIGALERT
UNDERGROUND SERVICE ALERT
PLAY IT SAFE. DIAL BEFORE YOU DIG!
AT LEAST TWO WORKING DAYS PRIOR TO EXCAVATING

REGISTERED PROFESSIONAL ENGINEER
CHRISTOPHER SHEM HAWES
Exp. 6/30/2014
No. 69578
CIVIL
STATE OF CALIFORNIA
6/10/14

PLANS PREPARED BY:
General Civil, Transportation, Municipal, Water and Wastewater Engineering, Planning, Construction Management, and Surveying
118 West Lime Avenue
Monrovia, Ca. 91016
Phone: (626) 357-0588
Fax: (626) 303-7957
CIVILTEC engineering inc.
Monrovia • Prescott • Phoenix
ERM

REV	DATE	REVISION	APPR'D	REV BY

GROUNDWATER EXTRACTION AND TREATMENT SYSTEM COMBINED REMEDY SOURCE AREA OPERABLE UNIT, ROCKETS, FIREWORKS, AND FLARES SUPERFUND SITE

SCALE	AS SHOWN	DESIGNED BY	JM/BS/BD/CD	DRAWN BY	JM/BS/CD	DRAWING NUMBER	
DATE	SCALE	CHECKED	BD/CSH	APPROVED		JOB NUMBER	2013175.00

REV

SHEET 13

AYALA DRIVE
WATER MAIN PLAN AND PROFILE
STA. 36+00 TO STA. 43+85

DISCIPLINE NO. C-8

ENVIRONMENTAL RESOURCES MANAGEMENT

X:\2013\2013175.00-ERM-RIALTO TREATMENT PLANT EXPANSION\DWG\TREATMENT PLANT\2013175.00 RIALTO-SHT13 C-8 AYALA WATER LINE PLAN.DWG

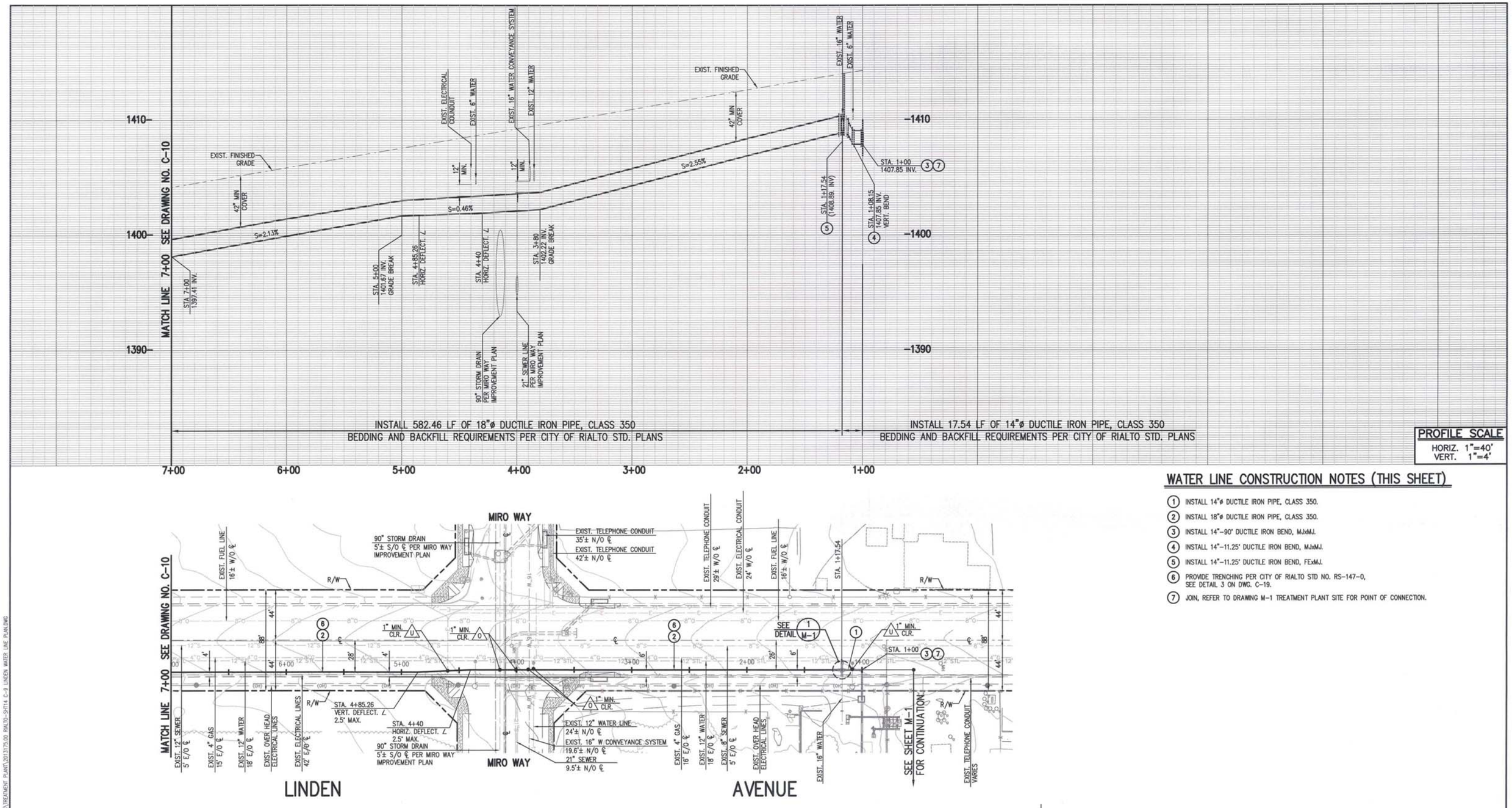

PROFILE SCALE
HORIZ. 1"=40'
VERT. 1"=4'

WATER LINE CONSTRUCTION NOTES (THIS SHEET)

1. INSTALL 14"ø DUCTILE IRON PIPE, CLASS 350.
2. INSTALL 18"ø DUCTILE IRON PIPE, CLASS 350.
3. INSTALL 14"-90° DUCTILE IRON BEND, MJxMJ.
4. INSTALL 14"-11.25° DUCTILE IRON BEND, MJxMJ.
5. INSTALL 14"-11.25° DUCTILE IRON BEND, FExMJ.
6. PROVIDE TRENCHING PER CITY OF RIALTO STD NO. RS-147-0, SEE DETAIL 3 ON DWG. C-19.
7. JOIN, REFER TO DRAWING M-1 TREATMENT PLANT SITE FOR POINT OF CONNECTION.

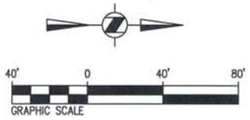

REV	DATE	REVISION	APPR'D	REV BY

DIAL 811
DIGALERT
UNDERGROUND SERVICE ALERT
PLAY IT SAFE. DIAL BEFORE YOU DIG!
AT LEAST TWO WORKING DAYS PRIOR TO EXCAVATING

NOTES TO THE CONTRACTOR

1. THE CONTRACTOR SHALL POTHOLE, FIELD VERIFY ALL UTILITY CROSSINGS, AND EXISTING WATER LINE AT CONNECTION POINT.
2. THE CONTRACTOR SHALL VERIFY SANITARY SEWER AND OTHER UTILITIES AT THE NEW WATER LINE CROSSING.
3. ROPE PIPE JOINTS TO MAINTAIN HORIZONTAL ALIGNMENT 2 1/2° MAX PER PIPE JOINT.
4. ALL PIPE FITTINGS, JOINTS SHALL BE RESTRAINED, EBAA, SERIES 1100.

REG. STEVENS PROFESSIONAL ENGINEER CHRISTOPHER CHEM HAWES Exp. 6/30/2014 No. 69578 CIVIL STATE OF CALIFORNIA
6/18/14

PLANS PREPARED BY:
General Civil, Transportation, Municipal, Water and Wastewater Engineering, Planning, Construction Management, and Surveying
118 West Lime Avenue
Monrovia, Ca. 91016
Phone: (626) 357-0588
Fax: (626) 303-7957
CIVILTEC engineering inc.
Monrovia • Prescott • Phoenix
ERM

GROUNDWATER EXTRACTION AND TREATMENT SYSTEM COMBINED REMEDY SOURCE AREA OPERABLE UNIT, ROCKETS, FIREWORKS, AND FLARES SUPERFUND SITE

SCALE	AS SHOWN	DESIGNED BY	JM/BS/BD/CD	DRAWNBY	JM/BS/CD	DRAWING NUMBER	
DATE	SCALE	CHECKED	BD/CSH	APPROVED		JOB NUMBER	2013175.00

REV

SHEET 14

LINDEN AVENUE
WATER MAIN PLAN AND PROFILE
STA. 1+00 TO STA. 7+00

DISCIPLINE NO. C-9

ENVIRONMENTAL RESOURCES MANAGEMENT

X:\2013\2013175.00-ERM-RIALTO TREATMENT PLANT EXPANSION\DWG\TREATMENT PLANT\2013175.00 RIALTO-SHT14 C-9 LINDEN WATER LINE PLAN.DWG

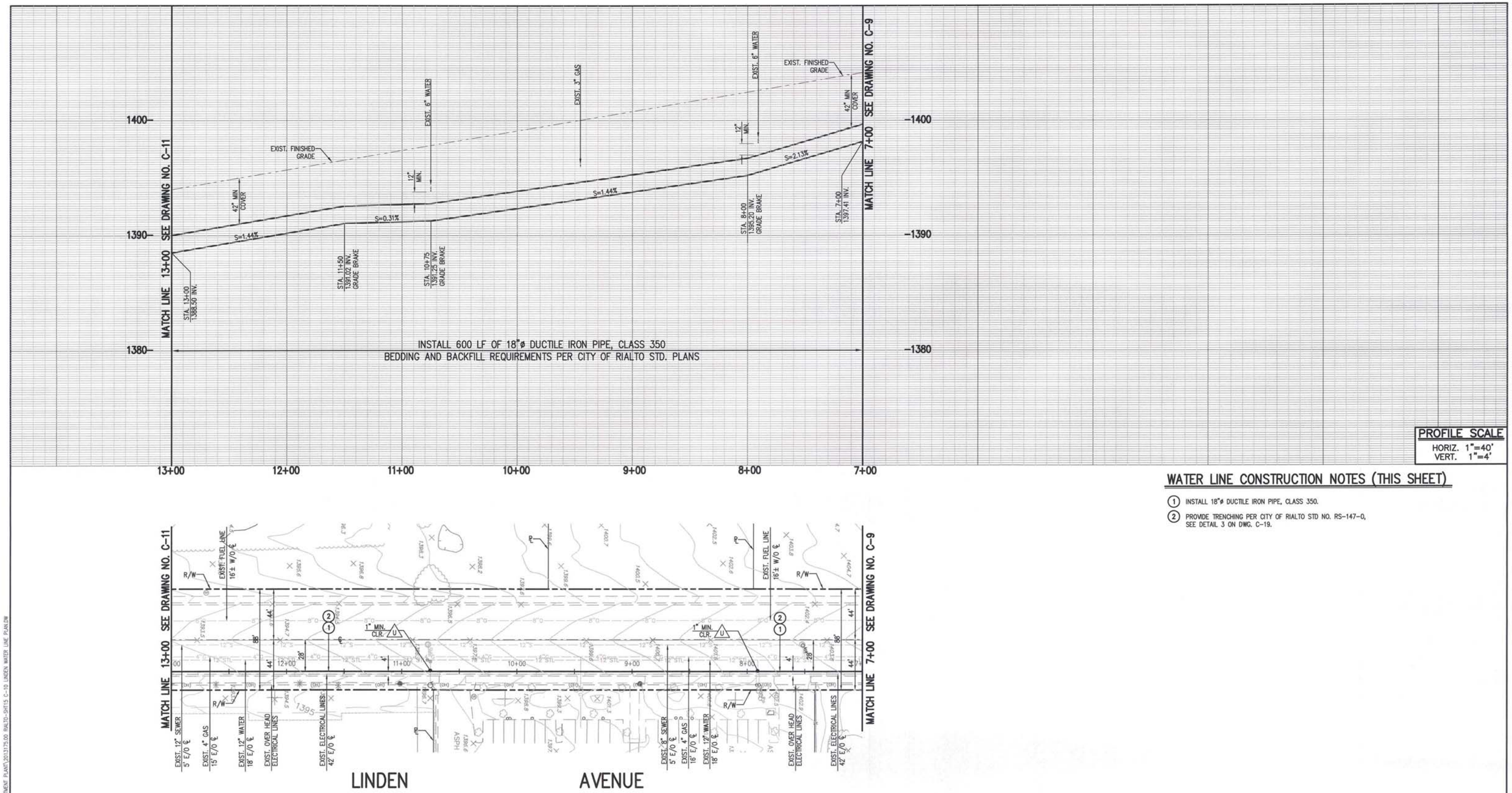

PROFILE SCALE
HORIZ. 1"=40'
VERT. 1"=4'

WATER LINE CONSTRUCTION NOTES (THIS SHEET)

1. INSTALL 18"ø DUCTILE IRON PIPE, CLASS 350.
2. PROVIDE TRENCHING PER CITY OF RIALTO STD NO. RS-147-0, SEE DETAIL 3 ON DWG. C-19.

40' 0 40' 80'
GRAPHIC SCALE

REV	DATE	REVISION	APPR'D	REV BY

DIAL 811
DIGALERT
UNDERGROUND SERVICE ALERT
PLAY IT SAFE. DIAL BEFORE YOU DIG!
AT LEAST TWO WORKING DAYS PRIOR TO EXCAVATING

NOTES TO THE CONTRACTOR

1. THE CONTRACTOR SHALL POTHOLE, FIELD VERIFY ALL UTILITY CROSSINGS, AND EXISTING WATER LINE AT CONNECTION POINT.
2. THE CONTRACTOR SHALL VERIFY SANITARY SEWER AND OTHER UTILITIES AT THE NEW WATER LINE CROSSING.
3. ROPE PIPE JOINTS TO MAINTAIN HORIZONTAL ALIGNMENT 2 1/2" MAX PER PIPE JOINT.
4. ALL PIPE FITTINGS, JOINTS SHALL BE RESTRAINED, EBAA, SERIES 1100.

REGISTERED PROFESSIONAL ENGINEER CHRISTOPHER BREM HAWES Exp. 6/30/2014 No. 69578 CIVIL STATE OF CALIFORNIA
4/18/14

PLANS PREPARED BY:
General Civil, Transportation, Municipal, Water and Wastewater Engineering, Planning, Construction Management, and Surveying
118 West Lime Avenue
Monrovia, Ca. 91016
Phone: (626) 357-0588
Fax: (626) 303-7957
CIVILTEC engineering inc.
Monrovia • Prescott • Phoenix
ERM

GROUNDWATER EXTRACTION AND TREATMENT SYSTEM COMBINED REMEDY SOURCE AREA OPERABLE UNIT, ROCKETS, FIREWORKS, AND FLARES SUPERFUND SITE

SCALE	AS SHOWN	DESIGNED BY	JM/BS/BD/CD	DRAWN BY	JM/BS/CD	DRAWING NUMBER	
DATE	SCALE	CHECKED	BD/CSH	APPROVED		JOB NUMBER	2013175.00

LINDEN AVENUE
WATER MAIN PLAN AND PROFILE
STA. 7+00 TO STA. 13+00

ENVIRONMENTAL RESOURCES MANAGEMENT

REV
SHEET 15
DISCIPLINE NO. C-10

X:\2013\2013175.00-ERM-RIALTO TREATMENT PLANT EXPANSION\DWG\TREATMENT PLANT\2013175.00 RIALTO-SHT15 C-10 LINDEN WATER LINE PLAN.DW

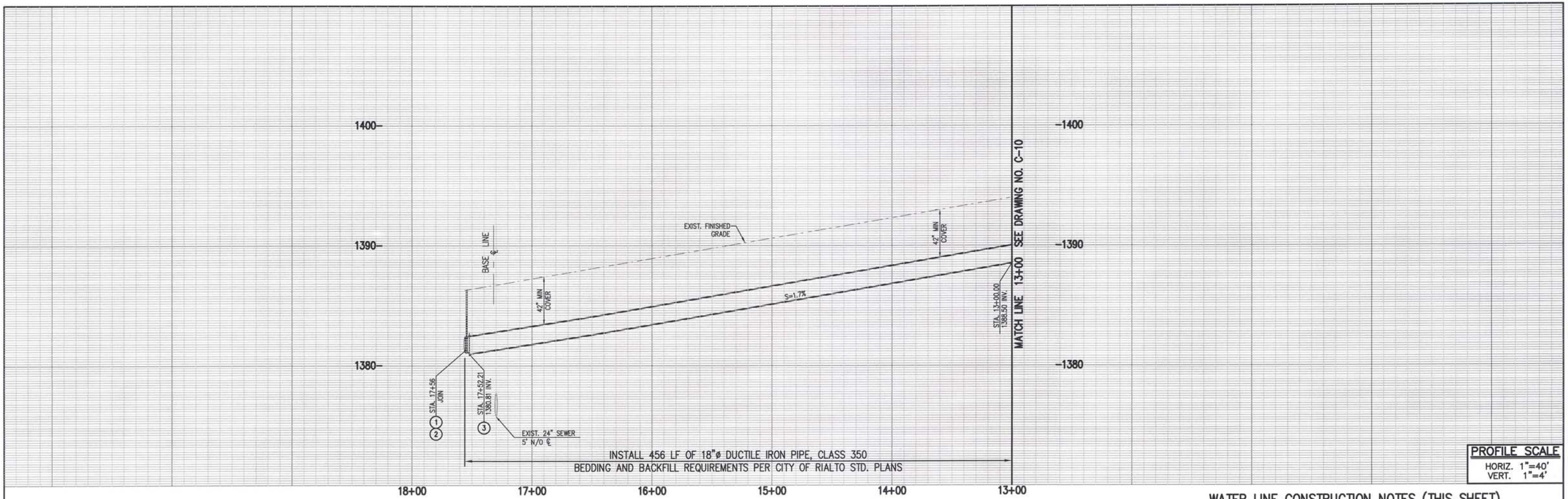

PROFILE SCALE
HORIZ. 1"=40'
VERT. 1"=4'

WATER LINE CONSTRUCTION NOTES (THIS SHEET)

1. INSTALL 12"ø STEEL TAPPING SLEEVE, ROMAC FTS420, OR EQUAL.
2. INSTALL 12" TAPPING GATE VALVE, FExFE., WITH VALVE BOX RISER PER CITY OF RIALTO ST. NO. RW-718-0. SEE DETAIL 2 ON DWG. C-19.
3. INSTALL 18"x12" DUCTILE IRON REDUCER, MJxFE.
4. INSTALL 18"ø DUCTILE IRON PIPE, CLASS 350.
5. PROVIDE TRENCHING PER CITY OF RIALTO STD NO. RS-147-0, SEE DETAIL 3 ON DWG. C-19.

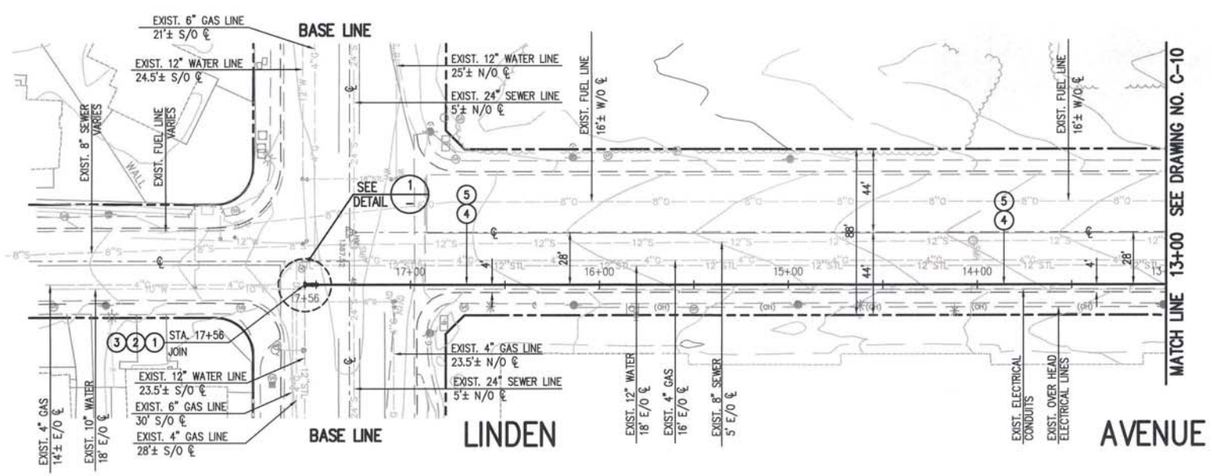

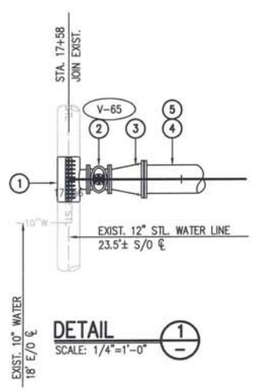

DETAIL 1
SCALE: 1/4"=1'-0"

NOTES TO THE CONTRACTOR

1. THE CONTRACTOR SHALL POTHOLE, FIELD VERIFY ALL UTILITY CROSSINGS, AND EXISTING WATER LINE AT CONNECTION POINT.
2. THE CONTRACTOR SHALL VERIFY SANITARY SEWER AND OTHER UTILITIES AT THE NEW WATER LINE CROSSING.
3. ROPE PIPE JOINTS TO MAINTAIN HORIZONTAL ALIGNMENT 2 1/2° MAX PER PIPE JOINT.
4. ALL PIPE FITTINGS, JOINTS SHALL BE RESTRAINED, EBAA, SERIES 1100.
5. CONTRACTOR SHALL REPLACE ANY DAMAGED STRIPING IN KIND.

40' 0 40' 80'
GRAPHIC SCALE

REV	DATE	REVISION	APPR'D	REV BY

DIAL 811
DIGALERT
UNDERGROUND SERVICE ALERT
PLAY IT SAFE. DIAL BEFORE YOU DIG!
AT LEAST TWO WORKING DAYS PRIOR TO EXCAVATING

REGISTERED PROFESSIONAL ENGINEER CHRISTOPHER BRIAN HAWES Exp. 6/30/2014 No. 69578 CIVIL STATE OF CALIFORNIA
6/18/14

PLANS PREPARED BY:
General Civil, Transportation, Municipal, Water and Wastewater Engineering, Planning, Construction Management, and Surveying
118 West Lime Avenue
Monrovia, Ca. 91016
Phone: (626) 357-0588
Fax: (626) 303-7957
CIVILTEC engineering inc.
Monrovia • Prescott • Phoenix
ERM

GROUNDWATER EXTRACTION AND TREATMENT SYSTEM COMBINED REMEDY SOURCE AREA OPERABLE UNIT, ROCKETS, FIREWORKS, AND FLARES SUPERFUND SITE

SCALE	AS SHOWN	DESIGNED BY	JM/BS/BD/CD	DRAWN BY	JM/BS/CD	DRAWING NUMBER	
DATE	SCALE	CHECKED	BD/CSH	APPROVED		JOB NUMBER	2013175.00

REV
SHEET 16

LINDEN AVENUE
WATER MAIN PLAN AND PROFILE
STA. 13+00 TO STA. 17+56

DISCIPLINE NO. C-11

ENVIRONMENTAL RESOURCES MANAGEMENT

X:\2013\2013175.00-FEMA-RIALTO TREATMENT PLANT EXPANSION\DWG\TREATMENT PLANT\2013175.00 RIALTO-SHT16 C-11 LINDEN WATER LINE PLAN.DW

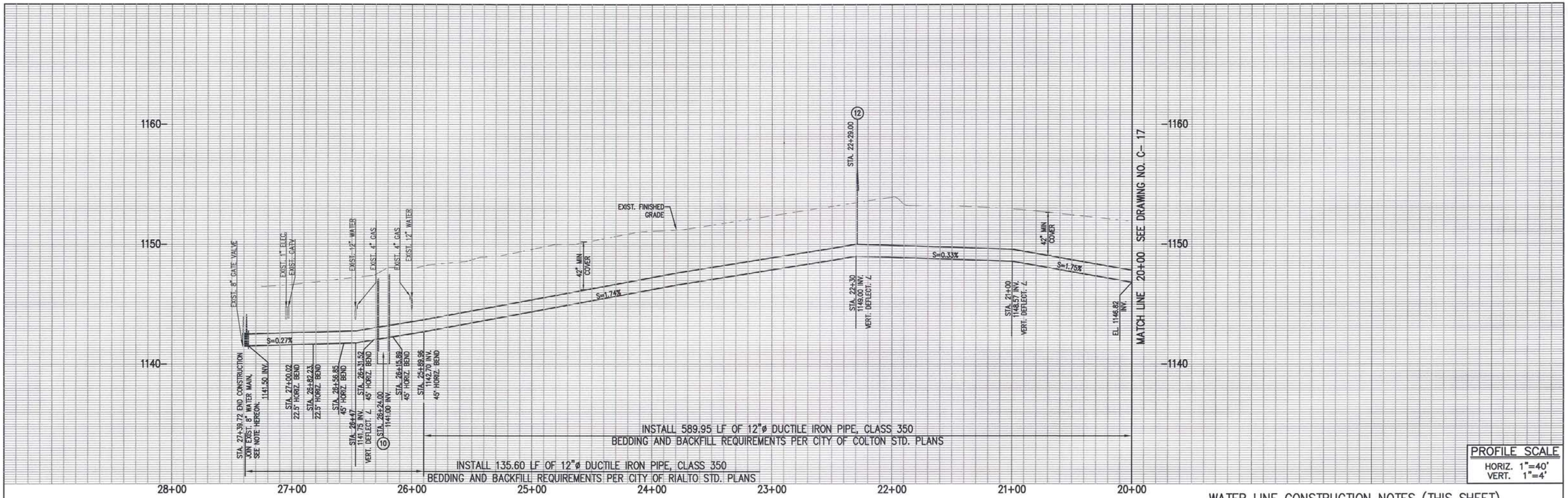

PROFILE SCALE
HORIZ. 1"=40'
VERT. 1"=4'

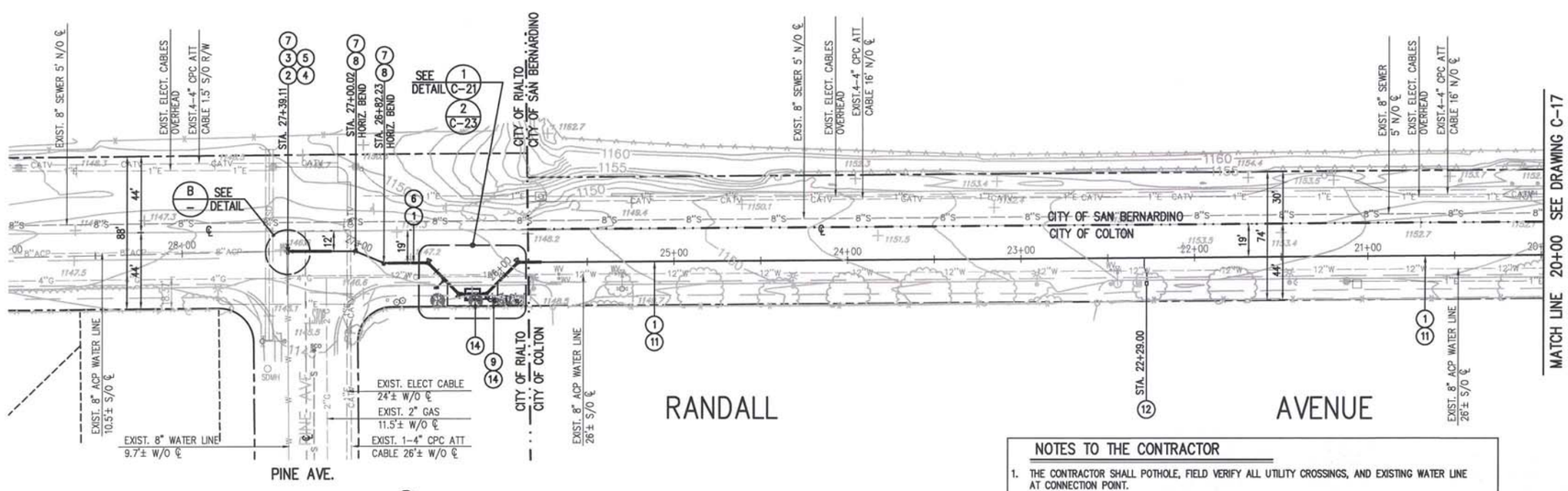

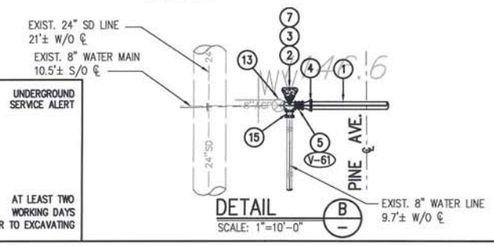

DETAIL B
SCALE: 1"=10'-0"

WATER LINE CONSTRUCTION NOTES (THIS SHEET)

1. INSTALL 12"ø DUCTILE IRON PIPE, CLASS 350.
2. REMOVE EXISTING 8" FITTING, THRUST BLOCK AS NECESSARY.
3. INSTALL 8"x8"x8" DUCTILE IRON TEE, FLGxFLGxFLG.
4. INSTALL 12"x8" DUCTILE IRON REDUCER, MJxFLG.
5. INSTALL 8" RESILIENT GATE VALVE, FLGxFLG., WITH VALVE BOX RISER PER CITY OF RIALTO ST. NO. RW-718-0. SEE DETAIL 2 ON DWG. C-19.
6. PROVIDE TRENCHING PER CITY OF RIALTO STD NO. RS-147-0, SEE DETAIL 3 ON DWG. C-19.
7. INSTALL CONCRETE THRUST BLOCK PER CITY OF RIALTO ST. NO. RW-722-0. SEE DETAIL 1 ON DWG. C-19.
8. INSTALL 12"-22.50° DUCTILE IRON BEND, MJxMJ.
9. INSTALL SAMPLE STATION PER CITY OF COLTON STD. DWG. 712, SEE DETAIL 4 ON DWG. C-22.
10. CONSTRUCT 7'-6"x7'-0"x6'-0" CONCRETE VAULT, SEE DETAIL 1 ON DWG. C-21.
11. PROVIDE TRENCHING PER CITY OF COLTON PUBLIC WORK DEPT., STD. DWG. NO. 124a SEE DETAIL 2 ON DWG. C-20.
12. INSTALL 1" AIR VACCUM ASSEMBLY PER CITY OF COLTON PUBLIC WORK DEPT., STD. DWG. NO. 707, SEE DETAIL 6 ON DWG. C-20.
13. PROTECT IN-PLACE EXISTING WATER VALVE.
14. REMOVE EXISTING TREE, BUSHES AND ROOTS AS NECESSARY.
15. INSTALL NECESSARY FITTINGS TO RECONNECT EXISTING WATER LINE WITH NEW 8" DUCTILE IRON TEE.

NOTES TO THE CONTRACTOR

1. THE CONTRACTOR SHALL POTHOLE, FIELD VERIFY ALL UTILITY CROSSINGS, AND EXISTING WATER LINE AT CONNECTION POINT.
2. THE CONTRACTOR SHALL VERIFY SANITARY SEWER AND OTHER UTILITIES AT THE NEW WATER LINE CROSSING.
3. ROPE PIPE JOINTS TO MAINTAIN HORIZONTAL ALIGNMENT 2 1/2° MAX PER PIPE JOINT.

DIAL 811
DIGALERT
UNDERGROUND SERVICE ALERT
PLAY IT SAFE. DIAL BEFORE YOU DIG!
AT LEAST TWO WORKING DAYS PRIOR TO EXCAVATING

GRAPHIC SCALE 40' 0 40' 80'

REGISTERED PROFESSIONAL ENGINEER CHRISTOPHER CHEM HAWES Exp. 6/30/2014 No. 69578 CIVIL STATE OF CALIFORNIA
6/18/14

PLANS PREPARED BY:
General Civil, Transportation, Municipal, Water and Wastewater Engineering, Planning, Construction Management, and Surveying
118 West Lime Avenue
Monrovia, Ca. 91016
Phone: (626) 357-0588
Fax: (626) 303-7957
CIVILTEC engineering inc.
Monrovia • Prescott • Phoenix

ERM

REV	DATE	REVISION	APPR'D	REV BY

GROUNDWATER EXTRACTION AND TREATMENT SYSTEM COMBINED REMEDY SOURCE AREA OPERABLE UNIT, ROCKETS, FIREWORKS, AND FLARES SUPERFUND SITE

REV

SCALE	AS SHOWN	DESIGNED BY	JM/BS/BD/CD	DRAWN BY	JM/BS/CD	DRAWING NUMBER	
DATE	SCALE	CHECKED	BD/CSH	APPROVED		JOB NUMBER	2013175.00

SHEET 21

RANDALL AVENUE
WATER MAIN PLAN AND PROFILE
STA. 20+00 TO STA. 27+25.55

DISCIPLINE NO. C-16

ENVIRONMENTAL RESOURCES MANAGEMENT

X:\2013\2013175.00-ERM-RIALTO TREATMENT PLANT EXPANSION\DWG\TREATMENT PLANT\2013175.00 RIALTO-SHT21 C-16 RANDELL WATER LINE PLAN.D

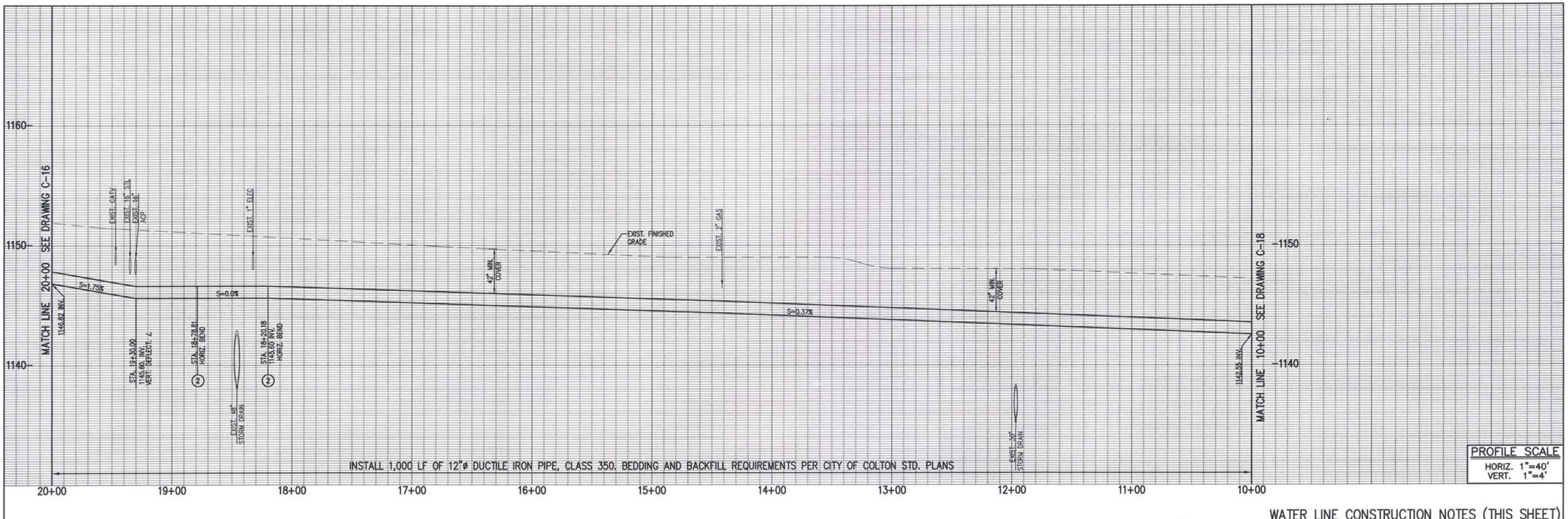

PROFILE SCALE
HORIZ. 1"=40'
VERT. 1"=4'

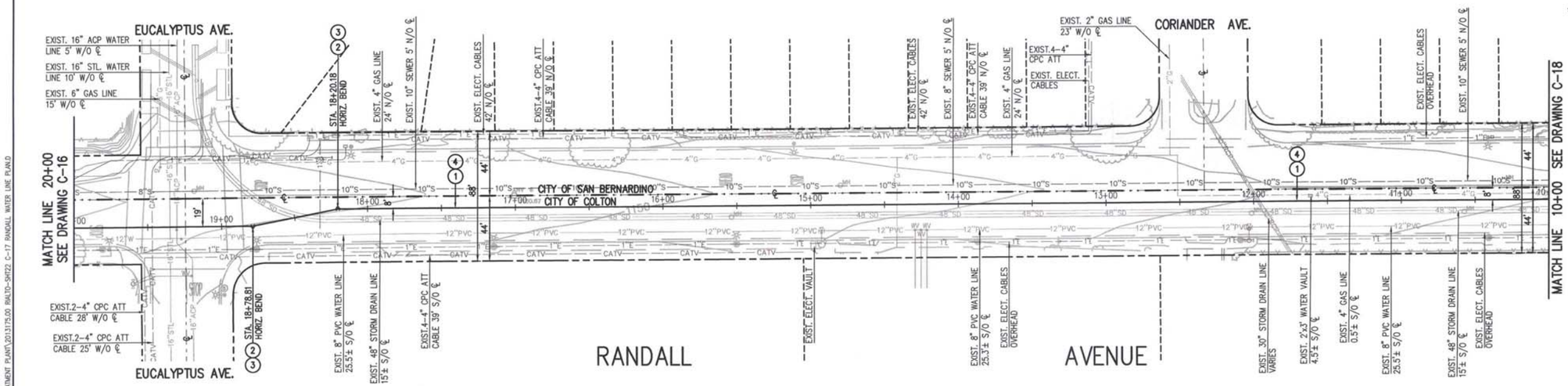

WATER LINE CONSTRUCTION NOTES (THIS SHEET)

1. INSTALL 12"ø DUCTILE IRON PIPE, CLASS 350.
2. INSTALL 12"-11.25° DUCTILE IRON BEND, MJxMJ.
3. INSTALL CONCRETE THRUST BLOCK PER CITY OF COLTON PUBLIC WORK DEPT., STD. DWG. NO. 703, SEE DETAIL 3 ON DWG. C-20.
4. PROVIDE TRENCHING PER CITY OF COLTON PUBLIC WORK DEPT., STD. DWG. NO. 124a SEE DETAIL 2 ON DWG. C-20.

NOTES TO THE CONTRACTOR

1. THE CONTRACTOR SHALL POTHOLE, FIELD VERIFY ALL UTILITY CROSSINGS, AND EXISTING WATER LINE AT CONNECTION POINT.
2. THE CONTRACTOR SHALL VERIFY SANITARY SEWER AND OTHER UTILITIES AT THE NEW WATER LINE CROSSING.
3. ROPE PIPE JOINTS TO MAINTAIN HORIZONTAL ALIGNMENT 2 1/2° MAX PER PIPE JOINT.
4. CONTRACTOR SHALL REPLACE ANY DAMAGED TRAFFIC LOOPS AND STRIPING IN KIND.

REV	DATE	REVISION	APPR'D	REV BY

DIAL 811
DIGALERT
UNDERGROUND SERVICE ALERT
PLAY IT SAFE. DIAL BEFORE YOU DIG!
AT LEAST TWO WORKING DAYS PRIOR TO EXCAVATING

GRAPHIC SCALE 40' 0 40' 80'

REGISTERED PROFESSIONAL ENGINEER CHRISTOPHER SHEM HAWES Exp. 6/30/2014 No. 69578 CIVIL STATE OF CALIFORNIA 6/18/14

PLANS PREPARED BY:
General Civil, Transportation, Municipal, Water and Wastewater Engineering, Planning, Construction Management, and Surveying
118 West Lime Avenue
Monrovia, Ca. 91016
Phone: (626) 357-0588
Fax: (626) 303-7957
CIVILTEC engineering inc.
Monrovia • Prescott • Phoenix
ERM

GROUNDWATER EXTRACTION AND TREATMENT SYSTEM COMBINED REMEDY SOURCE AREA OPERABLE UNIT, ROCKETS, FIREWORKS, AND FLARES SUPERFUND SITE

SCALE	AS SHOWN	DESIGNED BY	JM/BS/BD/CD	DRAWN BY	JM/BS/CD	DRAWING NUMBER	
DATE	SCALE	CHECKED	BD/CSH	APPROVED		JOB NUMBER	2013175.00

REV

SHEET 22

RANDALL AVENUE
WATER MAIN PLAN AND PROFILE
STA. 10+00 TO STA. 20+00

DISCIPLINE NO. C-17

ENVIRONMENTAL RESOURCES MANAGEMENT

X:\2013\2013175.00-ERM-RIALTO TREATMENT PLANT EXPANSION\DWG\TREATMENT PLANT\2013175.00 RIALTO-SHT22 C-17 RANDALL WATER LINE PLAN.D

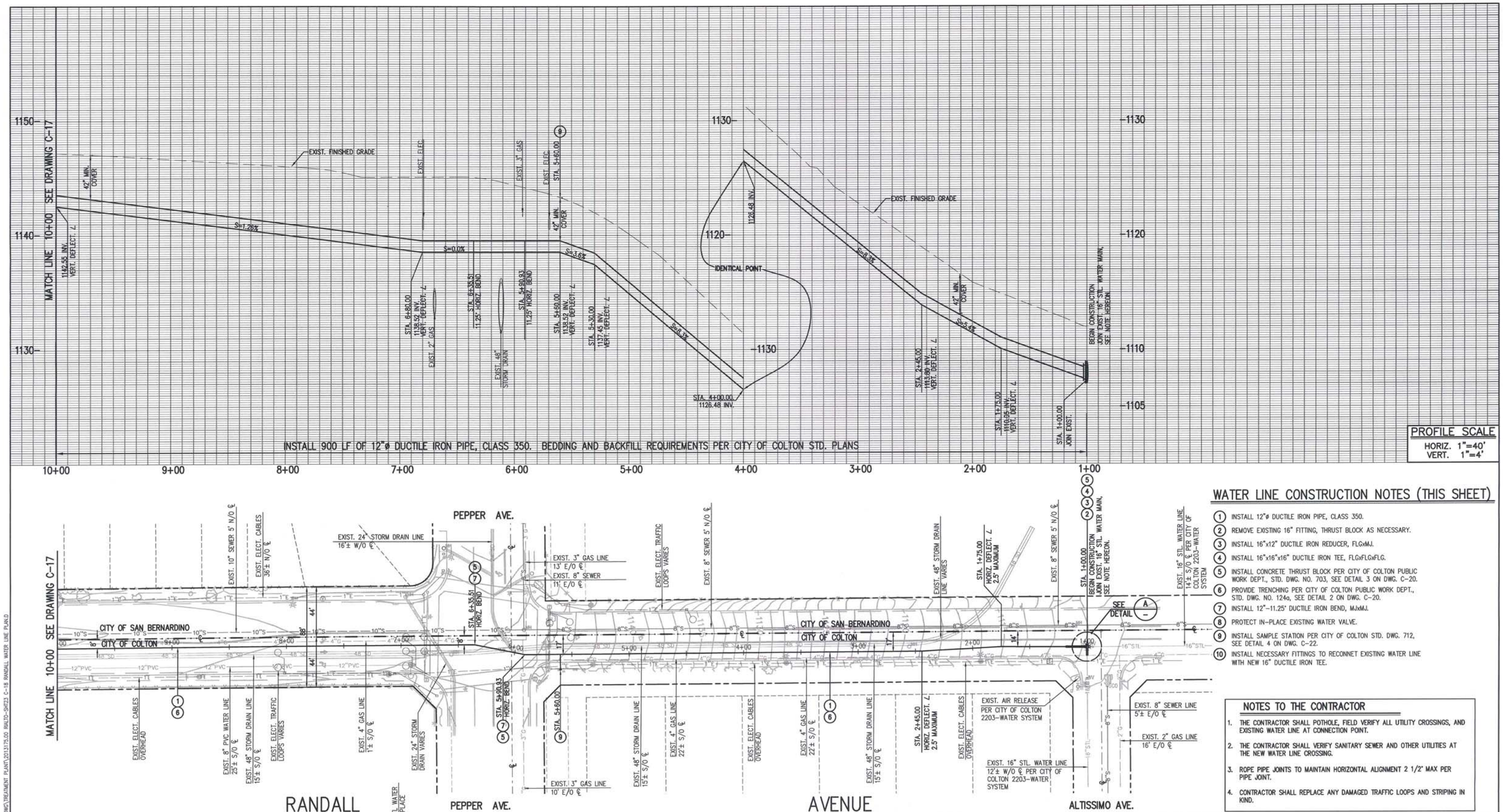

WATER LINE CONSTRUCTION NOTES (THIS SHEET)

1. INSTALL 12"ø DUCTILE IRON PIPE, CLASS 350.
2. REMOVE EXISTING 16" FITTING, THRUST BLOCK AS NECESSARY.
3. INSTALL 16"x12" DUCTILE IRON REDUCER, FLGxMJ.
4. INSTALL 16"x16"x16" DUCTILE IRON TEE, FLGxFLGxFLG.
5. INSTALL CONCRETE THRUST BLOCK PER CITY OF COLTON PUBLIC WORK DEPT., STD. DWG. NO. 703, SEE DETAIL 3 ON DWG. C-20.
6. PROVIDE TRENCHING PER CITY OF COLTON PUBLIC WORK DEPT., STD. DWG. NO. 124a, SEE DETAIL 2 ON DWG. C-20.
7. INSTALL 12"-11.25° DUCTILE IRON BEND, MJxMJ.
8. PROTECT IN-PLACE EXISTING WATER VALVE.
9. INSTALL SAMPLE STATION PER CITY OF COLTON STD. DWG. 712, SEE DETAIL 4 ON DWG. C-22.
10. INSTALL NECESSARY FITTINGS TO RECONNET EXISTING WATER LINE WITH NEW 16" DUCTILE IRON TEE.

NOTES TO THE CONTRACTOR

1. THE CONTRACTOR SHALL POTHOLE, FIELD VERIFY ALL UTILITY CROSSINGS, AND EXISTING WATER LINE AT CONNECTION POINT.
2. THE CONTRACTOR SHALL VERIFY SANITARY SEWER AND OTHER UTILITIES AT THE NEW WATER LINE CROSSING.
3. ROPE PIPE JOINTS TO MAINTAIN HORIZONTAL ALIGNMENT 2 1/2° MAX PER PIPE JOINT.
4. CONTRACTOR SHALL REPLACE ANY DAMAGED TRAFFIC LOOPS AND STRIPING IN KIND.

REV	DATE	REVISION	APPR'D	REV BY

DIAL 811 DIGALERT — UNDERGROUND SERVICE ALERT
PLAY IT SAFE. DIAL BEFORE YOU DIG! — AT LEAST TWO WORKING DAYS PRIOR TO EXCAVATING

REGISTERED PROFESSIONAL ENGINEER — CHRISTOPHER SHEM HAWES — Exp. 6/30/2014 — No. 69678 — CIVIL — STATE OF CALIFORNIA — 6/18/14

PLANS PREPARED BY:
General Civil, Transportation, Municipal, Water and Wastewater Engineering, Planning, Construction Management, and Surveying
118 West Lime Avenue
Monrovia, Ca. 91016
Phone: (626) 357-0588
Fax: (626) 303-7957
CIVILTEC engineering inc.
Monrovia • Prescott • Phoenix
ERM

GROUNDWATER EXTRACTION AND TREATMENT SYSTEM COMBINED REMEDY SOURCE AREA OPERABLE UNIT, ROCKETS, FIREWORKS, AND FLARES SUPERFUND SITE

SCALE	AS SHOWN	DESIGNED BY	JM/BS/BD/CD	DRAWN BY	JM/BS/CD	DRAWING NUMBER	
DATE	SCALE	CHECKED	BD/CSH	APPROVED		JOB NUMBER	2013175.00

REV — SHEET 23 — DISCIPLINE NO. C-18

RANDALL AVENUE
WATER MAIN PLAN AND PROFILE
STA. 1+00 TO STA. 10+00

ENVIRONMENTAL RESOURCES MANAGEMENT

X:\2013\2013175.00-ERM-RIALTO TREATMENT PLANT EXPANSION\DWG\TREATMENT PLANT\2013175.00 RIALTO-SHT23 C-18 RANDALL WATER LINE PLAN.D

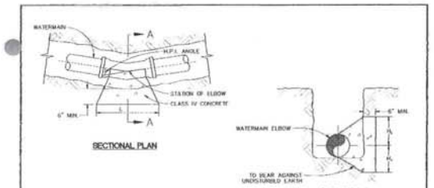

HORIZONTAL THRUST BLOCK				
PIPE DIA.	H_1	H_2	L	H.P.I. ANGLE
4"	1/2 O.D.	1/2 O.D.	4'-0"	5° TO 45°
4"	4"	4"	4'-0"	42° TO 83°
4"	10"	5"	4'-0"	84° TO 104°
6"	1/2 O.D.	1/2 O.D.	4'-0"	5° TO 27°
6"	8"	8"	4'-0"	28° TO 51°
6"	1'-8"	9"	4'-0"	52° TO 90°
8"	1/2 O.D.	1/2 O.D.	4'-0"	5° TO 20°
8"	8"	8"	4'-0"	21° TO 36°
8"	1'-8"	10"	4'-0"	37° TO 54°
8"	2'-4"	11'-1"	4'-0"	55° TO 78°
8"	2'-8"	11'-4"	4'-0"	79° TO 111°
10"	1/2 O.D.	1/2 O.D.	4'-0"	5° TO 16°
10"	10"	10"	4'-0"	17° TO 28°
10"	1'-10"	11"	4'-0"	29° TO 39°
10"	2'-4"	11'-2"	4'-0"	40° TO 53°
10"	3'-10"	11'-5"	4'-0"	54° TO 70°
10"	2'-10"	11'-5"	6'-0"	71° TO 120°
12"	1/2 O.D.	1/2 O.D.	4'-0"	5° TO 13°
12"	12"	12"	4'-0"	14° TO 22°
12"	2'-9"	12"	4'-0"	23° TO 30°
12"	3'-8"	1'-3"	4'-0"	31° TO 40°
12"	1'-0"	1'-8"	4'-0"	41° TO 54°
12"	3'-0"	1'-8"	6'-0"	55° TO 83°

NOT TO SCALE

APPROVED BY: P.W. DIRECTOR/CITY ENGINEER — DATE 12/2/14

REVISIONS: DATE | BY | MARK | APPROVED

CONCRETE THRUST BLOCKS FOR PIPELINES, CLASS 200 P.S.I. MAX

CITY OF RIALTO, CALIFORNIA
PUBLIC WORKS DEPARTMENT
ENGINEERING DIVISION

STANDARD NO. RW-722-0 | SHT 1 OF 4

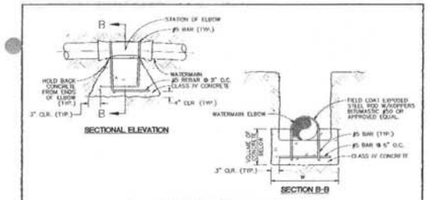

VERTICAL ANCHOR BLOCK			
PIPE DIA.	W	VOLUME OF CONC. (cu. ft.)	GRADE "S" DIFFERENCE
4"	1'-6"	4.3	5 TO 15
4"	1'-6"	6.5	16 TO 25
4"	1'-6"	8.8	26 TO 35
4"	1'-6"	10.8	36 TO 45
4"	1'-6"	13.0	46 TO 55
4"	1'-6"	15.1	56 TO 65
6"	2'-0"	7.6	5 TO 15
6"	2'-0"	11.4	11 TO 25
6"	2'-0"	15.2	26 TO 40
6"	2'-0"	22.8	41 TO 55
8"	2'-0"	10.3	5 TO 15
8"	2'-0"	15.5	11 TO 20
8"	2'-0"	20.6	21 TO 30
8"	2'-0"	31.0	31 TO 40
8"	2'-0"	41.3	41 TO 55
10"	2'-6"	20.9	5 TO 15
10"	2'-6"	27.8	16 TO 25
10"	2'-6"	41.7	26 TO 35
10"	2'-6"	55.6	36 TO 45
10"	2'-6"	69.5	46 TO 55
12"	2'-6"	27.8	5 TO 15
12"	2'-6"	36.8	16 TO 25
12"	2'-6"	55.3	26 TO 35
12"	2'-6"	73.7	36 TO 45
12"	2'-6"	92.1	46 TO 55

NOT TO SCALE

APPROVED BY: P.W. DIRECTOR/CITY ENGINEER — DATE 12/2/14

REVISIONS: DATE | BY | MARK | APPROVED

CONCRETE THRUST BLOCKS FOR PIPELINES, CLASS 200 P.S.I. MAX

CITY OF RIALTO, CALIFORNIA
PUBLIC WORKS DEPARTMENT
ENGINEERING DIVISION

STANDARD NO. RW-722-0 | SHT 2 OF 4

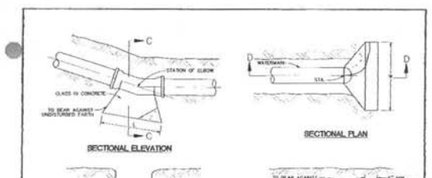

VERTICAL BEARER BLOCK			
PIPE DIA.	W	H_1	L
4"	1'-6"	8"	1'-0"
6"	2'-0"	9"	1'-0"
6"	2'-0"	9"	1'-6"
8"	2'-0"	10"	1'-0"
8"	2'-0"	10"	1'-6"
8"	2'-0"	10"	2'-0"
10"	2'-6"	10"	2'-0"
10"	2'-6"	1'-2"	1'-0"
10"	2'-6"	1'-2"	2'-0"
12"	2'-6"	1'-2"	2'-0"
12"	2'-6"	1'-3"	2'-0"
12"	2'-6"	1'-3"	3'-0"
12"	2'-6"	1'-3"	4'-0"

END THRUST BLOCK			
PIPE DIA.	H_1	H_2	L
4"	9"	8"	3'-6"
6"	1'-4"	9"	4'-0"
8"	1'-2"	1'-1"	4'-0"
10"	2'-10"	1'-5"	4'-0"
12"	3'-0"	1'-6"	5'-0"

NOT TO SCALE

APPROVED BY: P.W. DIRECTOR/CITY ENGINEER — DATE 12/2/14

REVISIONS: DATE | BY | MARK | APPROVED

CONCRETE THRUST BLOCKS FOR PIPELINES, CLASS 200 P.S.I. MAX

CITY OF RIALTO, CALIFORNIA
PUBLIC WORKS DEPARTMENT
ENGINEERING DIVISION

STANDARD NO. RW-722-0 | SHT 3 OF 4

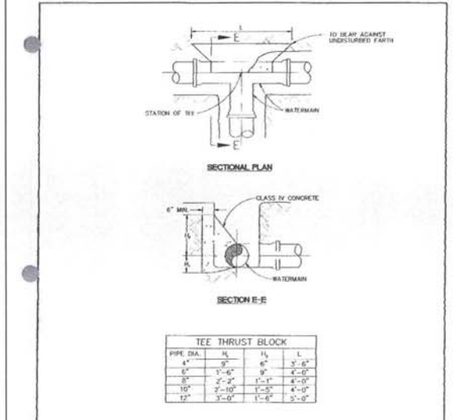

TEE THRUST BLOCK			
PIPE DIA.	H_1	H_2	L
4"	9"	6"	3'-6"
6"	1'-6"	9"	4'-0"
8"	2'-2"	1'-1"	4'-0"
10"	2'-10"	1'-3"	4'-0"
12"	3'-0"	1'-6"	5'-0"

TEE THRUST BLOCK

NOT TO SCALE

APPROVED BY: P.W. DIRECTOR/CITY ENGINEER — DATE 12/2/14

REVISIONS: DATE | BY | MARK | APPROVED

CONCRETE THRUST BLOCKS FOR PIPELINES, CLASS 200 P.S.I. MAX

CITY OF RIALTO, CALIFORNIA
PUBLIC WORKS DEPARTMENT
ENGINEERING DIVISION

STANDARD NO. RW-722-0 | SHT 4 OF 4

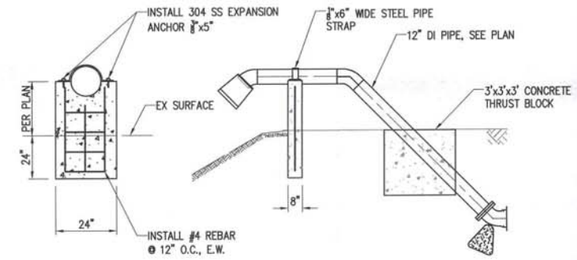

DISCHARGE TO BASIN THRUST BLOCK

1 CONCRETE THRUST BLOCK

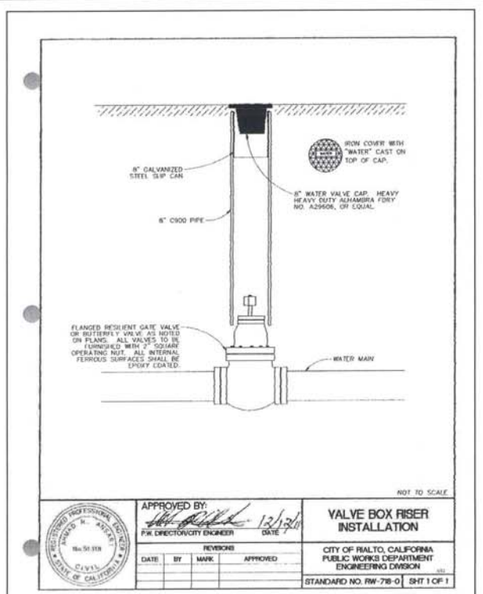

NOT TO SCALE

APPROVED BY: P.W. DIRECTOR/CITY ENGINEER — DATE 12/2/14

REVISIONS: DATE | BY | MARK | APPROVED

VALVE BOX RISER INSTALLATION

CITY OF RIALTO, CALIFORNIA
PUBLIC WORKS DEPARTMENT
ENGINEERING DIVISION

STANDARD NO. RW-718-0 | SHT 1 OF 1

2 VALVE BOX RISER INSTALLATION

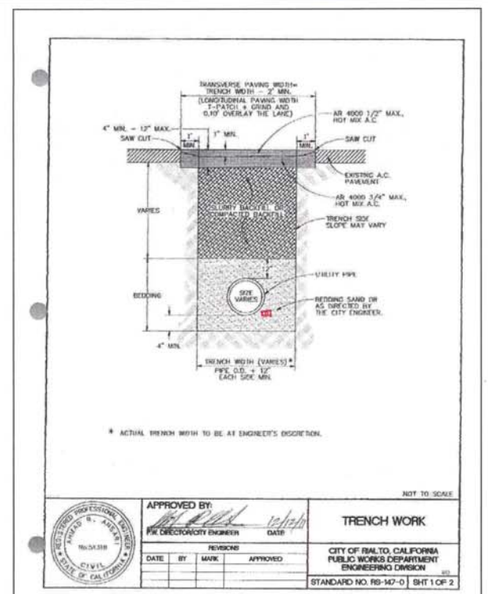

NOT TO SCALE

APPROVED BY: P.W. DIRECTOR/CITY ENGINEER — DATE 12/2/14

REVISIONS: DATE | BY | MARK | APPROVED

TRENCH WORK

CITY OF RIALTO, CALIFORNIA
PUBLIC WORKS DEPARTMENT
ENGINEERING DIVISION

STANDARD NO. RS-147-0 | SHT 1 OF 2

3 TRENCH

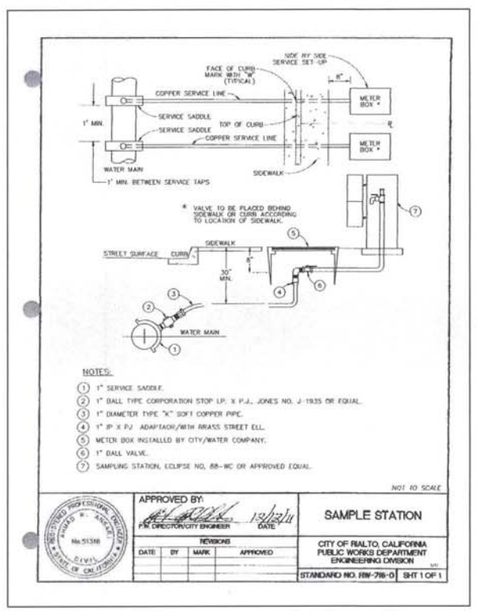

NOTES:

1. 1" SERVICE SADDLE.
2. 1" BALL TYPE CORPORATION STOP I.P. X P.J., JONES NO. J-1935 OR EQUAL.
3. 1" DIAMETER TYPE "K" SOFT COPPER PIPE.
4. 1" IP X PJ ADAPTAOR/WITH ARRASS STREET ELL.
5. METER BOX INSTALLED BY CITY/WATER COMPANY.
6. 1" BALL VALVE.
7. SAMPLING STATION, ECLIPSE NO. 88-WC OR APPROVED EQUAL.

NOT TO SCALE

APPROVED BY: P.W. DIRECTOR/CITY ENGINEER — DATE 12/2/14

REVISIONS: DATE | BY | MARK | APPROVED

SAMPLE STATION

CITY OF RIALTO, CALIFORNIA
PUBLIC WORKS DEPARTMENT
ENGINEERING DIVISION

STANDARD NO. RW-716-0 | SHT 1 OF 1

4 SAMPLE TESTING

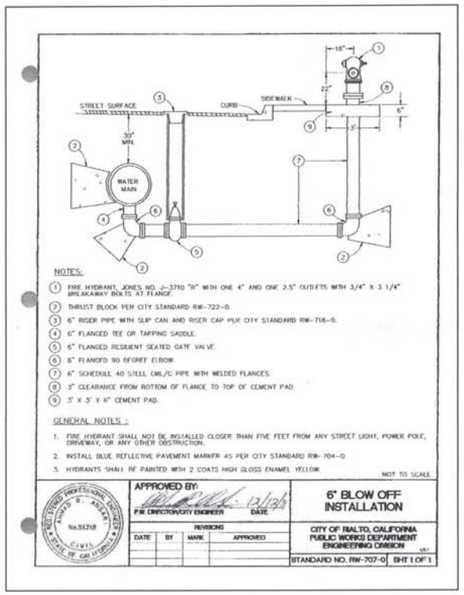

NOTES:

1. FIRE HYDRANT, JONES NO. J-3710 "W" WITH ONE 4" AND ONE 2.5" OUTLETS WITH 3/4" X 3 1/4" BREAKAWAY BOLTS AT FLANGE.
2. THRUST BLOCK PER CITY STANDARD RW-722-0.
3. 6" RISER PIPE WITH SLIP CAN AND RISER CAP PER CITY STANDARD RW-718-0.
4. 6" FLANGED TEE OR TAPPING SADDLE.
5. 6" FLANGED RESILIENT SEATED GATE VALVE.
6. 6" FLANGED 90 DEGREE ELBOW.
7. 6" SCHEDULE 40 STEEL CML/C PIPE WITH WELDED FLANGES.
8. 3" CLEARANCE FROM BOTTOM OF FLANGE TO TOP OF CEMENT PAD.
9. 3' X 3' X 6" CEMENT PAD.

GENERAL NOTES :

1. FIRE HYDRANT SHALL NOT BE INSTALLED CLOSER THAN FIVE FEET FROM ANY STREET LIGHT, POWER POLE, DRIVEWAY, OR ANY OTHER OBSTRUCTION.
2. INSTALL BLUE REFLECTIVE PAVEMENT MARKER AS PER CITY STANDARD RW-704-0.
3. HYDRANTS SHALL BE PAINTED WITH 2 COATS HIGH GLOSS ENAMEL YELLOW.

NOT TO SCALE

APPROVED BY: P.W. DIRECTOR/CITY ENGINEER — DATE 12/2/14

REVISIONS: DATE | BY | MARK | APPROVED

6" BLOW OFF INSTALLATION

CITY OF RIALTO, CALIFORNIA
PUBLIC WORKS DEPARTMENT
ENGINEERING DIVISION

STANDARD NO. RW-707-0 | SHT 1 OF 1

5 BLOW-OFF INSTALLATION

REV	DATE	REVISION	APPR'D	REV BY

REGISTERED PROFESSIONAL ENGINEER — CHRISTOPHER SHEM HAWES — Exp. 6/30/2014 — No. 69578 — CIVIL — STATE OF CALIFORNIA

PLANS PREPARED BY:

General Civil, Transportation, Municipal, Water and Wastewater Engineering, Planning, Construction Management, and Surveying

118 West Lime Avenue
Monrovia, Ca. 91016
Phone: (626) 357-0588
Fax: (626) 303-7957

CIVILTEC engineering inc.
Monrovia • Prescott • Phoenix

ERM

GROUNDWATER EXTRACTION AND TREATMENT SYSTEM COMBINED REMEDY SOURCE AREA OPERABLE UNIT, ROCKETS, FIREWORKS, AND FLARES SUPERFUND SITE

SCALE	DESIGNED BY	DRAWN BY	DRAWING NUMBER
AS SHOWN	JM/BS/BD/CD	JM/BS/CD	
DATE / SCALE	CHECKED BD/CSH	APPROVED	JOB NUMBER 2013175.00

REV | SHEET 24 | DISCIPLINE NO. C-19

GENERAL CIVIL DETAILS

ENVIRONMENTAL RESOURCES MANAGEMENT

X:\2013\2013175.00-ERM-RIALTO TREATMENT PLANT EXPANSION\DWG\TREATMENT PLANT\2013175.00 RIALTO-SHT24 C-19 GENERAL CIVIL DETAILS.DWG

X:\2013\2013175.00-ERM-RIALTO TREATMENT PLANT EXPANSION\DWG\TREATMENT PLANT\2013175.00 RIALTO-SHT25 C-20 GENERAL CIVIL DETAILS.DWG

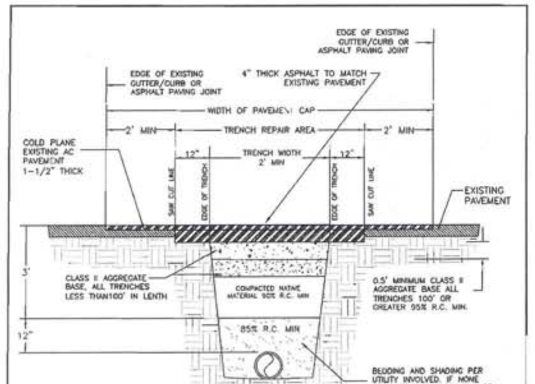

GENERAL NOTES

1.) TRENCH BACFILL SHALL BE BE PER SECTION 306-1.3 OF THE STANDARD SPECIFICATIONS FOR PUBLIC WORKS CONSTRUCTIONS, EXCEPT AS SHOWN ON THIS DRAWING.

2) COMPACTION OF BACKFILL SHALL BE VERIFIED BY CONTRACTOR AND APPROVED BY THE ENGINEERING DEPARTMENT PRIOR TO THE PLACING OF PERMANENT PAVEMENT. COMPACTION TESTS SHALL BE TAKEN BY A LICENSED ENGINEER OR TESTING LABORATORY AT RANDOM LOCATIONS SELECTED BY THE TESTING FIRM AND/OR THE CITY ENGINEER. LONGITUDINAL TENCHES SHALL HAVE A COMPLETE SERIES OF COMPACTION TESTS TAKEN FOR EACH FOUR FEET OF THICKNESS OF BACKFILL PLACED. EACH SERIES SHALL CONSIST OF TESTS TAKEN AT APPROXIMATE MAXIMUM INTERVALS OF 250 FEET. LATERAL TRENCHES SHALL HAVE COMPACTION TESTS TAKEN ON 50% OF THE LATERALS. ONE TEST FOR EACH FOUR FEET OF THE DEPTH OF THE LATERAL.

3) UNDERGROUND SERVICE ALERT SHALL BE NOTIFIED 2 WORKING DAYS PRIOR TO THE START OF WORK. 1-800-422-4133

4) UNTIL PERMANENT PAVMENT IS REPLACED OVER A BACKFILLED TRENCH, MINIMUM 2" THICKNESS OF TEMPORARY ASPHALT CONCRETE PAVING SHALL BE WITHIN THE TRENCH AREA. THE TEMPORARY PAVING SHALL BE PLACED AND COMPACTED IN SUCH A MANNER AS TO PROVIDE A SAFE AND SMOOTH TRAVELED SURFACE. PERMITTEE SHALL MAINTAIN THE TEMPORARY PAVEMENT IN THIS SAFE AND SMOOTH CONDITION UNTIL PERMANENT PAVING IS IN PLACE.

5) PRIOR TO PLACEMENT OF PERMANENT PAVING, EXISTING PAVEMENT SHALL BE CUT TO A NEAT STRAIGHT EDGE. CRACKED PAVEMENT ADJACENT TO THE TRENCH SHALL BE REMOVED.

6) ALL EDGES OF EXISTING PAVEMENT BEING JOINED AND SURFACE BEING OVERLAID SHALL RECIEVE A TACK COAT OF ASPHALT EMULSION.

7) ALL TRENCHES EXCEEDING 400 FEET IN LENGTH, MUST BE CAPPED WITH A MINIMUM 10 FOOT WIDTH UTILIZING A PAVING MACHINE. MINIMUM OF 1" THICKNESS (DI-AR-4000) ABOVE EXISTING PAVEMENT, EXCEPT WHERE EDGES ARE FEATHERED AS DIRECTED BY THE CITY ENGINEER.

8) ALL ASPHALT PAVING SHALL MATCH TO THE EXISTING PAVEMENT MATERIALS INCLUDING RUBBERIZED ASPHALT

NO.	REVISIONS/DATE	APPV'D BY

CITY OF COLTON
PUBLIC WORKS DEPARTMENT
TRENCH REPAIR

DRAWN BY JCS	SCALE NTS	DRAWING NO.
CHECKED BY VO	DATE JUNE 24, 2009	124
APPROVED BY [signature] THOMAS L WILLIAMS, P.E.		

1 TRENCH REPAIR

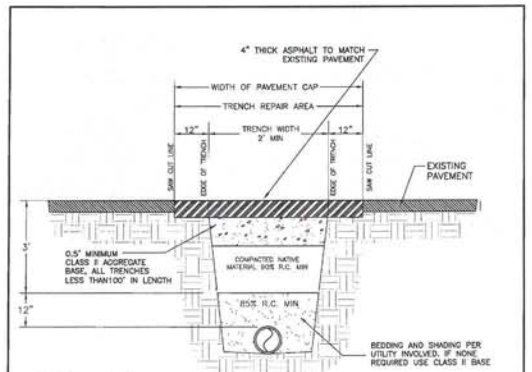

GENERAL NOTES

1.) TRENCH BACFILL SHALL BE BE PER SECTION 306-1.3 OF THE STANDARD SPECIFICATIONS FOR PUBLIC WORKS CONSTRUCTIONS, EXCEPT AS SHOWN ON THIS DRAWING.

2) COMPACTION OF BACKFILL SHALL BE VERIFIED BY CONTRACTOR AND APPROVED BY THE ENGINEERING DEPARTMENT PRIOR TO THE PLACING OF PERMANENT PAVEMENT. COMPACTION TESTS SHALL BE TAKEN BY A LICENSED ENGINEER OR TESTING LABORATORY AT RANDOM LOCATIONS SELECTED BY THE TESTING FIRM AND/OR THE CITY ENGINEER. LONGITUDINAL TENCHES SHALL HAVE A COMPLETE SERIES OF COMPACTION TESTS TAKEN FOR EACH FOUR FEET OF THICKNESS OF BACKFILL PLACED. EACH SERIES SHALL CONSIST OF TESTS TAKEN AT APPROXIMATE MAXIMUM INTERVALS OF 250 FEET. LATERAL TRENCHES SHALL HAVE COMPACTION TESTS TAKEN ON 50% OF THE LATERALS. ONE TEST FOR EACH FOUR FEET OF THE DEPTH OF THE LATERAL.

3) UNDERGROUND SERVICE ALERT SHALL BE NOTIFIED 2 WORKING DAYS PRIOR TO THE START OF WORK. 1-800-422-4133

4) UNTIL PERMANENT PAVMENT IS REPLACED OVER A BACKFILLED TRENCH, MINIMUM 2" THICKNESS OF TEMPORARY ASPHALT CONCRETE PAVING SHALL BE WITHIN THE TRENCH AREA. THE TEMPORARY PAVING SHALL BE PLACED AND COMPACTED IN SUCH A MANNER AS TO PROVIDE A SAFE AND SMOOTH TRAVELED SURFACE. PERMITTEE SHALL MAINTAIN THE TEMPORARY PAVEMENT IN THIS SAFE AND SMOOTH CONDITION UNTIL PERMANENT PAVING IS IN PLACE.

5) PRIOR TO PLACEMENT OF PERMANENT PAVING, EXISTING PAVEMENT SHALL BE CUT TO A NEAT STRAIGHT EDGE. CRACKED PAVEMENT ADJACENT TO THE TRENCH SHALL BE REMOVED.

6) ALL EDGES OF EXISTING PAVEMENT BEING JOINED AND SURFACE BEING OVERLAID SHALL RECIEVE A TACK COAT OF ASPHALT EMULSION.

7) ALL TRENCHES EXCEEDING 400 FEET IN LENGTH, MUST BE CAPPED WITH A MINIMUM 10 FOOT WIDTH UTILIZING A PAVING MACHINE. MINIMUM OF 1" THICKNESS (DI-AR-4000) ABOVE EXISTING PAVEMENT, EXCEPT WHERE EDGES ARE FEATHERED AS DIRECTED BY THE CITY ENGINEER. REFER TO TRENCH REPAIR CITY STANDARD DWG NO. 124.

8) ALL ASPHALT PAVING SHALL MATCH TO THE EXISTING PAVEMENT MATERIALS INCLUDING RUBBERIZED ASPHALT

NO.	REVISIONS/DATE	APPV'D BY

CITY OF COLTON
PUBLIC WORKS DEPARTMENT
EXCAVATION REPAIR

DRAWN BY JCS	SCALE NTS	DRAWING NO.
CHECKED BY VO	DATE SEPT 30, 2009	124a
APPROVED BY [signature] THOMAS L WILLIAMS, P.E.		

2 EXCAVATION REPAIR

NOTES:

1 CONCRETE THRUST BLOCKS ARE TO BE POURED AGAINST UNDISTURBED EARTH.
2 CONCRETE THRUST BLOCKS SHALL BE OF CLASS 'C' (4 ½ SACK MIX) CONCRETE.
3 ALL GATE VALVES SHALL BE SUPPORTED PER DETAIL 'A' BELOW & STD. DWG. 704.
4 PLUG ALL STUBS PER SPECS.
5 ALL CONCRETE SHALL BE POURED TO AVOID INTERFERENCE WITH BOLTED CONNECTIONS.
6 WHERE PIPE CONNECTS TO A FITTING IN A STEEL PIPELINE, THE STEEL PIPELINE SHALL BE BLOCKED AS SHOWN HEREON.
7 CONCRETE SHALL BE CONFINED BY FORMS TO PROVIDE A MINIMUM CLEARANCE OF 4" AT FLANGE BOLTS AND NUTS.
8 THRUST BLOCKS SHALL BE PLACED AT ALL TEES, WYES, COPS, ELIS, VALVES, REDUCERS, AND HYDRANTS.

THRUST BLOCK TABLES

PIPE SIZE IN.	TYPE OF FITTING	SAFE SOIL BEARING #/S.F.	THRUST BLOCK DIMENSIONS CLASS 150 HT-WIDTH	CLASS 200 HT-WIDTH	SAFE SOIL BEARING #/S.F.	THRUST BLOCK DIMENSIONS CLASS 150 HT-WIDTH	CLASS 200 HT-WIDTH	SAFE SOIL BEARING #/S.F.	THRUST BLOCK DIMENSIONS CLASS 150 HT-WIDTH	CLASS 200 HT-WIDTH	SAFE SOIL BEARING #/S.F.	THRUST BLOCK DIMENSIONS CLASS 150 HT-WIDTH	CLASS 200 HT-WIDTH
16	TEE	1500	5'x7'	6'x7'	2000	4'x7'	5'x6'	3000	4'x5'	4'x5'	5000	3'x3'	3'x4'
16	90° BEND	1500	5x10	6x10	2000	5x8	5x9	3000	4x6	5x6	5000	3x5	3x6
16	45° BEND	1500	4x7	4x8	2000	4x5	4x6	3000	3x5	4x4	5000	2x4	2x5
16	22 1/2° BEND	1500	3x5	4x4	2000	3x4	3x4	3000	2x4	3x3	5000	2x2	2x3
14	TEE	1500	4x7	4x8	2000	4x5	4x6	3000	3x5	4x4	5000	3x3	2x5
14	90° BEND	1500	5x10	5x9	2000	5x8	5x7	3000	5x5	4x6	5000	3x5	3x5
14	45° BEND	1500	4x5	4x6	2000	4x4	3x6	3000	3x4	3x4	5000	2x3	2x4
14	22 1/2° BEND	1500	3x4	3x4	2000	2x4	3x3	3000	2x3	2x6	5000	1x3	2x2
12	TEE	1500	4x5	4x6	2000	3x5	3x6	3000	3x4	3x4	5000	2x3	2x4
12	90° BEND	1500	4x7	4x8	2000	4x6	4x6	3000	3x5	4x4	5000	3x3	2x5
12	45° BEND	1500	4x4	3x6	2000	3x4	3x5	3000	2x4	3x3	5000	2x3	2x3
12	22 1/2° BEND	1500	2x4	3x3	2000	2x3	2x4	3000	2x2	2x3	5000	1x3	1x3
8	TEE	1500	3x3	2x5	2000	2x3	2x4	3000	2x3	2x3	5000	1x3	1x3
8	90° BEND	1500	3x4	3x5	2000	3x3	3x4	3000	2x3	2x4	5000	2x2	2x3
8	45° BEND	1500	2x4	2x4	2000	2x3	2x6	3000	2x2	2x2	5000	1x2	1x3
8	22 1/2° BEND	1500	2x2	2x2	2000	1x3	1x3	3000	1x2	1x2	5000	1x1	1x1
6	TEE	1500	2x3	2x3	2000	2x2	2x2	3000	1x3	1x3	5000	1x2	1x2
6	90° BEND	1500	2x4	2x4	2000	2x3	2x3	3000	2x2	2x2	5000	1x2	1x3
6	45° BEND	1500	2x2	2x2	2000	1x3	2x2	3000	1x2	1x3	5000	1x1	1x2
6	22 1/2° BEND	1500	1x2	1x2	2000	1x2	1x2	3000	1x1	1x1	5000	1x1	1x1
4	TEE	1500	1x3	1x3	2000	1x2	1x2	3000	1x2	1x2	5000	1x1	1x1
4	90° BEND	1500	2x2	2x2	2000	1x3	1x3	3000	1x2	1x2	5000	1x1	1x1
4	45° BEND	1500	1x3	1x2	2000	1x2	1x2	3000	1x1	1x1	5000	0	1x1
4	22 1/2° BEND	1500	1x1	1x1	2000	1x1	1x1	3000	0	1x1	5000	0	0

TYPICAL THRUST BLOCKS INSTALLATION

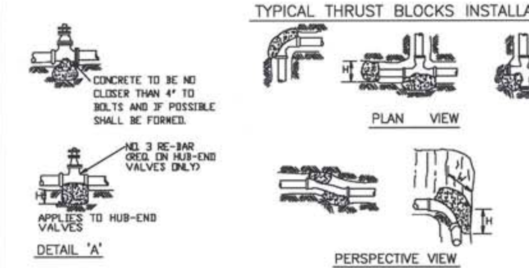

CITY OF COLTON
WATER /WASTEWATER DEPARTMENT
THRUST BLOCK INSTALLATION
CLASS 150 & 200

DATE: MAY 2006	SCALE: N.T.S.	DWG. NO.
DWN BY:	REV: SMH	703
APP'D BY: DIRECTOR		

3 CONCRETE THRUST BLOCK

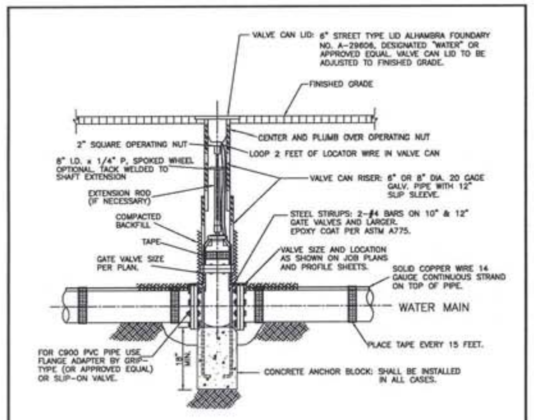

NOTES:
1. FABRICATED EXTENSION STEM REQUIRED IF VALVE NUT IS MORE THAN 36" BELOW FINISHED GRADE.
2. GATE VALVE TO BE MUELLER, M&H (RESILIENT SEAT) OR APPROVED EQUAL.
3. ANCHOR BLOCKS SHALL BE 450-C-2000 CLASS CONCRETE. CONCRETE SHALL BE POURED AGAINST UNDISTURBED SOIL.
4. VALVE CAN LID TO BE PAINTED DUNN EDWARDS OCEAN BLUE #S8009, TWO(2) COATS.

CITY OF COLTON
WATER/WASTEWATER DEPARTMENT
TYPICAL GATE VALVE ASSEMBLY

DATE: MAY 2006	SCALE: N.T.S.	DWG. NO.
DWN BY:	REV: S.M.H	704
APP'D BY: DIRECTOR		

4 GATE VALVE ASSEMBLY

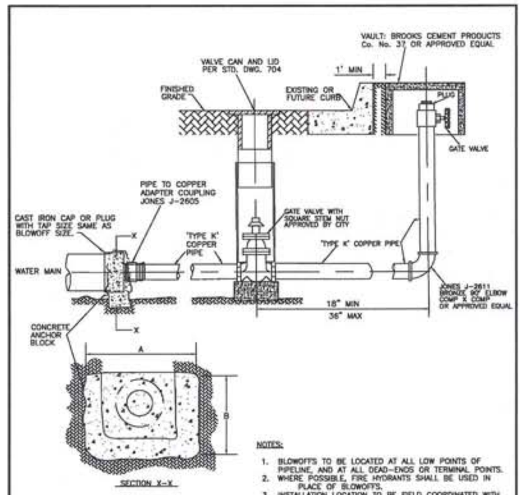

DIMENSION OF ANCHOR		
PIPE SIZE	DIMENSION A	DIMENSION B
4"-6"	3'	12"
8"	4'	12"
10"	5'	18"

NOTES:
1. BLOWOFFS TO BE LOCATED AT ALL LOW POINTS OF PIPELINE, AND AT ALL DEAD-ENDS OR TERMINAL POINTS.
2. WHERE POSSIBLE, FIRE HYDRANTS SHALL BE USED IN PLACE OF BLOWOFFS.
3. INSTALLATION LOCATION TO BE FIELD COORDINATED WITH UTILITIES INSPECTOR.
4. FOR INSTALLATIONS OUTSIDE OF PAVED ROADWAYS, THE ASSEMBLY SHALL BE INSTALLED CLEAR OF THE TRAVELED WAY AND PROTECTED WITH GUARD POSTS AS DIRECTED BY THE CITY.
5. PIPE SIZE AND FITTINGS TO MATCH BLOWOFF SIZE.

CITY OF COLTON
WATER/WASTEWATER DEPARTMENT
TYPICAL 2" OR 3" BLOW-OFF ASSEMBLY

DATE: MAY 2006	SCALE: N.T.S.	DWG. NO.
DWN BY: S.M.H	REV:	706
APP'D BY: DIRECTOR		

5 TYPICAL 2" BLOW-OFF

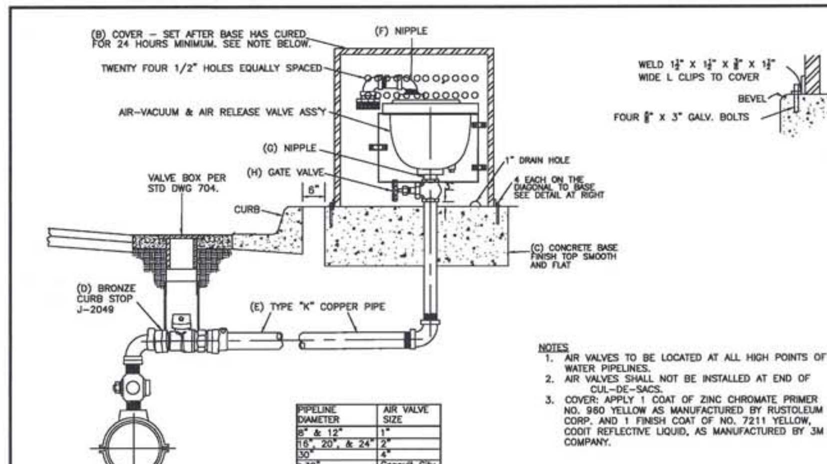

NOTES
1. AIR VALVES TO BE LOCATED AT ALL HIGH POINTS OF WATER PIPELINES.
2. AIR VALVES SHALL NOT BE INSTALLED AT END OF CUL-DE-SACS.
3. COVER: APPLY 1 COAT OF ZINC CHROMATE PRIMER NO. 960 YELLOW AS MANUFACTURED BY RUSTOLEUM CORP. AND 1 FINISH COAT OF NO. 7211 YELLOW, CODIT REFLECTIVE LIQUID, AS MANUFACTURED BY 3M COMPANY.

PIPELINE DIAMETER	AIR VALVE SIZE
8" & 12"	1"
16", 20", & 24"	2"
30"	4"
>30"	Consult City

	(A) SIZE OF AIR-VAC. & AIR RELEASE VALVE.	(B) STEEL COVER 10 GUAGE MIN.	(C) CONCRETE BASE	(D)	(E)	(F)	(G)	(H) GATE VALVE	
1"	VALVE & PRIMER CORP S-143-C OR APPROVED EQUAL	14" DIA X 24" HIGH	10" SQ. X 12" DEEP	1"	1"	1" x 3"	1" x 3"	1"	FIG. 97 OR APPRVED EQUAL
2"	VALVE & PRIMER CORP S-145-C OR APPROVED EQUAL	18" DIA X 28" HIGH	24" SQ. X 12" DEEP	2"	2"	2" x 3"	2" x 3"	2"	FIG. 97 OR APPRVED EQUAL
3"	VALVE & PRIMER CORP S-147-C OR APPROVED EQUAL	20" DIA X 24" HIGH	24" SQ. X 12" DEEP	3"	3"	3" X 4"	OMIT		
4"	VALVE & PRIMER CORP S-149-C OR APPROVED EQUAL	20" DIA X 24" HIGH	24" SQ. X 12" DEEP	4"	4"	4" X 4"	OMIT		

CITY OF COLTON
WATER/WASTEWATER DEPARTMENT
AIR VACUUM ASSEMBLY

DATE: JUNE 2006	SCALE: N.T.S.	DWG. NO.
DWN BY: S.M.H	REV:	707
APP'D BY: DIRECTOR		

6 AIR VACUUM ASSEMBLY

REGISTERED PROFESSIONAL ENGINEER
CHRISTOPHER SHEM HAWES
Exp. 6/30/2014
No. 69578
CIVIL
STATE OF CALIFORNIA
6/18/14

PLANS PREPARED BY:

General Civil, Transportation, Municipal, Water and Wastewater Engineering, Planning, Construction Management, and Surveying

118 West Lime Avenue
Monrovia, Ca. 91016
Phone: (626) 357-0588
Fax: (626) 303-7957

CIVILTEC engineering inc.
Monrovia • Prescott • Phoenix

ERM

REV	DATE	REVISION	APPR'D	REV BY

GROUNDWATER EXTRACTION AND TREATMENT SYSTEM COMBINED REMEDY SOURCE AREA OPERABLE UNIT, ROCKETS, FIREWORKS, AND FLARES SUPERFUND SITE

SCALE AS SHOWN	DESIGNED BY JM/BS/BD/CD	DRAWN BY JM/BS/CD	DRAWING NUMBER	REV
DATE SCALE	CHECKED BD/CSH	APPROVED	JOB NUMBER 2013175.00	SHEET 25

GENERAL CIVIL DETAILS

DISCIPLINE NO. C-20

ENVIRONMENTAL RESOURCES MANAGEMENT

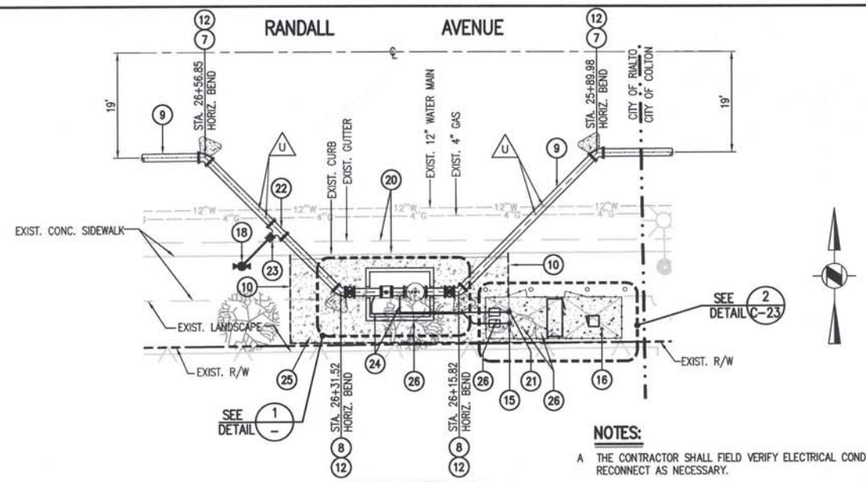

PLAN VIEW 1 C-16

SCALE: 1" = 10'

NOTES:

A THE CONTRACTOR SHALL FIELD VERIFY ELECTRICAL CONDUITS, REROUTE AND RECONNECT AS NECESSARY.

B THE CONTRACTOR SHALL FIELD VERIFY IRRIGATION LINES, APPURTENANCES, REROUTE AND RECONNECT AS NECESSARY.

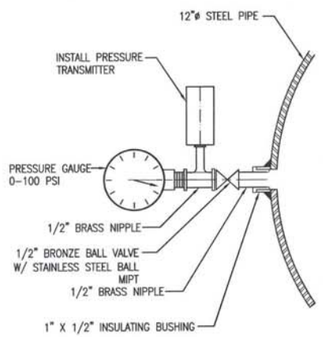

2 PRESSURE GAUGE ASSEMBLY

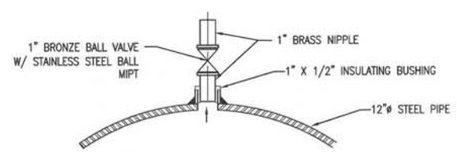

3 1" WELD-O-LET

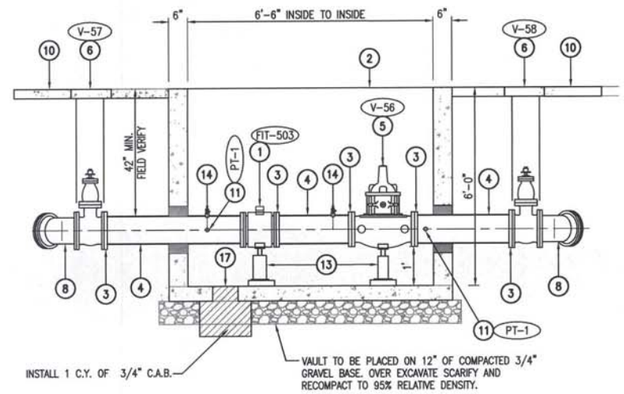

SECTION A

NOT TO SCALE

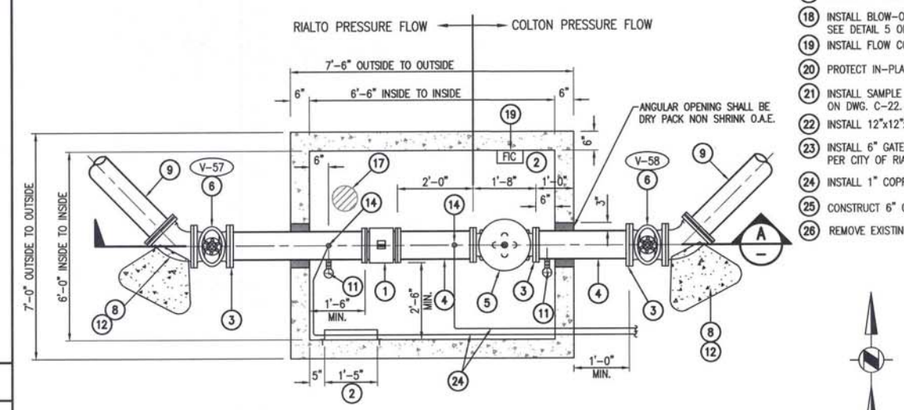

CONCRETE VAULT AND METER DETAIL 1

NOT TO SCALE

CONSTRUCTION NOTES: (THIS SHEET ONLY)

1. INSTALL 12" MAG METER ASSEMBLY, FExFE, MODEL SITRAN FM 5100W.
2. INSTALL CONCRETE VAULT, METER READING LID, LADDER ASSEMBLY, H20 TRAFFIC RATED DOUBLE DOOR ACCESS COVER PER CITY OF RIALTO STD NO. RW-103-OW, SEE DETAIL 1 ON DWG. C-22.
3. INSTALL 12" STEEL SLIP-ON WELDING FLANGE WITH ISOLATING KIT.
4. INSTALL 12" STANDARD STEEL PIPE, PExPE, CML LINING AND COATING PER SPECIFICATION.
5. INSTALL 12" ELECTRONIC CONTROL VALVE, FExFE, CLA-VAL VALVE, MODEL 131 CW.
6. INSTALL 12" GATE VALVE, M&H, STYLE 7561, FExFE, W/ VALVE BOX AND COVER PER CITY OF RIALTO STD. NO. RW-718-0, SEE DETAIL 2 ON DWG. C-19.
7. INSTALL 12"-45° DUCTILE IRON BEND, MJxMJ.
8. INSTALL 12"-45° DUCTILE IRON BEND, FLGxMJ.
9. INSTALL 12" DUCTILE IRON PIPE, CML, CLASS 350.
10. SAWCUT, REMOVE AND REPLACE CONCRETE SIDEWALK PER CITY OF RIALTO STD. NO. RS-119C-0, SEE DETAIL 3 ON DWG. C-22.
11. INSTALL PRESSURE GAUGE AND TRANSMITTER ASSEMBLY ON SIDE OF PIPE PER DETAIL 2 HEREON.
12. INSTALL CONCRETE THRUST BLOCK PER CITY OF RIALTO STD. NO. RW-722-0, SEE DETAIL 1 ON DWG. C-19.
13. INSTALL ADJUSTABLE PIPE SUPPORT PER DETAIL 4 ON DWG. M-6.
14. INSTALL 1" WELD-O-LET, & 1" BALL VALVE, STAINLESS STEEL BALL ON TOP OF PIPE (FOR TESTING), SEE DETAIL 3 HEREON.
15. INSTALL SAMPLE STATION PER CITY OF RIALTO STD. NO. RW-716-0, SEE DETAIL 4 ON DWG. C-19.
16. INSTALL ANTENNA PER ELECTRICAL PLANS.
17. PROVIDE 8" DRAIN WITH STAINLESS GRATE.
18. INSTALL BLOW-OFF PER CITY OF RIALTO STD. NO. RW-707-0, SEE DETAIL 5 ON DWG. C-19.
19. INSTALL FLOW CONTROLLER TRANSMITTER, MODEL SITRAN FM MAG 6000.
20. PROTECT IN-PLACE EXIST. CONCRETE CURB AND GUTTER.
21. INSTALL SAMPLE STATION PER CITY OF COLTON STD. DWG. 712. SEE DETAIL 4 ON DWG. C-22.
22. INSTALL 12"x12"x6" TEE. FLGxFLGxFLG.
23. INSTALL 6" GATE VALVE, M&H, STYLE 7561, FExFE, W/ VALVE BOX AND COVER PER CITY OF RIALTO STD. NO. RW-718-0, SEE DETAIL 2 ON DWG. C-19.
24. INSTALL 1" COPPER LINE WITH SUPPORT FOR WATER SAMPLE FOR CITIES.
25. CONSTRUCT 6" CONCRETE SLAB WITH 6x6-10 WWF.
26. REMOVE EXISTING TREE, BUSHES AND ROOTS AS NECESSARY.

NOTES TO THE CONTRACTOR

1. THE CONTRACTOR SHALL POTHOLE, FIELD VERIFY ALL UTILITY CROSSINGS, AND EXISTING 12" WATER LINE.
2. THE CONTRACTOR SHALL FIELD VERIFY SANITARY SEWER AND OTHER UTILITIES AT THE NEW WATER LINE CROSSING.
3. INSTALL ISOLATION KITS BETWEEN FLANGES OF DISSIMILAR METALS, SEE DETAIL 3 ON M-12..

DIAL 811 DIGALERT UNDERGROUND SERVICE ALERT

PLAY IT SAFE. DIAL BEFORE YOU DIG!

AT LEAST TWO WORKING DAYS PRIOR TO EXCAVATING

REGISTERED PROFESSIONAL ENGINEER CHRISTOPHER SHEM HAWES Exp. 6/30/2014 No. 69578 CIVIL STATE OF CALIFORNIA 6/18/14

PLANS PREPARED BY:

General Civil, Transportation, Municipal, Water and Wastewater Engineering, Planning, Construction Management, and Surveying

118 West Lime Avenue
Monrovia, Ca. 91016
Phone: (626) 357-0588
Fax: (626) 303-7957

CIVILTEC engineering inc.
Monrovia • Prescott • Phoenix

ERM

REV	DATE	REVISION	APPR'D	REV BY

GROUNDWATER EXTRACTION AND TREATMENT SYSTEM COMBINED REMEDY SOURCE AREA OPERABLE UNIT, ROCKETS, FIREWORKS, AND FLARES SUPERFUND SITE

SCALE	DESIGNED BY	DRAWN BY	DRAWING NUMBER
AS SHOWN	JM/BS/BD/CD	JM/BS/CD	
DATE / SCALE	CHECKED	APPROVED	JOB NUMBER
	BD/CSH		2013175.00

GENERAL CIVIL DETAILS

ENVIRONMENTAL RESOURCES MANAGEMENT

REV

SHEET 26

DISCIPLINE NO. C-21

X:\2013\2013175.00-ERM-RIALTO TREATMENT PLANT EXPANSION\DWG\TREATMENT PLANT\2013175.00 RIALTO-SHEEN C-21 GENERAL CIVIL DETAILS.DWG

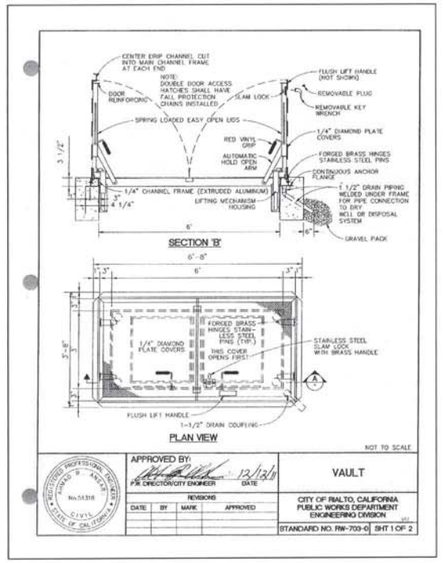

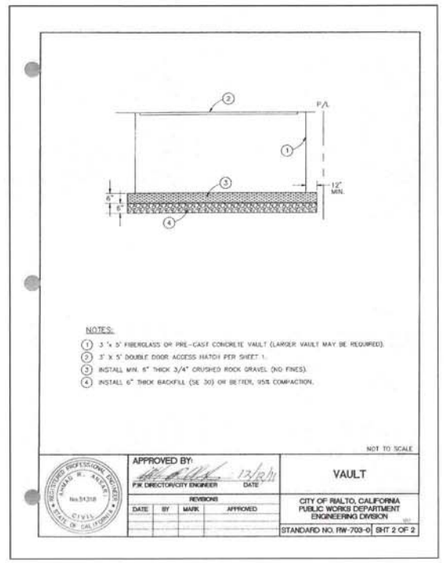

1 VAULT AND LID

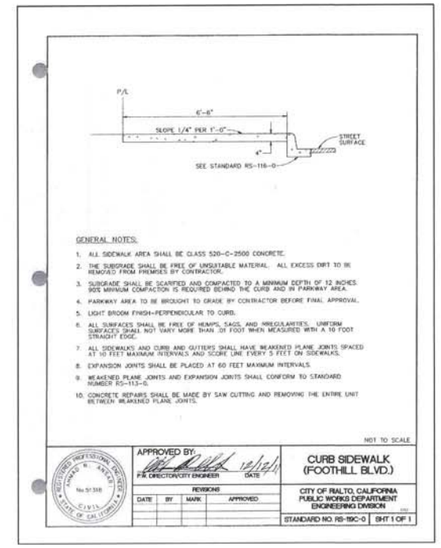

2 CURB SIDEWALK

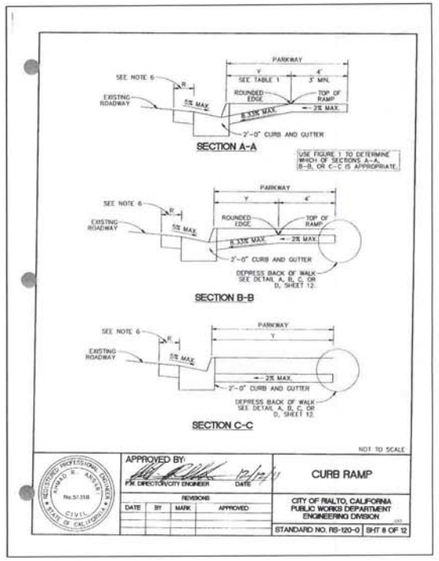

3 CURB RAMP

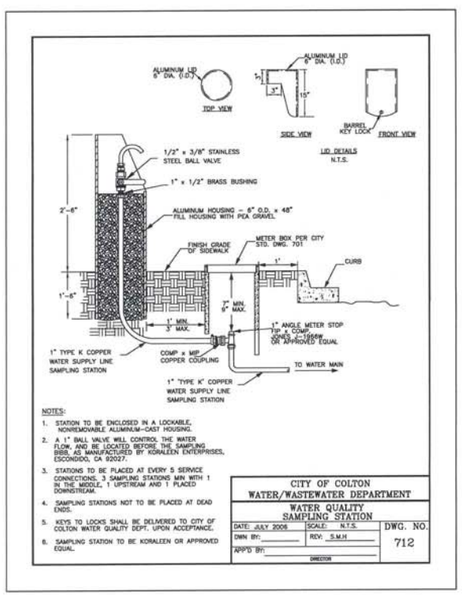

4 WATER QUALITY SAMPLE STATION

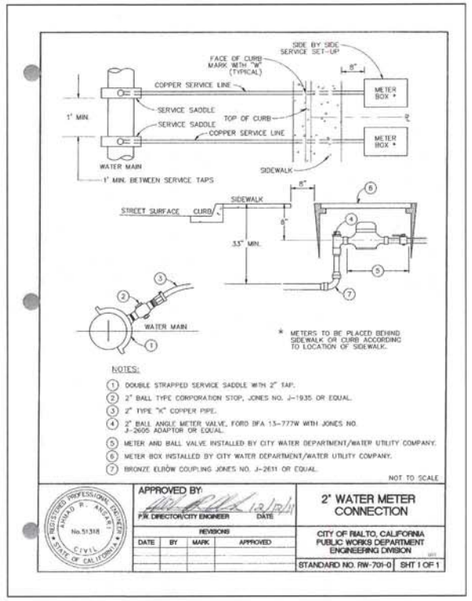

5 2" WATER METER CONNECTION

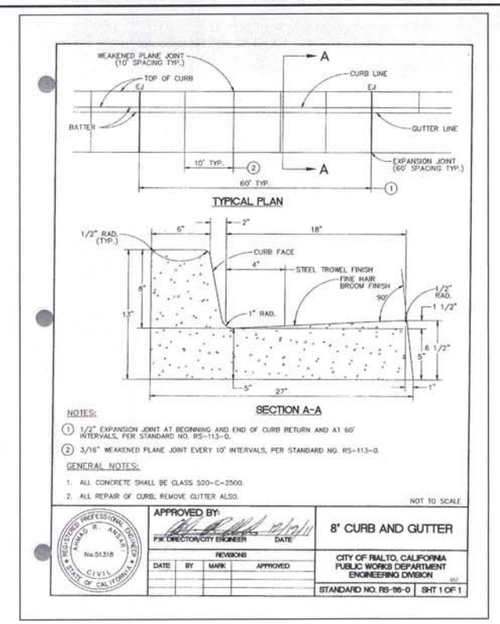

6 8" CONCRETE CURB AND GUTTER

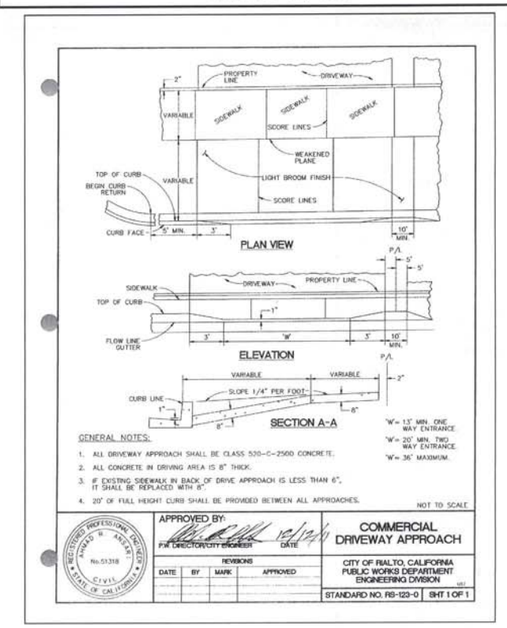

7 COMMERCIAL DRIVEWAY APPROACH

REV	DATE	REVISION	APPR'D	REV BY

REGISTERED PROFESSIONAL ENGINEER — CHRISTOPHER DREM HAWES — Exp. 6/30/2014 — No. 69578 — CIVIL — STATE OF CALIFORNIA — 6/18/14

PLANS PREPARED BY:

General Civil, Transportation, Municipal, Water and Wastewater Engineering, Planning, Construction Management, and Surveying

118 West Lime Avenue
Monrovia, Ca. 91016
Phone: (626) 357-0588
Fax: (626) 303-7957

CIVILTEC engineering inc.
Monrovia • Prescott • Phoenix

ERM

GROUNDWATER EXTRACTION AND TREATMENT SYSTEM COMBINED REMEDY SOURCE AREA OPERABLE UNIT, ROCKETS, FIREWORKS, AND FLARES SUPERFUND SITE

SCALE	AS SHOWN	DESIGNED BY	JM/BS/BD/CD	DRAWN BY	JM/BS/CD	DRAWING NUMBER	
DATE	SCALE	CHECKED	BD/CSH	APPROVED		JOB NUMBER	2013175.00

REV

SHEET 27

GENERAL CIVIL DETAILS

DISCIPLINE NO. C-22

ENVIRONMENTAL RESOURCES MANAGEMENT

X:\2013\2013175.00-ERM-RALTO TREATMENT PLANT EXPANSION\DWG\TREATMENT PLANT\2013175.00 RALTO-SHT27 C-22 GENERAL CIVIL DETAILS.DWG

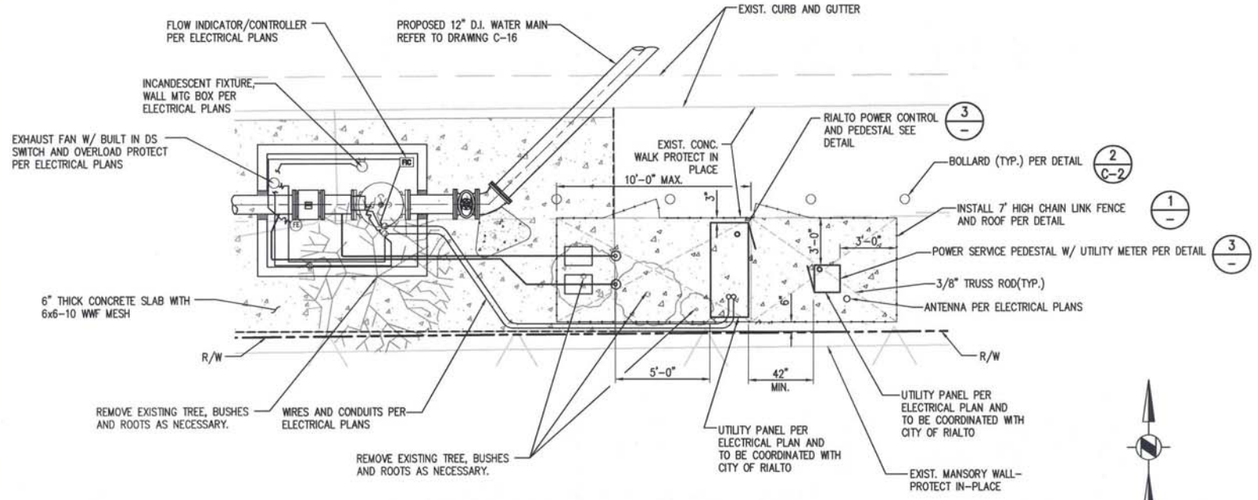

ELECTRICAL PANEL ENCLOSURE DETAIL (2/C-17)

NOT TO SCALE

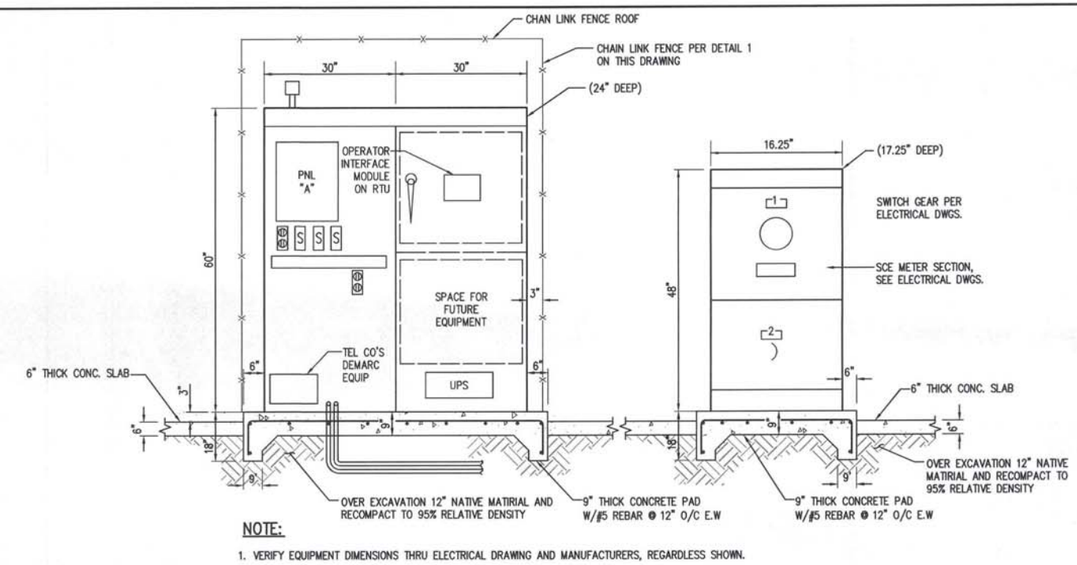

NOTE:

1. VERIFY EQUIPMENT DIMENSIONS THRU ELECTRICAL DRAWING AND MANUFACTURERS, REGARDLESS SHOWN.

POWER/CONTROL AND SERVICE PEDESTAL (3/-)

NOT TO SCALE

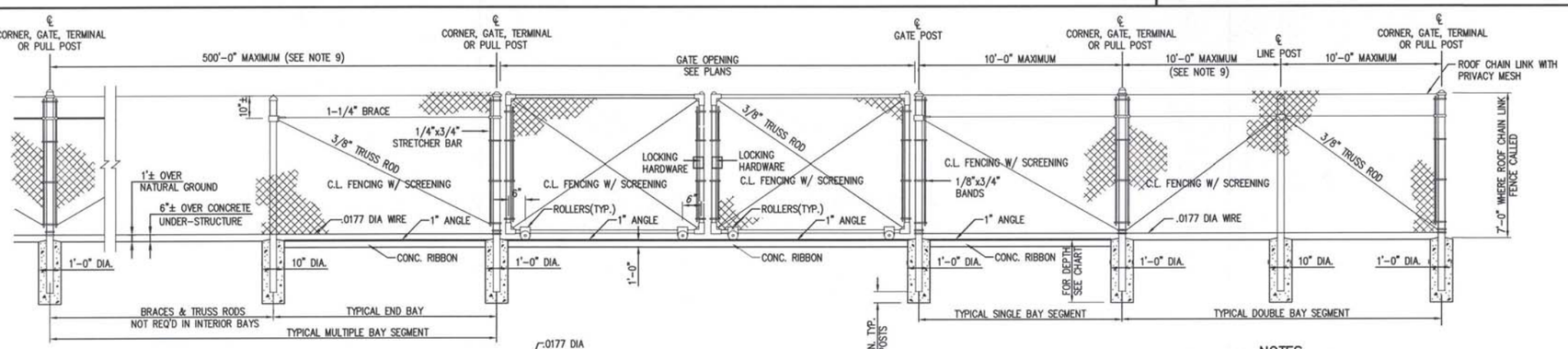

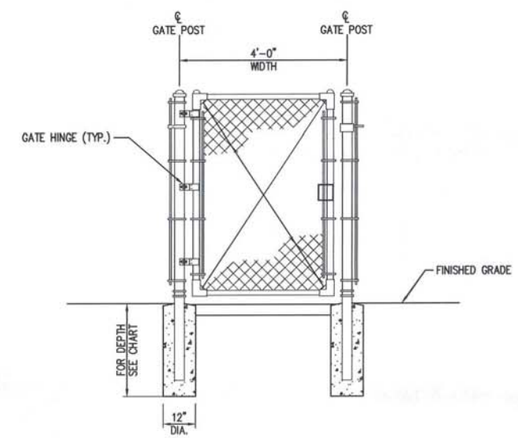

SINGLE LEAF SWING GATE DETAIL

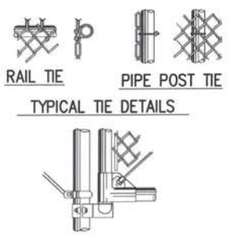

TYPICAL TIE DETAILS

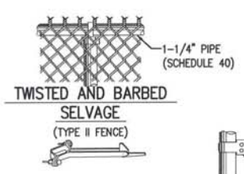

TWISTED AND BARBED SELVAGE

(TYPE II FENCE)

GATE HOLD BACK

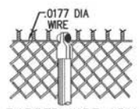

BARBED WIRE ARM AND TENSION WIRE

(SHOWING TYPICAL TENSION WIRE TIE) (TYPE I FENCE)

BOTTOM GATE HINGE AND GATE DETAILS

(NOTE: OPTIONAL WELDED OR RIVETED CONSTRUCTION)

TOP GATE HINGE

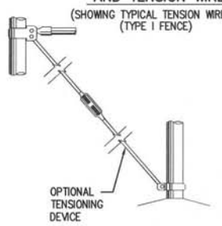

BRACE AND TRUSS CONNECTIONS

GATES			
GATE POSTS AND GATE FRAMES			
HEIGHT	GATE OPENING	GATE POST	GATE FRAME
UNDER 6 FEET	SINGLE TO 6' OR DOUBLE TO 12'	2"	1"
	SINGLE OVER 6' TO 8' OR DOUBLE OVER 12' TO 16'	2-1/2"	1-1/2"
	SINGLE OVER 8' TO 12' OR DOUBLE 16' TO 24'	3-1/2"	
6 FEET AND OVER	SINGLE TO 6' OR DOUBLE TO 12'	2-1/2"	1-1/2"
	SINGLE OVER 6' TO 13' OR DOUBLE OVER 12' TO 24'	3-1/2"	
	SINGLE OVER 13' TO 18' OR DOUBLE OVER 24' TO 36'	6"	
	SINGLE OVER 18' OR DOUBLE OVER 36'	8"	

GAGE OF FABRIC	HEIGHT OF FABRIC	DEPTH OF POSTS	LENGTH OF END, CORNER OR PULL POSTS	LENGTH OF LINE POSTS	SIZE OF POSTS					
					END, CORNER & PULL		LINE POSTS (MIN SIZE)			GATE POST
					PIPE OPTION	RECTANGULAR OPTION	PIPE OPTION	H POST OPTION		
9	7'	3'	10'	9'-8"	2-1/2"	3-1/2"	2"	1-7/8"x1-5/8"		SEE GATE POST TABLE
9	6'	3'	9'	8'-8"	2-1/2"	3-1/2"	2"	1-7/8"x1-5/8"		
9	5'	3'	8'	7'-8"	2"	3-1/2"	1-1/2"	1-5/16"x1-1/2"		
9	4'	2'	6'	5'-8"	2"	3-1/2"	1-1/2"	1-5/16"x1-1/2"		
9	3'	2'	5'	4'-8"	2"	3-1/2"	1-1/2"	1-5/16"x1-1/2"		

NOTES:

(1) MATERIALS, CONSTRUCTION AND WORKMANSHIP SHALL BE IN ACCORDANCE WITH THE WRITTEN SPECIFICATIONS.

(2) THE TYPE OF TOP SUPPORT IS SPECIFIED IN THE SPECIFICATIONS, TYPE I, TENSION WIRE AND TYPE II, TUBULAR RAIL.

(3) BARBED WIRE SHALL BE USED ONLY WHEN INDICATED ON THE PLANS AND IN THE SPECIFICATIONS.

(4) TWISTED AND BARBED SELVAGE, TOP AND BOTTOM, SHALL BE USED ON FENCES FIVE FEET OR GREATER IN HEIGHT.

(5) KNUCKLED SELVAGE ON TOP AND TWISTED AND BARBED SELVAGE ON BOTTOM SHALL BE USED ON FENCES LESS THAN FIVE FEET IN HEIGHT.

(6) ALL STEEL PIPE MEMBERS SHALL CONFORM TO THE REQUIREMENTS OF ASTM DESIGNATION A-120, SCHEDULE 40, HOT DIPPED ZINC COATED STEEL PIPE.

(7) OPTIONS EXERCISED SHALL BE UNIFORM THROUGHOUT THE PROJECT.

(8) LINE POSTS SHALL BE LOCATED AT EQUAL SPACING FOR EACH SEGMENT WITH MAXIMUM SPACING AS FOLLOWS:

A. TANGENT SECTIONS TO 500 FEET RADIUS – NOT MORE THAN 10 FEET.
B. UNDER 500 FEET RADIUS TO 200 FEET RADIUS – NOT MORE THAN 8 FEET.
C. UNDER 200 FEET RADIUS TO 100 FEET RADIUS – NOT MORE THAN 6 FEET.
D. UNDER 100 FEET RADIUS – NOT MORE THAN 5 FEET.

(9) THE MINIMUM HEIGHT OF FABRIC ON FENCES AND GATES SHALL BE 6 FEET.

(10) ALL CONCRETE SHALL HAVE A MINIMUM OF 5 SACKS OF CEMENT PER CUBIC YARD.

(11) FASTEN FABRIC TO TOP AND BOTTOM TENSION CABLE AT 24 INCH INTERVALS. FASTEN TO LINE POSTS AT 14 INCH INTERVALS.

CHAIN LINK FENCE DETAIL (1/C-2)

NOT TO SCALE

DIAL 811 DIGALERT

UNDERGROUND SERVICE ALERT

PLAY IT SAFE. DIAL BEFORE YOU DIG!

AT LEAST TWO WORKING DAYS PRIOR TO EXCAVATING

REGISTERED PROFESSIONAL ENGINEER CHRISTOPHER SHEM HAWES Exp. 6/30/2014 No. 69579 CIVIL STATE OF CALIFORNIA 6/18/14

PLANS PREPARED BY:

General Civil, Transportation, Municipal, Water and Wastewater Engineering, Planning, Construction Management, and Surveying

118 West Lime Avenue
Monrovia, Ca. 91016
Phone: (626) 357-0588
Fax: (626) 303-7957

CIVILTEC engineering inc.
Monrovia • Prescott • Phoenix

ERM

REV	DATE	REVISION	APPR'D	REV BY

GROUNDWATER EXTRACTION AND TREATMENT SYSTEM COMBINED REMEDY SOURCE AREA OPERABLE UNIT, ROCKETS, FIREWORKS, AND FLARES SUPERFUND SITE

SCALE	AS SHOWN	DESIGNED BY	JM/BS/BD/CD	DRAWN BY	JM/BS/CD	DRAWING NUMBER	REV
DATE	SCALE	CHECKED	BD/CSH	APPROVED		JOB NUMBER 2013175.00	SHEET 28

GENERAL CIVIL DETAILS

DISCIPLINE NO. C-23

ENVIRONMENTAL RESOURCES MANAGEMENT

X:\2013\2013175.00-ERM-RIALTO TREATMENT PLANT EXPANSION\DWG\TREATMENT PLANT\2013175.00 RIALTO-SHT28 C-23 GENERAL CIVIL DETAILS.DWG

STRUCTURAL NOTES

GENERAL NOTES:

1. THESE NOTES APPLY TO ALL DRAWING SHEETS UNLESS NOTED OTHERWISE.
2. THE CONTRACTOR SHALL FIELD VERIFY ALL EXISTING DIMENSIONS, ELEVATIONS, AND SITE CONDITIONS BEFORE COMMENCING WORK (I.E. BEFORE DESIGN, FABRICATION, AND CONSTRUCTION) AND NOTIFY THE ENGINEERS IMMEDIATELY OF ANY VARIATION FROM THE PLANS FOR THE ENGINEERS EVALUATION. COORDINATION AND VERIFICATION OF DIMENSIONS AND LOCATION OF EMBEDDED ITEMS IS THE RESPONSIBILITY OF THE CONTRACTOR.
3. RESOLVE ANY CONFLICT ON THE CONTRACT DOCUMENTS WITH THE ENGINEER BEFORE PROCEEDING WITH WORK.
4. THE CONTRACTOR SHALL BE RESPONSIBLE TO PROTECT THE WORK SITE, PARTICULARLY, EXCAVATED AREAS, FROM FLOODING, PONDING, AN INUNDATION BY POOR OR IMPROPER SURFACE DRAINAGE. TEMPORARY PROVISIONS SHOULD BE MADE TO ADEQUATELY DIRECT SURFACE DRAINAGE FROM ALL SOURCES AWAY FROM AND OFF THE WORK SITE. ALSO
5. PROVIDE ADEQUATE SUMPS AND PUMPS TO HANDLE ANY FLOW INTO THE EXCAVATIONS.
6. TEMPORARY EXCAVATIONS SHOULD BE SLOPED OR BRACED IN ACCORDANCE WITH CAL-OSHA REGULATIONS.
7. ALL MATERIAL AND WORKMANSHIP SHALL CONFORM TO THE REQUIREMENTS OF THE LATEST EDITION OF THE CALIFORNIA BUILDING CODE (CBC 2013), OTHER LOCAL CODES HAVING JURISDICTION, AND ALL GOVERNING ORDINANCES.
8. IF CONSTRUCTION MATERIAL IS PLACED ON FRAMED FLOORS, ROOFS, ETC., IT SHALL BE SPREAD OUT. THE LOAD FROM SUCH CONSTRUCTION MATERIAL SHALL NOT EXCEED THE DESIGN LIVE LOAD SPECIFIED IN THE UNIFORM BUILDING CODE UNLESS OTHERWISE NOTED.
9. EPOXY USED FOR DRILLED ANCHORS AND REINFORCING STEEL SHALL BE SET EPOXY-TIE ADHESIVE (SET ADHESIVE SET 1.7 AND SET-PAC) AS MANUFACTURED BY SIMPSON STRONG-TIE CONNECTORS OR EQUAL. DEPUTY INSPECTOR IS REQUIRED FOR ALL EPOXY & EXPENSION ANCHORS WHILE DRILLING INTO EXISTING CONCRETE, THE CONTRACTOR SHALL TAKE APPROPRIATE MEASURES TO ENSURE THAT THE EXISTING REINFORCING STEEL IS NOT DAMAGED OR CUT.
10. CONTRACTORS RESPONSIBLE FOR THE CONSTRUCTION OF A WIND OR SEISMIC FORCE RESISTING SYSTEM/COMPONENT LISTED IN THE "STATEMENT OF SPECIAL INSPECTION" SHALL SUBMIT A WRITTEN STATEMENT OF RESPONSIBILITY TO THE LOCAL INSPECTION AUTHORITY AND THE OWNER PRIOR TO THE COMMENCEMENT OF WORK ON SUCH SYSTEM OR COMPONENT PER SEC. 1706.1

CONCRETE

1. CONCRETE STRENGTHS AT 28 DAYS SHALL BE MINIMUM f'c AS FOLLOWS:
   CONCRETE NOTE APPLIES TO UNLISTED CONCRETE MIX. DESIGNS

CONCRETE USE (ALL CONSTRUCTION)	STRENGTH (psi) AT 28 DAYS	SLUMP	AGG. SIZE (MAXIMUM)
SLABS ON GRADE FOR TREATMENT VESSELS	4000	4 1/2"	1"
SIDEWALKS AND DRIVEWAYS ON GRADE AND CURBS	2500	4 1/2"	1"
CONT. FOOTINGS AND BLDG PADS	3250	4 1/2"	1 1/2"

   SUBMIT MATERIALS DATA AND MIX DESIGN FOR REVIEW.
2. ALL CEMENT SHALL CONFORM TO ASTM C-150, TYPE II, UNLESS ALKALINE SOILS ARE PRESENT. AGGREGATES SHALL CONFORM TO ASTM C-33 WITH PROVEN SHRINKAGE CHARACTERISTICS OF LESS THAN .005. ALL CONCRETE UNLESS OTHERWISE NOTED SHALL BE REGULAR WEIGHT HARD ROCK TYPE (150 #/CF). CONCRETE USED FOR THE TREATMENT PAD SHALL BE AIR ENTRAINED.
3. CONCRETE SHALL BE MAINTAINED IN A MOIST CONDITION FOR A MINIMUM OF FIVE (5) DAYS AFTER PLACEMENT. APPROVED CURING COMPOUNDS MAY BE USED IN LIEU OF MOIST CURING.
4. SLEEVES NOT SPECIFICALLY SHOWN ON THE DRAWINGS SHALL BE LOCATED BY THE TRADES INVOLVED AND SHALL BE REVIEWED BY THE ENGINEER BEFORE CONCRETE IS POURED, CHECK WITH ALL TRADES TO INSURE PROPER PLACEMENT OF OPENING, SLEEVES, CURBS, CONDUITS, ETC., RELATING TO THE WORK.
5. ALL INSERTS AND OTHER ITEMS TO BE CAST IN CONCRETE SUCH AS REINFORCING BARS, DOWELS, BOLTS, ANCHORS, PIPES, SLEEVES, ETC., SHALL BE SECURELY POSITIONED IN THE FORMS BEFORE PLACING THE CONCRETE.
6. CONSTRUCTION JOINTS SHALL HAVE THE ENTIRE SURFACE REMOVED TO EXPOSE CLEAN AGGREGATE SOLIDITY EMBEDDED. THE LOCATIONS OF ALL CONSTRUCTION JOINTS IN ALL SLABS, BEAMS, AND SHEAR WALLS OTHER THAN THOSE DETAILED OR SPECIFIED SHALL BE REVIEWED BY THE ENGINEER.
7. THE FOLLOWING SPECIAL INSPECTIONS PER 2013 CALIFORNIA BUILDING CODE SECTION 1704 A.3. SHALL BE PERFORMED WHEN THE CONCRETE DESIGN STRENGTH IS GREATER THAN f'c = 2,500 PSI:
   a. REINFORCEMENT b. CONCRETE PLACING c. CONCRETE STRENGTH
8. DRYPACK SHALL BE COMPOSED OF ONE PART PORTLAND CEMENT TO NOT MORE THAN THREE PARTS SAND. DRYPACK OR NON-SHRINK GROUT SHALL HAVE MIN. ULTIMATE COMPRESSIVE STRENGTH OF 6000 PSI AT 28 DAYS.
9. VIBRATION OF CONCRETE SHALL BE IN ACCORDANCE WITH THE GENERAL PROVISIONS OUTLINED IN PORTLAND CEMENT ASSOCIATION SPECIFICATIONS ST26.
10. REBAR COVERAGE SHALL BE MINIMUM AS FOLLOWS:

3"	WHERE CONCRETE IS DEPOSITED DIRECTLY AGAINST GROUND, EXCEPT SLABS ON GRADE.
2"	WHERE CONCRETE IS EXPOSED TO GROUND BUT PLACED IN FORMS.
1 1/2"	FOR MAIN BARS IN BEAMS, TIED COLUMNS, AND TIED BARS IN WALLS.
1 1/2"	TO TIES IN COLUMNS.
1 1/2"	FOR WALL BARS TO WEATHER SURFACE: 1" TO PROTECTED SURFACES.
1 1/2"	FOR BARS IN SLABS ON GRADE.
1"	FOR BARS IN SUSPENDED SLABS.

DIAL 811
DIGALERT
UNDERGROUND SERVICE ALERT
PLAY IT SAFE. DIAL BEFORE YOU DIG!
AT LEAST TWO WORKING DAYS PRIOR TO EXCAVATING

CONCRETE (CONTINUE)

11. HARDROCK AGGREGATES SHALL CONFORM TO ASTM C33. MAXIMUM SIZE OF AGGREGATES SHALL BE 1 1/2 INCH FOR FOOTING, CAISSONS, AND GRADE BEAMS, AND 1-INCH FOR ALL OTHER WORK.
12. LIGHTWEIGHT AGGREGATE SHALL CONFORM TO ASTM C330 AND SHALL HAVE A MAXIMUM SIZE OF 3/4 INCH.
13. ONLY ONE GRADE OF CONCRETE SHALL BE POURED AT THE JOB AT ONE TIME.
14. A MIX THAT PRODUCES THE LOWEST SLUMP COMPATIBLE WITH PROPER PLACEMENT SHALL BE USED (4 1/2 INCHES MAXIMUM SLUMP UNLESS APPROVED BY THE PROJECT MANAGER).
15. FORMS FOR CONCRETE STRUCTURAL MEMBERS (SLABS, BEAMS, FOUNDATIONS, ETC) SHALL NOT BE STRIPPED UNTIL THE CONCRETE HAS REACHED ITS REQUIRED STRENGTH IN ACCORDANCE WITH ACI CODE REQUIREMENTS.
16. ALL SLAB ON GRADE SHALL BE PROTECTED WITH A MOISTURE BARRIER.
17. LEAN CONCRETE (LIGHT WEIGHT CONCRETE) SHALL HAVE OVEN DRY DENSITY OF APPROXIMATELY 60 TO 80 PCF. 28-DAY COMPRESSIVE STRENGTH SHALL BE A MINIMUM OF 800 PSI.

REINFORCING STEEL

1. DESIGN, DETAILING, FABRICATION, PLACEMENT AND SPECIAL INSPECTION SHALL BE IN ACCORDANCE WITH ACI CODES AND MANUALS (318 AND 315) AND CBC, 2010 EDITION.
2. STEEL REINFORCEMENT SHALL BE NEW DEFORMED BILLET STEEL, MEETING ASTM STANDARD "A" 615-68; GRADE 60 KSI FOR #4 AND LARGER BARS, EXCEPT AS NOTED; GRADE 40 KSI FOR #3 AND SMALLER BARS. GRADE 60 KSI REBARS SHALL NOT BE BENT IN FIELD AFTER PLACING.
3. ALL SPLICES IN CONCRETE SHALL BE ACCORDING TO ACI 318, CLASS C, OR 40 BAR DIAMETERS (U.N.O.)
4. ALL REINFORCING SHALL BE SECURELY TIED AND BRACED IN PLACE PRIOR TO POURING CONC. USE ONLY PVC CHAIRS, METAL OR CEMENT CHAIRS WILL NOT BE ACCEPTED.
5. WIRE FABRIC: WELDED WIRE FABRIC (WWM OR WWF) SHALL CONFORM TO ASTM A-82 AND A-185. LAP 3 SPACES OR 18" MINIMUM.
6. DOUBLE LAYER WELDED WIRE FABRIC SHALL BE INSTALLED WITH AN OFFSET EQUAL TO 1/2 SPACE IN BOTH DIRECTION.
7. REINFORCING FOR GRADE BEAMS SHALL BE ASTM A706

STRUCTURAL STEEL

1. ALL STRUCTURAL AND MISCELLANEOUS STEEL SHALL CONFORM TO ASTM A-992 (A-50 FOR STEEL FRAMES AND A-36 FOR OTHER STEEL, UNO) AND SHALL BE FABRICATED AND ERECTED IN ACCORDANCE WITH THE AISC SPECIFICATIONS FOR THE DESIGN, FABRICATION AND ERECTION OF STRUCTURAL STEEL FOR BUILDINGS, LATEST EDITION.
2. HOLES FOR BOLTS IN STRUCTURAL STEEL SHALL BE DRILLED OR PUNCHED. BURNING OF HOLES SHALL NOT BE PERMITTED.
3. BOLTS SHALL CONFORM TO ASTM F1554 GRADE 36, U.N.O. HOLES FOR BOLTS SHALL NOT BE MORE THAN 1/16" LARGER IN DIAMETER THAN THE BOLT.
4. ALL WELDING SHALL BE DONE BY ELECTRIC ARC PROCESS WITH E70XX ELECTRODES.
5. ALL WELDING SHALL COMPLY WITH AWS SPECIFICATIONS AND IS TO BE DONE BY WELDERS CERTIFIED FOR THE TYPE OF WELDING TO BE PERFORMED.
6. CONTINUOUS INSPECTION BY A DEPUTY WELDING INSPECTOR IS REQUIRED FOR ALL FIELD WELDING PER 2010 CALIFORNIA BUILDING CODE SECTION 1704 A.3.

MASONRY

1. REFER TO BUILDING SPECIFICATIONS AND PLANS FOR ANY ADDITIONAL OR SPECIAL MASONRY REQUIREMENT.
2. LEVEL 2 SPECIAL INSPECTION IS REQUIRED FOR MASONRY CONSTRUCTION.
3. MORTAR SHALL BE TYPE S, CONFORMING TO A.S.T.M. C-270 MINIMUM COMPRESSIVE STRENGTH f'c = 1800 PSI AT 28 DAYS. MIX TO BE 1 PART PORTLAND CEMENT, 1/4 TO 1/2 PART HYDRATED LIME OR LIME PUTTY, 4 PARTS SAND (BY VOLUME). IF PLASTIC TYPE CEMENT IS USED OMIT LIME PUTTY. THE TOTAL CLAY CONTENTS, INCLUDING THAT IN THE SAND, SHALL NOT EXCEED 2% OF THE SAND CONTENT OR 6% OF THE CEMENT CONTENT.
4. GROUT SHALL CONFORM TO A.S.T.M. C-476. MINIMUM COMPRESSIVE STRENGTH f'c= 2000 PSI AT 28 DAYS. MIX TO BE 1 PART CEMENT, 3 PARTS SAND. 1/10 PART HYDRATED LIME OR LIME PUTTY, 2 PARTS PEA GRAVEL, GROUT SHALL BE COMPOSED OF NOT LESS THAN 7 SACKS OF CEMENT PER CUBIC YARD, FLUID CONSISTENCY, FOR POURING WITHOUT SEGREGATION OF CONSTITUENT PARTS. MINIMUM GROUT SPACE SHALL BE 3 INCHES IN LEAST DIMENSION. MIX SHALL BE 1 PART PORTLAND CEMENT TO NOT MORE THAN 3 PARTS PER GRAVEL, 3/8 INCH MAXIMUM SIZE COARSE AGGREGATE. GROUT FILL USING COARSER AGGREGATE MAY BE USED IF MIX IS PROPERLY DESIGNED BY SUPPLIER AND REVIEWED BY THE ENGINEER.
6. CONSTRUCTION JOINTS: WHEN GROUTING IS STOPPED FOR A PERIOD OF ONE HOUR OR LONGER, FORM HORIZONTAL CONSTRUCTION JOINTS BY STOPPING THE GROUT POUR 1-1/2 INCHES MINIMUM BELOW THE UPPERMOST UNIT.

CONCRETE ANCHORS

1. EXPANSION ANCHOR EMBEDMENTS SHALL BE AS SHOWN ON PLANS, DETAILS, AND ICC-ES APPROVALS, WHICHEVER IS HIGHER. EXPANSION ANCHORS REQUIRE SPECIAL INSPECTION. THE ANCHORS MAY BE ONE OF THE FOLLOWING OR THEIR ICC-ES EQUIVALENTS:

   ITW RAMSET/RED HEAD TRUBOLT + WEDGE ANCHOR . . . . . RR # 2748 ESR # 2427
   HILTI KWIK-BOLT TZ. . . . . RR # 25701 ESR # 1917

2. EPOXY ANCHOR EMBEDMENTS SHALL BE AS SHOWN ON PLANS, DETAILS, ICC-ES ESR APPROVALS, WHICHEVER IS HIGHER. ALL EPOXY ANCHORS REQUIRE SPECIAL INSPECTION. EPOXY ANCHORS MAY BE ONE OF THE FOLLOWING:

   HILTI HIT-RE 500 SD ADHESIVE . . . . . RR # 25700 ESR # 2322
   SIMPSON SET -XP . . . . . RR # 25744 ESR # 2508

   THREADED RODS USED FOR EPOXY ANCHORS SHALL BE ZINC COATED ASTM F1554 GRADE 36 (OLD A307 GRADE C) OR ASTM A572 GRADE 50, FOR TYPICAL ANCHORS, AND ASTM A193, GRADE B7 FOR HOLD-DOWNS AND STEEL FRAME COLUMN BASES.
3. VERIFY THE APPROVAL STATUS OF SELECTED ANCHORS AND PROVIDE A RECENT COPY OF THE APPROVALS FOR ENGINEER'S REVIEW AND INSPECTOR'S USE.
4. BOLTS EMBEDDED IN CONCRETE TO BE ASTM F1554 GRADE 36. ANCHOR BOLT EMBEDMENT LENGTHS IN CONCRETE SHALL BE AS FOLLOWS:

SIZE OF BOLT	LENGTH OF EMBEDMENT
1/2"	4"
5/8"	5"
3/4" AND 7/8"	6"
1"	7"
1-1/8" AND UP	8"

5. ALL CAST-IN-PLACE, POST-INSTALLED ANCHORS, AND ANCHORS INSTALLED IN CONCRETE REQUIRE SPECIAL INSPECTION.

OCCUPANCY CATEGORY/SEISMIC DESIGN CATEGORY: IV

CODES: 2013, CBC, CEC, CPC, CFC

OCCUPANCY = GROUP U
CONSTRUCTION TYPE = VB
SPRINKLER = UNSPRINKLED
OCCUPANT LOAD = 1 EACH
FLOOR AREA = UV BUILDING 112 SF
WELL BUILDING 432 SF
ROOF LIVE LOAD = 20 PSF

SEISMIC

SITE CLASS :D
Ss = 1.975
S1 = 0.705
Fa = 1.00
I = 1.25
Sms = 1.975
Sds = 1.305

WIND

BASIC WIND SPEED V = 90 MPH
IMPORTANCE FACTOR I = 1.15
EXPOSURE CATEGORY: B

NOTE:

CONTRACTOR TO SUBMIT COMPLETE STRUCTURAL PLANS AND CALCULATIONS FOR THE PRECAST BUILDING TO THE BUILDING DEPARTMENT FOR REVIEW BEFORE CONSTRUCTION OF ANY BUILDING.

REGISTERED PROFESSIONAL ENGINEER CHRISTOPHER SHEM HAWES Exp. 6/30/2014 No. 69578 CIVIL STATE OF CALIFORNIA
6/18/14

PLANS PREPARED BY:
General Civil, Transportation, Municipal, Water and Wastewater Engineering, Planning, Construction Management, and Surveying
118 West Lime Avenue
Monrovia, Ca. 91016
Phone: (626) 357-0588
Fax: (626) 303-7957
CIVILTEC engineering inc.
Monrovia • Prescott • Phoenix
ERM

REV	DATE	REVISION	APPR'D	REV BY

GROUNDWATER EXTRACTION AND TREATMENT SYSTEM COMBINED REMEDY SOURCE AREA OPERABLE UNIT, ROCKETS, FIREWORKS, AND FLARES SUPERFUND SITE

SCALE	AS SHOWN	DESIGNED BY	JM/BS/BD/CD	DRAWN BY	JM/BS/CD	DRAWING NUMBER	
DATE	SCALE	CHECKED	BD/CSH	APPROVED		JOB NUMBER	2013175.00

REV
SHEET 29
DISCIPLINE NO. S-1

STRUCTURAL NOTES

ENVIRONMENTAL RESOURCES MANAGEMENT

X:\2013\2013175.00-ERM-RIALTO TREATMENT PLANT EXPANSION\DWG\TREATMENT PLANT\2013175.00 RIALTO-SHT29 S-1 STRUCTURAL NOTES.DWG (06-1

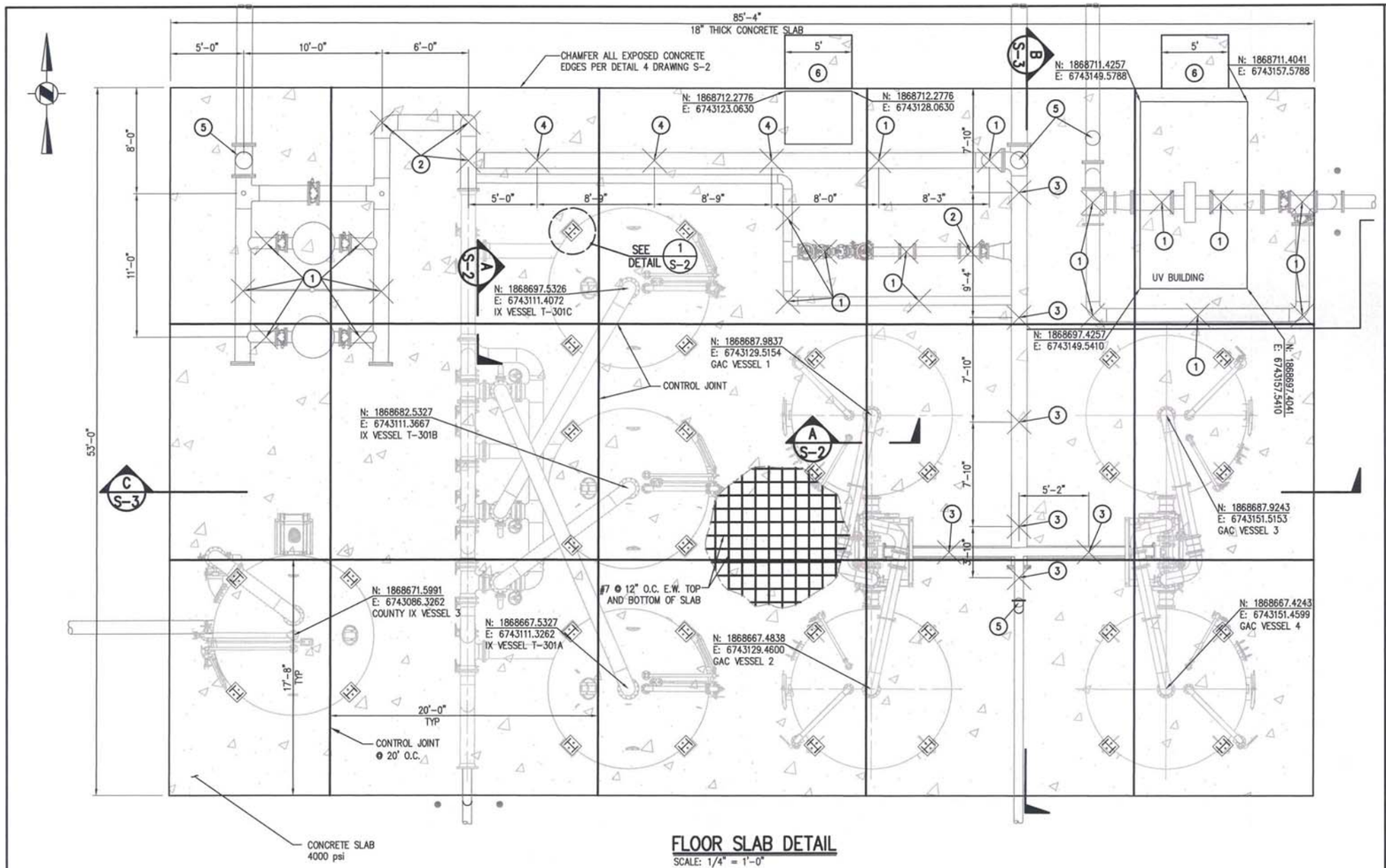

FLOOR SLAB DETAIL

SCALE: 1/4" = 1'-0"

NOTES FOR CONTRACTOR:

1. FIELD VERIFY ANCHOR BOLT SIZE AND LOCATION WITH EQUIPMENT VENDORS PRIOR TO INSTALLATION.
2. ALL ANCHORS SHALL BE 1" ASTM F593 STAINLESS STEEL.
3. DEPUTY INSPECTION IS REQUIRED FOR THE INSTALLATION OF EPOXY ANCHORS.
4. PROVIDE SEISMIC CALCULATION FOR ENGINEER APPROVAL.

CONSTRUCTION NOTES: (THIS SHEET ONLY)

1. INSTALL ADJUSTABLE PIPE SUPPORT PER DETAIL 4 DRAWING M-6.
2. INSTALL PIPE ELBOW SUPPORT PER DETAIL 1 DRAWING M-3.
3. INSTALL PIPE RACK SUPPORT PER SECTION B DRAWING M-2.
4. INSTALL PIPE RACK SUPPORT PER SECTION L DRAWING M-3.
5. SLAB PENETRATION PER DETAIL 2 DRAWING S-2.
6. INSTALL LANDING PER DETAIL A DRAWING S-4.

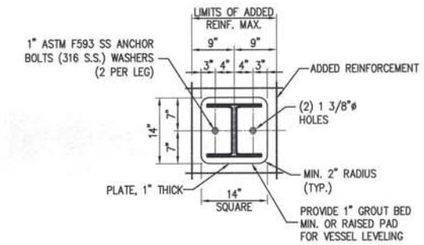

BASE PLATE PLAN

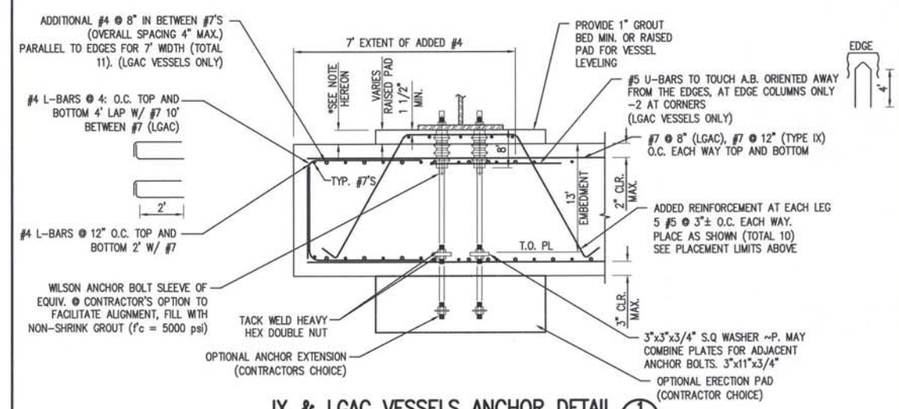

IX & LGAC VESSELS ANCHOR DETAIL 1/S-2

NOT TO SCALE

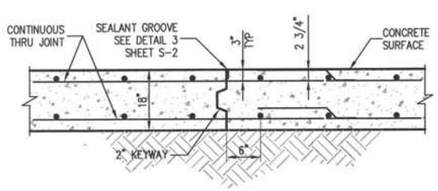

SLAB CONTROL JOINT A/S-2

NOT TO SCALE

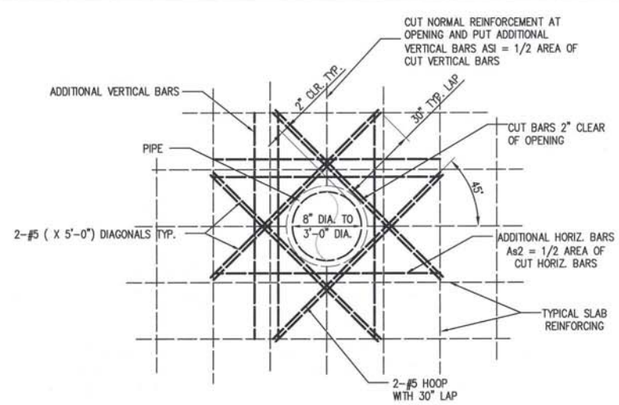

NOTES:

ADDITIONAL BARS TO FIT WITHIN A DISTANCE EQUAL TO THICKNESS OF WALL OR SLAB FROM OPENING. INCREASE SIZE OF REBARS IF NECESSARY TO FIT WITHIN THIS DISTANCE.

(FOR REINFORCING ONLY)

SLAB PENETRATION DETAIL 2/S-2

NOT TO SCALE

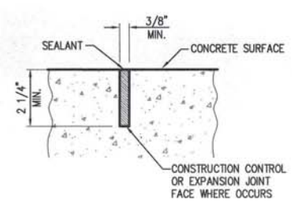

SEALANT GROOVE 3/S-2

NOT TO SCALE

ALL EXPOSED CONCRETE CORNERS TO BE CHAMFERED

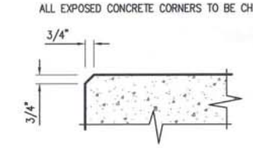

TYPICAL CONCRETE CHAMFER DETAIL 4/S-2

NOT TO SCALE

DIAL 811 DIGALERT

UNDERGROUND SERVICE ALERT

PLAY IT SAFE. DIAL BEFORE YOU DIG!

AT LEAST TWO WORKING DAYS PRIOR TO EXCAVATING

REGISTERED PROFESSIONAL ENGINEER CHRISTOPHER SHEM HAWES Exp. 6/30/2014 No. 69576 CIVIL STATE OF CALIFORNIA 6/10/14

PLANS PREPARED BY:

General Civil, Transportation, Municipal, Water and Wastewater Engineering, Planning, Construction Management, and Surveying

118 West Lime Avenue
Monrovia, Ca. 91016
Phone: (626) 357-0588
Fax: (626) 303-7957

CIVILTEC engineering inc.
Monrovia • Prescott • Phoenix

ERM

REV	DATE	REVISION	APPR'D	REV BY

GROUNDWATER EXTRACTION AND TREATMENT SYSTEM COMBINED REMEDY SOURCE AREA OPERABLE UNIT, ROCKETS, FIREWORKS, AND FLARES SUPERFUND SITE

SCALE	AS SHOWN	DESIGNED BY	JM/BS/BD/CD	DRAWN BY	JM/BS/CD	DRAWING NUMBER	
DATE	SCALE	CHECKED	BD/CSH	APPROVED		JOB NUMBER	2013175.00

REV

SHEET 30

DISCIPLINE NO. S-2

TREATMENT PLANT PAD
STRUCTURAL PLAN AND DETAILS

ENVIRONMENTAL RESOURCES MANAGEMENT

X:\2013\2013175.00-ERM-RIALTO_TREATMENT_PLANT_EXPANSION\DWG\TREATMENT PLANT\2013175.00 RIALTO-SHT30 S-2 TREATMENT PAD STRUCTURAL P

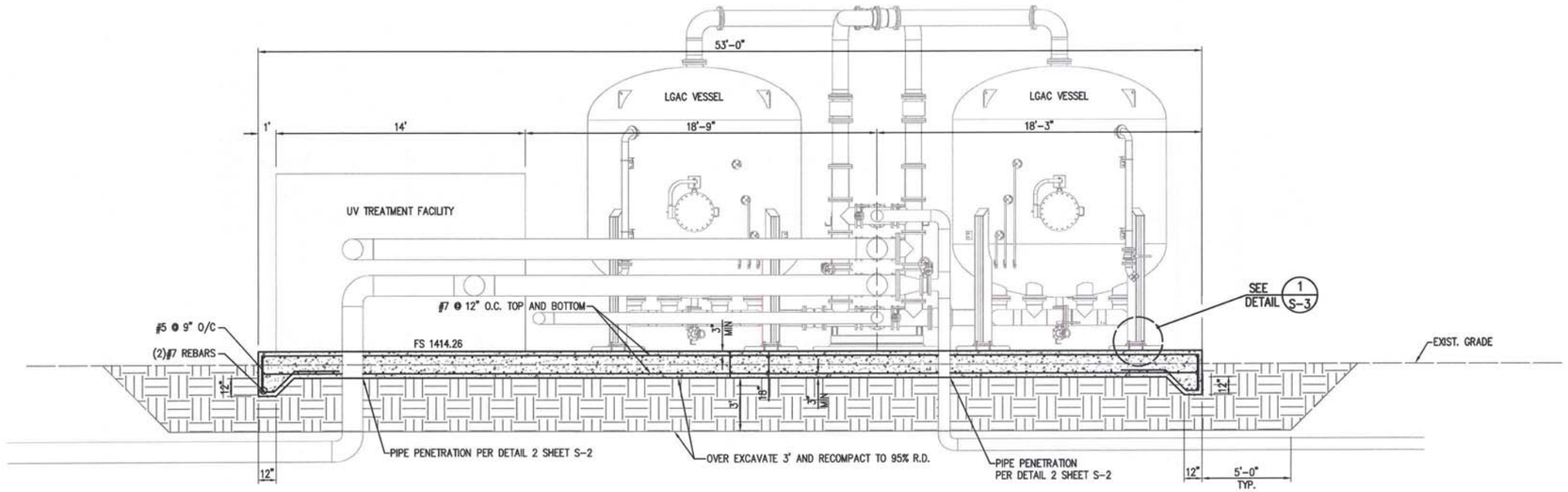

SECTION B S-2
SCALE: 1/4" = 1'-0"

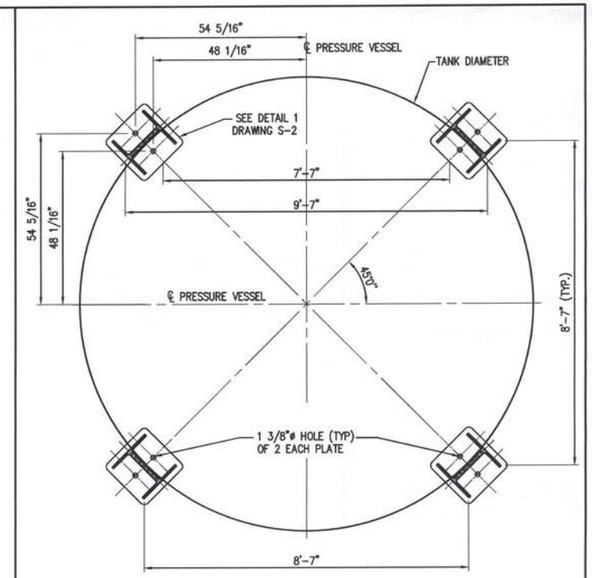

VESSEL COLUMN ANCHOR DETAIL 1 S-3
1/2"=1' SCALE

NOTES:

1. FIELD VERIFY ANCHOR BOLT SIZE AND LOCATION WITH EQUIPMENT VENDORS PRIOR TO INSTALLATION.
2. DEPUTY INSPECTION IS REQUIRED FOR THE INSTALLATION OF ANCHORS.

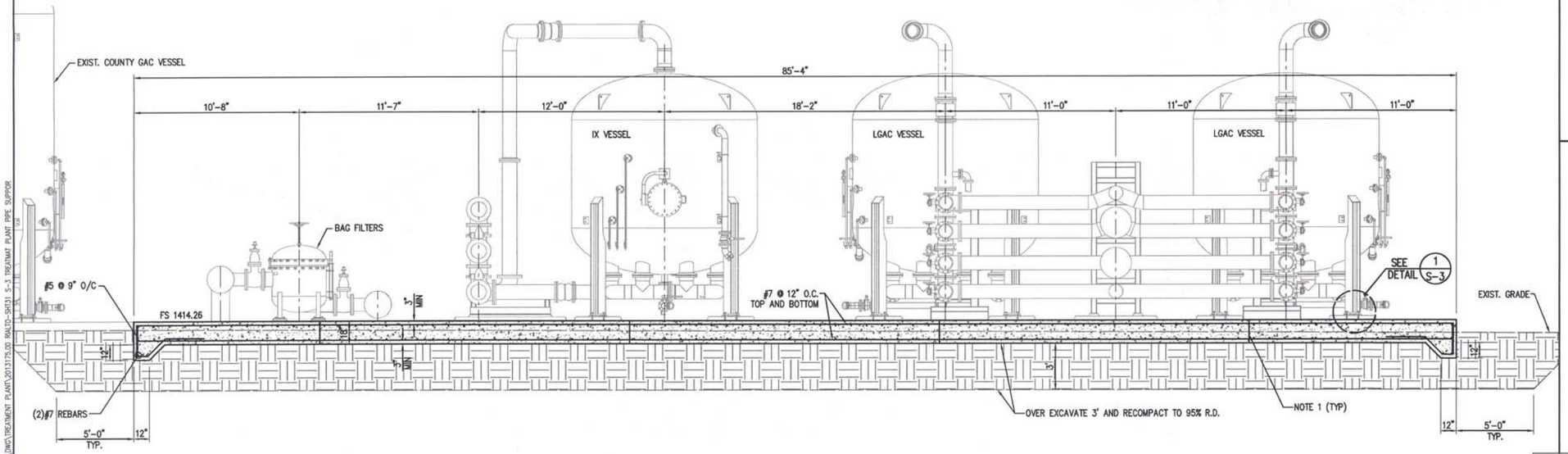

SECTION C S-2
SCALE: 1/4" = 1'-0"

NOTES:

1. SAWCUT 2 1/4" DEEP WEAKENED PLANE JOINT, CLEAN OUT, AND FILL WITH SIKA 2C SEALANT. SEE DETAIL 3 DRAWING S-2.
2. REINFORCEMENT LAPPING PER DETAIL 4 OF DRAWING S-10.
3. REQUIRED BAR BENDING SHALL BE PER DETAIL 3 OF DRAWING S-10.
4. IF A MONOLITHIC SLAB IS NOT POURED, ALL CONTROL JOINTS SHALL BE PER SECTION "A" SHEET S-2.

REV	DATE	REVISION	APPR'D	REV BY

DIAL 811
DIGALERT
UNDERGROUND SERVICE ALERT
PLAY IT SAFE. DIAL BEFORE YOU DIG!
AT LEAST TWO WORKING DAYS PRIOR TO EXCAVATING

REGISTERED PROFESSIONAL ENGINEER
CHRISTOPHER SHEM HAWES
Exp. 6/30/2014
No. 69578
CIVIL
STATE OF CALIFORNIA
6/18/14

PLANS PREPARED BY:
General Civil, Transportation, Municipal, Water and Wastewater Engineering, Planning, Construction Management, and Surveying
118 West Lime Avenue
Monrovia, Ca. 91016
Phone: (626) 357-0588
Fax: (626) 303-7957
CIVILTEC engineering inc.
Monrovia • Prescott • Phoenix
ERM

GROUNDWATER EXTRACTION AND TREATMENT SYSTEM COMBINED REMEDY SOURCE AREA OPERABLE UNIT, ROCKETS, FIREWORKS, AND FLARES SUPERFUND SITE

SCALE	AS SHOWN	DESIGNED BY	JM/BS/BD/CD	DRAWN BY	JM/BS/CD	DRAWING NUMBER	
DATE	SCALE	CHECKED	BD/CSH	APPROVED		JOB NUMBER	2013175.00

REV
SHEET 31

TREATMENT PLANT PAD STRUCTURAL SECTIONS AND DETAILS

DISCIPLINE NO. S-3

ENVIRONMENTAL RESOURCES MANAGEMENT

X:\2013\2013175.00-ERM-RIALTO TREATMENT PLANT EXPANSION\DWG\TREATMENT PLANT\2013175.00 RIALTO-SHT31 S-3 TREATMENT PLANT PIPE SUPPOR

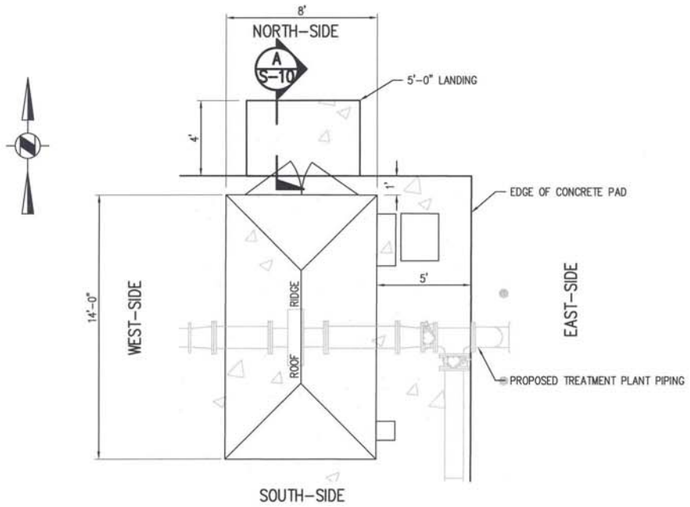

FLOOR PLAN

SCALE: 1/4"=1'-0"

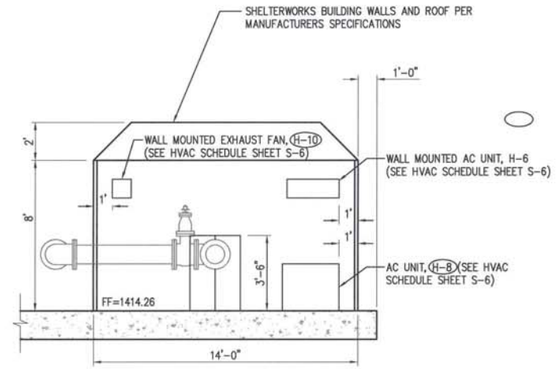

EAST-SIDE ELEVATION

SCALE: 1/4"=1'-0"

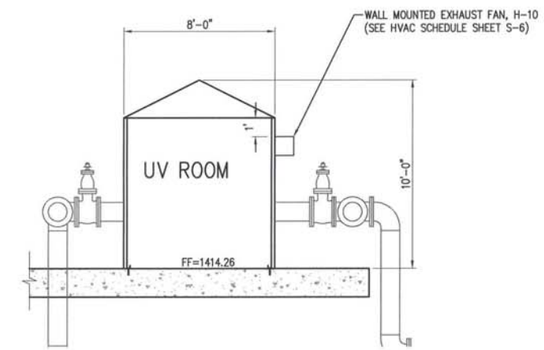

SOUTH-SIDE ELEVATION

SCALE: 1/4"=1'-0"

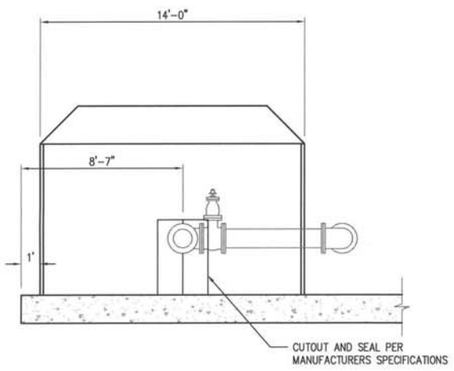

WEST-SIDE ELEVATION

SCALE: 1/4"=1'-0"

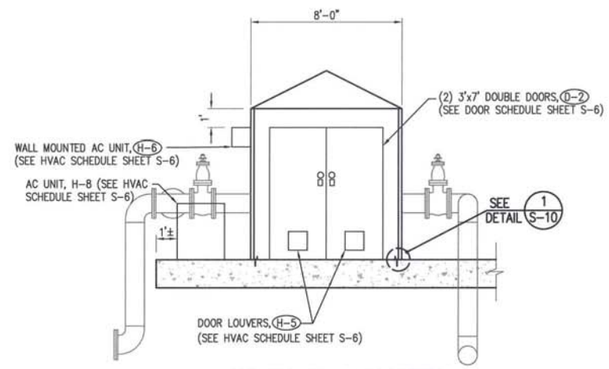

NORTH-SIDE ELEVATION

SCALE: 1/4"=1'-0"

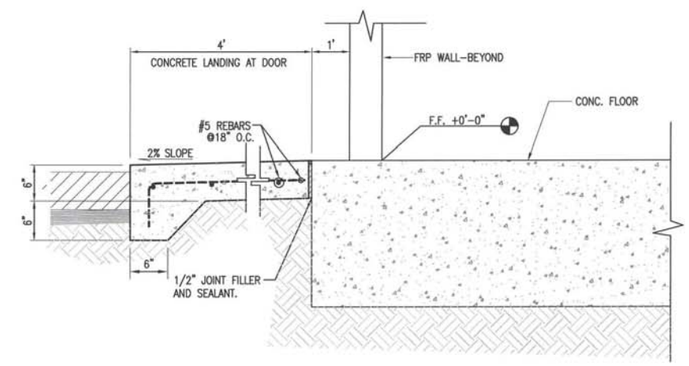

LANDING SECTION A S-10

SCALE: NOT TO SCALE

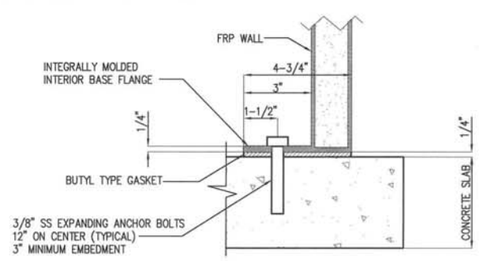

SLAB CONNECTION DETAIL 1 S-10

SCALE: NOT TO SCALE

NOTE:

CONTRACTOR TO SUBMIT COMPLETE STRUCTURAL PLANS AND CALCS FOR THE PREFORMED FRP BUILDING TO THE BUILDING DEPARTMENT FOR REVIEW BEFORE CONSTRUCTION OF THIS BUILDING

REV	DATE	REVISION	APPR'D	REV BY

DIAL 811 DIGALERT — UNDERGROUND SERVICE ALERT — PLAY IT SAFE. DIAL BEFORE YOU DIG! — AT LEAST TWO WORKING DAYS PRIOR TO EXCAVATING

REGISTERED PROFESSIONAL ENGINEER — CHRISTOPHER SHEM HAWES — Exp. 6/30/2014 — No. 69578 — CIVIL — STATE OF CALIFORNIA — 6/18/14

PLANS PREPARED BY:

General Civil, Transportation, Municipal, Water and Wastewater Engineering, Planning, Construction Management, and Surveying

118 West Lime Avenue
Monrovia, Ca. 91016
Phone: (626) 357-0588
Fax: (626) 303-7957

CIVILTEC engineering inc.
Monrovia • Prescott • Phoenix

ERM

GROUNDWATER EXTRACTION AND TREATMENT SYSTEM COMBINED REMEDY SOURCE AREA OPERABLE UNIT, ROCKETS, FIREWORKS, AND FLARES SUPERFUND SITE

SCALE	AS SHOWN	DESIGNED BY	JM/BS/BD/CD	DRAWNBY	JM/BS/CD	DRAWING NUMBER	
DATE	SCALE	CHECKED	BD/CSH	APPROVED		JOB NUMBER	2013175.00

REV

SHEET 32

DISCIPLINE NO. S-4

UV BUILDING FLOOR PLAN, ROOFING PLAN AND ELEVATIONS

ENVIRONMENTAL RESOURCES MANAGEMENT

X:\2013\2013175.00-ERM-RIALTO TREATMENT PLANT EXPANSION\DWG\TREATMENT PLANT\2013175.00 RIALTO-SHT32 S-4 UV BUILDING FLOOR PLAN.DWG

KEYNOTES:

1. 8" THICK CONCRETE SLAB WITH #5 @ 12"O.C.E.W.
2. #5 (6'-0"x6'-0") DIAGONAL AT EACH CORNER OF WELL PEDESTAL PER DETAIL 3/M-11
3. CONSTRUCTION JOINT, PER DETAIL 2/S-2
4. #5 (x 6'-0") DIAGONAL AT EACH SIDE OF PIPE IN FLOOR PENETRATION PER DETAIL 2/S-2
5. 6'-0" SQUARE CONCRETE PEDESTAL, PER DETAIL 3/M-11

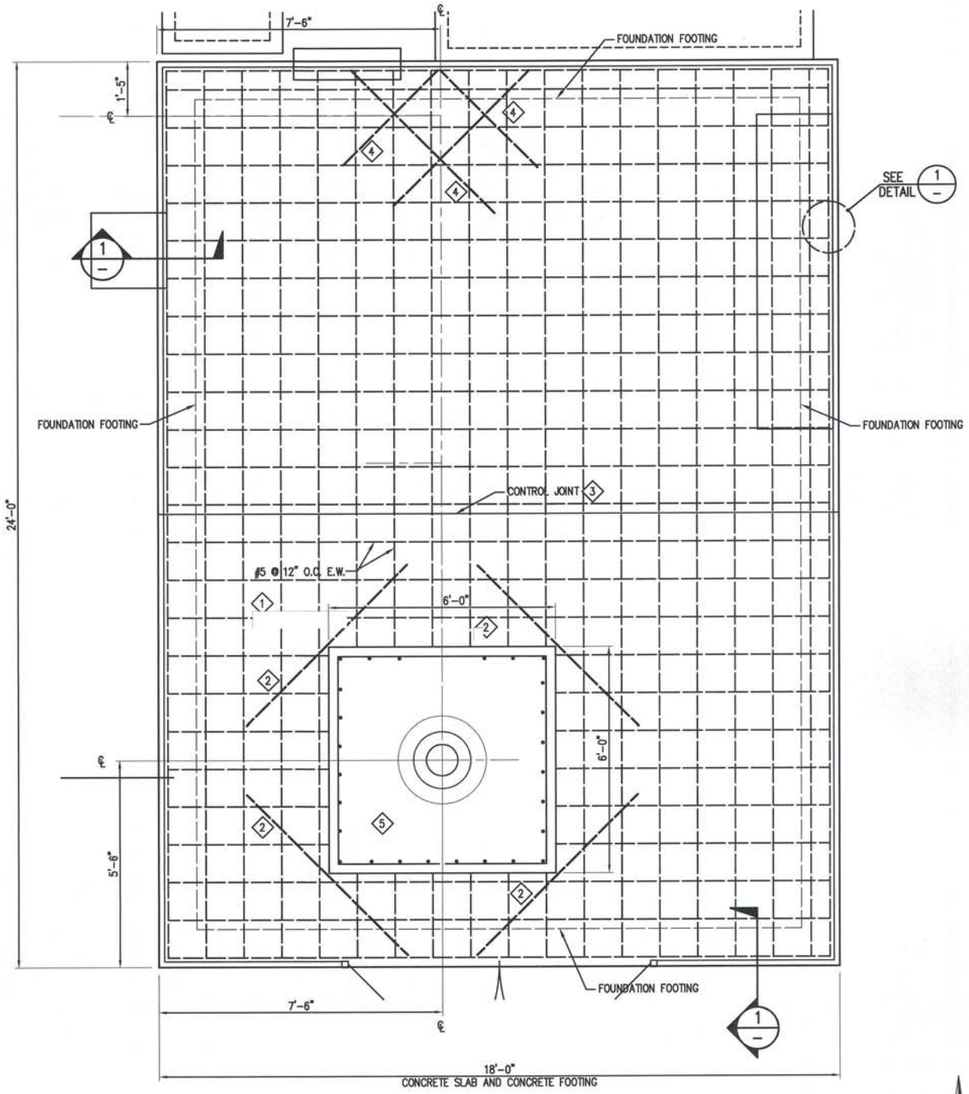

FLOOR & FOUNDATION PLAN

SCALE: 1/2" = 1'-0"

DATUM:

DATUM (0'-0") IS AT FINISHED FLOOR AT INSIDE FACE OF WELL BUILDING WALLS AT ELEV. 1414.00.

NOTES FOR CONTRACTOR:

1. FIELD VERIFY ANCHOR BOLT SIZE AND LOCATION WITH EQUIPMENT VENDORS PRIOR TO INSTALLATION.
2. ALL ANCHORS SHALL BE 1" ASTM F593 STAINLESS STEEL. ALL ANCHORS SHALL BE INSTALLED IN ACCORDANCE WITH HILTI'S RECOMMENDATIONS AND ICC ESR-2322.
3. DEPUTY INSPECTION IS REQUIRED FOR THE INSTALLATION OF EPOXY ANCHORS. ANCHORS SHALL BE HAMMER DRILLED HILTI HIT-RE 500-SD+HAS-R

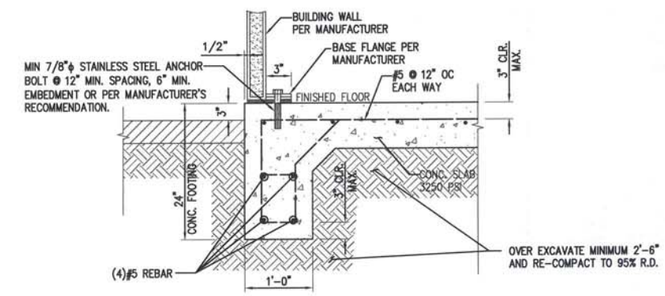

WALL ANCHOR DETAIL 1/-

NOT TO SCALE

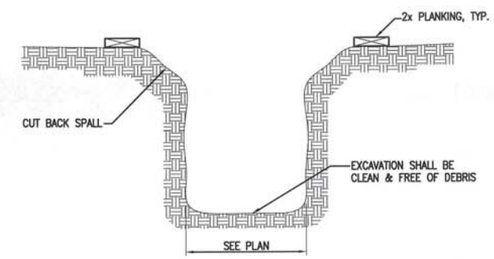

NOTES:

1. STAKES NOT PERMITTED WITHIN FOOTING SECTION.
2. FOUNDATION CONCRETE MAY BE PLACED DIRECTLY INTO NEAT EXCAVATIONS PROVIDED TRENCH WALLS ARE STABLE. STABILITY SHALL BE DETERMINED BY THE ENGINEER.

TYPICAL FOOTING EXCAVATION DETAIL 2/-

NOT TO SCALE

REV	DATE	REVISION	APPR'D	REV BY

DIAL 811 DIGALERT — UNDERGROUND SERVICE ALERT — PLAY IT SAFE. DIAL BEFORE YOU DIG! — AT LEAST TWO WORKING DAYS PRIOR TO EXCAVATING

REGISTERED PROFESSIONAL ENGINEER — CHRISTOPHER SHEM HAWES — Exp. 6/30/2014 — No. 69578 — CIVIL — STATE OF CALIFORNIA — 6/18/14

PLANS PREPARED BY:

General Civil, Transportation, Municipal, Water and Wastewater Engineering, Planning, Construction Management, and Surveying

118 West Lime Avenue
Monrovia, Ca. 91016
Phone: (626) 357-0588
Fax: (626) 303-7957

CIVILTEC engineering inc.
Monrovia • Prescott • Phoenix

ERM

GROUNDWATER EXTRACTION AND TREATMENT SYSTEM COMBINED REMEDY SOURCE AREA OPERABLE UNIT, ROCKETS, FIREWORKS, AND FLARES SUPERFUND SITE

SCALE	AS SHOWN	DESIGNED BY	JM/BS/BD/CD	DRAWN BY	JM/BS/CD	DRAWING NUMBER	
DATE	SCALE	CHECKED	BD/CSH	APPROVED		JOB NUMBER	2013175.00

REV

SHEET 33

DISCIPLINE NO. S-5

WELL BUILDING FOUNDATION PLAN AND DETAILS

ENVIRONMENTAL RESOURCES MANAGEMENT

X:\2013\2013175.00-ERM-RIALTO TREATMENT PLANT EXPANSION\DWG\TREATMENT PLANT\2013175.00 RIALTO-SHT33 S-5 WELL BUILDING FOUNDATION P

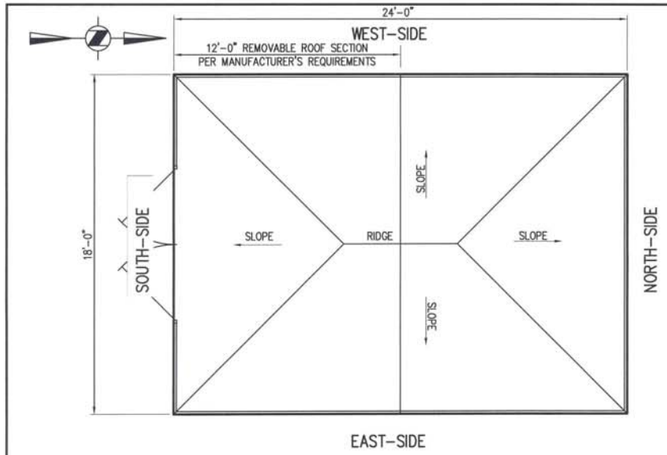

WELL BUILDING ROOF PLAN

SCALE: 1/4"=1'-0"

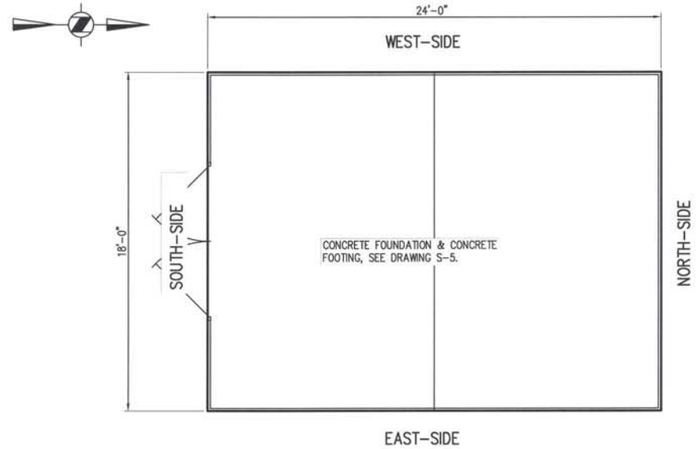

WELL BUILDING FLOOR PLAN

SCALE: 1/2"=1'-0"

BUILDING FINISH SCHEDULE

ROOM NAME	FLOORS		BASE			WALLS				CEILINGS
	VINYL COMPOSITION TILE	SEALED CONCRETE	NONE	4" RUBBER COVERS	NONE	PG – PAINTED GYPSUM BOARD PB – PAINTED CMU/CONCRETE SB – SEALED CMU/CONCRETE AC –PAINTED AC FIR N – NO FINISH FRP – FIBERGLASS FOAM REINFORCED PANEL VBI – VINYL BACKED INSULATION ML – METAL LINER				PG – PAINTED GYPSUM BOARD EP – EPOXY PAINTED GYPSUM BOARD CI – SUSPENDED LAY-IN-TILE N – NO CEILING (EXPOSED STRUCTURE) PS – PAINTED STRUCTURE AS–ALUMINUM SOFFIT AC –PAINTED AC FIR VBI – VINYL BACKED INSULATION FRP – FIBERGLASS FOAM REINFORCED PANEL
						NORTH	EAST	SOUTH	WEST	
WELL BUILDING		X				FRP	FRP	FRP	FRP	FRP
UV BUILDING		X				FRP	FRP	FRP	FRP	FRP
CONTROL BUILDING		X				FRP	FRP	FRP	FRP	FRP

HVAC SCHEDULE

	DESCRIPTION	LOCATION	MANUFACTURER	MODEL NUMBER	OPENING	WATTS	AMPS	VOLTAGE	HP	REMARKS
H-1	WALL MOUNTED AC UNIT	WELL BUILDING	FRIEDRICH OR EQUAL	M12CH-MW12C1H	11"x33"x7"DEEP		15	115		
H-2	THERMOSTAT- INTERIOR	WELL BUILDING	HONEYWELL OR EQUAL							
H-3	THERMOSTAT- EXTERIOR	WELL BUILDING	HONEYWELL OR EQUAL							
H-4	DOOR LOUVER WITH BIRD SCREEN	WELL BUILDING	INDUSTRIAL LOUVERS INC. OR EQUAL		12" SQUARE					
H-5	DOOR LOUVER WITH BIRD SCREEN	UV BUILDING	INDUSTRIAL LOUVERS INC. OR EQUAL		12" SQUARE					
H-6	WALL MOUNTED AC UNIT	UV BUILDING	FRIEDRICH OR EQUAL	M12CH-MW12C1H	11"x33"x7"DEEP		15	115		
H-7	CONC. PAD MOUNTED CU-1 UNIT	WELL BUILDING	KRACK OR EQUAL							
H-8	CONC. PAD MOUNTED CU-1 UNIT	UV BUILDING	KRACK OR EQUAL							
H-9	WALL MOUNTED EXHAUST FAN	WELL BUILDING	DAYTON OR EQUAL		12" SQUARE				1/4	
H-10	WALL MOUNTED EXHAUST FAN	UV BUILDING	DAYTON OR EQUAL		12" SQUARE				1/4	
H-11	DOOR LOUVER WITH BIRD SCREEN	CONTROL BLDG.	INDUSTRIAL LOUVERS INC. OR EQUAL		12" SQUARE					
H-12	WALL MOUNTED AC UNIT	CONTROL BLDG.	FRIEDRICH OR EQUAL	M12CH-MW12C1H	11"x33"x7"DEEP		15	115		

DOOR SCHEDULE

	DESCRIPTION	TYPE	LOCATION	SIZE	THICK	HINGE	LOCKSET	HARDWARE GROUP (SEE SPECS.)	PANIC	LOUVER	REMARKS
D-1	WELL BUILDING STD. DOOR	A	WELL BUILDING	(2) 4'-0" x 7'-0"	3/4	R & L	BEST ACCESS SYSTEMS 64K-7-AB-4-D-S3-626 OR EQUAL	H-1	NO	12"SQ./EA.	FRP MATERIAL PER SPEC
D-2	UV BUILDING DOUBLE DOOR	A	WELL BUILDING	(2) 3'-0" x 7'-0"	3/4	R & L	BEST ACCESS SYSTEMS 64K-7-AB-4-D-S3-626 OR EQUAL	H-1	NO	12"SQ./EA.	FRP MATERIAL PER SPEC
D-3	CONTROL BUILDING STD. DOOR	A	WELL BUILDING	3'-0" x 7'-0"	3/4	R & L	BEST ACCESS SYSTEMS 64K-7-AB-4-D-S3-626 OR EQUAL	H-1	NO	12"SQ./EA.	FRP MATERIAL PER SPEC

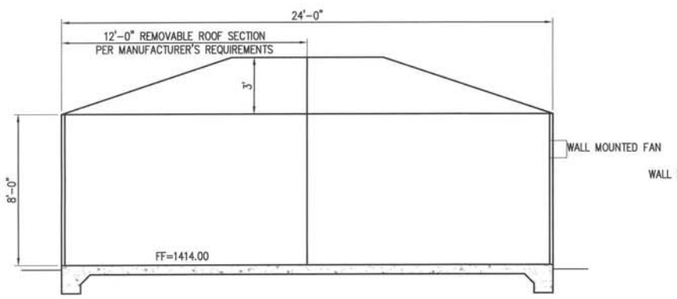

WELL BUILDING EAST-SIDE ELEVATION

SCALE: 1/4"=1'-0"

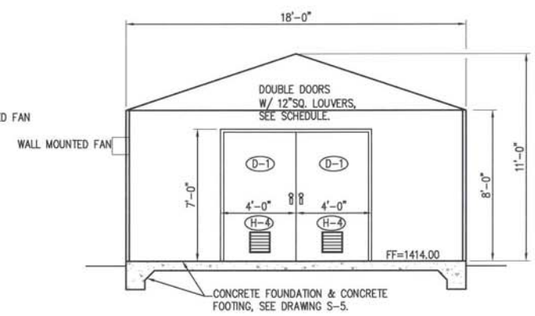

WELL BUILDING SOUTH-SIDE ELEVATION

SCALE: 1/4"=1'-0"

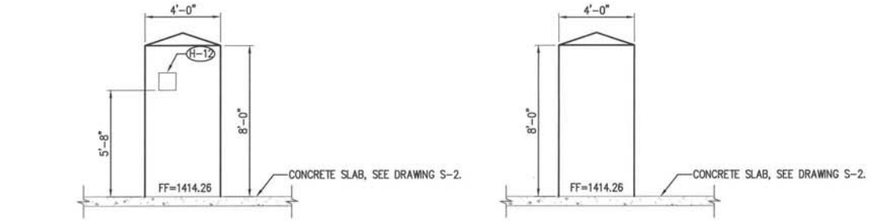

CONTROL BUILDING EAST-SIDE ELEVATION

SCALE: 1/4"=1'-0"

CONTROL BUILDING WEST-SIDE ELEVATION

SCALE: 1/4"=1'-0"

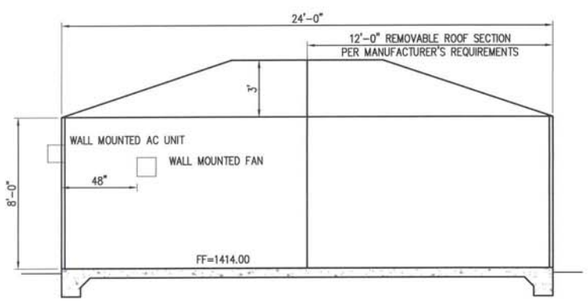

WELL BUILDING WEST-SIDE ELEVATION

SCALE: 1/4"=1'-0"

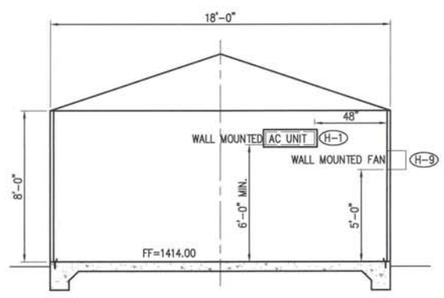

WELL BUILDING NORTH-SIDE ELEVATION

SCALE: 1/4"=1'-0"

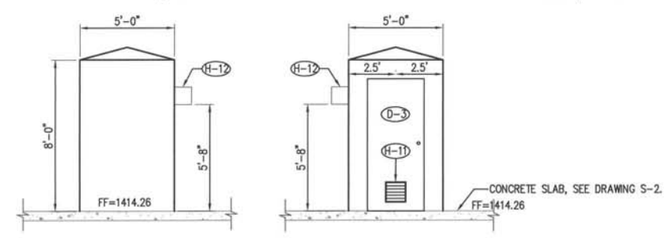

CONTROL BUILDING SOUTH-SIDE ELEVATION

SCALE: 1/4"=1'-0"

CONTROL BUILDING NORTH-SIDE ELEVATION

SCALE: 1/4"=1'-0"

REV	DATE	REVISION	APPR'D	REV BY

DIAL 811
DIGALERT
UNDERGROUND SERVICE ALERT
PLAY IT SAFE. DIAL BEFORE YOU DIG!
AT LEAST TWO WORKING DAYS PRIOR TO EXCAVATING

REGISTERED PROFESSIONAL ENGINEER
CHRISTOPHER SHEM HAWES
Exp. 6/30/2014
No. 69578
CIVIL
STATE OF CALIFORNIA
6/18/14

PLANS PREPARED BY:

General Civil, Transportation, Municipal, Water and Wastewater Engineering, Planning, Construction Management, and Surveying

118 West Lime Avenue
Monrovia, Ca. 91016
Phone: (626) 357-0588
Fax: (626) 303-7957

CIVILTEC engineering inc.
Monrovia • Prescott • Phoenix

ERM

GROUNDWATER EXTRACTION AND TREATMENT SYSTEM COMBINED REMEDY SOURCE AREA OPERABLE UNIT, ROCKETS, FIREWORKS, AND FLARES SUPERFUND SITE

REV

SCALE	AS SHOWN	DESIGNED BY	JM/BS/BD/CD	DRAWN BY	JM/BS/CD	DRAWING NUMBER	
DATE	SCALE	CHECKED	BD/CSH	APPROVED		JOB NUMBER	2013175.00

SHEET 34

WELL BUILDING FLOOR PLAN, ROOFING PLAN AND ELEVATIONS

DISCIPLINE NO. S-6

ENVIRONMENTAL RESOURCES MANAGEMENT

X:\2013\2013175.00-ERM-RIALTO TREATMENT PLANT EXPANSION\DWG\TREATMENT PLANT\2013175.00 RIALTO-SHT34 S-6 WELL BUILDING FLOOR PLAN.

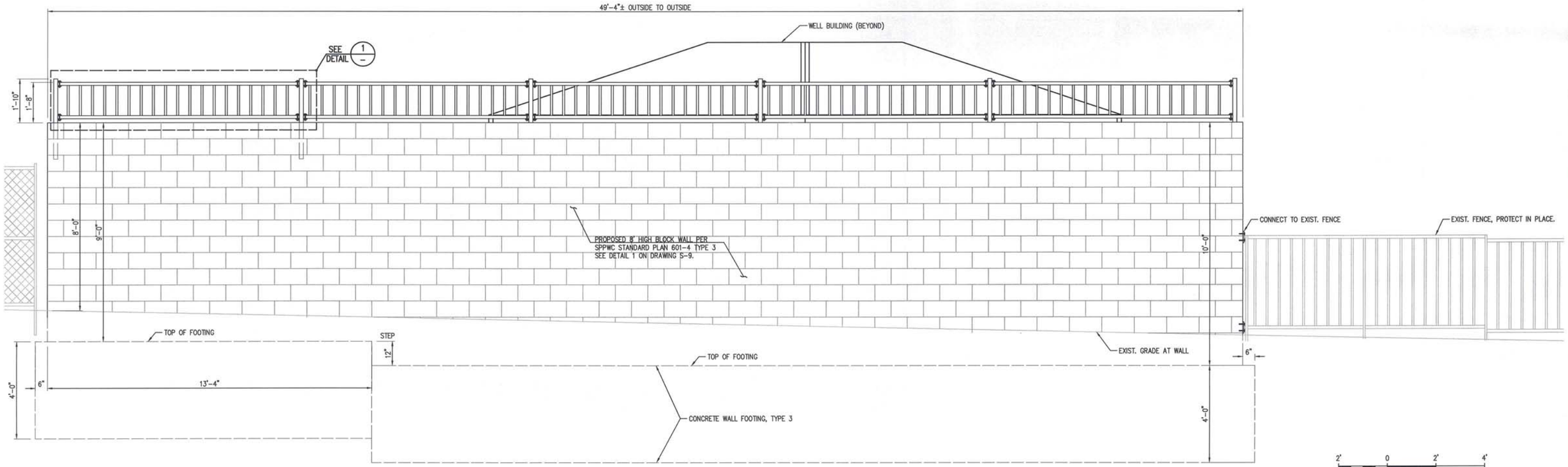

WEST WALL ELEVATION

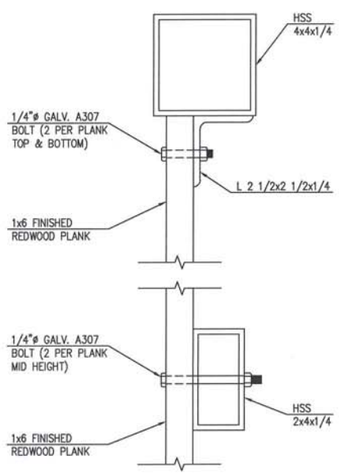

GATE DETAIL 4/S-7
NOT TO SCALE

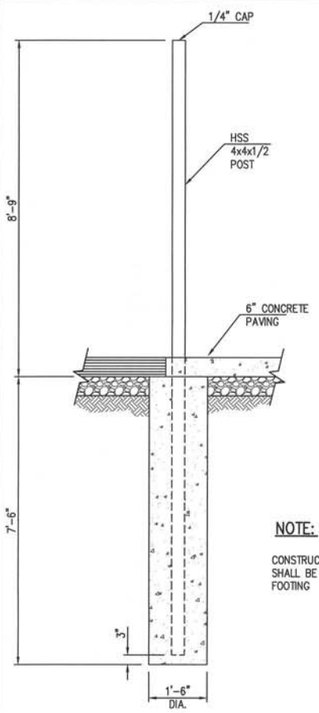

NOTE:

CONSTRUCTION OF POST FOOTING SHALL BE COMBINED WITH PERIMETER FOOTING

GATE POST FOOTING DETAIL 3/S-7
NOT TO SCALE

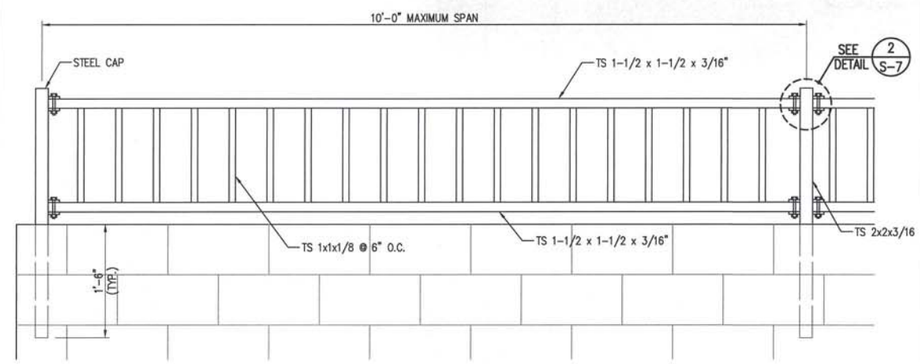

NOTES:

1. ALL STEEL SHALL BE POWDER COATED TO MATCH COLOR OF EXISTING FENCE.
2. POST TO BE CAST INTO CMU BLOCK DURING GROUTING OF THE FINAL 2-FT. MINIMUM EMBEDMENT DEPTH = 18" FROM TOP OF CMU.
3. PROVIDE 1/2" DIA. BOLT HOLES IN 1-1/2" x 1-1/2" x 3/16"TS TO MATCH BOLT HOLES IN RECEIVING FITTINGS.
4. POSTS SHALL BE SPACED EVENLY BETWEEN STRAIGHT WALL SEGMENTS WITH A MAXIMUM SPACING OF 6'. CONTRACTOR SHALL SUBMIT SHOP DRAWINGS DETAILING THE DIMENSIONS FOR EACH SECTION FOR REVIEW AND COMMENT BY THE CITY PRIOR TO FABRICATION.

DETAIL 1/S-7
NOT TO SCALE

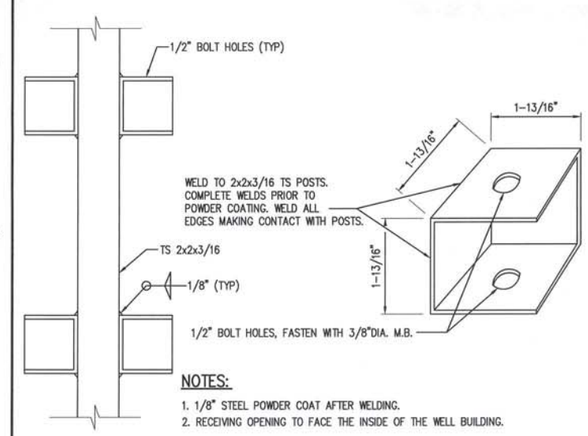

NOTES:

1. 1/8" STEEL POWDER COAT AFTER WELDING.
2. RECEIVING OPENING TO FACE THE INSIDE OF THE WELL BUILDING.

DETAIL 2/S-7
NOT TO SCALE

REV	DATE	REVISION	APPR'D	REV BY

DIAL 811 DIGALERT — UNDERGROUND SERVICE ALERT

PLAY IT SAFE. DIAL BEFORE YOU DIG! — AT LEAST TWO WORKING DAYS PRIOR TO EXCAVATING

REGISTERED PROFESSIONAL ENGINEER — CHRISTOPHER CSHEM HAWES — Exp. 6/30/2014 — No. 69578 — CIVIL — STATE OF CALIFORNIA — 10/18/14

PLANS PREPARED BY:

General Civil, Transportation, Municipal, Water and Wastewater Engineering, Planning, Construction Management, and Surveying

118 West Lime Avenue
Monrovia, Ca. 91016
Phone: (626) 357-0588
Fax: (626) 303-7957

CIVILTEC engineering inc.
Monrovia • Prescott • Phoenix

ERM

GROUNDWATER EXTRACTION AND TREATMENT SYSTEM COMBINED REMEDY SOURCE AREA OPERABLE UNIT, ROCKETS, FIREWORKS, AND FLARES SUPERFUND SITE

SCALE	DESIGNED BY	DRAWN BY	DRAWING NUMBER
AS SHOWN	JM/BS/BD/CD	JM/BS/CD	
DATE / SCALE	CHECKED BD/CSH	APPROVED	JOB NUMBER 2013175.00

REV

SHEET 35

DISCIPLINE NO. S-7

WELL SITE WALL ELEVATIONS AND DETAILS

ENVIRONMENTAL RESOURCES MANAGEMENT

X:\2013\2013175.00-ERM-RIALTO TREATMENT PLANT EXPANSION\DWG\TREATMENT PLANT\2013175.00 RIALTO-SHTS S-7 WELL SITE WALL ELEVATIONS

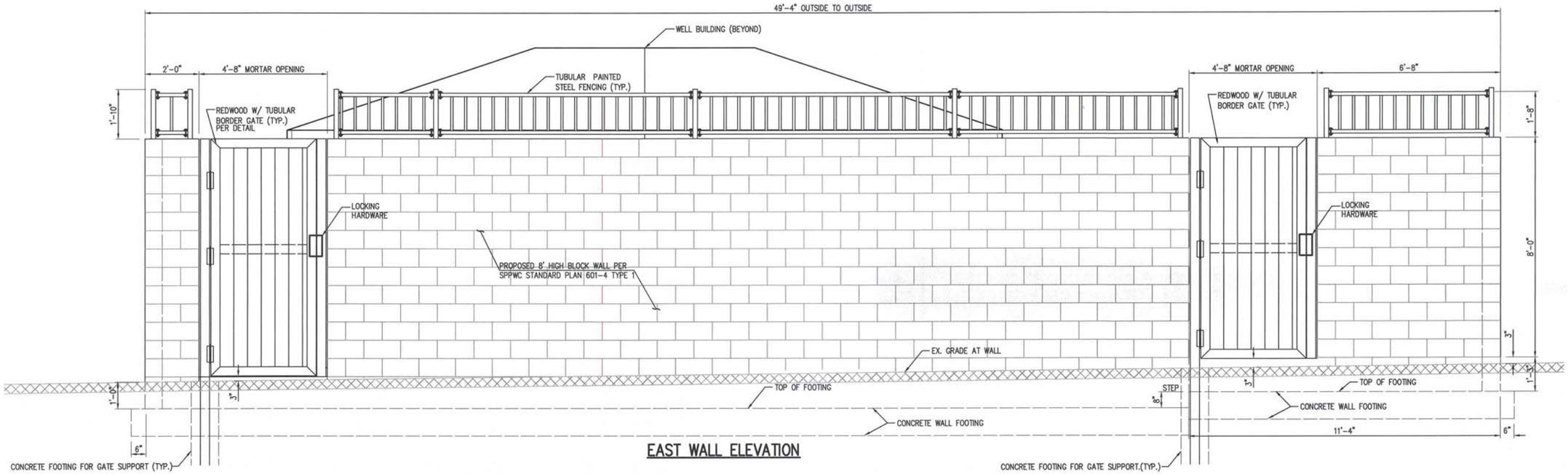

EAST WALL ELEVATION

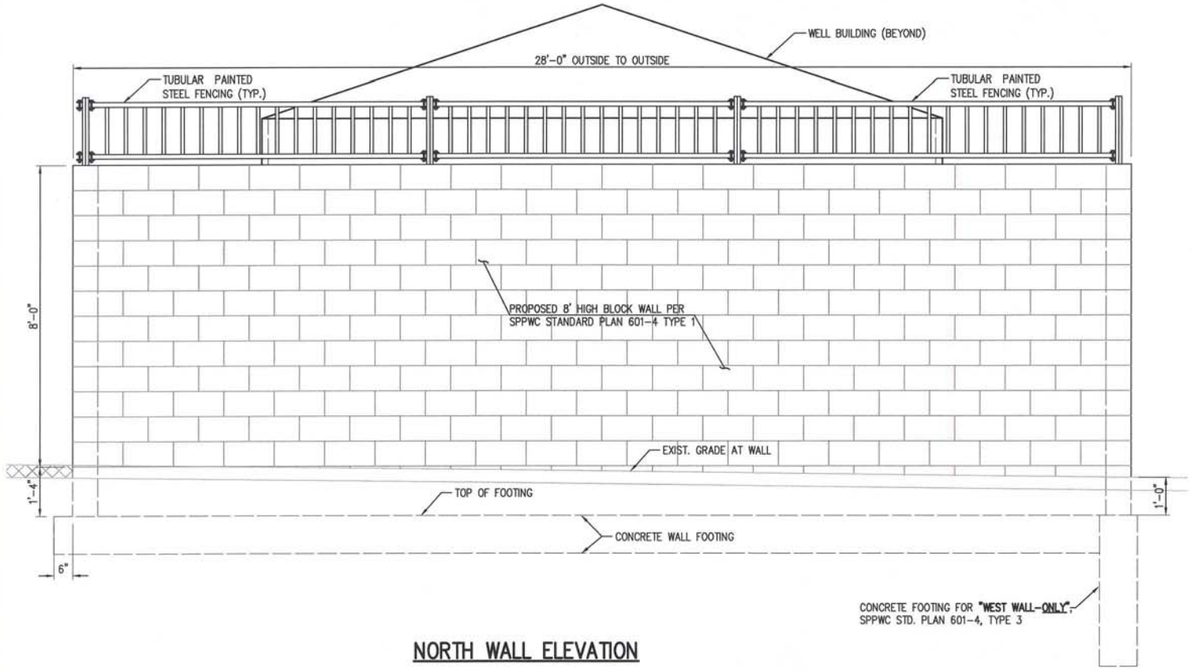

NORTH WALL ELEVATION

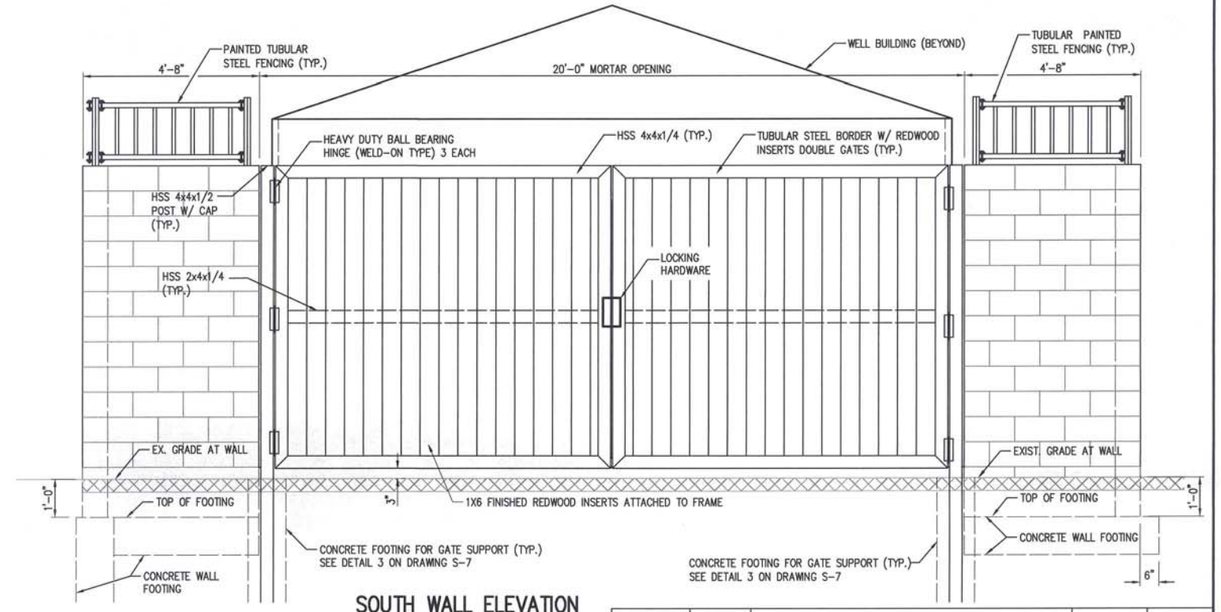

SOUTH WALL ELEVATION

2' 0 2' 4'
GRAPHIC SCALE

REV	DATE	REVISION	APPR'D	REV BY

DIAL 811
DIGALERT
UNDERGROUND SERVICE ALERT
PLAY IT SAFE. DIAL BEFORE YOU DIG!
AT LEAST TWO WORKING DAYS PRIOR TO EXCAVATING

REGISTERED PROFESSIONAL ENGINEER CHRISTOPHER SHEM HAWES Exp. 6/30/2014 No. 69578 CIVIL STATE OF CALIFORNIA 6/18/14

PLANS PREPARED BY:

General Civil, Transportation, Municipal, Water and Wastewater Engineering, Planning, Construction Management, and Surveying

118 West Lime Avenue
Monrovia, Ca. 91016
Phone: (626) 357-0588
Fax: (626) 303-7957

CIVILTEC engineering inc.
Monrovia • Prescott • Phoenix

ERM

GROUNDWATER EXTRACTION AND TREATMENT SYSTEM COMBINED REMEDY SOURCE AREA OPERABLE UNIT, ROCKETS, FIREWORKS, AND FLARES SUPERFUND SITE

SCALE	AS SHOWN	DESIGNED BY	JM/BS/BD/CD	DRAWN BY	JM/BS/CD	DRAWING NUMBER	
DATE	SCALE	CHECKED	BD/CSH	APPROVED		JOB NUMBER	2013175.00

REV

SHEET 36

WELL SITE WALL ELEVATIONS AND DETAILS

DISCIPLINE NO. S-8

ENVIRONMENTAL RESOURCES MANAGEMENT

K:\2013\2013175.00-ERM-RIALTO TREATMENT PLANT EXPANSION\DWG\TREATMENT PLANT\2013175.00 RIALTO-SHT36 S-8 WELL SITE WALL ELEVATIONS

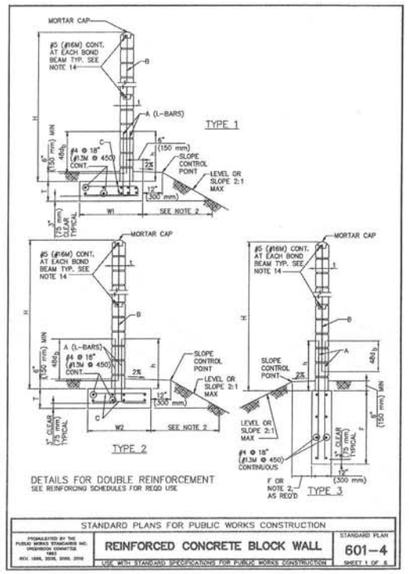

STANDARD PLANS FOR PUBLIC WORKS CONSTRUCTION

ESTABLISHED BY THE PUBLIC WORKS STANDARDS INC. UNIFORMITY COMMITTEE 1982 REV. 1986, 2006, 2008, 2010

REINFORCED CONCRETE BLOCK WALL

USE WITH STANDARD SPECIFICATIONS FOR PUBLIC WORKS CONSTRUCTION

STANDARD PLAN 601-4 SHEET 1 OF 6

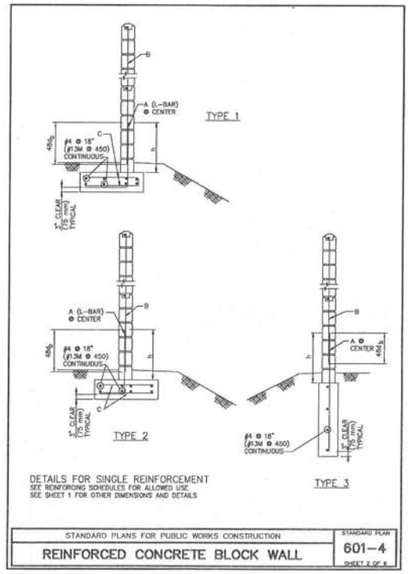

STANDARD PLANS FOR PUBLIC WORKS CONSTRUCTION

REINFORCED CONCRETE BLOCK WALL

STANDARD PLAN 601-4 SHEET 2 OF 6

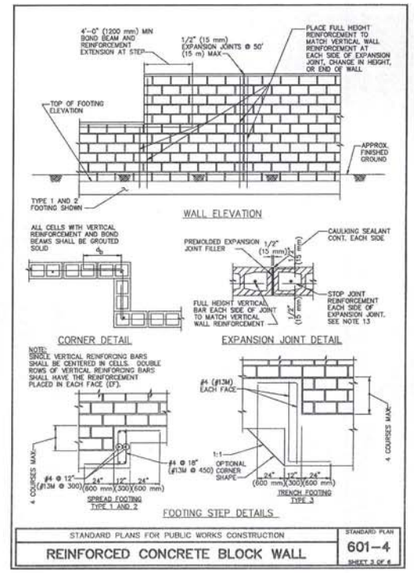

STANDARD PLANS FOR PUBLIC WORKS CONSTRUCTION

REINFORCED CONCRETE BLOCK WALL

STANDARD PLAN 601-4 SHEET 3 OF 6

LATERAL LOAD = 15 PSF (720 Pa)

STEM		FOOTING				REINFORCING BARS			
						CUTOFF	SPACING, O.C.		
H	t	T	W1 (TYPE 1)	W2 (TYPE 2)	F (TYPE 3)	h	A	B	C
6'-0" (1.8 m)	6" (150 mm)	12" (300 mm)	2'-3" (675 mm)	2'-3" (675 mm)	2'-9" (825 mm)	30" (750 mm)	#4 @ 48"* (#13M@1200*)	#4 @ 48" (#13M@1200)	#4 @ 48"* (#13M@1200*)
8'-0" (2.4 m)	8" (200 mm)	12" (300 mm)	2'-9" (825 mm)	2'-6" (750 mm)	3'-3" (975 mm)	30" (750 mm)	#4 @ 32"* (#13M@800*)	#4 @ 32" (#13M@800)	#4 @ 32"* (#13M@800*)
10'-0" (3.0 m)	8" (200 mm)	12" (300 mm)	3'-9" (1125 mm)	3'-0" (900 mm)	3'-9" (1125 mm)	30" (750 mm)	#4 @ 32"EF (#13M@800E)	#4 @ 32" (#13M@800)	#4 @ 32" (#13M@800)

LATERAL LOAD = 20 PSF (950 Pa)

STEM		FOOTING				REINFORCING BARS			
						CUTOFF	SPACING, O.C.		
H	t	T	W1 (TYPE 1)	W2 (TYPE 2)	F (TYPE 3)	h	A	B	C
6'-0" (1.8 m)	6" (150 mm)	12" 300 mm	2'-9" (825 mm)	2'-6" (750 mm)	3'-3" (975 mm)	30" (750 mm)	#5 @ 32"* (#16M@800*)	#4 @ 32" (#13M@800)	#4 @ 32"* (#13M@800*)
8'-0" (2.4 m)	8" (200 mm)	12" 300 mm	3'-3" (975 mm)	3'-0" (900 mm)	3'-9" (1125 mm)	30" (750 mm)	#4 @ 32"EF (#13M@800E)	#4 @ 32" (#13M@800)	#4 @ 32" (#13M@800)
10'-0" (3.0 m)	8" (200 mm)	12" 300 mm	4'-3" (1275 mm)	3'-6" (1050 mm)	4'-3" (1275 mm)	42" (1050 mm)	#5 @ 32"EF (#16M@800E)	#4 @ 32" (#13M@800)	#5 @ 32" (#16M@800)

LATERAL LOAD = 25 PSF (1200 Pa)

STEM		FOOTING				REINFORCING BARS			
						CUTOFF	SPACING, O.C.		
H	t	T	W1 (TYPE 1)	W2 (TYPE 2)	F (TYPE 3)	h	A	B	C
6'-0" (1.8 m)	6" (150 mm)	12" (300 mm)	3'-0" (900 mm)	2'-9" (825 mm)	3'-6" (1050 mm)	30" (750 mm)	#5 @ 16"* (#16M@400*)	#4 @ 32" (#13M@800)	#4 @ 32" (#13M@800)
8'-0" (2.4 m)	8" (200 mm)	12" (300 mm)	3'-9" (1125 mm)	3'-3" (975 mm)	4'-0" (1200 mm)	30" (750 mm)	#4 @ 16"EF (#13M@400E)	#4 @ 32" (#13M@800)	#4 @ 32" (#13M@800)
10'-0" (3.0 m)	8" (200 mm)	12" (300 mm)	4'-9" (1425 mm)	4'-0" (1200 mm)	4'-9" (1425 mm)	50" (1250 mm)	#5 @ 16"EF (#16M@400E)	#4 @ 32" (#13M@800)	#5 @ 32" (#16M@800)

NOTE

SINGLE VERTICAL REINFORCING BARS SHALL BE CENTERED IN CELL.
* FOR SINGLE A-BARS IN FOUNDATION, SEE SHEET 2.
DOUBLE ROWS OF VERTICAL REINFORCING WHERE INDICATED SHALL BE PLACED AT EACH FACE (EF).

STANDARD PLANS FOR PUBLIC WORKS CONSTRUCTION

REINFORCED CONCRETE BLOCK WALL

STANDARD PLAN 601-4 SHEET 4 OF 6

DESIGN CRITERIA:

MATERIALS DESIGN DATA:

REINFORCING STEEL ..... fy = 60 KSI (400 MPa)

CONCRETE 28TH-DAY STRENGTH:
FOOTING ..... f'c = 2,500 PSI (17 MPa)

CONCRETE MASONRY:
PARTIALLY GROUTED ..... f'm = 1,500 PSI (10 MPa)

DESIGN CODE: ..... GOVERNING BUILDING CODE

DESIGN METHOD:

CONCRETE ..... ULTIMATE STRENGTH METHOD
CONCRETE MASONRY ..... WORKING STRESS METHOD

FOUNDATION:

ALLOWABLE SOIL BEARING PRESSURE ..... 1,000 PSF (48 kPa)
ALLOWABLE LATERAL SOIL BEARING PRESSURE ..... 100 PSF / FT OF DEPTH (157 kPa / m OF DEPTH)
LATERAL SLIDING RESISTANCE AT CONTACT AREA ..... 130 PSF (6.2 kPa) BUT NOT TO EXCEED 0.40 X DL
SOIL DENSITY ..... 110 PCF (1760 kg/m^3)
FACTORS OF SAFETY FOR SPREAD FOOTING (BASED ON SERVICE LOAD CONDITIONS):
OVERTURNING ..... 1.75 MINIMUM
SLIDING ..... 1.5 MINIMUM

ONE THIRD INCREASE IS ALLOWED FOR SHORT TERM LOADS.

STANDARD PLANS FOR PUBLIC WORKS CONSTRUCTION

REINFORCED CONCRETE BLOCK WALL

STANDARD PLAN 601-4 SHEET 5 OF 6

1 REINFORCED CONCRETE BLOCK WALL

GENERAL NOTES:

1. CONSULT WITH LOCAL GOVERNING AGENCY FOR DETERMINATION OF LATERAL LOAD AND WALL TYPE LISTED IN TABLES, FOR PROJECT-SPECIFIC USE.
2. DISTANCE OF THE FOOTING FROM DESCENDING SLOPE SHALL BE PER LATEST GOVERNING BUILDING CODE OR PER AGENCY REQUIREMENTS.
3. SPECIAL INSPECTION IS NOT REQUIRED FOR WALLS.
4. GROUND LINE TO BE AT THE SAME ELEVATION ON BOTH SIDES OF THE WALL. WALL SHALL NOT BE USED TO RETAIN EARTH.
5. USE TABULAR INFORMATION FOR THE NEXT HIGHER H FOR INTERMEDIATE WALL HEIGHTS THAT ARE BETWEEN THE H'S GIVEN.
6. CONCRETE SHALL BE 500-C-2500 (295-C-17) PER SSPWC 201-1.1.2.
7. REINFORCING SHALL BE LAPPED A MINIMUM 48 BAR DIA. GRADE 60 UNLESS NOTED OTHERWISE PER SSPWC SECTION 201-2, 303-4.1.3. JOINT REINFORCING WIRE: ASTM A82.
8. ALL REINFORCED CONCRETE CONSTRUCTION SHALL BE IN ACCORDANCE WITH SSPWC 303.
9. FOR TYPE OF BLOCKS, BOND PATTERN AND JOINT FINISH, SEE PROJECT PLANS.
10. ALL MASONRY CONSTRUCTION TO BE IN ACCORDANCE WITH SSPWC 303-4.
11. HOLLOW MASONRY UNITS...ASTM C-90. TYPE I, NORMAL WEIGHT UNITS.

    MORTAR ....1:1/2:3, PORTLAND CEMENT - LIME - SAND RATIO, 1800 PSI (13 MPa) PER SSPWC 202-2.2.1.

    GROUT .....1:3:2 PORTLAND CEMENT - SAND - PEA GRAVEL RATIO, 2,000 PSI (14 MPa) PER SSPWC 202-2.2.2.
12. PROVIDE FULL MORTAR BED AT THE BOTTOM OF THE FIRST COURSE AND OMIT MORTAR BETWEEN VERTICAL JOINTS OF LOWEST EXPOSED COURSE.
13. WHEN BLOCKS ARE LAID IN STACKED BOND, CONTINUOUS HORIZONTAL JOINT REINFORCEMENT SPACED AT 4'-0" (1200 mm) OC SHALL BE PROVIDED IN ADDITION TO THE BOND BEAM REINFORCEMENT PER SSPWC 303-4.1.2. LOCATE REINFORCEMENT IN JOINTS THAT ARE APPROXIMATE MIDPOINT BETWEEN BOND BEAMS.
14. BOND BEAMS SHALL BE PLACED AT TOP OF WALL AND SUBSEQUENTLY SPACED NOT TO EXCEED 4'-0" (1200 mm) O.C. BELOW.
15. ONLY CELLS WITH REINFORCING BARS SHALL BE GROUTED PER SSPWC 303-4.1.3.
16. HORIZONTAL JOINTS SHALL BE TOOLED CONCAVE OR WEATHERED. VERTICAL JOINTS SHALL BE TOOLED CONCAVE OR RAKED. WEATHERED AND RAKED JOINTS ARE NOT PERMITTED FOR SLUMPED BLOCKS.

STANDARD PLANS FOR PUBLIC WORKS CONSTRUCTION

REINFORCED CONCRETE BLOCK WALL

STANDARD PLAN 601-4 SHEET 6 OF 6

1 REINFORCED CONCRETE BLOCK WALL

X:\2013\2013175.00-EMW-RALTO TREATMENT PLANT EXPANSION\DWG\TREATMENT PLANT\2013175.00 RALTO-SHT37 S-9 SSPWC STANDARD WALL DETAIL

DIAL 811
DIGALERT
UNDERGROUND SERVICE ALERT
PLAY IT SAFE. DIAL BEFORE YOU DIG!
AT LEAST TWO WORKING DAYS PRIOR TO EXCAVATING

REGISTERED PROFESSIONAL ENGINEER
CHRISTOPHER SHEM HAWES
Exp. 6/30/2014
No. 69578
CIVIL
STATE OF CALIFORNIA
6/18/14

PLANS PREPARED BY:

General Civil, Transportation, Municipal, Water and Wastewater Engineering, Planning, Construction Management, and Surveying

118 West Lime Avenue
Monrovia, Ca. 91016
Phone: (626) 357-0588
Fax: (626) 303-7957

CIVILTEC engineering inc.
Monrovia • Prescott • Phoenix

ERM

REV	DATE	REVISION	APPR'D	REV BY

GROUNDWATER EXTRACTION AND TREATMENT SYSTEM COMBINED REMEDY SOURCE AREA OPERABLE UNIT, ROCKETS, FIREWORKS, AND FLARES SUPERFUND SITE

SCALE	AS SHOWN	DESIGNED BY	JM/BS/BD/CD	DRAWN BY	JM/BS/CD	DRAWING NUMBER	
DATE	SCALE	CHECKED	BD/CSH	APPROVED		JOB NUMBER	2013175.00

REV

SHEET 37

SPPWC STANDARD WALL DETAILS

DISCIPLINE NO. S-9

ENVIRONMENTAL RESOURCES MANAGEMENT

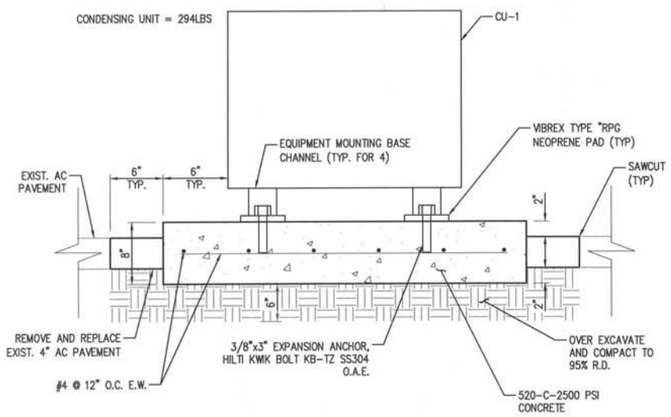

CONDENSING UNIT PAD DETAIL (1 / S-10)

NOT TO SCALE

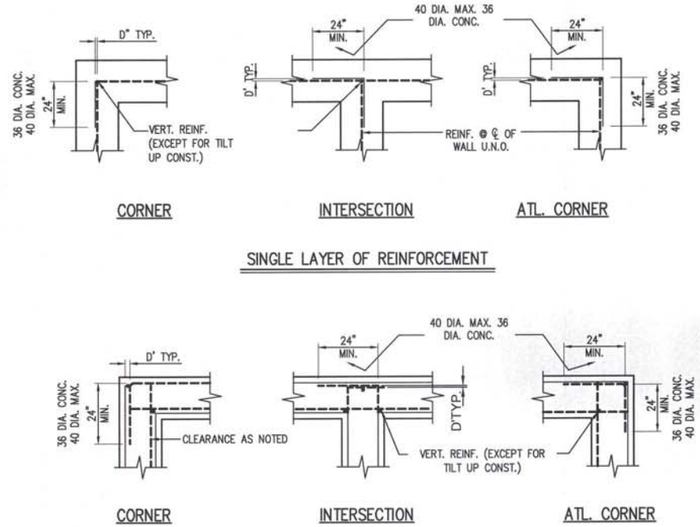

REINFORCING DETAIL (2 / S-10)

NOT TO SCALE

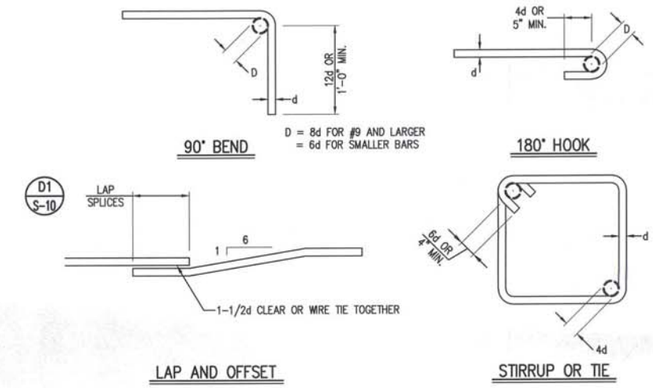

TYPICAL BAR BENDS (3 / S-10)

NOT TO SCALE

REINFORCING LAP SPLICE SCHEDULE				
BAR	f'c=2500	f'c=3250	f'c=4000	f'c=5000
	L (inches)	L (inches)	L (inches)	L (inches)
3	16	16	16	16
4	24	21	19	17
5	30	26	23	21
6	42	34	31	27
7	55	47	42	37
8	76	61	55	49

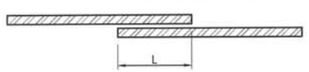

NOTES:

1. LAPS SHOWN IN THIS TABLE ARE CLASS B, CATEGORY 3 TYPE SPLICES. LAP LENGTH IS BASED UPON SMALLER OF TWO BARS BEING SPLICED.
2. INCREASE LAP LENGTHS BY A FACTOR OF 1.3 FOR HORIZONTAL REINFORCEMENT SO PLACED THAT MORE THAN 12 INCHES OF CONCRETE IS CAST IN THE MEMBER BELOW THIS REINFORCEMENT.

LAP SPLICES (4 / S-10)

NOT TO SCALE

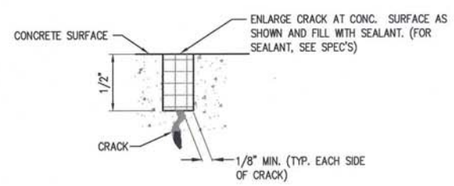

NOTE:

1. PRIOR TO FILLING, STRUCTURES TO CONTAIN WATER SHALL HAVE ALL CRACKS REPAIRED AS SHOWN IN THIS DETAIL.

CONCRETE CRACK REPAIR (5 / S-10)

NOT TO SCALE

NOTE:

1. FIELD VERIFY ANCHOR BOLT SIZE AND LOCATION WITH EQUIPMENT VENDORS PRIOR TO INSTALLATION.
2. SEE SHEET M-9 ANCHOR BOLT INSTALLATION.
3. PROVIDE SHORING FOR EXISTING FILTER DURING EXCAVATION.

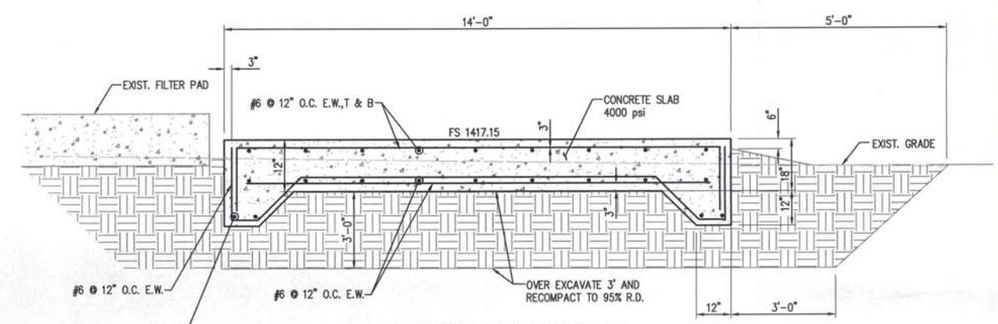

BAG FILTER PAD DETAIL (6 / S-10)

NOT TO SCALE

REV	DATE	REVISION	APPR'D	REV BY

DIAL 811 DIGALERT — UNDERGROUND SERVICE ALERT — PLAY IT SAFE. DIAL BEFORE YOU DIG! — AT LEAST TWO WORKING DAYS PRIOR TO EXCAVATING

REGISTERED PROFESSIONAL ENGINEER — CHRISTOPHER SHEM HAWES — Exp. 6/30/2014 — No. 69578 — CIVIL — STATE OF CALIFORNIA — 6/18/14

PLANS PREPARED BY:

General Civil, Transportation, Municipal, Water and Wastewater Engineering, Planning, Construction Management, and Surveying

118 West Lime Avenue
Monrovia, Ca. 91016
Phone: (626) 357-0588
Fax: (626) 303-7957

CIVILTEC engineering inc.
Monrovia • Prescott • Phoenix

ERM

GROUNDWATER EXTRACTION AND TREATMENT SYSTEM COMBINED REMEDY SOURCE AREA OPERABLE UNIT, ROCKETS, FIREWORKS, AND FLARES SUPERFUND SITE

SCALE	AS SHOWN	DESIGNED BY	JM/BS/BD/CD	DRAWN BY	JM/BS/CD	DRAWING NUMBER	
DATE	SCALE	CHECKED	BD/CSH	APPROVED		JOB NUMBER	20131175.00

REV

SHEET 38

STRUCTURAL DETAILS

DISCIPLINE NO. S-10

ENVIRONMENTAL RESOURCES MANAGEMENT

X:\20131\20131175.00-ERM-RIALTO TREATMENT PLANT EXPANSION\DWG\TREATMENT PLANT\20131175.00 RIALTO-SHT38 S-10 STRUCTURAL DETAILS.DWG (0

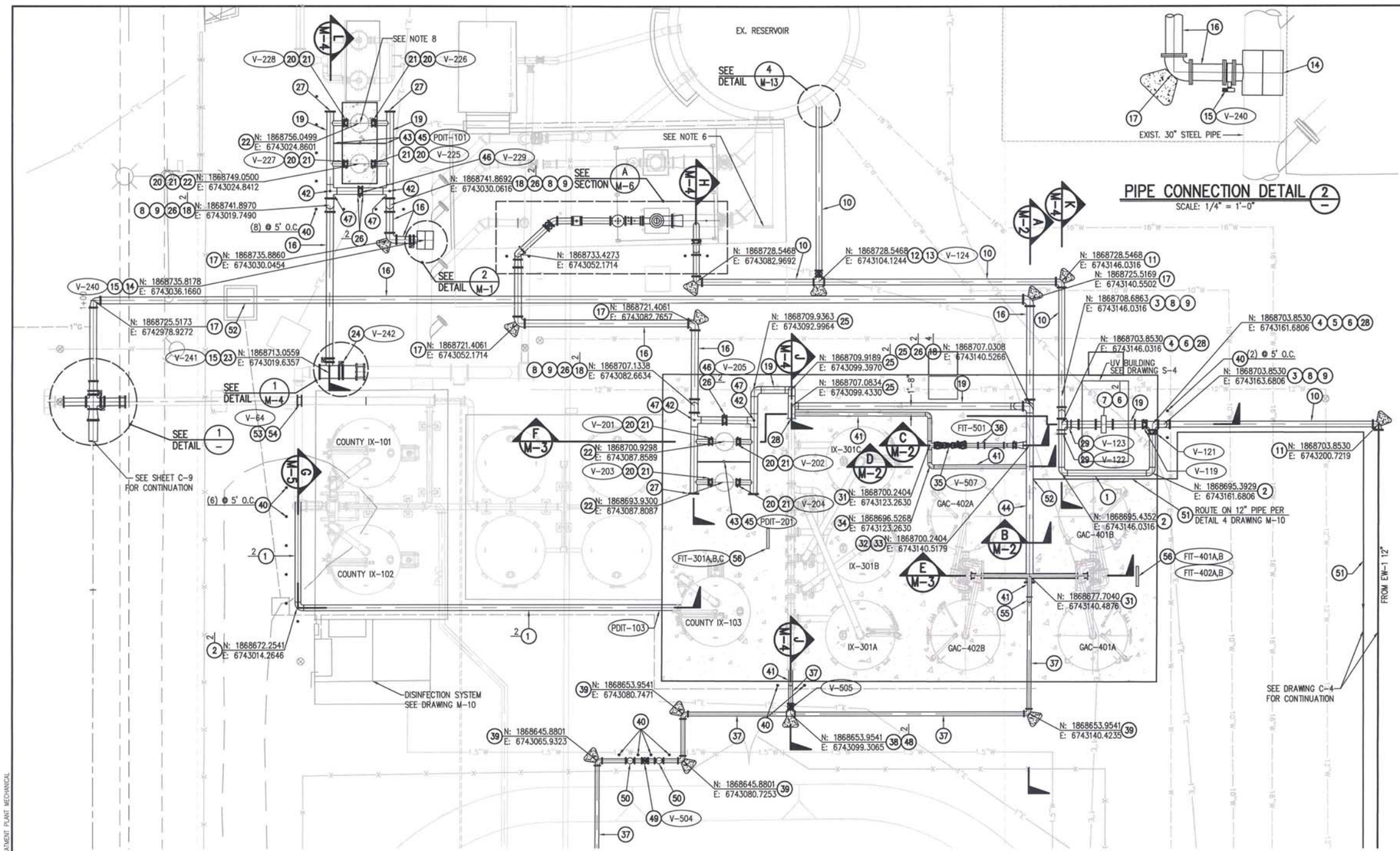

PIPE CONNECTION DETAIL 2 —

SCALE: 1/4" = 1'-0"

MECHANICAL PIPING PLAN

SCALE: 1" = 10'-0"

CONSTRUCTION NOTES: (THIS SHEET ONLY)

1. INSTALL 12" STEEL PIPE, SCH 40.
2. INSTALL 12"-90° STEEL BEND, PExPE.
3. INSTALL 12"-90° STEEL BEND, FExPE.
4. INSTALL 12"x12"x12" STEEL TEE, FExFExFE.
5. INSTALL 12" BUTTERFLY VALVE, FExFE.
6. INSTALL 12" SLIP-ON WELDING FLANGE.
7. INSTALL 12" UV DISINFECTION SYSTEM, FExFE, SIEMENS BARRIER M 2600.
8. INSTALL FLANGE ISOLATION KIT PER DETAIL 3 DRAWING M-12.
9. INSTALL DUCTILE IRON PIPE FLANGE ADAPTER.
10. INSTALL 12" DUCTILE IRON PIPE.
11. INSTALL 12"-90° DUCTILE IRON BEND, MJxMJ, WITH THRUST BLOCK PER RIALTO STANDARD NO. RW-722-0. SEE DETAIL 1 DRAWING C-19.
12. INSTALL 12"x12"x12" DUCTILE IRON TEE, FExFExFE, WITH THRUST BLOCK PER RIALTO STANDARD NO. RW-722-0. SEE DETAIL 1 DRAWING C-19.
13. INSTALL 12" RESILIENT WEDGE GATE VALVE, FExMJ, WITH VALVE BOX AND RISER PER RIALTO STANDARD RW-718-0. SEE DETAIL 2 DRAWING C-19.
14. INSTALL 30"x14" FULL WRAP TAPPING SLEEVE, MODEL ROMAC FTS419 O.A.E., FE. REMOVE INTERFERING PORTIONS OF EX. CONC. THRUST BLOCK AND REPLACE ADJACENT TO NEW CONNECTION.
15. INSTALL 14" BUTTERFLY VALVE, FExFE, WITH VALVE BOX AND RISER PER RIALTO STANDARD RW-718-0. SEE DETAIL 2 DRAWING C-19.
16. INSTALL 14" DUCTILE IRON PIPE.
17. INSTALL 14"-90° DUCTILE IRON BEND, MJxMJ, WITH THRUST BLOCK PER RIALTO STANDARD NO. RW-722-0. SEE DETAIL 1 DRAWING C-19.
18. INSTALL 14"-90° STEEL BEND, FExPE.
19. INSTALL 14" STEEL PIPE, SCH 40.
20. INSTALL 10" STEEL FLANGED OUTLET.
21. INSTALL 10" BUTTERFLY VALVE, FExFE.
22. INSTALL FILTERS PER SHEET M-9, MAXLINE MBF HD.
23. INSTALL 24"x14" FULL WRAP TAPPING SLEEVE, FE.
24. INSTALL 24" BUTTERFLY VALVE, FExFE, WITH VALVE BOX AND RISER PER RIALTO STANDARD RW-718-0. SEE DETAIL 2 DRAWING C-19.
25. INSTALL 14"-90° STEEL BEND, PExPE.
26. INSTALL 14" SLIP-ON WELDING FLANGE.
27. INSTALL 14" BLIND FLANGE.
28. INSTALL 14"x12" STEEL REDUCER, FExFE.
29. INSTALL 12" WAFER CHECK VALVE, CLA-VAL MODEL 582.
30. INSTALL 4" STEEL PIPE, SCH 40.
31. INSTALL 8"x8"x8" STEEL TEE, PExPExPE.
32. INSTALL 14"x14"x14" STEEL TEE, PExPExPE.
33. INSTALL 14"x8" STEEL REDUCER, PExFE.
34. INSTALL 8"-90° STEEL BEND, PExPE.
35. INSTALL 8" DOUBLE CHECK BACKFLOW PREVENTION ASSEMBLY, FEBCO MODEL LF850.
36. INSTALL 8" ULTRA MAG FLOW METER, FExFE.
37. INSTALL 8" DUCTILE IRON PIPE, CLASS 350.
38. INSTALL 8"x8"x8" DUCTILE IRON TEE, MJxFExFE, WITH THRUST BLOCK PER RIALTO STANDARD NO. RW-722-0. SEE DETAIL 1 DRAWING C-19.
39. INSTALL 8"-90° DUCTILE IRON BEND, MJxMJ, WITH THRUST BLOCK PER RIALTO STANDARD NO. RW-722-0. SEE DETAIL 1 DRAWING C-19.
40. INSTALL PIPE BOLLARD PER DETAIL 2 ON DRAWING C-2.
41. INSTALL 8" STEEL PIPE, SCH 40.
42. INSTALL PRESSURE GAUGE PER DETAIL 2 ON DRAWING M-6.
43. INSTALL DIFFERENTIAL PRESSURE TRANSMITTER, SEE SPECS FOR MAKE AND MODEL.
44. INSTALL 2" HALF-COUPLING, NYLON BUSHING, SS 1/2" NIPPLES, 1/2" BALL VALVE, AND SS 1/2" END CAP FOR SAMPLING.
45. INSTALL 1" THREAD-O-LET AND 1" COPPER PIPING FOR DIFFERENTIAL PRESSURE TRANSMITTER.
46. INSTALL 14" BUTTERFLY VALVE, FExFE.
47. INSTALL 14" STEEL TEE, FExPExPE.
48. INSTALL 8" RESILIENT WEDGE GATE VALVE, FExMJ, WITH VALVE BOX AND RISER PER RIALTO STANDARD RW-718-0. SEE DETAIL 1 DRAWING C-19.
49. INSTALL 8" RESILIENT WEDGE GATE VALVE, MJxMJ, WITH VALVE BOX AND RISER PER RIALTO STANDARD RW-718-0. SEE DETAIL 1 DRAWING C-19.
50. INSTALL 8"x8"x4" DUCTILE IRON TEE, MJxMJxFE, WITH THRUST BLOCK PER RIALTO STANDARD NO. RW-722-0. FOR PORTABLE FILTER CONNECTION RISER PER DETAIL 1 ON DRAWING M-2.
51. INSTALL 1" TYPE "K" COPPER TUBING, 66" MIN COVER.
52. INSTALL 1" TAP WITH BALL VALVE PER DETAIL 5 DRAWING M-10.
53. INSTALL 16" WAFER CHECK VALVE, BRAY CHECK RITE. MODEL 210, CLASS 300.
54. INSTALL 16" SLIP-ON WELDING FLANGE.
55. INSTALL 8"-90° STEEL BEND, FExPE.
56. INSTALL FLOW TRANSMITTER MOUNTED ON UNISTRUT RACK 3'-0" ABOVE FINISHED SURFACE.

NOTES:

1. ALL STEEL PIPE AND FITTINGS ABOVE GROUND SHALL BE CML AND FUSION EPOXY PAINTED.
2. ALL STEEL PIPE AND FITTINGS BELOW GROUND SHALL BE CML AND CMC TO 2" ABOVE GRADE.
3. ALL STEEL PIPE AND FITTINGS WILL BE SCH. 40, FLANGES SHALL BE CLASS 150, PER SPECIFICATIONS.
4. ALL JOINTS TO BE FULLY WELDED.
5. ANY DAMAGED FENCE SHALL BE REPLACED IN KIND.
6. POINT OF CONNECTION FOR CONTINGENT POTENTIAL FUTURE SYSTEM EXPANSION. BOOSTER PUMP (BP-3), BAG FILTERS, GAC AND IX VESSELS. BP-3 TO BE LOCATED ADJACENT TO BP-1, BP-2; LOCATION OF TREATMENT EQUIPMENT TO BE DETERMINED.
7. POTHOLE ALL POINTS OF CONNECTION AND EVERY CONFLICTING UTILITY PRIOR TO ANY WORK. PROVIDE A POTHOLE REPORT IDENTIFYING DEPTH TO TOP AND BOTTOM OF CONFLICT, MATERIAL OF UTILITY AND TYPE OF UTILITY 3 WEEKS IN ADVANCE OF ANY WORK. HORIZONTAL AND VERTICAL LOCATION OF CONFLICT SHALL BE SURVEYED AT POINTS OF CONNECTION AND POINTS OF CROSSING AND SHALL BE INCLUDED IN THE REPORT.
8. INSTALLATION OF PROPOSED COUNTY FILTERS TO BE DETERMINED. ENGINEER WILL DIRECT CONTRACTOR PRIOR TO START OF CONSTRUCTION.
9. CONTRACTOR SHALL PROVIDE MINIMUM A WEEK OF PRE-NOTICE FOR TIE-INTO EXISTING PIPE LINES. ALL TIE-IN SHALL BE INSPECTED BY ENGINEERING IN RECORD.
10. INSTALL INSULATING FLANGES KITS AT CONNECTION LOCATIONS OF DISSIMILAR METAL PIPES.

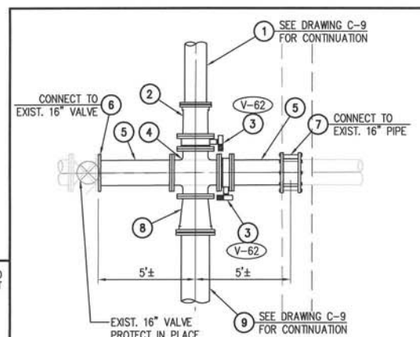

PIPE CONNECTION DETAIL 1 —

SCALE: 1/4" = 1'-0"

CONSTRUCTION NOTES: (THIS DETAIL ONLY)

1. INSTALL 14" DUCTILE IRON PIPE, CLASS 350.
2. INSTALL 16"x14" DUCTILE IRON REDUCER, FExMJ.
3. INSTALL 16" BUTTERFLY VALVE, FExFE, WITH VALVE BOX AND RISER PER RIALTO STANDARD RW-718-0. SEE DETAIL 2 DRAWING C-19.
4. INSTALL 16"x16"x16"x16" DUCTILE IRON CROSS, FExFExFExFE.
5. INSTALL 16" DUCTILE IRON SPOOL, FExPE.
6. INSTALL DUCTILE IRON PIPE FLANGE ADAPTER.
7. INSTALL 16" RESTRAINED TRANSITION COUPLING.
8. INSTALL 18"x16" DUCTILE IRON REDUCER, MJxFE.
9. INSTALL 18" DUCTILE IRON PIPE, CLASS 350.

GRAPHIC SCALE 10' 0 10' 20'

DIAL 811 DIGALERT — UNDERGROUND SERVICE ALERT — PLAY IT SAFE. DIAL BEFORE YOU DIG! — AT LEAST TWO WORKING DAYS PRIOR TO EXCAVATING

REV	DATE	REVISION	APPR'D	REV BY

REGISTERED PROFESSIONAL ENGINEER — CHRISTOPHER SHEM HAWES — Exp. 6/30/2014 — No. 69578 — CIVIL — STATE OF CALIFORNIA — 12/18/14

PLANS PREPARED BY:

General Civil, Transportation, Municipal, Water and Wastewater Engineering, Planning, Construction Management, and Surveying

118 West Lime Avenue
Monrovia, Ca. 91016
Phone: (626) 357-0588
Fax: (626) 303-7957

CIVILTEC engineering inc.
Monrovia • Prescott • Phoenix

ERM

GROUNDWATER EXTRACTION AND TREATMENT SYSTEM COMBINED REMEDY SOURCE AREA OPERABLE UNIT, ROCKETS, FIREWORKS, AND FLARES SUPERFUND SITE

SCALE	AS SHOWN	DESIGNED BY	JM/BS/BD/CD	DRAWN BY	JM/BS/CD	DRAWING NUMBER	
DATE	SCALE	CHECKED	BD/CSH	APPROVED		JOB NUMBER	2013175.00

REV

SHEET 39

TREATMENT PLANT MECHANICAL PIPING PLAN

DISCIPLINE NO. M-1

ENVIRONMENTAL RESOURCES MANAGEMENT

X:\2013\2013175.00-ERM-RIALTO TREATMENT PLANT EXPANSION\DWG\TREATMENT PLANT\2013175.00 RIALTO-SHT39 M-1 TREATMENT PLANT MECHANICAL

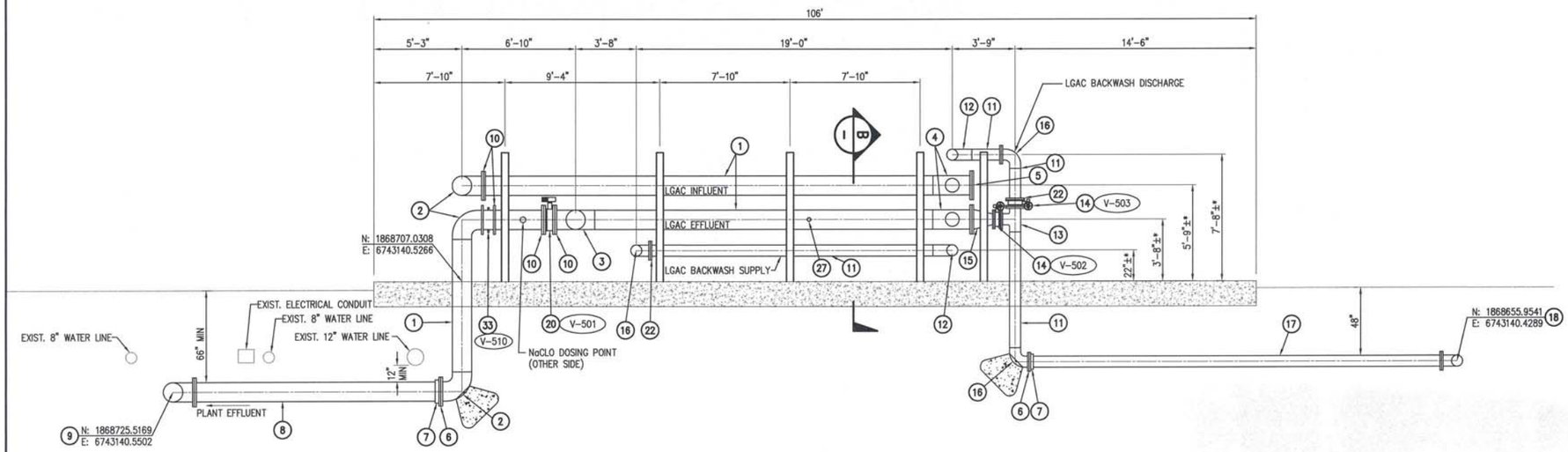

SECTION A / M-1
SCALE: 1/4"=1'-0"

* DISTANCE PER GAC TANK MANUFACTURER'S SPECIFICATIONS.

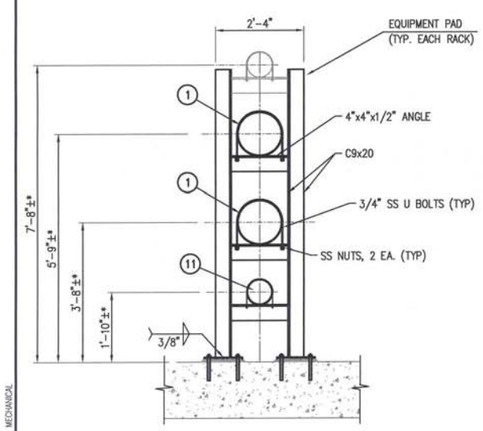

TYPICAL PIPE RACK SECTION B / M-1
SCALE: 1/2"=1'-0"

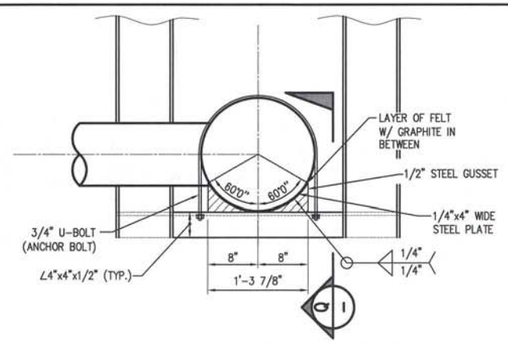

PIPE SUPPORT DETAIL R
NOT TO SCALE

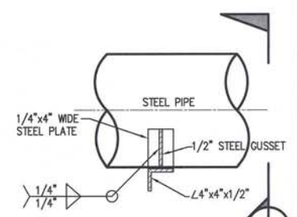

SECTION Q
NOT TO SCALE

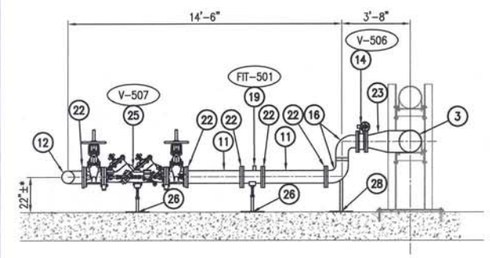

SECTION C
SCALE: 1/4"=1'-0"

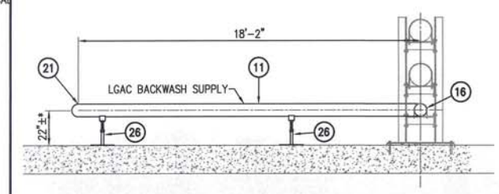

SECTION D
SCALE: 1/4"=1'-0"

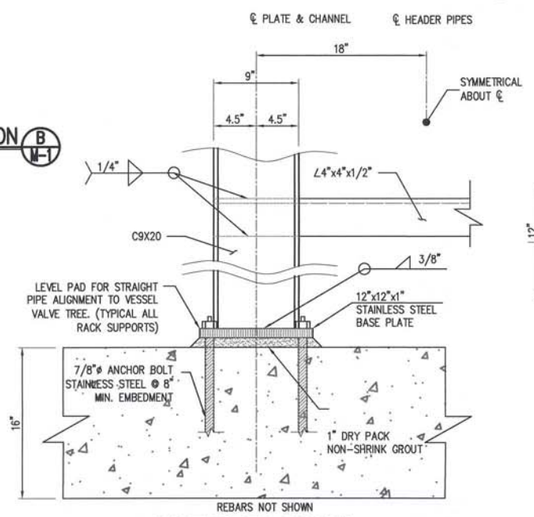

BASE PLATE SECTION
NOT TO SCALE

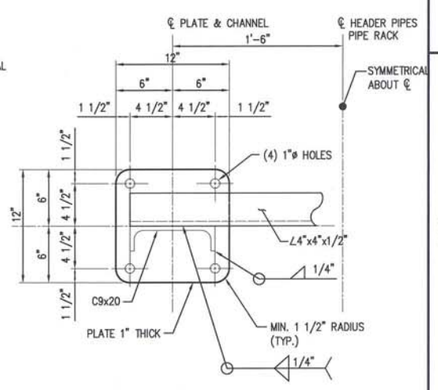

BASE PLATE PLAN
NOT TO SCALE

CONSTRUCTION NOTES: (THIS SHEET ONLY)

1. INSTALL 14" STEEL PIPE, SCH 40.
2. INSTALL 14"-90° STEEL BEND, FExPE.
3. INSTALL 14"x14"x14" STEEL TEE, PExPExPE.
4. INSTALL 14"x14"x12"x12" STEEL CROSS, FExPExPExPE.
5. INSTALL 14" BLIND FLANGE.
6. INSTALL FLANGE ISOLATION KIT PER DETAIL 3 ON DRAWING M-12.
7. INSTALL DUCTILE IRON PIPE FLANGE ADAPTER.
8. INSTALL 14" DUCTILE IRON PIPE.
9. INSTALL 14"-90° DUCTILE IRON BEND, MJxMJ, WITH THRUST BLOCK PER RIALTO STANDARD NO. RW-722-0. SEE DETAIL 1 DRAWING C-19.
10. INSTALL 14" SLIP-ON WELDING FLANGE.
11. INSTALL 8" STEEL PIPE, SCH 40.
12. INSTALL 8"x8"x8" STEEL TEE, PExPExPE.
13. INSTALL 8"x8"x8" STEEL TEE, PExFExFE.
14. INSTALL 8" BUTTERFLY VALVE, FExFE.
15. INSTALL 14"x8" STEEL REDUCER, FExFE.
16. INSTALL 8"-90° STEEL BEND, FExPE.
17. INSTALL 8" DUCTILE IRON PIPE, CLASS 350.
18. INSTALL 8"-90° DUCTILE IRON BEND, MJxMJ, WITH THRUST BLOCK PER RIALTO STANDARD NO. RW-722-0. SEE DETAIL 1 DRAWING C-19.
19. INSTALL 8" MAG FLOW METER, FExFE.
20. INSTALL 14" BUTTERFLY VALVE, FExFE.
21. INSTALL 8"-90° STEEL BEND, PExPE.
22. INSTALL 8" SLIP-ON WELDING FLANGE.
23. INSTALL 14"x8" STEEL REDUCER, PExFE.
24. INSTALL 8"-90° STEEL BEND, PExPE.
25. INSTALL 8" DOUBLE CHECK BACKFLOW PREVENTION ASSEMBLY.
26. INSTALL ADJUSTABLE PIPE SUPPORT PER DETAIL 4 ON DRAWING M-6.
27. INSTALL 2" HALF-COUPLING, NYLON BUSHING, SS 1/2" NIPPLES, 1/2" BALL VALVE, AND SS 1/2" END CAP FOR SAMPLING.
28. INSTALL PIPE ELBOW SUPPORT PER DETAIL 1 DRAWING M-3.
29. INSTALL 4" 1/4 TURN BALL VALVE, MPTxMPT.
30. INSTALL 4" STEEL SPOOL, SCH 80, FExMPT.
31. INSTALL 4"-90° STEEL BEND, FPTxFPT.
32. INSTALL 8"x8"x4" DUCTILE IRON TEE, MJxMJxFE.
33. INSTALL 14" WAFER CHECK VALVE, BRAY CHECK RITE, MODEL 210 CLASS 300.

NOTES:

1. ALL STEEL PIPE AND FITTINGS ABOVE GROUND SHALL BE CML AND FUSION EPOXY PAINTED.
2. ALL STEEL PIPE AND FITTINGS BELOW GROUND SHALL BE CML AND CMC TO 2" ABOVE GRADE.
3. ALL STEEL PIPE AND FITTINGS WILL BE SCH. 40, FLANGES SHALL BE CLASS 150, PER SPECIFICATIONS.
4. ALL JOINTS TO BE FULLY WELDED.
5. ANY DAMAGED FENCE SHALL BE REPLACED IN KIND.
6. POTHOLE ALL POINTS OF CONNECTION AND EVERY CONFLICTING UTILITY PRIOR TO ANY WORK. PROVIDE A POTHOLE REPORT IDENTIFYING DEPTH TO TOP AND BOTTOM OF CONFLICT, MATERIAL OF UTILITY AND TYPE OF UTILITY 3 WEEKS IN ADVANCE OF ANY WORK. HORIZONTAL LAND VERTICAL LOCATION OF CONFLICT SHALL BE SURVEYED AT POINTS OF CONNECTION AND POINTS OF CROSSING AND SHALL BE INCLUDED IN THE REPORT.

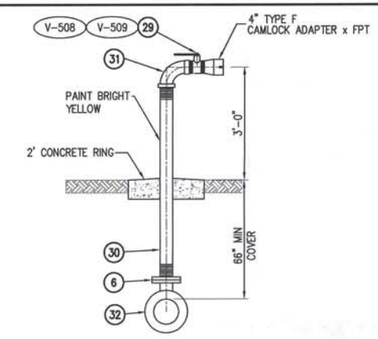

PIPE CONNECTION SECTION 1 / M-1
SCALE: 1/4"=1'-0"

NOTES:

1. FIELD VERIFY ANCHOR BOLT SIZE AND LOCATION WITH EQUIPMENT VENDORS PRIOR TO INSTALLATION.
2. ALL ANCHORS SHALL BE 7/8" STAINLESS STEEL THREADED RODA WITH HILTI RE-500 EPOXY. ALL ANCHORS SHALL BE INSTALLED IN ACCORDANCE WITH HILTI'S RECOMMENDATIONS AND ICC ESR-2322.
3. ALL EXPOSED STEEL ELEMENTS SHALL BE EPOXY COATED UNLESS OTHERWISE NOTED.
4. DEPUTY INSPECTION IS REQUIRED FOR THE INSTALLATION OF EPOXY ANCHORS.

DIAL 811
DIGALERT
UNDERGROUND SERVICE ALERT
PLAY IT SAFE. DIAL BEFORE YOU DIG!
AT LEAST TWO WORKING DAYS PRIOR TO EXCAVATING

REV	DATE	REVISION	APPR'D	REV BY

REGISTERED PROFESSIONAL ENGINEER
CHRISTOPHER
DREW HAWES
Exp. 6/30/2014
No. 69578
CIVIL
STATE OF CALIFORNIA
6/18/14

PLANS PREPARED BY:
General Civil, Transportation, Municipal, Water and Wastewater Engineering, Planning, Construction Management, and Surveying
118 West Lime Avenue
Monrovia, Ca. 91016
Phone: (626) 357-0588
Fax: (626) 303-7957
CIVILTEC engineering inc.
Monrovia • Prescott • Phoenix
ERM

GROUNDWATER EXTRACTION AND TREATMENT SYSTEM COMBINED REMEDY SOURCE AREA OPERABLE UNIT, ROCKETS, FIREWORKS, AND FLARES SUPERFUND SITE

SCALE	AS SHOWN	DESIGNED BY	JM/BS/BD/CD	DRAWN BY	JM/BS/CD	DRAWING NUMBER	
DATE	SCALE	CHECKED	BD/CSH	APPROVED		JOB NUMBER	20131175.00

REV

SHEET 40

DISCIPLINE NO. M-2

TREATMENT PLANT MECHANICAL PIPING SECTIONS

ENVIRONMENTAL RESOURCES MANAGEMENT

X:\2013\20131175.00-ERM-RIALTO TREATMENT PLANT EXPANSION\DWG\TREATMENT PLANT\20131175.00 RIALTO-SHT40 M-2 TREATMENT PLANT MECHANICAL

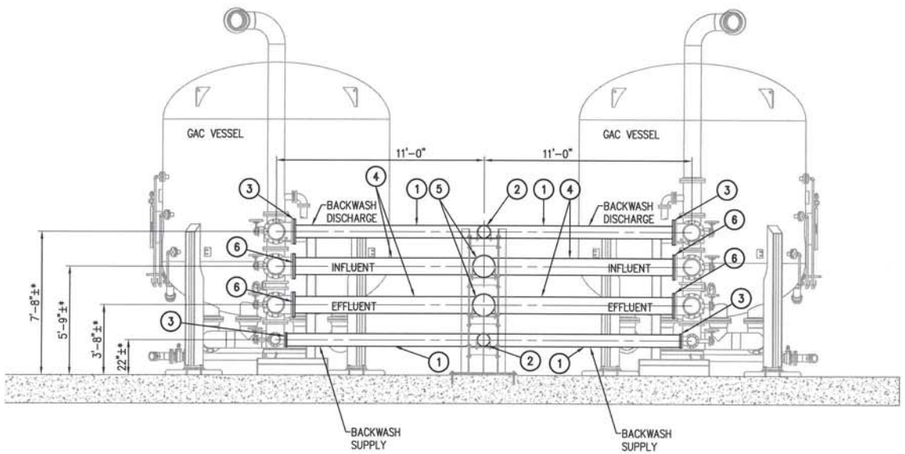

SECTION E/M-1
SCALE: 1/4"=1'-0"

ELBOW	DIMENSION IN INCHES			
'A' DIA	'B' DIA	'C' THICK	'D' SQ	'E' DIA
4	2	3/8	6	5/9
6	2 1/2	3/8	7	5/8
8	4	1/2	9	5/8
10	4	1/2	9	5/8
12	6	1/2	11	3/4
14	6	1/2	11	3/4
16	6	1/2	11	5/8
18	8	1/2	11	3/4
20	8	1/2	13 1/2	3/4
24	8	1/2	13 1/2	3/4
30	10	3/4	16	7/8
36	12	3/4	9	7/8
42	16	3/4	23 1/2	1/
48	18	3/4	25	1 1/8

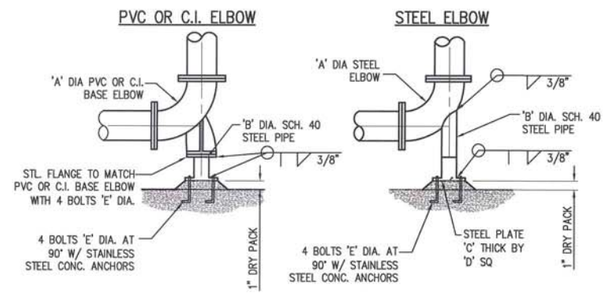

PIPE ELBOW SUPPORT 1/M-3
NOT TO SCALE

CONSTRUCTION NOTES: (THIS SHEET ONLY)

1. INSTALL 8" STEEL PIPE, SCH 40.
2. INSTALL 8"x8"x8" STEEL TEE, PExPExPE.
3. INSTALL 8" SLIP-ON WELDING FLANGE.
4. INSTALL 12" STEEL PIPE, SCH 40.
5. INSTALL 14"x14"x12"x12" STEEL CROSS, FExPExPExPE.
6. INSTALL 12" SLIP-ON WELDING FLANGE.
7. INSTALL 12"-90° STEEL BEND, PExPE.
8. INSTALL 12" STEEL SPOOL FExFE WITH 8" FLANGED OUTLET AND 12" BLIND FLANGE.
9. INSTALL 8"-90° STEEL BEND, PExPE.
10. INSTALL 14"-90° STEEL BEND, FExPE.
11. INSTALL 14" STEEL PIPE, SCH 40.
12. INSTALL 14"x12" STEEL REDUCER, FExFE.
13. INSTALL 10" STEEL FLANGED NOZZLE.
14. INSTALL 10" BUTTERFLY VALVE, FExFE.
15. INSTALL ADJUSTABLE PIPE SUPPORT PER DETAIL 4 DRAWING M-6.
16. INSTALL 14"-90° STEEL BEND, PExPE.
17. INSTALL 14"x12" STEEL REDUCER, PExFE.
18. INSTALL 12"-90° STEEL BEND, PExFE.
19. INSTALL 12"x12"x12" STEEL TEE, FExFExFE.
20. INSTALL 12" BUTTERFLY VALVE, FExFE.
21. INSTALL 14" UV DISINFECTION SYSTEM, FExFE, SIEMENS BARRIER M 2600.
22. INSTALL FLANGE ISOLATION KIT PER DETAIL 3 DRAWING M-12.
23. INSTALL DUCTILE IRON PIPE FLANGE ADAPTER.
24. INSTALL 8" DUCTILE IRON PIPE, CLASS 350.
25. INSTALL PIPE ELBOW SUPPORT PER DETAIL 1 DRAWING M-3.
26. INSTALL 2" HALF-COUPLING, NYLON BUSHING, SS 1/2" NIPPLES, 1/2" BALL VALVE, AND SS 1/2" END CAP FOR SAMPLING.
27. INSTALL 14" SLIP-ON WELDING FLANGE.

NOTE:

1. ALL STEEL PIPE AND FITTINGS ABOVE GROUND SHALL BE CML AND FUSION EPOXY PAINTED.
2. ALL STEEL PIPE AND FITTINGS BELOW GROUND SHALL BE CML AND CMC TO 2" ABOVE GRADE.
3. ALL STEEL PIPE AND FITTINGS WILL BE SCH. 40, FLANGES SHALL BE CLASS 150, PER SPECIFICATIONS.
4. ALL JOINTS TO BE FULLY WELDED.
5. ANY DAMAGED FENCE SHALL BE REPLACED IN KIND.
6. POTHOLE ALL POINTS OF CONNECTION AND EVERY CONFLICTING UTILITY PRIOR TO ANY WORK. PROVIDE A POTHOLE REPORT IDENTIFYING DEPTH TO TOP AND BOTTOM OF CONFLICT, MATERIAL OF UTILITY AND TYPE OF UTILITY 3 WEEKS IN ADVANCE OF ANY WORK. HORIZONTAL AND VERTICAL LOCATION OF CONFLICT SHALL BE SURVEYED AT POINTS OF CONNECTION AND POINTS OF CROSSING AND SHALL BE INCLUDED IN THE REPORT.

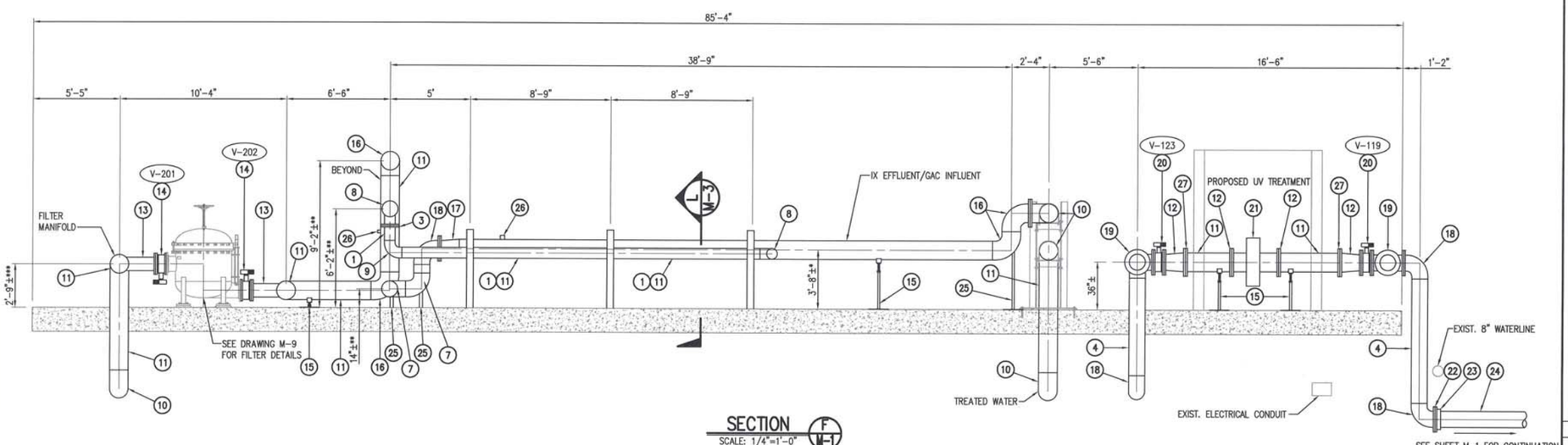

SECTION F/M-1
SCALE: 1/4"=1'-0"

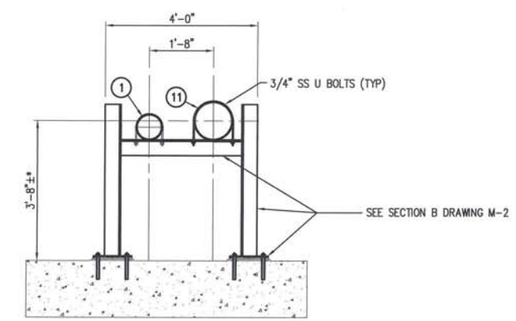

SECTION L/M-
SCALE: 1/2"=1'-0"

* PER GAC TANK MANUFACTURER'S SPECIFICATIONS
** PER IX VESSEL MANUFACTURER'S RECOMMENDATIONS
*** PER FILTER MANUFACTURER'S RECOMMENDATIONS

DIAL 811
DIGALERT
UNDERGROUND SERVICE ALERT
PLAY IT SAFE. DIAL BEFORE YOU DIG!
AT LEAST TWO WORKING DAYS PRIOR TO EXCAVATING

REGISTERED PROFESSIONAL ENGINEER CHRISTOPHER BREM HAWES Exp. 6/30/2014 No. 69578 CIVIL STATE OF CALIFORNIA
6/18/14

PLANS PREPARED BY:
General Civil, Transportation, Municipal, Water and Wastewater Engineering, Planning, Construction Management, and Surveying
118 West Lime Avenue
Monrovia, Ca. 91016
Phone: (626) 357-0588
Fax: (626) 303-7957
CIVILTEC engineering inc.
Monrovia • Prescott • Phoenix
ERM

REV	DATE	REVISION	APPR'D	REV BY

GROUNDWATER EXTRACTION AND TREATMENT SYSTEM COMBINED REMEDY SOURCE AREA OPERABLE UNIT, ROCKETS, FIREWORKS, AND FLARES SUPERFUND SITE

SCALE	AS SHOWN	DESIGNED BY	JM/BS/BD/CD	DRAWN BY	JM/BS/CD	DRAWING NUMBER	
DATE	SCALE	CHECKED	BD/CSH	APPROVED		JOB NUMBER	2013175.00

REV
SHEET 41
DISCIPLINE NO. M-3

TREATMENT PLANT MECHANICAL PIPING SECTIONS

ENVIRONMENTAL RESOURCES MANAGEMENT

X:\2013\2013175.00-ERM-RALTO TREATMENT PLANT EXPANSION\DWG\TREATMENT PLANT\2013175.00 RALTO-SHT41 M-3 TREATMENT PLANT MECHANICAL

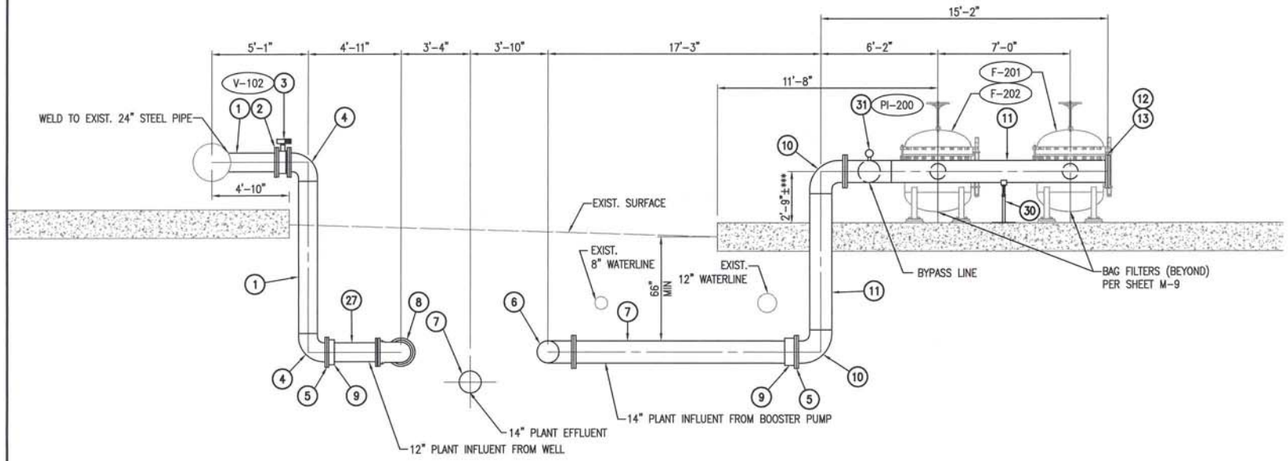

SECTION H M-1
SCALE: 1/4"=1'-0"

*** PER FILTER MANUFACTURER'S RECOMMENDATIONS

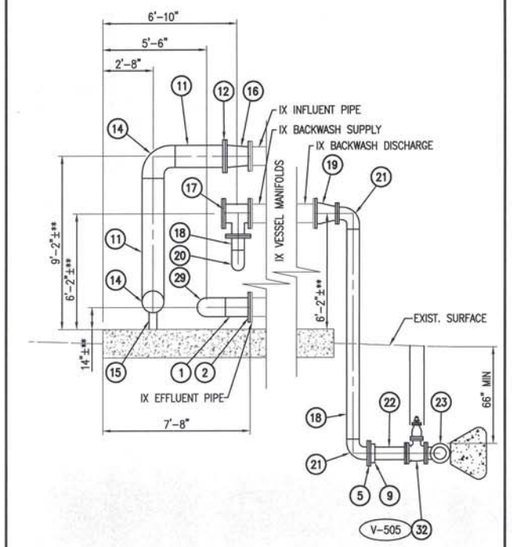

SECTION J M-1
SCALE: 1/4"=1'-0"

** PER IX VESSEL MANUFACTURER'S RECOMMENDATIONS

CONSTRUCTION NOTES: (THIS SHEET ONLY)

1. INSTALL 12" STEEL PIPE, SCH 40.
2. INSTALL 12" SLIP-ON WELDING FLANGE.
3. INSTALL 12" WAFER CHECK VALVE, CLA-VAL MODEL 582.
4. INSTALL 12"-90° STEEL BEND, FExPE.
5. INSTALL FLANGE ISOLATION KIT PER DETAIL 3 DRAWING M-12.
6. INSTALL 14"-90° DUCTILE IRON BEND, MJxMJ, WITH THRUST BLOCK PER RIALTO STANDARD NO. RW-722-0. SEE DETAIL 1 DRAWING C-19.
7. INSTALL 14" DUCTILE IRON PIPE, CLASS 350.
8. INSTALL 12"-90° DUCTILE IRON BEND, MJxMJ, WITH THRUST BLOCK PER RIALTO STANDARD NO. RW-722-0. SEE DETAIL 1 DRAWING C-19.
9. INSTALL DUCTILE IRON PIPE FLANGE ADAPTER.
10. INSTALL 14"-90° STEEL BEND, FExPE.
11. INSTALL 14" STEEL PIPE, SCH 40.
12. INSTALL 14" SLIP-ON WELDING FLANGE.
13. INSTALL 14" BLIND FLANGE.
14. INSTALL 14"-90° STEEL BEND, PExPE.
15. INSTALL PIPE ELBOW SUPPORT PER DETAIL 1 DRAWING M-3.
16. INSTALL 14"x12" STEEL REDUCER, FExFE.
17. INSTALL 12" STEEL SPOOL FExFE WITH 8" FLANGED OUTLET AND 12" BLIND FLANGE.
18. INSTALL 8" STEEL PIPE, SCH 40.
19. INSTALL 12"x8" STEEL REDUCER, FExFE.
20. INSTALL 8"-90° STEEL BEND, PExPE.
21. INSTALL 8"-90° STEEL BEND, FExPE.
22. INSTALL 8" DUCTILE IRON PIPE.
23. INSTALL 8"x8"x8" DUCTILE IRON TEE, MJxMJxFE, WITH THRUST BLOCK PER RIALTO STANDARD NO. RW-722-0. SEE DETAIL 1 DRAWING C-19.
24. INSTALL 14" BUTTERFLY VALVE, FExMJ, WITH VALVE BOX AND RISER PER RIALTO STANDARD RW-718-0.
25. INSTALL 24"x24"x14" STEEL TEE, FExFExFE.
26. INSTALL 12"-90° DUCTILE IRON BEND, MJxMJ, WITH THRUST BLOCK PER RIALTO STANDARD NO. RW-722-0. SEE DETAIL 1 DRAWING C-19.
27. INSTALL 12" DUCTILE IRON PIPE.
28. INSTALL 12"x12"x12" STEEL TEE, FExFExFE.
29. INSTALL 12"-90° STEEL BEND, PExPE.
30. INSTALL ADJUSTABLE PIPE SUPPORT PER DETAIL 4 DRAWING M-6.
31. INSTALL PRESSURE GAUGE PER DETAIL 2 DRAWING M-6.
32. INSTALL 8" RESILIENT WEDGE GATE VALVE, FExMJ, WITH VALVE BOX AND RISER PER RIALTO STANDARD RW-718-0. SEE DETAIL 2 DRAWING C-19.
33. INSTALL PRESSURE GAUGE PER DETAIL 2 ON DRAWING M-6.
34. INSTALL 14"x14"x14" STEEL TEE, FExPExPE.
35. INSTALL 24" BUTTERFLY VALVE, FExFE, WITH VALVE BOX AND RISER PER RIALTO STANDARD RW-718-0. SEE DETAIL 2 DRAWING C-19.
36. INSTALL 24" STEEL SPOOL, SCH 40, FExPE.
37. INSTALL 24" RESTRAINED TRANSITION COUPLING.
38. INSTALL 24" SLIP-ON WELDING FLANGE.

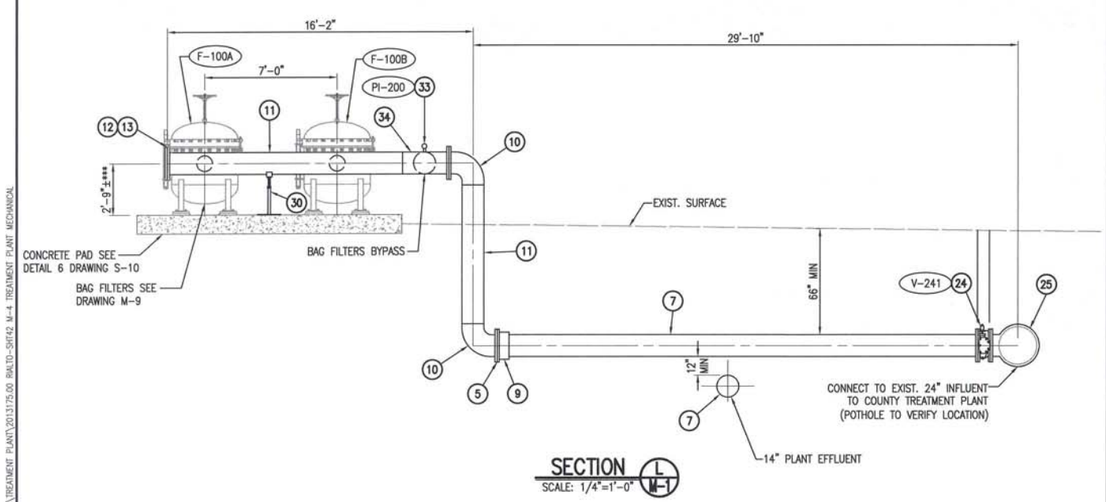

SECTION L M-1
SCALE: 1/4"=1'-0"

*** PER FILTER MANUFACTURER'S RECOMMENDATIONS

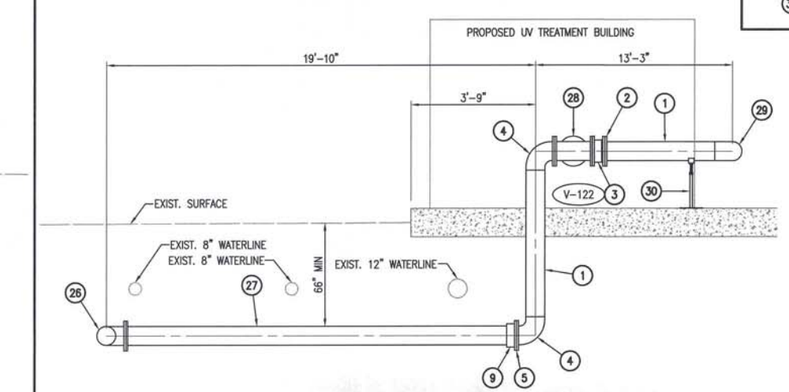

SECTION K M-1
SCALE: 1/4"=1'-0"

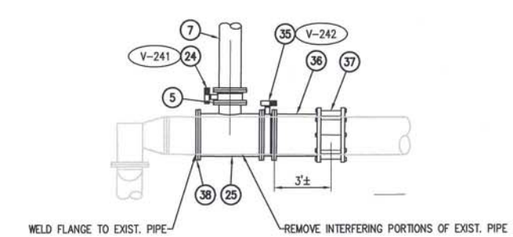

DETAIL 1 M-1
SCALE: 1/4"=1'-0"

NOTES:

1. ALL STEEL PIPE AND FITTINGS ABOVE GROUND SHALL BE CML AND FUSION EPOXY PAINTED.
2. ALL STEEL PIPE AND FITTINGS BELOW GROUND SHALL BE CML AND CMC TO 2" ABOVE GRADE.
3. ALL STEEL PIPE AND FITTINGS WILL BE SCH. 40, FLANGES SHALL BE CLASS 150, PER SPECIFICATIONS.
4. ALL JOINTS TO BE FULLY WELDED.
5. ANY DAMAGED FENCE SHALL BE REPLACED IN KIND.
6. POTHOLE ALL POINTS OF CONNECTION AND EVERY CONFLICTING UTILITY PRIOR TO ANY WORK. PROVIDE A POTHOLE REPORT IDENTIFYING DEPTH TO TOP AND BOTTOM OF CONFLICT, MATERIAL OF UTILITY AND TYPE OF UTILITY 3 WEEKS IN ADVANCE OF ANY WORK. HORIZONTAL AND VERTICAL LOCATION OF CONFLICT SHALL BE SURVEYED AT POINTS OF CONNECTION AND POINTS OF CROSSING AND SHALL BE INCLUDED IN THE REPORT.

DIAL 811
DIGALERT
UNDERGROUND SERVICE ALERT
PLAY IT SAFE. DIAL BEFORE YOU DIG!
AT LEAST TWO WORKING DAYS PRIOR TO EXCAVATING

REV	DATE	REVISION	APPR'D	REV BY

REGISTERED PROFESSIONAL ENGINEER CHRISTOPHER RHEM HAWES Exp. 6/30/2014 No. 69578 CIVIL STATE OF CALIFORNIA 6/18/14

PLANS PREPARED BY:
General Civil, Transportation, Municipal, Water and Wastewater Engineering, Planning, Construction Management, and Surveying
118 West Lime Avenue
Monrovia, Ca. 91016
Phone: (626) 357-0588
Fax: (626) 303-7957
CIVILTEC engineering inc.
Monrovia • Prescott • Phoenix
ERM

GROUNDWATER EXTRACTION AND TREATMENT SYSTEM COMBINED REMEDY SOURCE AREA OPERABLE UNIT, ROCKETS, FIREWORKS, AND FLARES SUPERFUND SITE

SCALE	AS SHOWN	DESIGNED BY	JM/BS/BD/CD	DRAWN BY	JM/BS/CD	DRAWING NUMBER	
DATE	SCALE	CHECKED	BD/CSH	APPROVED		JOB NUMBER	20131750.00

REV

SHEET 42

DISCIPLINE NO. M-4

TREATMENT PLANT MECHANICAL PIPING SECTIONS

ENVIRONMENTAL RESOURCES MANAGEMENT

X:\2013\20131750.00-ERM-RIALTO TREATMENT PLANT EXPANSION\DWG\TREATMENT PLANT\20131750.00 RIALTO-SHT42 M-4 TREATMENT PLANT MECHANICAL

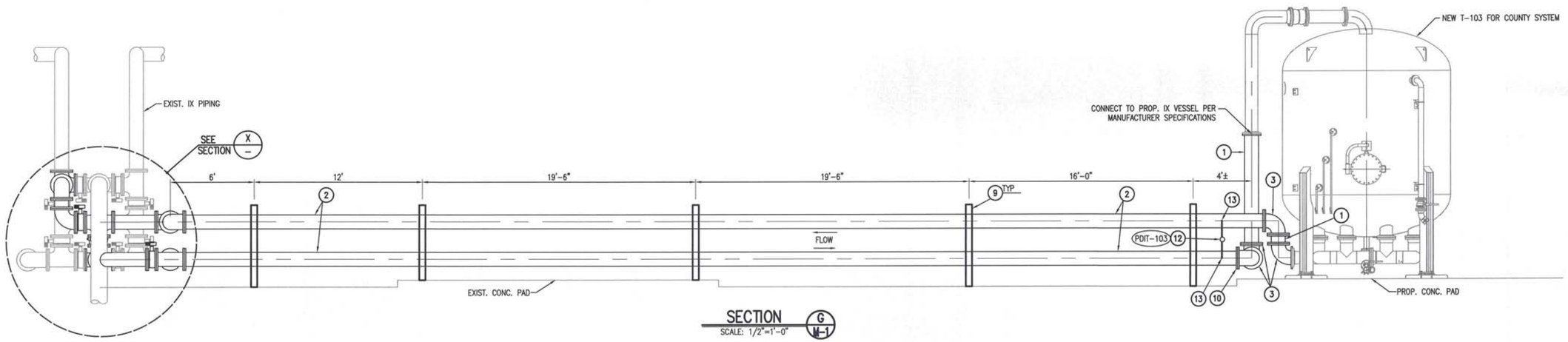

SECTION G M-1
SCALE: 1/2"=1'-0"

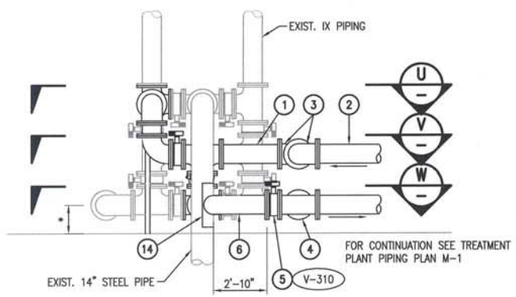

SECTION X
SCALE: 1/2"=1'-0"

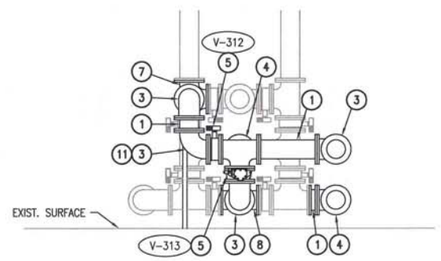

SECTION Y
SCALE: 1/2"=1'-0"

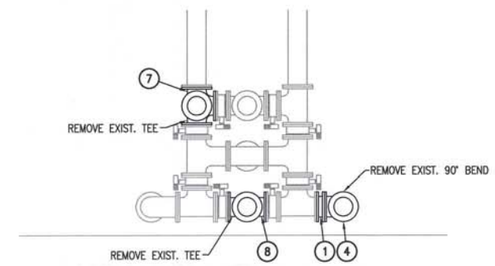

SECTION Z
SCALE: 1/2"=1'-0"

CONSTRUCTION NOTES: (THIS SHEET ONLY)

1. INSTALL 12" STEEL SPOOL, FE&FE, CML & PAINTED. (FIELD VERIFY LENGTH)
2. INSTALL 12" STEEL PIPE, CML & PAINTED.
3. INSTALL 12"-90° STEEL BEND, FExFE.
4. INSTALL 12"x12"x12" STEEL TEE, FExFExFE.
5. INSTALL 12" BUTTERFLY VALVE, FExFE.
6. INSTALL 12" STEEL WELD-ON OUTLET, FE.
7. INSTALL 12"x12"x12" TEE, WITH 12" OUTLET, FE @ 90° FROM BRANCH OUTLET.
8. INSTALL 12"x12"x12"x12" CROSS, FExFExFExFE.
9. INSTALL PIPE RACK PER DETAIL 1 DRAWING M-5.
10. INSTALL 12" SLIP-ON WELDING FLANGE.
11. INSTALL ELBOW PIPE SUPPORT PER DETAIL 1 DRAWING M-3.
12. INSTALL DIFFERENTIAL PRESSURE TRANSMITTER, SEE SPECS FOR MAKE AND MODEL.
13. INSTALL 1" THREAD-O-LET AND 1" COPPER PIPING FOR DIFFERENTIAL PRESSURE TRANSMITTER.
14. INSTALL 1/2 WRAP STEEL WELD-ON NOZZLE, 12" NOZZLE, FE.

NOTES:

1. ALL STEEL PIPE AND FITTINGS ABOVE GROUND SHALL BE CML AND FUSION EPOXY PAINTED.
2. ALL STEEL PIPE AND FITTINGS BELOW GROUND SHALL BE CML AND CMC TO 2" ABOVE GRADE.
3. ALL STEEL PIPE AND FITTINGS WILL BE SCH. 40, FLANGES SHALL BE CLASS 150, PER SPECIFICATIONS.
4. ALL JOINTS TO BE FULLY WELDED.
5. ANY DAMAGED FENCE SHALL BE REPLACED IN KIND.
6. POTHOLE ALL POINTS OF CONNECTION AND EVERY CONFLICTING UTILITY PRIOR TO ANY WORK. PROVIDE A POTHOLE REPORT IDENTIFYING DEPTH TO TOP AND BOTTOM OF CONFLICT, MATERIAL OF UTILITY AND TYPE OF UTILITY 3 WEEKS IN ADVANCE OF ANY WORK. HORIZONTAL AND VERTICAL LOCATION OF CONFLICT SHALL BE SURVEYED AT POINTS OF CONNECTION AND POINTS OF CROSSING AND SHALL BE INCLUDED IN THE REPORT.
7. PROTECT EXISTING ELECTRICAL CONDUIT. ANY CONFLICTING CONDUIT SHALL BE RELOCATED.

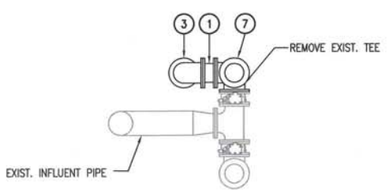

(TOP VIEW) SECTION U
SCALE: 1/2"=1'-0"

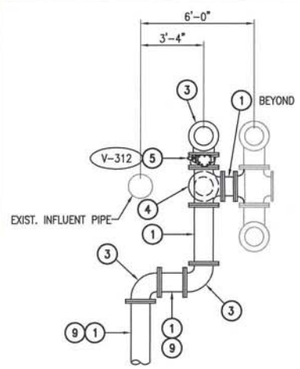

(TOP VIEW) SECTION V
SCALE: 1/2"=1'-0"

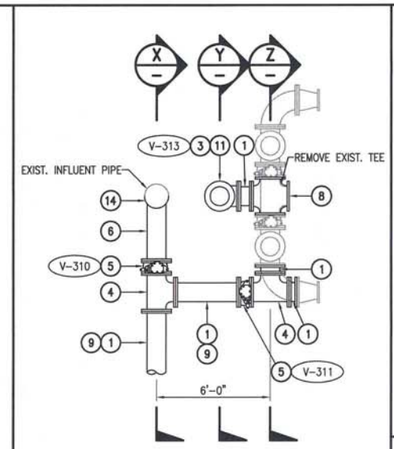

(TOP VIEW) SECTION W
SCALE: 1/2"=1'-0"

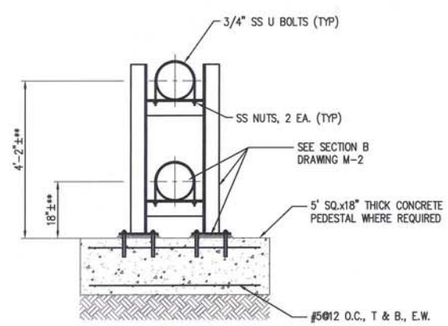

PIPE RACK DETAIL 1
SCALE: 1/2"=1'-0"

** PER IX VESSEL MANUFACTURERS RECOMMENDATIONS

DIAL 811
DIGALERT
UNDERGROUND SERVICE ALERT
PLAY IT SAFE. DIAL BEFORE YOU DIG!
AT LEAST TWO WORKING DAYS PRIOR TO EXCAVATING

REV	DATE	REVISION	APPR'D	REV BY

REGISTERED PROFESSIONAL ENGINEER CHRISTOPHER SHEM HAWES Exp. 6/30/2014 No. 69578 CIVIL STATE OF CALIFORNIA
6/18/14

PLANS PREPARED BY:
General Civil, Transportation, Municipal, Water and Wastewater Engineering, Planning, Construction Management, and Surveying
118 West Lime Avenue
Monrovia, Ca. 91016
Phone: (626) 357-0588
Fax: (626) 303-7957
CIVILTEC engineering inc.
Monrovia • Prescott • Phoenix
ERM

GROUNDWATER EXTRACTION AND TREATMENT SYSTEM COMBINED REMEDY SOURCE AREA OPERABLE UNIT, ROCKETS, FIREWORKS, AND FLARES SUPERFUND SITE

SCALE	AS SHOWN	DESIGNED BY	JM/BS/BD/CD	DRAWN BY	JM/BS/CD	DRAWING NUMBER	
DATE	SCALE	CHECKED	BD/CSH	APPROVED		JOB NUMBER	20131175.00

REV

SHEET 43

DISCIPLINE NO. M-5

TREATMENT PLANT MECHANICAL PIPING SECTIONS

ENVIRONMENTAL RESOURCES MANAGEMENT

X:\2013\20131175.00-ERM-RHALTO_TREATMENT PLANT EXPANSION\DWG\TREATMENT PLANT\20131175.00 RHALTO-SHEET43 M-5 TREATMENT PLANT MECHANICAL

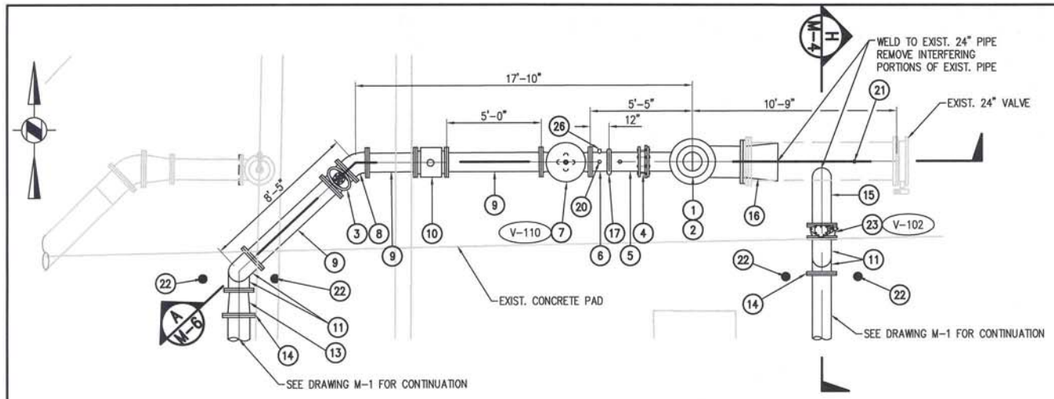

PUMP PEDESTAL PLAN VIEW

SCALE: 1/4"=1'-0"

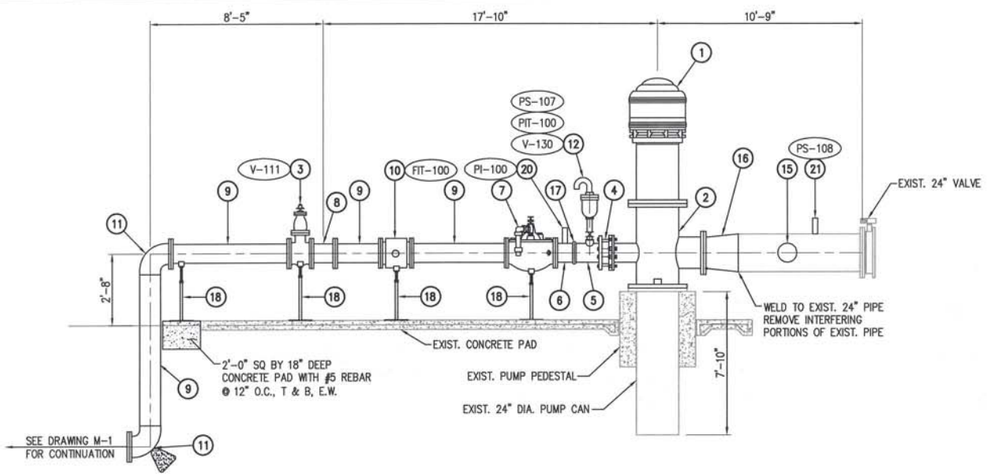

SECTION A/M-6

SCALE: 1/4"=1'-0"

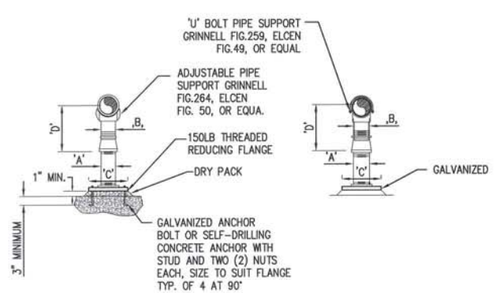

ADJUSTABLE PIPE SUPPORT DETAIL 4/M-6

NOT TO SCALE

ADJUSTABLE PIPE SUPPORT APPROXIMATE DIMENSIONS IN INCHES					
PIPE SIZE	'A'	'B'	'C'	'D' MINIMUM	'D' MAXIMUM
2-1/2	2-1/2	1-1/2	9	8	11-1/2
3	2-1/2	1-1/2	9	8-1/2	11-3/4
3-1/2	2-1/2	1-1/2	9	8-1/2	12
4	3	*2-1/2	9	10-1/4	14
6	3	*2-1/2	9	11-5/8	15-1/4
8	3	*2-1/2	9	13-5/8	16-1/2
10	3	*2-1/2	9	14-5/8	18-1/4
12	3	*2-1/2	9	15-5/8	19-3/4
14	4	3	11	18-7/8	20-3/4
16	4	3	11	19-7/8	22-1/4
18	6	3-1/2	13-1/2	21-1/4	24
20	6	3-1/2	13-1/2	23-1/4	25-1/2
24	6	4	13-1/2	26-1/2	28-1/4
30	6	4	13-1/2	29-5/8	31-1/2
32	6	4	13-1/2	30-5/8	32-3/4
36	6	4	13-1/2	32-5/8	34-3/4

* DENOTES REFERENCE TO MANUFACTURER

NOTE:

PROVIDE MINIMUM OF 24" SQUARE x 18" DEEP CONCRETE PAD WITH #5 REBAR @ 12" O.C. E.W. E.F. WHERE SLAB IS NOT AVAILABLE FOR PIPE SUPPORT.

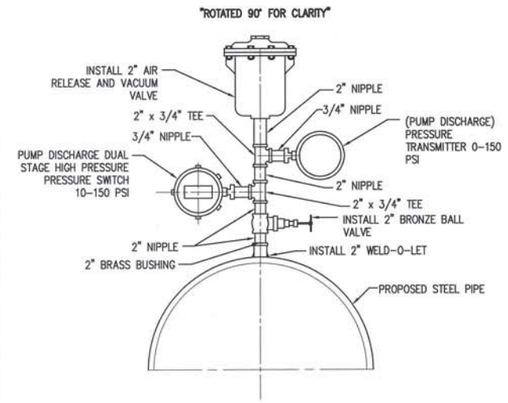

NOTE:

ALL PIPE AND FITTINGS SHALL BE SCHEDULE 80 RED BRASS AND RATED FOR 150 PSI SERVICE.

AIR RELEASE VALVE DETAIL 1/M-6

NOT TO SCALE

CONSTRUCTION NOTES: (THIS SHEET ONLY)

1. INSTALL MOTOR AND PUMP TO MATCH EXISTING MOTOR AND PUMP IN FIELD.
2. INSTALL STEEL IN-LINE VERTICAL PUMP WITH 20" SUCTION AND 12" DISCHARGE, MATCH EXISTING IN FIELD.
3. INSTALL 12" GATE VALVE, FExFE.
4. INSTALL 12" DISMANTLING JOINT.
5. INSTALL 12" STANDARD STEEL PIPE, PExVIC.
6. INSTALL 12" STANDARD STEEL PIPE, FExVIC.
7. INSTALL 12" PUMP CONTROL VALVE, FExFE, SEE SPECIFICATIONS FOR MAKE AND MODEL.
8. INSTALL 12"-45° STEEL BEND, FExFE.
9. INSTALL 12" STANDARD STEEL PIPE, FExFE.
10. INSTALL 12" MAG METER, FExFE, SEE SPECIFICATIONS FOR MAKE AND MODEL.
11. INSTALL 12"-90° STEEL BEND, FExPE.
12. INSTALL 2" AIR RELEASE & VACUUM VALVE ASSEMBLY PER DETAIL 1 DRAWING M-6.
13. INSTALL 14"x12" DUCTILE IRON REDUCER, MJxFE.
14. INSTALL FLANGE ISOLATION KIT.
15. INSTALL 12" STANDARD STEEL PIPE, PExFE.
16. INSTALL 24"x20" STEEL REDUCER, FExPE. VERIFY SIZE WITH PUMP MANUFACTURER.
17. INSTALL 12" VIC COUPLING, STYLE 75.
18. INSTALL ADJUSTABLE PIPE SUPPORT PER DETAIL 4 DRAWING M-6.
19. INSTALL 12" STANDARD STEEL PIPE, FExFE.
20. INSTALL PRESSURE GAUGE PER DETAIL 2 DRAWING M-6.
21. INSTALL PRESSURE SWITCH PER DETAIL 3 DRAWING M-6.
22. INSTALL PIPE BOLLARDS PER DETAIL 2 DRAWING C-2.
23. INSTALL 12" BUTTERFLY VALVE, FExFE.
24. INSTALL 12"-90° DUCTILE IRON BEND, FExMJ, WITH THRUST BLOCK PER RIALTO STANDARD NO. RW-722-0. SEE DETAIL 1 DRAWING C-19.
25. INSTALL PRESSURE TRANSMITTER PER DETAIL 3 DRAWING M-6.
26. INSTALL 1-1/2" HALF COUPLING, 1-1/2"x1" DIELECTRIC COUPLING, AND 1" CORP STOP FOR WATER SAMPLING.

NOTES:

1. ALL STEEL PIPE AND FITTINGS ABOVE GROUND SHALL BE CML AND FUSION EPOXY PAINTED.
2. ALL STEEL PIPE AND FITTINGS BELOW GROUND SHALL BE CML AND CMC TO 2" ABOVE GRADE.
3. ALL STEEL PIPE AND FITTINGS WILL BE SCH. 40, FLANGES SHALL BE CLASS 150, PER SPECIFICATIONS.
4. ALL JOINTS TO BE FULLY WELDED.
5. ANY DAMAGED FENCE SHALL BE REPLACED IN KIND.
6. POTHOLE ALL POINTS OF CONNECTION AND EVERY CONFLICTING UTILITY PRIOR TO ANY WORK. PROVIDE A POTHOLE REPORT IDENTIFYING DEPTH TO TOP AND BOTTOM OF CONFLICT, MATERIAL OF UTILITY AND TYPE OF UTILITY 3 WEEKS IN ADVANCE OF ANY WORK. HORIZONTAL LAND VERTICAL LOCATION OF CONFLICT SHALL BE SURVEYED AT POINTS OF CONNECTION AND POINTS OF CROSSING AND SHALL BE INCLUDED IN THE REPORT.

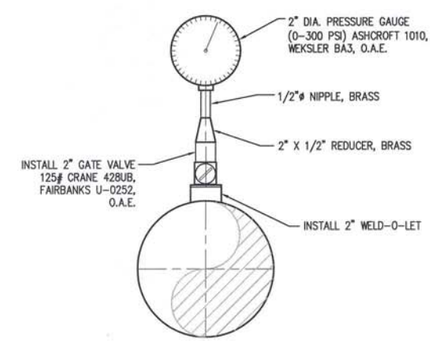

PRESSURE GAUGE DETAIL 2/M-6

NOT TO SCALE

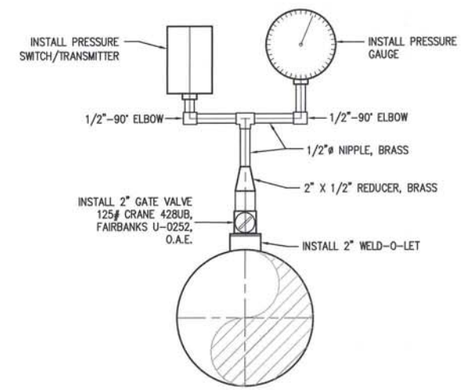

PRESSURE SWITCH/TRANSMITTER DETAIL 3/M-6

NOT TO SCALE

DIAL 811
DIGALERT
UNDERGROUND SERVICE ALERT
PLAY IT SAFE. DIAL BEFORE YOU DIG!
AT LEAST TWO WORKING DAYS PRIOR TO EXCAVATING

REGISTERED PROFESSIONAL ENGINEER CHRISTOPHER SHEM HAWES Exp. 6/30/2014 No. 69578 CIVIL STATE OF CALIFORNIA
10/18/14

PLANS PREPARED BY:

General Civil, Transportation, Municipal, Water and Wastewater Engineering, Planning, Construction Management, and Surveying

118 West Lime Avenue
Monrovia, Ca. 91016
Phone: (626) 357-0588
Fax: (626) 303-7957

CIVILTEC engineering inc.
Monrovia • Prescott • Phoenix

ERM

REV	DATE	REVISION	APPR'D	REV BY

GROUNDWATER EXTRACTION AND TREATMENT SYSTEM COMBINED REMEDY SOURCE AREA OPERABLE UNIT, ROCKETS, FIREWORKS, AND FLARES SUPERFUND SITE

SCALE	AS SHOWN	DESIGNED BY	JM/BS/BD/CD	DRAWN BY	JM/BS/CD	DRAWING NUMBER	
DATE	SCALE	CHECKED	BD/CSH	APPROVED		JOB NUMBER	20131175.00

REV

SHEET 44

DISCIPLINE NO. M-6

BOOSTER STATION MECHANICAL PIPING PLAN, SECTIONS AND DETAILS

ENVIRONMENTAL RESOURCES MANAGEMENT

X:\2013\201317500-ERM-RIALTO TREATMENT PLANT EXPANSION\DWG\TREATMENT PLANT\20131750 RIALTO-SHEET M-6 BOOSTER STATION MECHANICA

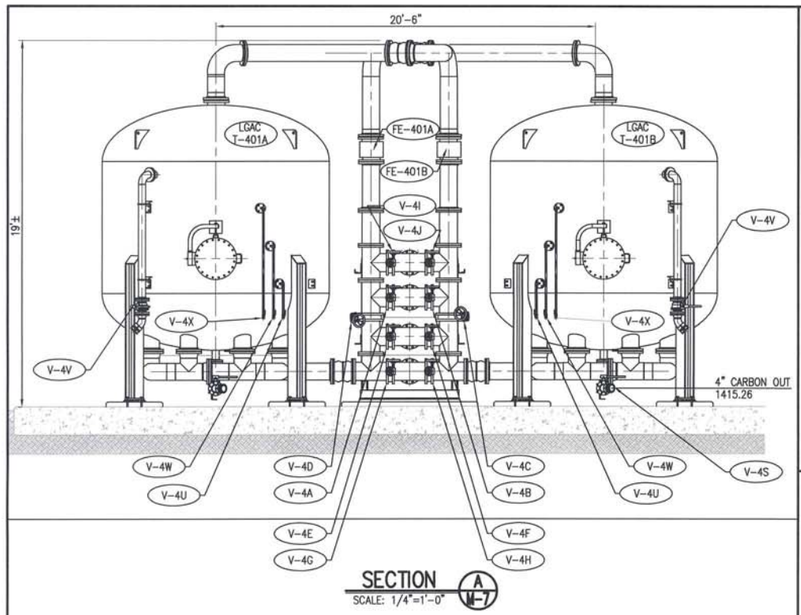

SECTION A M-7
SCALE: 1/4"=1'-0"

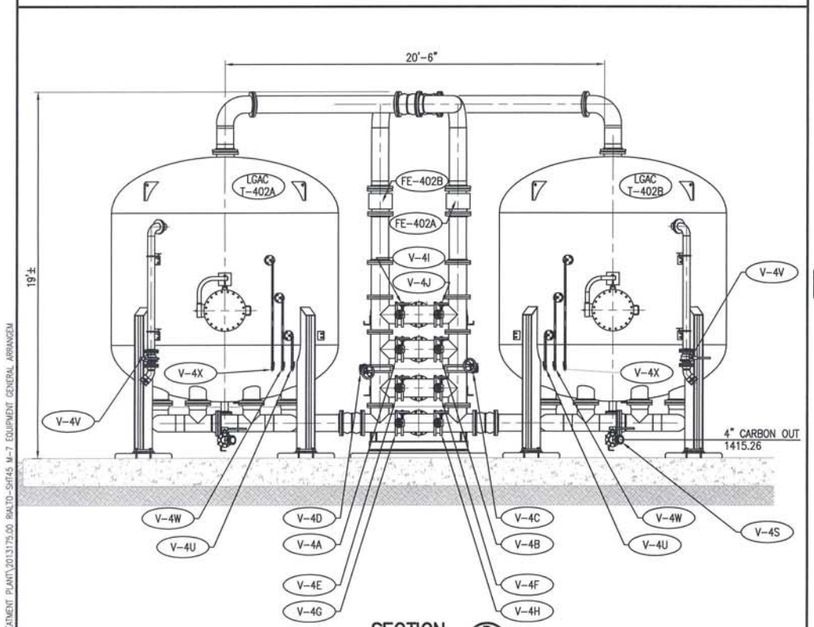

SECTION B M-7
SCALE: 1/4"=1'-0"

CONSTRUCTION NOTES: (THIS SHEET ONLY)

1. INSTALL 14" STEEL PIPE, SCH 40.
2. INSTALL 12" STEEL PIPE, SCH 40.
3. INSTALL 14"x14"x12"x12" STEEL CROSS, FExPExPExPE.
4. INSTALL 8" STEEL PIPE, SCH 40.
5. INSTALL 14"x8" STEEL REDUCER, FExFE.
6. INSTALL 14" BLIND FLANGE.
7. INSTALL DUCTILE IRON PIPE FLANGE ADAPTER.
8. INSTALL 8" DUCTILE IRON PIPE, CLASS 350.
9. INSTALL 8" SLIP-ON WELDING FLANGE.
10. INSTALL 8"-90° STEEL BEND, FExPE.

NOTE:

1. ALL STEEL PIPE AND FITTINGS ABOVE GROUND SHALL BE CML AND FUSION EPOXY PAINTED.
2. ALL STEEL PIPE AND FITTINGS BELOW GROUND SHALL BE CML AND CMC TO 2" ABOVE GRADE.
3. ALL STEEL PIPE AND FITTINGS WILL BE SCH. 40, FLANGES SHALL BE CLASS 150, PER SPECIFICATIONS.
4. ALL JOINTS TO BE FULLY WELDED.
5. ANY DAMAGED FENCE SHALL BE REPLACED IN KIND.
6. POTHOLE ALL POINTS OF CONNECTION AND EVERY CONFLICTING UTILITY PRIOR TO ANY WORK. PROVIDE A POTHOLE REPORT IDENTIFYING DEPTH TO TOP AND BOTTOM OF CONFLICT, MATERIAL OF UTILITY AND TYPE OF UTILITY 3 WEEKS IN ADVANCE OF ANY WORK. HORIZONTAL LAND VERTICAL LOCATION OF CONFLICT SHALL BE SURVEYED AT POINTS OF CONNECTION AND POINTS OF CROSSING AND SHALL BE INCLUDED IN THE REPORT.

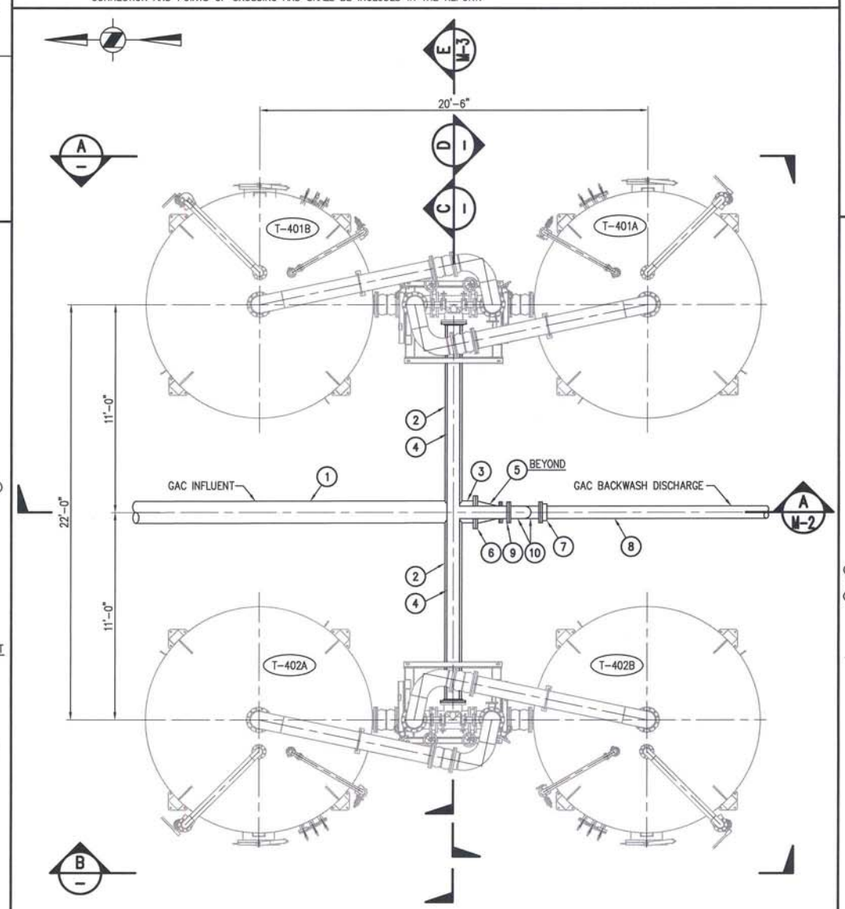

GAC FILTER PLAN 1
SCALE: 1/4"=1'-0"

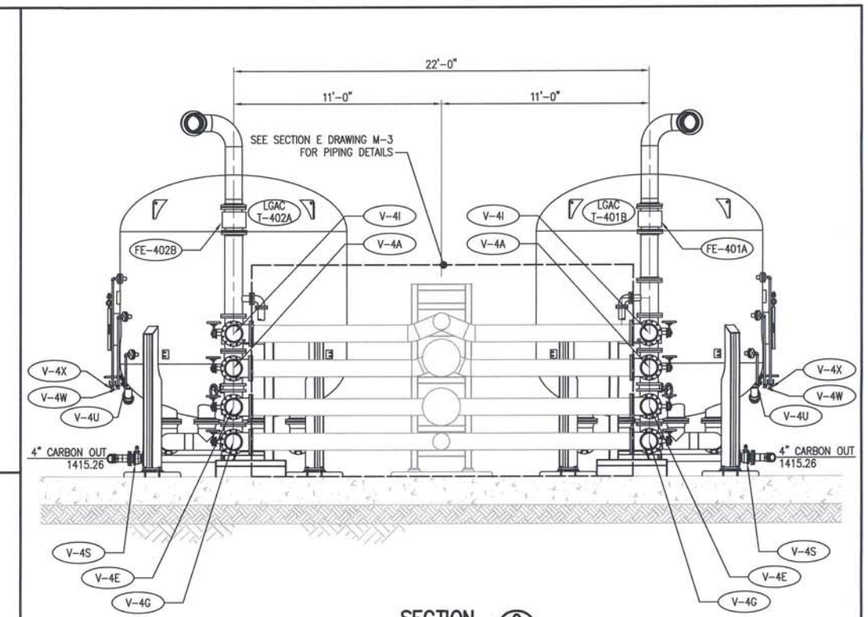

SECTION C M-7
SCALE: 1/4"=1'-0"

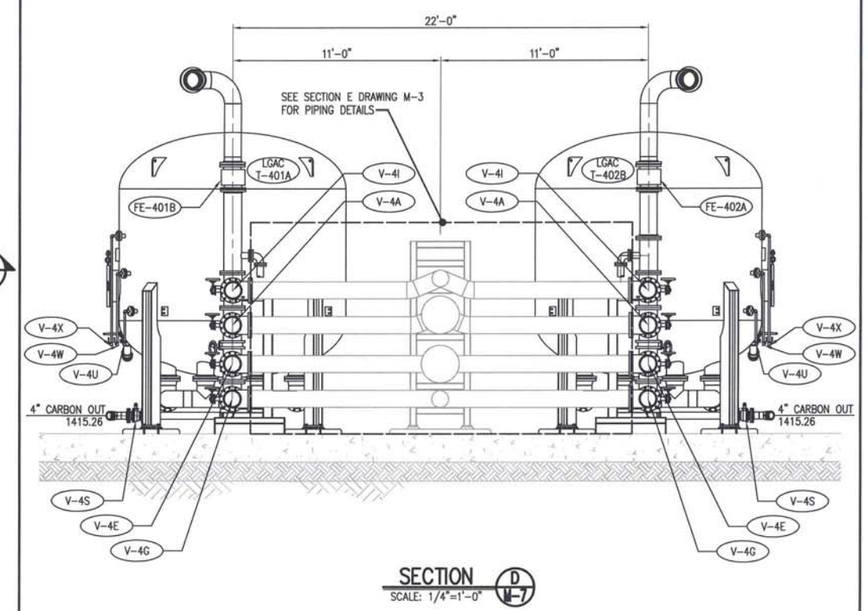

SECTION D M-7
SCALE: 1/4"=1'-0"

REV	DATE	REVISION	APPR'D	REV BY

DIAL 811
DIGALERT
UNDERGROUND SERVICE ALERT
PLAY IT SAFE. DIAL BEFORE YOU DIG!
AT LEAST TWO WORKING DAYS PRIOR TO EXCAVATING

REGISTERED PROFESSIONAL ENGINEER CHRISTOPHER BREM HAWES Exp. 6/30/2014 No. 69578 CIVIL STATE OF CALIFORNIA
12/18/14

PLANS PREPARED BY:

General Civil, Transportation, Municipal, Water and Wastewater Engineering, Planning, Construction Management, and Surveying

118 West Lime Avenue
Monrovia, Ca. 91016
Phone: (626) 357-0588
Fax: (626) 303-7957

CIVILTEC engineering inc.
Monrovia • Prescott • Phoenix

ERM

GROUNDWATER EXTRACTION AND TREATMENT SYSTEM COMBINED REMEDY SOURCE AREA OPERABLE UNIT, ROCKETS, FIREWORKS, AND FLARES SUPERFUND SITE

SCALE	AS SHOWN	DESIGNED BY	JM/BS/BD/CD	DRAWN BY	JM/BS/CD	DRAWING NUMBER	
DATE	SCALE	CHECKED	BD/CSH	APPROVED		JOB NUMBER	20131175.00

REV

SHEET 45

LGAC EQUIPMENT GENERAL ARRANGEMENT AND DETAILS

DISCIPLINE NO. M-7

ENVIRONMENTAL RESOURCES MANAGEMENT

A:\2013\20131175.00-ERM-BALTO TREATMENT PLANT EXPANSION\DWG\TREATMENT PLANT\20131175.00 BALTO-SHT45 M-7 EQUIPMENT GENERAL ARRANGEM

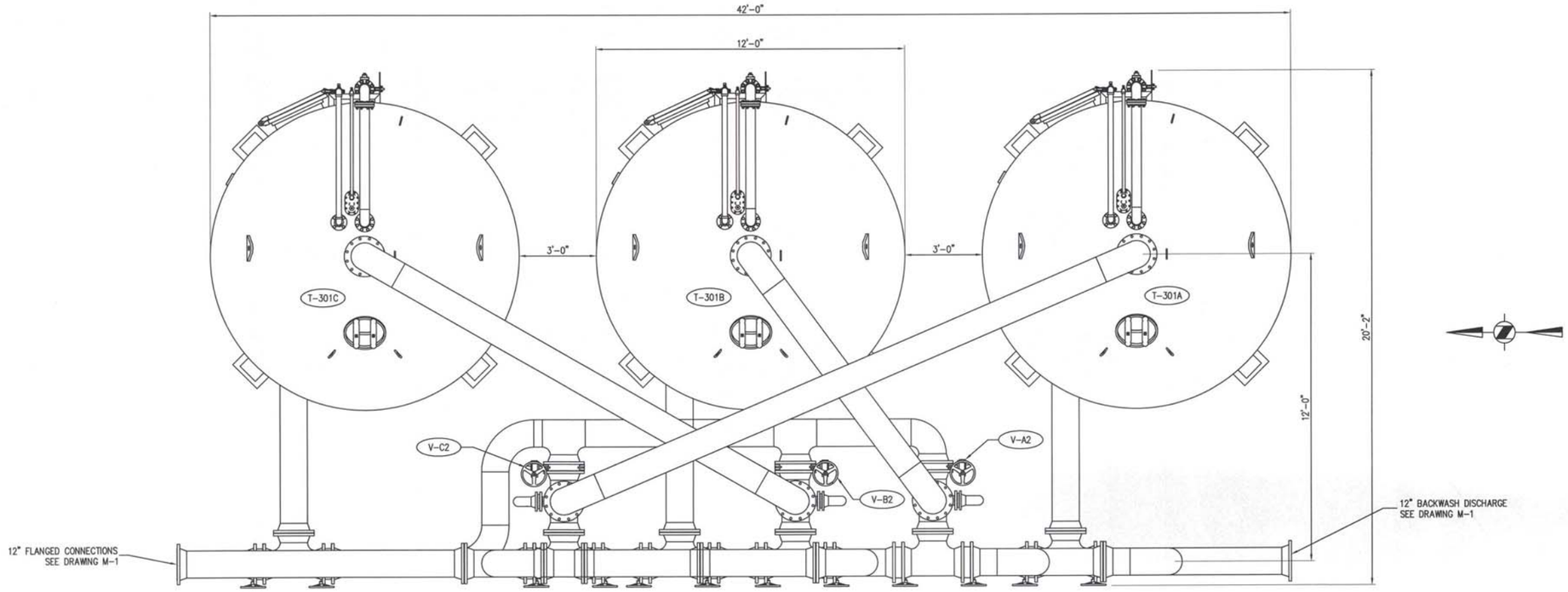

PLAN

NOT TO SCALE

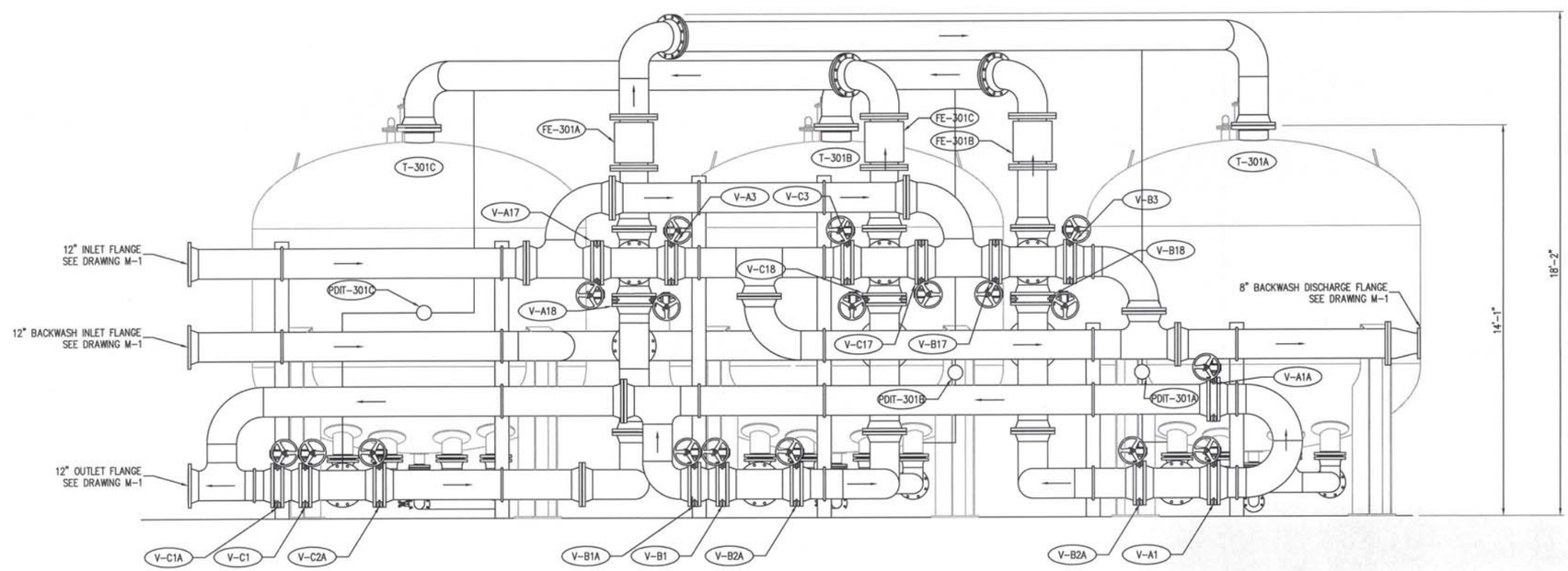

ELEVATION

NOT TO SCALE

NOTES:

1. THIS DRAWING IS TO SHOW PIPING AND EQUIPMENT FOR CUSTOMER APPROVAL.
2. ALL BUTTERFLY VALVES ARE DUCTILE IRON WITH STAINLESS TRIM, STAINLESS STEEL DISK.
3. PROVIDE 316 STAINLESS STEEL SEPTA UNDER DRAIN SCREENS.
4. VESSELS SHALL BE 125 PSI, ASME CODE.
5. FINISH INTERIOR WITH PLASITE 4110, PREPARE AND APPLY STRICTLY IN ACCORDANCE WITH MANUFACTURERS RECOMMENDATIONS TO MEET NSF STD 61 REQUIREMENTS.
6. PIPING MATERIALS SHALL MEET: CS PIPE ASTM-53 GRADE B (ERW); CS FITTINGS SA-234, ASME B16.9; SS THREADED FITTINGS ASTM A-351; SS PIPE ASTM A-312; SS BW FITTINGS ASTM A-403; MI THREADER FITTINGS ASME B-16.3.
7. FINISH EXTERIOR WITH CARBOGAURD 133 URTHANE COLOR TO BE USF DESERT SAND OVER CARBOLINE 888 RUST PREVENTATIVE EPOXY PRIMER APPLIED PER MFG. RECOMMENDATIONS.
8. SYSTEM ESTIMATED SHIPPING WEIGHT:
9. GROUTING BY OTHERS IF REQUIRED.
10. DIMENSIONS ± 2" TYPICAL FOR REFER ONLY, AS BUILT MAY VARY.
11. CS MEDIA SLURRY LINES TO BE LINED WITH SCOTCHCOAT 206N.

REV	DATE	REVISION	APPR'D	REV BY

DIAL 811 DIGALERT
UNDERGROUND SERVICE ALERT
PLAY IT SAFE. DIAL BEFORE YOU DIG!
AT LEAST TWO WORKING DAYS PRIOR TO EXCAVATING

REGISTERED PROFESSIONAL ENGINEER CHRISTOPHER SHEM HAWES Exp. 6/30/2014 No. 69578 CIVIL STATE OF CALIFORNIA 6/18/14

PLANS PREPARED BY:
General Civil, Transportation, Municipal, Water and Wastewater Engineering, Planning, Construction Management, and Surveying
118 West Lime Avenue
Monrovia, Ca. 91016
Phone: (626) 357-0588
Fax: (626) 303-7957
CIVILTEC engineering inc.
Monrovia • Prescott • Phoenix
ERM

GROUNDWATER EXTRACTION AND TREATMENT SYSTEM COMBINED REMEDY SOURCE AREA OPERABLE UNIT, ROCKETS, FIREWORKS, AND FLARES SUPERFUND SITE

SCALE	AS SHOWN	DESIGNED BY	JM/BS/BD/CD	DRAWN BY	JM/BS/CD	DRAWING NUMBER	
DATE	SCALE	CHECKED	BD/CSH	APPROVED		JOB NUMBER	20131175.00

REV

SHEET 46

DISCIPLINE NO. M-8

IX EQUIPMENT GENERAL ARRANGEMENT AND DETAILS

ENVIRONMENTAL RESOURCES MANAGEMENT

X:\2013\20131175.00-ERM-RIALTO TREATMENT PLANT EXPANSION\DWG\TREATMENT PLANT\20131175.00 RIALTO-SH146 M-8 EQUIPMENT GENERAL ARRANGEM

	PART NAME	MATERIAL
1	BODY	SA240 304/304L
2	COVER	SA240 304/304L
3	O-RING	BUNA-N
4	PIN	SA193 B7 ZINC PL
5	SNAP RING	STEEL ZINC PL
6	BASKET RESTRAINER	304 SS
7	FILTER BAG RETAINER	316 SS
8	EYE BOLT	SA193 B7 ZINC PL
9	HEX NUT	SA194 2H ZINC PL
10	WASHER	STEEL ZINC PL
11	DAVIT ASSEMBLY	CARBON STEEL

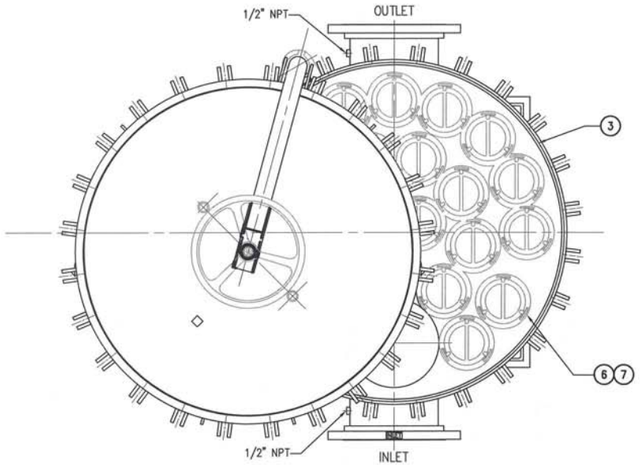

TOP

NOT TO SCALE

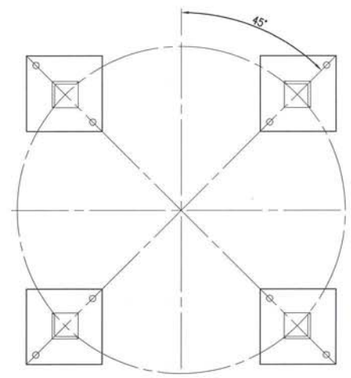

SECTION B

NOT TO SCALE

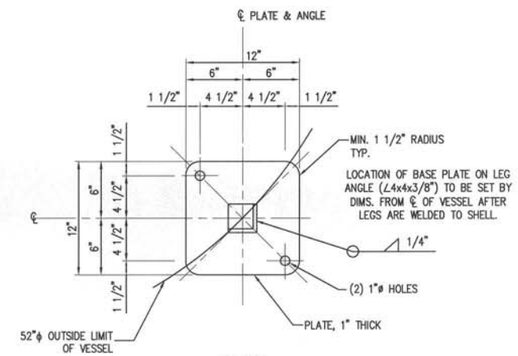

PLAN

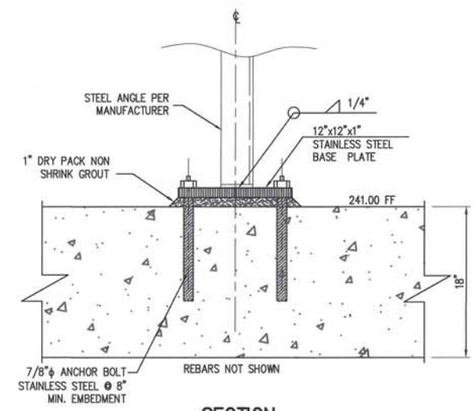

SECTION

BASE PLATE DETAIL

1 1/2"=1' SCALE

NOTES:

1. UNITS ARE TO BE DESIGNED, FABRICATED & "U" STAMPED IN ACCORDANCE WITH ASME SECT. VIII,DIV. 1 BOILER & PRESSURE VESSEL CODE, IN COMPLIANCE TO LATEST ADDENDA.
2. INLET / OUTLET FLANGE CONNECTIONS PER ANSI B. 16.5.
3. DESIGN PRESSURE: 225 PSI (MAWP)
   DESIGN TEMPERATURE 250° F.
   MDMT – – 20° F @ 225 PSI.
4. ALL DIMENSIONS ARE IN INCHES
5. ALL BOLT HOLES ARE TO STRADDLE NATURAL CENTERLINES.
6. APPROX. WEIGHT (DRY) 1800 LB.
7. MAXLINE MODEL NUMBER
   MBF-1402-AB16-100A-UT-11HD. OR APPROVED EQUIVALENT.
8. PROVIDE STRUCTURAL CALCULATIONS.
9. FIELD VERIFY ANCHOR BOLT SIZE AND LOCATION WITH EQUIPMENT VENDORS PRIOR TO INSTALLATION.
10. ALL ANCHORS SHALL BE 7/8" ASTM F593 STAINLESS STEEL. ALL ANCHORS SHALL BE INSTALLED IN ACCORDANCE WITH HILTI'S RECOMMENDATIONS AND ICC ESR-2322.
11. DEPUTY INSPECTION IS REQUIRED FOR THE INSTALLATION OF EPOXY ANCHORS. ANCHORS SHALL BE HAMMER DRILLED HILTI HIT-RE 500-SD+HAS-R.

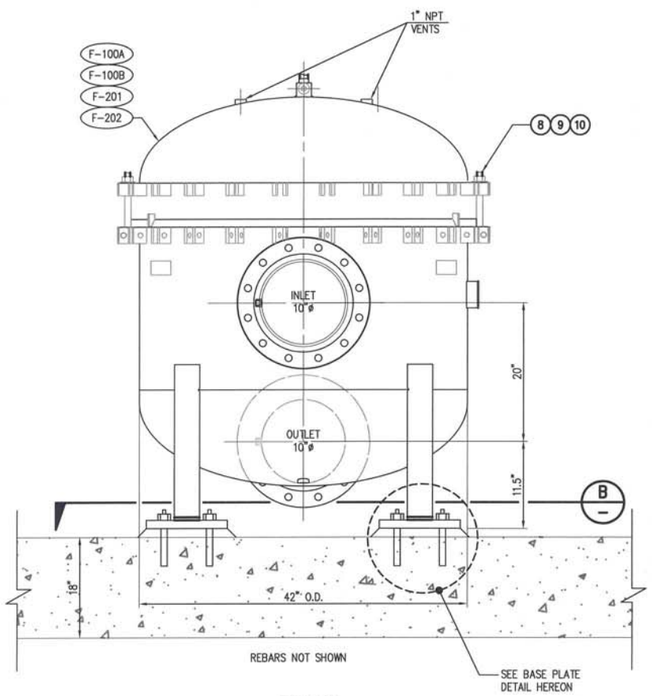

FRONT

NOT TO SCALE

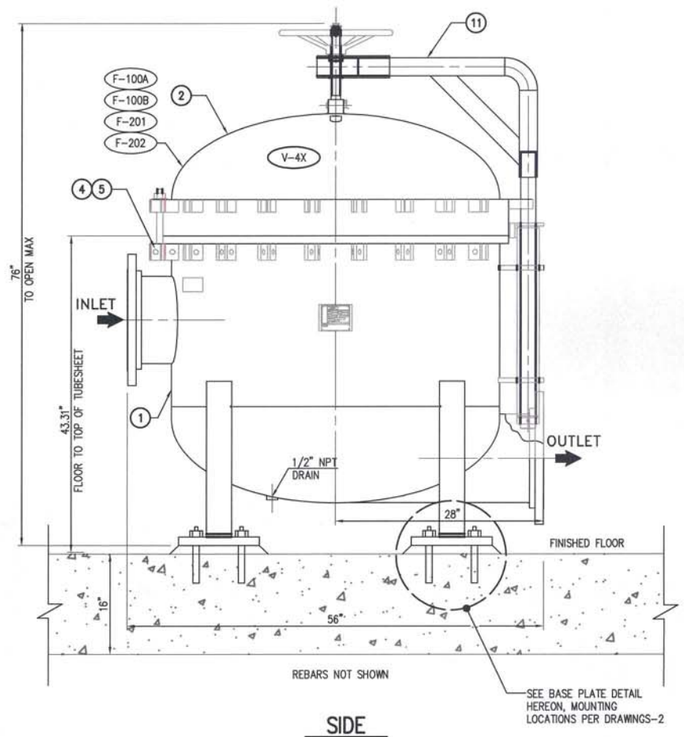

SIDE

NOT TO SCALE

REV	DATE	REVISION	APPR'D	REV BY

DIAL 811 DIGALERT

UNDERGROUND SERVICE ALERT

PLAY IT SAFE. DIAL BEFORE YOU DIG!

AT LEAST TWO WORKING DAYS PRIOR TO EXCAVATING

REGISTERED PROFESSIONAL ENGINEER CHRISTOPHER SHEM HAWES Exp. 6/30/2014 No. 69578 CIVIL STATE OF CALIFORNIA 01/08/14

PLANS PREPARED BY:

General Civil, Transportation, Municipal, Water and Wastewater Engineering, Planning, Construction Management, and Surveying

118 West Lime Avenue
Monrovia, Ca. 91016
Phone: (626) 357-0588
Fax: (626) 303-7957

CIVILTEC engineering inc.
Monrovia • Prescott • Phoenix

ERM

GROUNDWATER EXTRACTION AND TREATMENT SYSTEM COMBINED REMEDY SOURCE AREA OPERABLE UNIT, ROCKETS, FIREWORKS, AND FLARES SUPERFUND SITE

REV

SCALE	AS SHOWN	DESIGNED BY	JM/BS/BD/CD	DRAWN BY	JM/BS/CD	DRAWING NUMBER	SHEET
DATE	SCALE	CHECKED	BD/CSH	APPROVED		JOB NUMBER 2013175.00	47

FILTER EQUIPMENT GENERAL ARRANGEMENT AND DETAIL

DISCIPLINE NO. M-9

ENVIRONMENTAL RESOURCES MANAGEMENT

X:\2013\2013175.00-ERM-RIALTO TREATMENT PLANT EXPANSION\DWG\TREATMENT PLANT\2013175.00 RIALTO-SHEET M-9 CARTRIDGE FILTER EQUIPMENT

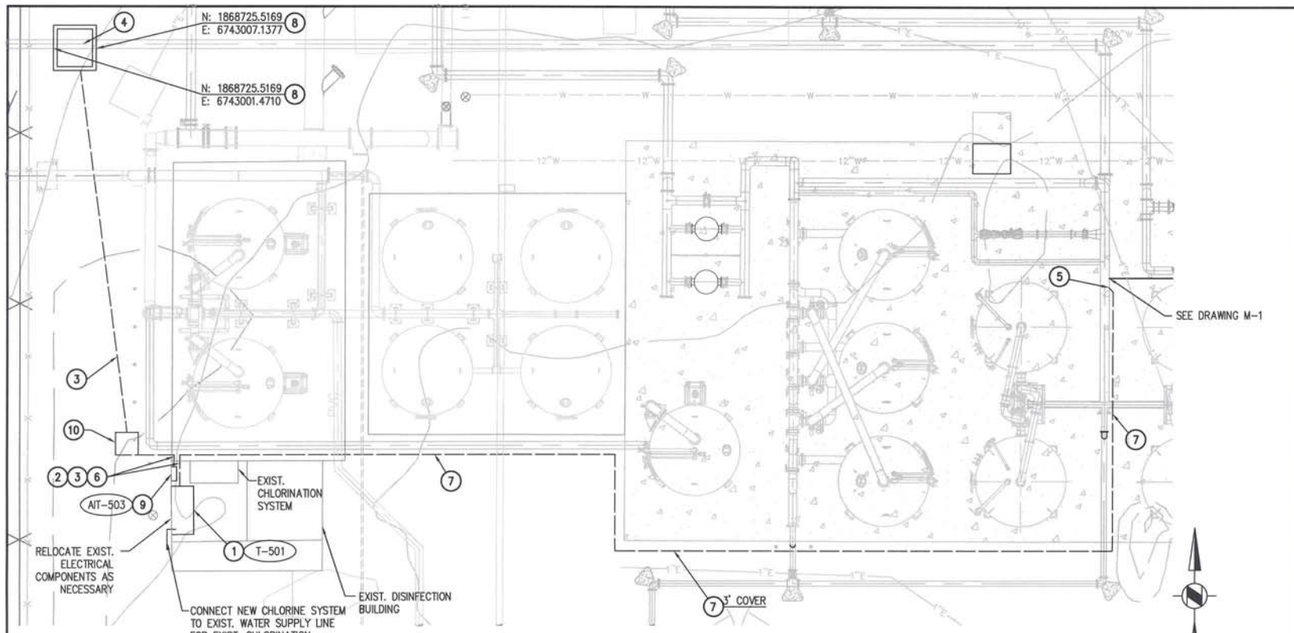

CHLORINATION PLAN

SCALE: 1" = 10'-0"

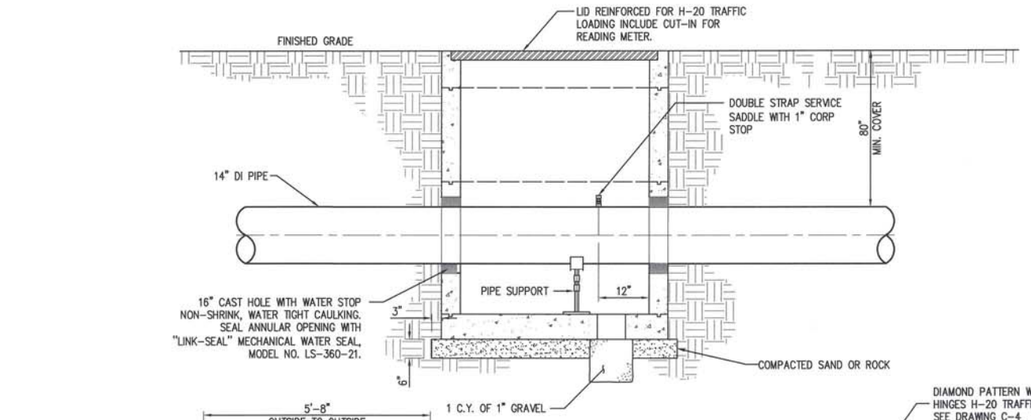

SECTION

NOT TO SCALE

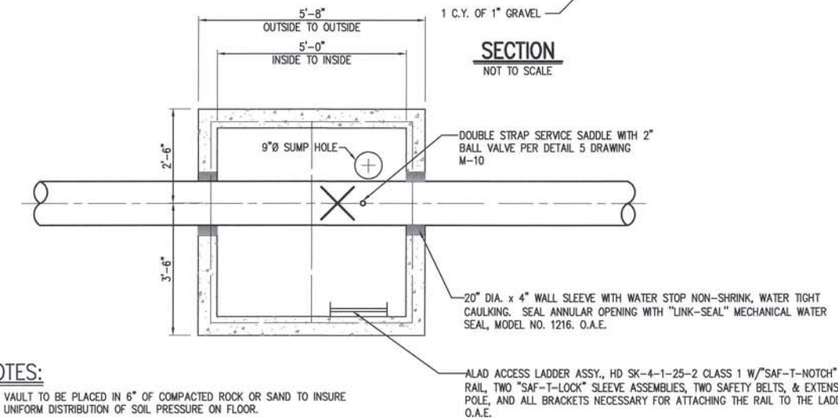

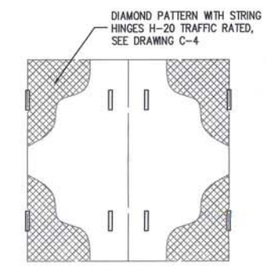

NOTES:

1. VAULT TO BE PLACED IN 6" OF COMPACTED ROCK OR SAND TO INSURE UNIFORM DISTRIBUTION OF SOIL PRESSURE ON FLOOR.
2. X-INDICATES LOCATION OF PIPE SUPPORT.

VAULT DETAIL 3

NOT TO SCALE

CONSTRUCTION NOTES: (THIS SHEET ONLY)

1. INSTALL ACCU-TAB SYSTEM POWERPRO CHLORINATION UNIT 3150. PER DETAIL 5 DRAWING M-13.
2. INSTALL 2" TYPE "K" COPPER WATER SUPPLY LINE BY CONNECTING EXISTING 2" SUPPLY LINE INSIDE ENCLOSURE.
3. INSTALL 1/2" PE SOLUTION LINE INSIDE 1-1/2" SCH. 80 PVC.
4. INSTALL WATER SAMPLING POINT PER DETAIL 5 DRAWING M-10.
5. INSTALL CHEMICAL INJECTOR PER DETAIL 1 DRAWING M-10.
6. SECURE SOLUTION LINE AND WATER SAMPLING LINE ON INTERIOR WALL OF CHEMICAL BUILDING PER DETAIL 2 DRAWING M-10.
7. RUN 1 1/2" PVC SCHD 80 SOLUTION LINE ALONG STEEL PIPE PER DETAIL 4 DRAWING M-10.
8. INSTALL SAMPLING VAULT PER DETAIL 3 DRAWING M-10.
9. INSTALL CHLORINE RESIDUAL ANALYZER PER DETAIL 1 DRAWING M-13.
10. INSTALL TRAFFIC RATED 3'x3'x3' PULL BOX.

NOTES:

1. ALL STEEL PIPE AND FITTINGS ABOVE GROUND SHALL BE CML AND FUSION EPOXY PAINTED.
2. ALL STEEL PIPE AND FITTINGS BELOW GROUND SHALL BE CML AND CMC TO 2" ABOVE GRADE.
3. ALL STEEL PIPE AND FITTINGS WILL BE SCH. 40, FLANGES SHALL BE CLASS 150, PER SPECIFICATIONS.
4. ALL JOINTS TO BE FULLY WELDED.
5. ANY DAMAGED FENCE SHALL BE REPLACED IN KIND.
6. POTHOLE ALL POINTS OF CONNECTION AND EVERY CONFLICTING UTILITY PRIOR TO ANY WORK. PROVIDE A POTHOLE REPORT IDENTIFYING DEPTH TO TOP AND BOTTOM OF CONFLICT, MATERIAL OF UTILITY AND TYPE OF UTILITY 3 WEEKS IN ADVANCE OF ANY WORK. HORIZONTAL AND VERTICAL LOCATION OF CONFLICT SHALL BE SURVEYED AT POINTS OF CONNECTION AND POINTS OF CROSSING AND SHALL BE INCLUDED IN THE REPORT.
7. PROTECT EXISTING ELECTRICAL CONDUIT. ANY CONFLICTING CONDUIT SHALL BE RELOCATED.

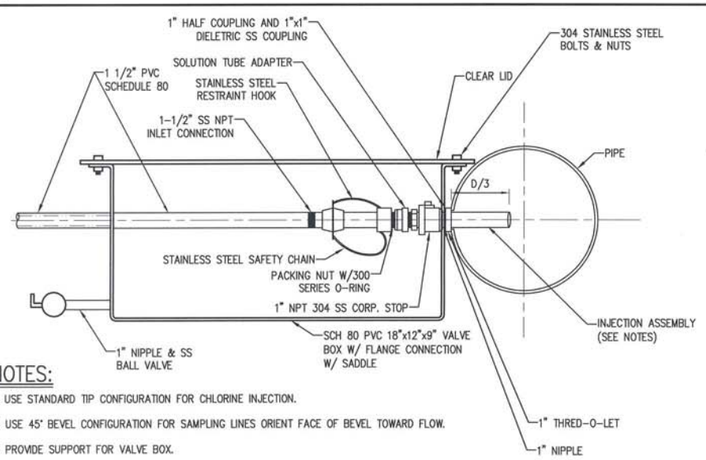

NOTES:

1. USE STANDARD TIP CONFIGURATION FOR CHLORINE INJECTION.
2. USE 45° BEVEL CONFIGURATION FOR SAMPLING LINES ORIENT FACE OF BEVEL TOWARD FLOW.
3. PROVIDE SUPPORT FOR VALVE BOX.

CHEMICAL INJECTION CONNECTION DETAIL 1

NOT TO SCALE

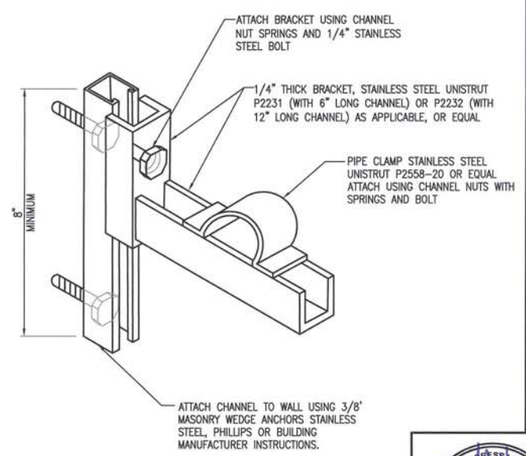

PIPE CLAMP & BRACKET DETAIL 2

NOT TO SCALE

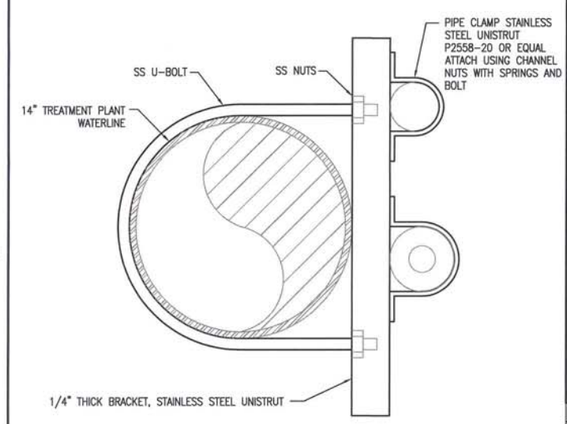

PIPE CLAMP & BRACKET DETAIL 4

NOT TO SCALE

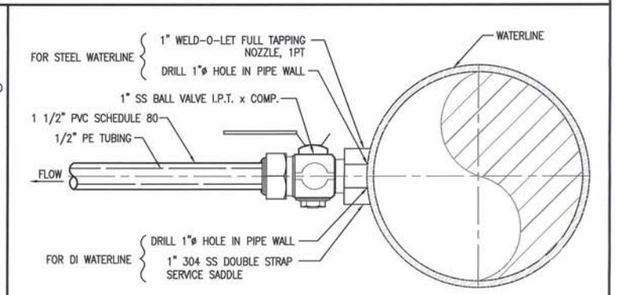

NOTE:

1. USE 45° BEVEL CONFIGURATION FOR SAMPLING LINES ORIENT FACE OF BEVEL TOWARD FLOW.

WATER SAMPLE LINE CONNECTION DETAIL 5

NOT TO SCALE

REV	DATE	REVISION	APPR'D	REV BY

DIAL 811 UNDERGROUND SERVICE ALERT

DIGALERT

PLAY IT SAFE. DIAL BEFORE YOU DIG!

AT LEAST TWO WORKING DAYS PRIOR TO EXCAVATING

REGISTERED PROFESSIONAL ENGINEER CHRISTOPHER CHEM HAWES Exp. 6/30/2014 No. 69578 CIVIL STATE OF CALIFORNIA 07/08/14

PLANS PREPARED BY:

General Civil, Transportation, Municipal, Water and Wastewater Engineering, Planning, Construction Management, and Surveying

118 West Lime Avenue
Monrovia, Ca. 91016
Phone: (626) 357-0588
Fax: (626) 303-7957

CIVILTEC engineering inc.
Monrovia • Prescott • Phoenix

ERM

GROUNDWATER EXTRACTION AND TREATMENT SYSTEM COMBINED REMEDY SOURCE AREA OPERABLE UNIT, ROCKETS, FIREWORKS, AND FLARES SUPERFUND SITE

SCALE	AS SHOWN	DESIGNED BY	JM/BS/BD/CD	DRAWN BY	JM/BS/CD	DRAWING NUMBER	
DATE	SCALE	CHECKED	BD/CSH	APPROVED		JOB NUMBER	2013175.00

REV

SHEET 48

DISINFECTION EQUIPMENT GENERAL ARRANGEMENT AND DETAIL

DISCIPLINE NO. M-10

ENVIRONMENTAL RESOURCES MANAGEMENT

X:\2013\2013175.00-ERM-RIALTO TREATMENT PLANT EXPANSION\DWG\TREATMENT PLANT\2013175.00 RIALTO-SHT48 M-10 DISINFECTION.DWG (06-17-1

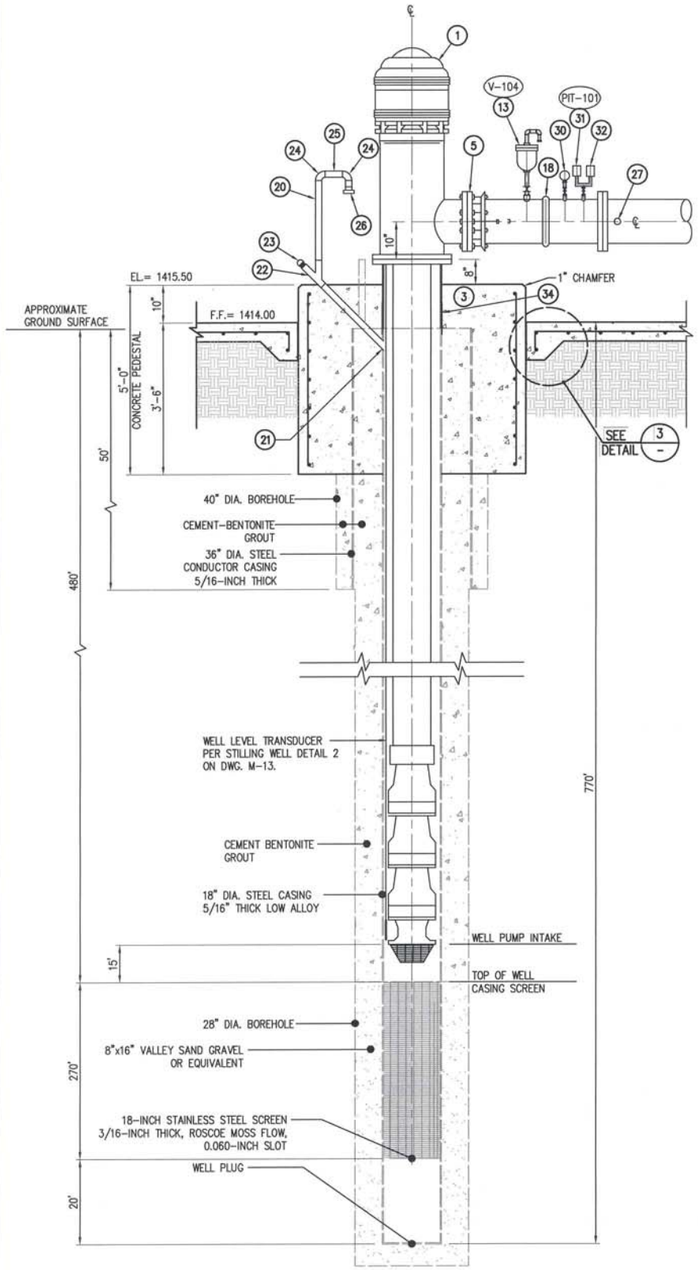

WELL HEAD CASING DETAIL 2
NOT TO SCALE

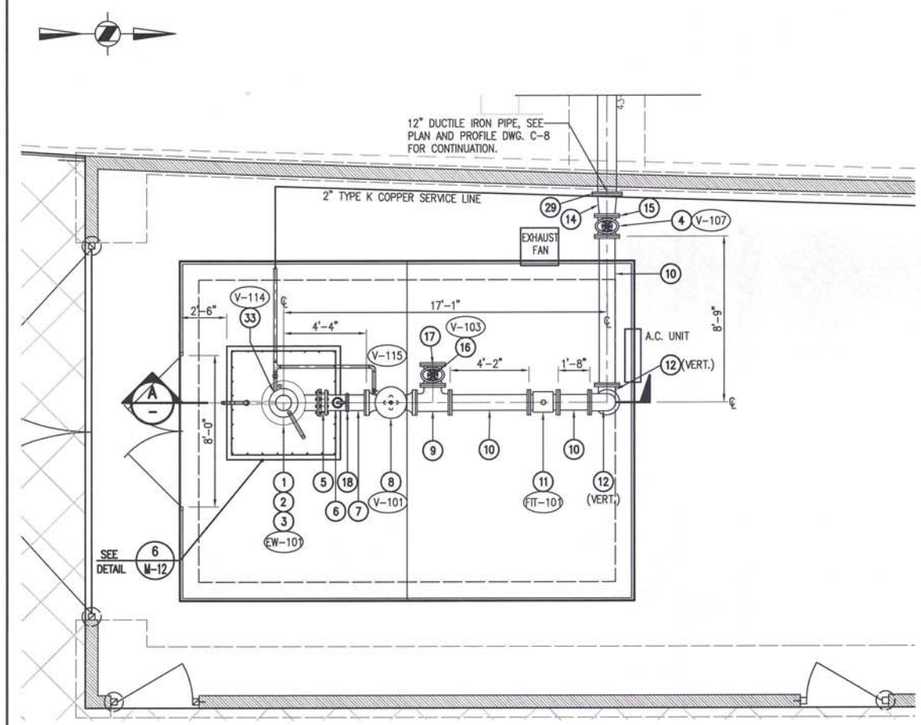

WELL PIPING PLAN 1
SCALE: 1/4"=1'-0"

CONSTRUCTION NOTES: (THIS SHEET ONLY)

1. INSTALL 450hp MOTOR, SEE SPECIFICATIONS FOR MAKE AND MODEL.
2. INSTALL STEEL 10" STEEL DISCHARGE HEAD, FExFE, EPOXY LINED AND EPOXY COATED OR PAINTED.
3. CONST. 6' SQ. x 5' DEEP CONC. PUMP PEDESTAL PER SECTION "A" THIS DWG.
4. INSTALL 10" GATE VALVE, FExFE, W/ VALVE BOX AND RISER PER CITY OF RIALTO STANDARD NO. RW-718-0, DETAIL 4 ON DWG C-20.
5. INSTALL 10" DISMANTLING JOINT.
6. INSTALL 10" STANDARD STEEL PIPE, PExVIC, CML & PAINTED.
7. INSTALL 10" STANDARD STEEL PIPE, FExVIC, CML & PAINTED.
8. INSTALL 10" PUMP CONTROL VALVE, FExFE, SEE SPECIFICATIONS FOR MAKE AND MODEL.
9. INSTALL 10"x10"x10" STEEL TEE, FExFExFE.
10. INSTALL 10" STANDARD STEEL PIPE, FExFE, CML & PAINTED.
11. INSTALL 10" MAG METER, FExFE, SEE SPECIFICATIONS FOR MAKE AND MODEL.
12. INSTALL 10"-90° STEEL BEND, FExFE, CML & PAINTED OR CMC.
13. INSTALL 2" AIR RELEASE & VACUUM VALVE ASSEMBLY PER DETAIL 1 ON DWG. M-6.
14. INSTALL 12"x10" DUCTILE IRON REDUCER, MJxFE.
15. INSTALL FLANGE ISOLATION KIT.
16. INSTALL 10" GATE VALVE, FExFE., SEE SPECIFICATIONS FOR MAKE & MODEL.
17. INSTALL 10" STD. STEEL BLIND FLANGE.
18. INSTALL 10" VIC COUPLING.
19. INSTALL PIPE SUPPORT PER DETAIL 4 ON DWG. M-6.
20. INSTALL 2" VENT PIPE, GALV. STEEL.
21. WELD TO CASING VENT PIPE.
22. INSTALL 2"-45° WYE WITH NIPPLE, GALV. STEEL.
23. INSTALL 2" THREADED CAP, GALV. STEEL.
24. INSTALL 2"-90° BEND, GALV. STEEL.
25. INSTALL 2" THREADED NIPPLE, GALV. STEEL.
26. INSTALL MESH SCREEN, 304 STAINLESS STEEL, WITH STAINLESS STEEL BAND CLAMP.
27. INSTALL 1-1/2" HALF COUPLING, 1-1/2"x1" DIELECTRIC COUPLING, AND 1" CORP STOP FOR WATER SAMPLING.
28. INSTALL 18" PAINTED STEEL CASING EXTENSION, SCH. 40, AND MATCH CASING FLANGE WITH WELL DISCHARGE HEAD FLANGE. CONTRACTOR TO COORDINATE FLANGE BOLT ORIENTATION WITH DISCHARGE HEAD.
29. INSTALL INSULATING FLANGE PER DETAIL 2 ON SHEET M-12.
30. INSTALL PRESSURE GAUGE PER DETAIL 2 ON DWG. M-6.
31. INSTALL PRESSURE SWITCH PER DETAIL 3 ON DWG. M-6, SEE SPECIFICATIONS FOR MAKE AND MODEL.
32. INSTALL PRESSURE TRANSMITTER PER DETAIL 3 ON DWG. M-6, SEE SPECIFICATIONS FOR MAKE AND MODEL.
33. INSTALL 2" VALVE AND FITTINGS AS NEEDED TO COMPLETE CONNECTION.
34. WELD NEW CASTING WITH EXISTING CASING AND EXTEND NEW CASING AS REQUIRED.

NOTES:
1. ALL STEEL PIPE AND FITTINGS ABOVE GROUND SHALL BE CML AND FUSION EPOXY PAINTED.
2. ALL STEEL PIPE AND FITTINGS BELOW GROUND SHALL BE CML AND CMC.
3. ALL STEEL PIPE AND FITTINGS WILL BE SCH. 40, FLANGES SHALL BE CLASS 150, PER SPECIFICATIONS.
4. ALL JOINTS TO BE FULLY WELDED.
5. ANY DAMAGED FENCE SHALL BE REPLACED IN KIND.

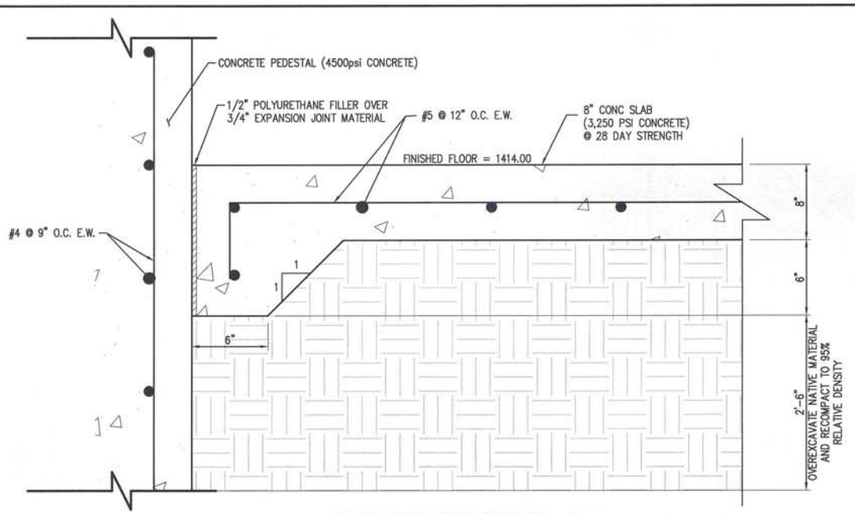

CONCRETE SLAB DETAIL 3
SCALE: 1"=0'-6"

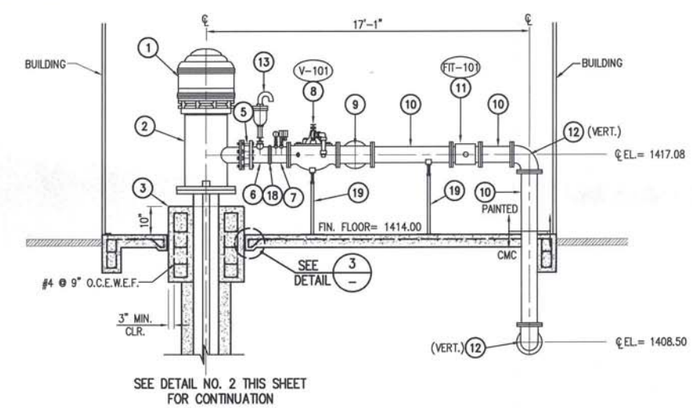

SECTION A
SCALE: 1/4"=1'-0"

REV	DATE	REVISION	APPR'D	REV BY

DIAL 811 DIGALERT — UNDERGROUND SERVICE ALERT — PLAY IT SAFE. DIAL BEFORE YOU DIG! — AT LEAST TWO WORKING DAYS PRIOR TO EXCAVATING

REGISTERED PROFESSIONAL ENGINEER CHRISTOPHER SHEIN HAWES Exp. 6/30/2014 No. 69578 CIVIL STATE OF CALIFORNIA — 01/18/14

PLANS PREPARED BY:
General Civil, Transportation, Municipal, Water and Wastewater Engineering, Planning, Construction Management, and Surveying
118 West Lime Avenue
Monrovia, Ca. 91016
Phone: (626) 357-0588
Fax: (626) 303-7957
CIVILTEC engineering inc. Monrovia • Prescott • Phoenix
ERM

GROUNDWATER EXTRACTION AND TREATMENT SYSTEM COMBINED REMEDY SOURCE AREA OPERABLE UNIT, ROCKETS, FIREWORKS, AND FLARES SUPERFUND SITE

SCALE	AS SHOWN	DESIGNED BY	JM/BS/BD/CD	DRAWN BY	JM/BS/CD	DRAWING NUMBER	
DATE	SCALE	CHECKED	BD/CSH	APPROVED		JOB NUMBER	20131175.00

REV

SHEET 49

DISCIPLINE NO. M-11

WELL MECHANICAL PIPING PLAN, SECTIONS AND DETAILS

ENVIRONMENTAL RESOURCES MANAGEMENT

X:\2013\20131175.00-ERM-RIALTO TREATMENT PLANT EXPANSION\DWG\TREATMENT PLANT\20131175.00 RIALTO-SHT49 M-11 WELL MECHANICAL PIPING PL

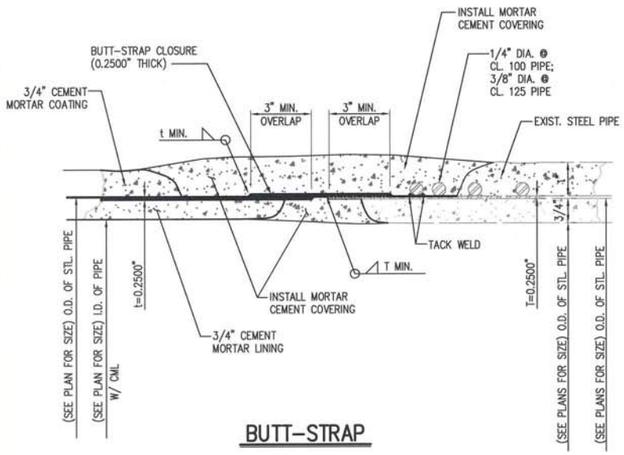

BUTT-STRAP

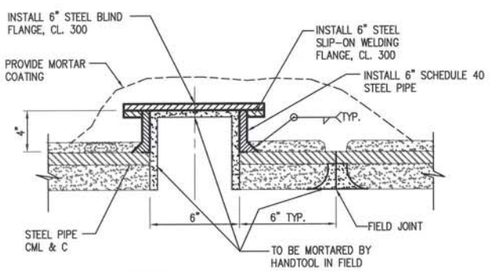

NOTE:

COAT ALL EXPOSED METAL WITH 1/2" THICK CEMENT MORTAR.

HAND HOLE

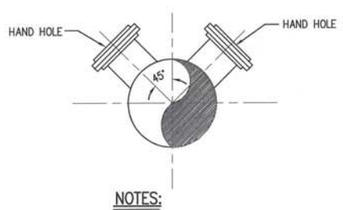

NOTES:

1. DOUBLE HAND HOLE FOR PIPE OVER 14"ø.
2. SINGLE HAND HOLE FOR 12" AND SMALLER.
3. SEE PLAN SHEET FOR PRESSURE CLASS.

BUTT-STRAP AND HAND HOLE CLOSURE DETAIL (1)

NOT TO SCALE

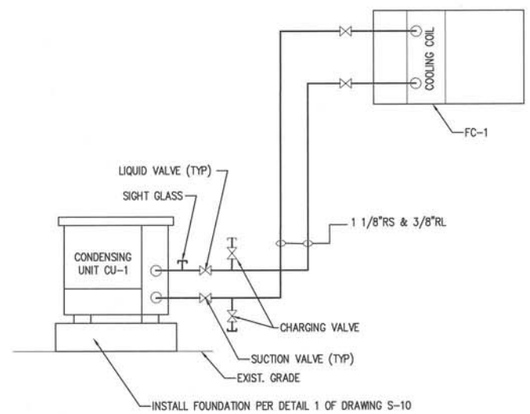

SPLIT SYSTEM AC UNIT (2 / S-6)

NOT TO SCALE

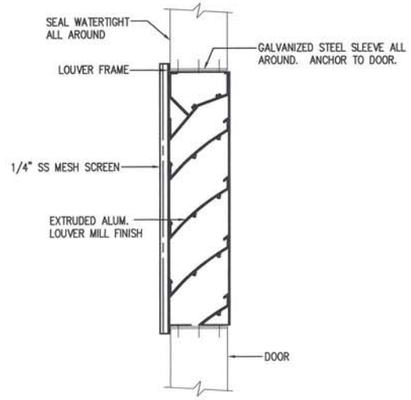

LOUVER WITH DAMPER DETAIL (4 / S-6)

NOT TO SCALE

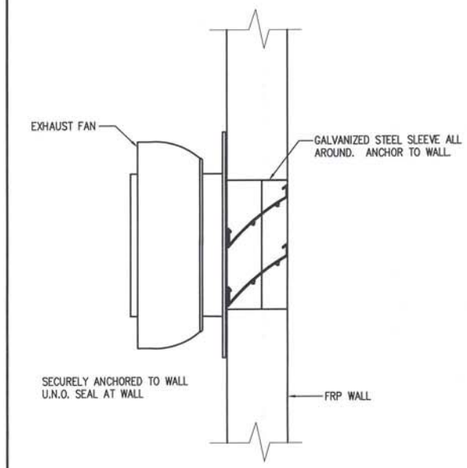

FAN WITH DAMPER DETAIL (5 / S-6)

NOT TO SCALE

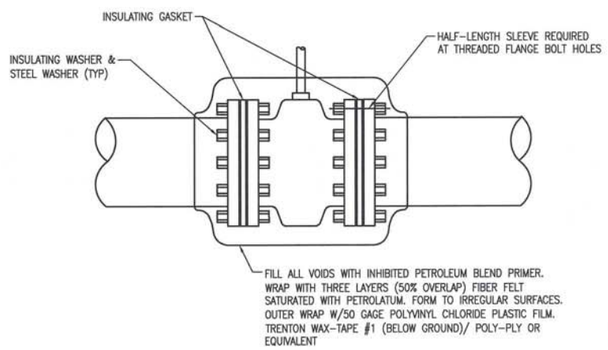

NOTES:

1. INSULATING WASHERS REQUIRED ON BOTH SIDES OF EACH FLANGE PAIR.
2. FULL LENGTH INSULATING SLEEVES REQUIRED AT ALL FLANGE STUDS. HALF LENGTH SLEEVES REQUIRED AT FLANGE BOLTS.
3. PLACE STEEL WASHERS ON OUTSIDE OF INSULATING WASHERS. PLACE INSULATING WASHERS ADJACENT TO FLANGE.

INSULATING FLANGE DETAIL (3 / –)

NOT TO SCALE

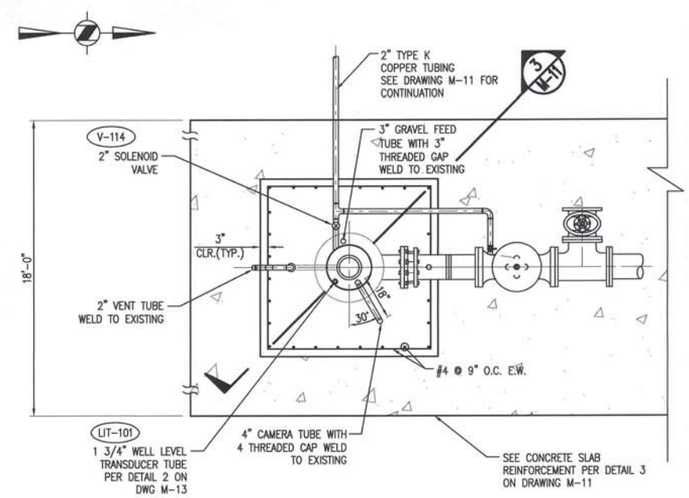

WELL PEDESTAL PLAN VIEW (6 / M-11)

NOT TO SCALE

REV	DATE	REVISION	APPR'D	REV BY

DIAL 811 DIGALERT

UNDERGROUND SERVICE ALERT

PLAY IT SAFE. DIAL BEFORE YOU DIG!

AT LEAST TWO WORKING DAYS PRIOR TO EXCAVATING

REGISTERED PROFESSIONAL ENGINEER CHRISTOPHER SHEM HAWES Exp. 6/30/2014 No. 69378 CIVIL STATE OF CALIFORNIA 6/18/14

PLANS PREPARED BY:

General Civil, Transportation, Municipal, Water and Wastewater Engineering, Planning, Construction Management, and Surveying

118 West Lime Avenue
Monrovia, Ca. 91016
Phone: (626) 357-0588
Fax: (626) 303-7957

CIVILTEC engineering inc.
Monrovia • Prescott • Phoenix

ERM

GROUNDWATER EXTRACTION AND TREATMENT SYSTEM COMBINED REMEDY SOURCE AREA OPERABLE UNIT, ROCKETS, FIREWORKS, AND FLARES SUPERFUND SITE

SCALE	AS SHOWN	DESIGNED BY	JM/BS/BQ/CD	DRAWN BY	JM/BS/CD	DRAWING NUMBER	
DATE	SCALE	CHECKED	BD/CSH	APPROVED		JOB NUMBER	20131175.00

MECHANICAL DETAILS

ENVIRONMENTAL RESOURCES MANAGEMENT

REV

SHEET 50

DISCIPLINE NO. M-12

X:\2013\2013175.00-ENG-RIALTO TREATMENT PLANT EXPANSION\DWG\TREATMENT PLANT\20131175.00 RIALTO-SHEET M-12 MECHANICAL DETAILS.DWG (0

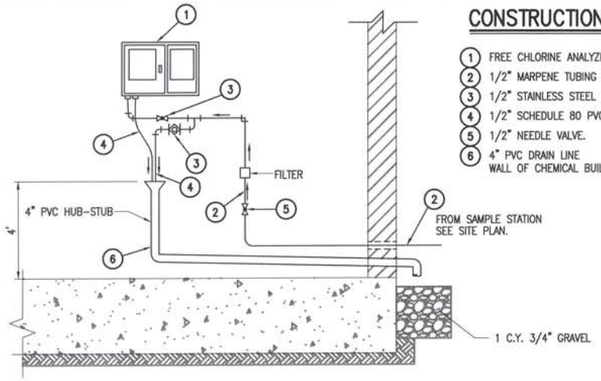

CONSTRUCTION NOTES: (THIS DETAIL ONLY)

1. FREE CHLORINE ANALYZER, WALL MOUNTED, SEE SPECS FOR MAKE AND MODEL.
2. 1/2" MARPENE TUBING WITHIN 1 1/2" PVC CONDUIT.
3. 1/2" STAINLESS STEEL BALL VALVE, CL. 150.
4. 1/2" SCHEDULE 80 PVC PIPE AND FITTINGS.
5. 1/2" NEEDLE VALVE.
6. 4" PVC DRAIN LINE WALL OF CHEMICAL BUILDING PER DETAIL 2 DRAWING M-10.

CHLORINE RESIDUAL ANALYZER (1 / M-10)

NOT TO SCALE

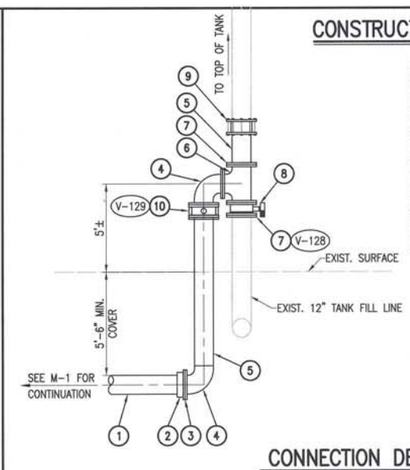

CONSTRUCTION NOTES: (THIS DETAIL ONLY)

1. INSTALL 12" DUCTILE IRON PIPE, CLASS 350.
2. INSTALL 12" DUCTILE IRON PIPE FLANGE ADAPTER.
3. INSTALL FLANGE ISOLATION KIT PER DETAIL 3 DRAWING M-12.
4. INSTALL 12"-90° STEEL BEND, FExPE.
5. INSTALL 12" STEEL PIPE, SCH 40.
6. INSTALL 12"x12"x12" STEEL TEE, FExFExFE.
7. INSTALL 12" SLIP-ON WELDING FLANGE.
8. INSTALL 12" BUTTERFLY VALVE, FExFE.
9. INSTALL 12" TRANSITION COUPLING.
10. INSTALL 12" WATER TYPE CHECK VALVE. BRAY CHECK RITE 210.

CONNECTION DETAIL (4 / M-1)

NOT TO SCALE

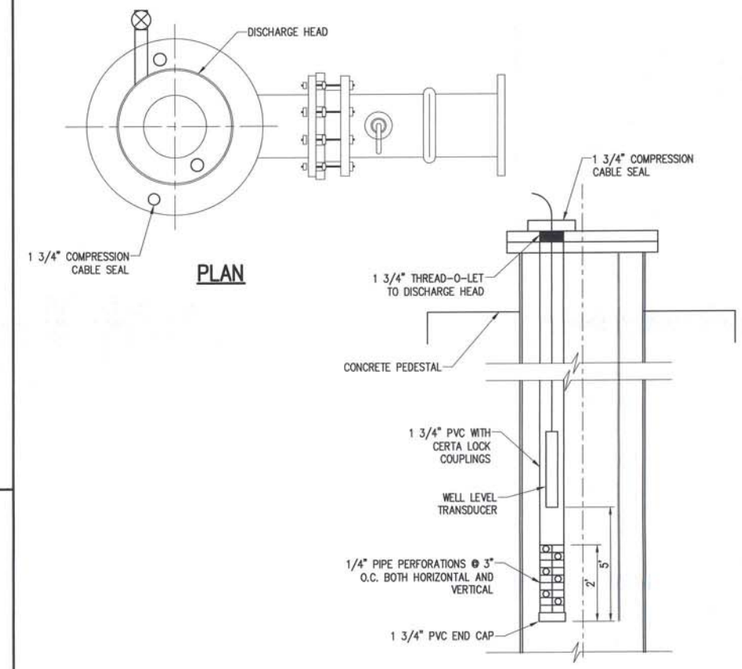

STILLING WELL DETAIL (2 / M-11)

NOT TO SCALE

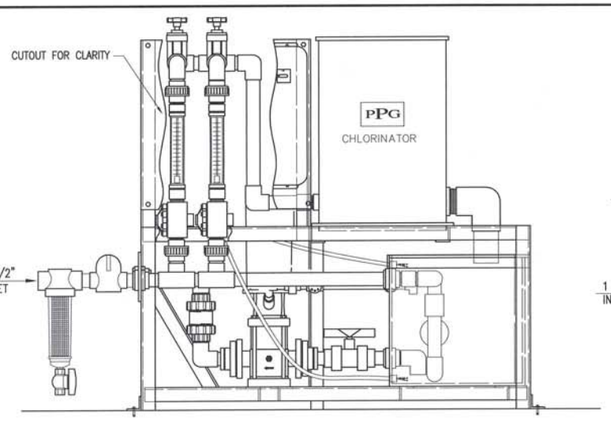

DUAL SOLENOID INLET

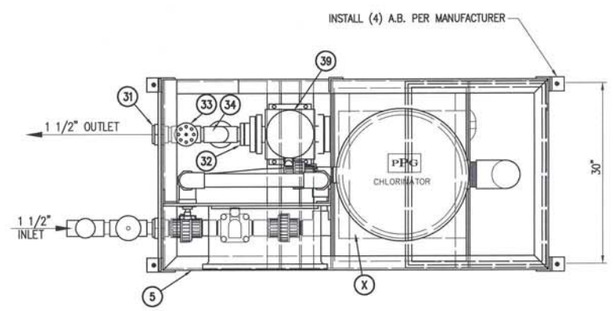

SYSTEM PLAN

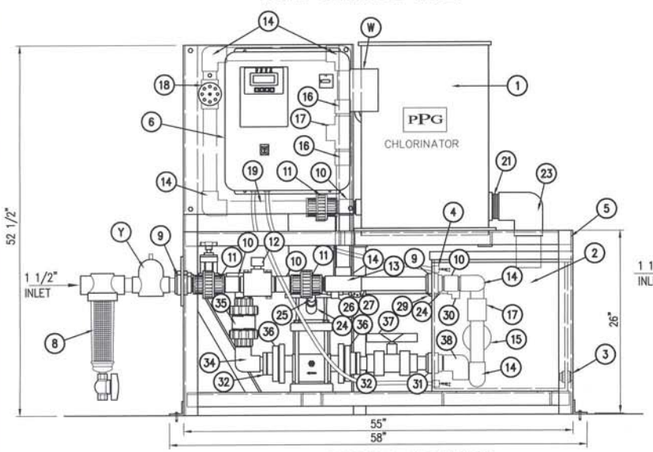

SYSTEM ELEVATION

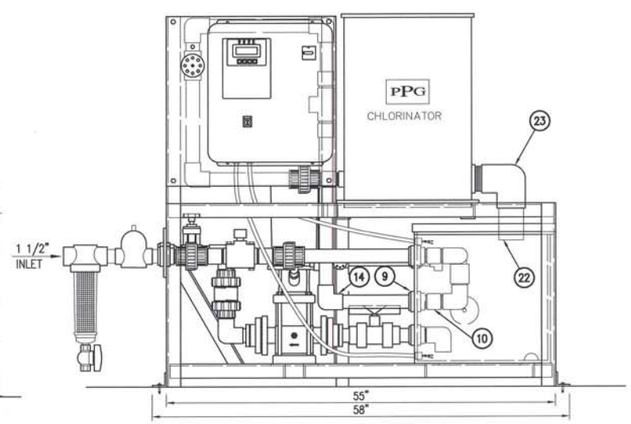

PIPING FOR VFD PUMP OPTION

CONSTRUCTION NOTES: (THIS DETAIL ONLY)

BILL OF MATERIAL 3150		
#	QUAN.	DESCRIPTION
1	1	PPG 3150 CHLORINATOR
2	1	28 GALLON HDPE SOLUTION TANK
3	1	TANK DRAIN 1/2" BULKHEAD FITTING & PLUG
4	2	SOLUTION TANK LEVEL SWITCH
5	1	30"x58"x26" ALUMINUM STAND W/ ANCHOR ANGLES
6	1	ELECTRICAL BOX/PANEL UL LISTED
7		
		CHLORINATOR INFLUENT PIPING
8	1	RUSCO 1 1/2" INLET STRAINER (SHIP LOOSE)
9	2	HAYWARD 1 1/2" PVC BULKHEAD FITTING
10	4	SPEARS 1 1/2" MPT X SLIP PVC MALE ADAPTOR
11	4	SPEARS 1 1/2" PVC THREADED UNION
12	2	PARKER-SKINNER 7000 SERIES PASV100 1 1/2" SOLENOID VALVE
13	3	1 1/2" ALL SLIP SCH. 80 PVC TEE
14	9	SPEARS 1 1/2" SLIP X SLIP SCH. 80 PVC 90° ELBOW
15	1	KERRICK #PS100SS 1" FLOAT VALVE ASSEMBLY
16	3	SPEARS 1 1/2" SLIP X FPT SCH. 80 PVC FEMALE ADAPTOR
17	1	1 1/2" FLOW SENSOR BODY
18	2	KBI GVG-1000-S 1 1/2" GATE VALVE
19	AR	1 1/2" SCH. 80 PVC PIPE
20	AR	1 1/2" SCH. 80 PVC PIPE
		CHLORINATOR EFFLUENT PIPING
21	1	3" SCH. 80 PVC THD. PIPE NIPPLE
22	AR	3" SCH. 80 PVC PIPE
23	1	SPEARS 3" SLIP X SLIP SCH. 80 PVC 90° ELBOW
		PUMP PIPING
24	2	1/2" SCH 80 PVC MALE ADAPTOR
25	1	SPEARS 1/2" SLIP X SLIP SCH. 80 PVC 90° ELBOW
26	1	SPEARS 1/2" SLIP X SLIP UNION
27	1	KBI 1/2" GATE VALVE
28	AR	1/2" SCH. 80 PVC PIPE
29	1	HAYWARD 1/2" PVC BULKHEAD FITTING
30	1	1/2" SCH 80 PVC STREET ELBOW
31	2	HAYWARD 1 1/2" PVC BULKHEAD FITTING
32	2	2 X 1 1/2" SCH. 80 PVC REDUCING BUSHING
33	1	KBI GVG-1000-S 1 1/2" GATE VALVE
34	2	SPEARS 1 1/2" SLIP X SLIP SCH. 80 PVC 90° ELBOW
35	1	1 1/2" BALL CHECK VALVE
36	2	1 1/2" SCH 80 PVC BOLT ON FLANGE
37	1	HAYWARD 1 1/2" TRUE UNION BALL VALVE
38	1	1 1/2" SCH 80 PVC STREET ELBOW
39	2	GRUNDFOS CR5-8 PUMP (STANDARD PUMP)
A	1	VFD PUMP OPTION
W	1	CHLORINATOR DEHUMIDIFIER
X	1	EAGLE MICROSYSTEMS 18" SQ. WEIGHT SCALE
Y	1	PRESSURE REGULATOR -V82-1 1/2" AS REQ'D
Z	2	1 1/2" ROTAMETERS BLUE-WHITE #F-42050LN

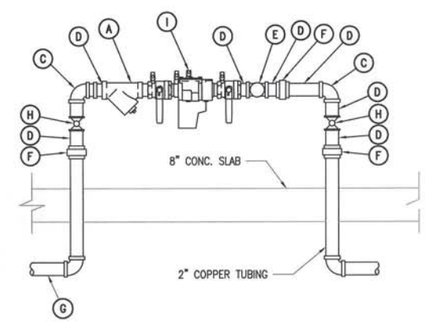

A. 2" Y-STRAINER
B. 2" TREADER NIPPLE, LENGTH AS REQUIRED TO CLEAR FLANGES (BRASS)
C. 2" ELBOW (BRASS)
D. 2" PIPE NIPPLE, LENGTH AS REQUIRED (BRASS)
E. 2" FIP SOLENOID VALVE
F. 2" UNION (BRASS)
G. CONNECT TO PRE-LUBE OUTLET ON PUMP DISCHARGE HEAD
H. 2" BRASS BALL VALVE
I. 2" REQUIRED PRESSURE BACKFLOW PREVENTION ASSEMBLY, FEBCO MODEL 860. O.A.E.

BACKFLOW PREVENTER DETAIL (3 / C-2)

NOT TO SCALE

REV	DATE	REVISION	APPR'D	REV BY

DIAL 811 DIGALERT — UNDERGROUND SERVICE ALERT — PLAY IT SAFE. DIAL BEFORE YOU DIG! — AT LEAST TWO WORKING DAYS PRIOR TO EXCAVATING

NOTE:

1. SHOWN DIMENSIONS ARE FOR REPRESENTATION ONLY. ACTUAL DIMENSION AND LAYOUT MAY VARY TO ACCOMMODATE IN EXISTING AVAILABLE SPACE. NO EXTRA PAYMENT WILL BE MADE TO ADJUST THE SKID IN AVAILABLE SPACE.

ACCU-TAB SYSTEM DETAIL (5 / M-10)

NOT TO SCALE

REGISTERED PROFESSIONAL ENGINEER — CHRISTOPHER SHEM HAWES — Exp. 6/30/2014 — No. 69578 — CIVIL — STATE OF CALIFORNIA — 6/18/14

PLANS PREPARED BY:

General Civil, Transportation, Municipal, Water and Wastewater Engineering, Planning, Construction Management, and Surveying

118 West Lime Avenue
Monrovia, Ca. 91016
Phone: (626) 357-0588
Fax: (626) 303-7957

CIVILTEC engineering inc.
Monrovia • Prescott • Phoenix

ERM

GROUNDWATER EXTRACTION AND TREATMENT SYSTEM COMBINED REMEDY SOURCE AREA OPERABLE UNIT, ROCKETS, FIREWORKS, AND FLARES SUPERFUND SITE

SCALE	AS SHOWN	DESIGNED BY	JM/BS/BD/CD	DRAWN BY	JM/BS/CD	DRAWING NUMBER	
DATE	SCALE	CHECKED	BD/CSH	APPROVED		JOB NUMBER	20131175.00

MECHANICAL DETAILS

ENVIRONMENTAL RESOURCES MANAGEMENT

REV — SHEET 51 — DISCIPLINE NO. M-13

X:\2013\20131175.00-ERM-RIALTO TREATMENT PLANT EXPANSION\DWG\TREATMENT PLANT\20131175.00 RIALTO-SHT51 M-13 MECHANICAL DETAILS.DWG (0)

LEGEND

PROCESS LINES

- EXISTING PROCESS PIPING
- EXISTING SECONDARY PROCESS PIPING
- MISCELLANEOUS PIPING
- EXISTING MISCELLANEOUS PIPING
- ELECTRICAL SIGNAL
- HYDRAULIC SIGNAL
- ELECTRICAL DIRECTION ARROW
- SIGNAL CONNECTION POINT
- FLOW ARROW FOR PROCESS PIPING
- PROCESS OR SIGNAL LINE
- PROCESS LINES CROSSING (NOT CONNECTED)
- INTERNAL SYSTEM SIGNAL LINK (SOFTWARE OR SIGNAL LINK)
- PRIMARY PROCESS LINE
- SECONDARY PROCESS LINE
- BACKWASH LINE
- BACKWASH LINE DISCHARGE
- DRAIN LINE
- AIR LINE
- INSTRUMENT TUBING
- SKID LIMITS / BOUNDARIES
- INSULATED LINE
- HEAT TRACED LINE
- INSULATED AND HEAT TRACED LINE
- LINE BROKEN & CONTINUED or SPACE FOR COPIED EQUIPMENT

P&ID INTERFACE SYMBOLS

FIELD DEVICE | MOUNTED *ON* MAIN PANEL (ACCESSIBLE) | MOUNTED *ON* AUX. PANEL (ACCESSIBLE) | MOUNTED *IN* PANEL (INACCESSIBLE)

- INSTRUMENT
- HMI OR OIT FUNCTION/ SUPERVISORY CONTROL AND DATA ACQUISITION (SCADA)
- PROGRAMMABLE LOGIC CONTROL, REMOTE I/O OR RTU
- COMPUTER FUNCTION

- AE – ANALYZER ELEMENT
- RUN YL G – INDICATING LIGHT
- HOA HS – HAND SWITCH
- LS – FLOAT SWITCH
- LE – ULTRASONIC OR RADAR LEVEL TRANSDUCER
- AAA BBB X – PILOT LIGHT X= LENS COLOR R=RED, G=GREEN, A=AMBER, B=BLUE

- ANALOG INPUT
- ANALOG OUTPUT
- DISCRETE INPUT
- DISCRETE OUTPUT
- DUAL CHANNEL CURRENT ISOLATOR
- PULSE INPUT
- PULSE OUTPUT

EQUIPMENT

- AERATION ROTOR
- AIR COMPRESSOR
- BLOWER
- CENTRIFUGAL PUMP
- GAS INJECTIONS
- METERING/SAMPLING PUMP
- ROTARY LOBE PUMP
- SAMPLER
- SLUICE GATE
- SUBMERSIBLE MIXER
- SUBMERSIBLE PUMP

EQUIPMENT TAG NUMBERS

AI
TIC 01 AI
TIC-01 – INSTRUMENT IDENTIFICATION
LOOP NUMBER
FUNCTIONAL IDENTIFICATION
ADDITIONAL IDENTIFICATION SEE ABBREVIATIONS AND HAND SWITCH DESIGNATIONS

SIGNALS

- ELECTRICAL
- DCS-PLC
- PNEUMATIC

VALVES & SYMBOLS

- AIR RELEASE VALVE
- ANGLE
- BACKPRESSURE SUSTAINING
- BALL VALVE
- BALL CHECK VALVE
- BUTTERFLY VALVE
- CAL VALVE
- DIAPHRAGM
- FLUME
- GATE VALVE
- GLOBE
- NEEDLE
- PLUG
- PLUG VALVE
- 3-WAY
- 4-WAY
- PRESSURE REDUCING
- RELIEF VALVE
- SOLENOID VALVE
- SWING CHECK VALVE
- WEIR
- WATER SURFACE
- Y-STRAINER

PROCESS AND INSTRUMENTATION DIAGRAM (P&ID) ABBREVIATIONS

A	AMPERE
AFD	ADJUSTABLE FREQUENCY DRIVE
AI	ANALOG INPUT
AIC	AMPS INTERRUPTING CAPACITY
AO	ANALOG OUTPUT
AR	AIR RELIEF
ARV	AIR RELIEF VALVE
AS	AIR SUPPLY
ATS	AUTOMATIC TRANSFER SWITCH
AUTO	AUTOMATIC
AFP	BELT FILTER PRESS
BRS	BRASS
BWL	BOTTOM WATER LEVEL
BW	BACK WASH
CB	CIRCUIT BREAKER
CL2	CHLORINE
CPM	CUSTOMER POWER MONITORING UNIT
CON	CONTACTOR
CS	CARBON STEEL
CU	COPPER, BARE
CV	CONTROL VALVE
DCS	DISTRIBUTED CONTROL SYSTEM
DI	DISCRETE INPUT
DO	DISSOLVED OXYGEN
DP	DIFFERENTIAL PRESSURE
DWG	DRAWING
ETM	ELAPSED TIME METER
ETMf	ELAPSED TIME METER (FAST SPEED)
ETMs	ELAPSED TIME METER (SLOW SPEED)
EOL	ELECTRIC OVERLOAD
ES	EMERGENCY STOP
EXIST	EXISTING
FA	FOUL AIR
FC	FAIL CLOSED
FE	FLOW ELEMENT
FLT	FILTER
FMR	FEEDER MANAGEMENT RELAY
FR	FORWARD-REVERSE
FS	FLOW SWITCH
FVNR	FULL VOLTAGE NON-REVERSING
FW	FINISHED WATER
GRN	GROUND
GAL	GALLONS
GCP	GENERATOR CONTROL PANEL
GPD	GALLONS PER DAY
GPH	GALLONS PER HOUR
GPM	GALLONS PER MINUTE
H, HI	HIGH
H2S	HYDROGEN SULFIDE
HMI	HUMAN MACHINE INTERFACE
HOA	HAND-OFF-AUTO
I	CURRENT
ICR	INTERMITTENT CYCLE
IO	REACTOR INPUT/OUPUT
IOE	INTERNAL-OFF-EXTERNAL
JB	JUNCTION BOX
L, LO	LOW
LAN	LOCAL AREA NETWORK
LC	LOOP CONTROLLER
LCP	LOCAL CONTROL PANEL
L/O/A/R	LOWER/OFF/AUTO/RAISE
LOS	LOCK-OFF-STOP
LR	LOCAL/REMOTE
LS	LEVEL SWITCH
M	MOTOR
MA	MANUAL/AUTO, MILLIAMP
MC	MANUFACTURE CABLE
MCC	MOTOR CONTROL CENTER
MCP	MOTOR CIRCUIT PROTECTOR
MFR(S)	MANUFACTURER(S)
MGD	MILLION GALLONS PER DAY
MGL	MILLIGRAMS PER LITER
MH	MANHOLE
MLR	MIXED LIQUOR RETURN
MO	MOISTURE
MOD	MODULATED
MOG	MOTOR OPERATED GATE
MS	MOISTURE SWITCH
MTU	MASTER TELEMETRY UNIT
NPW	NON-POTABLE WATER
N.C.	NORMALLY CLOSED
N.O.	NORMALLY OPEN
NS	NITROGEN SUPPLY
NTU	TURBIDITY
O/C	OPEN / CLOSE
OCA	OPEN-CLOSE-AUTO
OCR	OPEN-CLOSE-REMOTE
OIT	OPERATOR INTERFACE TERMINAL
OL	OVERLOAD
OO	ON/OFF (MAINTAINED)
OOA	ON-OFF-AUTO
OOR	ON-OFF-REMOTE
OSC	OPEN-STOP-CLOSE
PAH	PRESSURE ALARM HIGH
PER	PERMISSIVE
PID	PROPORTIONAL INTEGRAL DESIGN
PLC	PROGRAMMABLE LOGIC CONTROLLER
PNL	PANEL
PO	PULSE OUTPUT
POS	POSITION
POT	POTENTIOMETER
PPH	POUNDS PER HOUR
PPM	PARTS PER MILLION
PR	PAIR
PRES	PRESSURE
PRV	PRESSURE RELEASE VALVE
PS	PRESSURE SWITCH
PSI	POUNDS PER SQUARE INCH
PV	PROCESS VARIABLE
RAS	RETURN ACTIVATED SLUDGE
RAW	RAW WATER
REM	REMOTE
RF	RADIO FREQUENCY
RIO	REMOTE INPUT OUTPUT
RR	RESIN RETURN
RS	RAW SEWAGE
RSP	RAW SEWAGE PUMP
RST	RESET
RTU	REMOTE TELEMETRY UNIT
RUNf	RUN (FAST SPEED)
RUNs	RUN (SLOW SPEED)
RW	RAW WATER
SB	SLUDGE BLANKET
SEQ	SERVICE ENTRANCE EQUIPMENT
SES	SERVICE ENTRANCE SECTION
SLC	SINGLE LOOP CONTROLLER
SLG	SLUICE GATE
SLOS	START-LOCK-OFF-STOP
SO2	SULFUR DIOXIDE
SOV	SOLENOID OPERATED VALVE
SP	SET POINT
SPD	SPEED
SPR	SPARE
SR	SUPPLY RESIN
SS	START/STOP (MAINTAINED)
SSS	SOLID STATE STARTER (SOFT START)
TAH	TEMPERATURE ALARM HIGH
T/M	TEMPERATURE AND/OR MOISTURE
TEMP	TEMPERATURE
TS	TEMPERATURE SWITCH
TSS	TOTAL SUSPENDED SOLIDS
TWL	TOP WATER LEVEL
TW	TREATED WATER
UG	UNDERGROUND
USD	UP/STOP/DOWN
V	VOLT
VP	VENDOR EQUIPMENT
VFD	VARIABLE FREQUENCY DRIVE
VTP	VERTICAL TURBINE PUMP
W	WATT, WIRE
WAS	WASTE ACTIVATED SLUDGE
ZS	POSITION (i.e. LIMIT) SWITCH

FUNCTIONAL IDENTIFICATION

FIRST LETTER

- A – ANALYZING
- C – CONDUCTIVITY
- D – DIFFERENTIAL
- E – VOLTAGE
- F – FLOW
- G – GAUGE
- H – HAND
- I – CURRENT (ELECTRICAL)
- K – TIME
- L – LEVEL
- M – MOTOR
- O – TORQUE
- P – PRESSURE
- R – RUN
- S – SPEED FREQUENCY
- T – TEMPERATURE

OPTIONAL MIDDLE LETTER(S)

- A – ALARM
- C – CONTROL
- I – INDICATING
- P – PRESSURE
- Q – TOTALIZING
- R – RELEASE
- X – UNCLASSIFIED
- Y – EVENT, STATE, OR PRESENCE
- Z – POSITION

LAST LETTER

- C – CONTROLLER
- E – ELEMENT
- H – HIGH
- I – INDICATOR
- L – LOW
- Q – TOTALIZER
- R – RECORDER
- S – SWITCH
- T – TRANSMITTER
- V – VALVE

HAND SWITCH DESIGNATIONS

ES	EMERGENCY STOP
HOA	HAND-OFF-AUTO
HOR	HAND-OFF-REMOTE
HORA	HAND-OFF-REMOTE-AUTO
JOA	JOG-OFF-AUTO
LOAR	LOWER-OFF-AUTO-RAISE
LOR	LOCAL-OFF-REMOTE
LR	LOCAL-REMOTE
OC	OPEN-CLOSE
OO	ON-OFF

VALVE ACCESSORIES

DIAPHRAGM ACTUATOR | PISTON ACTUATOR | MOTORIZED ACTUATOR

- DOUBLE ACTING (AIR TO AIR) (FAIL LAST)
- SPRING TO OPEN (AIR TO CLOSE) (FAIL OPEN) (NORMALLY OPEN)
- SPRING TO CLOSE (AIR TO OPEN) (FAIL CLOSE) (NORMALLY CLOSED)
- w/ TRAVEL STOP
- DOUBLE ACTING (POWER TO MOVE) (FAIL LAST)
- SPRING TO OPEN (POWER TO CLOSE) (FAIL OPEN) (NORMALLY OPEN)
- SPRING TO CLOSE (POWER TO OPEN) (FAIL CLOSE) (NORMALLY CLOSED)
- w/ TRAVEL STOP
- RELIEF
- REGULATED
- SOLENOID

PROCESS LINE ACCESSORIES

- FLOW DIRECTION
- DRAIN (TO GRADE, UNLESS OTHERWISE SPECIFIED)
- REDUCER
- OPEN SPECTACLE BLIND
- CLOSED SPECTACLE BLIND
- TANK CONNECTIONS (FRONT & SIDE VIEWS)
- FLEXIBLE COUPLING
- FLANGE
- QUICK CONNECT
- HOSE CONNECTION
- FLEXIBLE HOSE
- CAP
- RESIN TRAP
- STRAINER

INSTRUMENT ACCESSORIES

- FLOW ORFICE
- MAGNETIC FLOW METER
- SONIC FLOW METER
- TURBINE FLOW METER
- VORTEX FLOW METER
- MCC – CONTROLLED BY MOTOR CONTROL CENTER
- IA – I/P CONVERTER
- RUPTURE DISC
- FI – ROTAMETER
- ISOLATION/SAMPLING BALL VALVE
- INTERLOCK
- VFD – CONTROLLED BY VARIABLE FREQUENCY DRIVE

REV	DATE	REVISION	APPR'D	REV BY

REGISTERED PROFESSIONAL ENGINEER – CHRISTOPHER SHEM HAWES – Exp. 6/30/2014 – No. 69578 – CIVIL – STATE OF CALIFORNIA – 6/18/14

PLANS PREPARED BY:

General Civil, Transportation, Municipal, Water and Wastewater Engineering, Planning, Construction Management, and Surveying

118 West Lime Avenue
Monrovia, Ca. 91016
Phone: (626) 357-0588
Fax: (626) 303-7957

CIVILTEC engineering inc.
Monrovia • Prescott • Phoenix

ERM

GROUNDWATER EXTRACTION AND TREATMENT SYSTEM COMBINED REMEDY SOURCE AREA OPERABLE UNIT, ROCKETS, FIREWORKS, AND FLARES SUPERFUND SITE

SCALE	AS SHOWN	DESIGNED BY	JM/BS/BD/CD	DRAWN BY	JM/BS/CD	DRAWING NUMBER	
DATE	SCALE	CHECKED	BD/CSH	APPROVED		JOB NUMBER	2013175.00

(P & ID) ABBREVIATION, SYMBOLS & GENERAL NOTES

ENVIRONMENTAL RESOURCES MANAGEMENT

REV | SHEET 52 | DISCIPLINE NO. PID-1

X:\2013\2013175.00-ENA-RIALTO TREATMENT PLANT EXPANSION\DWG\TREATMENT PLANT\2013175.00 RIALTO-SHT52-PID-1 LEGENDABBR.DWG (06-02-14

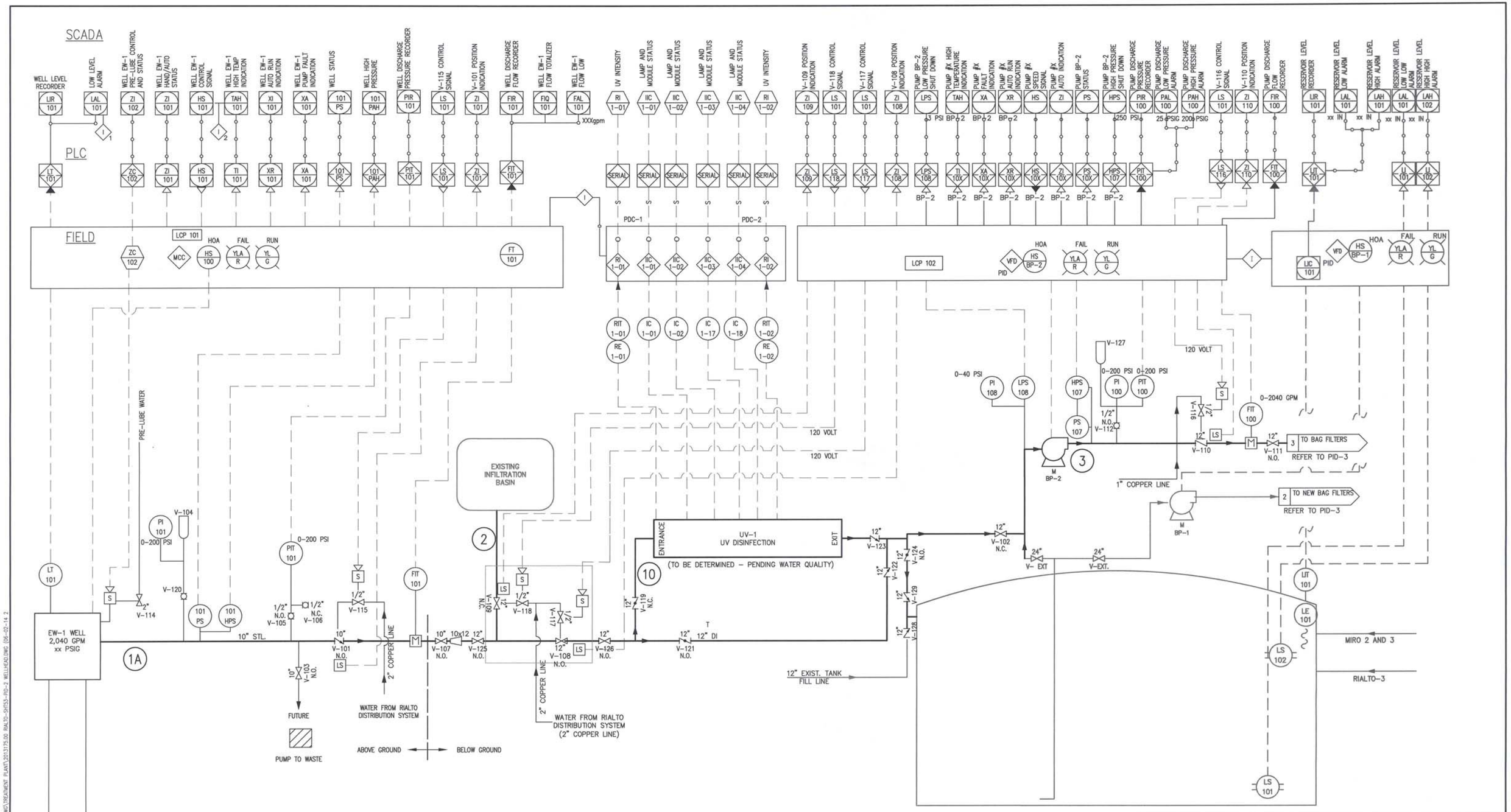

REV	DATE	REVISION	APPR'D	REV BY

PLANS PREPARED BY:

General Civil, Transportation, Municipal, Water and Wastewater Engineering, Planning, Construction Management, and Surveying

118 West Lime Avenue
Monrovia, Ca. 91016
Phone: (626) 357-0588
Fax: (626) 303-7957

CIVILTEC engineering inc.
Monrovia • Prescott • Phoenix

ERM

REGISTERED PROFESSIONAL ENGINEER — CHRISTOPHER SHEM HAWES — Exp. 6/30/2014 — No. 69578 — CIVIL — STATE OF CALIFORNIA — 6/18/14

GROUNDWATER EXTRACTION AND TREATMENT SYSTEM COMBINED REMEDY SOURCE AREA OPERABLE UNIT, ROCKETS, FIRE WORKS, AND FLARES SUPERFUND SITE

SCALE	AS SHOWN	DESIGNED BY	JM/BS/BD/CD	DRAWN BY	JM/BS/CD	DRAWING NUMBER	
DATE	SCALE	CHECKED	BD/CSH	APPROVED		JOB NUMBER	2013175.00

REV

SHEET 53

DISCIPLINE NO. PID-2

WELLHEAD AND BOOSTER PUMP

ENVIRONMENTAL RESOURCES MANAGEMENT

X:\2013\2013175.00-ERM-RIALTO TREATMENT PLANT EXPANSION\DWG\TREATMENT PLANT\2013175.00 RIALTO-SHT53-PID-2 WELLHEAD.DWG (06-02-14 2

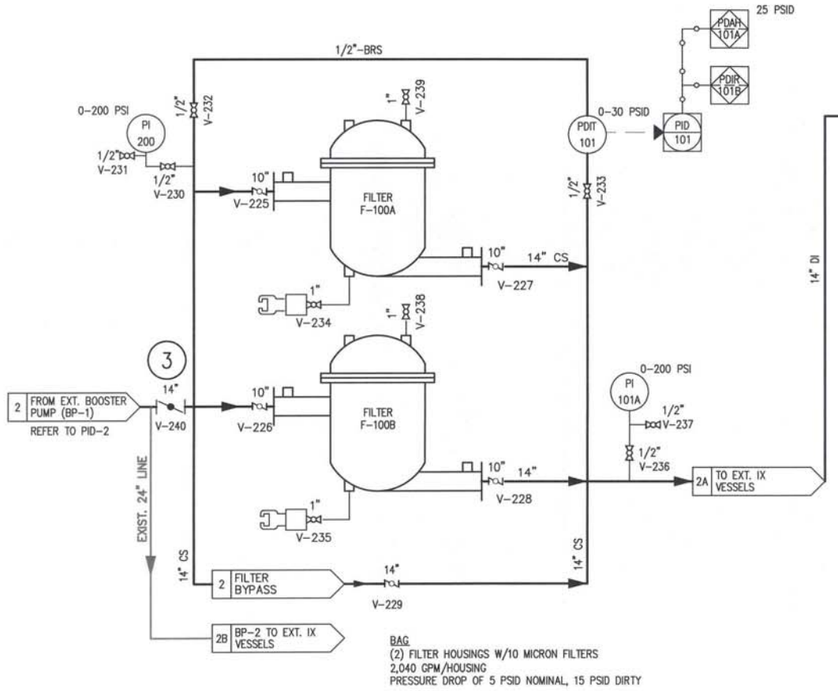

BAG FILTERS FOR EXISTING IX AND GAC SYSTEM

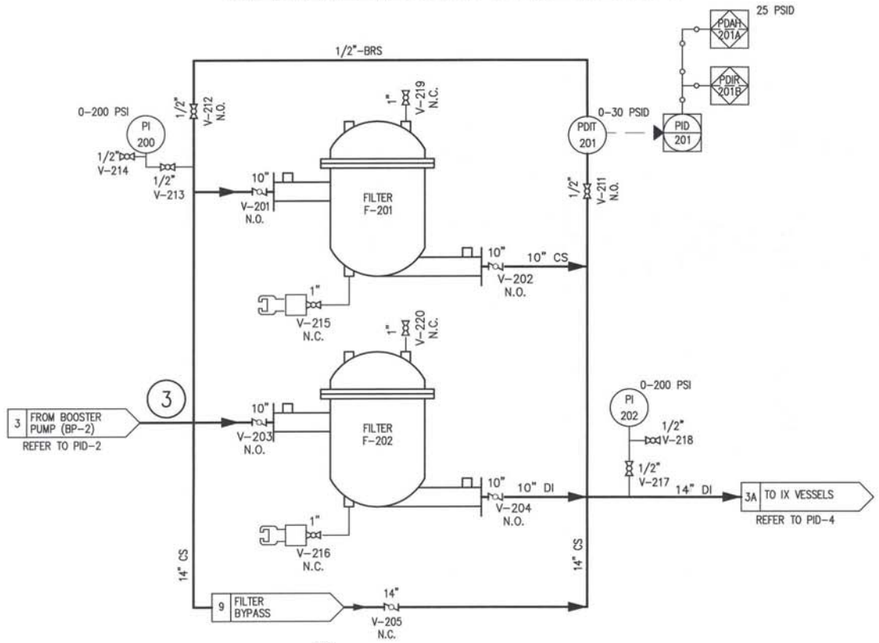

BAG FILTERS FOR NEW IX AND GAC SYSTEM

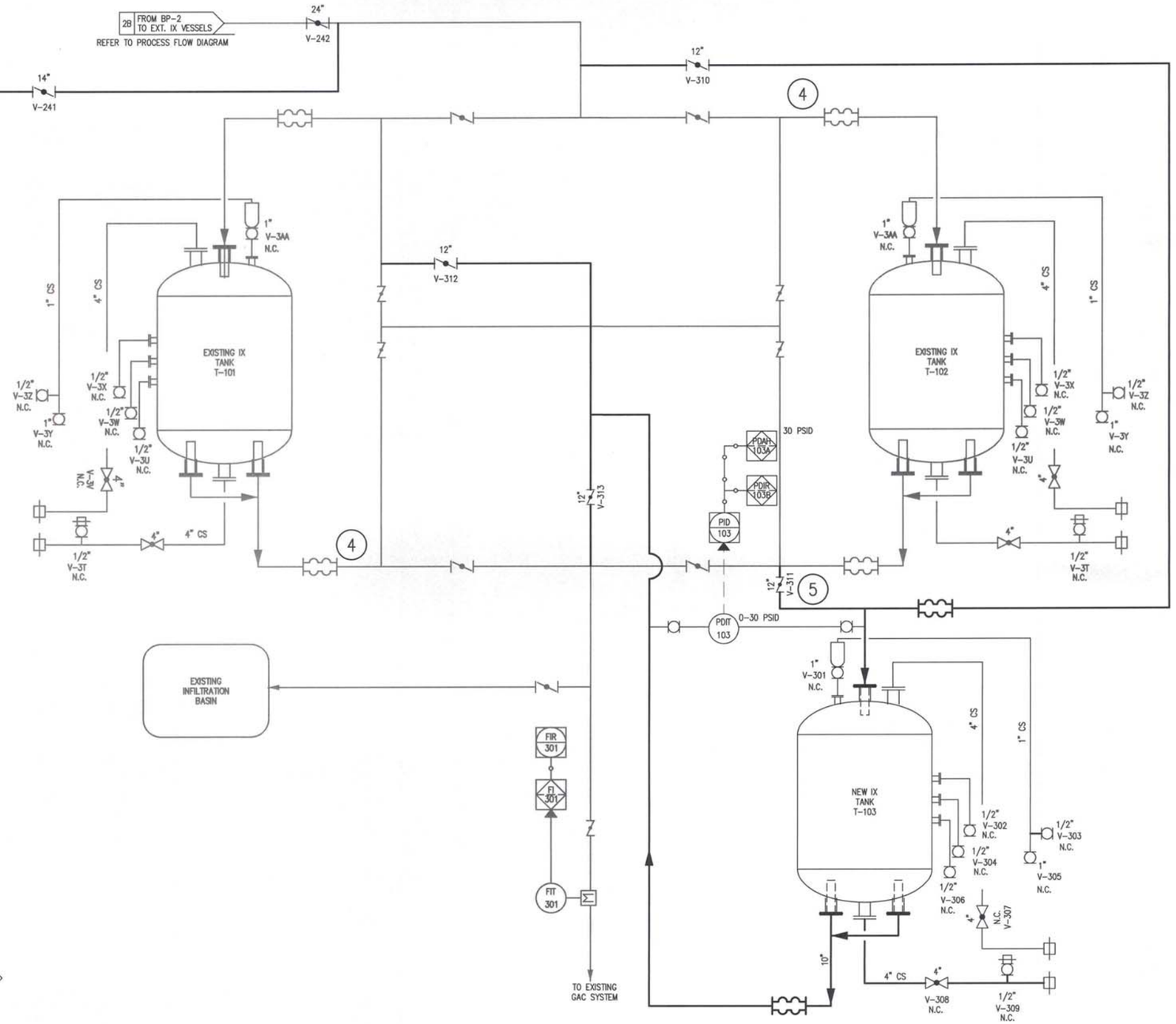

3 REFER TO PROCESS FLOW DIAGRAM

REV	DATE	REVISION	APPR'D	REV BY

REGISTERED PROFESSIONAL ENGINEER CHRISTOPHER JHEM HAWES Exp. 6/30/2014 No. 69578 CIVIL STATE OF CALIFORNIA 6/18/14

PLANS PREPARED BY:

General Civil, Transportation, Municipal, Water and Wastewater Engineering, Planning, Construction Management, and Surveying

118 West Lime Avenue
Monrovia, Ca. 91016
Phone: (626) 357-0588
Fax: (626) 303-7957

CIVILTEC engineering inc.
Monrovia • Prescott • Phoenix

ERM

GROUNDWATER EXTRACTION AND TREATMENT SYSTEM COMBINED REMEDY SOURCE AREA OPERABLE UNIT, ROCKETS, FIREWORKS, AND FLARES SUPERFUND SITE

SCALE	AS SHOWN	DESIGNED BY	JM/BS/BD/CD	DRAWN BY	JM/BS/CD	DRAWING NUMBER	
DATE	SCALE	CHECKED	BD/CSH	APPROVED		JOB NUMBER	2013175.00

REV

SHEET 54

DISCIPLINE NO. PID-3

BAG FILTER AND NEW VESSEL FOR EXISTING IX SYSTEM

ENVIRONMENTAL RESOURCES MANAGEMENT

X:\2013\2013175.00-ERM-RALTO TREATMENT PLANT EXPANSION\DWG\TREATMENT PLANT\2013175.00 RALTO-SHT54-PID-3 BAG FLTR AND VESSELS.DW

LEGEND

BW – BACKWASH WATER
CA – COMPRESSED AIR
FC – FLUSH CONNECTION
RF – RESIN FILL
RO – RESIN OUT
RW – RAW WATER
SP – SAMPLE PORT
TW – TREATED WATER
V – VENT

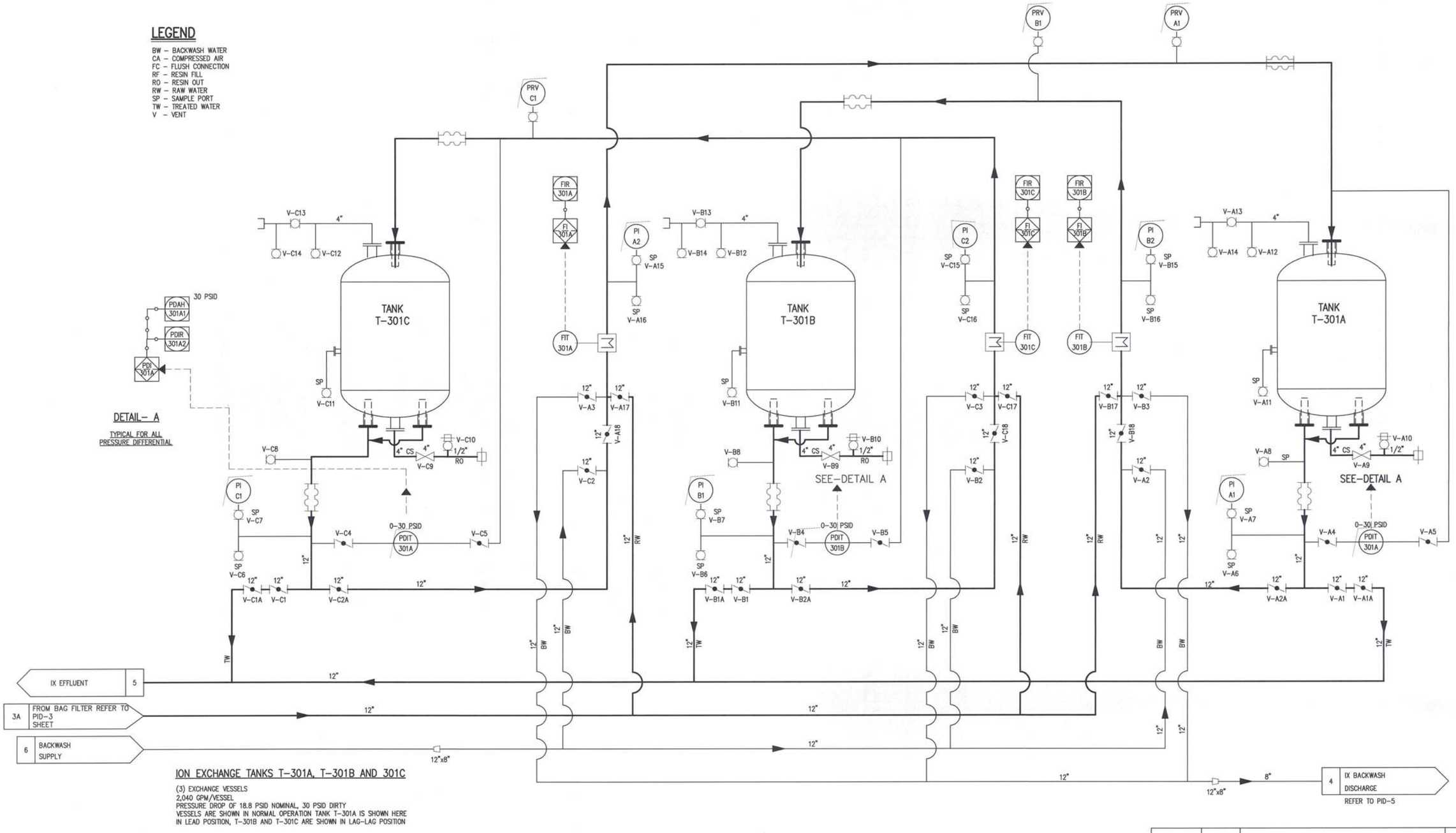

ION EXCHANGE TANKS T-301A, T-301B AND 301C

(3) EXCHANGE VESSELS
2,040 GPM/VESSEL
PRESSURE DROP OF 18.8 PSID NOMINAL, 30 PSID DIRTY
VESSELS ARE SHOWN IN NORMAL OPERATION TANK T-301A IS SHOWN HERE IN LEAD POSITION, T-301B AND T-301C ARE SHOWN IN LAG-LAG POSITION

REV	DATE	REVISION	APPR'D	REV BY

DIAL 811 DIGALERT
UNDERGROUND SERVICE ALERT
PLAY IT SAFE. DIAL BEFORE YOU DIG!
AT LEAST TWO WORKING DAYS PRIOR TO EXCAVATING

REGISTERED PROFESSIONAL ENGINEER CHRISTOPHER CHEM HAWES Exp. 6/30/2014 No. 69578 CIVIL STATE OF CALIFORNIA 6/18/14

PLANS PREPARED BY:
General Civil, Transportation, Municipal, Water and Wastewater Engineering, Planning, Construction Management, and Surveying

118 West Lime Avenue
Monrovia, Ca. 91016
Phone: (626) 357-0588
Fax: (626) 303-7957
CIVILTEC engineering inc.
Monrovia • Prescott • Phoenix

ERM

GROUNDWATER EXTRACTION AND TREATMENT SYSTEM COMBINED REMEDY SOURCE AREA OPERABLE UNIT, ROCKETS, FIREWORKS, AND FLARES SUPERFUND SITE

SCALE	AS SHOWN	DESIGNED BY	JM/BS/BD/CD	DRAWN BY	JM/BS/CD	DRAWING NUMBER	
DATE	SCALE	CHECKED	BD/CSH	APPROVED		JOB NUMBER	20131175.00

ION EXCHANGE VESSELS

ENVIRONMENTAL RESOURCES MANAGEMENT

REV
SHEET 55
DISCIPLINE NO. PID-4

X:\2015\20131175.00-ERM-RIALTO TREATMENT PLANT EXPANSION\DWG\TREATMENT PLANT\20131175.00 RIALTO-SHT55-PID-4 ION-EXCHANGETK.DWG (06-0

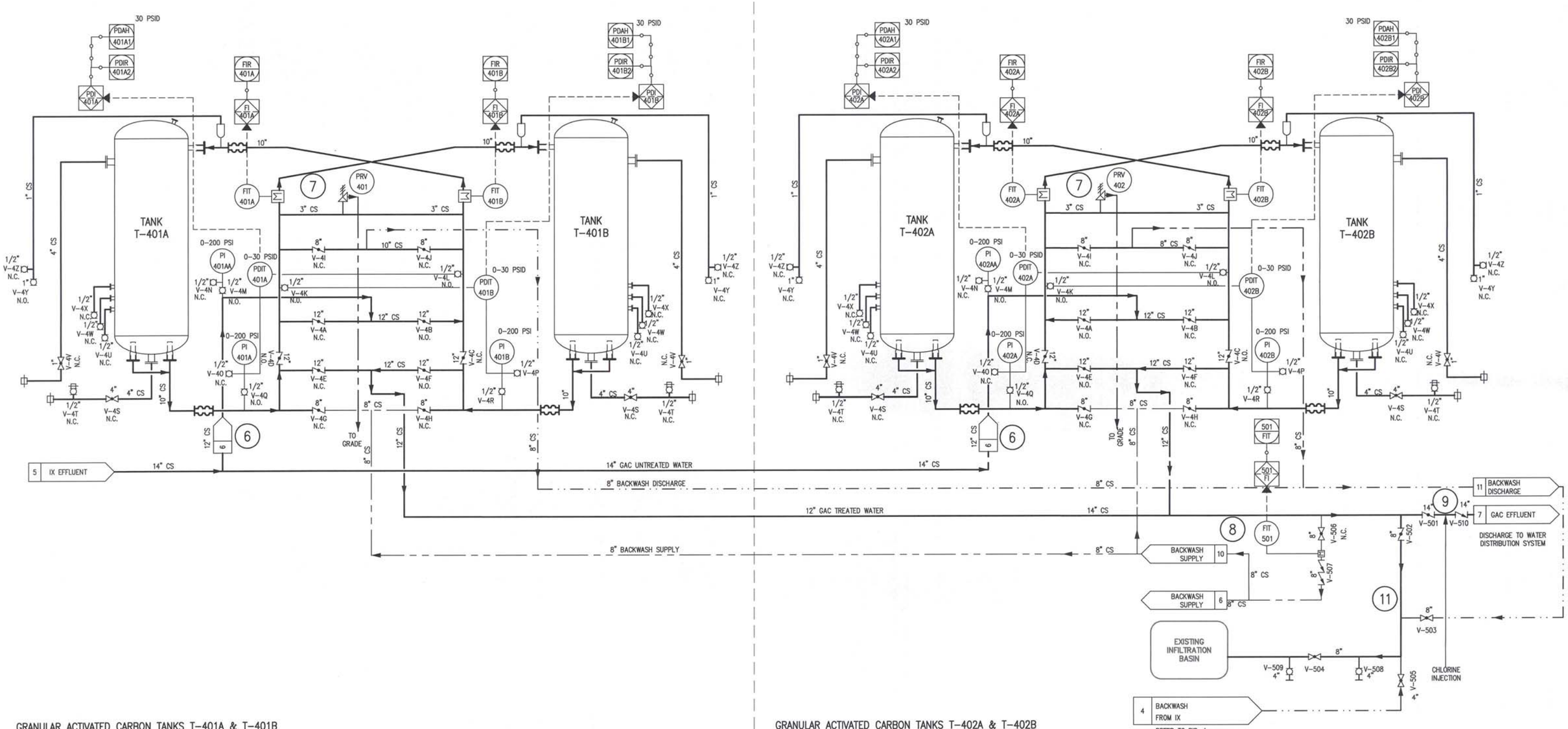

GRANULAR ACTIVATED CARBON TANKS T-401A & T-401B

(2) VESSELS PER SYSTEM W/ FILTRASORB 300 GAC
1,120 GPM/SYSTEM
PRESSURE DROP OF 11.2 PSID NOMINAL, 30 PSID DIRTY
VESSELS ARE SHOWN IN NORMAL OPERATION TANK T-401A IS SHOWN HERE
IN LEAD POSITION AND T-401B ARE SHOWN IN LAG POSITION

(9) REFER TO PROCESS FLOW DIAGRAM

GRANULAR ACTIVATED CARBON TANKS T-402A & T-402B

(2) VESSELS PER SYSTEM W/ FILTRASORB 300 GAC
1,020 GPM/SYSTEM
PRESSURE DROP OF 11.2 PSID NOMINAL, 30 PSID DIRTY
VESSELS ARE SHOWN IN NORMAL OPERATION TANK T-402B IS SHOWN HERE
IN LEAD POSITION AND T-402B ARE SHOWN IN LAG POSITION

REV	DATE	REVISION	APPR'D	REV BY

REGISTERED PROFESSIONAL ENGINEER CHRISTOPHER HEM HAWES Exp. 6/30/2014 No. 69578 CIVIL STATE OF CALIFORNIA 6/18/14

PLANS PREPARED BY:
General Civil, Transportation, Municipal, Water and Wastewater Engineering, Planning, Construction Management, and Surveying
118 West Lime Avenue
Monrovia, Ca. 91016
Phone: (626) 357-0588
Fax: (626) 303-7957
CIVILTEC engineering inc.
Monrovia • Prescott • Phoenix
ERM

GROUNDWATER EXTRACTION AND TREATMENT SYSTEM COMBINED REMEDY SOURCE AREA OPERABLE UNIT, ROCKETS, FIREWORKS, AND FLARES SUPERFUND SITE

SCALE	AS SHOWN	DESIGNED BY	JM/BS/BD/CD	DRAWN BY	JM/BS/CD	DRAWING NUMBER	
DATE	SCALE	CHECKED	BD/CSH	APPROVED		JOB NUMBER	20131175.00

REV

SHEET 56

DISCIPLINE NO. PID-5

LGAC-PROCESS AND INSTRUMENTATION DIAGRAM

ENVIRONMENTAL RESOURCES MANAGEMENT

A:\2013\2013175.00-ERM-RALTO TREATMENT PLANT EXPANSION\DWG\TREATMENT PLANT\2013175.00 RALTO-SHT56-PID-5-LGAC-PROCESS&INSTR.DWG

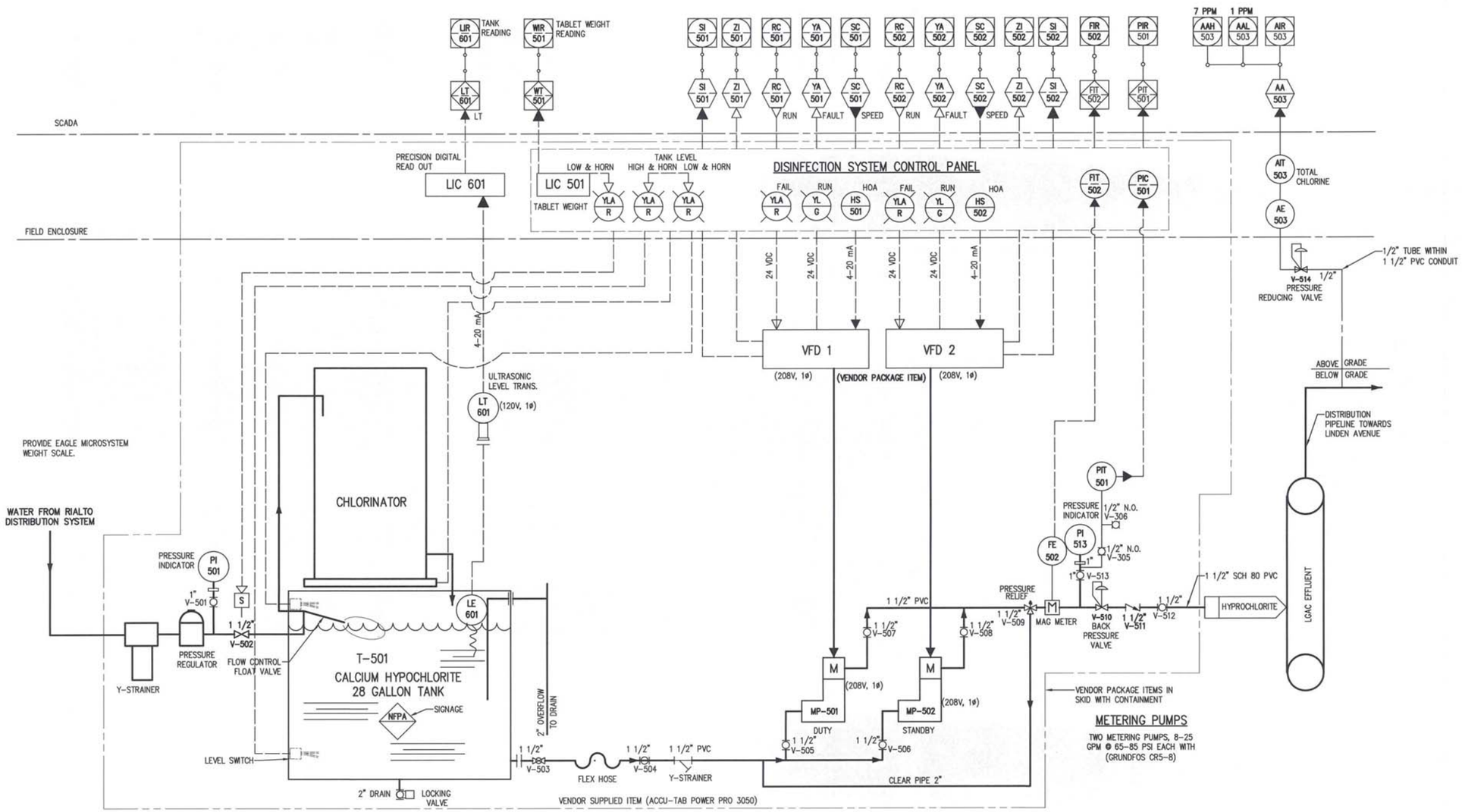

REV	DATE	REVISION	APPR'D	REV BY

DIAL 811
DIGALERT
UNDERGROUND SERVICE ALERT
PLAY IT SAFE. DIAL BEFORE YOU DIG!
AT LEAST TWO WORKING DAYS PRIOR TO EXCAVATING

REGISTERED PROFESSIONAL ENGINEER
CHRISTOPHER SHEM HAWES
Exp. 6/30/2014
No. 69578
CIVIL
STATE OF CALIFORNIA
6/18/14

PLANS PREPARED BY:

General Civil, Transportation, Municipal, Water and Wastewater Engineering, Planning, Construction Management, and Surveying

118 West Lime Avenue
Monrovia, Ca. 91016
Phone: (626) 357-0588
Fax: (626) 303-7957

CIVILTEC engineering inc.
Monrovia • Prescott • Phoenix

ERM

GROUNDWATER EXTRACTION AND TREATMENT SYSTEM COMBINED REMEDY SOURCE AREA OPERABLE UNIT, ROCKETS, FIREWORKS, AND FLARES SUPERFUND SITE

SCALE	AS SHOWN	DESIGNED BY	JM/BS/BD/CD	DRAWN BY	JM/BS/CD	DRAWING NUMBER	
DATE	SCALE	CHECKED	BD/CSH	APPROVED		JOB NUMBER	2013175.00

REV

SHEET 57

DISCIPLINE NO. PID-6

DISINFECTION SYSTEM
CALCIUM HYPOCHLORITE

ENVIRONMENTAL RESOURCES MANAGEMENT

X:\2013\2013175.00-ERM-RIALTO TREATMENT PLANT EXPANSION\DWG\TREATMENT PLANT\2013175.09 RIALTO-SHEET-PID-6-DISINFECTION SYSTEM.DWG

VALVE AND EQUIPMENT SCHEDULE

VALVE NUMBER	LOCATION	SPEC	QUANTITY	TYPE	SIZE, INCH	SERVICE	CONNECTION	MAKE & MODEL
V-101	EW-1 DISCHARGE	40 05 23	1	CLA-VAL	10"	PUMP CONTROL VALVE	FLANGED	CLA VAL MODEL 60-11
V-102	BP-2 SUCTION	40 05 23	1	BUTTERFLY VALVE	12"	BP-2 SUCTION FROM EW-1	FLANGED	PRATT MKII
V-103	EW-1 PUMP TO WASTE (FUTURE)	40 05 23	1	RESILIENT GATE VALVE	10"	EW-1 PUMP TO WASTE (FUTURE)	FLANGED	M AND H VALVE, STYLE 7561
V-104	PRESSURE INDICATOR-101	40 05 23	1	AIR RELEASE VALVE	1/2"	PRESSURE INDICATOR	THREADED	
V-105	PRESSURE TRANSMITTER -101	40 05 23	1	BALL	1/2"	PRESSURE TRANSMITTER -101	THREADED	PARKER MODEL VP50SS
V-106	PRESSURE TRANSMITTER -101	40 05 23	1	BALL	1/2"	PRESSURE TRANSMITTER -101	THREADED	PARKER MODEL VP50SS
V-107	EW-1 DISCHARGE	40 05 23	1	RESILIENT GATE VALVE	10"	EW-1 PUMP DISCHARGE LINE	FLANGED	M AND H VALVE, STYLE 7561
V-108	CLOSE BY INFILTRATION BASIN	40 05 23	1	SOLENOID CONTROL VALVE		EW-1 PUMP DISCHARGE LINE	FLANGED	CLA VAL MODEL 61-02
V-109	CLOSE BY INFILTRATION BASIN	40 05 23	1	SOLENOID CONTROL VALVE		EW-1 PUMP DISCHARGE LINE - INFILTRATION BASIN	FLANGED	CLA VAL MODEL 61-02
V-110	BP-2 DISCHARGE	40 05 23	1	PUMP CONTROL VALVE	12"	BP-2 DISCHARGE TO TREATMENT SYSTEM	FLANGED	CLA VAL MODEL 60-11
V-111	BP-2 DISCHARGE	40 05 23	1	RESILIENT GATE VALVE	12"	BP-2 DISCHARGE TO TREATMENT SYSTEM	FLANGED	M AND H VALVE, STYLE 7561
V-112	PRESSURE TRANSMITTER -100	40 05 23	1	BALL	1/2"	PRESSURE TRANSMITTER -100	THREADED	PARKER MODEL VP50SS
V-113	PRESSURE TRANSMITTER -100	40 05 23	1	BALL	1/2"	PRESSURE TRANSMITTER -100	THREADED	PARKER MODEL VP50SS
V-114	EW-1 PRE-LUBE LINE	40 05 23	1	SOLENOID VALVE	2"	PRE LUBE LINE FOR EW-1		ASCO REDHAT
V-115	PUMP CONTROL VALVE - V-101	40 05 23	1	SOLENOID VALVE	1/2"	PUMP VALVE CONTROL	THREADED	ASCO REDHAT
V-116	CONTROL VALVE - V-110	40 05 23	1	SOLENOID VALVE	1/2"	FLOW DIRECTION CONTROL VALVE	THREADED	ASCO REDHAT
V-117	CONTROL VALVE - V-108	40 05 23	1	SOLENOID VALVE	1/2"	FLOW DIRECTION CONTROL VALVE	THREADED	ASCO REDHAT
V-118	ONTROL VALVE - V-109	40 05 23	1	SOLENOID VALVE	1/2"	FLOW DIRECTION CONTROL VALVE	THREADED	ASCO REDHAT
V-119	UPSTREAM OF UV SYSTEM	40 05 23	1	BUTTERFLY VALVE	12"	EW-1 DISCHARGE TO UV DISINFECTION	FLANGED	PRATT MKII
V-120	PRESSURE INDICATOR-101	40 05 23	1	BALL	1"	EW-1 DISCHARGE ISOLATION TO RESERVOIR LINE	THREADED	PARKER MODEL VP50SS
V-121	UV SYSTEM	40 05 23	1	BUTTERFLY VALVE	12"	EW-1 DISCHARGE - BYPASS UV DISINFECTION	FLANGED	PRATT MKII
V-122	UV SYSTEM	40 05 23	1	CHECK VALVE	12"	EW-1 DISCHARGE - BYPASS UV DISINFECTION	FLANGED	M AND H VALVE, STYLE 259
V-123	UV SYSTEM	40 05 23	1	CHECK VALVE	12"	EW-1 DISCHARGE - UV DISINFECTION DISCHRGE SIDE	FLANGED	M AND H VALVE, STYLE 259
V-124	RESERVOIR LINE FROM UV	40 05 23	1	BUTTERFLY VALVE	12"	EW-1 DISCHARGE - TO EXT. EQ. TANK	FLANGED	PRATT MKII
V-125	UPSTREAM OF VAULT	40 05 23	1	GATE VALVE	12"	EW-1 DISCHARGE - TO EXT. EQ. TANK	FLANGED	M AND H VALVE, STYLE 7561
V-126	DOWNSTREAM OF VAULT	40 05 23	1	GATE VALVE	12"	EW-1 DISCHARGE - TO EXT. EQ. TANK	FLANGED	M AND H VALVE, STYLE 7561
V-127	BP-2 DISCHARGE	40 05 23	1	AIR/VACCUM RELEASE	1"	BP-2 DISCHARGE TO TREATMENT SYSTEM	THREADED	APCO COMBINATION AIR VALVE
V-128	EXIST. EQ. TANK FILL LINE		1	BUTTERFLY VALVE	12"	RAW WATER	FLANGED	
V-129	NEW EQ. TANK FILL LINE		1	CHECK VALVE	12"	RAW WATER	WAFER	BRAY CHECK RITE
V-501	EFFLUENT DISCHARGE	40 05 23	1	BUTTERFLY VALVE	14"		FLANGED	PRATT MKII
V-502	EFFLUENT DISCHARGE	40 05 23	1	BUTTERFLY VALVE	8"		FLANGED	PRATT MKII
V-505	BACKWASH DISCHARE	40 05 23	1	GATE VALVE	4"	BWO-C2	FLANGED	M AND H VALVE, STYLE 7561
V-503	BACKWASH DISCHARE	40 05 23	1	GATE VALVE	8"	FROM LGAC	FLANGED	M AND H VALVE, STYLE 7561
V-504	BACKWASH DISCHARE	40 05 23	1	GATE VALVE	8"	FROM LGAC	FLANGED	M AND H VALVE, STYLE 7561
V-506	BACKWASH SUPPLY	40 05 23	1	GATE VALVE	8"	BACKWASH SUPPLY	FLANGED	M AND H VALVE, STYLE 7561
V-507	BACKWASH SUPPLY	40 05 23	1	DOUBLE CHECK WITH ISOLATION	8"	BACKWASH SUPPLY	FLANGED	FEBCO 825YD-OSY
V-508 & V-509	BACKWASH SUPPLY	40 05 23	2	BALL VALVE	4"	BACKWASH SUPPLY	FLANGED	PARKER MODEL VP50SS
V-510	EFFLUENT DISCHARGE	40 05 23	1	CHECK VALVE	14"		WAFER	BRAY CHECK RITE MODEL 210, CL 350
V-201	UPSTREAM BAG FILTER 201	40 05 23	1	BUTTERFLY VALVE	10"	BAG/CARTRIDGE FILTER	FLANGED	PRATT MKII
V-202	DOWNSTREAM BAG FILTER 201	40 05 23	1	BUTTERFLY VALVE	10"	BAG/CARTRIDGE FILTER	FLANGED	PRATT MKII
V-203	UPSTREAM BAG FILTER 202	40 05 23	1	BUTTERFLY VALVE	10"	BAG/CARTRIDGE FILTER	FLANGED	PRATT MKII
V-204	DOWNSTREAM BAG FILTER 202	40 05 23	1	BUTTERFLY VALVE	10"	BAG/CARTRIDGE FILTER	FLANGED	PRATT MKII
V-205	BAG FILTER BYPASS	40 05 23	1	BUTTERFLY VALVE	14"	BAG/CARTRIDGE FILTER	FLANGED	PRATT MKII
V-211	BAG FILTER	40 05 23	1	BALL VALVE	1/2"	BAG/CARTRIDGE FILTER	THREADED	PARKER MODEL VP50SS
V-212	BAG FILTER	40 05 23	1	BALL VALVE	1/2"	BAG/CARTRIDGE FILTER	THREADED	PARKER MODEL VP50SS
V-213	BAG FILTER	40 05 23	1	BALL VALVE	1/2"	BAG/CARTRIDGE FILTER	THREADED	PARKER MODEL VP50SS
V-214	BAG FILTER	40 05 23	1	BALL VALVE	1/2"	BAG/CARTRIDGE FILTER	THREADED	PARKER MODEL VP50SS
V-215	BAG FILTER	40 05 23	1	BALL VALVE	1"	BAG/CARTRIDGE FILTER	THREADED	PARKER MODEL VP50SS
V-216	BAG FILTER	40 05 23	1	BALL VALVE	1"	BAG/CARTRIDGE FILTER	THREADED	PARKER MODEL VP50SS
V-217	BAG FILTER	40 05 23	1	BALL VALVE	1/2"	BAG/CARTRIDGE FILTER	THREADED	PARKER MODEL VP50SS
V-218	BAG FILTER	40 05 23	1	BALL VALVE	1/2"	BAG/CARTRIDGE FILTER	THREADED	PARKER MODEL VP50SS
V-219	BAG FILTER	40 05 23	1	BALL VALVE	1"	BAG/CARTRIDGE FILTER	THREADED	PARKER MODEL VP50SS
V-220	BAG FILTER	40 05 23	1	BALL VALVE	1"	BAG/CARTRIDGE FILTER	THREADED	PARKER MODEL VP50SS
V-225	UPSTREAM BAG FILTER 100A	40 05 23	1	BUTTERFLY VALVE	10"	BAG/CARTRIDGE FILTER	FLANGED	PRATT MKII
V-226	UPSTREAM BAG FILTER 100B	40 05 23	1	BUTTERFLY VALVE	10"	BAG/CARTRIDGE FILTER	FLANGED	PRATT MKII
V-227	DOWNSTREAM BAG FILTER 100B	40 05 23	1	BUTTERFLY VALVE	10"	BAG/CARTRIDGE FILTER	FLANGED	PRATT MKII
V-228	DOWNSTREAM BAG FILTER 100B	40 05 23	1	BUTTERFLY VALVE	10"	BAG/CARTRIDGE FILTER	FLANGED	PRATT MKII
V-229	BAG FILTER BYPASS	40 05 23	1	BUTTERFLY VALVE	14"	BAG/CARTRIDGE FILTER	FLANGED	PRATT MKII
V-230	BAG FILTER	40 05 23	1	BALL VALVE	1/2"	BAG/CARTRIDGE FILTER	THREADED	PARKER MODEL VP50SS
V-231	BAG FILTER	40 05 23	1	BALL VALVE	1/2"	BAG/CARTRIDGE FILTER	THREADED	PARKER MODEL VP50SS
V-232	BAG FILTER	40 05 23	1	BALL VALVE	1/2"	BAG/CARTRIDGE FILTER	THREADED	PARKER MODEL VP50SS
V-233	BAG FILTER	40 05 23	1	BALL VALVE	1/2"	BAG/CARTRIDGE FILTER	THREADED	PARKER MODEL VP50SS
V-234	BAG FILTER	40 05 23	1	BALL VALVE	1"	BAG/CARTRIDGE FILTER	THREADED	PARKER MODEL VP50SS
V-235	BAG FILTER	40 05 23	1	BALL VALVE	1"	BAG/CARTRIDGE FILTER	THREADED	PARKER MODEL VP50SS
V-236	BAG FILTER	40 05 23	1	BALL VALVE	1/2"	BAG/CARTRIDGE FILTER	THREADED	PARKER MODEL VP50SS
V-237	BAG FILTER	40 05 23	1	BALL VALVE	1/2"	BAG/CARTRIDGE FILTER	THREADED	PARKER MODEL VP50SS
V-238	BAG FILTER	40 05 23	1	BALL VALVE	1"	BAG/CARTRIDGE FILTER	THREADED	PARKER MODEL VP50SS
V-239	BAG FILTER	40 05 23	1	BALL VALVE	1"	BAG/CARTRIDGE FILTER	THREADED	PARKER MODEL VP50SS
V-240	UPSTREAM BAG FILTERS	40 05 23	1	BUTTERFLY VALVE	12"	BAG/CARTRIDGE FILTER	FLANGED	PRATT MKII
V-241	DOWNSTREAM OF BAG FILTERS	40 05 23	1	BUTTERFLY VALVE	14"	BAG/CARTRIDGE FILTER	FLANGED	PRATT MKII
V-242	DOWNSTREAM OF BAG FILTERS	40 05 23	1	BUTTERFLY VALVE	24"	EXT 24" BP-2 DISCHARGE LINE TO IX	FLANGED	PRATT MKII
V301-V309	NEW IX FOR COUNTY	40 05 23	9	VARIOUS PER MFR	1/2 TO 12"	VALVES IN IX VESSELS PER MFR		ALL SS VALVES
V-310	NEW IX VESSELS FOR COUNTY	40 05 23	1	BUTTERFLY VALVE	12"	3RD IX VESSEL FOR COUNTY	FLANGED	PRATT MKII
V-311	NEW IX VESSELS FOR COUNTY	40 05 23	1	BUTTERFLY VALVE	12"	3RD IX VESSEL FOR COUNTY	FLANGED	PRATT MKII

INSTRUMENTS EQUIPMENT SCHEDULE

VALVE NUMBER	LOCATION	SPEC	QUANTITY	TYPE	SIZE, INCH	SERVICE	CONNECTION	MAKE & MODEL
V-312	NEW IX VESSELS FOR COUNTY	40 05 23	1	BUTTERFLY VALVE	12"	3rd IX VESSEL FOR COUNTY	FLANGED	PRATT MKII
V-313	NEW IX VESSELS FOR COUNTY	40 05 23	1	BUTTERFLY VALVE	12"	3rd IX VESSEL FOR COUNTY	FLANGED	PRATT MKII
V-56	FLOW CONTROL STATION	40 05 23	1	FLOW CONTROL VALVE	12"	FLOW CONTROL STATION AT RANDALL	FLANGED	CLA VAL MODEL 131-CW
V-57	FLOW CONTROL STATION	40 05 23	1	RESILIENT GATE VALVE	12"	FLOW CONTROL STATION AT RANDALL	FLANGED	M AND H VALVE, STYLE 7561
V-58	FLOW CONTROL STATION	40 05 23	1	RESILIENT GATE VALVE	12"	FLOW CONTROL STATION AT RANDALL	FLANGED	M AND H VALVE, STYLE 7561
V-59	AYALA & MIRO X-SECTION	40 05 23	1	GATE VALVE	12"	RAW WATER	MJ X MJ	M AND H VALVE, STYLE 7561
V-60	AYALA & FITZGERALD X-SECTION	40 05 23	1	GATE VALVE	12"	RAW WATER	MJ X MJ	M AND H VALVE, STYLE 7561
V-61	NEW CONNECTION AT PINE & RADALL	40 05 23	1	GATE VALVE	8"	TREATED WATER	FLANGED	M AND H VALVE, STYLE 7561
V-62	CONNECTION WITH COUNTY LINE	40 05 23	1	BUTTERFLY VALVE	16"	TREATED WATER	FLANGED	PRATT MKII
V-63	CONNECTION WITH COUNTY LINE	40 05 23	1	BUTTERFLY VALVE	16"	TREATED WATER	FLANGED	PRATT MKII
V-64	COUNTY DISCHARGE LINE	40 05 23	1	CHECK VALVE	16"	TREATED WATER	WAFER	BRAY CHECK RITE MODEL 210, CL 350
V-65	NEW CONNECTION AT BASELINE	40 05 23	1	GATE VALVE	12"	TREATED WATER	FLANGED	M AND H VALVE, STYLE 7561
EW-1	EXTRACTION WELL -1	43 20 00	1	PUMP AND MOTOR	450 HP	RAW WATER	FLANGED	PEERLESS PUMP 14MD-7 STAGE
BP-2	BOOSTER PUMP -2	43 20 00	1	PUMP AND MOTOR	300 HP	RAW WATER	FLANGED	PEERLESS PUMP 14MD-5 STAGE
UV-1	ULTRA VIOLET UNIT -1	43 32 63	1	DISINFECTION UNIT		RAW WATER	FLANGED	SIEMENS M2600
LT-101	LEVEL TRANSDUCER		1	SUBMERSIBLE	700 FT	WATER LEVEL		MEAS KPSI 335
PI-101	EW-1 DISCHARGE LINE		1	WELD-O-LET/CORP STOP	2"	PRESSURE	THREADED	ASHCROFT 1010
PS-101	EW-1 DISCHARGE LINE		1	WELD-O-LET/CORP STOP		PRESSURE	NPT	MERCOID
HPS-101	EW-1 DISCHARGE LINE		1	WELD-O-LET/CORP STOP		PRESSURE SWITCH		MERCOID
PIT-101	EW-1 DISCHARGE LINE		1	WELD-O-LET/CORP STOP		PRESSURE TRANSMITTER		FOXBORO IGP10
FIT-101	EW-1 DISCHARGE LINE	40 91 15	1	MAGNETIC FLOW METER	10"	PRESSURE	FLANGED	SITRANS MAG 5100 W & 6000
PI-108	BP-2 DISCHARGE LINE		1	WELD-O-LET/CORP STOP	2"	PRESSURE	THREADED	ASHCROFT 1010
LPS-108	BOOSTER PUMP SUCTION		1	WELD-O-LET/CORP STOP	2"	PRESSURE SWITCH	NPT	MERCOID
PS-107	BOOSTER PUMP DISCHARGE		1	WELD-O-LET/CORP STOP	2"	PRESSURE SWITCH	NPT	MERCOID
HPS-107	BOOSTER PUMP DISCHARGE		1	WELD-O-LET/CORP STOP	2"	HIGH PRESSURE SWITCH	NPT	MERCOID
FIT-100	BOOSTER PUMP DISCHARGE		1	MAGNETIC FLOW METER	12"	RAW WATER TO TREATMENT SYSTEM	FLANGED	SITRANS MAG 5100 W
PIT-100	BP-2 DISCHARGE LINE		1	WELD-O-LET/CORP STOP	2"	PRESSURE TRANSMITTER		FOXBORO IGP10
PI-100	BP-2 DISCHARGE LINE		1	WELD-O-LET/CORP STOP	2"	PRESSURE	THREADED	ASHCROFT 1010
PI-200	BAG FILTERS		1	WELD-O-LET/CORP STOP	2"	PRESSURE	THREADED	ASHCROFT 1010
PI-201	BAG FILTERS FOR COUNTY		1	WELD-O-LET/CORP STOP	2"	PRESSURE	THREADED	ASHCROFT 1010
PI-202	BAG FILTER DOWNSTREAM		1	WELD-O-LET/CORP STOP	2"	PRESSURE	THREADED	ASHCROFT 1010
PI-101A	BAG FILTER D/S OF COUNTY		1	WELD-O-LET/CORP STOP	2"	PRESSURE	THREADED	ASHCROFT 1010
PDIT-101	BAG FILTERS FOR COUNTY		1	WELD-O-LET/CORP STOP	1/4"	PRESSURE	NPT	ASHCROFT GC52
PDIT-201	BAG FILTER		1	WELD-O-LET/CORP STOP	1/4"	PRESSURE	NPT	ASHCROFT GC52
PDIT-301	NEW IX VESSEL FOR COUNTY		1	WELD-O-LET/CORP STOP	1/4"	PRESSURE	NPT	ASHCROFT GC52
FIT-503	FLOW CONTROL AT RANDALL	40 91 15	1	MAGNETIC FLOW METER	12"	WATER FLOW	FLANGED	SITRANS MAG 5100 W & 6000
FIT-301A	IX VESSEL - 301A	40 91 15	1	MAGNETIC FLOW METER	12"	FLOW	FLANGED	SITRANS MAG 5100 W & 6000
FIT-301B	IX VESSEL - 301B	40 91 15	1	MAGNETIC FLOW METER	12"	FLOW	FLANGED	SITRANS MAG 5100 W & 6000
FIT-301C	IX VESSEL - 301C	40 91 15	1	MAGNETIC FLOW METER	12"	FLOW	FLANGED	SITRANS MAG 5100 W & 6000
PDIT-301A	IX VESSEL - 301A		1	WELD-O-LET/CORP STOP	1/4"	PRESSURE	NPT	ASHCROFT GC52
PDIT-301B	IX VESSEL - 301B		1	WELD-O-LET/CORP STOP	1/4"	PRESSURE	NPT	ASHCROFT GC52
PDIT-301C	IX VESSEL - 301C		1	WELD-O-LET/CORP STOP	1/4"	PRESSURE	NPT	ASHCROFT GC52
PI-301A-1	IX VESSEL - 301A		1	WELD-O-LET/CORP STOP	2"	PRESSURE	THREADED	ASHCROFT 1010
PI-301A-2	IX VESSEL - 301A		1	WELD-O-LET/CORP STOP	2"	PRESSURE	THREADED	ASHCROFT 1010
PI-301B-1	IX VESSEL - 301B		1	WELD-O-LET/CORP STOP	2"	PRESSURE	THREADED	ASHCROFT 1010
PI-301B-2	IX VESSEL - 301B		1	WELD-O-LET/CORP STOP	2"	PRESSURE	THREADED	ASHCROFT 1010
PI-301C-1	IX VESSEL - 301C		1	WELD-O-LET/CORP STOP	2"	PRESSURE	THREADED	ASHCROFT 1010
PI-301C-2	IX VESSEL - 301C		1	WELD-O-LET/CORP STOP	2"	PRESSURE	THREADED	ASHCROFT 1010
PRV-301A	IX VESSEL - 301A		1		4"	PRESSURE RELIEF VALVE	FLANGED	CLA-VAL
PRV-301B	IX VESSEL - 301B		1		4"	PRESSURE RELIEF VALVE	FLANGED	CLA-VAL
PRV-301C	IX VESSEL - 301C		1		4"	PRESSURE RELIEF VALVE	FLANGED	CLA-VAL
PDIT-401A	LGAC - 401A		1	WELD-O-LET/CORP STOP	1/4"	PRESSURE	NPT	ASHCROFT GC52
PDIT-401B	LGAC - 401B		1	WELD-O-LET/CORP STOP	1/4"	PRESSURE	NPT	ASHCROFT GC52
PDIT-402A	LGAC - 402A		1	WELD-O-LET/CORP STOP	1/4"	PRESSURE	NPT	ASHCROFT GC52
PDIT-402B	LGAC - 402B		1	WELD-O-LET/CORP STOP	1/4"	PRESSURE	NPT	ASHCROFT GC52
FIT-401A	LGAC - 401A	40 91 15	1	MAGNETIC FLOW METER	10"	FLOW	FLANGED	SITRANS MAG 5100 W & 6000
FIT-401B	LGAC - 401B	40 91 15	1	MAGNETIC FLOW METER	10"	FLOW	FLANGED	SITRANS MAG 5100 W & 6000
FIT-402A	LGAC - 402A	40 91 15	1	MAGNETIC FLOW METER	10"	FLOW	FLANGED	SITRANS MAG 5100 W & 6000
FIT-402B	LGAC - 402B	40 91 15	1	MAGNETIC FLOW METER	10"	FLOW	FLANGED	SITRANS MAG 5100 W & 6000
PI-401A	LGAC - 401A		1	WELD-O-LET/CORP STOP	2"	PRESSURE	THREADED	ASHCROFT 1010
PI-401B	LGAC - 401B		1	WELD-O-LET/CORP STOP	2"	PRESSURE	THREADED	ASHCROFT 1010
PI - 402A	LGAC - 402A		1	WELD-O-LET/CORP STOP	2"	PRESSURE	THREADED	ASHCROFT 1010
PI - 402B	LGAC - 402B		1	WELD-O-LET/CORP STOP	2"	PRESSURE	THREADED	ASHCROFT 1010

REV	DATE	REVISION	APPR'D	REV BY

REGISTERED PROFESSIONAL ENGINEER CHRISTOPHER SHEM HAWES Exp. 6/30/2014 No. 69578 CIVIL STATE OF CALIFORNIA 06/16/14

PLANS PREPARED BY:

General Civil, Transportation, Municipal, Water and Wastewater Engineering, Planning, Construction Management, and Surveying

118 West Lime Avenue
Monrovia, Ca. 91016
Phone: (626) 357-0588
Fax: (626) 303-7957

CIVILTEC engineering inc.
Monrovia • Prescott • Phoenix

ERM

GROUNDWATER EXTRACTION AND TREATMENT SYSTEM COMBINED REMEDY SOURCE AREA OPERABLE UNIT, ROCKETS, FIREWORKS, AND FLARES SUPERFUND SITE

REV

SCALE: AS SHOWN	DESIGNED BY: JM/BS/BD/CD	DRAWN BY: JM/BS/CD	DRAWING NUMBER:
DATE: SCALE	CHECKED: BD/CSH	APPROVED:	JOB NUMBER: 2013175.00

SHEET 58

MECHANICAL SCHEDULE
VALVE AND INSTRUMENT LIST

DISCIPLINE NO. PID-7

ENVIRONMENTAL RESOURCES MANAGEMENT

X:\2013\2013175.00-ERM-RIALTO TREATMENT PLANT EXPANSION\DWG\TREATMENT PLANT\2013175.00 RIALTO-SHT58-PID-7 SCH.DWG [06-02-14 3:13:4

VALVE AND EQUIPMENT SCHEDULE

VALVE NUMBER	LOCATION	SPEC	QUANTITY	TYPE	SIZE, INCH	SERVICE	CONNECTION	MAKE & MODEL
PRV-401	LGAC – 401A AND 401B		1		3"	PRESSURE RELIEF VALVE	FLANGED	CLA-VAL
PRV-401	LGAC – 402A AND 402B		1		3"	PRESSURE RELIEF VALVE	FLANGED	CLA-VAL
FIT-501	BACKWASH SUPPLY	40 91 15	1	MAGNETIC FLOW METER	8"	FLOW	FLANGED	SITRANS MAG 5100 W & 6000
PI-501	DISINFECTION UNIT		1	WELD-O-LET	2"	PRESSURE	THREADED	ASHCROFT 1010
LE-601	DISINFECTION UNIT		1			SOLUTION LEVEL IN TANK		ECHOMAX -XPS 10
LIC-601	DISINFECTION UNIT		1	ULTRASONIC LEVEL CONTROLLER		SOLUTION LEVEL IN TANK		HYDRORANGER 200
FIT-502	DISINFECTION UNIT	40 91 15	1	MAGNETIC FLOW METER	1.5"	FLOW	FLANGED	SITRANS MAG 5100 W & 6000
PI-513	DISINFECTION UNIT		1	WELD-O-LET/CORP STOP	2"	PRESSURE	THREADED	ASHCROFT 1010
PIT-501	DISINFECTION UNIT			WELD-O-LET/CORP STOP		PRESSURE TRANSMITTER		FOXBORO IGP10
AIT-503	DISINFECTION UNIT			CHLORINE ANALYZER		TREATED WATER	WELD-O-LET	HACH CL17
MP-501	DISINFECTION UNIT			METERING PUMP	2 HP	CHLORINE SOLUTION		GRUNDFOS CRIE 5-8
MP-502	DISINFECTION UNIT			METERING PUMP	2 HP	CHLORINE SOLUTION		GRUNDFOS CRIE 5-8
FE/FIT-503	FLOW CONTROL STATION	40 91 15	1	MAGNETIC FLOW METER TRANSMITTER	12"	WATER TO COLTON	FLANGED	SITRANS MAG 5100 W & 6000
V-A1	T-301A EFFLUENT	40 05 23	1	BUTTERFLY VALVE	12"	IX TREATED WATER	FLANGED	PRATT MKII
V-A1A	T-301A EFFLUENT	40 05 23	1	BUTTERFLY VALVE	12"	IX TREATED WATER	FLANGED	PRATT MKII
V-A2	T-301A BACKWASH SUPPLY	40 05 23	1	BUTTERFLY VALVE	12"	BACKWASH FOR IX	FLANGED	PRATT MKII
V-A2A	T-301A BACKWASH SUPPLY	40 05 23	1	BUTTERFLY VALVE	12"	BACKWASH FOR IX	FLANGED	PRATT MKII
V-A3	T-301A BACKWASH DISCHARGE	40 05 23	1	BUTTERFLY VALVE	12"	BACKWASH DISCHARGE	FLANGED	PRATT MKII
V-A4	T-301A EFFLUENT	40 05 23	1	BALL	1"	PRESSURE DIFFERENTIAL	THREADED	PARKER MODEL VP50SS
V-A5	T-301A INFLUENT	40 05 23	1	BALL	1"	PRESSURE DIFFERENTIAL	THREADED	PARKER MODEL VP50SS
V-A6	T-301A EFFLUENT SAMPLE POINT	40 05 23	1	BALL	2"	IX EFFLUENT SAMPLE LINE	THREADED	PARKER MODEL VP50SS
V-A7	T-301A EFFLUENT PRESSURE INDICATOR	40 05 23	1	BALL	1/2"	EFFLUENT PRESSURE INDICATOR	THREADED	PARKER MODEL VP50SS
V-A8	T-301A EFFLUENT	40 05 23	1	BALL	2"	IX TREATED WATER LINE	THREADED	PARKER MODEL VP50SS
V-A9	T-301A DRAIN LINE	40 05 23	1	GATE	4"	UNDERDRAIN	FLANGED	M AND H VALVE, STYLE 7561
V-A10	T-301A DRAIN LINE	40 05 23	1	BALL	1/2"	UNDERDRAIN	THREADED	PARKER MODEL VP50SS
V-A11	T-301A VESSEL SAMPLE PORT	40 05 23	1	BALL	1"	IX VENT LINE	THREADED	PARKER MODEL VP50SS
V-A12	T-301A FILL LINE	40 05 23	1	BALL	2"	IX VESSEL FILL LINE	THREADED	PARKER MODEL VP50SS
V-A13	T-301A FILL LINE	40 05 23	1	BALL	4"	IX VESSEL FILL LINE	FLANGED	
V-A14	T-301A FILL LINE	40 05 23	1	BALL	2"	IX VESSEL FILL LINE	THREADED	PARKER MODEL VP50SS
V-A15	T-301A INFLUENT PRESSURE INDICATOR	40 05 23	1	BALL	1/2"	IX INFLUENT PRESSURE INDICATOR	THREADED	PARKER MODEL VP50SS
V-A16	T-301A INFLUENT SAMPLE POINT	40 05 23	1	BALL	2"	IX EFFLUENT SAMPLE PORT	THREADED	PARKER MODEL VP50SS
V-A17	T-301A INFLUENT	40 05 23	1	BUTTERFLY VALVE	12"	IX INFLUENT LINE (FROM MANIFOLD)	FLANGED	PRATT MKII
V-A18	T-301A INFLUENT	40 05 23	1	BUTTERFLY VALVE	12"	IX INFLUENT LINE (FROM IX)	FLANGED	PRATT MKII
V-A19	IX T-301A	40 05 23	1	SS BALL	1"	AIR RELEASE	THREADED	VPN 5000 SS
V-A20	IX T-301A	40 05 23	1	AIR RELEASE	1"	AIR RELEASE	THREADED	APCO SERIES 140C
V-A21	IX T-301A	40 05 23	1	SS BALL	1"	AIR RELEASE	THREADED	COMBINATION AIR VALVE
RT-A1	IX T-301A	40 05 23	1	SS RESIN TRAP	12"	EFFLUENT LINE	FLANGED	VPN 5000 SS
V-B1	T-301B EFFLUENT	40 05 23	1	BUTTERFLY VALVE	12"	IX TREATED WATER	FLANGED	PRATT MKII
V-B1A	T-301B EFFLUENT	40 05 23	1	BUTTERFLY VALVE	12"	IX TREATED WATER	FLANGED	PRATT MKII
V-B2	T-301B BACKWASH SUPPLY	40 05 23	1	BUTTERFLY VALVE	12"	BACKWASH FOR IX	FLANGED	PRATT MKII
V-B2A	T-301B BACKWASH SUPPLY	40 05 23	1	BUTTERFLY VALVE	12"	BACKWASH FOR IX	FLANGED	PRATT MKII
V-B3	T-301B BACKWASH DISCHARGE	40 05 23	1	BUTTERFLY VALVE	12"	BACKWASH DISCHARGE	FLANGED	PRATT MKII
V-B4	T-301B EFFLUENT	40 05 23	1	BALL	1"	PRESSURE DIFFERENTIAL	THREADED	PARKER MODEL VP50SS
V-B5	T-301B INFLUENT	40 05 23	1	BALL	1"	PRESSURE DIFFERENTIAL	THREADED	PARKER MODEL VP50SS
V-B6	T-301B EFFLUENT SAMPLE POINT	40 05 23	1	BALL	2"	IX EFFLUENT SAMPLE LINE	THREADED	PARKER MODEL VP50SS
V-B7	T-301B EFFLUENT PRESSURE INDICATOR	40 05 23	1	BALL	1/2"	EFFLUENT PRESSURE INDICATOR	THREADED	PARKER MODEL VP50SS
V-B8	T-301B EFFLUENT	40 05 23	1	BALL	2"	IX TREATED WATER LINE	THREADED	PARKER MODEL VP50SS
V-B9	T-301B DRAIN LINE	40 05 23	1	GATE	4"	UNDERDRAIN	FLANGED	M AND H VALVE, STYLE 7561
V-B10	T-301B DRAIN LINE	40 05 23	1	BALL	1/2"	UNDERDRAIN	THREADED	PARKER MODEL VP50SS
V-B11	T-301B VESSEL SAMPLE PORT	40 05 23	1	BALL	1"	IX VENT LINE	THREADED	PARKER MODEL VP50SS
V-B12	T-301B FILL LINE	40 05 23	1	BALL	2"	IX VESSEL FILL LINE	THREADED	PARKER MODEL VP50SS
V-B13	T-301B FILL LINE	40 05 23	1	BALL	4"	IX VESSEL FILL LINE	FLANGED	
V-B14	T-301B FILL LINE	40 05 23	1	BALL	2"	IX VESSEL FILL LINE	THREADED	PARKER MODEL VP50SS
V-B15	T-301B INFLUENT PRESSURE INDICATOR	40 05 23	1	BALL	1/2"	IX INFLUENT PRESSURE INDICATOR	THREADED	PARKER MODEL VP50SS
V-B16	T-301B INFLUENT SAMPLE POINT	40 05 23	1	BALL	2"	IX EFFLUENT SAMPLE PORT	THREADED	PARKER MODEL VP50SS
V-B17	T-301B INFLOW	40 05 23	1	BUTTERFLY VALVE	12"	IX INFLUENT LINE (FROM MANIFOLD)	FLANGED	PRATT MKII
V-B18	T-301B INFLOW	40 05 23	1	BUTTERFLY VALVE	12"	IX INFLUENT LINE (FROM IX)	FLANGED	PRATT MKII
V-B19	IX T-301B	40 05 23	1	SS BALL	1"	AIR RELEASE	THREADED	VPN 5000 SS
V-B20	IX T-301B	40 05 23	1	AIR RELEASE	1"	AIR RELEASE	THREADED	APCO SERIES 140C
V-B21	IX T-301B	40 05 23	1	SS BALL	1"	AIR RELEASE	THREADED	COMBINATION AIR VALVE
RT-B1	IX T-301B	40 05 23	1	SS RESIN TRAP	12"	EFFLUENT LINE	FLANGED	VPN 5000 SS
V-C1	T-301C EFFLUENT	40 05 23	1	BUTTERFLY VALVE	12"	IX TREATED WATER	FLANGED	PRATT MKII
V-C1A	T-301C EFFLUENT	40 05 23	1	BUTTERFLY VALVE	12"	IX TREATED WATER	FLANGED	PRATT MKII
V-C2	T-301C BACKWASH SUPPLY	40 05 23	1	BUTTERFLY VALVE	12"	BACKWASH FOR IX	FLANGED	PRATT MKII
V-C2A	T-301C BACKWASH SUPPLY	40 05 23	1	BUTTERFLY VALVE	12"	BACKWASH FOR IX	FLANGED	PRATT MKII
V-C3	T-301C BACKWASH DISCHARGE	40 05 23	1	BUTTERFLY VALVE	12"	BACKWASH DISCHARGE	FLANGED	PRATT MKII
V-C4	T-301C EFFLUENT	40 05 23	1	BALL	1"	PRESSURE DIFFERENTIAL	THREADED	PARKER MODEL VP50SS
V-C5	T-301C INFLUENT	40 05 23	1	BALL	1"	PRESSURE DIFFERENTIAL	THREADED	PARKER MODEL VP50SS
V-C6	T-301C EFFLUENT SAMPLE POINT	40 05 23	1	BALL	2"	IX EFFLUENT SAMPLE LINE	THREADED	PARKER MODEL VP50SS
V-C7	T-301C EFFLUENT PRESSURE INDICATOR	40 05 23	1	BALL	1/2"	EFFLUENT PRESSURE INDICATOR	THREADED	PARKER MODEL VP50SS
V-C8	T-301C EFFLUENT	40 05 23	1	BALL	2"	IX TREATED WATER LINE	THREADED	PARKER MODEL VP50SS
V-C9	T-301C DRAIN LINE	40 05 23	1	GATE	4"	UNDERDRAIN	FLANGED	M AND H VALVE, STYLE 7561
V-C10	T-301C DRAIN LINE	40 05 23	1	BALL	1/2"	UNDERDRAIN	THREADED	PARKER MODEL VP50SS
V-C11	T-301C VESSEL SAMPLE PORT	40 05 23	1	BALL	1"	IX VENT LINE	THREADED	PARKER MODEL VP50SS
V-C12	T-301C FILL LINE	40 05 23	1	BALL	2"	IX VESSEL FILL LINE	THREADED	PARKER MODEL VP50SS
V-C13	T-301C FILL LINE	40 05 23	1	BALL	4"	IX VESSEL FILL LINE	FLANGED	
V-C14	T-301C FILL LINE	40 05 23	1	BALL	2"	IX VESSEL FILL LINE	THREADED	PARKER MODEL VP50SS
V-C15	T-301C INFLUENT PRESSURE INDICATOR	40 05 23	1	BALL	1/2"	IX INFLUENT PRESSURE INDICATOR	THREADED	PARKER MODEL VP50SS
V-C16	T-301C INFLUENT SAMPLE POINT	40 05 23	1	BALL	2"	IX EFFLUENT SAMPLE PORT	THREADED	PARKER MODEL VP50SS
V-C17	T-301C INFLOW	40 05 23	1	BUTTERFLY VALVE	12"	IX INFLUENT LINE (FROM MANIFOLD)	FLANGED	PRATT MKII

VALVE AND EQUIPMENT SCHEDULE

VALVE NUMBER	LOCATION	SPEC	QUANTITY	TYPE	SIZE, INCH	SERVICE	CONNECTION	MAKE & MODEL
V-C18	IX T-301C	40 05 23	1	SS BALL	1"	AIR RELEASE	THREADED	VRN 5000 SS
V-C19	IX T-301C	40 05 23	1	AIR RELEASE	1"	AIR RELEASE	THREADED	APCO SERIES 140C
V-C20	IX T-301C	40 05 23	1	SS BALL	1"	AIR RELEASE	THREADED	COMBINATION AIR VALVE
RT-C1	IX T-301C	40 05 23	1	SS RESIN TRAP	12"	EFFLUENT LINE	FLANGED	VRN 5000 SS
V-4A	LGAC VESSELS – UNTREATED WATER		2	BUTTERFLY VALVE	12"	INFLUENT ISOLATION	FLANGED	
V-4B	LGAC VESSELS – UNTREATED WATER		2	BUTTERFLY VALVE	12"	INFLUENT ISOLATION	FLANGED	
V-4C	LGAC LEAD VESSEL – UNTREATED WATER		2	BUTTERFLY VALVE	12"	INFLUENT ISOLATION TO THE LEAD VESSEL	FLANGED	
V-4D	LGAC LAG VESSEL – UNTREATED WATER		2	BUTTERFLY VALVE	12"	INFLUENT ISOLATION TO THE LAG VESSEL	FLANGED	
V-4E	LGAC VESSELS – TREATED WATER		2	BUTTERFLY VALVE	12"	EFFLUENT ISOLATION	FLANGED	
V-4F	LGAC VESSELS – TREATED WATER		2	BUTTERFLY VALVE	12"	EFFLUENT ISOLATION	FLANGED	
V-4G	LGAC VESSELS – BACKWASH SUPPLY		2	BUTTERFLY VALVE	8"	BACKWASH ISOLATION	FLANGED	
V-4H	LGAC VESSELS – BACKWASH SUPPLY		2	BUTTERFLY VALVE	8"	BACKWASH ISOLATION	FLANGED	
V-4I	LGAC VESSELS – BACKWASH DISCHARGE		2	BUTTERFLY VALVE	8"	BACKWASH ISOLATION	FLANGED	
V-4J	LGAC VESSELS – BACKWASH DISCHARGE		2	BUTTERFLY VALVE	1/2"	ISOLATION	FLANGED	
V-4K	LGAC LAG VESSEL – PDIT		2	BALL	1/2"	ISOLATION	THREADED	
V-4L	LGAC LEAD VESSEL – PDIT		2	BALL	1/2"	ISOLATION	THREADED	
V-4M	LGAC VESSELS – (PI) UNTREATED WATER		2	BALL	1/2"	ISOLATION	THREADED	
V-4N	LGAC VESSELS – (PI) UNTREATED WATER		2	BALL	1/2"	ISOLATION	THREADED	
V-4O	LGAC VESSELS – (PDIT) UNTREATED WATER		2	BALL	1/2"	ISOLATION	THREADED	
V-4P	LGAC VESSELS – (PDIT) UNTREATED WATER		2	BALL	1/2"	ISOLATION	THREADED	
V-4Q	LGAC LEAD VESSEL – (PI) BACKWASH SUPPLY		2	BALL	1/2"	ISOLATION	THREADED	
V-4R	LGAC LAG VESSEL – (PI) BACKWASH SUPPLY		2	BALL	1/2"	ISOLATION	THREADED	
V-4S	LGAC VESSELS – SAMPLER		4	GLOBE	4"	ISOLATION	THREADED	
V-4T	LGAC VESSELS – SAMPLER		4	BALL	1/2"	ISOLATION	THREADED	
V-4U	LGAC VESSELS		4	BALL	1/2"	ISOLATION	THREADED	
V-4V	LGAC VESSELS – SAMPLER		4	GLOBE	1"	ISOLATION	THREADED	
V-4W	LGAC VESSELS		4	BALL	1/2"	ISOLATION	THREADED	
V-4X	LGAC VESSELS		4	BALL	1/2"	ISOLATION	THREADED	
V-4Y	LGAC VESSELS		4	BALL	1"	ISOLATION	THREADED	
V-4Z	LGAC VESSELS		4	BALL	1/2"	ISOLATION	THREADED	
V-4AA	LGAC VESSEL – BACKWASH DISCHARGE		1	BUTTERFLY VALVE	4"	BACKWASH ISOLATION	FLANGED	
V-4AB	LGAC VESSEL – BACKWASH DISCHARGE		1	BUTTERFLY VALVE	4"	BACKWASH ISOLATION	FLANGED	
V-4AC	LGAC VESSEL – BACKWASH DISCHARGE		1	BUTTERFLY VALVE	4"	BACKWASH ISOLATION	FLANGED	

SPECIAL NOTE TO CONTRACTOR:

1. CONTRACTOR SHALL PROVIDE ALL EQUIPMENTS, VALVES, AND INSTRUMENTS. THOSE ARE SHOWN IN CONSTRUCTION DOCUMENTS WHETHER LISTED IN DWG PID-7/PID-8 OR NOT.

REV	DATE	REVISION	APPR'D	REV BY

REGISTERED PROFESSIONAL ENGINEER CHRISTOPHER SHEM HAWES Exp. 6/30/2014 No. 69578 CIVIL STATE OF CALIFORNIA 6/18/14

PLANS PREPARED BY:

General Civil, Transportation, Municipal, Water and Wastewater Engineering, Planning, Construction Management, and Surveying

118 West Lime Avenue
Monrovia, Ca. 91016
Phone: (626) 357-0588
Fax: (626) 303-7957

CIVILTEC engineering inc.
Monrovia • Prescott • Phoenix

ERM

GROUNDWATER EXTRACTION AND TREATMENT SYSTEM COMBINED REMEDY SOURCE AREA OPERABLE UNIT, ROCKETS, FIREWORKS, AND FLARES SUPERFUND SITE

SCALE	AS SHOWN	DESIGNED BY	JM/BS/BD/CD	DRAWN BY	JM/BS/CD	DRAWING NUMBER	
DATE	SCALE	CHECKED	BD/CSH	APPROVED		JOB NUMBER	20131175.00

REV

SHEET 59

DISCIPLINE NO. PID-8

MECHANICAL SCHEDULE
IX AND LGAC VALVE LIST

ENVIRONMENTAL RESOURCES MANAGEMENT

X:\20131\20131175.00-ERM-RIALTO TREATMENT PLANT EXPANSION\DWG\TREATMENT PLANT\20131175.00 RIALTO-SHT59-PID-8 SCH.DWG (08-02-14 3:14:3

GENERAL NOTES

1. ALL WORK SHALL BE DONE IN STRICT ACCORD WITH THE 2010 CALIFORNIA ELECTRICAL CODE (CEC) AND ALL APPLICABLE STATE, COUNTY AND LOCAL CODES APPLYING TO THE PROPOSED CONSTRUCTION.
2. NOTHING ON THE DESIGN DRAWINGS AND SPECIFICATION SHALL BE INTERPRETED AS AUTHORITY TO VIOLATE ANY CODES OR REGULATIONS.
3. THE CONTRACTOR SHALL OBTAIN AND PAY FOR ALL PERMITS AND INSPECTION REQUIREMENTS AS REQUIRED TO PERFORM THE WORK.
4. THE CONTRACTOR SHALL FIELD VERIFY EXISTING SITE AND BUILDING CONDITIONS. SUBMITTAL OF BID INDICATES THAT CONTRACTOR IS AWARE OF ALL JOB SITE CONDITIONS AND WORK TO BE PERFORMED UNDER THIS CONTRACT AND BUILDING PERMIT.
5. ELECTRICAL EQUIPMENT AND MATERIAL TO BE LISTED, LABELED, AND INSTALLED AS PER UNDERWRITERS LABORATORIES, OR EQUAL. ALL MATERIAL AND EQUIPMENT SHALL BE DELIVERED TO THE SITE NEW, BEARING APPROVAL BY U.L., NEMA OR OTHER APPROPRIATE AGENCY.
6. THE CONTRACTOR SHALL PROVIDE A COMPLETE AND FUNCTIONING ELECTRICAL SYSTEM MEETING THE CRITERIA HEREIN AND THE INTENT OF THESE PLANS AND SPECIFICATIONS.
7. ELECTRICAL LAYOUT DRAWINGS ARE DIAGRAMMATIC. INSTALL THE ELECTRICAL SYSTEMS WITHOUT INTERFERING WITH DUCTS, PIPES, STRUCTURAL STEEL OR OTHER SYSTEMS.
8. REFER TO MECHANICAL DRAWINGS FOR EXACT EQUIPMENT AND CONTROL LOCATIONS AND FOR CONTROL SCHEMATICS. ALL LOCATIONS TO BE VERIFIED BEFORE ROUGH–IN.
9. ALL ELECTRICAL DEVICES, EQUIPMENT, CONDUITS, ETC. LOCATED OUTSIDE THE BUILDING ENVELOPE SHALL BE SUITABLE FOR THE USE INTENDED.
10. ALL CONDUCTORS SHALL BE COPPER AND RATED 600 VOLTS. SIZES #10 AWG AND LARGER TO BESTRANDED AND #12 AND SMALLER SHALL BE SOLID. USE TYPE THHN, THWN, THW. USE TYPE SO FOR CORD CONNECTION TO EQUIPMENT, 600V HEAT–RESISTANT RUBBER INSULATED WITH NEOPRENE JACKET AND EXTRA FLEXIBLE, STRANDED WIRE.
11. ALL WIRING SHALL BE IN METALLIC CONDUIT UNLESS OTHERWISE SHOWN ON THE PLANS. RIGID SCH 40 PVC SHALL BE USED IN OR UNDER CONCRETE SLABS ON GRADE. WHERE EXPOSED TO WEATHER, AND TO MECHANICAL DAMAGE, USE EMT. FLEXIBLE CONDUIT SHALL BE USED TO THE MAXIMUM EXTENT AS ALLOWED BY CODE, AND CONNECTIONS TO LIGHTING FIXTURES AND OTHER VIBRATING EQUIPMENT. USE NEOPRENE JACKETED FLEXIBLE CONDUIT AND FITTINGS WHERE EXPOSED TO WEATHER. MC CABLE MAY NOT BE USED.
12. ALL MOTORS, A/C UNITS, COMPRESSORS AND METAL HOUSINGS SHALL BE GROUNDED WITH GREEN GROUND WIRES SIZED AND INSTALLED ACCORDING TO CODES. ALL FEEDERS RUN IN NONMETALLIC CONDUITS SHALL HAVE GROUND CONDUCTOR RUN WITH CURRENT CAPACITY CONDUCTOR SIZED IN ACCORD WITH APPLICABLE CODES. THE CONTRACTOR SHALL MAINTAIN UNIFORMITY AND CONTINUITY OF THE GROUNDING SYSTEM. ALL CONDUITS MUST HAVE AN EQUIPMENT GROUND INSTALLED IN THE CONDUIT. THE CONDUIT CAN NOT BE USED FOR AS THE GROUND PATH.
13. DUPLEX RECEPTACLES TO BE RATED AT 15 AMPS, NEMA CONFIGURATION 5–15 R, 3 WIRE GND TYPE. COLOR SHALL BE BUILDING STANDARD.
14. SWITCHES SHALL BE RATED 20 AMPS – 120/277 VOLTS UNLESS OTHERWISE NOTED. COLOR SHALL BE BUILDING STANDARD.
15. ALL CIRCUIT BREAKERS USED FOR SWITCHING FLUORESCENT LIGHT FIXTURES SHALL BE APPROVED FOR THAT PURPOSE AND MARKED "SWD".
16. ALL CONDUIT PENETRATIONS THROUGH FIRE RATED FLOOR SLABS AND WALLS SHALL BE SEALED AGAINST THE SPREAD OF FIRE OR SMOKE WITH APPROVED CABLE & CONDUIT FIRESTOPS OR FIRE RESISTANT SEALANT TO GIVE THE EQUIVALENT FIRE RATING.
17. ALL WIRING DESIGN IS BASED ON 75 DEGREES C CONDITIONS.
18. PROVIDE SEPARATE GROUND WIRE IN ALL FLEX, MC CABLE, AND NONMETALLIC CONDUITS.
19. ALL EQUIPMENT TO BE SIEMENS OR EQUAL AND ALL WILL BE THE SAME MANUFACTURER. ALL PANELS SHALL BE PANEL BOARD TYPE WITH BOLT–ON CIRCUIT BREAKERS.
20. RELEVANT SUBCONTRACTOR SHALL BECOME FAMILIAR WITH ALL ELEMENTS OF THE CONSTRUCTION DRAWINGS. ANY ERRORS, OMISSIONS OR DISCREPANCIES SHALL BE BROUGHT TO THE ATTENTION OF OWNER REPRESENTATIVE UPON BID SUBMISSION AND PRIOR TO ANY WORK. IF CONTRACTOR FAILS TO DO THIS THEN CONTRACTOR ASSUMES FULL RESPONSIBILITY FOR SUCH ERRORS, OMISSIONS AND DISCREPANCIES.
21. CONDUIT ABOVE CEILING MUST BE A MINIMUM OF 12" ABOVE THE CEILING GRID.
22. MOUNT LIGHT SENSORS OR SWITCHES WITHIN 12" OF EDGE OF DOOR SWING & MAINTAIN CONSISTENT DIMENSION THROUGHOUT.
23. "OR EQUAL" MEANS EQUIVALENT OR SUPERIOR IN PERFORMANCE, MATERIALS, WORKMANSHIP AND APPEARANCE TO THOSE SPECIFIED.
24. ELECTRICAL CONTRACTOR SHALL BE RESPONSIBLE FOR THE COORDINATION OF ALL LIGHTING EQUIPMENT AND CONTROL DEVICES WITH CEILING AND WALL TYPES, PRIOR TO ORDERING LIGHTING EQUIPMENT.
25. COORDINATE EXACT LOCATIONS AND MOUNTING REQUIREMENTS OF ALL EQUIPMENT OTHER TRADES. REFER TO ALL OTHER CONSTRUCTION DOCUMENTS AS REQUIRED FOR COORDINATION WITH ALL OTHER DISCIPLINES.
26. CONTRACTOR IS TO DEMONSTRATE THAT ALL EQUIPMENT AND SYSTEMS ARE INSTALLED AND FUNCTIONING PROPERLY BY PERFORMING ALL NECESSARY FIELD TESTING PRIOR TO THE FINAL ACCEPTANCE OF WORK.
27. CONTRACTOR SHALL MAINTAIN ACCURATE AS–BUILT DRAWINGS DURING CONSTRUCTION AND SHALL SUBMIT THEM TO GENERAL CONTRACTOR UPON COMPLETION OF THE PROJECT.
28. IN ADDITION TO EQUIPMENT WARRANTIES, THE CONTRACTOR SHALL FURNISH A WRITTEN WARRANTY AGAINST DEFECTS IN MATERIAL AND WORKMANSHIP FOR ONE YEAR AFTER OWNER'S ACCEPTANCE OF THE PROJECT.
29. THESE DRAWINGS ARE DIAGRAMMATIC AND INDICATE THE GENERAL ARRANGEMENT OF SYSTEMS EQUIPMENT AND COMPONENTS AND THEIR RELATED CONNECTIONS. DEVICE AND PATHWAY PLACEMENT IS ONLY REPRESENTATIVE OF A GENERAL LOCATION UNLESS INDICATED OTHERWISE BY DIMENSIONS. SYMBOLS ARE USED EXTENSIVELY WHICH MAY NOT EXACTLY REPRESENT ACTUAL SIZES. THE DRAWINGS DO NOT SHOW ALL OFFSETS, TRANSITIONS, AND DEVICES NECESSARY FOR A COMPLETE AND FUNCTIONAL SYSTEM AS REQUIRED BY THE CONTRACT DOCUMENTS. IT IS THE RESPONSIBILITY OF THE CONTRACTOR TO PLACE THESE DEVICES AND PATHWAY SUCH THAT THEY OFFER FULL FUNCTIONALITY WITHOUT HINDRANCE FROM CASEWORK, FURNITURE, WINDOWS AND DOORS, HVAC, PLUMBING, ELECTRICAL, AND OTHER BUILDING SYSTEMS.
30. ELECTRICAL EQUIPMENT SHALL BE LISTED BY A CITY RECOGNIZED ELECTRICAL TESTING LABORATORY OR APPROVED BY THE DEPARTMENT.
31. NO PIPING, DUCTS OR EQUIPMENT FOREIGN TO ELECTRICAL EQUIPMENT SHALL BE PERMITTED TO BE LOCATED WITHIN THE DEDICATED SPACE ABOVE THE ELECTRICAL EQUIPMENT.
32. FUSES SHALL BE PROVIDED WITH REJECTION TYPE FUSE HOLDERS.
33. THE SEISMIC ANCHORAGE FOR ELECTRICAL EQUIPMENT SHALL BE PER ASCE 7.05 CHAPTER 13.

SYMBOLS

- (R) JUNCTION BOX WITH POWER PACK RELAY
- (PC) PHOTO CELL
- (FC) FAN CONTROL
- C.O. CONDUIT RUN IN WALL OR CEILING.
- A–1,3 CONDUIT HOME RUN TO PANEL "A", CIRCUITS 1 & 3.
- 1/2" CONDUIT 2#12 THHN, CU OR AS NOTED
- 1/2" CONDUIT 3#12 THHN, CU OR AS NOTED.
- 1/2" CONDUIT 4#12 THHN, CU OR AS NOTED.
- 1/2" CONDUIT 5#12 THHN, CU OR AS NOTED.
- 1/2" CONDUIT 6#12 THHN, CU OR AS NOTED.
- 1/2" CONDUIT 7#12 THHN, CU OR AS NOTED.
- DEDICATED DUPLEX CONVENIENCE RECEPTACLE +15" OR AS NOTED.
- DUPLEX CONVENIENCE OUTLET 20 A, 125 V, 3 WIRE GROUND TYPE +15" OR AS NOTED.
- DOUBLE DUPLEX OUTLET, AS ABOVE, +15" OR AS NOTED.
- 208V 30A–208V 1ø, 3 WIRE LOCKING RECEPTACLE NEMA L6–30R
- GFI GROUND FAULT INTERUPTING TYPE RECEPTACLE. +42" OR AS NOTED.
- CEILING MOUNT DUPLEX OUTLET–20A, 125V, 3 WIRE GROUND TYPE.
- FLOOR MOUNTED JUNCTION BOX, DUPLEX OUTLET. PROVIDE 120V SINGLE PHASE, 15 AMP AND THREE WIRE (GROUNDED). COORDINATE LOCATION W/ TENANT AND FURNITURE CONTRACTOR REQUIREMENTS.
- FLOOR CORE FURNITURE CONNECTION: ELECT./DATA, SURFACE MOUNTED. COORDINATE LOCATION W/TENANT AND FURNITURE CONTRACTOR REQUIREMENTS.
- WELDING RECEPTACLE. VERIFY LOCATION AND MOUNTING HEIGHT WITH THE OWNER.
- TV T.V. CABLE.
- (J) JUNCTION BOX, SIZE AS REQUIRED.
- (T) THERMOSTAT, TO BE MOUNTED AT 60" AFF WIRE INSTALLATION & CONNECTION BY MECHANICAL CONTRACTOR CONDUIT, J–BOX & CONDUIT CONNECTION BY ELECT. CONTRACTOR
- F FUSED DISCONNECT SWITCH. SIZE FUSE PER MANUFACTURER'S NAMEPLATE.
- STARTER AND FUSED DISCONNECT SWITCH.
- EF EXHAUST FAN.
- GD GARBAGE DISP.
- DW DISHWASHER
- N NEW WALL MTD. DATA/TELEPHONE (STANDARD MOD. TAP) OUTLET AT 18" UNO. (2 DATA LINES)
- E EXIST. WALL MTD. DATA/TELEPHONE OUTLET (2 DATA LINES)
- 2 N NEW WALL MTD. MODTAP W/ 2 DATA LINES ONLY. OUTLET AT 18" UNO.
- 3 N NEW WALL MTD. MODTAP W/ 1 TELEPHONE LINE AND 2 DATA LINES
- DMT NEW WALL MTD. 2 TELEPHONE/2 DATA MOD TAP OUTLET AT 18" AFF, UNO.
- FLOOR MOUNTED JUNCTION BOX, TELE/DATA. VERIFY CONDUIT SIZE FOR DATA/TELE. REQUIREMENTS. COORDINATE LOCATION W/ TENANT AND FURNITURE CONTRACTOR REQUIRMENTS.
- $ SINGLE POLE TOGGLE SWITCH +46" OR AS NOTED.
- $ ob BI–LEVEL SWITCHING PER TITLE 24. +46" OR AS NOTED.
- $ 3 3 WAY SWITCH. +46" OR AS NOTED.
- $ 4 4 WAY SWITCH. +46" OR AS NOTED.
- $ M 20A, 2P, 208V. MOTOR RATED MANUAL DISCONNECT SWITCH WITH PROPER SIZED OVERLOADS FOR MOTOR PROTECTION.
- $ T 2 HOUR SPRING WOUND TIME SWITCH.
- START/STOP SWITCH
- $ D DIMMER SWITCH +46" OR AS NOTED
- bb AUTOMATIC WALL SWITCH 120 VAC;60HZ WATT STOPPER CAT.# WI–300 OR EQUAL
- CEILING MOUNT OCCUPANCY SENSOR–WATT STOPPER CAT.# DT 355 OR EQUAL
- NEW WALL MOUNT MOTION SENSOR WITH SWITCH OVERRIDE +46" OR AS NOTED. WATT STOPPER WA–300 OR EQUAL. MANUAL ON AUTO OFF.
- T/C ELECTRICAL PANEL, FLUSH MOUNTED.
- ELECTRICAL PANEL, FLUSH MOUNTED.
- ELECTRICAL PANEL, SURFACE MOUNTED.
- MAIN ELECTRICAL SWITCHBOARD AND/OR METER GROUP.
- TBB MAIN TELEPHONE BACKBOARD
- DETAIL REFERENCE SYMBOL
- SC INDICATES SEPARATE CIRCUIT
- RE RELOCATE EXISTING
- R REMOVE EXISTING
- E EXISTING
- N NEW

ABBREVIATIONS

A/C	AIR CONDITIONER	MTB	MAIN TELEPHONE BOARD
ARCH	ARCHITECTURAL	(N)	NEW DEVICE
CO	CONDUIT ONLY	NIC	NOT IN CONTRACT
CKT	CIRCUT	NTS	NOT TO SCALE
DISC	DISCONNECT	PB	PULL BOX
DWGS	DRAWINGS	PNL	PANEL
(E)	EXISTING DEVICE	(R)	REMOVE
EF	EXHAUST FAN	(RE)	TO BE RELOCATED / RELOCATED
FLA	FULL LOAD AMPERES	REC	RECEPTACLE
GALV	GALVANIZED	SC	SEPARATE CIRCUIT
GND	GROUND	SW	SWITCH
GFI	GROUND FAULT INTERRUPTER	T/C	TIME CLOCK
LTG	LIGHTING	TELE	TELEPHONE
MECH	MECHANICAL	UG	UNDERGROUND
SCE	SOUTHERN CALIFORNIA EDISON	WP	WEATHER PROOF
PVC	POLY VINYL CHLORIDE	SCH	SCHEDULE

ELECTRICAL SHEET INDEX

SHEET	DESCRIPTION
E–1	ELECTRICAL NOTES & SYMBOLS
E–2	OVERALL SITE POWER PLAN
E–3	WELL SITE SINGLE LINE DIAGRAM
E–4	NOT USED
E–5	WELL SITE ENLARGED POWER PLAN
E–6	WELL SITE ENLARGED LIGHTING PLAN
E–7	WELL SITE CONTROL PANEL LAYOUT & BILL OF MATERIAL
E–8	WELL SITE CONTROL PANEL WIRING DIAGRAM
E–9	TREATMENT PLANT SINGLE LINE DIAGRAM
E–10	TREATMENT PLANT LOAD SCHEDULES
E–11	TREATMENT PLANT POWER PLAN (NOT INCLUDED)
E–12	TREATMENT PLANT ELECTRICAL WIRING DIAGRAM PART 1
E–13	TREATMENT PLANT ELECTRICAL WIRING DIAGRAM PART 2
E–14	TREATMENT PLANT ELECTRICAL WIRING DIAGRAM PART 3
E–15	TREATMENT PLANT REMOTE CONTROL PANEL LAYOUT
E–16	TREATMENT PLANT REMOTE CONTROL WIRING DIAGRAM PART 1
E–17	TREATMENT PLANT REMOTE CONTROL WIRING DIAGRAM PART 2
E–19	ELECTRICAL DETAILS
E–20	TREATMENT PLANT EXISTING PLC LAYOUT & BILL OF MATERIAL
E–22	RANDALL AVE ELECTRICAL PLOT PLAN
E–23	RANDALL AVE CP LAYOUT
E–24	RANDALL AVE CP LAYOUT AND BOM
E–25	RANDALL AVE ELECTRICAL WIRING DIAGRAM
E–26	TREATMENT PLANT EQUIPMENT PAD GROUNDING PLAN

REV	DATE	REVISION	APPR'D	REV BY
–	2/28/14	SUBMITTAL TO SCE		

E8046
EXP. 9–30–14

JIM RUBINO
AUTOMATION & CONTROL SYSTEM DESIGN
4821 Burgundy Road
Woodland Hills, CA 91364
Tel (818) 225–7680
Fax (818) 225–7681
www.logicontrol.com

ERM

GROUNDWATER EXTRACTION AND TREATMENT SYSTEM COMBINED REMEDY SOURCE AREA OPERABLE UNIT, ROCKETS, FIREWORKS, AND FLARES SUPERFUND SITE

SCALE	AS SHOWN	DESIGNED BY	JR/GV	DRAWN BY	JR/GV	DRAWING NUMBER	
DATE	FEB 2014	CHECKED	GV	APPROVED		JOB NUMBER	2013175.00

ELECTRICAL NOTES & SYMBOLS

REV

SHEET 60

DISCIPLINE NO. E-1

ENVIRONMENTAL RESOURCES MANAGEMENT

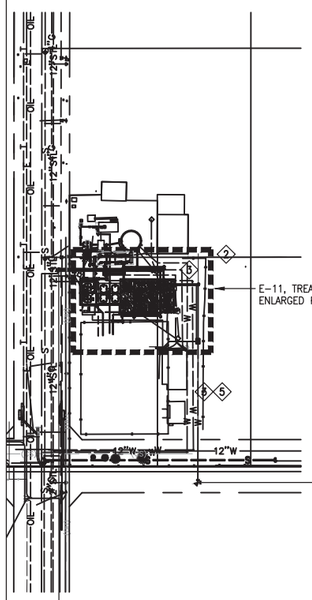

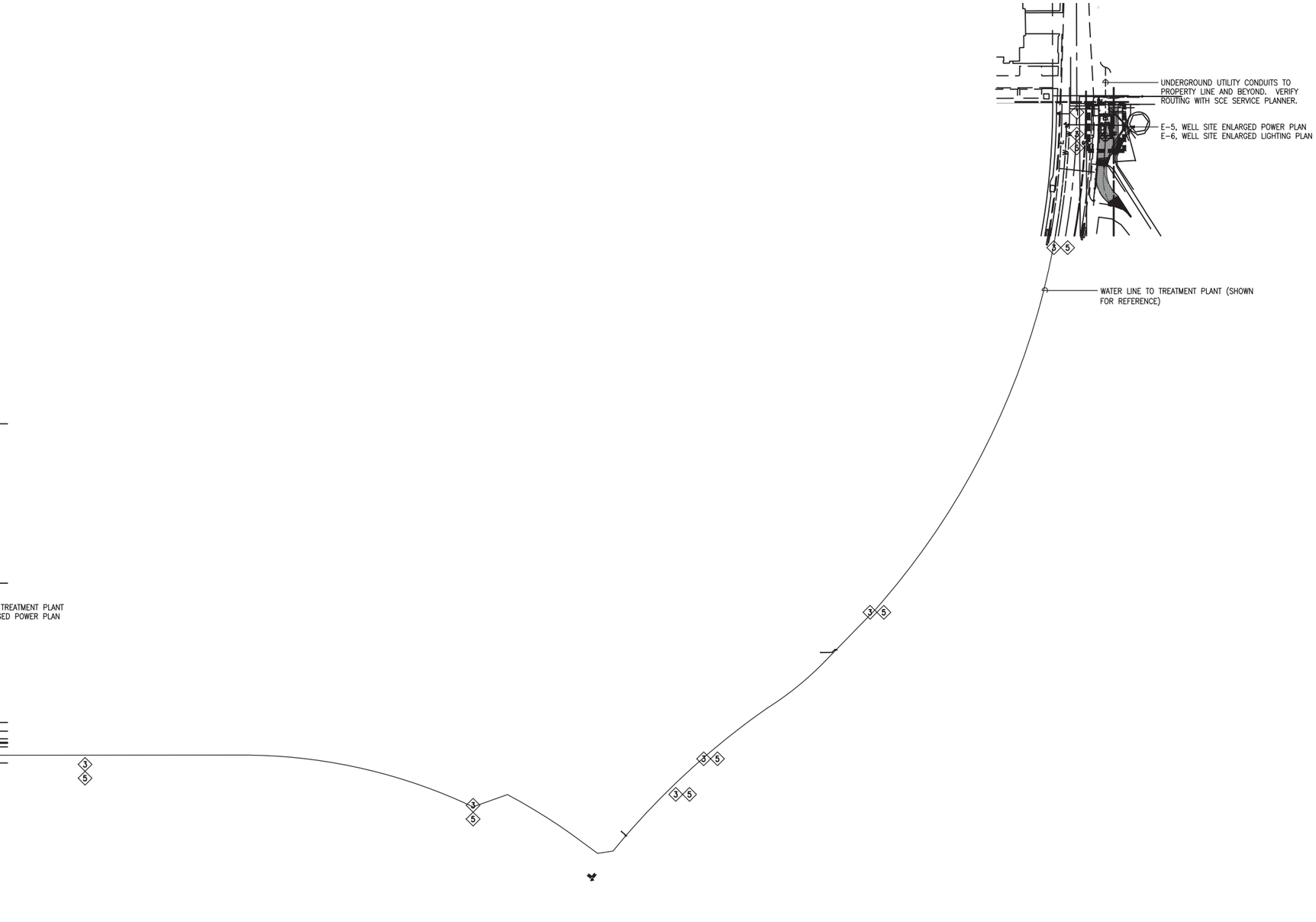

SHEET REFERENCED NOTES

1. NEW WELL SITE TO BE FED VIA NEW UNDERGROUND SERVICE. SEE WELL SITE SINGLE LINE DIAGRAM AND ENLARGED PLANS FOR ADDITIONAL INFORMATION.
2. NEW TREATMENT PLANT SITE TO BE FED FROM EXISTING DISTRIBUTION. SEE TREATMENT SITE SINGLE LINE DIAGRAM AND ENLARGED PLANS FOR ADDITIONAL INFORMATION.
3. WATER LINE FROM WELL SITE TO TREATMENT PLANT.
4. OUTGOING LINE FROM TREATMENT PLANT SHOWN FOR REFERENCE.
5. (2) CORNING ALTOS GEL-FREE, TRIPLE-JACKET, DOUBLE ARMORED, 12-216 FIBER OPTIC CABLES. CABLES RUN FROM CONTROL PANEL AT NEW WELL SITE TO NEW MANHOLE (REF DRAWING E-11) AT EXISTING TREATMENT PLANT. ONE CABLE WILL CONTINUE FROM MANHOLE TO THE EXISTING CONTROL PANEL IN THE WELL CR-3 BUILDING, THE OTHER IS A SPARE AND WILL COIL AND STORE IN THE MANHOLE. REF DETAIL 3, DRAWING C-19 FOR CABLE PLACEMENT IN WATER LINE TRENCH. FOLLOW MANUFACTURER'S RECOMMENDATIONS FOR CABLE HANDLING AND MINIMUM BENDING RADIUS. SPLICES SHALL BE LOCATED AT CONTRACTORS DISCRETION. ALL SPLICES AND TERMINATIONS SHALL BE PERFORMED BY PERSONNEL CERTIFIED AND EXPERIENCED AT THIS WORK.

REV	DATE	REVISION	APPR'D	REV BY
–	2/28/14	SUBMITTAL TO SCE		

E8046
EXP. 9-30-14

JIM RUBINO
AUTOMATION & CONTROL SYSTEM DESIGN
4821 Burgundy Road
Woodland Hills, CA 91364
Tel (818) 225-7680
Fax (818) 225-7681
www.logicontrol.com

ERM

GROUNDWATER EXTRACTION AND TREATMENT SYSTEM COMBINED REMEDY SOURCE AREA OPERABLE UNIT, ROCKETS, FIREWORKS, AND FLARES SUPERFUND SITE

REV

SCALE	DESIGNED BY	DRAWN BY	DRAWING NUMBER
AS SHOWN	JR/GV	JR/GV	
DATE FEB 2014	CHECKED GV	APPROVED	JOB NUMBER 2013175.00

SHEET 61

OVERALL SITE POWER PLAN

DISCIPLINE NO. E-2

ENVIRONMENTAL RESOURCES MANAGEMENT

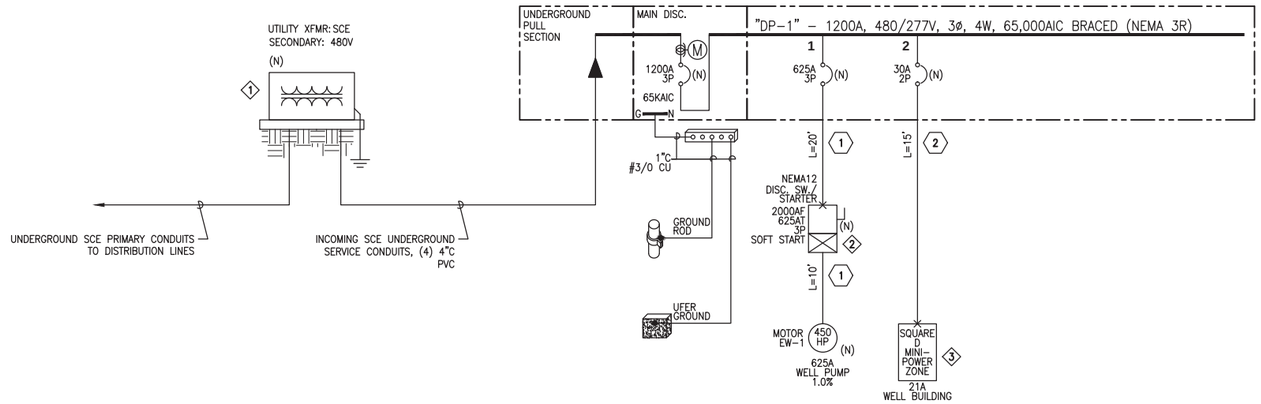

WELL SITE SINGLE LINE DIAGRAM

NOT TO SCALE

SHEET REFERENCED NOTES

1. NEW PADMOUNT TRANSFORMER
2. WELL PUMP STARTER WITH INTEGRAL CIRCUIT BREAKER.
3. SQUARE D CAT No. MPZ10S40F (10 KVA, 480–240/120 1ø)

FEEDER SCHEDULE

1. (3) 2-1/2"C 4#300MCM THWN CU & 2/0 CU GRD
2. (1) 1"C 3#10 THWN CU & 1#10 CU GRD

DISTRIBUTION BOARD DP-1 — NEW

VOLTAGE: 480 V
PHASE: 3 Ø
WIRES: 4 W
AMPERAGE: 1200 A

SOURCE: MS
PANEL LOCATION: OUTSIDE WELL BLDG
FAULT CURRENT: 65KAIC BRACED
M.L.O. ☐ M.C.B ☑ 1200A, 3P

NOTE	IDENTIFICATION	OTHER	REC.	LTG.	LOAD (WATTS) ØA	ØB	ØC	SW/FUSE	POLE	BKR. NO.	BKR. NO.	POLE	SW/FUSE	LOAD (WATTS) ØA	ØB	ØC	LTG.	REC.	OTHER	IDENTIFICATION	NOTE
	EW-1 VIA SOFT START	1			163312	163312	163312	625	3	1	2	2	30	5000	5000		3	2		SQUARE D MINI POWER ZONE (LP-1)	
	SPACE								3	2	4	3								SPACE	
	SPACE								3	3	6	3								SPACE	
	SPACE								3	4	8	3								SPACE	
	SPACE								3	5	10	3								SPACE	
	SPACE								3	7	12	3								SPACE	
	SPACE								3	9	14	3								SPACE	
	SUBTOTAL WATTS	1	0	0	163312	163312	163312		0		0			5000	5000		3	2	0	SUBTOTAL WATTS	

TOTAL WATTS A PHASE 168312
TOTAL WATTS B PHASE 168312
TOTAL WATTS C PHASE 163312

MAX. CONN. PHASE AMPS
TOTAL CONNECTED KVA 499.936
TOTAL DEMAND KVA 616.920
TOTAL AMPS 742.919

WELL SITE LOAD SCHEDULE

NOT TO SCALE

MINI POWERZONE LP-1 — NEW

VOLTAGE: 120/240 v
PHASE: 1 Ø
WIRES: 3 W
AMPERAGE: 60 A

SOURCE: DP-1
PANEL LOCATION: INSIDE WELL BLDG
FAULT CURRENT: 10KAIC BRACED
M.L.O. ☐ M.C.B ☑ 60A, 2P

NOTE	IDENTIFICATION	OTHER	REC.	LTG.	LOAD (WATTS) ØA	ØB	BREAKER	POLE	BKR. NO.	BKR. NO.	POLE	BREAKER	LOAD (WATTS) ØA	ØB	LTG.	REC.	OTHER	IDENTIFICATION	NOTE
	EW-1 CONTROL CIRCUIT	1			1000		15	1	1	2	2	25	696				1	EXHAUST FAN	
	LIGHTING (INTERIOR/EXTERIOR)			6		1080	20	1	3	4	2	15		2895			1	AIR CONDITIONER	
	RECEPTACLE		2		720		20	1	5	6	1	20						SPARE	
	SPARE							1	7	8	1	20						SPARE	
	SPACE								9	10								SPACE	
	SPACE								11	12								SPACE	
	SPACE								13	14								SPACE	
	SUBTOTAL WATTS	1	2	6	1720	1080			0	0			696	2875			2	SUBTOTAL WATTS	

TOTAL WATTS A PHASE 3975
TOTAL WATTS B PHASE 2416

MAX. CONN. PHASE AMPS 33.13
TOTAL CONNECTED KVA 6.37
TOTAL DEMAND KVA 1.17
TOTAL AMPS 31.42

WELL SITE LOAD SCHEDULE

NOT TO SCALE

SHEET GENERAL NOTES

1. ALL EQUIPMENT IS NEW UNLESS NOTED OTHERWISE.
2. SWITCHBOARDS AND PANEL BOARDS THAT ARE LIKELY TO BE ENERGIZED WHILE BEING MAINTAINED OR SERVICED BY QUALIFIED PERSONNEL SHALL BE LABELED WARNING OF POSSIBLE ARC FLASH HAZARDS (110.16).
3. FULLY RATED BREAKERS HAVE BEEN PROVIDED AT MAIN AND FEEDER BREAKERS. SERIES RATING MAY BE USED FOR DOWNSTREAM BRANCH DEVICES ACCORDING TO MANUFACTURER. IF SERIES RATING IS USED, PROVIDE A CAUTIONARY LABEL TO SERIES RATED DEVICE COVERS STATING "CAUTION – SERIES RATED SYSTEM AVAILABLE. IDENTIFIED REPLACEMENT COMPONENT AVAILABLE."
4. REFER TO LOAD SCHEDULE "DP-1" FOR TOTAL SERVICE LOAD.
5. GROUNDING SYSTEMS SHALL COMPLY WITH ALL APPLICABLE REQUIREMENTS OF ARTICLE 250 OF THE CURRENT EDITION OF THE CALIFORNIA ELECTRICAL CODE (CEC).
6. REFER TO DWG. E-6 FOR LIGHTING PLAN

REV	DATE	REVISION	APPR'D	REV BY
–	2/28/14	SUBMITTAL TO SCE		

E8046 EXP. 9-30-14

JIM RUBINO
AUTOMATION & CONTROL SYSTEM DESIGN
4821 Burgundy Road
Woodland Hills, CA 91364
Tel (818) 225-7680
Fax (818) 225-7681
www.logicontrol.com

ERM

GROUNDWATER EXTRACTION AND TREATMENT SYSTEM COMBINED REMEDY SOURCE AREA OPERABLE UNIT, ROCKETS, FIREWORKS, AND FLARES SUPERFUND SITE

SCALE	DESIGNED BY	DRAWN BY	DRAWING NUMBER
AS SHOWN	JR/GV	JR/GV	
DATE FEB 2014	CHECKED GV	APPROVED	JOB NUMBER 2013175.00

WELL SITE SINGLE LINE DIAGRAM

REV

SHEET 62

DISCIPLINE NO. E-3

ENVIRONMENTAL RESOURCES MANAGEMENT

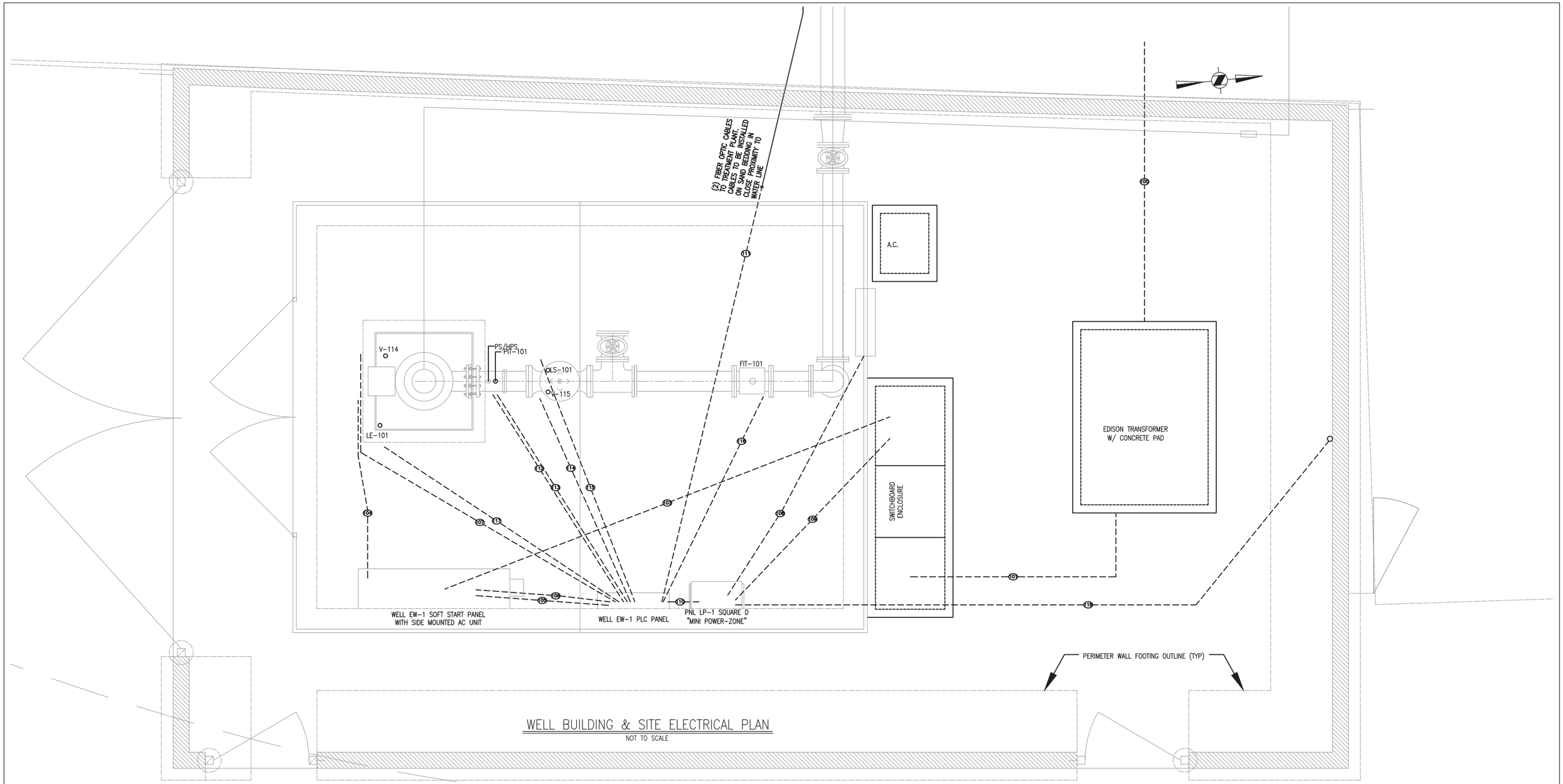

WELL BUILDING & SITE ELECTRICAL PLAN

NOT TO SCALE

CONDUIT AND WIRE SCHEDULE					
No.	COND	WIRE	FROM	TO	REMARKS
100	TBD	FURNISHED BY UTILITY CO.	PADMOUNT BOX	UTILITY POINT OF CONNECTION	
101	TBD	FURNISHED BY UTILITY CO.	PADMOUNT BOX	SERVICE UG PULL SECTION	
102	3/4"	(3) #14	PLC PANEL	SOLENOID SV 114	
103	(3) 2.5"	(3) 300 kcmil, (1) #2/0	PANEL MDP	WELL EW-1 MOTOR RVSSS	
104	(3) 2.5"	(3) 300 kcmil, (1) #2/0	EW-1 MOTOR RVSSS	WELL EW-1 MOTOR	
105	3/4"	CONDUIT ONLY	PLC PANEL	EW-1 MOTOR RVSSS	
106	3/4"	(1) ETHERNET CABLE	PLC PANEL	EW-1 MOTOR RVSSS	
107	3/4"	(3) #14	PLC PANEL	EW-1 SHAFT OILER SOV	
108	3/4"	(3) #10	MINI PWR-ZONE (LP-1)	AC COMPRESSOR UNIT	
109	3/4"	(4) #10	PANEL MDP	MINI PWR-ZONE (LP-1)	
110	3/4"	(3) #14	MINI PWR-ZONE (LP-1)	PLC PANEL	
111	2"	(2) FIBER OPTIC CABLES	TREATMENT PLANT	PLC PANEL	SEE NOTE 1 BELOW
112	3/4"	(4) #14	PLC PANEL	PRESS SWITCHES PS & HPS	
113	3/4"	(1) BELDEN 8451	PLC PANEL	PIT 101	
114	3/4"	(3) #14	PLC PANEL	SOLENOID SV 115	
115	3/4"	(4) #14	PLC PANEL	LS-101	
116	3/4"	(1) BELDEN 8451	PLC PANEL	FT-101	
117	3/4"	(1) BELDEN 8451	PLC PANEL	LE-101	
118	3/4"	(3) #12	MINI PWR-ZONE (LP-1)	WALL-PAK LIGHT ON N. WALL	MOUNT FIXTURE @ +7'0"
119	3/4"				

NOTE 1: USE LARGE RADIUS ELBOW AT PLC PANEL ENTRY, STUB CONDUIT ± 12" BEYOND BUILDING WALL.

REV	DATE	REVISION	APPR'D	REV BY
–	2/28/14	SUBMITTAL TO SCE		

E8046
EXP. 9-30-14

JIM RUBINO
AUTOMATION & CONTROL SYSTEM DESIGN

4821 Burgundy Road
Woodland Hills, CA 91364
Tel (818) 225-7680
Fax (818) 225-7681
www.logicontrol.com

ERM

GROUNDWATER EXTRACTION AND TREATMENT SYSTEM COMBINED REMEDY SOURCE AREA OPERABLE UNIT, ROCKETS, FIREWORKS, AND FLARES SUPERFUND SITE

SCALE	DESIGNED BY	DRAWN BY	DRAWING NUMBER
AS SHOWN	JR/GV	JR/GV	
DATE	CHECKED	APPROVED	JOB NUMBER
FEB 2014	GV		2013175.00

WELL SITE ELECTRICAL CONDUIT AND GROUNDING PLAN

ENVIRONMENTAL RESOURCES MANAGEMENT

REV

SHEET 64

DISCIPLINE NO. E-5

SHEET REFERENCED NOTES

1. SWITCHED OUTLET AT 90"AFF FOR CORD CONNECTION OF CEILING FIXTURES. RECEPTACLE IS HUBBELL L1420R. ALLOWS REMOVAL OF BUILDING ROOF FOR MAINTENANCE OF PUMP.
2. WALL MOUNTED OUTDOOR EMERGENCY EGRESS FIXTURE. PROVIDE MOTION SENSOR CONTROL.
3. CEILING MOUNTED T8 FIXTURES. PROVIDE WIRE CAGE FOR PROTECTION FROM DAMAGE.
4. 4 CONDUCTOR 16 AWG SJO CORD WITH HUBBELL L1420P PLUG. CONNECT TO FIXTURE WITH PROPERLY SIZED STRAIN RELIEF CONNECTOR. ALLOWS REMOVAL OF BUILDING ROOF FOR MAINTENANCE OF PUMP.

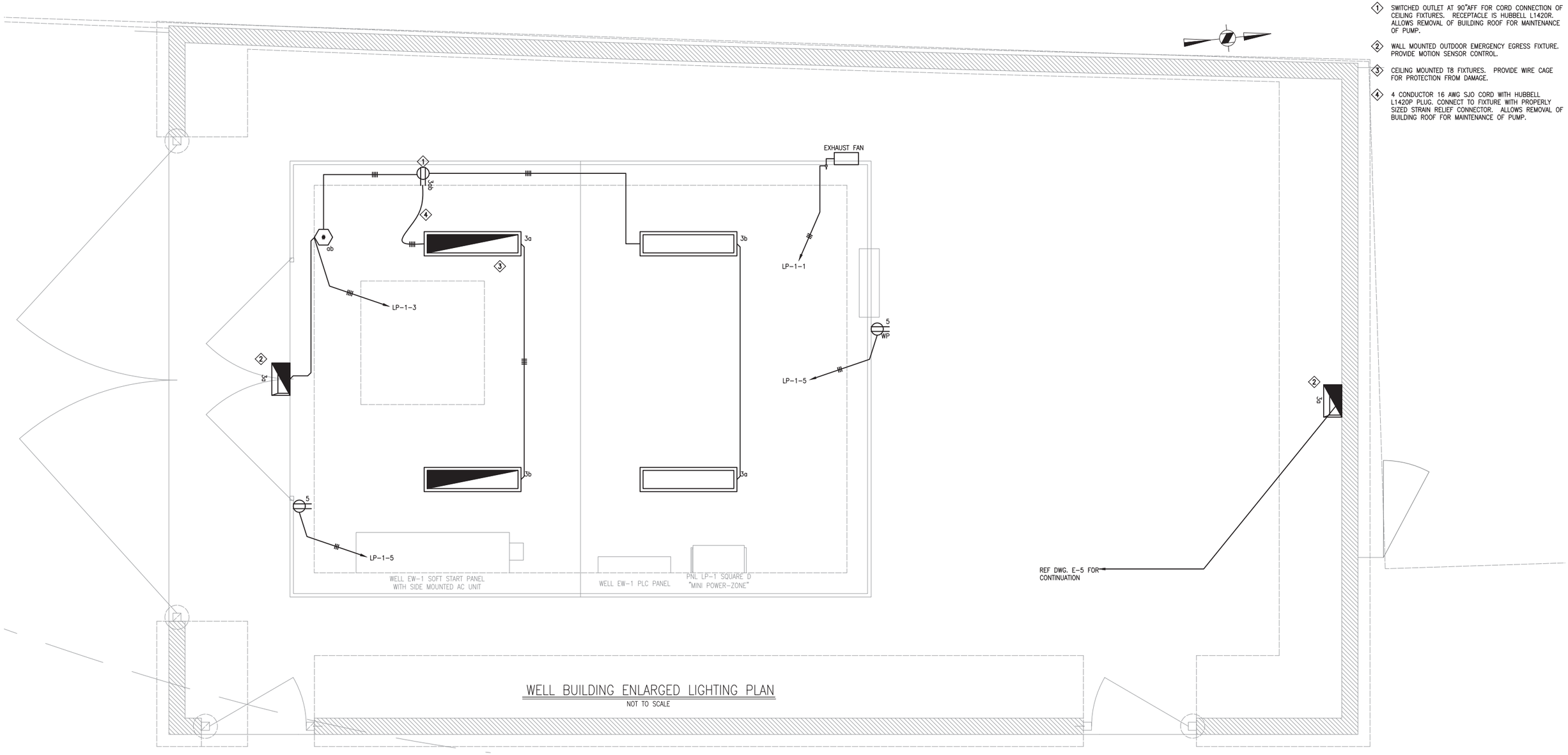

WELL BUILDING ENLARGED LIGHTING PLAN

NOT TO SCALE

REV	DATE	REVISION	APPR'D	REV BY
–	2/28/14	SUBMITTAL TO SCE		

E8046 EXP. 9-30-14

JIM RUBINO
AUTOMATION & CONTROL SYSTEM DESIGN

4821 Burgundy Road
Woodland Hills, CA 91364
Tel (818) 225-7680
Fax (818) 225-7681
www.logicontrol.com

ERM

GROUNDWATER EXTRACTION AND TREATMENT SYSTEM COMBINED REMEDY SOURCE AREA OPERABLE UNIT, ROCKETS, FIREWORKS, AND FLARES SUPERFUND SITE

SCALE	DESIGNED BY	DRAWN BY	DRAWING NUMBER
AS SHOWN	JR/GV	JR/GV	
DATE	CHECKED	APPROVED	JOB NUMBER
FEB 2014	GV		2013175.00

WELL SITE ENLARGED LIGHTING PLAN

REV

SHEET 65

DISCIPLINE NO. E-6

ENVIRONMENTAL RESOURCES MANAGEMENT

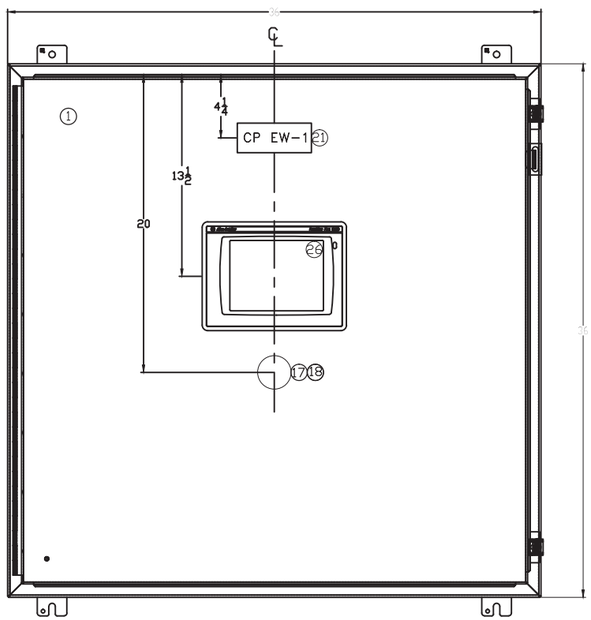

EXTERIOR ELEVATION 1 / –
NOT TO SCALE

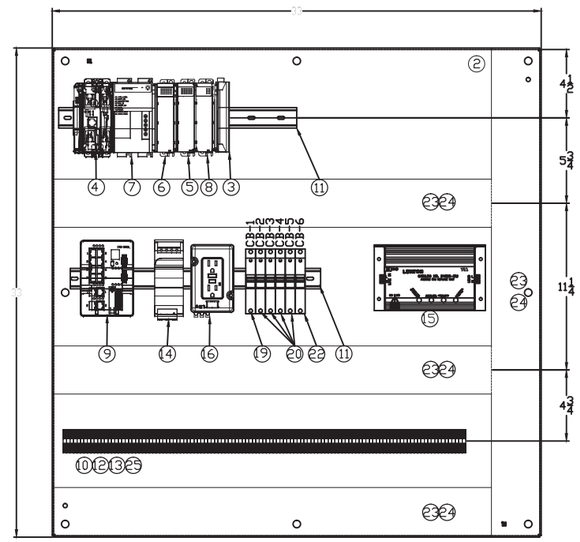

INTERIOR ELEVATION 2 / –
NOT TO SCALE

BILL OF MATERIAL

No.	DESCRIPTION	MANUFACTURER	CATALOG No.	QTY
1	ENCLOSURE	HOFFMAN ENG.	A363608LP	1
2	PANEL	HOFFMAN ENG.	A36P36	1
3	RIGHT END TERMINATOR	ROCKWELL AUTOMATION	1769–ECR	1
4	COMPACT LOGIX CPU	ROCKWELL AUTOMATION	1769–L35E	1
5	DIGITAL OUTPUT MODULE	ROCKWELL AUTOMATION	1769–OW16	1
6	DIGITAL INPUT MODULE	ROCKWELL AUTOMATION	1769–IA16	1
7	PLC POWER SUPPLY	ROCKWELL AUTOMATION	1769–PA4	1
8	ANALOG INPUT MODULE	ROCKWELL AUTOMATION	1763–IF8	1
9	8 CU/2 FO ENET SW	ROCKWELL AUTOMATION	1783–BMS10CL	1
10	TERMINAL BLOCK	ROCKWELL AUTOMATION	1492–H1	100
11	DIN RAIL	ROCKWELL AUTOMATION	199–DR1	2
12	END BARRIER	ROCKWELL AUTOMATION	1492–N36	1
13	END ANCHOR	ROCKWELL AUTOMATION	1492–N47	2
14	24VDC PWR SUPPLY 2.5A	ROCKWELL AUTOMATION	1606–XL60D	1
15	TVSS–120VAC	LEVITON	51020WM	1
16	120V DIN RAIL RECEPT	ROCKWELL AUTOMATION	1492–REC15	1
17	E–STOP PUSH–PULL	ROCKWELL AUTOMATION	800T–FX6D4	1
18	E–STOP LEGEND PLATE	ROCKWELL AUTOMATION	800T–X504Y (YELLOW)	1
19	10 AMP CIR BREAKER	ROCKWELL AUTOMATION	1489–MIC100	1
20	2 AMP CIR BREAKER	ROCKWELL AUTOMATION	1489–MIC020	4
21	NAMEPLATE	CUSTOM 5" X 2"	BLK W/WHT LETTERS	1
22	5 AMP CIR BREAKER	ROCKWELL AUTOMATION	1489–MIC050	1
23	3" X 3" WIREWAY	PANDUIT	E3X3W6	2
24	3" WIREWAY COVER	PANDUIT	C3W6	2
25	TERM MOUNTING RAIL	ROCKWELL AUTOMATION	1492–N22	1
26	OIT–PANELVIEW PLUS 6	ROCKWELL AUTOMATION	2711P–T10C4A8	1
27				
28				
29				
30				

BILL OF MATERIALS 3 / –

REV	DATE	REVISION	APPR'D	REV BY
–	2/28/14	SUBMITTAL TO SCE		

E8046
EXP. 9–30–14

JIM RUBINO
AUTOMATION & CONTROL SYSTEM DESIGN

4821 Burgundy Road
Woodland Hills, CA 91364
Tel (818) 225–7680
Fax (818) 225–7681
www.logicontrol.com

ERM

GROUNDWATER EXTRACTION AND TREATMENT SYSTEM COMBINED REMEDY SOURCE AREA OPERABLE UNIT, ROCKETS, FIREWORKS, AND FLARES SUPERFUND SITE

REV

SCALE	DESIGNED BY	DRAWN BY	DRAWING NUMBER
AS SHOWN	JR/GV	JR/GV	
DATE	CHECKED	APPROVED	JOB NUMBER
FEB 2014	GV		2013175.00

SHEET 66

WELL SITE CONTROL PANEL LAYOUT
& BILL OF MATERIAL

DISCIPLINE NO. E-7

ENVIRONMENTAL RESOURCES MANAGEMENT

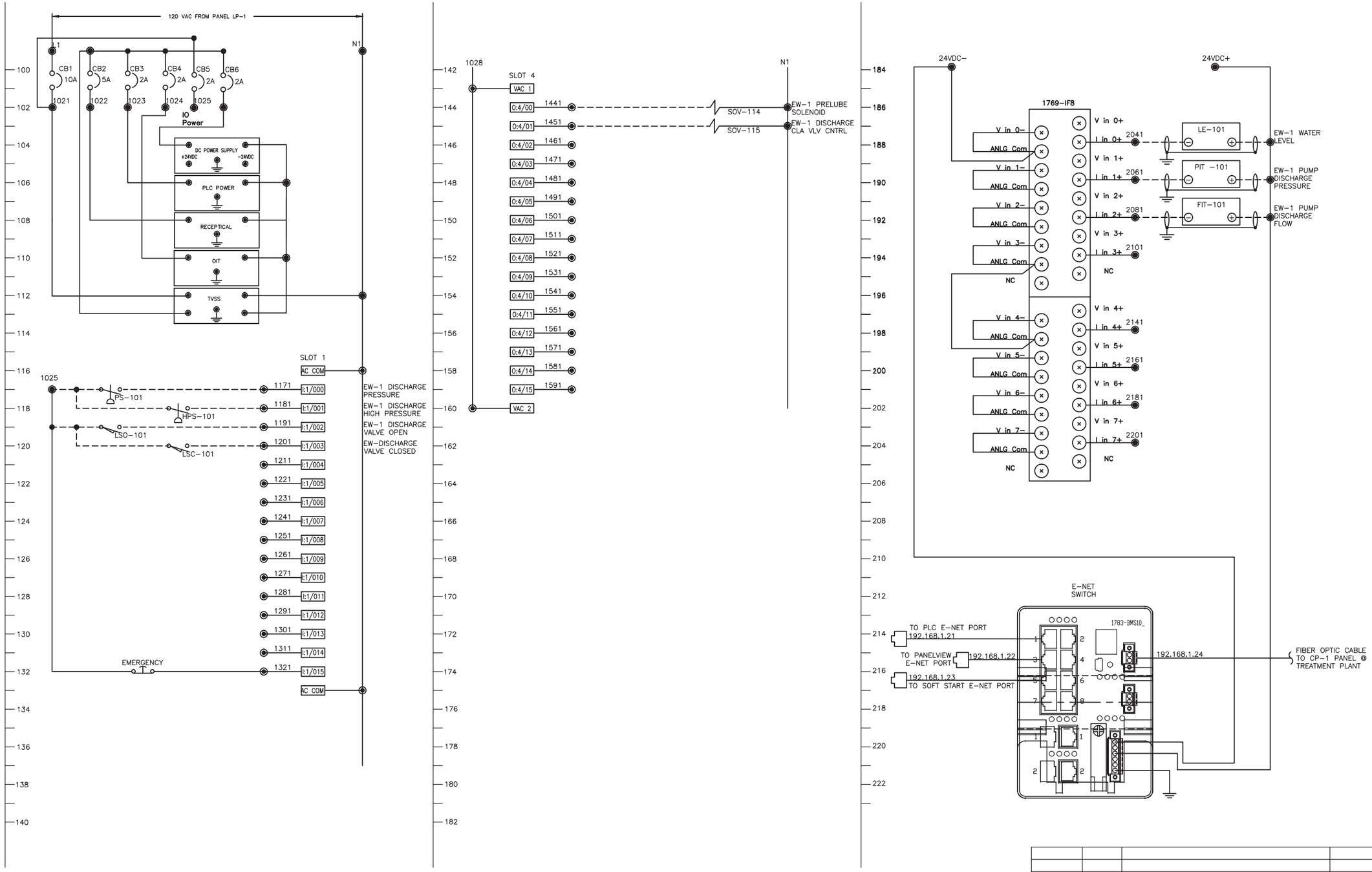

REV	DATE	REVISION	APPR'D	REV BY
–	2/28/14	SUBMITTAL TO SCE		

GROUNDWATER EXTRACTION AND TREATMENT SYSTEM COMBINED REMEDY SOURCE AREA OPERABLE UNIT, ROCKETS, FIREWORKS, AND FLARES SUPERFUND SITE

REV

SCALE	DESIGNED BY	DRAWN BY	DRAWING NUMBER	SHEET
AS SHOWN	JR/GV	JR/GV		67
DATE FEB 2014	CHECKED GV	APPROVED	JOB NUMBER 2013175.00	

WELL SITE CONTROL PANEL WIRING DIAGRAM

DISCIPLINE NO. E-8

E8046 EXP. 9-30-14

JIM RUBINO
AUTOMATION & CONTROL SYSTEM DESIGN

4821 Burgundy Road
Woodland Hills, CA 91364
Tel (818) 225-7680
Fax (818) 225-7681
www.logicontrol.com

ERM

ENVIRONMENTAL RESOURCES MANAGEMENT

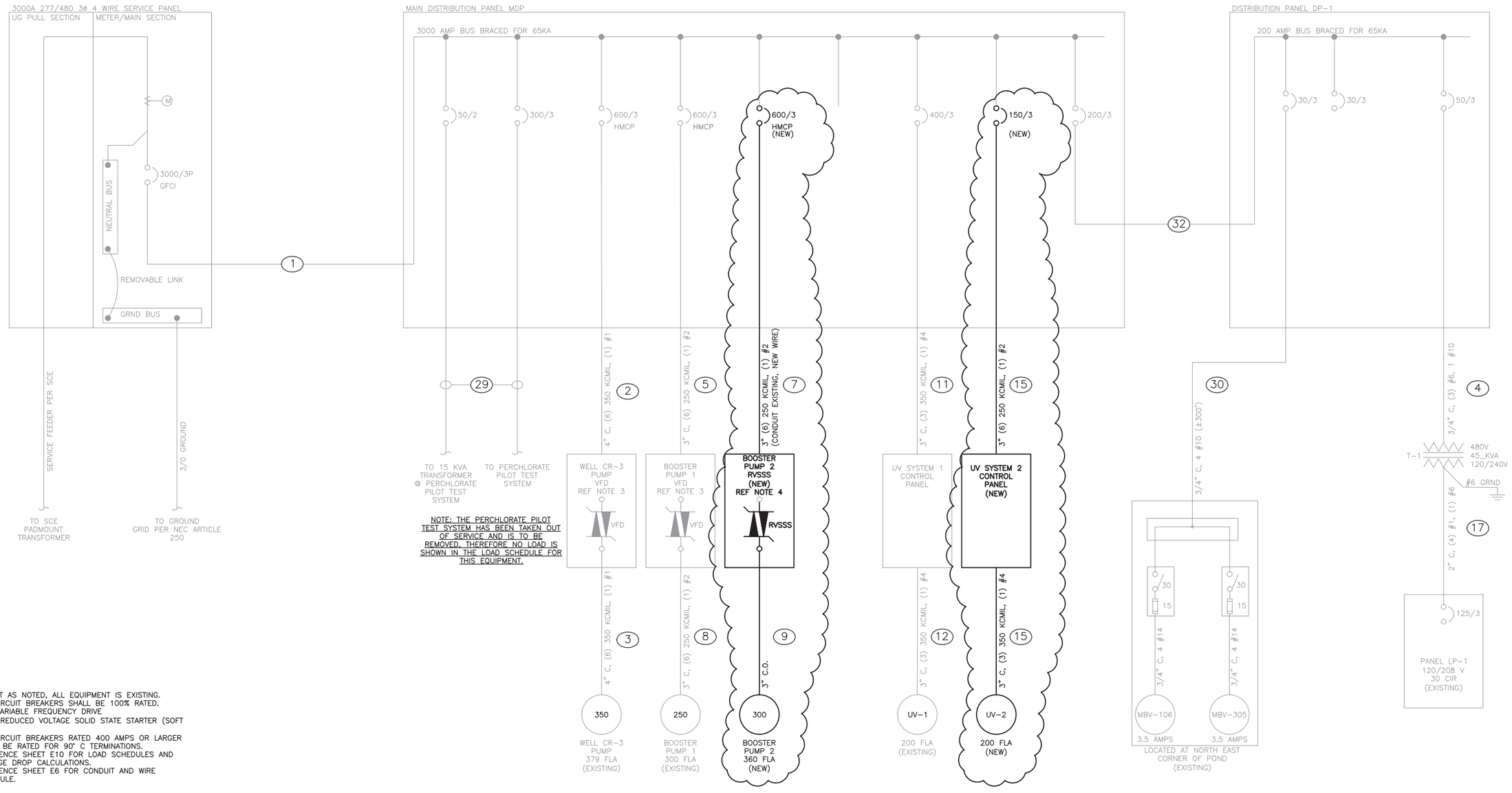

NOTE: THE PERCHLORATE PILOT TEST SYSTEM HAS BEEN TAKEN OUT OF SERVICE AND IS TO BE REMOVED. THEREFORE NO LOAD IS SHOWN IN THE LOAD SCHEDULE FOR THIS EQUIPMENT.

NOTES:
1. EXCEPT AS NOTED, ALL EQUIPMENT IS EXISTING.
2. ALL CIRCUIT BREAKERS SHALL BE 100% RATED.
3. VFD=VARIABLE FREQUENCY DRIVE
4. RVSS=REDUCED VOLTAGE SOLID STATE STARTER (SOFT START)
5. ALL CIRCUIT BREAKERS RATED 400 AMPS OR LARGER SHALL BE RATED FOR 90° C TERMINATIONS.
6. REFERENCE SHEET E10 FOR LOAD SCHEDULES AND VOLTAGE DROP CALCULATIONS.
7. REFERENCE SHEET E6 FOR CONDUIT AND WIRE SCHEDULE.

MAXIMUM AVAILABLE SHORT CIRCUIT CURRENT:
BASED ON INFORMATION FROM MR. JOHN DOE (TEL: 123-456=7890) OF SOUTHERN CALIFORNIA EDISON, THE MAXIMUM SHORT CIRCUIT CURRENT FROM THE UTILITY WILL BE 31,654 AMPS.

THE ASSUMED MOTOR CONTRIBUTION WILL BE 7,200 AMPS, MAKING THE TOTAL SHORT CIRCUIT CURRENT 38,854 AMPS.

PANELS MDP AND DP-1 ARE BRACED FOR 65,000 AMPS, WHICH EXCEEDS THE AVAILABLE SHORT CIRCUIT CURRENT.

REV	DATE	REVISION	APPR'D	REV BY
–	2/28/14	SUBMITTAL TO SCE		

E8046
EXP. 9-30-14

JIM RUBINO
AUTOMATION & CONTROL SYSTEM DESIGN

4821 Burgundy Road
Woodland Hills, CA 91364
Tel (818) 225-7680
Fax (818) 225-7681
www.logicontrol.com

ERM

GROUNDWATER EXTRACTION AND TREATMENT SYSTEM COMBINED REMEDY SOURCE AREA OPERABLE UNIT, ROCKETS, FIREWORKS, AND FLARES SUPERFUND SITE

SCALE	DESIGNED BY	DRAWN BY	DRAWING NUMBER
AS SHOWN	JR/GV	JR/GV	
DATE	CHECKED	APPROVED	JOB NUMBER
FEB 2014	GV		2013175.00

REV

SHEET 68

TREATMENT PLANT SINGLE LINE DIAGRAM

DISCIPLINE NO. E-9

ENVIRONMENTAL RESOURCES MANAGEMENT

PANEL MDP LOAD SCHEDULE

VOLTS: 277/480
3 Phase 4 Wire BUS AMPS: 3,000

MOUNTING: FREE STANDING

MAIN: 3,000A/3P C/B
LOCATION: PUMP BUILDING

REMARKS	VA	VA	VA	Misc	Rec	Lts	Poles	Brkr		A	B	C		Brkr	Poles	Lts	Rec	Misc	VA	VA	VA	REMARKS
400 HP WELL PUMP CR3	132864			1			3	600	01				02	200	3			1	16120			PANEL DP-1
400 HP WELL PUMP CR3		132864		1			3	600	03				04	200	3			1		16120		PANEL DP-1
400 HP WELL PUMP CR3			132864	1			3	600	05				06	200	3			1			16120	PANEL DP-1
250 HP BOOSTER PUMP 1	83040			1			3	600	07				08	300	3			1	32000			UV SYSTEM 1
250 HP BOOSTER PUMP 1		83040		1			3	600	09				10	300	3			1		32000		UV SYSTEM 1
250 HP BOOSTER PUMP 1			83040	1			3	600	11				12	300	3			1			32000	UV SYSTEM 1
300 HP BOOSTER PUMP 2	99648			1			3	600	13				14	300	3			1	32000			UV SYSTEM 2
300 HP BOOSTER PUMP 2		99648		1			3	600	15				16	300	3			1		32000		UV SYSTEM 2
300 HP BOOSTER PUMP 2			99648	1			3	600	17				18	300	3			1			32000	UV SYSTEM 2
									19				20	500	3			1	0			PERCHLORATE PILOT TEST *
									21				22	500	3			1		0		PERCHLORATE PILOT TEST *
									23				24	500	3			1			0	PERCHLORATE PILOT TEST *
									25				26									
									27				28									
									29				30									
									31				32									
									33				34									
									35				36									
									37				38									
									39				40									
									41				42									
TOTALS	315552	315552	315552																80120	80120	80120	

TOTAL CONN KVA 1187.016
25% LCL (KVA) 398.604
TOTAL KVA LOAD 1585.614

TOTAL AMPS 1,909.5

* PERCHLORATE PILOT TEST HAS BEEN TAKEN OUT OF SERVICE AND IS TO BE REMOVED.

PANEL DP-1 LOAD SCHEDULE

VOLTS: 277/480
3 Phase 4 Wire BUS AMPS: 3,000

MOUNTING: FREE STANDING

MAIN: 3,000A/3P C/B
LOCATION: PUMP BUILDING

REMARKS	VA	VA	VA	Misc	Rec	Lts	Poles	Brkr		A	B	C		Brkr	Poles	Lts	Rec	Misc	VA	VA	VA	REMARKS
MBV-106, MBV-305	1120			1			3	30	01				02	50	3			1	15000			45 KVA TRANSFORMER
MBV-106, MBV-305		1120		1			3	30	03				04	50	3			1		15000		45 KVA TRANSFORMER
MBV-106, MBV-305			1120	1			3	30	05				06	50	3			1			15000	45 KVA TRANSFORMER
									07				08									
									09				10									
									11				12									
									13				14									
									15				16									
									17				18									
									19				20									
									21				22									
									23				24									
									25				26									
									27				28									
									29				30									
									31				32									
									33				34									
									35				36									
									37				38									
									39				40									
									41				42									
TOTALS	1120	1120	1120																15000	15000	15000	

TOTAL CONN. LOAD (VA) 48,360
25% LCL (VA) 3,750
52,110

TOTAL AMPS 62.75

REV	DATE	REVISION	APPR'D	REV BY
–	2/28/14	SUBMITTAL TO SCE		

E8046
EXP. 9-30-14

JIM RUBINO
AUTOMATION & CONTROL SYSTEM DESIGN

4821 Burgundy Road
Woodland Hills, CA 91364
Tel (818) 225-7680
Fax (818) 225-7681
www.logicontrol.com

ERM

GROUNDWATER EXTRACTION AND TREATMENT SYSTEM COMBINED REMEDY SOURCE AREA OPERABLE UNIT, ROCKETS, FIREWORKS, AND FLARES SUPERFUND SITE

REV

SCALE	DESIGNED BY	DRAWN BY	DRAWING NUMBER
AS SHOWN	JR/GV	JR/GV	
DATE FEB 2014	CHECKED GV	APPROVED	JOB NUMBER 2013175.00

SHEET 69

TREATMENT PLANT LOAD SCHEDULES

DISCIPLINE NO. E-10

ENVIRONMENTAL RESOURCES MANAGEMENT

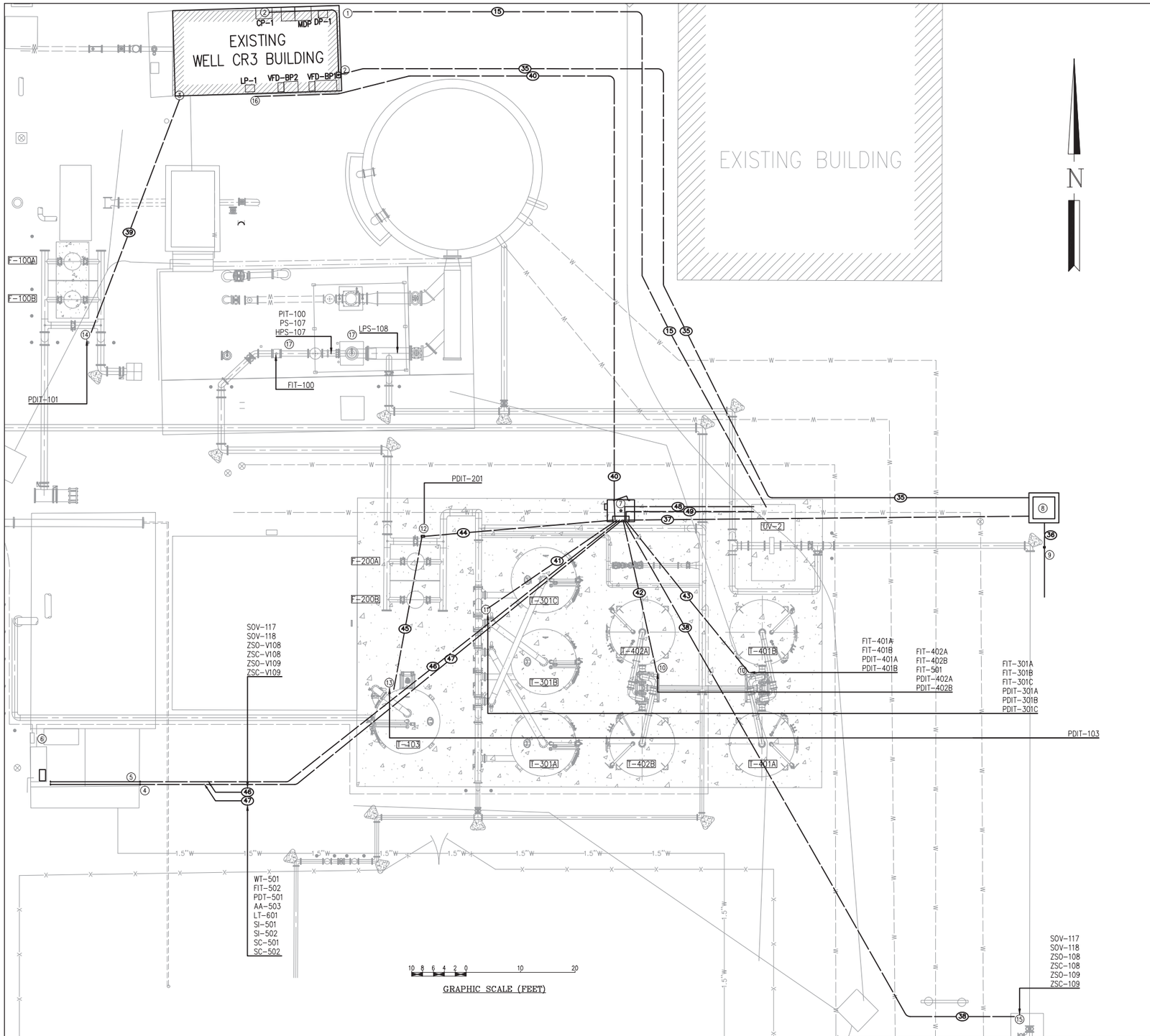

CONSTRUCTION NOTES: (THIS SHEET ONLY)

1. LOCATE EXISTING UNDERGROUND SPARE CONDUIT 15 (3" FROM PANEL MDP) AND EXTEND UNDERGROUND TO LOCATION OF NEW UV-2. STUB CONDUIT INTO LOCATION OF NEW UV-2 CONTROL PANEL.
2. INSTALL NEW CONDUIT 35 UNDER BUILDING FOOTING. CORE DRILL BUILDING SLAB AND EXTEND CONDUIT 35 TO NEW 16" X 16" X 6" SCREW COVER PULL BOX @ ±10' ELEVATION. CONTINUE CONDUIT 35 FROM PULL BOX TO EXISTING CONTROL PANEL CP-1. NOTE: ALL CONDUIT BENDS IN CONDUIT 35 (INDOOR AND UNDERGROUND SHALL HAVE A MINIMUM RADIUS OF 12".
3. INSTALL CONDUIT 39 FROM LOCATION OF BAG FILTERS F100A AND F100B UNDERGROUND TO SOUTHWEST CORNER OF WELL CR-3 BUILDING, EXTENDING TO ±3' ABOVE GRADE. CONDUIT SHALL ENTER BUILDING WITH AN "LB" CONDULET NIPPLED INTO THE BACK OF A NEW 4" SQUARE BOX. CONTINUE CONDUIT INSIDE BUILDING TO EXISTING CONTROL PANEL CP-1.
4. CONDUITS 46 AND 47 SHALL EXIT UNDERGROUND AT EDGE OF EXISTING SLAB. INSTALL "LB" CONDULETS AND CONTINUE CONDUITS TO EXISTING CHLORINE BUILDING.
5. CONDUITS 46 & 47 SHALL ENTER CHLORINE BUILDING @ ±7' ELEVATION AND SHALL TRANSITION TO SCHEDULE 40 PVC CONDUIT. CONTINUE PVC CONDUITS TO NEW DISINFECTION UNIT CONTROL PANEL.
6. EXISTING ELECTRICAL PANEL, PULL BOXES, INSTRUMENTS, ETC. LOCATED ON WEST WALL OF CHLORINE BUILDING SHALL BE RELOCATED AS REQUIRED TO ALLOW INSTALLATION OF NEW DISINFECTION UNIT. ALL RELOCATED EQUIPMENT SHALL BE RECONNECTED AND TESTED FOR PROPER OPERATION. INSTALL NEW 3/4" CONDUIT FROM RELOCATED PANEL TO NEW DISINFECTION UNIT CONTROL PANEL. FURNISH AND INSTALL NEW CIRCUIT BREAKER AND CONDUCTORS AS SPECIFIED BY DISINFECTION EQUIPMENT MANUFACTURER.
7. TERMINATE CONDUIT 40 IN NEW 6" X 6" X 4" SCREW COVER PULL BOX INSIDE NEW REMOTE PLC PANEL CP-2 BUILDING (CP-2 BUILDING IS A SHELTER WORKS 4' X 5' FIBERGLASS BUILDING FURNISHED AND INSTALLED BY OTHERS, REF DWG S-6 FOR BUILDING DETAILS. INSTALL NEW EXPOSED CONDUIT INSIDE BUILDING FROM PULL BOX TO REMOTE PLC PANEL CP-2, BUILDING A/C UNIT AND BUILDING LIGHTING AS REQUIRED. (LIGHTING AND A/C UNIT ARE TO BE FURNISHED AND INSTALLED BY BUILDING MANUFACTURER.
8. FURNISH AND INSTALL NEW 4' X 4' X 3' MANHOLE FOR FIBER OPTIC CABLES. MANHOLE SHALL HAVE HEAVY TRAFFIC RATED GALVANIZED STEEL COVER AND CLOSED BOTTOM WITH A 12" DIAMETER DRAIN OPENING. MANHOLE SHALL BE SET ON AN 8" LAYER OF GRAVEL WITH TOP OF MANHOLE @ ±3" ABOVE FINISH GRADE.
9. INSTALL CONDUIT 36 FROM MANHOLE TO CLOSE PROXIMITY OF WHERE NEW WATER LINE FROM WELL EW-1 TRANSITIONS FROM A NORTHERLY DIRECTION TO A WESTERLY DIRECTION. INSTALL (2) DIRECT BURIAL FIBER OPTIC CABLES ORIGINATING AT NEW WELL EW-1 AND INSTALLED IN TRENCH WITH NEW WATER LINE IN CONDUIT 36, SEAL BOTH ENDS OF CONDUIT 36 WITH AN EPOXY SEAL TO PREVENT RODENTS AND VERMIN FROM ENTERING MANHOLE.
10. (TYPICAL FOR CONDUITS 42 & 43) INSTALL CONDUITS WITH COUPLING FLUSH WITH FINISH CONCRETE. COORDINATE LOCATION OF STUB-UP WITH MECHANICAL AND INSTRUMENTATION CONTRACTORS FOR EXTENSION OF CONDUITS TO FLOW AND PRESSURE TRANSMITTERS ASSOCIATED WITH GAC VESSELS.
11. SIMILAR INSTALLATION OF CONDUIT 41 AS THAT DESCRIBED IN NOTE 10 FOR CONNECTION TO FLOW AND PRESSURE TRANSMITTERS ASSOCIATED WITH IX VESSELS.
12. INSTALL CONDUITS 44 AND 45 WITH COUPLING FLUSH WITH FINISH CONCRETE AND SPACED FOR EXTENSION TO A TWO GANG CAST JUNCTION BOX (CROUSE HINDS FSD-222 WITH S1002 CAST COVER). INSTALL 1/2" CONDUIT FROM BOX TO PRESSURE TRANSMITTER. FINAL CONNECTION TO TRANSMITTER SHALL BE ACCOMPLISHED WITH METALLIC SEALTITE FLEXIBLE CONDUIT AND APPROVED CONNECTORS.
13. INSTALL CONDUIT 45 WITH COUPLING FLUSH WITH FINISH CONCRETE. COORDINATE LOCATION OF STUB-UP WITH MECHANICAL AND INSTRUMENTATION CONTRACTORS FOR EXTENSION OF CONDUITS TO FLOW AND PRESSURE TRANSMITTERS ASSOCIATED WITH IX VESSEL. INSTALL SINGLE GANG CAST JUNCTION BOX WITH CAST COVER @ ± 12' ABOVE FINISHED SLAB AND EXTEND 1/2" CONDUIT FROM BOX TO PRESSURE TRANSMITTER. FINAL CONNECTION TO TRANSMITTER SHALL BE ACCOMPLISHED WITH METALLIC SEALTITE FLEXIBLE CONDUIT AND APPROVED CONNECTORS.
14. INSTALL CONDUIT 39 WITH CAST JUNCTION BOX AT ±12" ABOVE GRADE. EXTEND 1/2" CONDUIT FROM BOX TO PRESSURE TRANSMITTER. FINAL CONNECTION TO TRANSMITTER SHALL BE ACCOMPLISHED WITH METALLIC SEALTITE FLEXIBLE CONDUIT AND APPROVED CONNECTORS.
15. INSTALL CONDUIT 38 FROM NEW REMOTE PLC PANEL CP-2 TO NEW WATER LINE VALVES VAULT. USE CONDULETS AND SEALTITE FLEX TO CONNECT (2) CONTROL SOLENOID VALVES AND LIMIT SWITCHES ON (2) CLA VALVES AS REQUIRED.
16. EXTEND NEW CONDUIT 40 FROM BELOW GRADE INTO WELL CR-3 BUILDING AND TERMINATE IN EXISTING 120/208 VOLT PANEL LP-1. FURNISH AND INSTALL NEW CIRCUIT BREAKERS FOR REMOTE PLC PANEL CP-2 CONTROL POWER, REMOTE PLC PANEL BUILDING A/C UNIT AND REMOTE PLC BUILDING LIGHTING. A/C UNIT AND BUILDING LIGHTING TO BE FURNISHED AND PRE-INSTALLED BY BUILDING MANUFACTURER.
17. POWER, CONTROL AND INSTRUMENTATION CONDUITS FOR BP-2 AND RELATED EQUIPMENT ARE EXISTING FROM WELL CR-3 BUILDING. MAKE FINAL CONDUIT CONNECTIONS AND PULL IN WIRES AS REQUIRED.

ELECTRICAL CONSTRUCTION NOTES:

1. UNDER GROUND CONDUIT SHALL BE PVC JACKETED RIGID STEEL CONDUIT, MINIMUM BURIAL DEPTH SHALL BE 24". ALL DAMAGED COATING SHALL BE REPAIRED EMPLOYING MANUFACTURER'S APPROVED PATCH MATERIAL. ALL JOINTS SHALL BE COATED WITH MANUFACTURER'S APPROVED JOINT COMPOUND.
2. ABOVE GRADE OUTDOOR CONDUIT SHALL BE RIGID GALVANIZED STEEL. ALL JOINTS AND TERMINATIONS SHALL BE ACCOMPLISHED BY MEANS OF THREADED JOINTS. THREADLESS FITTINGS ARE NOT ACCEPTABLE AND SHALL NOT BE USED.
3. EXPOSED CONDUIT IN BUILDINGS, EXCEPT WHERE OTHERWISE NOTED MAY BE EMT WITH COMPRESSION FITTINGS.
4. REF. SHEET E-1 FOR GENERAL ELECTRICAL NOTES.
5. REF. SHEET E-21 FOR CONDUIT/WIRE SCHEDULE.

REV	DATE	REVISION	APPR'D	REV BY
–	2/28/14	SUBMITTAL TO SCE		

E8046
EXP. 9-30-14

JIM RUBINO
AUTOMATION & CONTROL SYSTEM DESIGN

4821 Burgundy Road
Woodland Hills, CA 91364
Tel (818) 225-7680
Fax (818) 225-7681
www.logicontrol.com

ERM

GROUNDWATER EXTRACTION AND TREATMENT SYSTEM COMBINED REMEDY SOURCE AREA OPERABLE UNIT, ROCKETS, FIREWORKS, AND FLARES SUPERFUND SITE

REV

SCALE	DESIGNED BY	DRAWN BY	DRAWING NUMBER
AS SHOWN	JR/GV	JR/GV	
DATE	CHECKED	APPROVED	JOB NUMBER
FEB 2014	GV		2013175.00

SHEET 70

TREATMENT PLANT ELECTRICAL CONDUIT PLAN

DISCIPLINE NO. E-11

ENVIRONMENTAL RESOURCES MANAGEMENT

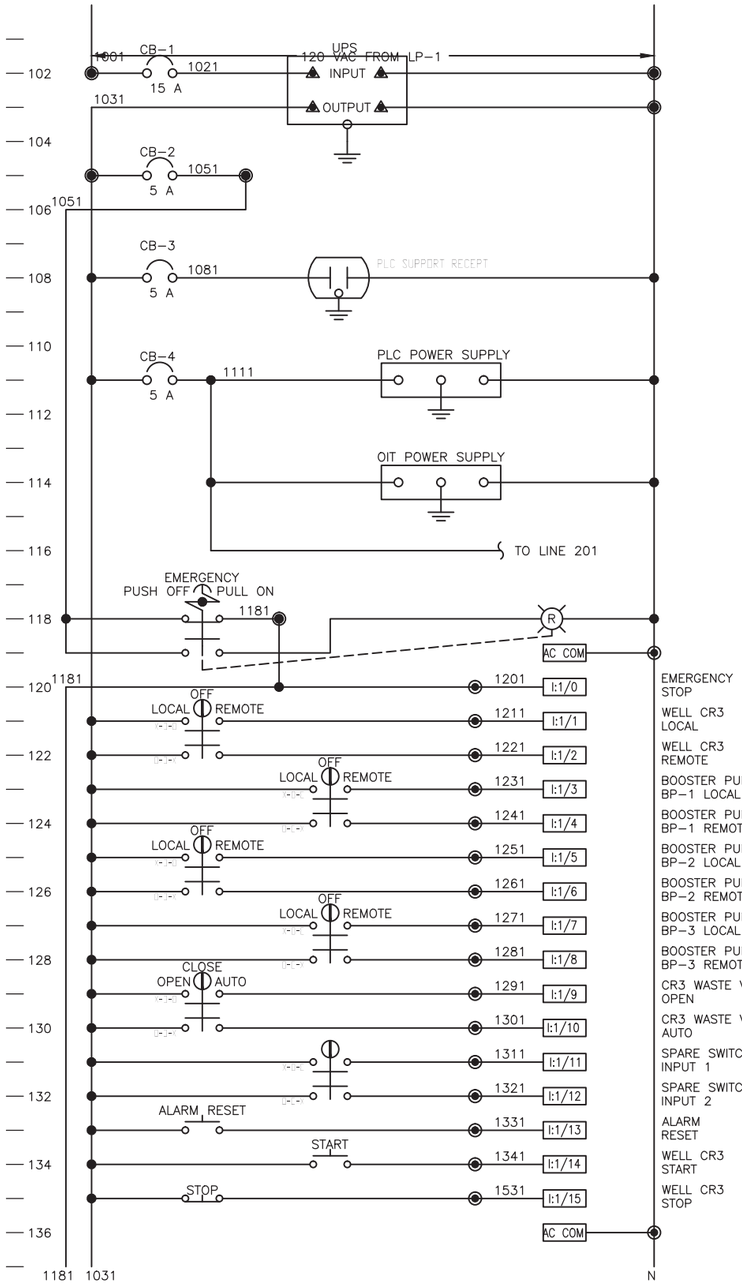

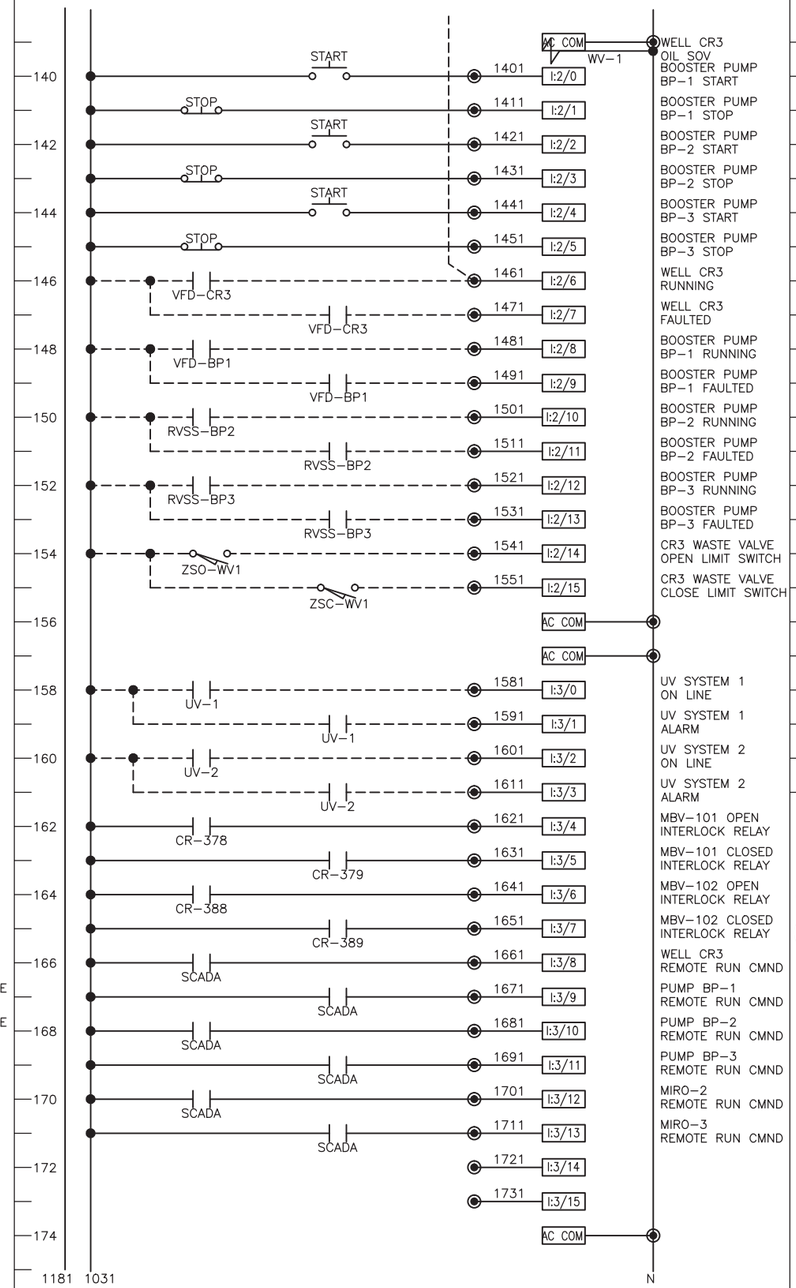

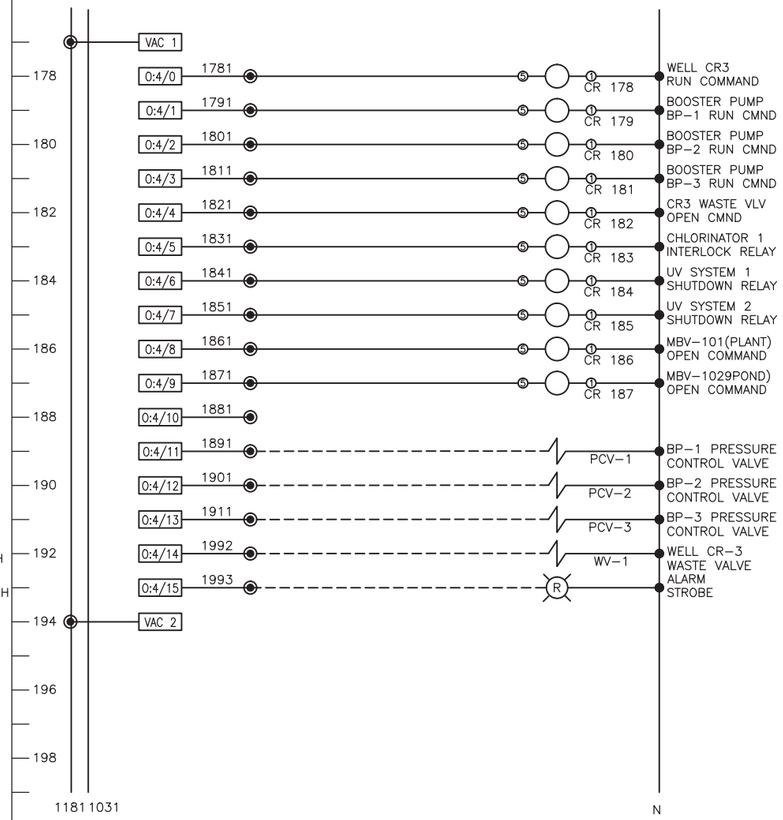

NOTES
1. PLC IP ADDRESS: 192.168.1.2
2. OIT IP ADDRESS: 192.168.1.3
3. EW-1 CP ADDRESS: 192.168.1.4 △7
4. REMOTE CP-2 ADDRESS: 192.168.1.5 △7
5. BP-2 VFD ADDRESS: 192.168.1.6 △7
6. SUBNET ADDR: 255.255.255.0
7. MBV-101: MIRO WELLS FLOW TO TANK
8. MBV-102: MIRO WELLS FLOW TO POND

WIRE COLOR CODE

120 VAC	RED
120 NEUTRAL	WHITE
GROUND	GREEN
24 VDC	BLUE
INTERLOCK	YELLOW
SHLD CABLE +	WHITE
SHLD CABLE –	BLACK

LEGEND
- WIRES CONNECTED
- WIRES CROSSING (NO CONNECTION)
- CONTROL PANEL INTERNAL WIRING
- FIELD WIRING
- CP-1 TERMINAL
- GROUND CONNECTION

THIS DRAWING IS FOR REFERENCE ONLY. ALL WIRING IS EXISTING.
△7 ADDED IP ADDRESSES 192.168.1.4, 192.168.1.5, 192.168.1.6

REV	DATE	REVISION	APPR'D	REV BY
–	2/28/14	SUBMITTAL TO SCE		

E8046 EXP. 9-30-14

JIM RUBINO
AUTOMATION & CONTROL SYSTEM DESIGN
4821 Burgundy Road
Woodland Hills, CA 91364
Tel (818) 225-7680
Fax (818) 225-7681
www.logicontrol.com

ERM

GROUNDWATER EXTRACTION AND TREATMENT SYSTEM COMBINED REMEDY SOURCE AREA OPERABLE UNIT, ROCKETS, FIREWORKS, AND FLARES SUPERFUND SITE

SCALE	DESIGNED BY	DRAWN BY	DRAWING NUMBER
AS SHOWN	JR/GV	JR/GV	
DATE FEB 2014	CHECKED GV	APPROVED	JOB NUMBER 2013175.00

SHEET 71

TREATMENT PLANT ELECTRICAL WIRING DIAGRAM PART 1

DISCIPLINE NO. E-12

ENVIRONMENTAL RESOURCES MANAGEMENT

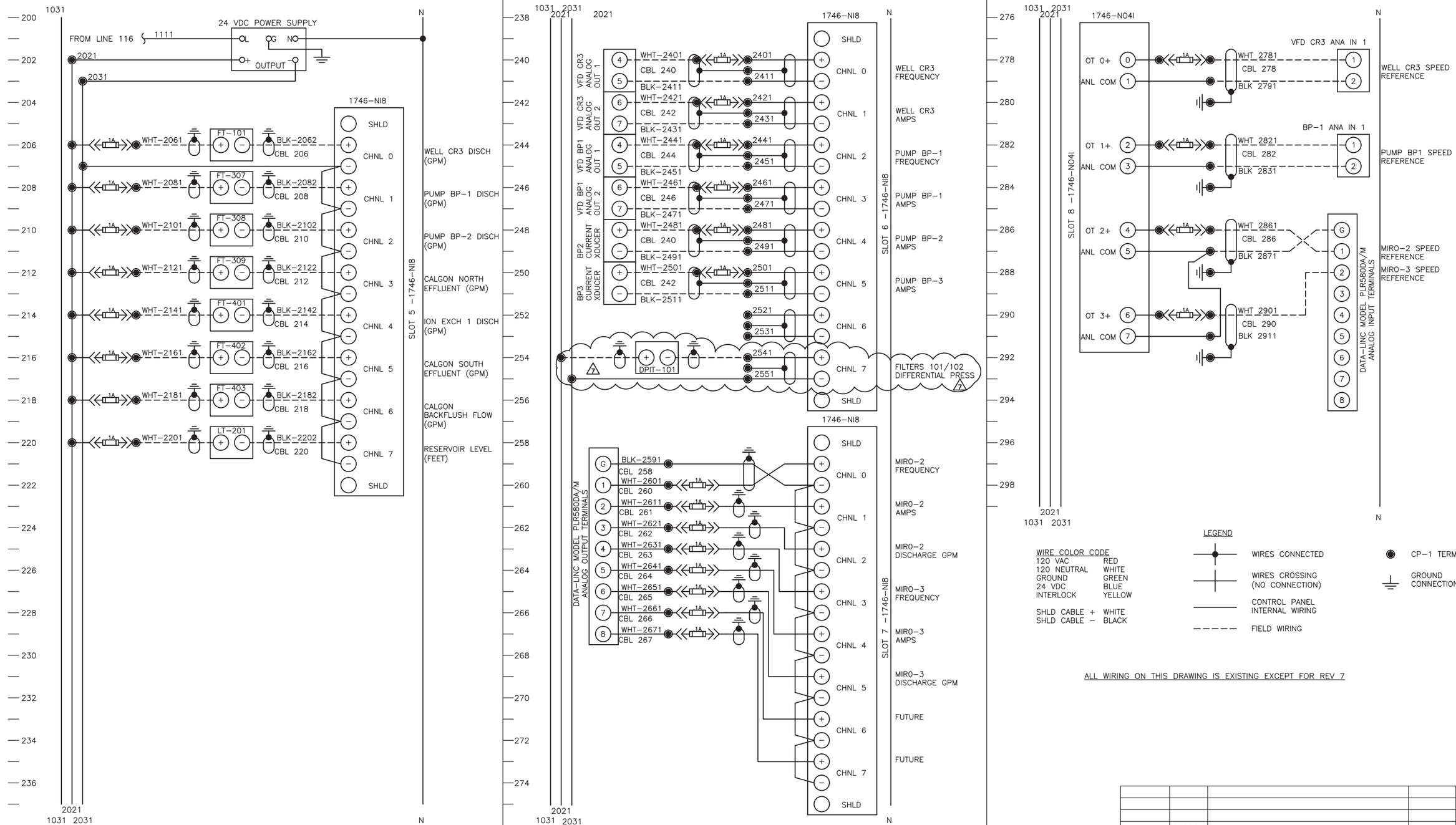

WIRE COLOR CODE

120 VAC	RED
120 NEUTRAL	WHITE
GROUND	GREEN
24 VDC	BLUE
INTERLOCK	YELLOW
SHLD CABLE +	WHITE
SHLD CABLE –	BLACK

LEGEND

- WIRES CONNECTED
- WIRES CROSSING (NO CONNECTION)
- CONTROL PANEL INTERNAL WIRING
- FIELD WIRING
- CP-1 TERMINAL
- GROUND CONNECTION

ALL WIRING ON THIS DRAWING IS EXISTING EXCEPT FOR REV 7

REV	DATE	REVISION	APPR'D	REV BY
–	2/28/14	SUBMITTAL TO SCE		

E8046 EXP. 9-30-14

JIM RUBINO
AUTOMATION & CONTROL SYSTEM DESIGN

4821 Burgundy Road
Woodland Hills, CA 91364
Tel (818) 225-7680
Fax (818) 225-7681
www.logicontrol.com

ERM

GROUNDWATER EXTRACTION AND TREATMENT SYSTEM COMBINED REMEDY SOURCE AREA OPERABLE UNIT, ROCKETS, FIREWORKS, AND FLARES SUPERFUND SITE

SCALE	DESIGNED BY	DRAWN BY	DRAWING NUMBER
AS SHOWN	JR/GV	JR/GV	
DATE	CHECKED	APPROVED	JOB NUMBER
FEB 2014	GV		2013175.00

REV

SHEET 72

TREATMENT PLANT ELECTRICAL
WIRING DIAGRAM PART 2

DISCIPLINE NO. E-13

ENVIRONMENTAL RESOURCES MANAGEMENT

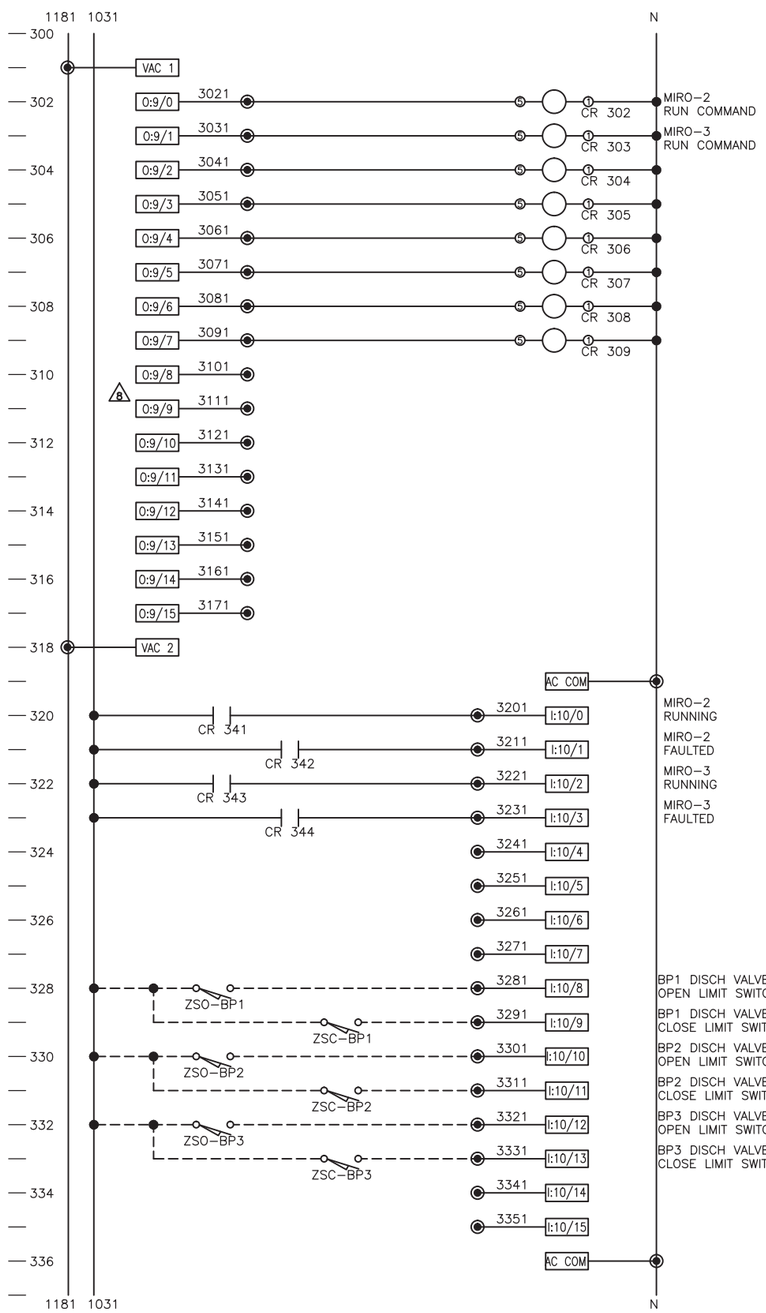

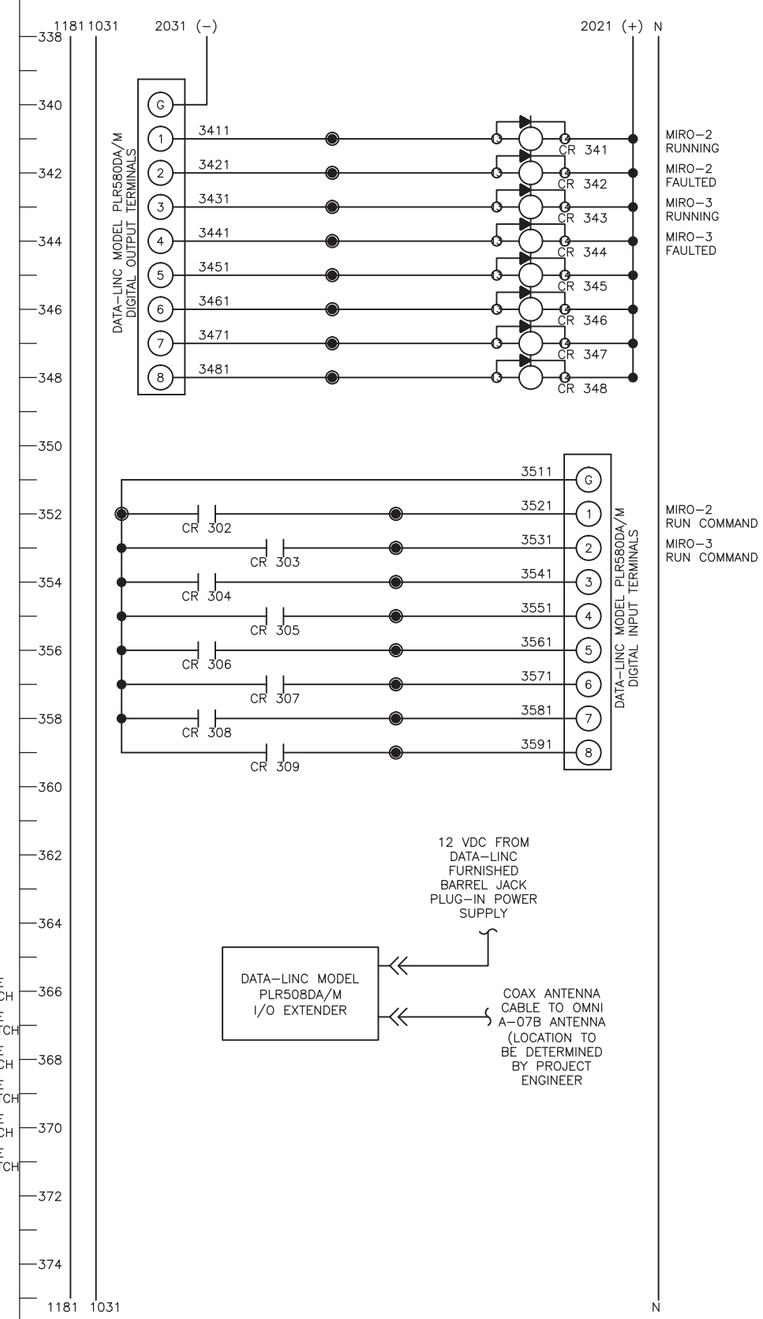

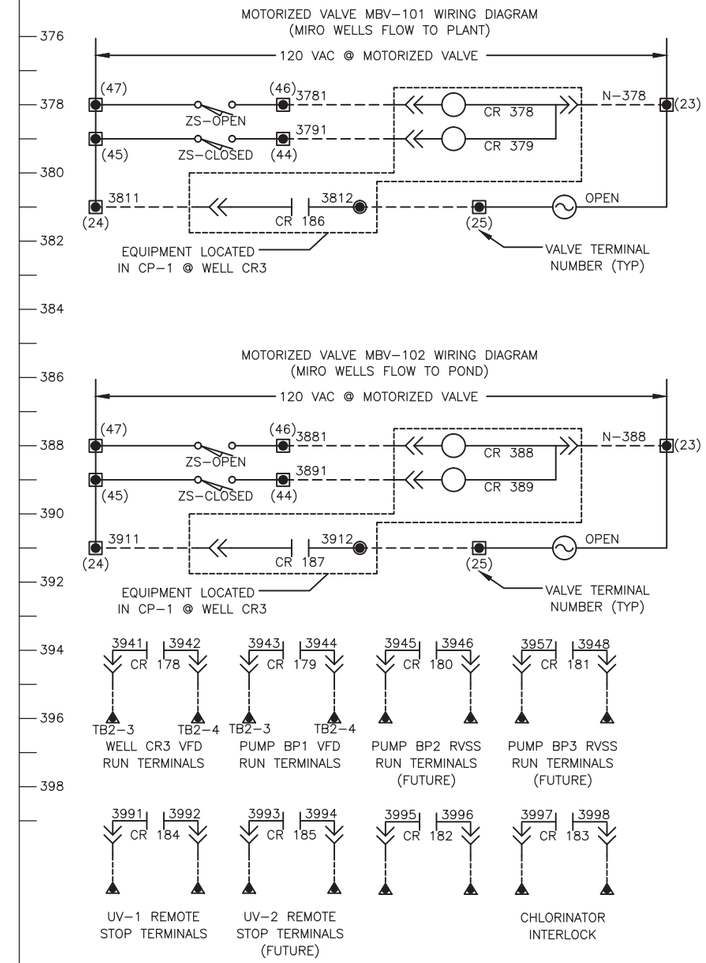

LEGEND

WIRE COLOR CODE

120 VAC	RED
120 NEUTRAL	WHITE
GROUND	GREEN
24 VDC	BLUE
INTERLOCK	YELLOW
SHLD CABLE +	WHITE
SHLD CABLE –	BLACK

- WIRES CONNECTED
- WIRES CROSSING (NO CONNECTION)
- CONTROL PANEL INTERNAL WIRING
- FIELD WIRING
- CP-1 TERMINAL
- GROUND CONNECTION

ALL WIRING ON THIS DRAWING IS EXISTING EXCEPT FOR REV 8

REV	DATE	REVISION	APPR'D	REV BY
–	2/28/14	SUBMITTAL TO SCE		

E8046 EXP. 9-30-14

JIM RUBINO
AUTOMATION & CONTROL SYSTEM DESIGN

4821 Burgundy Road
Woodland Hills, CA 91364
Tel (818) 225-7680
Fax (818) 225-7681
www.logicontrol.com

ERM

GROUNDWATER EXTRACTION AND TREATMENT SYSTEM COMBINED REMEDY SOURCE AREA OPERABLE UNIT, ROCKETS, FIREWORKS, AND FLARES SUPERFUND SITE

SCALE	DESIGNED BY	DRAWN BY	DRAWING NUMBER
AS SHOWN	JR/GV	JR/GV	
DATE FEB 2014	CHECKED GV	APPROVED	JOB NUMBER 2013175.00

REV

SHEET 73

TREATMENT PLANT ELECTRICAL WIRING DIAGRAM PART 3

DISCIPLINE NO. E-14

ENVIRONMENTAL RESOURCES MANAGEMENT

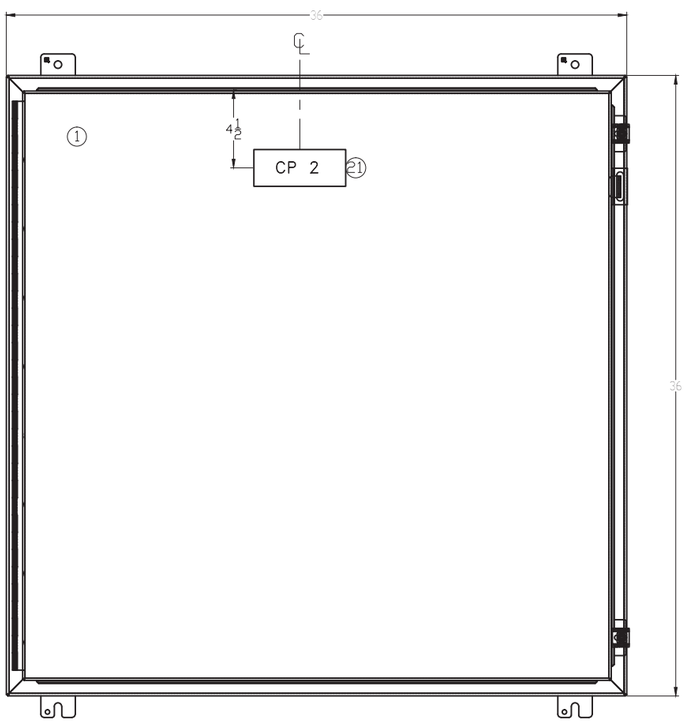

EXTERIOR ELEVATION 1 / –
NOT TO SCALE

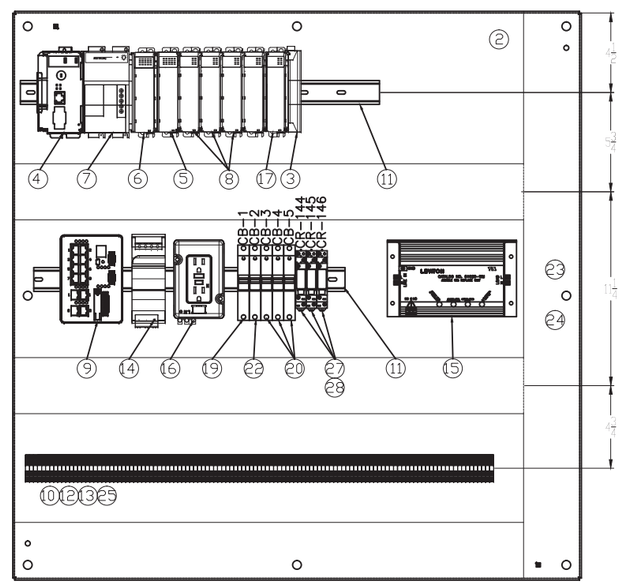

INTERIOR ELEVATION 2 / –
NOT TO SCALE

BILL OF MATERIAL

No.	DESCRIPTION	MANUFACTURER	CATALOG No.	QTY
1	ENCLOSURE	HOFFMAN ENG.	A363608LP	1
2	PANEL	HOFFMAN ENG.	A36P36	1
3	RIGHT END TERMINATOR	ROCKWELL AUTOMATION	1769–ECR	1
4	COMPACT LOGIX CPU	ROCKWELL AUTOMATION	1769–L35E	1
5	DIGITAL OUTPUT MODULE	ROCKWELL AUTOMATION	1769–OW16	1
6	DIGITAL INPUT MODULE	ROCKWELL AUTOMATION	1769–IA16	1
7	PLC POWER SUPPLY	ROCKWELL AUTOMATION	1769–PA4	1
8	ANALOG INPUT MODULE	ROCKWELL AUTOMATION	1763–IF8	4
9	8 CU/2 FO ENET SW	ROCKWELL AUTOMATION	1783–BMS10CL	1
10	TERMINAL BLOCK	ROCKWELL AUTOMATION	1492–H1	100
11	DIN RAIL	ROCKWELL AUTOMATION	199–DR1	1
12	END BARRIER	ROCKWELL AUTOMATION	1492–N36	1
13	END ANCHOR	ROCKWELL AUTOMATION	1492–N47	2
14	24VDC PWR SUPPLY 2.5A	ROCKWELL AUTOMATION	1606–XL60D	1
15	TVSS–120VAC	LEVITON	51020WM	1
16	120V DIN RAIL RECEPT	ROCKWELL AUTOMATION	1492–REC15	1
17	ANALOG OUTPUT MODULE	ROCKWELL AUTOMATION	1763–OF8C	1
18				
19	10 AMP CIR BREAKER	ROCKWELL AUTOMATION	1489–MIC100	1
20	2 AMP CIR BREAKER	ROCKWELL AUTOMATION	1489–MIC020	3
21	NAMEPLATE	CUSTOM 5" X 2'	WHT W/BLK LETTERS	1
22	5 AMP CIR BREAKER	ROCKWELL AUTOMATION	1489–MIC050	1
23	3" X 3" WIREWAY	PANDUIT	E3X3W6	2
24	3" WIREWAY COVER	PANDUIT	C3W6	2
25	TERM MOUNTING RAIL	ROCKWELL AUTOMATION	1492–N22	1
26				
27	SPDT RELAY–120VAC	ROCKWELL AUTOMATION	700–HK36A1	3
28	RELAY SOCKET	ROCKWELL AUTOMATION	700–HN121	3
29				
30				

BILL OF MATERIALS 3 / –

REV	DATE	REVISION	APPR'D	REV BY
–	2/28/14	SUBMITTAL TO SCE		

E8046
EXP. 9-30-14

JIM RUBINO
AUTOMATION & CONTROL SYSTEM DESIGN

4821 Burgundy Road
Woodland Hills, CA 91364
Tel (818) 225-7680
Fax (818) 225-7681
www.logicontrol.com

ERM

GROUNDWATER EXTRACTION AND TREATMENT SYSTEM COMBINED REMEDY SOURCE AREA OPERABLE UNIT, ROCKETS, FIREWORKS, AND FLARES SUPERFUND SITE

REV

SCALE	DESIGNED BY	DRAWN BY	DRAWING NUMBER
AS SHOWN	JR/GV	JR/GV	
DATE FEB 2014	CHECKED GV	APPROVED	JOB NUMBER 2013175.00

SHEET 74

TREATMENT PLANT REMOTE
CONTROL PANEL LAYOUT

DISCIPLINE NO. E-15

ENVIRONMENTAL RESOURCES MANAGEMENT

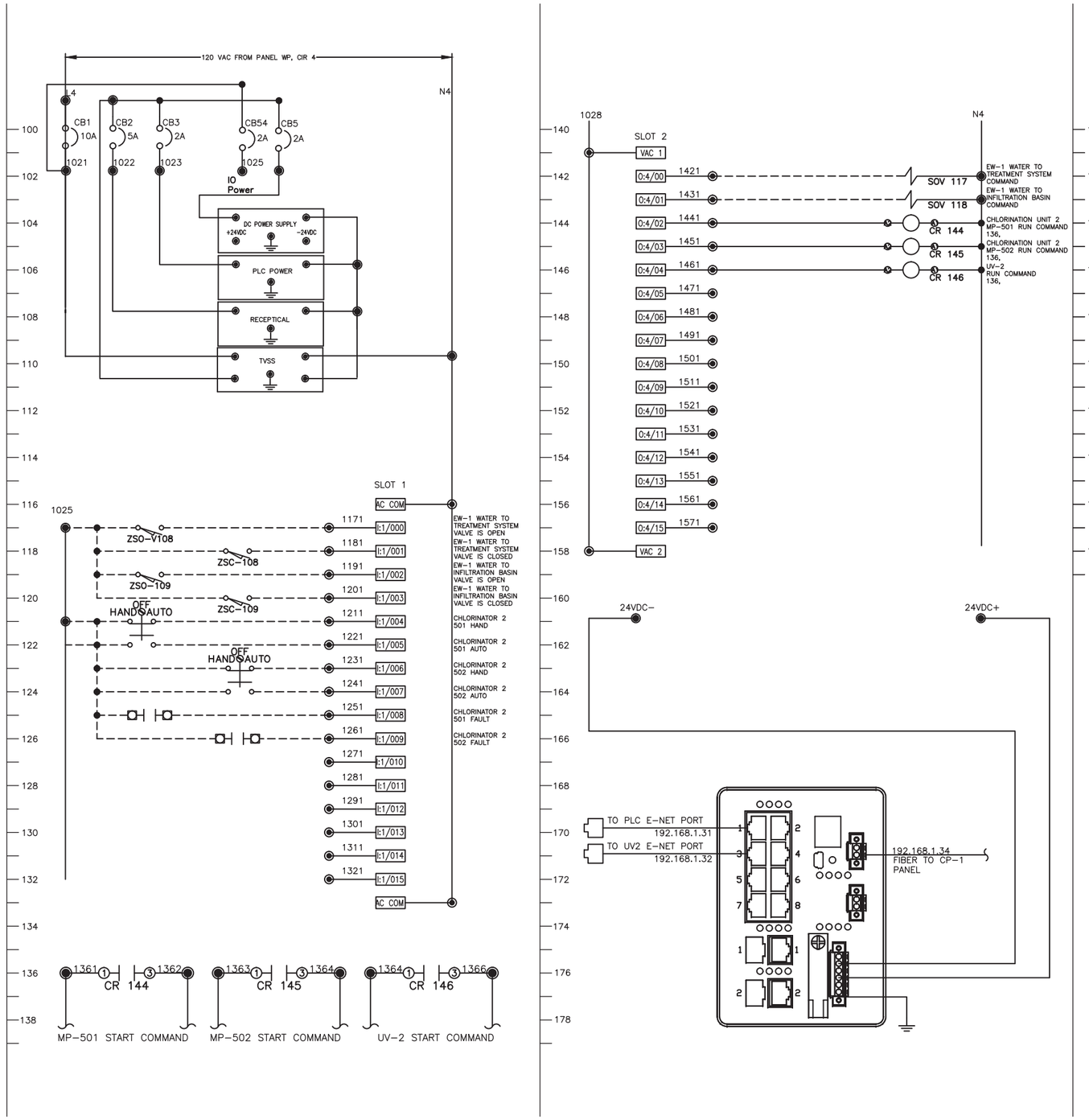

REV	DATE	REVISION	APPR'D	REV BY
–	2/28/14	SUBMITTAL TO SCE		

GROUNDWATER EXTRACTION AND TREATMENT SYSTEM COMBINED REMEDY SOURCE AREA OPERABLE UNIT, ROCKETS, FIREWORKS, AND FLARES SUPERFUND SITE

REV

SCALE	AS SHOWN	DESIGNED BY	JR/GV	DRAWN BY	JR/GV	DRAWING NUMBER	SHEET
DATE	FEB 2014	CHECKED	GV	APPROVED		JOB NUMBER 2013175.00	75

TREATMENT PLANT REMOTE CONTROL WIRING DIAGRAM PART 1

DISCIPLINE NO. E-16

ENVIRONMENTAL RESOURCES MANAGEMENT

E8046 EXP. 9-30-14

JIM RUBINO
AUTOMATION & CONTROL SYSTEM DESIGN

4821 Burgundy Road
Woodland Hills, CA 91364
Tel (818) 225-7680
Fax (818) 225-7681
www.logicontrol.com

ERM

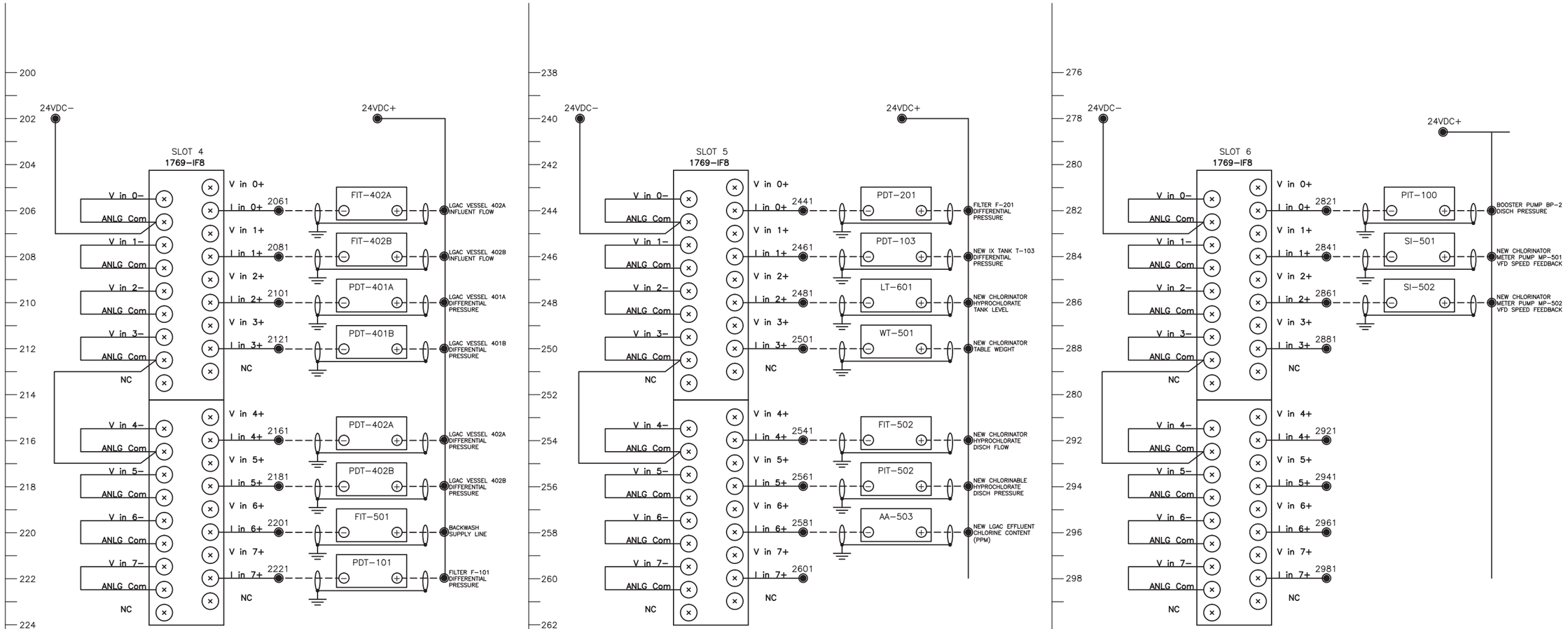

REV	DATE	REVISION	APPR'D	REV BY
–	2/28/14	SUBMITTAL TO SCE		

E8046
EXP. 9-30-14

JIM RUBINO
AUTOMATION & CONTROL SYSTEM DESIGN

4821 Burgundy Road
Woodland Hills, CA 91364
Tel (818) 225-7680
Fax (818) 225-7681
www.logicontrol.com

ERM

GROUNDWATER EXTRACTION AND TREATMENT SYSTEM COMBINED REMEDY SOURCE AREA OPERABLE UNIT, ROCKETS, FIREWORKS, AND FLARES SUPERFUND SITE

SCALE	DESIGNED BY	DRAWN BY	DRAWING NUMBER
AS SHOWN	JR/GV	JR/GV	
DATE	CHECKED	APPROVED	JOB NUMBER
FEB 2014	GV		2013175.00

REV

SHEET 76

TREATMENT PLANT REMOTE CONTROL WIRING DIAGRAM PART 2

DISCIPLINE NO. E-17

ENVIRONMENTAL RESOURCES MANAGEMENT

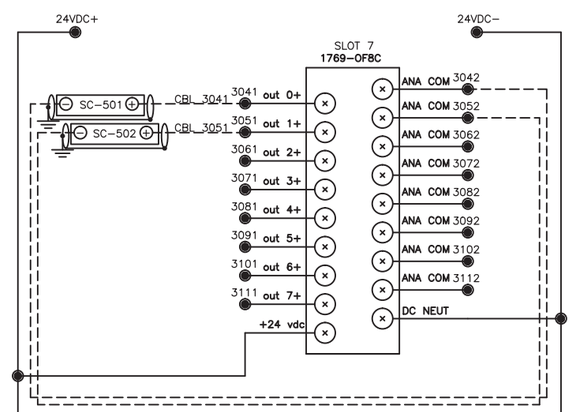

SLOT 7 IO ASSIGNMENTS

CHANNEL 0	CHLORINATOR 2 METER PUMP 1 SPEED REFERENCE
CHANNEL 1	CHLORINATOR 2 METER PUMP 2 SPEED REFERENCE
CHANNEL 2	
CHANNEL 3	
CHANNEL 4	
CHANNEL 5	
CHANNEL 6	
CHANNEL 7	

REV	DATE	REVISION	APPR'D	REV BY
–	2/28/14	SUBMITTAL TO SCE		

E8046
EXP. 9-30-14

JIM RUBINO
AUTOMATION & CONTROL SYSTEM DESIGN

4821 Burgundy Road
Woodland Hills, CA 91364
Tel (818) 225-7680
Fax (818) 225-7681
www.logicontrol.com

ERM

GROUNDWATER EXTRACTION AND TREATMENT SYSTEM COMBINED REMEDY SOURCE AREA OPERABLE UNIT, ROCKETS, FIREWORKS, AND FLARES SUPERFUND SITE

REV

SCALE	DESIGNED BY	DRAWN BY	DRAWING NUMBER
AS SHOWN	JR/GV	JR/GV	
DATE	CHECKED	APPROVED	JOB NUMBER
FEB 2014	GV		2013175.00

SHEET 77

TREATMENT PLANT REMOTE
CONTROL WIRING DIAGRAM PART 3

DISCIPLINE NO. E-18

ENVIRONMENTAL RESOURCES MANAGEMENT

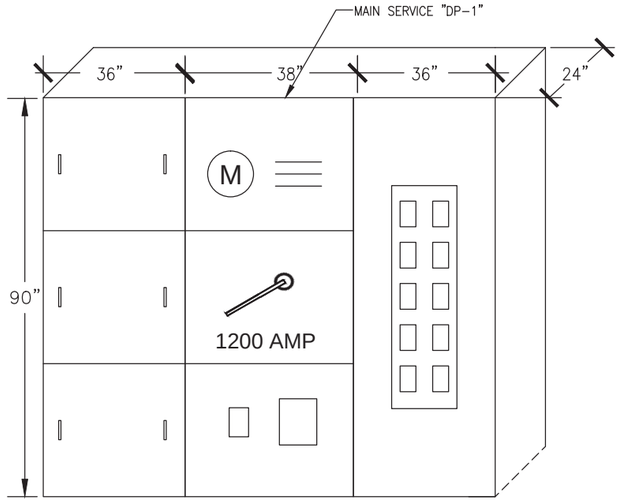

EW-1 WELL SITE MAIN SERVICE ELEVATION (2/–)
NOT TO SCALE

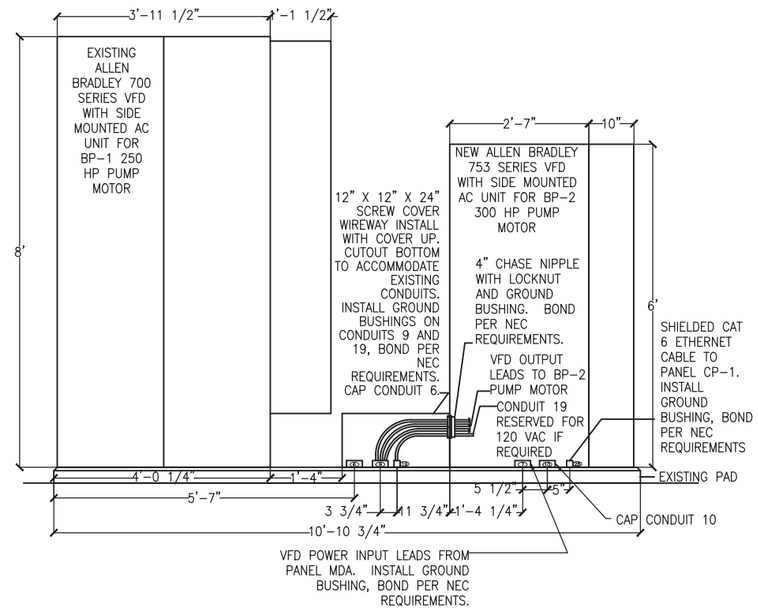

FRONT ELEVATION BP-2 VFD INSTALLATION (1/–)
NOT TO SCALE

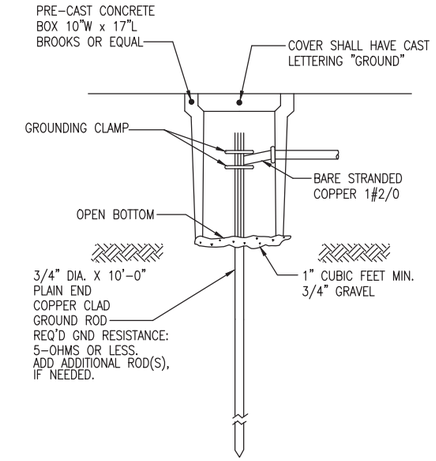

GROUND DETAIL (5/–)
NOT TO SCALE

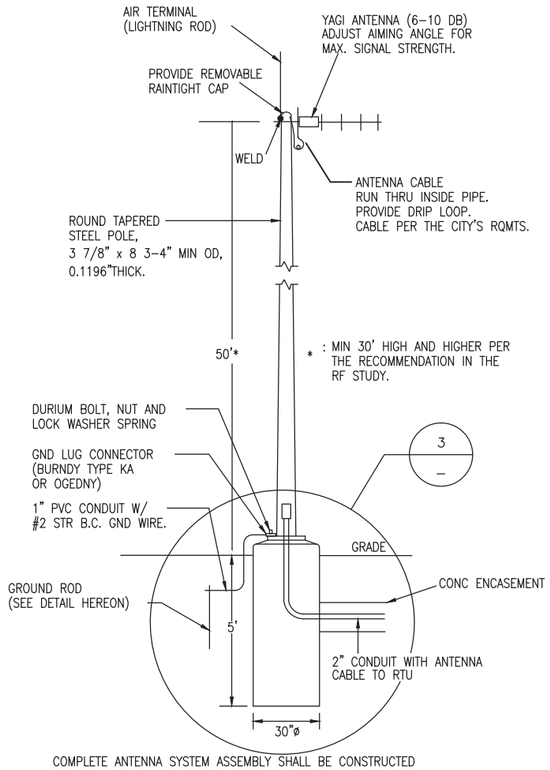

COMPLETE ANTENNA SYSTEM ASSEMBLY SHALL BE CONSTRUCTED FOR MIN. 120MPH WIND LOAD.

ANTENNA DETAIL (4/–)
NOT TO SCALE

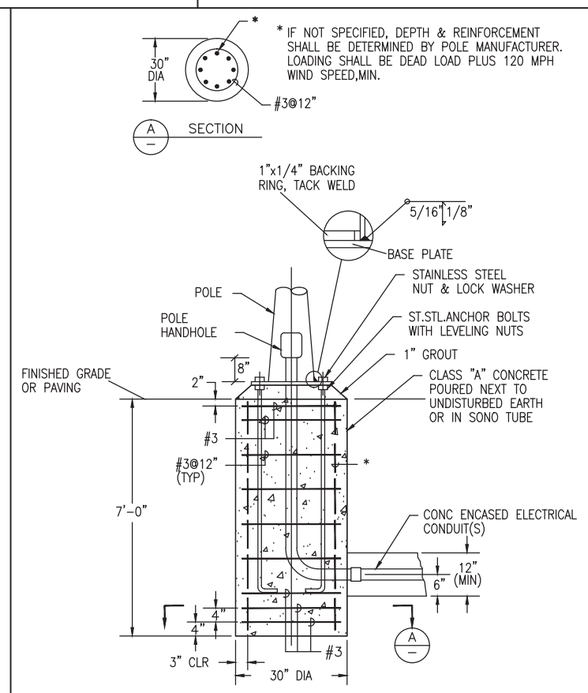

CAST-IN-DRILLED HOLE PILE FOUNDATION.

ANTENNA BASE DETAIL (3/–)
NOT TO SCALE

REV	DATE	REVISION	APPR'D	REV BY
–	2/28/14	SUBMITTAL TO SCE		

E8046 EXP. 9-30-14

JIM RUBINO
AUTOMATION & CONTROL SYSTEM DESIGN

4821 Burgundy Road
Woodland Hills, CA 91364
Tel (818) 225-7680
Fax (818) 225-7681
www.logicontrol.com

ERM

GROUNDWATER EXTRACTION AND TREATMENT SYSTEM COMBINED REMEDY SOURCE AREA OPERABLE UNIT, ROCKETS, FIREWORKS, AND FLARES SUPERFUND SITE

SCALE	DESIGNED BY	DRAWN BY	DRAWING NUMBER
AS SHOWN	JR/GV	JR/GV	
DATE	CHECKED	APPROVED	JOB NUMBER
FEB 2014	GV		2013175.00

ELECTRICAL DETAILS

REV

SHEET 78

DISCIPLINE NO. E-19

ENVIRONMENTAL RESOURCES MANAGEMENT

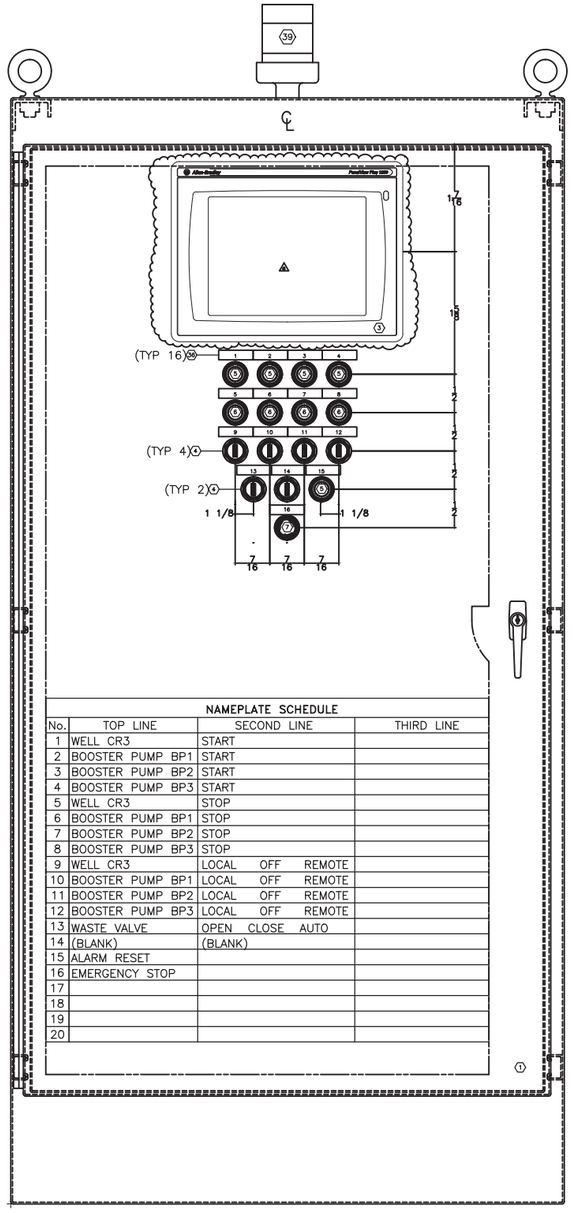

NAMEPLATE SCHEDULE			
No.	TOP LINE	SECOND LINE	THIRD LINE
1	WELL CR3	START	
2	BOOSTER PUMP BP1	START	
3	BOOSTER PUMP BP2	START	
4	BOOSTER PUMP BP3	START	
5	WELL CR3	STOP	
6	BOOSTER PUMP BP1	STOP	
7	BOOSTER PUMP BP2	STOP	
8	BOOSTER PUMP BP3	STOP	
9	WELL CR3	LOCAL OFF REMOTE	
10	BOOSTER PUMP BP1	LOCAL OFF REMOTE	
11	BOOSTER PUMP BP2	LOCAL OFF REMOTE	
12	BOOSTER PUMP BP3	LOCAL OFF REMOTE	
13	WASTE VALVE	OPEN CLOSE AUTO	
14	(BLANK)	(BLANK)	
15	ALARM RESET		
16	EMERGENCY STOP		
17			
18			
19			
20			

EXTERIOR ELEVATION 1
NOT TO SCALE

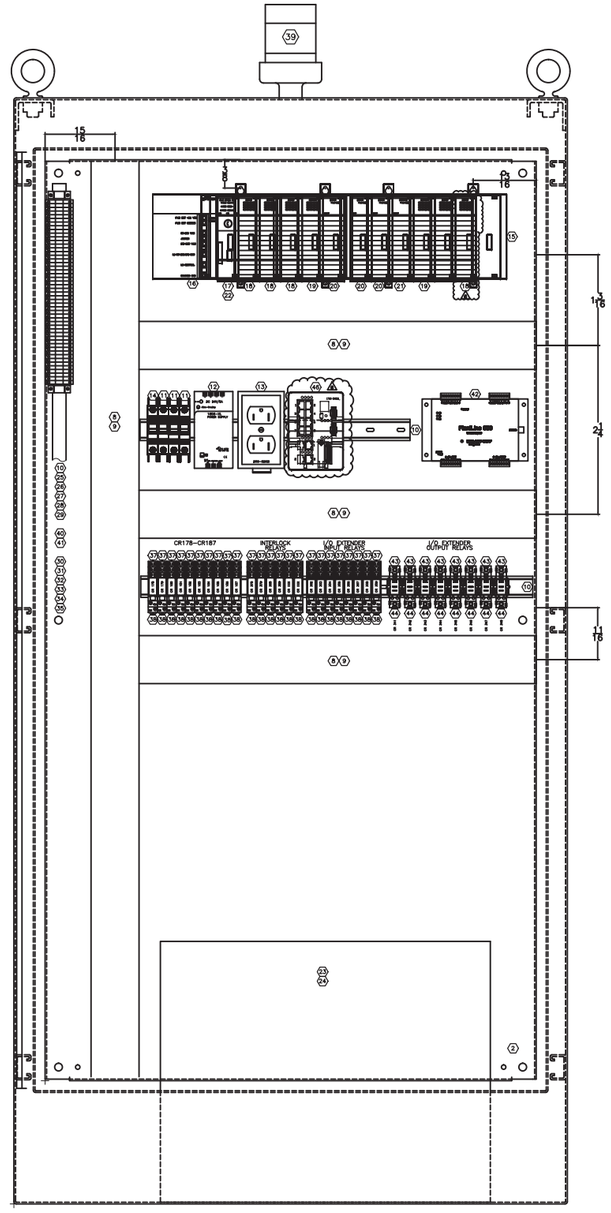

INTERIOR ELEVATION 2
NOT TO SCALE

BILL OF MATERIAL				
	No.	DESCRIPTION	MANUFACTURER	CATALOG No.	QTY
	1	ENCLOSURE	HOFFMAN ENG.	A–723624FS	1
	2	PANEL	HOFFMAN ENG.	A–72P36F1	1
6	3	OPERATOR INTERFACE	ALLEN BRADLEY	2711–T12C4A8CP	1
	4	3 POS SELECTOR SWTCH	ALLEN BRADLEY	800T–J2A	6
	5	BLACK PUSHBUTTON	ALLEN BRADLEY	800T–A2D1	5
	6	RED PUSHBUTTON	ALLEN BRADLEY	800T–B6D2	4
	7	EMERGENCY STOP	ALLEN BRADLEY	800T–FXTPH16R	1
	8	WIREWAY	PANDUIT	E3X3W6	12'
	9	WIREWAY COVER	PANDUIT	C3W6	12'
	10	DIN RAIL	ALLEN BRADLEY	199–DR1	3
	11	CIRCUIT BREAKER	ALLEN BRADLEY	1489–A1C050	3
	12	24 VDC POWER SUPPLY	ALLEN BRADLEY	1606–XL120D	1
	13	DIN RAIL RECEPTACLE	ACME	DRG5262I	1
	14	CIRCUIT BREAKER	ALLEN BRADLEY	1489–A1C150	1
	15	PLC CHASSIS	ALLEN BRADLEY	1746–A13	1
	16	PLC POWER SUPPLY	ALLEN BRADLEY	1746–P4	1
	17	PLC PROCESSOR	ALLEN BRADLEY	1747–L552	1
6	18	DIGITAL INPUT MODULE	ALLEN BRADLEY	1746–IA16	5
	19	DIGITAL OUTPUT MODULE	ALLEN BRADLEY	1746–OW16	2
	20	ANALOG INPUT MODULE	ALLEN BRADLEY	1746–NI8	3
	21	ANALOG OUTPUT MODULE	ALLEN BRADLEY	1746–NO4I	1
	22	PLC EEPROM MEMORY	ALLEN BRADLEY	1747–M13	1
	23	INDUSTRIAL UPS	SOLA	S4K2U1000	1
	24	EXTERNAL BATTERY	SOLA	S4K2U48BAT	1
	25	DIGITAL TERMINAL	ALLEN BRADLEY	1492–HM1	100
	26	DIGITAL END ANCHOR	ALLEN BRADLEY	1492–N23	4
	27	DIGITAL END BARRIER	ALLEN BRADLEY	1492–NM36	1
	28	TERMINAL JUMPER	ALLEN BRADLEY	1492–N39	1
	29	STANDOFF BRACKET	ALLEN BRADLEY	1492–N25	6
*	30	ANALOG TERMINAL	ALLEN BRADLEY	1492–JDG3PTP	50
*	31	ANALOG END BARRIER	ALLEN BRADLEY	1492–EBJD3P	1
*	32	ANALOG END ANCHOR	ALLEN BRADLEY	1492–ERL35	2
*	33	ANALOG MARKING SYSTEM	ALLEN BRADLEY	1492–SM5X10	1
*	34	FUSE PLUG	ALLEN BRADLEY	1492–FPK2	50
*	35	.1 AMP FUSE	LITTLE FUSE	217.100	50
	36	ENGRAVED NAMEPLATE	CUSTOM 2 1/4" X 5/8"	WHT W/BLK LETTERS	16
	37	RELAY SOCKET	ALLEN BRADLEY	700–HN121	24
	38	RELAY	ALLEN BRADLEY	700–HK36A1–3–4	24
	39	ALARM STROBE	EDWARDS	1058STR–NS	1
*	40	DISCONNECT TERMINAL	ALLEN BRADLEY	1492–H7	30
*	41	DISCONN. END BARRIER	ALLEN BRADLEY	1492–N37	1
	42	WIRELESS I/O EXTENDER	DATA–LINC	PLR580DA/M	1
	43	24VDC 1 POLE RELAY	IDEC	RH1B–UL–24VDC	8
	44	RELAY SOCKET	IDEC	SH1B–05	8
**	45	OMNI DIRECTIONAL ANTENNA	DATA–LINC	OMNI A–07B	1
6	46	5 PORT E–NET SWITCH	ALLEN BRADLEY	1783–BMS10	1

* DIGITAL TERMINALS AT THE TOP, ANALOG TERMINALS AT THE BOTTOM.
** NOT SHOWN, EXTERNALLY MOUNTED.

6

REVISION 6 MODIFICATIONS:

1. REPLACE EXISTING ALLEN BRADLEY 1783–US05T ETHERNET SWITCH WITH NEW ALLEN BRADLEY 1783–BMS10 COMBINATION COPPER/FIBER ETHERNET SWITCH.
2. REPLACE EXISTING ALLEN BRADLEY 2711P–B10C4A1 PANEL VIEW + OPERATOR INTERFACE TERMINAL (OIT) WITH NEW ALLEN BRADLEY 2711–T12C4A8 PANEL VIEW PLUS 6 OPERATOR INTERFACE TERMINAL (OIT). CONTRACTOR TO FURNISH ADAPTOR PLATE AS REQUIRED TO RETROFIT THE NEW OIT TO THE CONTROL PANEL. PROGRAMMING OF THE NEW OIT IS TO BE DONE BY OTHERS AND IS NOT PART OF THIS CONTRACT.
3. INSTALL NEW 1746–1A16 DIGITAL INPUT MODULE IN SLOT 11, CONNECT ALL INPUTS TO TERMINAL STRIP, ADD TERMINALS IF REQUIRED.
4. REMOVED HARDWARE IS TO BE TURNED OVER TO THE PROJECT ENGINEER.

REV	DATE	REVISION	APPR'D	REV BY
–	2/28/14	SUBMITTAL TO SCE		

E8046
EXP. 9–30–14

JIM RUBINO
AUTOMATION & CONTROL SYSTEM DESIGN
4821 Burgundy Road
Woodland Hills, CA 91364
Tel (818) 225–7680
Fax (818) 225–7681
www.logicontrol.com

ERM

GROUNDWATER EXTRACTION AND TREATMENT SYSTEM COMBINED REMEDY SOURCE AREA OPERABLE UNIT, ROCKETS, FIREWORKS, AND FLARES SUPERFUND SITE

REV

SCALE	DESIGNED BY	DRAWN BY	DRAWING NUMBER
AS SHOWN	JR/GV	JR/GV	
DATE	CHECKED	APPROVED	JOB NUMBER
FEB 2014	GV		2013175.00

SHEET 79

TREATMENT PLANT EXISTING PLC
LAYOUT & BILL OF MATERIAL

DISCIPLINE NO. E-20

ENVIRONMENTAL RESOURCES MANAGEMENT

RIALTO TREATMENT SYSTEM CONDUIT AND WIRE SCHEDULE

	No.	COND	WIRE	FROM	TO	REMARKS	DRAWING LOCATION	2014 PROJECT NOTES
	1	(6) 4"	(4) 600 KCMIL, (1) 4/0	MAIN SWITCHGEAR	DISTRIBUTION PANEL MDP	480 VAC		EXISTING CONDUIT AND WIRE NOT PART OF THIS CONTRACT
	2	(1) 4"	(6) 350 KCMIL, (1) #1	DISTRIBUTION PANEL MDP	WELL CR-3 VFD	480 VAC		EXISTING CONDUIT AND WIRE NOT PART OF THIS CONTRACT
	3	(1) 4"	(6) 350 KCMIL, (1) #1	WELL CR-3 VFD	WELL CR-3 PUMP MOTOR	480 VAC		EXISTING CONDUIT AND WIRE NOT PART OF THIS CONTRACT
	4	(1) 3/4"	(3) #6, (1) #10	DISTRIBUTION PANEL MDP	TRANSFORMER T-1	480 VAC		EXISTING CONDUIT AND WIRE NOT PART OF THIS CONTRACT
	5	(1) 3"	(6) 250 KCMIL, (1) #2	DISTRIBUTION PANEL MDP	BOOSTER PUMP 1 VFD	480 VAC		EXISTING CONDUIT AND WIRE NOT PART OF THIS CONTRACT
	6	(1) 3"	(6) 250 KCMIL, (1) #2	DISTRIBUTION PANEL MDP	BOOSTER PUMP 2 VFD	STUBBED& CAPPED	E-19	EXISTING CONDUIT, EXTEND AND TERMINATE AS REQUIRED, FURNISH & INSTALL NEW WIRE.
	7	(1) 3"	CONDUIT ONLY	DISTRIBUTION PANEL MDP	BOOSTER PUMP 3 RVSSS	STUB & CAP		EXISTING CONDUIT AND WIRE NOT PART OF THIS CONTRACT
	8	(1) 3"	(6) 250 KCMIL, (1) #2	BOOSTER PUMP 1 VFD	BOOSTER PUMP 1 MOTOR	480 VAC		EXISTING CONDUIT AND WIRE NOT PART OF THIS CONTRACT
	9	(1) 3"	(6) 250 KCMIL, (1) #2	BOOSTER PUMP 2 RVSSS	BOOSTER PUMP 2 MOTOR	STUBBED& CAPPED	E-19	EXISTING CONDUIT, EXTEND AND TERMINATE AS REQUIRED, FURNISH & INSTALL NEW WIRE.
	10	(1) 3"	CONDUIT ONLY	BOOSTER PUMP 3 RVSSS	BOOSTER PUMP 3 MOTOR	STUB & CAP		EXISTING CONDUIT AND WIRE NOT PART OF THIS CONTRACT
	11	(1) 3"	(3) 350 KCMIL, (1) #4	DISTRIBUTION PANEL MDP	UV SYSTEM 1 CONTROL PANEL	480 VAC		EXISTING CONDUIT AND WIRE NOT PART OF THIS CONTRACT
	12	(1) 3"	(3) 350 KCMIL, (1) #4	UV SYSTEM 1 CONTROL PANEL	UV SYSTEM 1	480 VAC		EXISTING CONDUIT AND WIRE NOT PART OF THIS CONTRACT
	13	(1) 1"	(8) #12	PANEL LP-1	UV SYSTEM 1 BUILDING	120/208 VAC CIRCUITS		EXISTING CONDUIT AND WIRE NOT PART OF THIS CONTRACT
	14	(1) 3/4"	(8) #14	CONTROL PANEL CP-1	UV SYSTEM 1 CONTROL PANEL	120 VAC CONTROL		EXISTING CONDUIT AND WIRE NOT PART OF THIS CONTRACT
	15	(1) 3"	(3) 350 KCMIL, (1) #4	DISTRIBUTION PANEL MDP	UV SYSTEM 2 CONTROL PANEL	STUBBED& CAPPED	E-11	EXISTING CONDUIT, EXTEND AND TERMINATE AS REQUIRED, FURNISH & INSTALL NEW WIRE.
	16	(1) 3"	CONDUIT ONLY	UV SYSTEM 2 CONTROL PANEL	UV SYSTEM 2	REF ONLY, NOT INSTALLED AT THIS TIME		EXISTING CONDUIT AND WIRE NOT PART OF THIS CONTRACT
	17	(1) 2"	(4) #1, (1) #6	TRANSFORMER T-1	PANEL LP-1	120/208 VAC		EXISTING CONDUIT AND WIRE NOT PART OF THIS CONTRACT
	18	(1) 3/4"	(8) #14	CONTROL PANEL CP-1	BOOSTER PUMP 1 VFD	120 VAC CONTROL		EXISTING CONDUIT AND WIRE NOT PART OF THIS CONTRACT
	19	(1) 3/4"	(8) #14	CONTROL PANEL CP-1	BOOSTER PUMP 2 RVSSS	STUBBED& CAPPED	E-11	EXISTING CONDUIT, EXTEND AND TERMINATE AS REQUIRED, FURNISH & INSTALL NEW WIRE.
	20	(1) 1"	(16) #14	CONTROL PANEL CP-1	PCV-1/PS-1 JUNCTION BOX	120 VAC CONTROL		EXISTING CONDUIT AND WIRE NOT PART OF THIS CONTRACT
	21	(1) 1"	(4) BELDEN 8760	CONTROL PANEL CP-1	M-1 JUNCTION BOX	INSTRUMENTATION		EXISTING CONDUIT AND WIRE NOT PART OF THIS CONTRACT
	22	(1) 3/4"	(3) #14	PCV-1/PS-1 JUNCTION BOX	PRV-1 JUNCTION BOX	120 VAC CONTROL		EXISTING CONDUIT AND WIRE NOT PART OF THIS CONTRACT
	23	(1) 3/4"	CONDUIT ONLY	PCV-1/PS-1 JUNCTION BOX	PCV-2/PS-2 JUNCTION BOX	STUBBED& CAPPED	SEE REF DRAWING	EXISTING CONDUIT, EXTEND AND TERMINATE AS REQUIRED, FURNISH & INSTALL NEW WIRE.
	24	(1) 3/4"	CONDUIT ONLY	PCV-2/PS-2 JUNCTION BOX	PCV-3/PS-3 JUNCTION BOX	STUB & CAP		EXISTING CONDUIT AND WIRE NOT PART OF THIS CONTRACT
	25	(1) 3/4"	(1) BELDEN 8760	M-1 JUNCTION BOX	PRESSURE TRANSMITTER	INSTRUMENTATION		EXISTING CONDUIT AND WIRE NOT PART OF THIS CONTRACT
	26	(1) 3/4"	CONDUIT ONLY	M-1 JUNCTION BOX	M-2 JUNCTION BOX	STUB & CAP		EXISTING CONDUIT AND WIRE NOT PART OF THIS CONTRACT
	27	(1) 3/4"	CONDUIT ONLY	M-2 JUNCTION BOX	M-3 JUNCTION BOX	STUB & CAP		EXISTING CONDUIT AND WIRE NOT PART OF THIS CONTRACT
	28	(1) 3/4"	(8) #14	CONTROL PANEL CP-1	BOOSTER PUMP 3 RVSSS	STUB & CAP		EXISTING CONDUIT AND WIRE NOT PART OF THIS CONTRACT
	29	(1) 4"	CONDUIT ONLY	DISTRIBUTION PANEL MDP	PERCHLORATE PILOT TEST EQUIPMENT	STUB & CAP		EXISTING CONDUIT AND WIRE NOT PART OF THIS CONTRACT
	30	(1) 3/4"	(4) #10	DISTRIBUTION PANEL MDP	MBV-106, MBV-305 (NE CORNER OF POND)	480 VAC		EXISTING CONDUIT AND WIRE NOT PART OF THIS CONTRACT
	31	(1) 3/4"	(15) #14	CONTROL PANEL CP-1	MBV-106, MBV-305 (NE CORNER OF POND)	120 VAC CONTROL		EXISTING CONDUIT AND WIRE NOT PART OF THIS CONTRACT
	32	(1) 2"	(4) #3/0, (1) #6	DISTRIBUTION PANEL MDP	DISTRIBUTION PANEL DP-1	480 VAC		
	33							
*	34	(1) 2"	(2) FIBER OPTIC CABLES	CONTROL PANEL CP-1	PULLBOX AT SE CORNER OF WELL BLDG	F.O.COMMUNICATION	E-11	EMT CONDUIT W/12" RADIUS ELBOWS (O.H. INSIDE WELL CR-3 BUILDING)
*	35	(1) 2"	(2) FIBER OPTIC CABLES	PULLBOX AT SE CORNER OF CR3 BLDG	FIBER OPTIC MANHOLE (48" X 48" X 36")	F.O.COMMUNICATION	E-11	PVC JACKETED RIGID STEEL CONDUIT W/LARGE RADIUS ELBOWS
*	36	(1) 2"	(2) FIBER OPTIC CABLES	FIBER OPTIC MANHOLE	P.O.C OF DIRECT BURIAL CABLES FROM EW-1	F.O.COMMUNICATION	E-11	PVC JACKETED RIGID STEEL CONDUIT W/LARGE RADIUS ELBOWS
*	37	(1) 2"	(1) FIBER OPTIC CABLES	FIBER OPTIC MANHOLE	CONTROL PANEL CP-2 (TREATMENT PAD)	F.O.COMMUNICATION	E-11	PVC JACKETED RIGID STEEL CONDUIT W/LARGE RADIUS ELBOWS
	38	(1) 3/4"	(9) #14	MBV-106, MBV-305 POWER RACK TERMINAL BOX	SOV-117, SOV 118 (IN VALVE VAULT)	120 VAC CONTROL	E-11	RUN FROM EXIST CONTROL TERM BOX TO NEW VAULT
	39	(1) 3/4"	(1) BELDEN 8451	CONTROL PANEL CP-1	DPIT-101 @ BAG FILTERS F100A/F100B	INSTRUMENTATION	E-11	OH IN WELL CRS BLDG, UG FROM BLDG TO DPIT-101
	40	(1) 3/4"	(5) #12	PANEL LP-1	CONTROL PANEL CP-2 (TREATMENT PAD)	120 VAC POWER	E-11	120VAC POWER FOR CP-2 AND PANEL AIR CONDITIONER
	41	(1) 1"	(8) BELDEN 8451	CONTROL PANEL CP-2 (TREATMENT PAD)	ION EXCH TANKS INSTRUMENTS	INSTRUMENTATION	E-11	PDIT-301A, PDIT-301B, PDIT-301C, FIT-301A, FIT-301B, FIT-301C
	42	(1) 1"	(7) BELDEN 8451	CONTROL PANEL CP-2 (TREATMENT PAD)	GAC TANKS T401A 7 T401B INSTRUMENTS	INSTRUMENTATION	E-11	PDIT-401A, PDIT-401B, FIT-401A, FIT-401B
	43	(1) 1"	(6) BELDEN 8451	CONTROL PANEL CP-2 (TREATMENT PAD)	GAC TANKS T402A & T402B INSTRUMENTS	INSTRUMENTATION	E-11	PDIT-402A, PDIT-402B, FIT-402A, FIT-402B, FIT-501
	44	(1) 1"	(4) BELDEN 8451	CONTROL PANEL CP-2 (TREATMENT PAD)	DPIT-201 @ BAG FILTERS F200A/F200B	INSTRUMENTATION	E-11	INSTALL WP PULLBOX FOR CONNECTION OF CONDUIT 44 TO COUNTY IX VESSEL (TANK T-103)CP
	45	(1) 3/4"	(1) BELDEN 8451	DPIT-201 @ BAG FILTERS F200A/F200B	NEW COUNTY IX VESSELL TANK T-103	INSTRUMENTATION	E-11	PDIT-103
	46	(1) 1 1/2"	(30) #14	CONTROL PANEL CP-2 (TREATMENT PAD)	DISINFECTION SYSTEM 2	120 VAC CONTROL	E-11	DIGITAL IO FROM REMOTE CONTROL PANEL CP-2 TO DISINFECTION SYSTEM 2
	47	(1) 1 1/2"	(11) BELDEN 8451	CONTROL PANEL CP-2 (TREATMENT PAD)	DISINFECTION SYSTEM 2	INSTRUMENTATION	E-11	ANALOG IO FROM REMOTE CONTROL PANEL CP-2 TO DISINFECTION SYSTEM 2
	48	(1) 3/4"	(9) #14	CONTROL PANEL CP-2 (TREATMENT PAD)	UV SYSTEM 2 CONTROL PANEL	120 VAC CONTROL	E-11	DIGITAL IO FROM REMOTE CONTROL PANEL CP-2 TO UV-2
	49	(1) 3/4"	(1) ETHERNET CABLE	CONTROL PANEL CP-2 (TREATMENT PAD)	UV SYSTEM 2 CONTROL PANEL	ETHERNET COMMUNICATION	E-11	ETHERNET COMMUNICATION BETWEEN UV-2 AND CP-2
	50							
	51							
	52							
	53							
	54							
	55							
	56							
	57							
	58							
	59							
	60							

*FIBER OPTIC CABLES ARE CORNING PART NUMBER 072TU6-T4131D20

REV	DATE	REVISION	APPR'D	REV BY
–	2/28/14	SUBMITTAL TO SCE		

E8046
EXP. 9-30-14

JIM RUBINO
AUTOMATION & CONTROL SYSTEM DESIGN

4821 Burgundy Road
Woodland Hills, CA 91364
Tel (818) 225-7680
Fax (818) 225-7681
www.logicontrol.com

ERM

GROUNDWATER EXTRACTION AND TREATMENT SYSTEM COMBINED REMEDY SOURCE AREA OPERABLE UNIT, ROCKETS, FIREWORKS, AND FLARES SUPERFUND SITE

SCALE	DESIGNED BY	DRAWN BY	DRAWING NUMBER
AS SHOWN	JR/GV	JR/GV	
DATE	CHECKED	APPROVED	JOB NUMBER
FEB 2014	GV		2013175.00

TREATMENT PLANT
CONDUIT AND WIRE SCHEDULE

ENVIRONMENTAL RESOURCES MANAGEMENT

REV

SHEET 80

DISCIPLINE NO. E-21

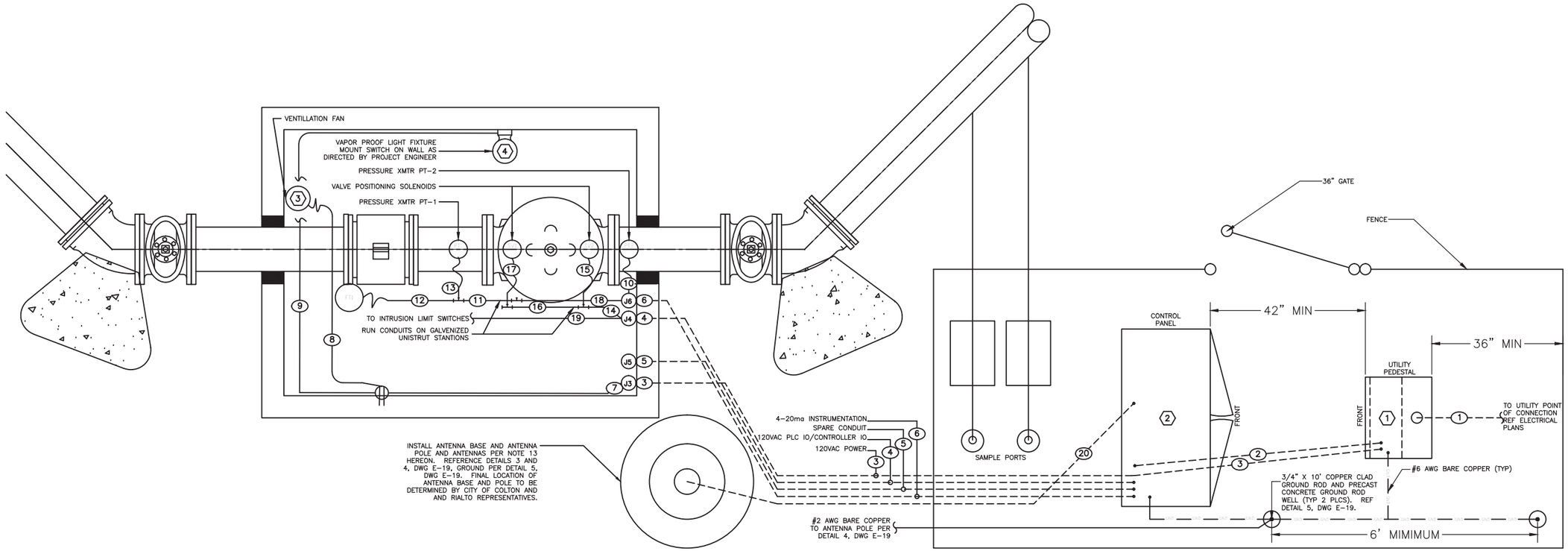

CONDUIT AND WIRE SCHEDULE					
No.	COND	WIRE	FROM	TO	REMARKS
1	3"	TBD	UTILITY POC	PEDESTAL SERVICE	WIRE BY UTILITY CO.
2	3/4"	X #12	PEDESTAL SERVICE	CONTROL PANEL	
3	1"	X #12	PEDESTAL SERVICE	VALVE VAULT	
4	1"	CONDUIT ONLY	CONTROL PANEL	VALVE VAULT	
5	1"	(4) 600 KCMIL, (1) 4/0	CONTROL PANEL	VALVE VAULT	
6	1"	CONDUIT ONLY	CONTROL PANEL	VALVE VAULT	
7	3/4"	6 #12	CONDUIT 3 J-BOX	VAULT RECEPTACLE	
8	1/2"	3 #12	VAULT RECEPTACLE	VAULT VENT FAN	
9	1/2"	3 #12	VAULT RECEPTACLE	VAULT LIGHT FIXTURE	
10	1/2"	1 BELDEN 8772	CONDUIT 6 J-BOX	PRESSURE XMTR PT2	
11	3/4"	2 BELDEN 8772	CONDUIT 9 "T"	CONDUIT 11 "T"	
12	1/2"	1 BELDEN 8772	CONDUIT 11 "T"	FLOW XMTR FT1	
13	1/2"	1 BELDEN 8772	CONDUIT 11 "T"	PRESSURE XMTR PT1	
14	3/4"	4 #14	CONDUIT 4 J-BOX	CONDUIT 14 "T"	
15	1/2"	3 #14	CONDUIT 14 "T"	SOLENOID SV2	
16	3/4"	3 #14	CONDUIT 14 "T"	CONDUIT 16 "T"	
17	1/2"	3 #14	CONDUIT 16 "T"	SOLENOID SV1	
18	3/4"	2 BELDEN 8772	CONDUIT 6 J-BOX	CONDUIT 18 "T"	
19	1/2"	6 #14	CONDUIT 4 J-BOX	INTRUSION LIMIT SW'S	
20	2"	(2) ANTENNA CABLES	CONTROL PANEL (RTU)	ANTENNA	REF NOTE 5

EQUIPMENT SCHEDULE

1. 120/240 VOLT, SINGLE PHASE, 3 WIRE-100 AMP METER SERVICE PEDESTAL PACIFIC UTILITY PRODUCTS CATALOG No. USPHB-M2100-112CTB-STAINLESS STEEL ENCLOSURE.
2. CONTROL PANEL/RTU CUSTOM ASSEMBLY, REF SHEETS E-23, E-24
3. VAULT VENTILATION FAN WITH BUILT-IN DISCONNECT SWITCH AND OVERLOAD PROTECTION. REF DRAWING 2013175.00 RIALTO-SHEET 28 C-23 GENERAL CIVIL DETAILS.
4. VAULT INCANDESCENT VAPOR PROOF LIGHTING FIXTURE, LUMARK (COOPER LIGHTING) ICVWIG WITH LED EQUIVALENT OF 100 WATT A21 INCANDESCENT LAMP

CONSTRUCTION NOTES

1. SERVICE ENTRY CONDUIT SHALL BE PER SCE SPECIFICATIONS
2. OTHER THAN SERVICE CONDUIT, ALL OTHER CONDUIT SHALL BE PVC-JACKETED RIGID GALVANIZED STEEL.
3. UNDERGROUND CONDUIT SHALL BE MINIMUM 12" BELOW FINISH GRADE.
4. ALL CONDUIT JOINTS AND TERMINATIONS SHALL BE ACCOMPLISHED BY MEANS OF THREADED FITTINGS. THREADLESS FITTINGS ARE NOT TO BE USED.
5. CONNECTIONS TO EQUIPMENT IN THE VALVE VAULT SHALL BE ACCOMPLISHED WITH SHORT LENGTHS (18" MAX) OF METALLIC SEALTIGHT FLEXIBLE CONDUIT AND APPROVED FITTINGS.
6. CONDUITS INSTALLED ON VALVE VAULT WALLS SHALL BE SPACED OFF WALLS WITH CAST "BACK STRAP SPACERS" AND ONE HOLE CAST MALLEABLE IRON ONE HOLE STRAPS. ANCHORS SHALL BE 1/4" WEDGE TYPE ANCHORS.
7. CONDUITS LOCATED PARALLEL TO THE PIPE LINE IN THE VALVE VAULT SHALL BE INSTALLED ON GALVANIZED STRUT WITH GALVANIZED 4-HOLE POST BASES. POST BASES SHALL BE ANCHORED TO VAULT BASE WITH 4 3/8" THREADED CONCRETE ANCHORS. ALL STRUT AND STRUT FITTINGS SHALL BE MANUFACTURED BY UNISTRUT OR APPROVED EQUAL. ALL BOLTS, NUTS, SPRING NUTS, WASHERS, ETC. SHALL BE ELECTRO-GALVANIZED. RED PLASTIC GUARDS SHALL BE INSTALLED ON THE TOP OF ALL STANCIONS. ALL CUT ENDS OF STRUT SHALL BE TREATED WITH COLD GALVANIZE PATCH PRODUCT.
8. ALL JUNCTION BOXES AND CONDUIT FITTINGS IN THE VALVE VAULT SHALL BE PVC JACKETED CAST MALLEABLE IRON.
9. ALL EXPOSED CONDUIT SHALL BE LEVEL, PLUMB AND/OR PARALLEL TO THE STRUCTURES TO WHICH IT IS FASTENED TO.
10. ALL WIRE SHALL BE STRANDED COPPER, TYPE THWN.
11. ALL PROPOSED ELECTRICAL MATERIALS SHALL BE SUBMITTED TO AND APPROVED BY THE PROJECT ENGINEER PRIOR TO PURCHASE.
12. ELECTRICAL SERVICE NEUTRAL SHALL BE GROUNDED AND BONDED TO MEET ALL THE APPLICABLE REQUIREMENTS OF THE CURRENT VERSION OF THE CALIFORNIA ELECTRICAL CODE AND ALL APPLICABLE LOCAL ORDINANCES.
13. ANTENNA BASE, POLE AND ANTENNAS INSTALLATION SHALL BE COORDINATED WITH CITY OF COLTON AND RIALTO REPRESENTATIVES. POLE AND ALL RELATED HARDWARE SHALL BE FURNISHED BY ELECTRICAL CONTRACTOR, ANTENNAS AND ALL RF EQUIPMENT SHALL BE FURNISHED BY THE CITIES OF COLTON AND RIALTO AND INSTALLED UNDER THEIR SUPERVISION.

REV	DATE	REVISION	APPR'D	REV BY
–	2/28/14	SUBMITTAL TO SCE		

E8046
EXP. 9-30-14

JIM RUBINO
AUTOMATION & CONTROL SYSTEM DESIGN

4821 Burgundy Road
Woodland Hills, CA 91364
Tel (818) 225-7680
Fax (818) 225-7681
www.logiccontrol.com

ERM

GROUNDWATER EXTRACTION AND TREATMENT SYSTEM COMBINED REMEDY SOURCE AREA OPERABLE UNIT, ROCKETS, FIREWORKS, AND FLARES SUPERFUND SITE

REV

SCALE	DESIGNED BY	DRAWN BY	DRAWING NUMBER	SHEET
AS SHOWN	JR/GV	JR/GV		81
DATE FEB 2014	CHECKED GV	APPROVED	JOB NUMBER 2013175.00	

RANDALL AVE ELECTRICAL PLOT PLAN

DISCIPLINE NO. E-22

ENVIRONMENTAL RESOURCES MANAGEMENT

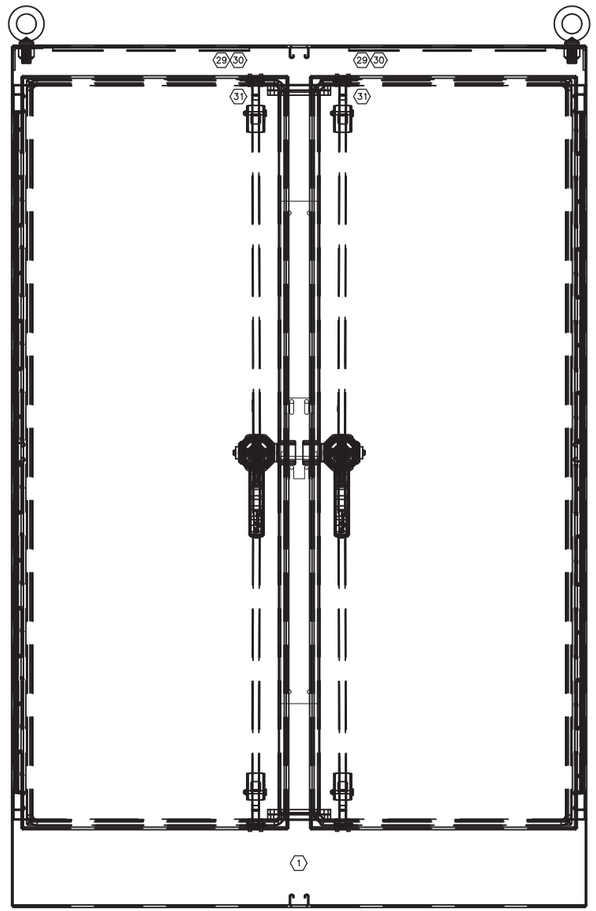

EXTERIOR ELEVATION (1 / E23)
NOT TO SCALE

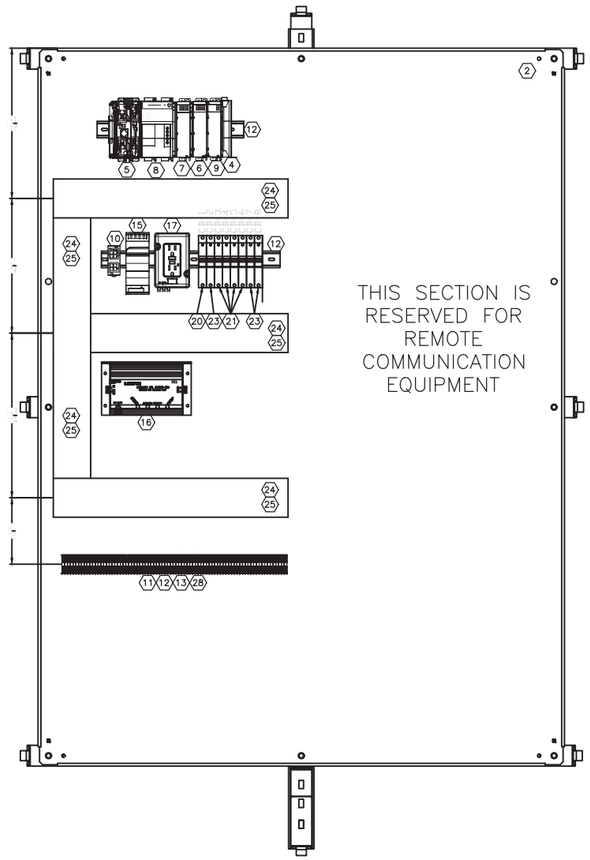

INTERIOR ELEVATION (2 / E23)
NOT TO SCALE

REV	DATE	REVISION	APPR'D	REV BY
–	2/28/14	SUBMITTAL TO SCE		

E8046
EXP. 9-30-14

JIM RUBINO
AUTOMATION & CONTROL SYSTEM DESIGN

4821 Burgundy Road
Woodland Hills, CA 91364
Tel (818) 225-7680
Fax (818) 225-7681
www.logicontrol.com

ERM

GROUNDWATER EXTRACTION AND TREATMENT SYSTEM COMBINED REMEDY SOURCE AREA OPERABLE UNIT, ROCKETS, FIREWORKS, AND FLARES SUPERFUND SITE

REV

SCALE	DESIGNED BY	DRAWN BY	DRAWING NUMBER
AS SHOWN	JR/GV	JR/GV	
DATE	CHECKED	APPROVED	JOB NUMBER
FEB 2014	GV		2013175.00

SHEET 82

RANDALL AVE CP LAYOUT

DISCIPLINE NO. E-23

ENVIRONMENTAL RESOURCES MANAGEMENT

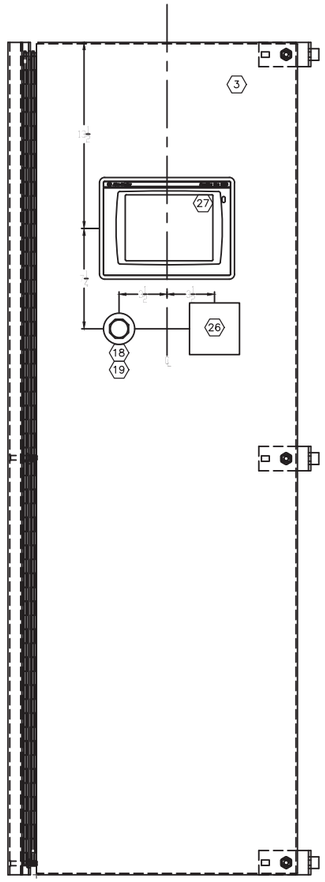

LEFT SWING PANEL ELEVATION (1 / E24)
NOT TO SCALE

Item	Qty.	Manufacture	Part#	DESCRIPTION
1	1	Hoffman Engineering	A724824SSFSDN4	Double Door Floor Mount Enclosure
2	1	Hoffman Engineering	A72P48F1	Back Panel
3	1	Hoffman Engineering	A72SP24F3	Swing out panel
4	1	Rockwell Automation	1769-ECR	Right End Terminator
5	1	Rockwell Automation	1769-L35E	CompactLogix Ethernet Processor, 750 K Memory
6	1	Rockwell Automation	1769-OA16	16 Point 120/240 ac Output Module
7	1	Rockwell Automation	1769-IA16	16 Point 120 VAC Input Module
8	1	Rockwell Automation	1769PA4	AC Power Supply
9	1	Rockwell Automation	1769-IF8	8 Channel Analog Voltage/Current Input Module
10	1	Rockwell Automation	1783-BMS10CL	8 Copper Port and 2 Fiber Port Stratix Switch
11	100	Rockwell Automation	1492H1	Terminals
12	2	Rockwell Automation	199DR1	Din Rail
13	1	Rockwell Automation	1492-N36	End Barrier
14	2	Rockwell Automation	1492-N47	End Anchor
15	1	Rockwell Automation	1606XL60D	24vdc 2.5 Amp Power Supply
16	1	Leviton	51020 WM	TVSS 120 vac
17	1	Rockwell Automation	1492-REC15	120 Vac Outlet
18	0	Rockwell Automation	800T-FX6D4	E Stop Button
19	0	Rockwell Automation	800T-X504Y	E Stop Legend Plate (Yellow)
20	1	Rockwell Automation	1489-M1C150	15 Amp Circuit Breaker
21	4	Rockwell Automation	1489-M1C020	2 Amp Circuit Breaker
22	0	Rockwell Automation	1489-M1C010	1 Amp Circuit Breaker
23	3	Rockwell Automation	1489-M1C050	5 Amp Circuit Breaker
24	1	Panduit	E3X3W6	3" x 3" x 72" White Panduit
25	1	Panduit	3" Cover	3" x 72" White Panduit Cover
26	1	CLA-VAL	TBD	1/4 Din Controller provided by others
27	1	Rockwell Automation	2711P-T10C4A8	OIT-PanelView Plus 6
28	1	Rockwell Automation	1492-N22	Terminal Strip Mounting Rail
29	2	Hoffman Engineering	LED24V15	LED Light Fixture
30	2	Hoffman Engineering	LPC72	Power Cord - LED Light
31	2	Hoffman Engineering	LDSWITCH	Door Switch - LED Light

BILL OF MATERIAL (2 / E24)

REV	DATE	REVISION	APPR'D	REV BY
–	2/28/14	SUBMITTAL TO SCE		

E8046
EXP. 9-30-14

JIM RUBINO
AUTOMATION & CONTROL SYSTEM DESIGN
4821 Burgundy Road
Woodland Hills, CA 91364
Tel (818) 225-7680
Fax (818) 225-7681
www.logicontrol.com

ERM

GROUNDWATER EXTRACTION AND TREATMENT SYSTEM COMBINED REMEDY SOURCE AREA OPERABLE UNIT, ROCKETS, FIREWORKS, AND FLARES SUPERFUND SITE

SCALE	DESIGNED BY	DRAWN BY	DRAWING NUMBER
AS SHOWN	JR/GV	JR/GV	
DATE	CHECKED	APPROVED	JOB NUMBER
FEB 2014	GV		2013175.00

RANDALL AVE CP LAYOUT AND BOM

REV

SHEET 83

DISCIPLINE NO. E-24

ENVIRONMENTAL RESOURCES MANAGEMENT

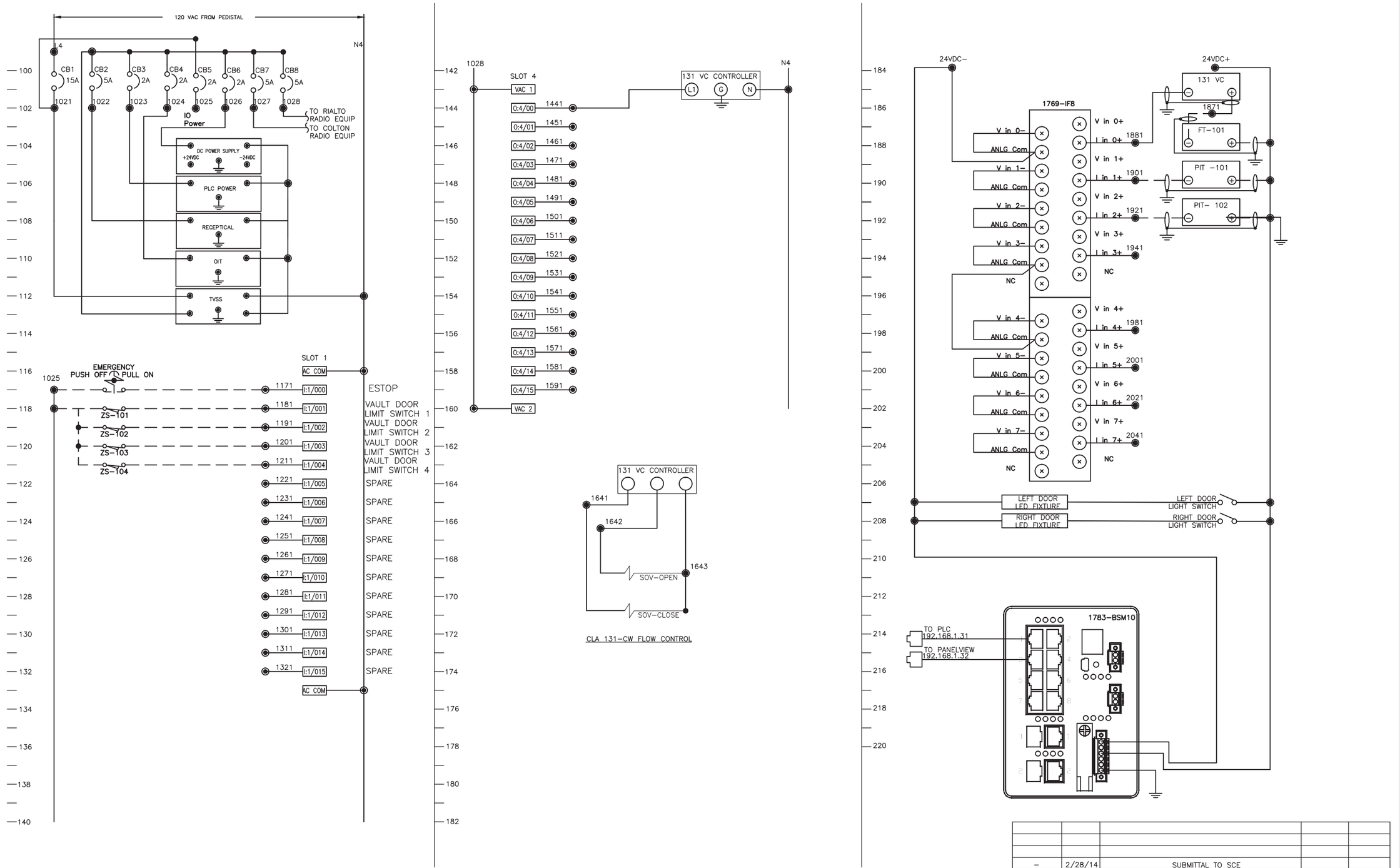

REV	DATE	REVISION	APPR'D	REV BY
–	2/28/14	SUBMITTAL TO SCE		

E8046
EXP. 9-30-14

JIM RUBINO
AUTOMATION & CONTROL SYSTEM DESIGN

4821 Burgundy Road
Woodland Hills, CA 91364
Tel (818) 225-7680
Fax (818) 225-7681
www.logicontrol.com

ERM

GROUNDWATER EXTRACTION AND TREATMENT SYSTEM COMBINED REMEDY SOURCE AREA OPERABLE UNIT, ROCKETS, FIREWORKS, AND FLARES SUPERFUND SITE

REV

SCALE	DESIGNED BY	DRAWN BY	DRAWING NUMBER
AS SHOWN	JR/GV	JR/GV	
DATE	CHECKED	APPROVED	JOB NUMBER
FEB 2014	GV		2013175.00

SHEET 84

RANDALL AVE ELECTRICAL WIRING DIAGRAM

DISCIPLINE NO. E-25

ENVIRONMENTAL RESOURCES MANAGEMENT

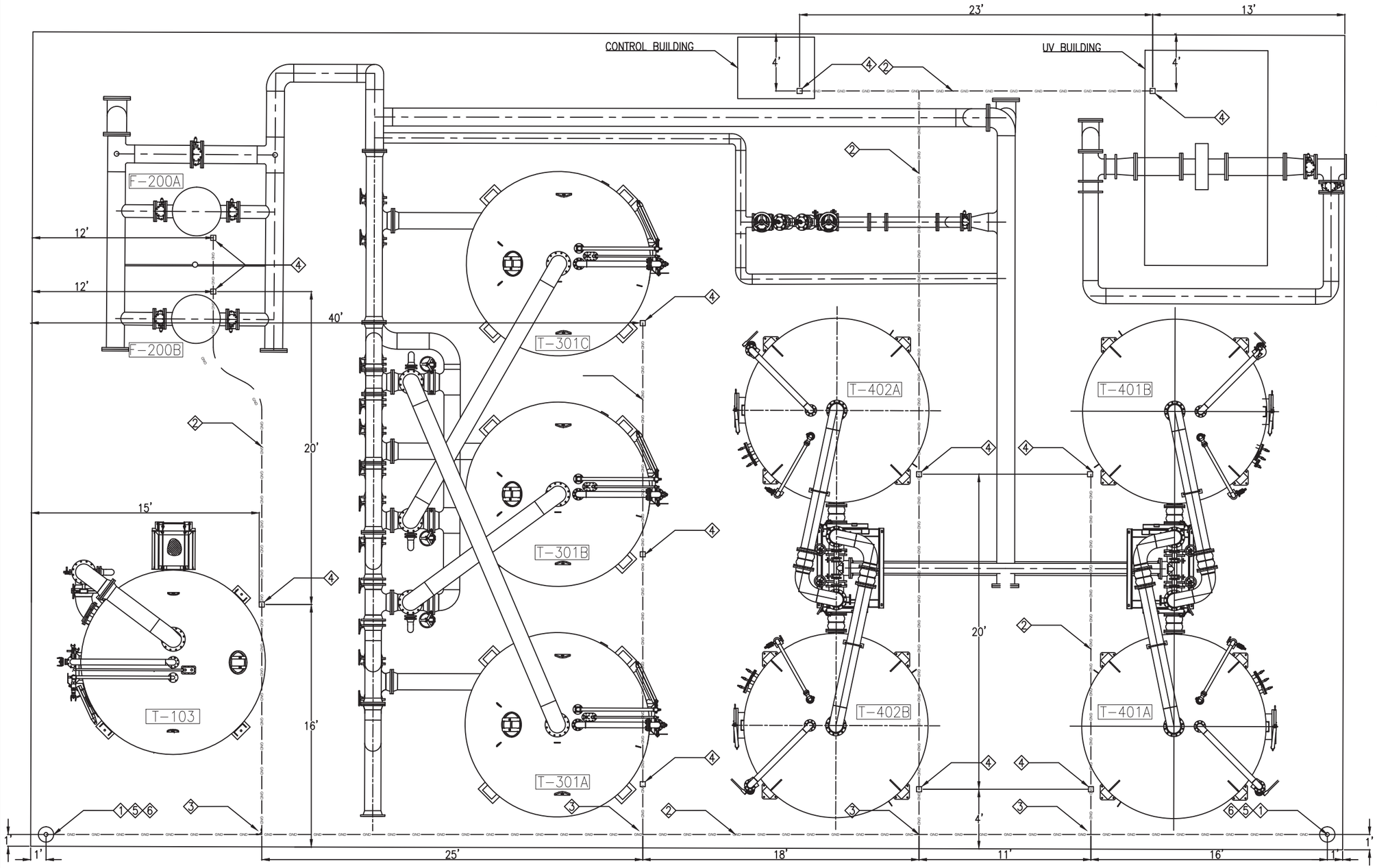

SHEET REFERENCED NOTES

1. GROUND ROD WELL. INSTALL FLUSH WITH FINISH CONCRETE. REF DETAIL 5, DWG E-19 FOR INSTALLATION.
2. 2/0 AWG BARE COPPER WIRE. INSTALL ON TOP OF PAD REBAR. ATTACH EACH SEGMENT OF GROUND WIRE TO REBAR IN 2 PLACES WITH BURNDY #YGL29C29 CROSS GRID CONNECTOR.
3. CONNECT NORTYH-SOUTH CONDUCTOR TO EAST-WEST CONDUCTOR WITH BURNDY #YGL29C29 CROSS GRID CONNECTOR (TYPICAL AT ALL CONDUCTOR CROSSING POINTS).
4. BURNDY #YGF292N GROUNDING PLATE. INSTALL FLUSH WITH FINISH CONCRETE. CONNECT TO GROUND GRID CONDUCTOR WITH 2/0 BARE COPPER JUMPER WIRE. SECURE PLATE TO ENSURE PLATE REMAINS IN POSITION DURING CONCRETE POURING AND FINISHING PROCESS.
5. 3/4" X 10' COPPER CLAD GROUND ROD. REF DETAIL 5, DRAWING E-19 FOR SIMILAR INSTALLATION.
6. BURNDY #YGL29C2 COMPRESSION GROUND ROD CLAMP. INSTALL PER MANUFACTURER'S INSTRUCTIONS.

GENERAL CONSTRUCTION NOTES

1. CONNECT TANKS TO GROUND PLATES WITH #1 AWG BARE COPPER WIRE JUMPERS. USE COMPRESSION LUGS FOR TERMINATION OF JUMPER WIRE AT TANKS AND GROUND PLATES. USE 1/2" X 1" STAINLESS STEEL BOLTS WITH STAINLESS STEEL FLAT AND SPLIT LOCK WASHERS TO FASTEN LUGS TO GROUND PLATES. INSTALL SAME BOLTS IN SPARE HOLES IN GROUND PLATES.
2. DRILL AND TAP 3/8"-16 HOLES IN TANK LEGS FOR CONNECTING GROUND JUMPER WIRE. USE SIMILAR HARDWARE AS THAT DESCRIBED IN NOTE 1 ABOVE TO FASTEN LUGS TO TANK LEGS.
3. GROUND RESISTANCE SHALL NOT EXCEED 5 OHMS. IF NECESSARY ADD ADDITIONAL GROUND ROD(S) BETWEEN THE TWO SHOWN HEREON TO ACHIEVE THE 5 OHM MINIMUM RESISTANCE.
4. INSTAL (2) BOLTS DESCRIBED IN NOTE 1 ABOVE IN GROUND PLATES LOCATED IN CONTROL BUILDING AND UV BUILDING FOR CONNECTION OF EQUIPMENT GROUNDS.
5. VERIFY LOCATION OF GROUND PAD IN UV BUILDING TO ENSURE IT IS LOCATED IN AN ACCESSIBLE AREA WITHIN THE UV CONTROL PANEL.

REV	DATE	REVISION	APPR'D	REV BY
–	2/28/14	SUBMITTAL TO SCE		

E8046
EXP. 9-30-14

JIM RUBINO
AUTOMATION & CONTROL SYSTEM DESIGN
4821 Burgundy Road
Woodland Hills, CA 91364
Tel (818) 225-7680
Fax (818) 225-7681
www.logicontrol.com

ERM

GROUNDWATER EXTRACTION AND TREATMENT SYSTEM COMBINED REMEDY SOURCE AREA OPERABLE UNIT, ROCKETS, FIREWORKS, AND FLARES SUPERFUND SITE

SCALE	DESIGNED BY	DRAWN BY	DRAWING NUMBER
AS SHOWN	JR/GV	JR/GV	
DATE	CHECKED	APPROVED	JOB NUMBER
FEB 2014	GV		2013175.00

REV

SHEET 85

TREATMENT PLANT EQUIPMENT PAD GROUNDING PLAN

DISCIPLINE NO. E-26

ENVIRONMENTAL RESOURCES MANAGEMENT