FIELD SAMPLING PLAN
FOR SAN GABRIEL VALLEY NPL AREA 3
REMEDIAL INVESTIGATION
FIELD ACTIVITIES

SAN GABRIEL BASIN
LOS ANGELES COUNTY, CALIFORNIA

EPA CONTRACT NO. 68-W-98-225
EPA WORK ASSIGNMENT NO. 141-RICO-09ES
CH2M HILL PROJECT NO. 175859.FI.01

Prepared for
U.S. Environmental Protection Agency
Region IX
75 Hawthorne Street
San Francisco, California 94105

Prepared by
CH2M HILL
Southern California Regional Office
3 Hutton Centre Drive
Suite 200
Santa Ana, California 92707

February 2003

FIELD SAMPLING PLAN
FOR SAN GABRIEL VALLEY NPL AREA 3
REMEDIAL INVESTIGATION
FIELD ACTIVITIES

SAN GABRIEL BASIN
LOS ANGELES COUNTY, CALIFORNIA

EPA CONTRACT NO. 68-W-98-225
EPA WORK ASSIGNMENT NO. 141-RICO-09ES
CH2M HILL PROJECT NO. 175859.FI.01

February 2003

NONDISCLOSURE STATEMENT

This document has been prepared for the U.S. Environmental Protection Agency under Contract No. 68-W-98-225. The material contained herein is not to be disclosed to, discussed with, or made available to any persons for any reason without the prior expressed approval of a responsible official of the U.S. Environmental Protection Agency.

U.S. ENVIRONMENTAL PROTECTION AGENCY REGION IX

Sample Plan Title:	Field Sampling Plan for San Gabriel Valley NPL Area 3 Remedial Investigation Field Activities
Site Name:	NPL Area 3
Site Location:	San Gabriel Valley
City/State/Zip:	Los Angeles County, California
Site EPA ID#:	CAD980818579
Anticipated Sampling Dates:	October 2002 to January 2005
Prepared By:	Michele Goddard — February 2003
Agency or Firm:	CH2M HILL, Inc.
Address:	3 Hutton Centre Drive, Suite 200
City/State/Zip:	Santa Ana, California 92707
Telephone:	714/429-2000
EPA Project Manager:	Lisa Hanusiak Section: SFD-7-3 415/972-3089 Phone No.
SAP Approval Date:	

* *

(for EPA use)

SUPERFUND

Received by Superfund Remedial Project Manager: __________ Date

Reviewed by: ______________________________ __________ Date

APPROVED / NOT APPROVED

SUPERFUND

* *

Expedited Review? Yes/No

QAO

Received by Quality Assurance Office: __________ Date

Reviewed by: ______________________________ __________ Date

Approved: ______________________________ __________ Date
Chief, Quality Assurance Office
Environmental Services Branch, OPM

QAO

* *

Contents

Section **Page**

Section 1 Objectives **1-1**
1.1 Background 1-1
1.2 Objectives 1-1

Section 2 Site Background **2-1**
2.1 Location and Topography 2-1
2.2 EPA Activities in the OU Area 2-1
2.3 Hydrogeology 2-2
2.4 Water Quality 2-4

Section 3 Maps **3-1**

Section 4 Rationale for Sample Locations, Number of Samples, and Laboratory Analyses **4-1**
4.1 Groundwater Monitoring 4-1
4.1.1 Sampling Locations 4-1
4.1.2 Number of Samples 4-2
4.1.3 Laboratory Analyses 4-3
4.2 Investigation-Derived Wastes 4-3
4.2.1 Drill Cuttings and Fluids 4-3
4.2.2 Development and Purge Water 4-4

Section 5 Request for Analyses **5-1**
5.1 Analytical Parameters 5-1
5.2 Schedule 5-2

Section 6 Field Methods and Procedures **6-1**
6.1 Monitoring Well Drilling and Construction 6-1
6.1.1 Drilling 6-1
6.1.2 Borehole Drill Cuttings Collection 6-2
6.1.3 Well Installation and Construction 6-2
6.2 Groundwater Sample Collection 6-6
6.2.1 Cluster Monitoring Wells 6-6
6.2.2 MP Monitoring Wells 6-8
6.2.3 Field Parameters Measurement 6-8
6.3 Sample Containers and Preservatives 6-9
6.3.1 Groundwater 6-9
6.3.2 Investigation-Derived Wastes 6-10
6.4 Decontamination 6-11
6.5 Containment and Disposal of Investigation-Derived Waste 6-11
6.5.1 Drill Cuttings and Drilling Fluids 6-11
6.5.2 Development and Purge Water 6-12
6.5.3 Clothing 6-13

6.6 Sample Management Procedures and Documentation 6-13
6.6.1 Sample Packaging and Shipment 6-13
6.6.2 Sample Labeling 6-14
6.6.3 Sample Documentation 6-14
6.7 Quality Control Samples 6-16
6.7.1 Field Duplicates 6-16
6.7.2 Field Blanks 6-16
6.7.3 Laboratory QC Samples 6-16
6.7.4 Temperature Blanks 6-17

Section 7 Health and Safety Plan 7-1

Section 8 References 8-1

Appendixes

A Analytical Program Technical Specifications

A-1 TCL Volatile Organic Compounds (VOCs) plus MTBE
A-2 1,4-Dioxane
A-3 N-Nitrosodimethylamine (NDMA)
A-4 Perchlorate
A-5 Hexavalent Chromium
A-6 TAL Metals (field filtered)
A-7 Anions: Nitrate-N
A-8 1,2,3-Trichloropropane
A-9 Semivolatile Organic Compounds
A-10 Flashpoint
A-11 pH
A-12 8260 VOCs
A-13 Total Petroleum Hydrocarbons-CA LUFT
A-14 TTLC Metals

B Summary of Multiport Monitoring Well System

C U.S. EPA Region IX Instructions for Sample Shipping and Documentation

D Health and Safety Plan

E Request for Laboratory Sample Analysis and Data Evaluation Form

Tables

2-1 Selected Concentrations of Contaminants of Concern, NPL Area 3, San Gabriel Valley 2-19

4-1 Proposed Screen Intervals for Cluster and Multiport Monitoring Wells 4-2

5-1a Analytical Parameters, Methods, and Detection Limits for Groundwater and Well Development Samples 5-2

5-1b Analytical Parameters, Methods, and Detection Limits for Drill Cuttings and Drilling Mud 5-2

5-2a Request for Analyses: Initial Groundwater Sampling Event 5-5

5-2b Request for Analyses: Typical Quarterly Sampling Event 5-7

5-2c Request for Analyses: Third Quarterly Sampling Event 5-9

5-3a Request for Analyses: Investigation-Derived Wastes 5-11

5-3b Request for Analyses: Investigation-Derived Wastes 5-13

Figures

1-1 Area 3 RI/FS Location 1-3

2-1 Hydrogeological Map 2-7

2-2 Hydrogeologic Cross Section A-A' 2-9

2-3 Hydrogeologic Cross Section B-B' 2-11

2-4 Hydrogeologic Cross Section C-C' 2-13

2-5 Hydrogeologic Cross Section D-D' 2-15

2-6 Location of Proposed Cluster and Multiport Wells 2-17

6-1 Typical Design Detail for Multiport Monitoring Well 6-19

6-2 Typical Design Detail for 4-inch Cluster Well 6-21

6-3 Below Grade Surface Closure Construction Details 6-23

This page intentionally left blank.

Acronyms

bgs	below ground surface
°C	degrees Celsius
CLP	contract laboratory program
COC	chain-of-custody
DQO	data quality objective
EC	electrical conductivity
EPA	Environmental Protection Agency
FSP	field sampling plan
GAC	granular activated carbon
gpm	gallons per minute
HCl	hydrochloric acid
HPLC	high-performance liquid chromatography
ID	identification
LARWQCB	Los Angeles Regional Water Quality Control Board
L/min	liters per minute
MCL	maximum contaminant level
MDL	method detection limits
mL	milliliter
mL/minute	milliliter per minute
MP	multiport
MS	matrix spike
MSD	matrix spike duplicate
MS/MSD	matrix spike/matrix spike duplicate
NDMA	n-nitrosodimethylamine
NTU	nephelometric turbidity units
OU	operable unit
PCE	perchloroethylene (tetrachloroethylene)
PE	performance evaluation

PID	photoionization detector
PRP	potentially responsible party
QAO	Quality Assurance Office
RD/RA	remedial design/remedial action
RFA	request for analyses
RI	remedial investigation
RI/FS	remedial investigation/feasibility study
RLSA	request for laboratory sample analysis
RPM	remedial project manager
RSCC	Regional Sample Control Center
SP	spontaneous potential
SVOC	semivolatile organic compound
TCE	trichloroethylene
TPH	total petroleum hydrocarbons
TPHd	total petroleum hydrocarbons - gasoline
TPHg	total petroleum hydrocarbons - diesel
TSDF	treatment, storage, and disposal facility
TTLC	total threshold limit concentration
VOA	volatile organic analysis
VOC	volatile organic compound

Section 1
Objectives

This Field Sampling Plan (FSP) has been prepared to support field and laboratory activities associated with the remedial investigation (RI) for San Gabriel Valley National Priorities List (NPL) Area 3 (Area 3) by the U.S. Environmental Protection Agency (EPA). The initial field activities will include the installation and sampling of two cluster and three multiport (MP) monitoring wells in Area 3. This FSP was developed in accordance with EPA Region IX, Guidance for Preparation of a U.S. EPA Region IX, Field Sampling Plan for EPA-Lead Superfund Projects (EPA, 1993) and accompanies the data quality objectives (DQOs), which can be found in the companion Quality Assurance Project Plan (QAPP [EPA, 2002]).

1.1 Background

The San Gabriel Basin is located in the San Gabriel Valley in eastern Los Angeles County, California, and Area 3 is located in the western portion of the San Gabriel Basin (Figure 1-1). Groundwater containing volatile organic compounds (VOCs) has been detected in approximately 30 wells throughout the Area 3 study area. VOCs at concentrations that exceed state or federal maximum contaminant levels (MCLs) for drinking water have impacted approximately one half of the production wells in that area.

Based on available production well data, the extent of VOC contamination has not changed for more than a decade. This is apparently due to the fact that Area 3 is within a regional depression of groundwater levels induced by groundwater pumping in the area. However, the sources of contamination, and the long-term effects of contamination on potable water supply wells are poorly understood. Furthermore, groundwater quality data for Area 3 is primarily from samples collected from production wells with long or multiple screened intervals (i.e., depth-discrete water quality data are not available).

Site assessment investigations of potentially responsible party (PRP) facilities within Area 3 have just been started and additional data are needed to determine the relationship between the contaminants identified at these sites and those impacting production wells within Area 3.

1.2 Objectives

The objectives of the field activities are listed below:

- Characterize the three-dimensional nature and extent of VOC contamination in Area 3
- Evaluate whether contaminants such as 1,4-dioxane, perchlorate, and n-nitrosodimethylamine (NDMA), discovered in other parts of the San Gabriel Basin, are present in Area 3

- Collect groundwater data that would assist in identifying contaminant source areas within Area 3

The remainder of this FSP discusses the Area 3 background (Section 2), lists relevant maps and figures (Section 3), discusses the sampling rationale (Section 4), presents requests for analyses for the various field sampling activities (Section 5), and describes the field and laboratory methods and procedures that will be used during the RI activities (Section 6). Figures and tables are provided at the end of each section.

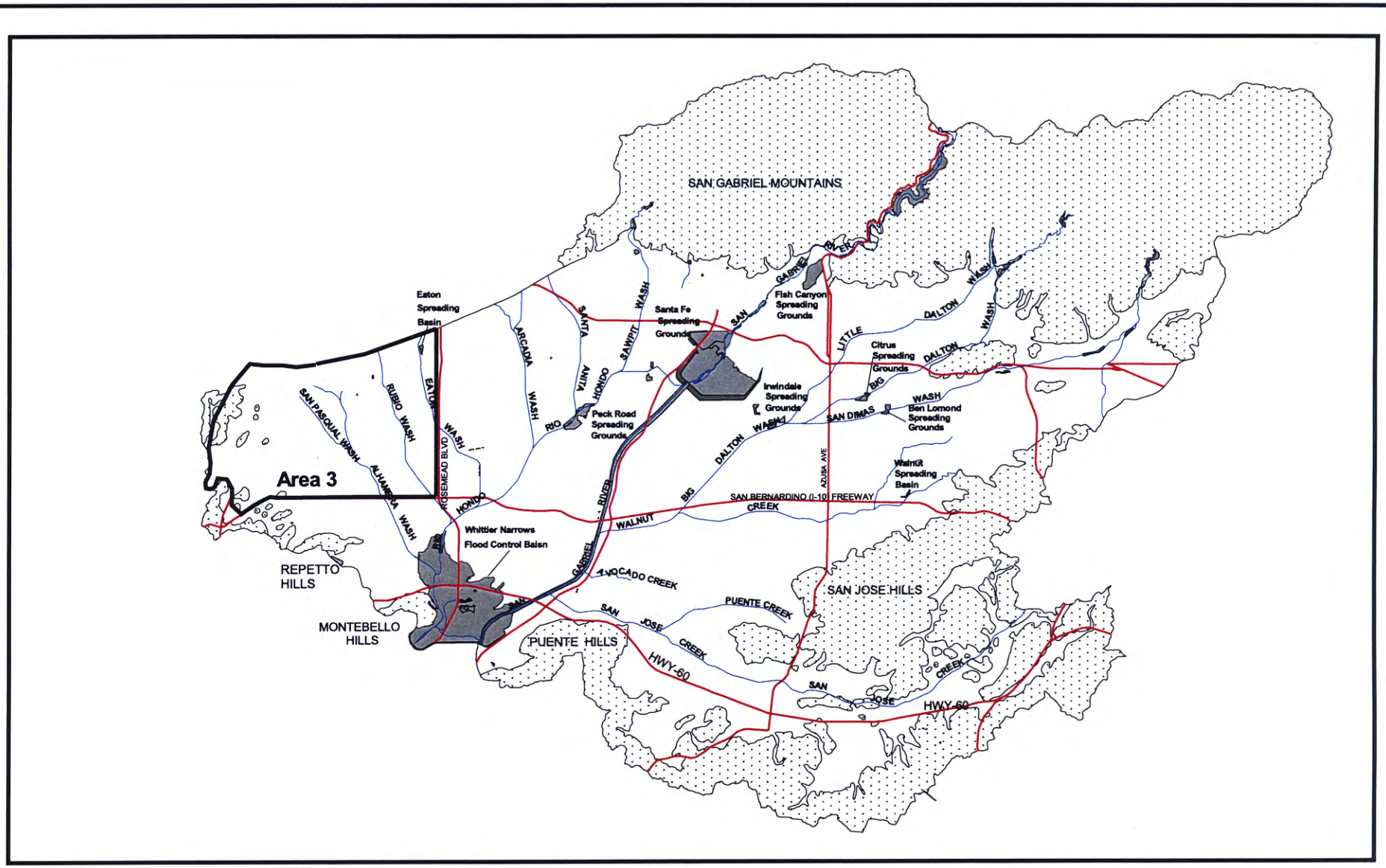

FIGURE 1-1
AREA 3 RI/FS LOCATION
Area 3 Field Sampling Plan

H:\EPA\Alhambra\154292\gis\fig1_8x11_fprv2.apr9/10/2002

Section 2
Site Background

2.1 Location and Topography

NPL Area 3 is located along the western boundary of the San Gabriel Valley (Figure 1-1), approximately 25 miles from the Pacific Coast, in eastern Los Angeles County. The San Gabriel Basin, a broad piedmont plain that slopes gradually to the southwest at a gradient of approximately 65 feet per mile, is located within the San Gabriel Valley (CDWR, 1934). This structural basin is a natural groundwater reservoir that collects rainfall on the valley floor and runoff from the surrounding highlands, recharging the groundwater aquifer.

The San Gabriel Basin is bounded to the southwest, south, and southeast by a crescent-shaped series of low-lying hills. The hills making up the system, from west to east, are the Repetto, Merced, Puente, and San Jose Hills. The only significant break along this boundary falls between the Merced and Puente Hills at Whittier Narrows. Whittier Narrows is the lowest point in the San Gabriel Valley, and is the exit for the San Gabriel River and Rio Hondo and their tributaries, which drain the San Gabriel Basin. Whittier Narrows is the only area where groundwater flows out of the San Gabriel Basin.

The Raymond Fault forms the northern boundary of Area 3, separating the Main San Gabriel Basin from the Raymond Basin located to the northwest. The Repetto Hills abut the western edge of the area, and Rosemead Avenue and the Interstate 10 Freeway have been selected as the eastern and southern geographic boundaries, respectively. Topographic elevation ranges from approximately 550 feet above mean sea level (amsl) in the northern and northwestern portions of Area 3, to approximately 300 feet amsl in the southern portion of Area 3.

2.2 EPA Activities in the OU Area

The San Gabriel Valley has been the focus of environmental investigations since 1979, when groundwater contaminated with VOCs was first identified. In May 1984, four broad areas of contamination within the basin were listed as San Gabriel Areas 1 through 4 on the EPA NPL. EPA subsequently divided the basin into eight operable units (OUs) to provide a means of describing hydrogeology and contaminant distribution, and to develop and plan remedial activities in the basin.

EPA began conducting RI activities in the San Gabriel Basin in the mid 1980s. RI activities included numerous field investigations to generate hydrogeologic and groundwater quality data; collecting and reviewing hydrogeologic data; database development; development of conceptual models of basin hydrogeology, including groundwater flow and contaminant transport; and construction and calibration of a three-dimensional groundwater flow model.

Available groundwater quality data for Area 3 are primarily from wellhead sampling of production wells. Based on wellhead data, the extent of contamination has apparently not changed for more than a decade. This is likely due to the fact that Area 3 is located within a regional depression of groundwater levels induced by groundwater pumping in the area. However, because of the long or multiple screened or perforated intervals, some as great as 500 feet, in the production wells, the vertical extent of VOC contamination throughout Area 3 is not known. Additionally, because of the limited number of monitoring wells in Area 3, groundwater gradients, flow directions, and the horizontal extent of contamination are not well understood.

To date, little PRP site assessment work has been conducted in Area 3. However, at EPA's request, the Los Angeles Regional Water Quality Control Board (LARWQCB) has stepped up efforts to identify the potential sources of VOC contamination detected in groundwater in Area 3. Currently, groundwater monitoring data are available at two sites within Area 3: the Temple City Sheriff's Station, located in the eastern portion of Area 3, and Charter Communications, located in the southwest portion of Area 3.

Area 3 is in the initial stage of the remedial investigation/feasibility study (RI/FS) process. In January 2001, the Alhambra Operable Unit Draft Data Evaluation Report was completed (EPA, 2001). The report identified data gaps within Area 3 and recommended appropriate field activities to be conducted to meet the technical goals and objectives of the RI.

2.3 Hydrogeology

The San Gabriel Groundwater Basin contains alluvium and assorted deposits of Recent and Pleistocene age (younger than 1.8 million years). The San Gabriel Mountains and, to a lesser extent, the south-flanking low hills are the sources of the basin-fill sediments, which reach a maximum depth of approximately 4,000 feet in the southwestern portion of the Basin. The basement rocks, and most of the Tertiary rocks, have a hydraulic conductivity of at least two orders of magnitude less than the alluvial materials that fill the Basin. Thus, relative to the alluvium, they are considered nonwater-bearing units (CDWR, 1966).

The Rio Hondo and San Gabriel River systems drain the San Gabriel Mountains, and carry runoff into the San Gabriel and Central Basins. The Rio Hondo and San Gabriel River systems eventually flow through Whittier Narrows, a structural depression located between the Montebello and Puente Hills. Groundwater movement through most of the San Gabriel Basin is generally from the perimeter of the basin toward Whittier Narrows, which is the only area through which substantial subsurface outflow from the basin occurs. However, groundwater pumping in the western portion of the basin (including Area 3) has reversed natural groundwater flow directions.

The hydrogeology of Area 3 can be grouped into three regions: west, central, and east. The western portion of Area 3 is characterized by complexly faulted and folded sedimentary bedrock, trending northwest, with folds plunging to the southeast (Figure 2-1). In addition, many bedrock outcrops form the series of low-lying hills, comprising parts of the Repetto Hills in the western portion of Area 3. The alluvial sediments of this area are predominantly fine-grained, contributed from the marine sedimentary rocks of the Repetto Hills. Groundwater in this area is relatively shallow, averaging approximately 50 feet below

ground surface (bgs) near the exposed bedrock to 160 feet bgs or more along Mission Road (Figure 2-1). The depth to water of 160 feet bgs appears to be anomalous and may be related to perched groundwater conditions. The top of the unconfined aquifer is thought to be around 275 feet bgs

The central portion of Area 3, which corresponds roughly to Alhambra and San Pascual Washes, is a transition zone between the western and eastern areas of the study area. In this area, the complex faulting and folding seen in the western portion are not visible and the depth to groundwater increases, in part due to the increasing ground surface elevation, increasing depth to bedrock, proximity to active production wells, and the absence of fine-grained alluvium impeding downward groundwater flow.

The eastern portion of Area 3 is characterized by coarse-grained alluvial sediments likely derived from the crystalline rocks of the San Gabriel Mountains. Depth to groundwater in the eastern portion of Area 3 is generally between 280 and 380 feet bgs. Stream channel deposits overlie the alluvium and consist of interfingering lenses of cobbles, gravel, sand, and silt that occur in channels developed (scoured) by active or historic surface water bodies.

Lithologic logs from production wells and monitoring wells have been used to prepare four hydrogeologic cross sections that display faults and lithologic units that might affect the rate and direction of groundwater flow in Area 3. Lithologic and well construction data for wells located within Area 3 were obtained from EPA's San Gabriel Basin database, as well as the Los Angeles County Department of Public Works. Well and cross section locations are shown in Figure 2-1. The cross sections are shown in Figures 2-2, 2-3, 2-4, and 2-5. Lithologic units have been grouped into the following categories: (1) predominately sand and gravel (i.e., relatively high permeability); and (2) predominantly clay and silt (i.e., relatively low permeability). Some wells have been projected laterally up to 5,500 feet onto the plane of the cross sections.

There does not appear to be any laterally extensive correlation in fine-grained lenses observed from lithologic logs. However, some general trends in grain size distribution are observable including the prominence of massive sand and gravel deposits in the central and eastern portion of Area 3, and the greater abundance of thicker fine-grained lenses in the western portion of Area 3 and along the Alhambra Wash. This appears to be consistent with variations in source rock for the alluvial sediments.

Groundwater flow conditions throughout the San Gabriel Basin are largely controlled by the volume of water flowing into and out of the Basin, and the hydrogeologic properties of the alluvial aquifer. Historically, and before the invention of the deep turbine well pump, the alluvial aquifer was in a state of approximate dynamic equilibrium, with recharge equaling discharge over the course of hundreds of years. Under predevelopment conditions, virtually all subsurface outflow occurred at Whittier Narrows (EPA, 1992) and groundwater flow patterns throughout the Basin likely paralleled the topography. In Area 3, groundwater likely flowed toward the southeast under predevelopment conditions.

With the advent of the deep turbine well pump in 1909, groundwater pumping increased dramatically in the San Gabriel Basin. Groundwater pumping, which is by far the greatest source of outflow from the Basin, greatly influences groundwater flow conditions, on both a

regional and local scale. Locally, concentrated pumping can produce cones of depression that are controlled in size by a well's pumping rate and the hydraulic conductivity of the surrounding aquifer. This is the case in Area 3.

Figure 2-1 shows water level contours for the central and eastern portions of Area 3, representing January 2001 conditions. Groundwater elevation data for the western portion of the AOU are not available due to a lack of available wells. This figure illustrates that groundwater flow in Area 3 is dominated by groundwater pumping centers in the east and central portions of the study area. Groundwater in Area 3 generally flows toward areas of high groundwater production, where water levels are lowered.

Estimated horizontal gradients in the eastern portion of Area 3 range from 0.002 to 0.008, based on groundwater levels in the summer of 2000, (EPA, 2001). No data are available to discern vertical hydraulic gradients in Area 3. However, vertically downward gradients are expected throughout Area 3 due to the significant pumping of groundwater at depth.

Hydraulic conductivity is a measure of how easily fluids can flow through porous media. Hydraulic conductivity estimates range from 44 feet per day (ft/day) at Well 01900515, located adjacent to the southern boundary of Area 3, to 380 ft/day at Well 01900927, located adjacent to the eastern boundary of the study area. The average of hydraulic conductivity estimates available from aquifer tests of wells in Area 3 and nearby vicinity is approximately 200 ft/day.

2.4 Water Quality

Table 2-1 summarizes water quality data for wells located within Area 3 based on information in EPA's San Gabriel database. Wells are organized in Table 2-1 by the water purveyor who owns and operates each well. The following text describes the types of contaminants present in groundwater in Area 3, the lateral and vertical extent, and potential sources for the contamination observed in groundwater.

The predominant contaminants detected in groundwater in Area 3 are tetrachloroethylene (PCE) and trichloroethylene (TCE). Figure 2-6 illustrates the distribution of PCE and TCE detected in shallow and deep groundwater wells throughout Area 3. Shallow groundwater quality data and soil vapor data collected at several PRP facilities are shown, and the areas of VOC contamination are differentiated on the basis of the predominant contaminant (PCE, TCE, or both).

A relatively large area of PCE contamination is present in groundwater in the eastern portion of Area 3, with a smaller area present in the north-central portion of the study area. Groundwater contamination between these plumes appears to be dominated by TCE. There is a small area of groundwater contamination in the southeastern portion of Area 3 that includes both PCE and TCE. The somewhat distinct characteristics of the areas of VOC contamination in Area 3 suggest there are multiple sources for this contamination. There are no production wells where the alluvial aquifer thickness decreases significantly against the Repetto Hills. Consequently, the current understanding of the lateral extent of contamination in the western portion of Area 3 is poorly understood.

Additionally, the vertical extent of VOC contamination throughout the OU is not well known. Wellhead concentrations from production wells that produce water from long or multiple screen intervals may not yield accurate information about the occurrence and concentration of contamination present in the groundwater aquifer. For example, a discrete hydrogeologic zone containing elevated contaminant concentrations may be masked in a well having a long screened interval due to dilution from clean, or less-contaminated, zones also providing water to the well.

This page intentionally left blank.

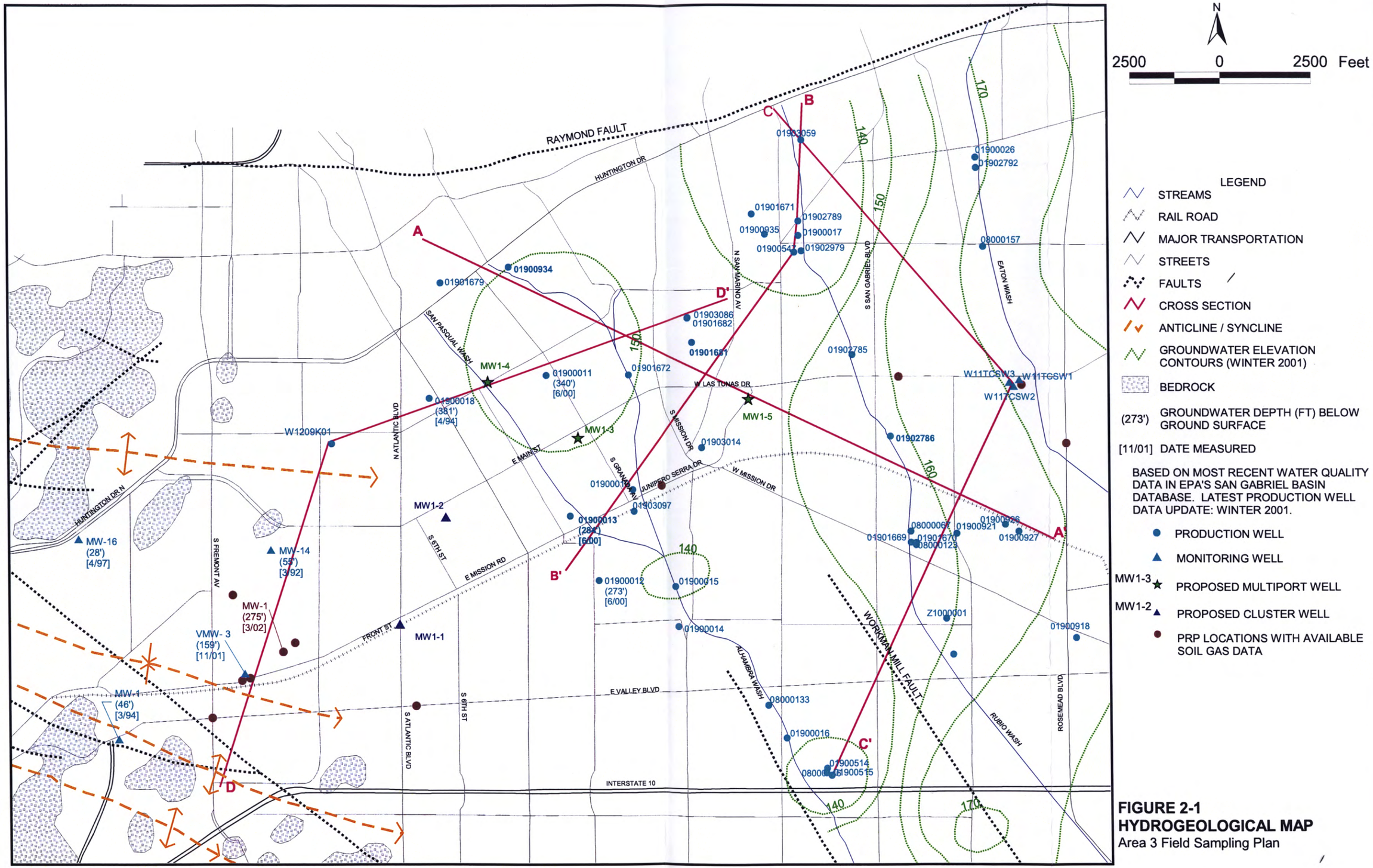

FIGURE 2-1
HYDROGEOLOGICAL MAP
Area 3 Field Sampling Plan

H:\EPA\Alhambra\154292\gis\contour_fprv1.apr 9/12/2002

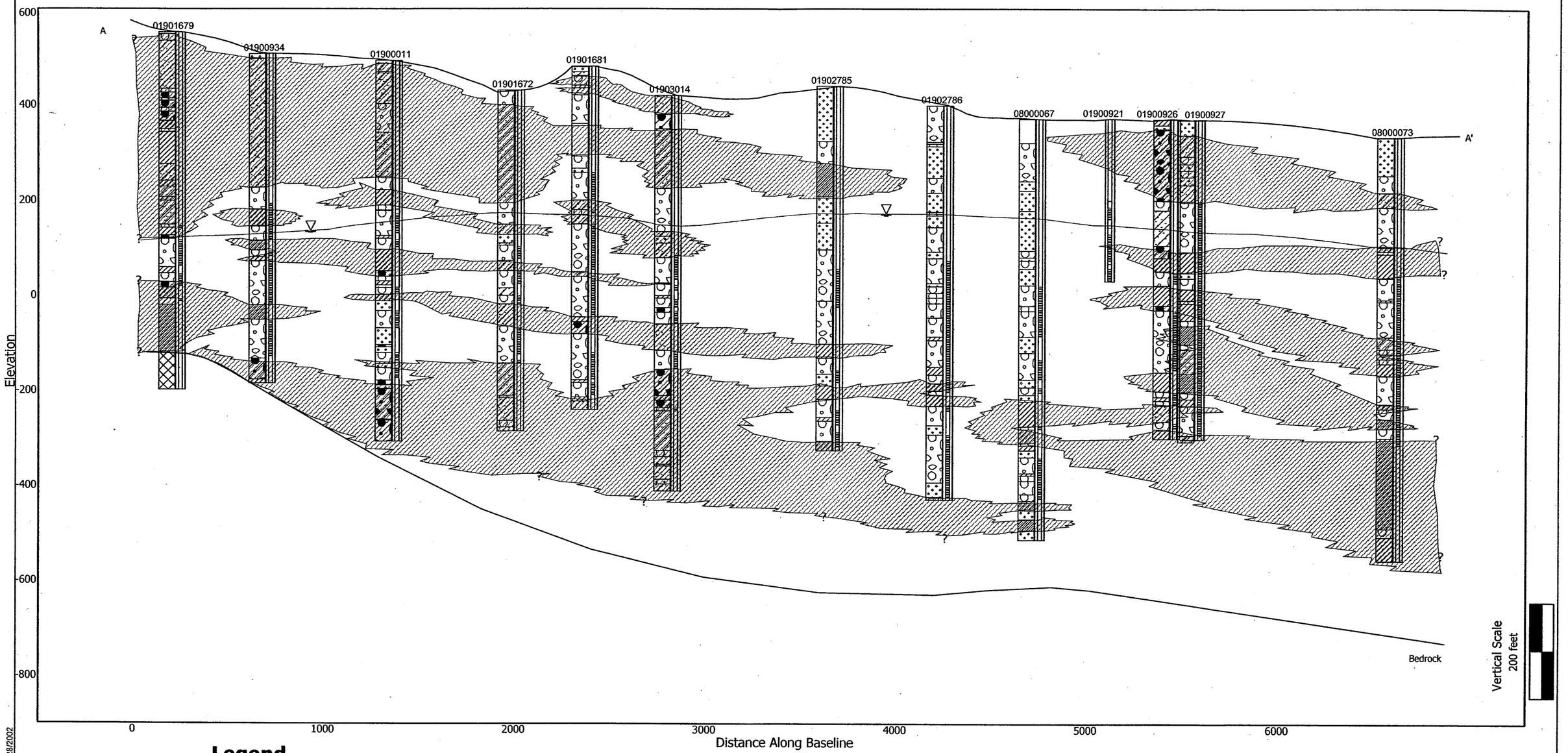

Horizontal Scale
500 feet

Legend

Predominant Lithology

- Mostly Clay/Silt
- Mostly Sand/Gravel

Peizometric surface, based on depth to water measurements between October and December 2001 (Source: Los Angeles County Department of Public Works, August 2002, http://ladpw.org.wrd)

Well Construction

- Perforated Intervals

Lithology

- Clay/Silt
- Gravel
- Gravelly Clay
- Sandy Clay
- Sand
- Bedrock

Figure 2 - 2
Hydrogeologic Cross-Section A-A'
Area 3 Field Sampling Plan

\\IS_Projects\gintw\transger\AL\AA200208_AA.GDW 08/28/2002

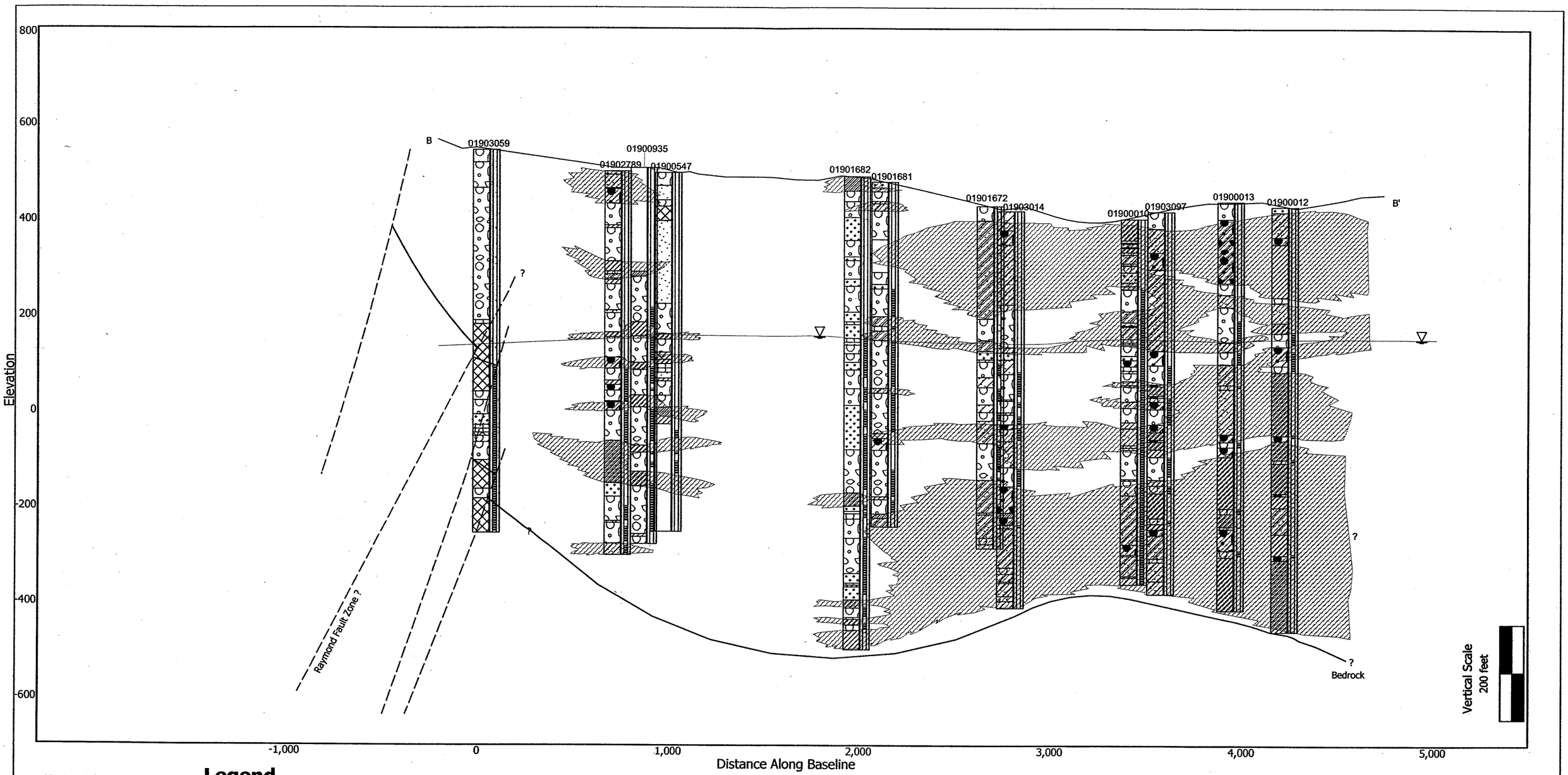

Horizontal Scale
500 feet

Legend

Predominant Lithology

- Mostly Clay/Silt
- Mostly Sand/Gravel

Peizometric surface, based on depth to water measurements between October and December 2001 (Source: Los Angeles County Department of Public Works, August 2002, http://ladpw.org.wrd)

Well Construction

- Perforated Intervals

Lithology

- Clay/Silt
- Gravel
- Gravelly Clay
- Sandy Clay
- Sand
- Bedrock

Figure 2 - 3
Hyrdogeologic Cross-Section B-B'
Area 3 Field Sampling Plan

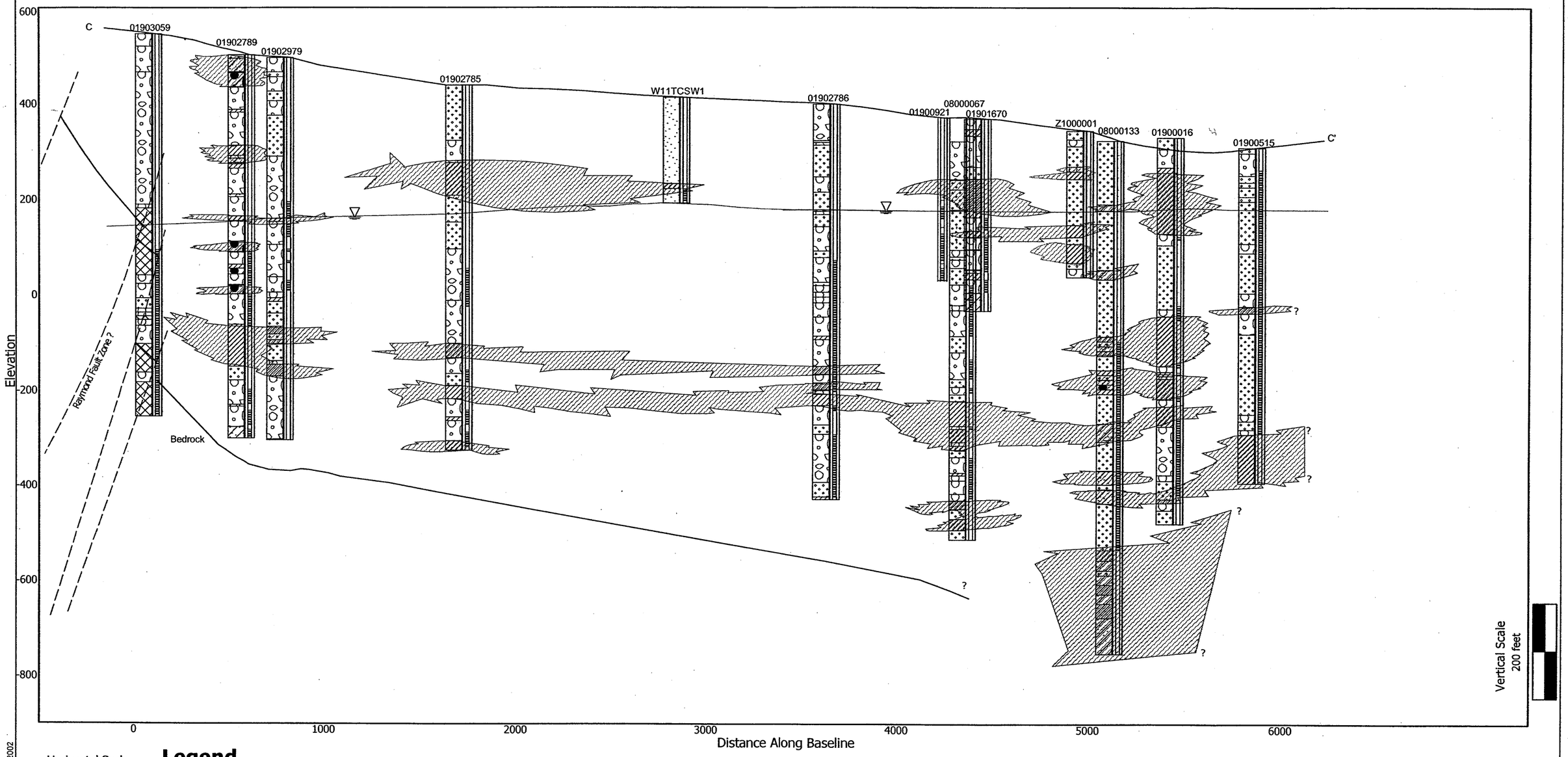

Horizontal Scale
500 feet

Legend

Predominant Lithology

- Mostly Clay/Silt
- Mostly Sand/Gravel

Well Construction

- Perforated Intervals

Lithology

- Clay/Silt
- Gravel
- Gravelly Clay
- Sandy Clay
- Sand
- Bedrock

Peizometric surface, based on depth to water measurements between October and December 2001 (Source: Los Angeles County Department of Public Works, August 2002, http://ladpw.org.wrd)

Figure 2 - 4
Hyrdrogeologic Cross-Section C-C'
Area 3 Field Sampling Plan

\\IS_Projects\gint\transfer\ ALAA200209_CC.GDW 08/28/2002

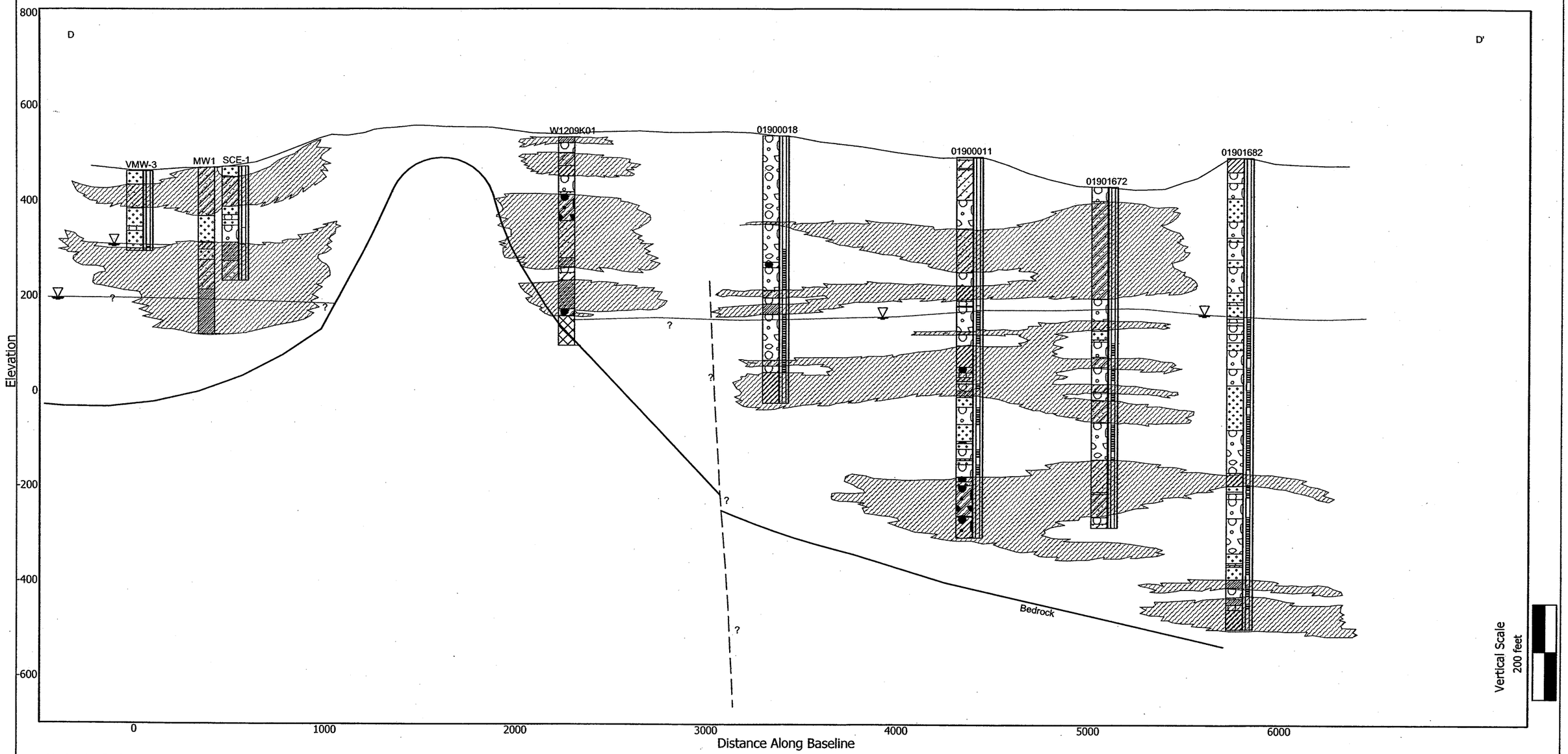

Horizontal Scale
500 feet

Legend

Predominant Lithology

- Mostly Clay/Silt
- Mostly Sand/ Gravel

Well Construction

- Perforated Intervals

Lithology

- Clay
- Gravel
- Gravelly Clay
- Sandy Clay
- Sand
- Bedrock

Peizometric surface, based on depth to water measurements between October and December 2001 (Source: Los Angeles County Department of Public Works, August 2002, http://ladpw.org.wrd)

Figure 2 - 5
Hydrogeologic Cross-Section D-D'
Area 3 Field Sampling Plan

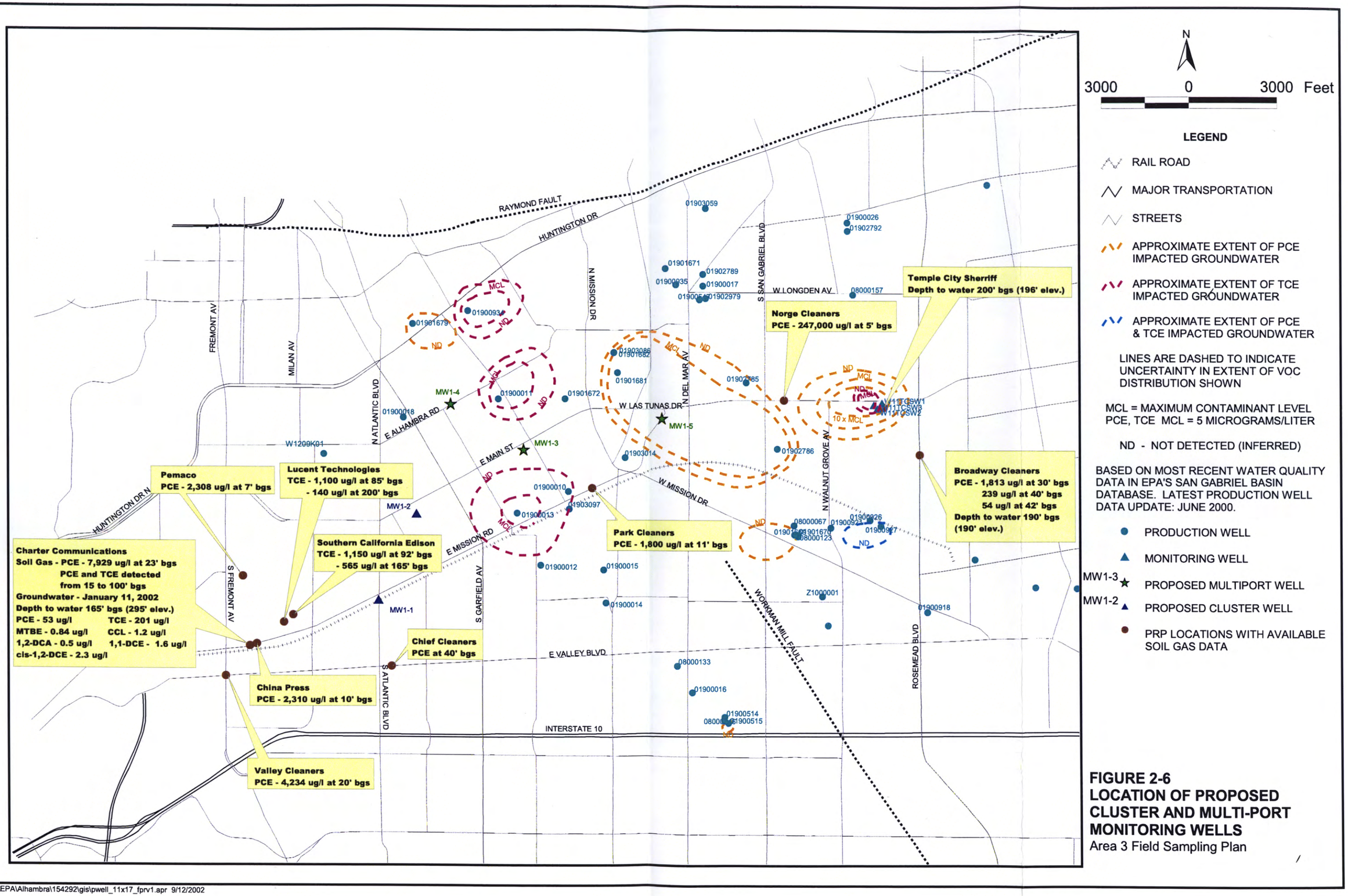

FIGURE 2-6
LOCATION OF PROPOSED CLUSTER AND MULTI-PORT MONITORING WELLS
Area 3 Field Sampling Plan

H:\EPA\Alhambra\154292\gis\pwell_11x17_fprv1.apr 9/12/2002

Table 2-1 - Selected Concentrations of Contaminants of Concern
NPL Area 3, San Gabriel Valley

Well Information			Contaminant of Potential Concern Concentration				
Name	Recordation Number	Status	Contaminant	Historic High		Recent	
				Value	Date	Value	Date
Adams Ranch Mutual Water Company							
01	01902106	Not in service - reason unknown	Nitrate	44	02/05/1997	44	02/05/1997
			TCE	1.5	06/26/1989	0.5U	02/05/1997
02	01902689	Not in service - reason unknown	PCE	2.2	05/12/1988	2.2	05/12/1988
			TCE	4.1	01/11/1980	0.5U	05/12/1988
California American Water Company - San Marino System							
GUESS	01900918	Producing	Carbon Tetrachloride	1	05/01/1985	0.5U	08/10/99
			Methylene Chloride	12	05/19/1987	0.5U	08/10/99
			Nitrate	26	02/16/1987	12	11/07/1994
			PCE	3	06/10/1999	2.8	06/15/00
			TCE	4.3	09/18/1998	3.8	06/15/00
			TDS	292	04/28/1986	260	11/07/1994
1954 (Mission View)	01900920	Producing	Chloroform	20.5	08/11/1997	0.5U	08/10/99
			Nitrate	20	02/16/1987	12	11/07/1994
			PCE	0.15	08/03/1982	0.5U	08/10/99
			TDS	356	05/15/1989	248	11/07/1994
1948 GRAND	01900926	Producing	Nitrate	20	07/21/1986	4.8	11/07/1994
			TCE	4	10/07/1998	0.5U	06/15/00
			TDS	244	10/09/1990	232	11/07/1994
1957 ROSEMEAD	01900927	Producing	Chloroform	0.8	03/06/1990	0.5U	08/10/99
			Methylene Chloride	6	05/19/1987	0.5U	08/10/99
			Nitrate	26	02/16/1987	13.9	11/07/1994
			PCE	0.8	06/30/1999	0.6	06/15/00
			TCE	3.3	06/30/1999	2.8	06/15/00
			TDS	256	11/07/1994	256	11/07/1994
1947 (Roanoke)	01900934	Producing	Chloroform	1.1	03/06/1990	0.5U	08/10/99
			Nitrate	39	12/18/1989	20.2	05/25/1994
			PCE	1.2	04/26/1990	0.5U	08/10/99
			TCE	4.8	03/11/1998	5	06/15/00
			TDS	412	10/09/1990	320	12/13/1993
1925 (Longden)	01900935	Not in service - nitrate contamination	Nitrate	106	12/18/1989	61.1	11/07/1994
			PCE	0.19	08/03/1982	0.5U	08/10/99
			TCE	0.17	08/03/1982	0.5U	08/10/99
			TDS	416	11/07/1994	416	11/07/1994
1968 (Del Mar)	01903059	Producing	Nitrate	21	01/23/1989	7.69	11/07/1994
			TDS	228	10/09/1990	220	11/07/1994
RICHARDSON-1	01900921	Not in service - reason unknown	Nitrate	29	01/15/1990	3.9	10/09/1990
			TCE	0.25	09/10/1981	0.5U	10/11/1994
			TDS	272	10/09/1990	272	10/09/1990
City of South Pasadena							
GRAVES 2	01901679	Producing	1,1,1-TCA	1.8	05/11/1988	0.5U	12/23/99
			Carbon Tetrachloride	1	09/06/1995	0.5U	06/19/00
			Methylene Chloride	4.8	06/13/1989	0.5U	12/23/99
			Nitrate	48.4	04/25/1995	48.4	04/25/1995
			PCE	5.5	05/15/1998	3.5	06/19/00
			TDS	410	04/19/1988	370	04/25/1995
WILSON 2	01901681	Producing	1,1,1-TCA	0.5	03/04/1988	0.5U	08/25/99
			Chloroform	0.95	01/19/1987	0.5U	08/25/99
			Nitrate	83.6	04/20/1994	83.6	04/20/1994
			PCE	23	01/07/1988	9.8	06/19/00
			TCE	4.1	03/04/1999	3.4	06/19/00
			TDS	400	04/09/1986	360	04/20/1994
WILSON 3	01901682	Producing	Chloroform	5.8	09/04/1998	0.5U	08/25/99
			Nitrate	10.8	09/18/1992	10.12	04/06/1993
			PCE	19	05/31/1989	4	06/19/00
			TDS	250	04/06/1993	250	04/06/1993
WILSON 4	01903086	Producing	Nitrate	10.8	09/26/1989	9.2	09/08/1993
			PCE	8.1	06/19/00	8.1	06/19/00
			TDS	200	04/24/1990	170	04/06/1993

Table 2-1 - Selected Concentrations of Contaminants of Concern
NPL Area 3, San Gabriel Valley

Well Information			Contaminant of Potential Concern Concentration				
Name	Recordation Number	Status	Contaminant	Historic High		Recent	
				Value	Date	Value	Date
City of Alhambra							
8 MOELLER	01900010	Inactive	Nitrate	30.8	08/25/1989	27.5	06/08/1994
			TCE	5.3	06/16/1999	4.76	03/16/00
			TDS	275	05/21/1985	268.5	06/07/1994
09	01900011	Inactive	Nitrate	57.3	06/22/1993	48.2	06/08/1994
			TCE	5.41	03/16/00	5.41	03/16/00
			TDS	352.6	06/22/1993	352.6	06/22/1993
10	01900012	Producing - Irrigation	Nitrate	23.6	07/19/1988	23.6	07/19/1988
			TCE	13.1	08/24/1982	1U	11/23/1987
			TDS	346.9	07/19/1988	346.9	07/19/1988
12	01900013	Not in service - VOC contamination	1,1-DCE	1.2	02/21/1985	0.5U	02/03/1995
			Carbon Tetrachloride	0.13	04/01/1981	0.5U	02/03/1995
			Chloroform	0.5	02/03/1995	0.5	02/03/1995
			Cis-1,2-DCE	6.3	02/03/1995	6.3	02/03/1995
			Nitrate	34.1	08/25/1989	33.5	06/09/1994
			PCE	1.8	08/04/1987	0.5U	02/03/1995
			TCE	18.4	02/03/1995	18.4	02/03/1995
			TDS	319	04/03/1990	306.3	04/13/1993
13	01900014	Producing	Methylene Chloride	7.6	05/20/1987	0.5U	08/27/1998
			Nitrate	39	08/24/1989	31.6	05/04/1995
			TDS	353.8	04/25/1989	287	05/04/1995
14	01900015	Producing	Nitrate	35.7	08/24/1989	23.8	05/05/1995
			TCE	2.3	11/20/1990	0.5U	09/22/99
			TDS	292.8	04/11/1989	226	05/05/1995
15	01900016	Producing	Methylene Chloride	3.1	05/20/1987	0.5U	09/22/99
			Nitrate	11.9	08/24/1989	10.5	05/04/1995
			TDS	224.2	04/11/1989	197	05/04/1995
LONGDEN 2	01900017	Producing	Methylene Chloride	4.3	05/20/1987	0.5U	09/22/99
			Nitrate	50.4	04/15/1986	28.8	05/04/1994
			TDS	291	04/15/1986	249.1	05/04/1994
GARFIELD	01900018	Not in service - reason unknown	1,1,2,2-TCA	0.97	11/23/1987	0.5U	09/17/1993
			1,2-DCE	0.85	08/24/1982	0.85	08/24/1982
			Carbon Tetrachloride	0.14	04/01/1981	0.5U	09/17/1993
			Nitrate	648	08/22/1983	48.8	08/19/1992
			PCE	0.48	11/23/1987	0.5U	09/17/1993
			TCE	16	09/24/1980	0.5U	09/17/1993
			TDS	468	05/21/1985	389.7	06/04/1991
LONGDEN-1	01902789	Producing	Nitrate	14.3	07/24/1990	9.8	08/10/1993
			PCE	0.3	07/08/1981	0.5U	08/27/1998
			TCE	1.5	01/10/1980	0.5U	08/27/1998
			TDS	230	07/31/1984	199	08/10/1993
11	01903014	Producing	Nitrate	41.3	07/30/1990	33.3	06/09/1994
			PCE	1.8	10/23/1996	0.9	06/16/1999
			TCE	4.2	05/15/1989	0.5U	06/16/1999
			TDS	247.8	04/03/1990	241.3	08/10/1993
07 - INACTIVE	01903097	Not in service - VOC contamination	Carbon Tetrachloride	0.6	02/21/1985	0.5U	01/16/1997
			Chloroform	0.8	01/26/1995	0.5U	01/16/1997
			Cis-1,2-DCE	0.8	05/16/1989	0.5U	01/16/1997
			Nitrate	51.6	08/25/1989	36.1	06/08/1994
			TCE	13.4	08/13/1991	0.5U	02/26/1999
			TDS	366	04/11/1989	346	07/13/1993
San Gabriel Country Club							
01	01900547	Not in Service, Reason Unknown	na				
02	01902979	Producing	Methylene Chloride	3.8	05/05/1987	1U	08/18/87
			Toluene	0.6	05/05/1987	0.6J	05/05/1987

Table 2-1 - Selected Concentrations of Contaminants of Concern
NPL Area 3, San Gabriel Valley

Well Information			Contaminant of Potential Concern Concentration				
Name	Recordation Number	Status	Contaminant	Historic High		Recent	
				Value	Date	Value	Date
San Gabriel County Water District							
BRA 5	01901669	Producing	Chloroform	0.2	01/10/1985	0.5U	09/23/99
			Nitrate	79	06/29/1993	55.8	06/28/1994
			PCE	1.9	02/08/1999	0.9	06/13/00
			TCE	0.88	01/13/1997	0.5U	06/13/00
			TDS	369	08/20/1990	335.9	06/29/1993
07	01901671	Producing	Chloroform	0.5	06/21/1989	0.5U	09/23/99
			Nitrate	35	04/19/1994	34.5	08/24/1994
			TCE	0.01	01/12/1980	0.5U	09/23/99
			TDS	260	06/26/1991	244.9	06/23/1994
08	01901672	Not in service - reason unknown	Nitrate	19	06/13/1978	1.4	08/24/1993
			PCE	0.26	08/31/1981	0.5U	03/28/1991
			TCE	0.3	08/31/1981	0.5U	03/28/1991
			TDS	700	11/21/1990	670.8	08/24/1993
09	01902785	Producing	Chloroform	0.9	12/16/1996	0.5U	09/23/99
			Nitrate	38	12/29/1983	16.7	11/17/1994
			PCE	0.7	02/08/1999	0.5U	06/13/00
			TDS	280	11/02/1988	198	11/17/1994
10	01902786	Not in service - reason unknown	1,1-DCE	3.95	02/02/1987	0.2U	08/13/1993
			Nitrate	38.6	08/13/1993	36.1/38.6	08/13/1993
			PCE	15	08/13/1993	15	08/13/1993
			TCE	0.09	01/12/1980	0.25U	08/13/1993
			TDS	260	06/06/1984	252/237.1	08/13/1993
11	08000067	Producing	Chloroform	0.5	06/21/1989	0.5U	09/23/99
			Methylene Chloride	4.5	05/02/1985	0.5U	09/23/99
			Nitrate	19.6	06/29/1993	9.8	06/28/1994
			PCE	1	09/15/1989	0.5U	09/23/99
			TCE	0.03	01/12/1980	0.5U	09/23/99
			TDS	217.8	06/29/1993	217.8	06/29/1993
#12	08000123	Producing	Chloroform	0.4	12/17/1990	0.5U	09/23/99
			Nitrate	2.3	12/29/1993	1.5	06/08/1994
			TCE	0.8	06/24/1999	0.5U	06/13/00
			TDS	180	12/17/1990	147.4	12/15/1993
14	08000133	Producing	Nitrate	2.8	06/14/1991	1.5	06/23/1994
			TDS	168.6	06/23/1994	168.6	06/23/1994
Southern California Edison Company							
1EB86	01900342	Not is Service - Reason Unknown					
Southern California Water Company							
SAXON 3	01900514	Producing	Nitrate	12.4	08/15/1994	12.4	08/15/1994
			PCE	0.77	08/08/1996	0.5U	08/13/99
			TCE	0.03	01/14/1980	0.5U	08/13/99
			TDS	207.1	09/19/1989	204	08/15/1994
SAXON 1	01900515	Producing	Methylene Chloride	2.2	04/25/1989	0.5U	08/26/1997
			Nitrate	26.4	01/09/1990	3	08/15/1994
			PCE	1.4	04/18/1997	0.9	12/03/1997
			TDS	249.4	01/09/1990	228	08/15/1994
ENCINITAS 1	01902024	Standby	Nitrate	25.6	08/12/1994	25.6	08/12/1994
			PCE	1.7	06/02/1999	1.6	05/24/00
			TCE	10.2	06/02/1999	9.9	05/24/00
			TDS	248	08/12/1994	248	08/12/1994
ENCINITAS 2	01902035	Standby	Methylene Chloride	3.2	04/25/1989	0.5U	08/31/99
			Nitrate	9.8	08/12/1994	9.8	08/12/1994
			PCE	1.6	06/02/1999	1.4	05/24/00
			TCE	6.7	02/24/1997	4.6	05/24/00
			TDS	243.6	01/09/1990	224	08/12/1994
ENCINITAS 3	08000073	Producing	2-Butanone	9.6	09/09/1998	5U	08/31/99
			Chloroform	2.9	09/09/1998	0.5U	08/31/99
			Methylene Chloride	4.3	04/25/1989	0.5U	08/31/99
			Nitrate	43.2	07/23/1993	15	08/12/1994
			PCE	2.2	05/31/00	2.2	05/31/00
			TCE	7.7	04/07/1998	6.3	05/31/00
			TDS	276.9	12/15/1987	230	08/12/1994

Table 2-1 - Selected Concentrations of Contaminants of Concern
NPL Area 3, San Gabriel Valley

Well Information			Contaminant of Potential Concern Concentration				
Name	Recordation Number	Status	Contaminant	Historic High		Recent	
				Value	Date	Value	Date
SAXON 4	08000146	Producing	Nitrate	7.6	08/15/1994	7.6	08/15/1994
			TDS	194	08/15/1994	194	08/15/1994
Sunny Slope Water Company							
8	01900026	Producing	4-Methyl-2-Pentanone	1	04/03/1987	5U	08/26/99
			Nitrate	23	05/06/1985	12.1	03/27/1995
			TCE	0.03	01/11/1980	0.5U	08/26/99
			TDS	270	06/08/1989	176	03/27/1995
9	01902792	Producing	Nitrate	20.7	09/05/1989	10.5	09/26/1994
			TDS	275	08/16/1990	204	09/26/1994
10	08000048	Not in service - reason unknown	Nitrate	44.1	03/11/1994	29.7	06/28/1994
			TDS	300	06/14/1984	270.7	03/11/1994
13	08000157	Producing	VOCs	ND	03/13/1997	ND	05/30/00
Temple City Sheriff Station Monitoring Wells							
MW-1	W11TCSW1	Observation	1,2-DCA	0.5	06/23/1993	0.5U	04/14/94
			Benzene	8.8	06/23/1993	0.5U	04/14/94
			Total Xylenes	2.5	06/23/1993	1.0U	04/14/94
			PCE	480	04/14/1994	480	04/14/94
			TCE	4.6	02/24/1993	0.5U	04/14/94
MW-2	W11TCSW2	Observation	1,2-DCA	64	10/12/1993	15	04/14/94
			Benzene	440	10/12/1993	11	04/14/94
			PCE	150	10/12/1993	120	04/14/94
			TCE	2.3	01/31/1994	1.6	04/14/94
			Toluene	140	10/12/1993	0.5U	04/14/94
			Total Xylenes	176	10/12/1993	1.0U	04/14/94
MW-3	W11TCSW3	Observation	1,2-DCA	30	04/14/1994	30	04/14/94
			Benzene	100	04/14/1994	100	04/14/94
			PCE	470	04/14/1994	470	04/14/94
			TCE	6.8	04/14/1994	6.8	04/14/94
			Toluene	10	10/12/1993	2.8	04/14/94
			Total Xylenes	32.2	06/23/1993	1.7	04/14/94

Acronyms:

PCE: Tetrachloroethylene
TCE: Trichloroethylene
DCE: Dichloroethylene
DCA: Dichloroethane
TCA: Trichloroethane
TDS: Total Dissolved Solids (mg/L)
na: data are not available

Flags:
U: undetected
J: estimated

Maximum Contaminant Levels (MCLs):

PCE, TCE	5 micrograms per liter (ug/L)
1,1,1-TCA	200 ug/L
1,1-DCE	6 ug/L
1,2-DCE	none
Cis-1,2-DCE	6 ug/L
Trans-1,2-DCE	10 ug/L
1,1,2,2-TCA	1 ug/L
2-Butanone	none
4-Methyl-2-Pentanone	none
Benzene	1 ug/L
Carbon Tetrachloride	0.5 ug/L
Chloroform	100 ug/L
Methylene Chloride	5 ug/L
Toluene	150 ug/L
Total Xylenes	1,750 ug/L
Nitrate	45 milligrams per liter (mg/L)

Section 3
Maps

The following is a list of maps and figures pertinent to this FSP.

- Figure 1-1
  - — Map of the San Gabriel Basin showing the location of NPL Area 3
- Figure 2-1
  - — Hydrogeological map of Area 3
- Figure 2-2
  - — Hydrogeologic cross section A-A′
- Figure 2-3
  - — Hydrogeologic cross section B-B′
- Figure 2-4
  - — Hydrogeologic cross section C-C′
- Figure 2-5
  - — Hydrogeologic cross section D-D′
- Figure 2-6
  - — Location of proposed cluster and MP monitoring wells and VOC contamination
- Figure 6-1
  - — Typical MP monitoring well construction
- Figure 6-2
  - — Typical monitoring well surface completion
- Figure 6-3
  - — Typical cluster monitoring well construction

This page intentionally left blank.

Section 4
Rationale for Sample Locations, Number of Samples, and Laboratory Analyses

This section presents a description of sampling activities that EPA is planning to conduct as a part of the Area 3 RI. As discussed in part in Section 1, and in the DQOs included in the companion QAPP (EPA, 2002), the sampling activities will address the following:

- Groundwater monitoring to assess the nature and extent of VOC groundwater contamination
- Assist in identifying source(s) of groundwater contamination
- Assess whether other contaminants are present
- Sampling to determine the proper transportation and disposal of the investigation-derived wastes

The rationale for the sample locations, number of samples, and laboratory analyses is presented below.

4.1 Groundwater Monitoring

VOCs have been detected in production wells within Area 3. As part of this RI, two cluster wells (MW1-1 and MW1-2) and three MP wells (MW1-3, MW1-4, and MW1-5) will be installed to assist in assessing the lateral and vertical extent of contamination within Area 3, the presence of other contaminants, and to identify potential contaminant source areas.

4.1.1 Sampling Locations

Figure 2-6 shows the locations of the proposed cluster and MP monitoring wells in Area 3. Note that since there are several screen intervals at each cluster and MP monitoring well location, the number of wells and screen intervals is greater than the number of sampling locations shown in Figure 2-6.

The cluster wells (MW1-1 and MW1-2) are located in the western portion of Area 3 to collect groundwater data between existing production wells with VOC contamination and suspected upgradient PRP facilities. The proposed screen depths for these wells are based on depths to groundwater in production wells in the central part of Area 3, east of the proposed cluster well locations (Figure 2-1). The cluster well screen depths are relatively shallow compared to the proposed MP wells. The purpose for this is to target the shallower portion of the alluvial aquifer where VOC concentrations intermediate between those observed in production wells and shallow PRP facility monitoring wells may occur (Figure 2-5). Proposed screen intervals for cluster and multiport monitoring wells are shown in Table 4-1.

TABLE 4-1
Proposed Screen Intervals for Cluster and Multiport Monitoring Wells

Well Name	MW1-1	MW1-2	MW1-3	MW1-4	MW1-5
Well Type	Cluster	Cluster	Multiport	Multiport	Multiport
Screen Intervals (feet bgs)	320 to 340 390 to 410	335 to 355 405 to 425	360 to 370 440 to 450 520 to 530 600 to 610 680 to 690 770 to 780	380 to 390 460 to 470 540 to 550 620 to 630 700 to 710 770 to 780	350 to 360 440 to 450 520 to 530 600 to 610 680 to 690 770 to 780

The proposed MP wells are generally located in areas of VOC contamination in deep production wells with long and/or multiple screen intervals and will be constructed with six depth discrete groundwater sampling intervals. Groundwater data collected from the depth discrete intervals will be used to assess the vertical nature and extent of contamination in Area 3. The depth of these wells generally is consistent with the deepest production wells in Area 3 (see Figures 2-2 through 2-5).

4.1.2 Number of Samples

An initial groundwater sampling event for VOCs and dissolved metals will be conducted roughly 2 weeks after the completion of each monitoring well. Ongoing groundwater sampling events will be conducted on a quarterly basis for VOCs for the remainder of a 2-year period, for a total of eight sampling events. These sampling events will be used to evaluate temporal changes in the nature and extent of VOC contamination in Area 3 that might be related to groundwater production, to evaluate any VOC exceedances of regulatory limits, and assist in identifying contaminant source areas. It is anticipated that 2 years data will be sufficient to establish trends in water quality changes. During the third sampling event, additional groundwater samples will be collected at each well for semivolatile organic compounds (SVOCs), NDMA, perchlorate, nitrate, 1,4-dioxane, hexavalent chromium, and 1,2,3-trichloropropane. These samples will be collected to evaluate regulatory level exceedances and to assess the need for continued monitoring or future treatment for those analytes. Future sampling for these analytes will depend on the results of the third sampling event. At least one additional confirmation sample will be collected if the analyte is detected.

In addition to groundwater samples, field QA samples will be collected in the form of duplicates, blanks, and matrix spike/matrix spike duplicate (MS/MSD) samples. At a minimum, one field duplicate will be collected for each analysis for every 10 wells/screens sampled or a one per week, whichever is larger. An attempt will be made to collect duplicate samples from a well that is expected, or known to be, moderately contaminated.

One blank will be collected for every analyte every day that a sample is taken. Field blank samples will be collected to check for possible cross-contamination of groundwater samples from the point of sample collection to analysis of the samples by the laboratory. Equipment (blank) samples will be collected to check for possible cross-contamination of groundwater

samples after decontamination of common equipment used to collect samples from a number of different wells or screens in a given day.

Temperature blanks will be used to determine the samples have been maintained at the appropriate temperature of 4 degrees Celsius (°C). Temperature blanks will be prepared each day samples are collected and will be included with each cooler of samples sent to the laboratory. Laboratory QC samples (MS/MSDs) will be identified for all analyses during each sampling event. One MS/MSD sample per analyte will be identified for each 20 samples collected.

4.1.3 Laboratory Analyses

Analysis of VOCs with low-detection limits will be used to assess the magnitude of groundwater contamination in the new monitoring wells and to determine whether any of the VOCs detected exceed regulatory limits. The rationale for the VOC analyses is that VOCs are the most prevalent contaminants in production wells in Area 3. Sampling for VOCs will be included in each of the eight sampling events. In addition, sampling for dissolved metals, SVOCs, NDMA, perchlorate, nitrate, 1,4-dioxane, hexavalent chromium, and 1,2,3-trichloropropane will be conducted during one sampling event to evaluate exceedances of regulatory limits and to assess the need for continued monitoring or future treatment for these analytes. The rationale for these analyses is that many of the analytes have maximum contaminant levels, action levels, or other regulatory limits, have been detected in other areas of the San Gabriel Basin where VOCs are present, and require significantly different treatment methods for removal from groundwater compared to VOCs.

4.2 Investigation-Derived Wastes

Liquid and solid investigation-derived wastes will be generated during drilling, development, and sampling of the proposed monitoring wells. Each of these wastes may potentially be contaminated with VOCs. Samples of the drill cuttings, drilling fluids and development water will be collected from these storage units prior to removal from the site to evaluate the proper storage, disposal, or discharge of the waste materials. The following subsections describe each of the wastes and the sampling procedures that will be used to characterize the wastes.

4.2.1 Drill Cuttings and Fluids

Drill cuttings and fluids will be generated during drilling of the monitoring wells,. The drill cuttings will be contained in roll-off bins stored at each well site. Two grab samples will be collected for every 50 cubic yards of drill cuttings. Samples will be collected from coarse-grained materials, which are likely to be the pathways for contamination migration in the subsurface, or will be collected from bins which contain cuttings representative of the dominant soil material encountered during drilling. In addition, one laboratory QC sample and one duplicate will be analyzed for the drill cuttings. In addition, the number of field blank samples collected will be equal to 10 percent of the drill cutting and drilling fluid samples collected or one per week, whichever is greater. In the past, attempts have been made to use photoionization detector (PID) organic vapor reading to select cuttings for

analysis. However, based on previous experience in the Whittier Narrows OU, no organic vapors have been detected during monitoring of drill cuttings during drilling and logging of the cuttings. Thus PID organic vapor monitoring or readings are unlikely to be useful for screening of cuttings for sample collection.

Drilling fluids (water and bentonite) will be containerized in Baker tanks or equivalent and stored onsite at each well location. One sample of drilling fluid will be collected per tank. It is likely that the drilling fluid in each tank will be fairly homogeneous as a result of recirculation, mixing, and agitation during the drilling process. Thus, one sample per tank should be sufficient in characterizing the fluids in the tank. Since drilling fluid tends to separate into the heavier mud at depth and lighter water near the top of the tank, the sampling bailer will be lowered near the bottom of the Baker tank to collect a fluid sample with a high solids content.

The drill cuttings and fluids will be analyzed for the following, according to local landfill requirements:

- pH
- Flashpoint
- Total Petroleum Hydrocarbons – gasoline (TPHg)
- Total Petroleum Hydrocarbons – diesel (TPHd)
- VOCs
- Total threshold limit concentration (TTLC) Metals

The analyses listed above have been performed on wastes generated previously during well installation activities associated with VOC contamination in the Whittier Narrows and South El Monte OUs and none of the wastes have been classified as hazardous. A quick turn-around time (7 days) will be necessary for characterization and disposal of the drill cuttings and fluids to avoid costs associated with long-term storage of the wastes.

4.2.2 Development and Purge Water

During development and sampling of the wells, water will be generated that has the potential to be contaminated. Water generated from well development activities will be contained in Baker, or equivalent, tanks, stored temporarily onsite. One groundwater sample per tank will be collected. It is likely that the water in each tank will be fairly homogeneous as a result of mixing and agitation during the well development and sampling processes. Thus, one sample per Baker tank should be sufficient in characterizing the fluids in the Baker tank. In addition, one laboratory QC sample and one duplicate will be analyzed for well development water from the wells to be drilled. The number of field blank samples collected will be equal to 10 percent of the development and purge water samples collected or one per week, whichever is greater. When collecting the sample from a tank, the sampling bailer will be lowered to the middle of the to avoid any water that may have been affected by evaporation at the top of the water column.

Well development and purge water samples will be analyzed for the following:

- VOCs
- SVOCs
- 1,2,3-Trichloropropane

- NDMA
- Perchlorate
- Nitrate
- 1,4-Dioxane
- Hexavalent Chromium
- Dissolved Metals

The rationale for the chemical analyses listed above is based on review of regulatory levels, as described in the companion QAPP (EPA, 2002). A quick turn-around time (3 days) will be necessary for characterization and disposal of the development and purge water to avoid costs associated with long-term storage of the wastes.

This page intentionally left blank.

Section 5
Request for Analyses

5.1 Analytical Parameters

This section presents the requests for analyses (RFAs) for the drill cuttings, drilling mud, well development water, and groundwater samples that will be collected during the RI field activities. Tables 5-1a and 5-1b summarize the analytical parameters, test methods, and target detection limits for the well development and groundwater samples, and drill cuttings and mud, respectively. Unless otherwise noted, laboratory analyses will be performed by EPA's Region IX laboratory. In some instances, (such as short sample holding times or unique analytical method requirements), a laboratory other than EPA's Region IX laboratory will be used.

Table 5-2. Tables 5-2a through 5-2c represent the RFAs for the new monitoring wells in NPL Area 3. Because there are three types of groundwater sampling events (initial, third quarter, and typical quarterly), three tables are included. Table 5-2a is the RFA for the initial sampling event at the new wells. The initial sampling event will be conducted within approximately 2 weeks of completion of a well. Table 5-2b is the RFA for a typical quarterly event, which will involve sampling for VOCs only. Table 5-2c is the RFA for the third sampling event. The third sampling event will be approximately 6 months after installation of the wells and will involve a more comprehensive list of analyses compared to the initial or typical quarterly sampling events.

Table 5-3a. Table 5-3a is the RFA for collection of samples for analyses of drill cuttings and drilling mud. As discussed in the DQOs presented in Appendix A of the companion QAPP (EPA, 2002), these samples will be used to determine if the drill cuttings and/or the drilling mud are to be disposed of as hazardous or nonhazardous waste. The laboratory is expected to meet the specified detection limits for these compounds shown in Table A-3 of the companion QAPP (EPA, 2002). Drill cuttings and drilling mud samples from each well will be collected and analyzed according to Table 5-3a. The number of blank samples collected will be equal to 10 percent of the total drill cutting and drilling mud samples collected, or one per week, whichever is greater. The blank samples will be analyzed according to Table 5-3a. Drilling of the 4-inch monitoring wells is tentatively scheduled for October 2002 through April 2003.

Table 5-3b. Table 5-3b is the RFA for collection of quick turn around time (i.e., 72 hours) samples for analyses of well development water. As discussed in the DQOs presented in Appendix A of the companion QAPP (EPA, 2002), these samples will be used to determine if development water is to be disposed of as hazardous or nonhazardous waste. One duplicate sample will also be collected. The number of blank samples collected will be equal to 10 percent of the total development and purge water samples collected, or one per week, whichever is greater. The blank samples will be analyzed according to Table 5-3b. Drilling of the 4-inch monitoring wells is tentatively scheduled for October 2002 through April 2003.

TABLE 5-1a
Analytical Parameters, Methods, and Detection Limits for Groundwater and Well Development Samples

Parameter	Method [b]	Target Detection Limit
Organics		
VOCs,[a]	EPA 524.2 (SOP 354)[b]	(c), (g)
1,2,3-Trichloropropane	Cal DHS[b]	0.005 µg/L
Semivolatile Organic Compounds	EPA 8270[b]	(e)
1,4-Dioxane	EPA 8270/SIM[b,d] (Modified SOP 315)	1.0 µg/L
NDMA	Modified EPA Method 1625	0.002 µg/L
Inorganics		
Hexavalent Chromium	EPA 218.6[d]	0.2 µg/L
Metals	EPA 200.7[d,b] (SOP 505), EPA 200.8[e,b] (SOP 507), EPA 200.9 (SOP 511), EPA 245.1[d,b] (SOP 515)	(f)
Perchlorate	EPA 314[b,d] (SOP 531)	2.0 µg/L
Nitrate	EPA 300.0 (SOP 530)	0.1 mg/L
Field Parameters		
pH	Field/manual	N/A
Temperature	Field/manual	N/A
Turbidity	Field/manual	N/A
Electrical Conductivity	Field/manual	N/A

[a] VOCs = Volatile organic compounds.
[b] EPA Region IX SOP provided in Appendix A. For other methods or analytes project DQI or CRF is provided in Appendix A, as these analyses may be performed by laboratories other than EPA Regional laboratory or its contractors.
[c] Detection limits will be at 1 ug/L for all except 0.5 ug/l for vinyl chloride, carbon tetrachloride, 1,2-dichloroethane, cis and trans-1,3-dichloropropene.
[d] U.S. Environmental Protection Agency, 1979. *Methods for Chemical Analysis of Water and Wastes*, EPA-600/4-79-020, revised March 1983; U.S. Environmental Protection Agency, *Test Methods for Evaluating Solid Waste*, SW846.
[e] Detection limits will be 10 ug/L.
[f] Detection limits provided in Appendix A along with methods for the specific metals.
[g] For development water, detection levels and quality control criteria are per standard operating procedures presented in Appendix A.

TABLE 5-1b
Analytical Parameters, Methods, and Detection Limits for Drill Cuttings and Drilling Mud

Parameter	Method [b]	Target Detection Limit
Volatile Organics	EPA 5035/8260 (SOP 305)	(a)
Total Petroleum Hydrocarbons (Ca LUFT)	EPA 8051M (Ca LUFT)	0.5 mg/L
TTLC Metals (Ca Title 22)	EPA 6010/7471 (SOPs 405,503, and 517)	(a)
Flashpoint	EPA 1010	5° F
pH	EPA 9045 (SOP 582)	NA

[a] Detection levels and quality control criteria are per standard operating procedures presented in Appendix A.
[b] EPA Region IX SOP provided in Appendix A. For other methods, project DQI or CRF is provided in Appendix A, as these analyses may be performed by laboratories other than EPA Regional laboratory or its contractors.

5.2 Schedule

Sampling of investigation-derived wastes is expected to begin in November 2002, will occur periodically (see Tables 5-3a and 5-3b), and will last through March 2003.

An initial groundwater sampling event for VOCs and dissolved metals will be conducted within approximately two weeks completion of each monitoring well. It is anticipated the initial sampling event will occur in two phases: one for wells MW1-1, MW1-2, and MW1-3 during December 2002 and one for wells MW1-4 and MW1-5 during February 2003. Ongoing groundwater sampling events will be conducted on a quarterly basis for VOCs for 2 years, for a total of eight sampling events, with the last event occurring in January 2005.

During the third sampling event, anticipated to take place in the summer of 2003, additional groundwater sampling will be conducted at each well for SVOCs, NDMA, perchlorate, nitrate, 1,4-dioxane, hexavalent chromium, and 1,2,3-trichloropropane. Additional or continued sampling for these analytes will depend on the results of the third sampling event. For example, one additional confirmation sample will be collected if an analyte is detected in a well.

A request for laboratory sample analysis (RLSA) and data evaluation form (Appendix E) will be completed and submitted to the EPA Region IX Regional Sample Control Center (RSCC) Coordinator 4 weeks in advance of each sampling event, with copies going to the Area 3 RPM and the sampling team leader. A few laboratories other than EPA Region IX have been identified (Tables 5-2 and 5-3) to perform the required analyses based on experience in other OUs in the San Gabriel Valley. The laboratory selection and management process will follow overall RAC IX guidance. Selection of laboratories will be based on past projects for the Region and review of laboratory standard operating procedures, past audit reports, example sample data packages, copies of certifications, or method detection limits (MDL) studies requested during competitive selection of the laboratories (e.g., the request for proposal process). Additionally, blind performance evaluation (PE) samples will be submitted to the laboratories prior to and during the initial stages of the field work.

However, these laboratories will only be utilized if the Region IX Quality Assurance Office (QAO) is unable to procure the required laboratory analytical services. The RLSA to be submitted to EPA prior to each sampling event will include an RFA table similar to Tables 5-2 or 5-3 and will incorporate any modifications proposed from the plan outlined herein.

This page intentionally left blank.

Table 5-2a
Request for Analyses: Initial Groundwater Sampling Event
Area 3 Remedial Investigation
(Matrix = Water)

						Organics	Inorganics
Anticipated Laboratory Performing Analysis						EPA	EPA
Method						EPA 524.2 [(A)]	EPA 200.7, EPA 200.8, EPA 200.9, EPA 245.1
Specific Analyses Requested						VOCs	Dissolved Metals
Preservatives						HCl to pH <2; chill to 4C; no headspace	0.45-um filter, HNO3 to pH<2, chill to 4° C
Analytical Holding Time						Hold <14 days	<28 days for Hg <6 months for others
Contract Holding Time						Hold <10 days	<26 days for Hg <6 months for others
						# bottles/ analysis	
Well Number	Sample Location	Sample ID	Concentration	Schedule	Turn-Around Time	3x40 mL glass vial	1x1-L poly bottle
MW1-1 Shallow	Well Head		Low	Week 10	Rapid	X	X
MW1-1 Shallow	"	Duplicate	"	"	"	X	X
MW1-1 Deep	"	Lab QC	"	"	"	X	X
MW1-2 Shallow	"		"	"	"	X	X
MW1-2 Deep	"		"	"	"	X	X
Blank	Field		"	"	"	X	X
Blank	Temp[b]		"	"	"		
MW1-3 (zone 1)	Zone		"	"	"	X	X
MW1-3 (zone 2)	"		"	"	"	X	X
MW1-3 (zone 3)	"		"	"	"	X	X
MW1-3 (zone 4)	"		"	"	"	X	X
MW1-3 (zone 5)	"		"	"	"	X	X
MW1-3 (zone 6)	"		"	"	"	X	X
Blank	Equip.		"	"	"	X	X
Blank	Temp[b]		"	"	"		
MW1-4 (zone 1)	Zone		"	Week 21	Normal	X	X
MW1-4 (zone 2)	"		"	"	"	X	X
MW1-4 (zone 2)	"	Duplicate	"	"	"	X	X
MW1-4 (zone 3)	"	Lab QC	"	"	"	X	X
MW1-4 (zone 4)	"		"	"	"	X	X
MW1-4 (zone 5)	"		"	"	"	X	X
MW1-4 (zone 6)	"		"	"	"	X	X
Blank	Equip.		"	"	"	X	X
Blank	Temp[b]		"	"	"		
MW1-5 (zone 1)	"		"	"	"	X	X
MW1-5 (zone 2)	"		"	"	"	X	X
MW1-5 (zone 2)	"	Duplicate	"	"	"	X	X
MW1-5 (zone 3)	"		"	"	"	X	X
MW1-5 (zone 4)	"		"	"	"	X	X

Table 5-2a
Request for Analyses: Initial Groundwater Sampling Event
Area 3 Remedial Investigation
(Matrix = Water)

						Organics	Inorganics
Anticipated Laboratory Performing Analysis						EPA	EPA
Method						EPA 524.2 [(A)]	EPA 200.7, EPA 200.8, EPA 200.9, EPA 245.1
Specific Analyses Requested						VOCs	Dissolved Metals
Preservatives						HCl to pH <2; chill to 4C; no headspace	0.45-um filter, HNO3 to pH<2, chill to 4° C
Analytical Holding Time						Hold <14 days	<28 days for Hg <6 months for others
Contract Holding Time						Hold <10 days	<26 days for Hg <6 months for others
						# bottles/ analysis	
Well Number	Sample Location	Sample ID	Concentration	Schedule	Turn-Around Time	3x40 mL glass vial	1x1-L poly bottle
MW1-5 (zone 5)	▪		▪	▪	▪	X	X
MW1-5 (zone 6)	▪		▪	▪	▪	X	X
Blank	Equip.		▪	▪	▪	X	X
Blank	Temp[b]		▪	▪	▪		
Total Well Samples						22	22
Total Duplicates						3	3
Total Field/Equipment Blanks						3	3
Total Laboratory QC (MS/MSD) Samples						2	2
Total Analyses						29	29

Notes

(A) pH readings to be reported for individual samples
Temperature
EPA Region IX
Lab QC = Matrix spike/matrix spike duplicate sample set which will be twice the normal sample volume
turnaround of

Table 5-2b
Request for Analyses: Typical Quarterly Sampling Event
Area 3 Remedial Investigation
(Matrix = Water)

						Organics
Anticipated Laboratory Performing Analysis						**EPA**
Method						**EPA 524.2 [(A)]**
Specific Analyses Requested						**VOCs**
Preservatives						HCl to pH <2; chill to 4C; no headspace
Analytical Holding Time						Hold <14 days
Contract Holding Time						Hold <10 days
						# bottles/ analysis
Well Number	Sample Location	Sample ID	Concentration	Schedule	Turn-Around Time	**3x40 mL glass vial**
MW1-1 Shallow	Well Head	Lab QC	Low	Day 1	Normal	X
MW1-1 Deep	▪		▪	▪	▪	X
MW1-2 Shallow	▪		▪	▪	▪	X
MW1-2 Shallow	▪	Duplicate	▪	▪	▪	X
MW1-2 Deep	▪		▪	▪	▪	X
Blank	Field		▪	▪	▪	X
Blank	Temp[b]		▪	▪	▪	
MW1-3 (zone 1)	Zone		▪	Day 2	▪	X
MW1-3 (zone 2)	▪		▪	▪	▪	X
MW1-3 (zone 3)	▪		▪	▪	▪	X
MW1-3 (zone 4)	▪		▪	▪	▪	X
MW1-3 (zone 5)	▪		▪	▪	▪	X
MW1-3 (zone 6)	▪		▪	▪	▪	X
MW1-4 (zone 1)	▪		▪	▪	▪	X
MW1-4 (zone 2)	▪		▪	▪	▪	X
MW1-4 (zone 2)	▪	Duplicate	▪	▪	▪	X
MW1-4 (zone 3)	▪	Lab QC	▪	▪	▪	X
MW1-4 (zone 4)	▪		▪	▪	▪	X
MW1-4 (zone 5)	▪		▪	▪	▪	X
MW1-4 (zone 6)	▪		▪	▪	▪	X
Blank	Equip.		▪	▪	▪	X
Blank	Temp[b]		▪	▪	▪	
MW1-5 (zone 1)	Zone		▪	Day 3	▪	X
MW1-5 (zone 2)	▪		▪	▪	▪	X
MW1-5 (zone 2)	▪	Duplicate	▪	▪	▪	X
MW1-5 (zone 3)	▪		▪	▪	▪	X
MW1-5 (zone 4)	▪		▪	▪	▪	X
MW1-5 (zone 5)	▪		▪	▪	▪	X
MW1-5 (zone 6)	▪		▪	▪	▪	X

Table 5-2b
Request for Analyses: Typical Quarterly Sampling Event
Area 3 Remedial Investigation
(Matrix = Water)

						Organics
Anticipated Laboratory Performing Analysis						EPA
Method						EPA 524.2 [(A)]
Specific Analyses Requested						VOCs
Preservatives						HCl to pH <2; chill to 4C; no headspace
Analytical Holding Time						Hold <14 days
Contract Holding Time						Hold <10 days
						# bottles/ analysis
Well Number	Sample Location	Sample ID	Concentration	Schedule	Turn-Around Time	3x40 mL glass vial
Blank	Equip.		-	-	-	X
Blank	Temp[b]		-	-	-	
					Total Well Samples	22
					Total Duplicates	3
					Total Field/Equipment Blanks	3
					Total Laboratory QC (MS/MSD) Samples	2
					Total Analyses	30

Notes

(A) pH readings to be reported for individual samples
(b) Temperature (Temp) blanks will be prepared and sent with each cooler each day
Labs: EPA = EPA Region IX Lab (Oakland, CA)
Lab QC = Matrix spike/matrix spike duplicate sample set which will be twice the normal sample volume

Table 5-2c
Request for Analyses: Third Quarterly Sampling Event
Area 3 Remedial Investigation
(Matrix = Water)

						Organics					Inorganics			
Anticipated Laboratory Performing Analysis						EPA			PA	EPA	EPA (EMAX)	EPA	EPA	EPA
Method						EPA 524.2 [A]	EPA 8270	Cal. DHS liquid extraction C/MS or Cal. DHS purge and trap GC/MS	Mod EPA 1625	EPA 8270/SIM	EPA 218.6	EPA 200.7, EPA 200.8,EPA 200.9, EPA 245.1	EPA 314	EPA 300.0
Specific Analyses Requested						VOCs	SVOCs	1,2,3-trichloropropane	NDMA	1,4-Dioxane	Hexavalent Chromium	Dissolved Metals	Perchlorate	Nitrate
Preservatives						HCl to pH <2; chill to 4C; no headspace	Chill to 4° C	HCl to pH <2; chill to 4C; no headspace	Chill to 4° C	Chill to 4° C	Chill to 4° C	0.45-um filter, HNO3 to pH<2, chill to 4° C	Chill to 4° C	Chill to 4° C
Analytical Holding Time						Hold <14 days	Hold < 7 days prior to extraction; <40 days after	Hold <14 days	Hold <7days prior to extraction; <40 days after extraction	Hold <7days prior to extraction; <40 days after extraction	< 24 Hours	<28 days for Hg <6 months for others	< 28 days	<48 hours
Contract Holding Time						Hold <10 days	Hold < 5 days	Hold <10 days	Hold <7days prior to extraction; <40 days after extraction	Hold <7days prior to extraction; <40 days after extraction	< 12 Hours	<28 days for Hg <6 months for others	< 28 days	<12 hours
						# bottles/ analysis					# bottles/ analysis			
Well Number	Sample Location	Sample ID [C]	Concentration	Schedule	Turn-Around Time	3x40 mL glass vial	2x1-L amber bottle	3x40 mL glass vial	2x1-L amber bottle	2x1-L amber bottle	1x125 mL poly bottle	1x1-L poly bottle	1x250 mL poly bottle	
MW1-1 Shallow	Well Head		Low	Day 1	Normal	X	X	X	X	X	X	X	X	X
MW1-1 Deep	"			"	"	X	X	X	X	X	X	X	X	X
MW1-2 Shallow	"			"	"	X	X	X	X	X	X	X	X	X
MW1-2 Shallow	"	Duplicate		"	"	X	X	X	X	X	X	X	X	X
MW1-2 Deep	"	Lab QC		"	"	X	X	X	X	X	X	X	X	X
Blank	Field			"	"	X	X	X	X	X	X	X	X	X
Blank	Temp[b]			"	"									
MW1-3 (zone 1)	Zone			Day 2	"	X	X	X	X	X	X	X	X	X
MW1-3 (zone 2)	"			"	"	X	X	X	X	X	X	X	X	X
MW1-3 (zone 3)	"			"	"	X	X	X	X	X	X	X	X	X
MW1-3 (zone 4)	"			"	"	X	X	X	X	X	X	X	X	X
MW1-3 (zone 5)	"			"	"	X	X	X	X	X	X	X	X	X
MW1-3 (zone 6)	"			"	"	X	X	X	X	X	X	X	X	X
Blank	Equip.			"	"	X	X	X	X	X	X	X	X	X
Blank	Temp[b]			"	"									
MW1-4 (zone 1)	Zone			Day 3	"	X	X	X	X	X	X	X	X	X
MW1-4 (zone 2)	"			"	"	X	X	X	X	X	X	X	X	X
MW1-4 (zone 2)	"	Duplicate		"	"	X	X	X	X	X	X	X	X	X
MW1-4 (zone 3)	"	Lab QC		"	"	X	X	X	X	X	X	X	X	X
MW1-4 (zone 4)	"			"	"	X	X	X	X	X	X	X	X	X
MW1-4 (zone 5)	"			"	"	X	X	X	X	X	X	X	X	X
MW1-4 (zone 6)	"			"	"	X	X	X	X	X	X	X	X	X
Blank	Equip.			"	"	X	X	X	X	X	X	X	X	X
Blank	Temp[b]			"	"									
MW1-5 (zone 1)	Zone			Day 4	"	X	X	X	X	X	X	X	X	X
MW1-5 (zone 2)	"			"	"	X	X	X	X	X	X	X	X	X
MW1-5 (zone 2)	"	Duplicate		"	"	X	X	X	X	X	X	X	X	X
MW1-5 (zone 3)	"			"	"	X	X	X	X	X	X	X	X	X
MW1-5 (zone 4)	"			"	"	X	X	X	X	X	X	X	X	X
MW1-5 (zone 5)	"			"	"	X	X	X	X	X	X	X	X	X
MW1-5 (zone 6)	"			"	"	X	X	X	X	X	X	X	X	X
Blank	Equip.			"	"	X	X	X	X	X	X	X	X	X

Table 5-2c
Request for Analyses: Third Quarterly Sampling Event
Area 3 Remedial Investigation
(Matrix = Water)

						Organics					Inorganics			
Anticipated Laboratory Performing Analysis						EPA			PA	EPA	EPA (EMAX)	EPA	EPA	EPA
Method						EPA 524.2 (A)	EPA 8270	Cal. DHS liquid extraction C/MS or Cal. DHS purge and trap GC/MS	Mod EPA 1625	EPA 8270/SIM	EPA 218.6	EPA 200.7, EPA 200.8,EPA 200.9, EPA 245.1	EPA 314	EPA 300.0
Specific Analyses Requested						VOCs	SVOCs	1,2,3-trichloropropane	NDMA	1,4-Dioxane	Hexavalent Chromium	Dissolved Metals	Perchlorate	Nitrate
Preservatives						HCl to pH <2; chill to 4C; no headspace	Chill to 4° C	HCl to pH <2; chill to 4C; no headspace	Chill to 4° C	Chill to 4° C	Chill to 4° C	0.45-um filter, HNO3 to pH<2, chill to 4° C	Chill to 4° C	Chill to 4° C
Analytical Holding Time						Hold <14 days	Hold < 7 days prior to extraction; <40 days after	Hold <14 days	Hold <7days prior to extraction; <40 days after extraction	Hold <7days prior to extraction; <40 days after extraction	< 24 Hours	<28 days for Hg <6 months for others	< 28 days	<48 hours
Contract Holding Time						Hold <10 days	Hold < 5 days	Hold <10 days	Hold <7days prior to extraction; <40 days after extraction	Hold <7days prior to extraction; <40 days after extraction	< 12 Hours	<26 days for Hg <6 months for others	< 26 days	<12 hours
						# bottles/ analysis					# bottles/ analysis			
Well Number	Sample Location	Sample ID (C)	Concentration	Schedule	Turn-Around Time	3x40 mL glass vial	2x1-L amber bottle	3x40 mL glass vial	2x1-L amber bottle	2x1-L amber bottle	1x125 mL poly bottle	1x1-L poly bottle	1x250 mL poly bottle	
Blank	Temp[b]													
Total Well Samples						22	22	22	22	22	22	22	22	22
Total Duplicates						3	3	3	3	3	3	3	3	3
Total Field/Equipment Blanks						4	4	4	4	4	4	4	4	4
Total Laboratory QC (MS/MSD) Samples						2	2	2	2	2	2	2	2	2
Total Analyses						31	31	31	31	31	31	31	31	31

Notes
(A) pH readings to be reported for individual samples
(b) Temperature (Temp) blanks will be prepared and sent with each cooler each day
Labs: EPA = EPA Region IX Lab (Oakland, CA); PA = Pacific Analytical (Carlsbad, CA); EPA (EMAX) = EMAX (Torrance, CA), an EPA Region IX Contract Lab
Lab QC = Matrix spike/matrix spike duplicate sample set which will be twice the normal sample volume

Table 5-3a
Request for Analyses: Investigation-Derived Wastes
Area 3 Remedial Investigation
(Matrix = Solids)

						Organics					
Anticipated Laboratory Performing Analysis						EPA	EPA	EPA		EPA	EPA
Method						EPA 5035/8260	EPA 9045	EPA 1010	8015-Gasoline	8015-Diesel	EPA 6010/7471 (Ca Title 22)
Specific Analyses Requested						VOCs	pH	Flashpoint	TPHg	TPHd	TTLC Metals
Preservatives						Chill to 4° C	Chill to 4° C	Chill to 4° C	Chill to 4° C	Chill to 4° C	Chill to 4° C
Analytical Holding Time						< 48 hours	<7 days	NA	< 48 hours (gas)	<14 days prior to extraction, 40 days after extraction (diesel)	< 6 months (28 days for mercury)
Contract Holding Time						< 48 hours	<5 days	NA	< 48 hours (gas)	<14 days prior to extraction, 40 days after extraction (diesel)	< 6 months (28 days for mercury)
						# bottles/ analysis					
Well Number	Sample Location	Sample ID	Concentration	Schedule	Turn-Around Time[a]	3xEncore containers	1 x 6-in brass sleeve		1 x 6-in brass sleeve		1 x 6-in brass sleeve
MW1-1	Roll off bins	MW1-1-C1 (Lab QC)	Low	Week 2	7-day	X	X	X	X	X	X
"	"	MW1-1-C2	"	"	"	X	X	X	X	X	X
"	"	MW1-1-C3 (Dup. of C2)	"	"	"	X	X	X	X	X	X
"	Baker Tank	MW1-1-M1	"	"	"	X	X	X	X	X	X
MW1-2	Roll off bins	MW1-2-C1	"	Week 4	"	X	X	X	X	X	X
"	"	MW1-2-C2	"	"	"	X	X	X	X	X	X
MW1-3	Roll off bins	MW1-3-C1	"	Week 7	"	X	X	X	X	X	X
"	"	MW1-3-C2	"	"	"	X	X	X	X	X	X
"	Baker Tank	MW1-3-M1	"	"	"	X	X	X	X	X	X
MW1-4	Roll off bins	MW1-4-C1(Lab QC)	"	Week 14	"	X	X	X	X	X	X
"	"	MW1-4-C2	"	"	"	X	X	X	X	X	X
"	"	MW1-4-C3 (Dup. of C2)	"	"	"	X	X	X	X	X	X
"	Baker Tank	MW1-4-M1	"	"	"	X	X	X	X	X	X
MW1-5	Roll off bins	MW1-5-C1	"	Week 16	"	X	X	X	X	X	X
"	"	MW1-5-C2	"	"	"	X	X	X	X	X	X
"	Baker Tank	MW1-5-M1	"	"	"	X	X	X	X	X	X
					Total Well Samples	10	10	10	10	10	10
					Total Duplicates	2	2	2	2	2	2
					Total Laboratory QC (MS/MSD) Samples	2	2	2	2	2	2
					Total Analyses	14	14	14	14	14	14

Notes

Labs: EPA = EPA Region IX Lab (Oakland, CA); EPA (EMAX) = EMAX (Torrance, CA), an EPA Region IX Contract Lab

Lab QC = Matrix spike/matrix spike duplicate sample set which will be twice the normal sample volume

(a) - Laboratories may need to perform certain analyses before the requested TAT, if the analytical or contract holding times are less than the TAT

Table 5-3b
Request for Analyses: Investigation-Derived Wastes
Area 3 Remedial Investigation
(Matrix = Water)

						Organics					Inorganics			
Anticipated Laboratory Performing Analysis						EPA			PA	EPA	EPA (EMAX)	EPA	EPA	EPA
Method						EPA 524.2 [(A)]	EPA 8270	Cal. DHS liquid extraction C/MS or Cal. DHS purge and trap GC/MS	Mod EPA 1625	EPA 8270/SIM	EPA 218.6	EPA 200.7, EPA 200.8,EPA 200.9, EPA 245.1	EPA 314	EPA 300.0
Specific Analyses Requested						VOCs	SVOCs	1,2,3-trichloropropane	NDMA	1,4-Dioxane	Hexavalent Chromium	Dissolved Metals	Perchlorate	Nitrate
Preservatives						HCl to pH <2; chill to 4C; no headspace	Chill to 4° C	HCl to pH <2; chill to 4C; no headspace	Chill to 4° C	Chill to 4° C	Chill to 4° C	0.45-um filter, HNO3 to pH<2, chill to 4° C	Chill to 4° C	Chill to 4° C
Analytical Holding Time						Hold <14 days	Hold < 7 days prior to extraction; <40 days after	Hold <14 days	Hold <7days prior to extraction; <40 days after extraction	Hold <7days prior to extraction; <40 days after extraction	< 24 Hours	<28 days for Hg <6 months for others	< 28 days	<48 hours
Contract Holding Time						Hold <10 days	Hold < 7 days prior to extraction; <40 days after	Hold <10 days	Hold <7days prior to extraction; <40 days after extraction	Hold <7days prior to extraction; <40 days after extraction	< 12 Hours	<26 days for Hg <6 months for others	< 26 days	<12 hours
						# bottles/ analysis					# bottles/ analysis			
Well Number	Sample Location	Sample ID [(C)]	Concentration	Schedule	Turn-Around Time	3x40 mL glass vial	2x1-L amber bottle	3x40 mL glass vial	2x1-L amber bottle	2x1-L amber bottle	1x125 mL poly bottle	1x1-L poly bottle	1x250 mL poly bottle	
MW1-1 Shallow	Baker Tank	MW1-1-DW1 (Lab QC)	Low	Week 4	72 hours	X	X	X	X	X	X	X	X	X
MW1-1 Deep	Baker Tank	MW1-1-DW2	"	"	"	X	X	X	X	X	X	X	X	X
MW1-1 Deep	Baker Tank	MW1-1-DW3 (Dup of DW2)	"	"	"	X	X	X	X	X	X	X	X	X
Blank	Field		"	"	"	X	X	X	X	X	X	X	X	X
Blank	Temp[b]		"	"	"									
MW1-2 Shallow	Baker Tank	MW1-2-DW1	"	Week 7	"	X	X	X	X	X	X	X	X	X
MW1-2 Deep	Baker Tank	MW1-2-DW2	"	"	"	X	X	X	X	X	X	X	X	X
Blank	Field		"	"	"	X	X	X	X	X	X	X	X	X
Blank	Temp[b]		"	"	"									
MW1-3	Baker Tank	MW1-3-DW1	"	Week 10	"	X	X	X	X	X	X	X	X	X
MW1-3	Baker Tank	MW1-3-DW2	"	"	"	X	X	X	X	X	X	X	X	X
MW1-3	Baker Tank	MW1-3-DW3	"	"	"	X	X	X	X	X	X	X	X	X
Blank	Field		"	"	"	X	X	X	X	X	X	X	X	X
Blank	Temp[b]		"	"	"									
MW1-4	Baker Tank	MW1-4-DW1 (Lab QC)	"	Week 16	"	X	X	X	X	X	X	X	X	X
MW1-4	Baker Tank	MW1-4-DW2	"	"	"	X	X	X	X	X	X	X	X	X
MW1-4	Baker Tank	MW1-4-DW3	"	"	"	X	X	X	X	X	X	X	X	X
MW1-4	Baker Tank	MW1-4-DW4 (Dup of DW3)	"	"	"	X	X	X	X	X	X	X	X	X
Blank	Field		"	"	"	X	X	X	X	X	X	X	X	X
Blank	Temp[b]		"	"	"									
MW1-5	Baker Tank	MW1-5-DW1	"	Week 19	"	X	X	X	X	X	X	X	X	X
MW1-5	Baker Tank	MW1-5-DW2	"	"	"	X	X	X	X	X	X	X	X	X
MW1-5	Baker Tank	MW1-5-DW3	"	"	"	X	X	X	X	X	X	X	X	X
Blank	Field		"	"	"	X	X	X	X	X	X	X	X	X
Blank	Temp[b]		"	"	"									

Table 5-3b
Request for Analyses: Investigation-Derived Wastes
Area 3 Remedial Investigation
(Matrix = Water)

							Organics					Inorganics			
Anticipated Laboratory Performing Analysis							EPA			PA	EPA	EPA (EMAX)	EPA	EPA	EPA
Method							EPA 524.2 (A)	EPA 8270	Cal. DHS liquid extraction C/MS or Cal. DHS purge and trap GC/MS	Mod EPA 1625	EPA 8270/SIM	EPA 218.6	EPA 200.7, EPA 200.8,EPA 200.9, EPA 245.1	EPA 314	EPA 300.0
Specific Analyses Requested							VOCs	SVOCs	1,2,3-trichloropropane	NDMA	1,4-Dioxane	Hexavalent Chromium	Dissolved Metals	Perchlorate	Nitrate
Preservatives							HCl to pH <2; chill to 4C; no headspace	Chill to 4° C	HCl to pH <2; chill to 4C; no headspace	Chill to 4° C	Chill to 4° C	Chill to 4° C	0.45-um filter, HNO3 to pH<2, chill to 4° C	Chill to 4° C	Chill to 4° C
Analytical Holding Time							Hold <14 days	Hold < 7 days prior to extraction; <40 days after	Hold <14 days	Hold <7days prior to extraction; <40 days after extraction	Hold <7days prior to extraction; <40 days after extraction	< 24 Hours	<28 days for Hg <6 months for others	< 28 days	<48 hours
Contract Holding Time							Hold <10 days	Hold < 7 days prior to extraction; <40 days after	Hold <10 days	Hold <7days prior to extraction; <40 days after extraction	Hold <7days prior to extraction; <40 days after extraction	< 12 Hours	<26 days for Hg <6 months for others	< 26 days	<12 hours
							# bottles/ analysis					# bottles/ analysis			
Well Number	Sample Location	Sample	ID (C)	Concentration	Schedule	Turn-Around Time	3x40 mL glass vial	2x1-L amber bottle	3x40 mL glass vial	2x1-L amber bottle	2x1-L amber bottle	1x125 mL poly bottle	1x1-L poly bottle	1x250 mL poly bottle	
Total Well Samples							13	13	13	13	13	13	13	13	13
Total Duplicates							2	2	2	2	2	2	2	2	2
Total Field/Equipment Blanks							5	5	5	5	5	5	5	5	5
Total Laboratory QC (MS/MSD) Samples							2	2	2	2	2	2	2	2	2
Total Analyses							22	22	22	22	22	22	22	22	22

Notes

(A) pH readings to be reported for individual samples

(b) Temperature (Temp) blanks will be prepared and sent with each cooler each day

Labs: EPA = EPA Region IX Lab (Oakland, CA); PA = Pacific Analytical (Carlsbad, CA); EPA (EMAX) = EMAX (Torrance, CA), an EPA Region IX Contract Lab

Lab QC = Matrix spike/matrix spike duplicate sample set which will be twice the normal sample volume

Section 6
Field Methods and Procedures

This section of the FSP provides information on field activities associated with the Area 3 RI. Included in this section are methods and procedures for the following:

- Monitoring well drilling and construction
- Sample collection
- Use of sample containers and preservatives
- Decontamination
- Containment and disposal of investigation-derived wastes
- Sample management and documentation
- Quality control sample collection

6.1 Monitoring Well Drilling and Construction

6.1.1 Drilling

All boreholes will be advanced using the direct mud rotary drilling technique. Drilling mud will be used to minimize borehole collapse and to assist in evacuating drill cuttings from the boreholes. Drilling mud is expected to reduce the possibility of cross contamination between groundwater zones because it continuously invades the formation along the borehole walls and forms a low-permeability mud cake.

Drilling mud will consist of bentonite and water. No other additives will be permitted in the mud unless approved by the site hydrogeologist and EPA remedial project manager (RPM). The viscosity and density of the drilling mud will be tested periodically and maintained within the limits specified by the site hydrogeologist or engineer. Drilling mud will be forced down the drill pipe and out through ports in the drill bit utilizing the minimum quantity of mud required to evacuate drill cuttings from the borehole.

Methods where casing is advanced during drilling (e.g., dual-wall reverse circulation) have a number of disadvantages compared to mud rotary drilling. Previous experience with these methods in the South El Monte OU resulted in extended delays in borehole drilling due to sediments infilling the drive casing every time the air supply was turned off to add a new length of drive casing. Any extended delay in borehole drilling could increase the chances of cross contamination or other problems. In addition, a disadvantage of methods where casing is advanced during drilling is that the traditional suite of geophysical logs cannot be run in the borehole when the drive casing is in place. Well design (e.g., location of screen intervals and sampling points) is based largely on the results of geophysical logging, and to a much lesser extent on the lithologic log generated from cuttings collection. Thus it is imperative to be able to run geophysical logs in the borehole. Geophysical logs can be run by removing the drive casing and backfilling the borehole with bentonite drilling mud. However, this borehole situation is then analogous to that resulting from direct mud rotary

drilling and no significant advantage is gained. Well installation using the direct (mud) rotary drilling method, as described in this FSP, is preferred over other methods, such as those involving driving of casing during borehole advancement. Although not quantifiable, we expect that the amount of groundwater that might enter the borehole in one location and exit in another location during mud rotary drilling is negligible, especially when compared to the large quantities of water removed from the various screen intervals during well development (on average 11,000 gallons). This is based primarily on the function of drilling mud. Use of bentonite drilling mud is designed to minimize water loss or gain in the borehole during drilling and well construction. Use of the drilling mud results in a thin layer of mud forming on the borehole wall and penetrating into the formation. It is this layer that minimizes water loss/gain, allowing the borehole to stay open during drilling, thus allowing placement of well casing and screen. Also, though a vertical downward hydraulic gradient may exist near the proposed MP wells, we do not expect to find VOCs above laboratory detection limits in the shallow zone. Thus the chances of contamination being transferred to the intermediate aquifer near the wells is unlikely.

All fluids and drill cuttings produced during the drilling operation will be contained and disposed of as indicated in Section 6.5.

6.1.2 Borehole Drill Cuttings Collection

Borehole drill cuttings will be collected for lithologic logging over 10-foot intervals as drilling fluids are circulated through the borehole. The drill cuttings will be logged onsite by a hydrogeologist. Downhole soil samples will not be collected for laboratory analysis.

In the past, attempts have been made to use PID organic vapor reading to select cuttings for analysis. However, based on previous experience in the Whittier Narrows OU, no organic vapors have been detected during monitoring of drill cuttings during drilling and logging of the cuttings. Thus PID organic vapor monitoring or readings are unlikely to be useful for screening of cuttings for analysis.

Samples will be collected, lithologically logged, screened for organic contaminants, and, following completion of the boring, disposed of with the rest of the drill cuttings.

6.1.3 Well Installation and Construction

Total monitoring well and screen interval depths will be selected by the site hydrogeologist (in consultation with the SM and EPA RPM) based primarily on the review of lithologic and geophysical logs for the borehole and on comparison to screen intervals of nearby production wells with known contamination. The lithologic and geophysical logs for the borehole will assist the hydrogeologist in selecting stratigraphic units with higher permeability (i.e., sand, gravel, or both), because they would be expected to provide preferential pathways for contamination. By comparing these units with hydrogeologic cross sections in the FSP and screen intervals of production wells with known contamination, the hydrogeologist will be able to select screen intervals that are most likely to span areas of contaminant migration.

Immediately upon completion of the drilling, boreholes will be geophysically logged. Results from the geophysical logging will help determine which zones to monitor. The following geophysical logs will be run:

- Resistivity (16- and 64-inch lateral)
- Spontaneous potential (SP)
- Focused resistivity
- Natural gamma
- Caliper

The geophysical logs and lithologic logs will be reviewed and the desired monitoring zones identified and delineated. Groundwater monitoring wells will then be designed for the boreholes (e.g., well depth and screened interval[s]). The site hydrogeologist will produce a field sketch of the well design. Monitoring well designs for the cluster and MP wells are discussed below.

6.1.3.1 Typical Multiport Monitoring Well Design

MP monitoring wells are a series of nested monitoring points installed on a customized casing string with multiple-screened intervals within a single, cased borehole. This system casing (see Figure 6-1) includes specialized couplings, casings, permanently installed packers, pumping ports, and special pressure measurement and sampling ports.

The MP wells will be installed in 12-inch-diameter borings. The outer well casing will consist of alternating sections of 4-inch-inside-diameter (ID) Schedule 10S stainless-steel (Type 304) and Schedule 40 mild steel casing (Figure 6-1). Stainless-steel or mild steel centralizers will be attached to the well casing approximately every 50 feet during installation. Stainless-steel centralizers will be attached to stainless-steel casing and mild steel centralizers will be attached to mild steel casing.

Gravel pack will be tremmied around each screened interval, generally extending 10 feet above and below a screen, as shown in Figure 6-1. Gravel pack material will consist of thoroughly washed, hard, durable, siliceous sand.

The size and gradation of the gravel pack, as well as the screen slot size, will be assessed by the site hydrogeologist on the basis of field examination of formation samples and on previous experience in adjacent OUs in the San Gabriel Basin (most wells have been completed using RMC Lonestar Monterey #3 grade gravel pack and corresponding 0.020-inch screen slot size). A minimum of 3 feet of fine silica sand will be placed directly above and below the gravel pack material to separate it from the bentonite/sand seals. Annular seals between the screened zones, consisting of a 50:50 mixture (dry volume) of bentonite chips and sand, will be placed between each screen zone in the MP wells. The two constituents will be mixed dry, then mixed with clean water and injected at specific depths using a tremmie pipe. The uppermost annular seal in each well will consist of cement grout, with a small amount of bentonite powder to reduce grout shrinking and cracking.

After completion of well construction, each screened interval will be developed by a combination of bailing, swabbing, and pumping. Although contamination of deeper aquifers from shallow aquifers has apparently occurred during development of some MP wells in the San Gabriel Basin, the deeper, artificial, contamination has dissipated with time. Because this has been recognized, the drilling subcontractor will install temporary packers each night during well development, prior to installation of the Westbay packer system. This will significantly decrease the potential for cross contamination during well

development. Initial well development will consist of bailing residual mud from the well, followed by airlifting and swabbing with a surge block. Following airlifting and swabbing, a submersible pump with straddle packers will be placed in the well to develop each screened interval separately. The pump will be turned on and off periodically to induce backwashing of the water into the gravel pack and aquifer. A turbidity meter will be used to monitor turbidity levels in water during well development. Development will continue until a value of not greater than 5 nephelometric turbidity units (NTU) is achieved or until the water is relatively clear and sediment free and the onsite hydrogeologist deems that further development would be ineffective. Development of existing MP well screens within the Baldwin Park, Puente Valley, South El Monte, and Whittier Narrows OUs has been successful using methods described in this FSP. Sufficient time will be allotted to perform well development and development of the proposed MP wells will be consistent with previous MP well installations in other OUs in the San Gabriel Valley.

Upon completion of the development activities, a video survey of the well casing and screen of each MP well will be conducted. The MP system instrumentation will be installed after confirmation of the well casing and screen assembly integrity through the video survey. The system consists of casing, couplings with sampling and pumping ports, and inflatable packers. The bottom packer for each zone will be set within the blank stainless-steel casing. The upper packer, and a companion packer, will be set within a single length of blank mild steel casing immediately above the blank stainless-steel casing of each zone. These two packers will serve to isolate a measurement port (see below) for testing the integrity of the packers between screened intervals. Typical construction details (Figure 6-1) are discussed as follows:

- MP casing, couplings, and packer locations will be dictated by the screened interval depths.
- The MP casing serves as blank casing along the interior of the outer 4-inch-diameter well casing.
- The function of the special MP measurement port coupling is to allow for fluid pressure measurement and for water sample collection. A measurement port is also installed between perforated intervals to test the integrity of the inflatable packers. The MP pumping port coupling allows for a one-time purging of the zone to be sampled (if deemed necessary, additional purging can be done through the pumping ports in the future).
- The inflatable packers provide a seal between screened intervals along the interior of the well casing, thereby precluding cross contamination and vertical movement of fluids within the well. Each perforated interval is separated by three packers.
- Within each screened monitoring zone, the instrumentation consists of a pumping and a monitoring port coupling.
- The packers will be installed at a maximum of 5 feet below each screened interval and 15 and 25 feet above each screened interval.

- The sampling port coupling will be installed adjacent to the pumping port coupling with 1 to 3 feet of blank MP casing separating the couplings. All ports will be closed so that no water can enter the center of the MP system.
- Both the pumping and monitoring couplings will be located adjacent to the screened interval (i.e., within the 10-foot depth interval of the screen).

It should be noted that the greatest risk of cross contamination exists after well development and before installation of the MP instrumentation. This potential for cross contamination will exist for approximately 24 hours (the time required to install and inflate the hydraulic packers the day after well development is completed). To minimize the potential for cross contamination, all efforts will be made to provide the MP instrumentation onsite prior to completion of well development. This will allow the MP instrumentation to be installed immediately after well development. If the MP instrumentation is not onsite upon the completion of well development, the inflatable packers will be installed between each screen interval well until the MP instrumentation is ready for installation.

After the MP instrumentation has been installed, one pumping port at a time will be opened and that interval pumped at the maximum available pumping rate (approximately 1 gallon per minute [gpm]) for a minimum of 2 hours (or until the discharge is clear, as determined by the site hydrogeologist).

The wellhead completion detail shown in Figure 6-2 will be used for MP monitoring wells.

6.1.3.2 Typical Cluster Monitoring Well Design

Two, two-well clusters, MW1-1 and MW1-2, with 4-inch-diameter monitoring wells will be installed. The two conventional 4-inch monitoring wells comprising cluster well MW1-1 will be drilled to depths of approximately 345 feet bgs and 415 feet bgs. The two conventional 4-inch monitoring wells comprising cluster well MW1-2 will be drilled to depths of 360 feet bgs and 430 feet bgs. For the 4-inch monitoring well cluster, a single pass, 12-inch-diameter borehole will be drilled using the same rotary drilling method as that used for the MP monitoring well boreholes. After drilling, the initial 12-inch borehole at the each cluster will be geophysically logged as per Section 6.1. The geophysical logs and lithologic logs will be reviewed and the desired monitoring zones identified and delineated. A second borehole will be drilled for the shallower monitoring well in the two-well cluster. Groundwater monitoring wells will then be designed for the boreholes (e.g., well depth and screened interval[s]). The site hydrogeologist will produce a field sketch of the well design. All fluids and cuttings produced during drilling will be contained and disposed of as described in Section 6.5.

The two, two-well clusters of conventional monitoring wells will be constructed of 4-inch-diameter stainless and mild steel casing and screen (Figure 6-3). The blank well casing will consist of 20-foot sections of Schedule 40 mild steel casing installed to just above the screens. Blank stainless steel will be inserted between the mild steel casing and stainless-steel screen, as well as below the well screen. The well screen will be wire-wrap, continuous-slot, 4-inch-diameter stainless steel 20 feet in length. Centralizers will be attached to the well casing at intervals of not more than 50 feet to centralize and hold the casing in the borehole until the gravel pack and annular seal are in place. The centralizers will be of the same material as the well casing.

The filter pack, annular seal, and well development for the conventional monitoring cluster wells will be comparable to what was described above for the MP monitoring wells. The one exception is that the 1:1 mix of granular bentonite and sand is not used in the conventional wells; instead, a cement/bentonite grout is installed above the filter pack. The size and gradation of the gravel pack, as well as the screen slot size, will be assessed by the site hydrogeologist on the basis of field examination of formation samples and on previous experience in the adjacent OUs in the San Gabriel Basin (most wells have been completed using RMC Lonestar Monterey #3 grade gravel pack and corresponding 0.020-inch screen slot size).

The cluster monitoring wells will be developed as per the MP monitoring wells, using a combination of bailing, swabbing, and pumping. A dedicated stainless-steel sampling pump will then be installed in each cluster well, as shown in Figure 6-3.

The wellhead completion detail shown in Figure 6-2 will be used for the MP and cluster monitoring wells. Following completion of the wellheads, each monitoring well will be surveyed to determine the well location and elevation. Survey results will be entered into EPA's San Gabriel database.

6.2 Groundwater Sample Collection

Groundwater samples will be collected from cluster and MP monitoring wells that will be installed as part of the RI field activities. The following subsections describe sample collection procedures that will be used during the monitoring program described in this FSP.

6.2.1 Cluster Monitoring Wells

A dedicated bladder pump will be used for purging and sampling the cluster monitoring wells following the guidelines outlined below. The bladder pump will be made of stainless steel and Teflon with twin-bonded polyethylene tubing (1/4-inch air supply by 3/4-inch Teflon-lined PE) used to convey the groundwater to the wellhead for sample collection and discharge. The pump will be rated to 1,000 feet of lift and will be placed in the middle of the well screen subsequent to well construction.

6.2.1.1 Conventional Sampling

Each well will be pumped until field parameters (temperature, pH, turbidity, and electrical conductivity [EC]) have stabilized within 10 percent over three successive readings and a minimum of three casing volumes have been removed from the well prior to collecting samples. A casing volume is calculated by multiplying the head of water in the casing (well depth minus depth-to-water) by the cross-sectional area of the casing (πr^2). Determination of a casing volume will be based on measurements of the depth-to-water at the time of sampling using an electric sounder.

An attempt will be made, during sampling, to adjust the sampling rate to approximately 100 milliliters per minute (mL/minute) to yield more representative samples. One method of achieving this will be to measure the time necessary to fill a "dummy" 40-mL vial (i.e., a vial that will not be used to collect actual samples). It should take approximately 25 seconds

to fill a 40-milliliter (mL) vial at a flow rate of approximately 100 mL/minute. In this manner, the sampling rate can be adjusted by trial and error, until it takes 25 seconds to fill the "dummy" vial. Then actual samples will be collected in new vials. Sample containers will be filled using disposable, nonreactive (such as Teflon) tubing that conveys water from the sampling valve into the appropriate sample container. Disposable gloves will be worn during sampling, and a new pair of gloves will be used at each well.

6.2.1.2 Low-Flow Sampling

Low-flow groundwater sampling is the process of purging and sampling wells at low flow rates from within the well screen zone to minimize purging and improve sample quality. Low-flow groundwater sampling has the advantage of producing a representative groundwater sample with far less total well purge water than is obtained from conventional sampling of monitoring wells, in which three well volumes are purged prior to sampling. Low-flow purging and sampling refers to the velocity with which water enters the pump intake, not necessarily to the flow rate of water discharged at the surface. Water-level drawdown provides the best indication of the stress imparted by a given flow rate for a given hydrological situation. A 2-inch-diameter submersible pump, with variable flow-rate control (as low as 100 mL/min recommended by EPA), will be placed in the middle of the screened interval during well construction. The proper flow rate for each well will be based on the ability to establish a low-flow rate at an acceptable level of drawdown (0.2 to 0.3 feet), and with minimum fluctuations of that water level during pumping. To achieve this, the pump will be initially operated at the minimum flow capacity of the pump, then the flow rate will be gradually increased until some initial drawdown is observed. The flow rate will then be reduced slightly to achieve a stabilized purge rate for the well. It is anticipated that flow rates on the order of 0.1 to 0.5 liters per minute (L/min) will be achieved. However, the flow rate will not exceed 1.0 L/min in any case.

Careful, continuous measurement of field parameters including turbidity, temperature, EC, and pH will be used to assess when purged water has reached equilibrium (parameter stabilization criteria are described in Section 6.2.1.1). The time interval between readings will be dictated by the stabilized pumping rate for each well (typically between 1 and 3 minutes). An initial change in the measurements typically indicates that water is being drawn from a different source ("active" versus "stagnant" water). Stabilization of these parameters would indicate that the water is coming from a steady-state source (the formation immediately surrounding the well screen near the pump intake). Equilibrium conditions are sometimes achieved after extraction of less than 10 liters, with 4 to 8 liters being the average reported in published studies. Therefore, the volume of water removed by this method during purging will be considerably less than with conventional purging techniques.

Accurate measurement of the field parameters will require a flow-through cell or other means to ensure that the purge water is continuously monitored. Although the flow-through cell is the preferred method, an acceptable alternate method is placing the probes in a small bucket or beaker that continuously overflows with the discharge tubing placed near the probes, and covering the beaker or bucket with clear plastic film (such as Saran Wrap®).

6.2.2 MP Monitoring Wells

The procedures for sampling MP wells differ from those for conventional monitoring wells. Sampling procedures for MP wells are outlined below.

There is no standing water inside the well casing with the MP well. Consequently, purging of the well prior to sampling is not required. Groundwater samples are taken directly from the formation via the depth-discrete sampling ports and a specially designed sampling tool. Numerous QC procedures are used during sampling, and sampling is performed under the supervision of a Westbay-certified sampler. The sampling tool is lowered to the desired sampling port and activated from the surface to seat against and open the port. After the attached sampling vessel is filled, the port is closed and the tool is brought to the surface. A more detailed description of the sampling tools is included in Appendix B.

A sampling tool with 250-mL stainless-steel cylinders will be used for sampling MP wells (i.e., the sampling tool will be brought to the surface and the sample transferred to the appropriate containers). Four 250-mL cylinders will be available onsite.

The first sample drawn from each depth will be used to measure field parameters (temperature, pH, turbidity, and EC), and to allow for some flushing of the sampling instrumentation. All measurements will be recorded in a field notebook along with the location, time, and date of each measurement. The subsequent samples drawn from each depth will be collected for VOCs, 1,4-dioxane, or perchlorate analyses, for example. Groundwater will be transferred to the volatile organic analysis (VOA) or other sample bottles by means of mechanically opening a small-aperture valve at the end of the MP well downhole sample container (i.e., 250-mL stainless-steel cylinder), permitting a small stream of groundwater to exit the downhole sample container. In this manner, the flow rate into the sample bottles is controlled, so that sampling becomes analogous to low-flow micro-purge groundwater sampling. The sampling procedure will be repeated until sufficient water is obtained from each port, and all sampling ports are sampled. Disposable gloves will be used during sampling. A new pair of gloves will be used at each port.

6.2.3 Field Parameters Measurement

A conventional pH meter with a combination gel-filled electrode or equivalent will be used for field pH and temperature measurements (digital readout). A combination conductivity-temperature-salinity meter will be used for EC measurement. Turbidity measurements will be made with a digital readout turbidity meter (readout in NTU). Samples for field measurements will be collected in a beaker used solely for field parameter determinations. All probes will be thoroughly rinsed with distilled water prior to, and between, any measurements at each well.

When using the low-flow sampling technique, flow-through cells will be used to measure the field parameters. Low-flow rate purging, sampling, and field parameter measurement of this nature is often referred to as "micro-purge" sampling and results in quicker sampling, generation of less purge water, and more representative sampling results.

Equipment used to measure field parameters will be maintained and calibrated according to manufacturer's specifications. At a minimum, calibration will occur at the start of each day and, will be recorded in the field logbook along with the equipment serial number.

Each well will be pumped until the measured field parameters (temperature, pH, turbidity, and EC) have stabilized within 10 percent over three successive readings prior to collecting samples. Additionally, when using the conventional sampling technique, cluster wells will be pumped until a minimum of three casing volumes have been removed from the well.

6.3 Sample Containers and Preservatives

Sample container requirements and preservation methods for each analysis are summarized in Tables 5-2 and 5-3. Sample containers will be laboratory-provided or purchased with certificates of cleanliness from approved laboratory product suppliers.

6.3.1 Groundwater

Samples to be analyzed for VOCs and 1,2,3-trichloropropane will be collected in three 40-mL glass VOA vials. A sufficient amount of 1:1 hydrochloric acid (HCl) will be placed inside the vials to lower the sample pH to less than 2.

Samples will be tested to ensure sufficient preservatives have been added (e.g., a test bottle or vial). And, the test bottles will be filled and checked to determine if sufficient preservatives have been added using the following (or similar) steps:

- Add preservative to test sample vial
- Fill with sample, cap, and invert to ensure mixing
- Test the pH to determine if <2 is achieved; if so, add same amount of preservative to the actual sample vial and collect the sample; discard the test vial
- Add more preservative and repeat until pH<2 is achieved

Many laboratories provide preacidified VOA-sample vials and these will be used, if available from the laboratory. A field check of the amount of preservative contained in the preacidified VOA vials will be conducted similar to the approach described above, to confirm that sufficient preservative has been provided. If the preacidified VOA vials do not contain enough preservative to achieve the proper pH (<2), additional preservative will be added to the vial and repeated until the proper pH is achieved. This additional amount of preservative will then be added to each sample container prior to collection of samples.

The vials will be filled so that no headspace is present after sample collection. Filled containers will be checked by inverting the vial and tapping to reveal any air bubbles. If air bubbles are present, containers will be emptied, reacidified, and refilled. If, after several attempts at sample collection, air bubbles remain, the sample will be described in the field notebook as an "aerated sample."

VOA vials will be cooled to 4°C and stored away from sunlight prior to shipping by immediately placing the full sample bottle into an iced cooler. The maximum analytical holding time for VOCs and 1,2,3-trichloropropane will be 14 days.

Samples collected for SVOCs will be placed in 1-liter amber glass bottles and cooled to 4°C. Two liters will be collected for this analysis, and the maximum analytical/contract holding time for SVOCs will be 7 days prior to extraction and 40 days following extraction.

Samples collected for NDMA will be placed in 1-liter amber glass bottles and cooled to 4°C. Two liters will be collected for this analysis, and the maximum analytical/contract holding time for NDMA will be 7 days prior to extraction and 40 days following extraction.

Samples for 1,4-dioxane analysis will be collected in unpreserved 1-liter glass amber bottles and cooled to 4°C. The analytical holding time for this analysis will be 7 days prior to extraction and 40 days following extraction.

Samples for dissolved metals analysis will be passed through a 0.45-micron filter immediately after collection. The samples will subsequently be preserved by addition of nitric acid to a pH less than 2. The pH paper should not be inserted into the bottle as the dyes used contain metals. Samples will be placed into 1-liter polyethylene bottles and cooled to 4°C. The maximum analytical holding time for dissolved metals will be 6 months.

Samples for hexavalent chromium will be placed in one 125-mL polyethylene bottle and chilled to 4°C. The analytical holding time for this method will be 24 hours.

Samples collected for perchlorate will be placed in one 250-mL polyethylene bottle or together with nitrate in one 250-ml polyethylene bottle and cooled to 4°C. The maximum analytical holding time will be 28 days for perchlorate.

6.3.2 Investigation-Derived Wastes

Drill cuttings samples in roll-off bins will be collected using an Encore or equivalent sampling apparatus and container. The Encore (or equivalent) sampling apparatus will be provided by the laboratory, as will the hermetically sealed 25-gram sample containers. The sample container will be pushed into the cuttings approximately 6 inches below the previously exposed surface of the material in the roll-off bin. The exterior of the container will then be wiped with a clean towel to remove any solids and permit closure of the container. The container will be closed according to the manufacturer's instructions. Sample ID information will be filled out on the back of the reclosable (originally hermetically sealed) sample pouch, as well on a removable sample tag. The maximum analytical holding time for VOCs will be 14 days.

Drill cuttings samples for additional analyses will be collected in brass sleeves in a manner similar to the collection of samples in Encore sample containers. Samples for analysis of TTLC metals will be placed in a brass sleeve, capped with teflon tape and plastic caps, and cooled to 4°C. The maximum holding time for TTLC metals are 6 months (28 days for mercury).

Samples for analysis of TPH will be placed in a brass sleeves, capped with Teflon tape and plastic caps, and cooled to 4°C. The maximum holding time for TPH Gasoline is 48 hours and for TPH Diesel are 10 days (from collection) and 40 days (from extraction).

Samples for analysis of flashpoint and pH will be placed in a brass sleeve, capped with Teflon tape and plastic caps, and cooled to 4°C. The maximum holding times for flashpoint is 28 days.

One drilling fluid sample per "Baker" tank at each well site will be collected and submitted for laboratory analysis. Each sample will be collected using a new, disposable polyethylene bailer and inert rope to fill the appropriate sample containers. After collecting drilling fluid

from near the bottom of the temporary storage container, the liquid will be slowly poured from the bailer into the sample container to minimize agitation and to prevent overfilling of the container. High liquid-content drilling mud holding times are identical to drill cutting and low liquid-content holding times, except that the samples will be collected in two 1-liter amber glass bottles and cooled to 4°C.

Monitoring well development water from each well will be stored onsite in temporary storage containers pending results from sampling. Each well development water sample will be collected using a new, disposable polyethylene bailer and inert rope to fill the appropriate sample containers (e.g., acidified, 40-mL glass vials for VOC analysis). After collecting water from mid-depth in the temporary storage container, the water will be slowly poured from the bailer into the sample containers to minimize agitation and to prevent overfilling of the containers. Sample container requirements and analytical holding times are described in Section 6.3.1.

6.4 Decontamination

Field equipment used during sampling activities will be decontaminated using the following procedure:

- Wash with nonphosphate detergent
- Rinse with deionized water
- Rinse with high-performance liquid chromatography (HPLC)-grade water
- Air dry

The MP sampling tools and containers will be decontaminated after the complete sample is retrieved from each sampling zone. The tool used for purging each zone will not require repeated decontamination, as it will not be in direct contact with sampling fluids.

6.5 Containment and Disposal of Investigation-Derived Waste

The types of wastes that may be derived from the RI field activities include drill cuttings and drilling fluids from drilling activities, water from developing and purging monitoring wells before sampling, protective clothing, and trace amounts of decontamination rinsate.

6.5.1 Drill Cuttings and Drilling Fluids

Drill cuttings and drilling fluids will be sampled and analyzed to assess whether they are hazardous. Based on previous experience in the San Gabriel Basin, these wastes are anticipated to be classified as nonhazardous.

To expedite disposal of wastes, a laboratory provided by EPA will provide quick turnaround of waste analyses results. If testing indicates that, none of the quantified VOCs are above federal and state regulatory levels and that the pH, flashpoint, and total petroleum hydrocarbon (TPH) results are acceptable (i.e., the wastes are not corrosive or flammable and contain petroleum hydrocarbons below landfill limits), the cuttings and solidified drilling mud wastes well be classified as nonhazardous and disposed of at a local Class III landfill.

If, however, the drill cuttings are classified as hazardous waste, then the bins will be hauled to a hazardous waste disposal facility approved to receive CERCLA wastes. Free liquids may be removed from the drill cuttings by solidification at each well site. The solidification process would involve pumping all free liquids off the drill cuttings and allowing the drill cuttings to solidify through natural evaporation.

If nonhazardous, spent drilling mud will be disposed of at a local facility specializing in drilling mud disposal. Free liquids may be removed from the drilling mud by solidification at each well site. The solidification process would involve pumping all free liquids off the drill cuttings and allowing the drill cuttings to solidify through natural evaporation. Nonhazardous drilling mud may be sent to a recycler for use in plugging oil wells or to a landfill for use as landfill cover material. If, however, the drilling mud is classified as hazardous waste, the material may be hauled to a hazardous waste disposal facility approved to receive CERCLA wastes or to an approved recycling facility.

6.5.2 Development and Purge Water

If the well development water sample results show that the water contains VOCs at concentrations exceeding regulatory levels, the water will be treated onsite with a portable granular activated carbon (GAC) drum to remove VOCs prior to discharge. This treatment system will be evaluated by analyzing the effluent water from the GAC drum for VOCs on a quick turn-around time basis (24 to 72 hours).

Removal of SVOCs, 1,4-dioxane, perchlorate, NDMA, metals, hexavalent chromium, and 1,2,3-Trichloropropane from development water is not anticipated to be necessary, as these compounds are not expected to be encountered at elevated levels. If these compounds are detected above regulatory levels (see the companion QAPP [EPA, 2002]), the water will be transported to an approved treatment, storage, and disposal facility (TSDF).

Sampling of monitoring wells with dedicated pumps will potentially produce VOC-contaminated water. These wells may include MW1-1 and MW1-2. This water will be pumped through GAC drums to remove VOCs prior to discharge to the ground surface (e.g., street gutter or storm drain catch basin) at each well location. EPA currently employs this method of purge-water disposal in the Whittier Narrows OU to remove VOCs from water prior to discharge to the ground surface.

A different GAC drum will be used for treatment of purge water from sampling of cluster wells with dedicated pumps. Once the GAC drums are no longer needed or have reached saturation with respect to VOCs and no longer remove VOCs in the groundwater, they will be disposed of according to applicable local, state and federal regulations. The GAC drum supplier will sample, analyze, and profile the GAC according to applicable local, state, and federal regulations, as stipulated in a prepaid agreement with the supplier.

Removal of SVOCs, 1,4-dioxane, perchlorate, NDMA, metals, hexavalent chromium, and 1,2,3-Trichloropropane from pumped groundwater is not anticipated to be necessary, as these compounds are not expected to be encountered at elevated levels. If these compounds are detected above regulatory levels (see the companion QAPP [EPA, 2002]), the water will be transported to an approved TSDF.

6.5.3 Clothing

All drilling and sampling activities included in this plan are anticipated to be performed in modified Level "D" personal protective equipment. Disposable protective clothing generated during the performance of the work will be contained in Department of Transportation (DOT)-approved 55-gallon drums (i.e., 17H). The drums will be sealed and labeled to indicate site name, drilling locations, and what is being stored. If the drill cuttings and drilling mud are determined to be nonhazardous, the protective clothing will be disposed of at a local Class III landfill. If, however, the drill cuttings and/or drilling mud are classified as hazardous waste, then the drums will be hauled to a hazardous waste disposal facility approved to receive CERCLA wastes.

6.6 Sample Management Procedures and Documentation

The following section discusses various sample management procedures that will be followed during the performance of field activities. Included in these sections are procedures for sample packaging and transportation, sample labeling and sample documentation.

6.6.1 Sample Packaging and Shipment

The sample packaging and shipment procedures are outlined below.

6.6.1.1 Preparation of Sample Coolers

The following steps will be used to prepare the sample coolers:

1. Remove all previous labels used on the cooler.
2. Seal all drain plugs with tape (inside and outside).
3. Place a cushioning layer of recyclable cornstarch popcorn or bubble wrap at the bottom of the cooler.
4. Line the cooler with a large plastic bag to contain samples.
5. Double-bag all ice in resealable plastic bags and seal.

6.6.1.2 Packing Samples in Coolers

The following steps will be used to pack the samples in coolers:

1. Place the chain-of-custody (COC) form in a resealable bag and tape to the underside of the cooler lid.
2. Make sure that all glass sample containers are packaged in bubble wrap, secured with clear mailing tape.
3. Place samples in an upright position in the cooler.
4. Place ice on top of and between the samples.
5. Fill the void space between samples with recyclable cornstarch popcorn, double-bagged ice or bubble wrap.

6. Custody seal large plastic bag containing samples and packing material.

6.6.1.3 Closing and Shipping of Cooler

Coolers will be packed with packing material surrounding the bottles to prevent breakage during transport. Ice will be sealed in plastic bags to prevent melting ice from soaking the packing material. Sample documentation will be enclosed in sealed plastic bags taped to the underside of the cooler lid. Coolers will be secured with packing tape and custody seals as described in the steps below.

1. Tape the cooler lid with strapping tape, encircling the cooler several times.
2. Place COC seals on two sides of the lid (one in front and one on the side).
3. Place "This Side Up" arrows on the sides of the cooler.

The coolers will then be delivered to the appropriate laboratory by the sampling team or by overnight courier the day of sample collection. Each day's sample shipment will be reported to the RSCC Coordinator. For Friday shipments, the RSCC must be contacted prior to 12:00 noon to coordinate with laboratories that will receive sample shipments on Saturday. Samples will only be shipped on Friday if the laboratory provides assurance that analytical holding times will not be exceeded.

6.6.2 Sample Labeling

The following information will be written on each sample container label with a permanent marker and will be covered with clear plastic tape:

- Sample location number (if the contract laboratory program [CLP] sticker is used)
- Case number, if applicable
- Type of analysis requested
- Preservative used
- Date and time collected

Custody seals will be placed over the lids of each sample container. Custody seals on the VOA vials will be placed around the lid to prevent covering the septum.

Immediately following sample collection, the filled sample containers with completed labels will be sealed with custody seals, placed in plastic resealable bags, and placed in a cooler containing ice. VOA vials (three vials per sample) will be wrapped together in bubble wrap, secured with tape, and placed into labeled, plastic resealable bags. All other glass bottles will be bubble-wrapped, and placed into labeled plastic resealable bags.

6.6.3 Sample Documentation

6.6.3.1 Field Notebooks

Bound and numbered logbooks will be used to record all sampling information. Information in the logbooks will include, at a minimum, the following:

- Name and title of the recorder, and date and time of entry
- General description of weather conditions

- Personnel involved with the activities
- Photographic log, if appropriate
- Sampling location and description
- Location of duplicate and QC samples, date and time of collection, parameters to be analyzed, sample ID numbers, blank ID numbers, whether or not split samples were collected, and if so, for whom
- Condition of well being sampled
- Serial number and calibration of field instruments
- Record of parameter values obtained during purging
- Time of sampling
- Sample description
- Shipping addresses for laboratories
- Names of visitors, their associations, and purpose of visit
- Unusual activities such as departures from planned procedures
- References to important telephone calls

All logs will be completed, signed, and dated by the recorder. All information recorded in the logs will be written with waterproof ink. Corrections will be made by crossing out the error with a single horizontal line, initialing the correction, and entering the correct information. Crossed-out information must be readable.

6.6.3.2 Chain-of-Custody Forms

Chain-of-custody procedures will be used to maintain and document sample collection and possession. After sample packaging, the following one or more of the COC paperwork forms will be completed, as necessary, for the appropriate samples:

- Organic traffic report and chain-of-custody record
- Inorganic traffic report and chain-of-custody record
- EPA Region IX Chain-of-Custody Record
- Overnight shipping courier air bill

Copies of the above forms will be filled out and distributed per instructions for sample shipping and documentation in Appendix C. In addition, carbon disulfide, tertiary butyl alcohol, methyl isobutyl ketone, and methyl ethyl ketone will be added to the list of VOCs analyzed by the laboratory. This will be noted on the COC that accompanies the samples to the laboratory. Completed field quality assurance/quality control summary forms will be sent to the RSCC at EPA's Region IX QAO at the conclusion of each sampling event.

6.7 Quality Control Samples

The QC samples will be collected or prepared to assist in determining data reliability. These QC samples include field duplicates, field blanks, and laboratory QC samples (for matrix spike [MS] and matrix spike duplicates [MSDs]. The QC samples are normally collected from locations that are suspected to be of moderate contamination. The QC samples will be collected immediately following, and using the same procedures as, the collection of the target sample.

6.7.1 Field Duplicates

The field duplicate is an independent sample collected as close as possible to the original sample from the same source and is used to document sampling precision. Field duplicates will be labeled and packaged in the same manner as other samples so that the laboratory cannot distinguish between samples and duplicates. Field duplicates will be collected by alternately filling sample and sample duplicate containers at a location of known or suspected contamination. Each duplicate will be taken using the same sampling and preservation method as other samples. Field duplicates will be collected at a minimum frequency of one in every 10 samples. Section 5 presents the number of field duplicates expected to be collected during the scheduled sampling events.

6.7.2 Field Blanks

The field blanks are collected to verify that contamination is not introduced to samples during collection, handling, or shipping of the samples. They will be prepared by pouring blank water directly into the sample bottles (true field blanks) or by pouring blank water over or through decontaminated sampling equipment (equipment blanks). Commercially prepared HPLC water will be used for organic analyses and reagent-grade deionized water for inorganic analyses using the same preservation methods and packaging and sealing procedures used during collection of groundwater samples. Field blanks will be prepared and labeled in the same manner as the field samples and sent "blind" to the laboratory. During groundwater sampling a field blank will be collected at the first sampling location each day. During sampling of the investigation derived wastes, the number of blanks collected will be equal to 10 percent of the waste samples collected or one per week, whichever is greater. Section 5 presents the number of and type of blank samples expected to be collected during the scheduled sampling events.

6.7.3 Laboratory QC Samples

Laboratory QC samples will be collected to perform MS and MSD analyses. An MS is an aliquot of a sample spiked with a known concentration of target analytes and provides a measure of the method accuracy. The MSD is a laboratory split sample of the MS, and is used to determine the precision of the method.

Twice the normal water volume will be collected for laboratory QC samples. Laboratory QC samples will be labeled as such on sample bottles and paperwork. The MS/MSDs will be collected at the discretion of the field crew, at a frequency of one in every 20 consecutively collected samples or one per week, whichever is greater. Section 5 presents the number of MS/MSDs expected to be collected during the scheduled sampling events.

6.7.4 Temperature Blanks

Temperature blanks will be included with each cooler shipment containing samples (regardless of targeted analysis) sent to the laboratory. A temperature blank consists of a VOC sample vial filled in the field with de-ionized water, handled like an environmental sample, and returned to the laboratory for analysis. The temperature blank provides a means of verifying that samples have been maintained at the proper temperature (4 °C) following collection and during transport to the laboratory.

This page intentionally left blank.

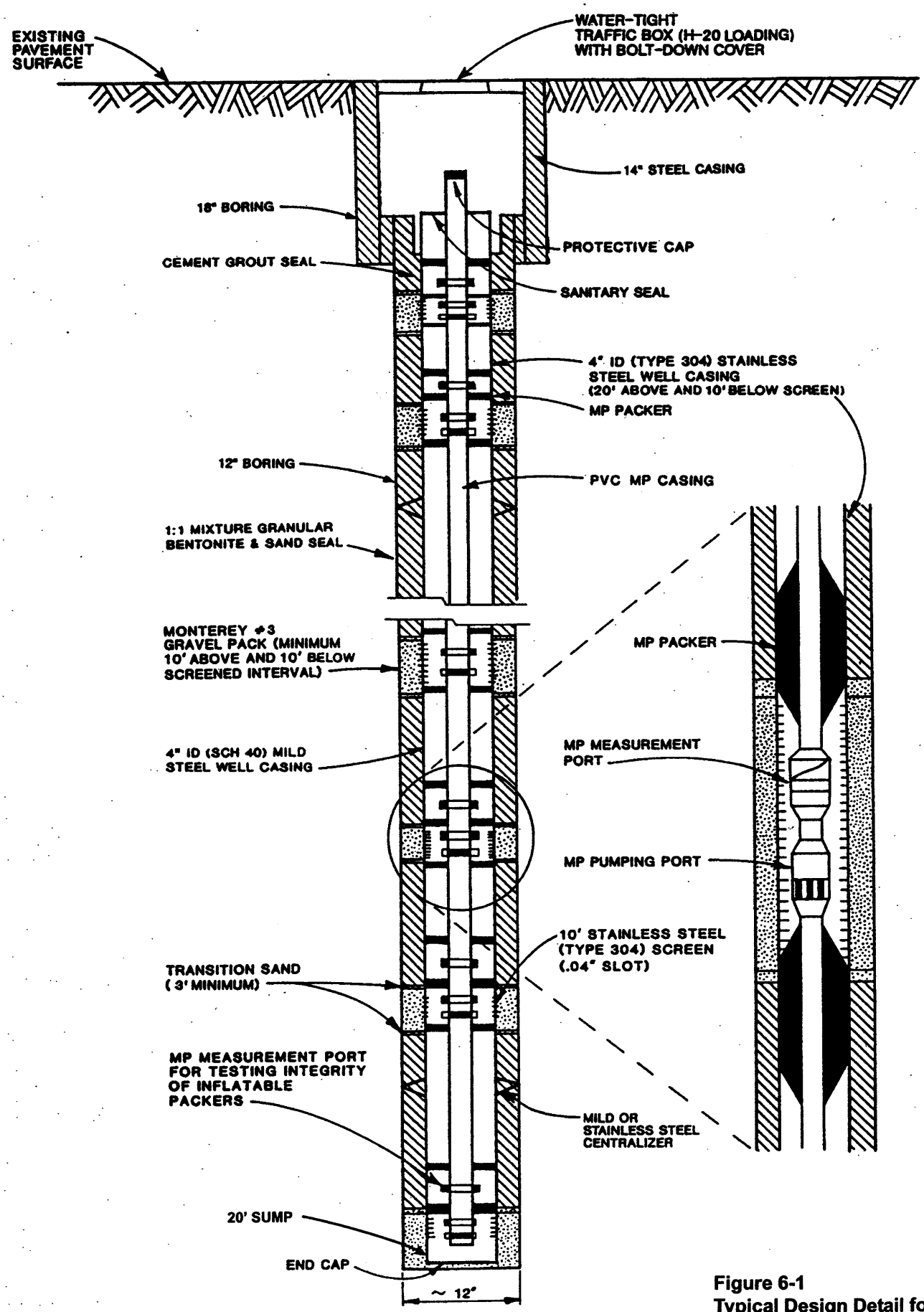

FIGURE NOT TO SCALE

Figure 6-1
Typical Design Detail for Multi-Port Monitoring Well

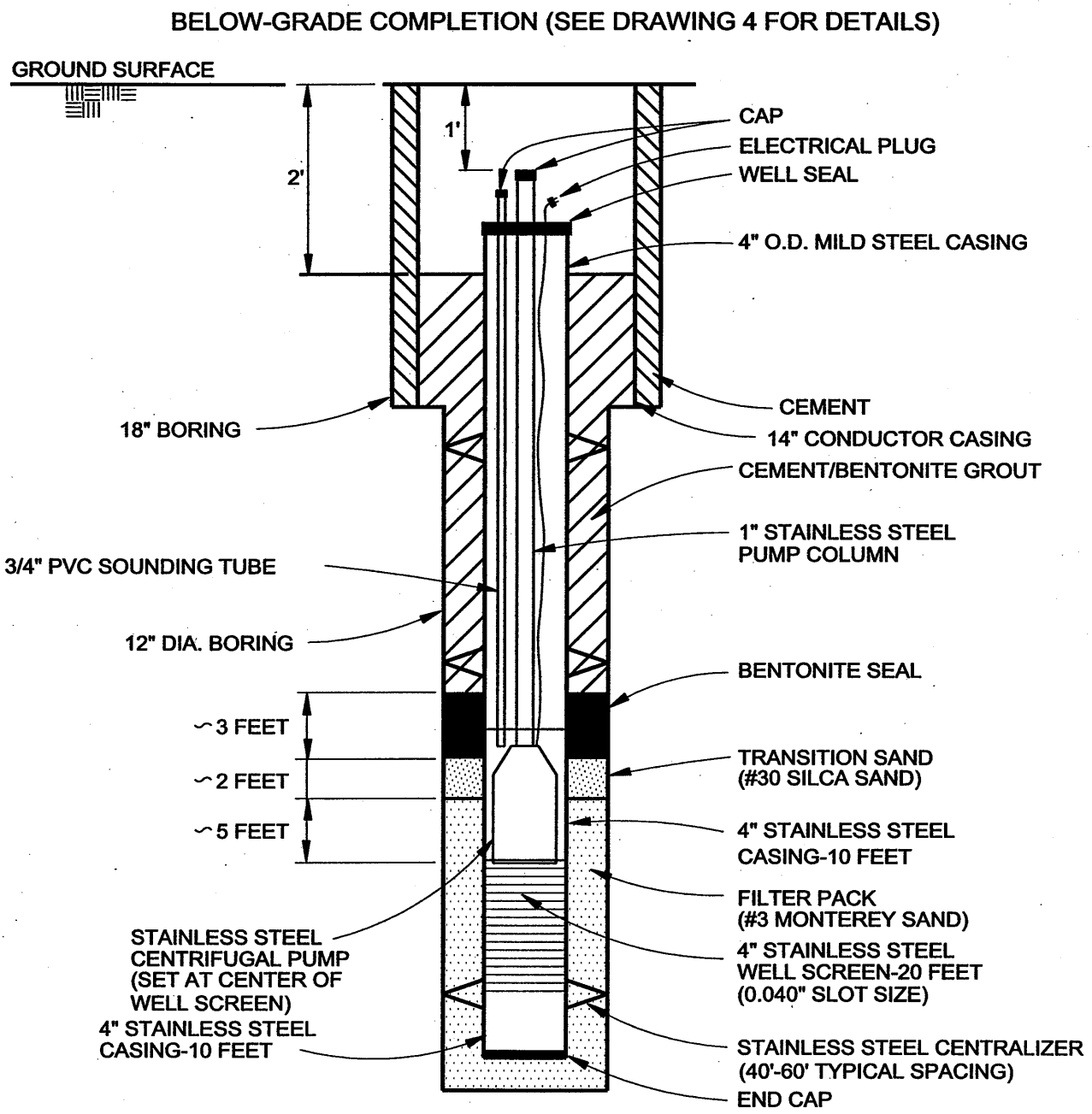

Figure 6-2
Typical Design Detail for
4-inch Cluster Well

NOT TO SCALE

NDM:WALKUP:Alhambra:Figure 6-2.dwg 9/11/02

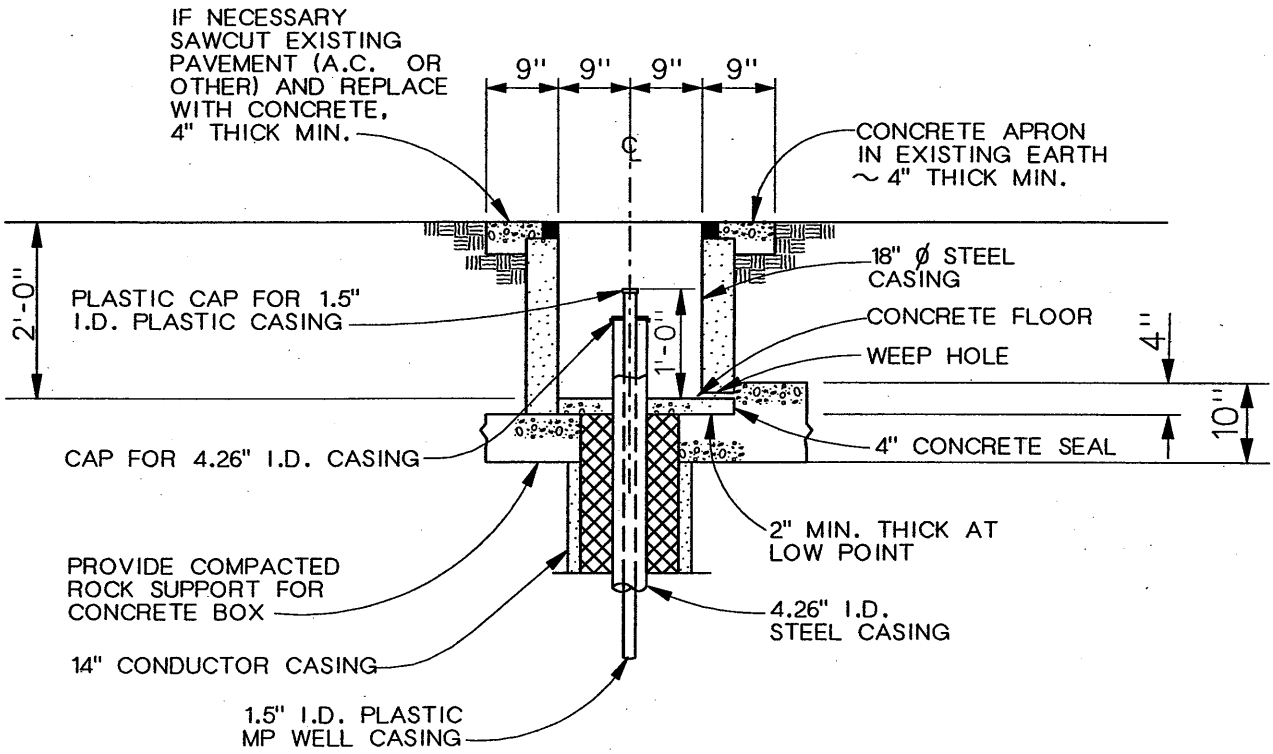

SECTION A-A

½"=1'

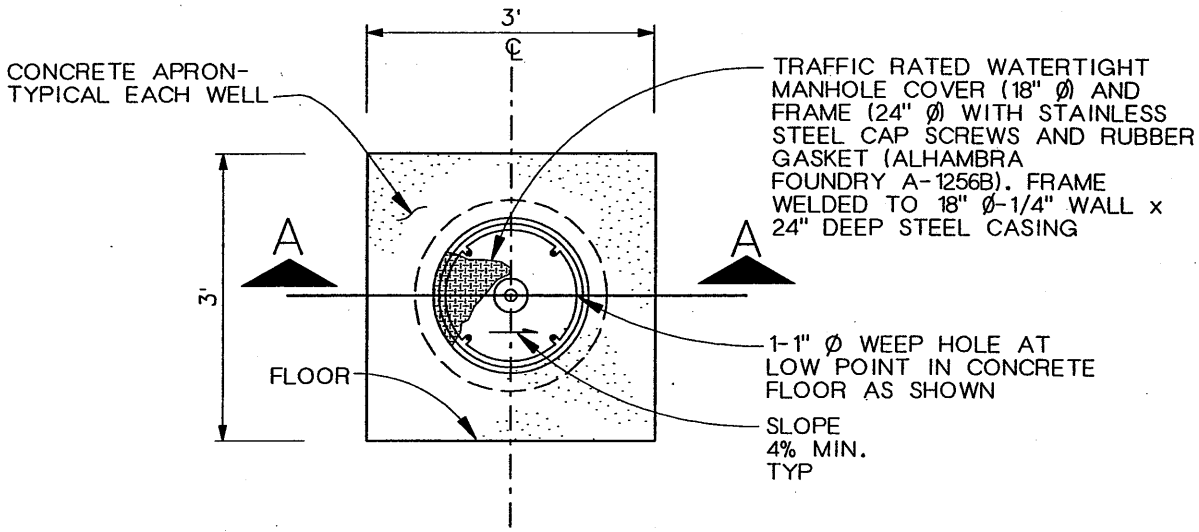

VAULT AND PIPE ASSEMBLY DETAIL

1

½"=1'

Figure 6-3
Below Grade
Surface Closure
Construction Details
For Monitoring Wells

Section 7
Health and Safety Plan

The Health and Safety Plan for the activities described in this FSP is provided in Appendix D.

Section 8
References

California Department of Water Resources. *Bulletin 45. South Coastal Basin Investigation.* Eckis, Rollin. 1934.

———. *Bulletin 104-2. San Gabriel Valley: Appendix A.* 1966.

U.S. Environmental Protection Agency. *Guidance for Preparation of a U.S. EPA Region IX, Field Sampling Plan for EPA-Lead Superfund Project.* 1993.

———. *Draft Quality Assurance Project Plan for San Gabriel Valley NPL Area 3 Remedial Investigation Field Activities.* Prepared by CH2M HILL. September 2002.

———. *Interim San Gabriel Basin Remedial Investigation Report, Los Angeles County, California.* Prepared by CH2M HILL. June 15, 1992.

———. *Alhambra Operable Unit, Draft Data Evaluation Report.* Prepared by CH2M HILL. January 2001.

Appendix A
Analytical Program
Technical Specifications

Appendix A
Analytical Program Technical Specifications

Contents

A-1	TCL Volatile Organic Compounds (VOCs) plus MTBE
A-2	1,4-Dioxane
A-3	N-Nitrosodimethylamine (NDMA).
A-4	Perchlorate
A-5	Hexavalent Chromium
A-6	TAL Metals (field filtered)
A-7	Anions: Nitrate-N
A-8	1,2,3-Trichloropropane
A-9	Semivolatile Organic Compounds
A-10	Flashpoint
A-11	pH
A-12	8260 VOCs
A-13	Total Petroleum Hydrocarbons-CA LUFT
A-14	TTLC Metals

Appendix A-1
TCL Volatile Organic Compounds (VOCs) plus MTBE

USEPA REGION 9 LABORATORY
RICHMOND, CALIFORNIA

STANDARD OPERATING PROCEDURE #354

VOLATILE ORGANICS ANALYSIS
(524.2 Reference Method)

Signature & Title

Prepared by: _____ _____
Li-Pin Lee, ESAT Region 9, ICF Consulting Date

Reviewed by: _____ _____
Richard Bauer, Chemistry Team Leader Date

Approved by: _____ _____
Brenda Bettencourt, Laboratory Director Date

Periodic Review:

Signature	Title	Date

STANDARD OPERATING PROCEDURE #305

VOLATILE ORGANICS ANALYSIS

This SOP was prepared by ICF Consulting for the United States Environmental Protection Agency (USEPA) under the Environmental Services Assistance Team (ESAT) contract (EPA contract No. 68-W-01-028).

APPROVED BY:

Nicholas Kish, Organic Group Leader	Date
Surender Kaushik, QA Task Manager	Date
Jerry Vail, ESAT Program Manager	Date

ESAT Document Control Number: B0101029-0498

TABLE OF CONTENTS

1 SCOPE AND APPLICATION 4

2 METHOD SUMMARY 4

3 DEFINITIONS 4

4 HEALTH & SAFETY 6

5 SAMPLE HANDLING AND PRESERVATION 7

6 INTERFERENCES 8

7 APPARATUS AND MATERIALS 9

8 QUALITY CONTROL 10

9 ANALYTICAL PROCEDURES 26

10 DOCUMENTATION 37

11 REFERENCES 43

APPENDIX A - SOP Deviations from reference method
APPENDIX B - Analyte List
APPENDIX C - Calibration and Quality Control Criteria
APPENDIX D - Purge and Trap Concentrator Parameters
APPENDIX E - GC and MSD Parameters
APPENDIX F - Data File Naming Convention

1 SCOPE AND APPLICATION

This Standard Operating Procedure (SOP) describes the procedures used for the analysis of volatile organic compounds (VOC's) in the USEPA Region 9 Laboratory in Richmond, California. The procedures reference EPA method 524.2, Revision 4.1, 1995. The compounds which may be determined using this SOP are listed in Appendix B.

This SOP is applicable to the analysis of surface water, ground water, and drinking water for VOC's in support of the EPA's Superfund, RCRA, WQM, NPDES, UIC, and SDWA programs. The applicability of these procedures to specific project data quality objectives (DOQ's) must be assessed on a case by case basis. The quality control (QC) criteria specified in this SOP meet compliance criteria for drinking water and NPDES monitoring projects.

2 METHOD SUMMARY

VOC's are purged from a 25mL water sample in a fritted sparge cell. An inert gas (helium) is bubbled through the sample in the sparge cell, which causes the purgeable VOC's to be transferred from the aqueous sample to the vapor phase. The vapor phase is swept through a trap, containing an adsorbent material at ambient temperature, where the VOC's are trapped. After the purging of the sample is completed, the adsorbent trap is heated and back flushed with helium which desorbs the VOC's onto a capillary column in a gas chromatograph (GC). The VOC's are separated in the GC column and detected by a mass spectrometer (MS).

The samples are fortified with internal standards (IS) and surrogate compounds (SUR) before they are purged. The target VOC's and surrogate compounds are identified in the sample by analyzing standards under the exact same conditions employed for samples, and comparing the resulting mass spectra and GC retention times. A response factor is established for each target and surrogate compound during the initial and continuing calibrations by comparing the MS response of the primary ion produced by the target and surrogate compounds to the MS response for the primary ion produced by the associated internal standard. Each target and surrogate compound is quantitated by comparing the responses of the target and surrogate compound responses to the internal standard responses, using the average response factors from the most recent initial calibration.

Non-target compounds are identified by comparing the resulting mass spectra of the non-target compound to the mass spectra contained in the National Institute of Standards and Technology (NIST) Library in the MS database. An estimated quantitation is performed for the non-target compounds by comparing the total MS response to the nearest internal standard total MS response, assuming a relative response factor of 1.0.

3 DEFINITIONS

3.1 Laboratory Reagent Blank (LRB) - Commonly referred to as a Method Blank. An aliquot of reagent water that is treated exactly as a sample including exposure to all glassware, equipment, solvents, and surrogates that are used with other samples. The method blank is used to determine if method analytes or other interferences are present in the laboratory environment, the solvents, or the equipment.

3.2 Laboratory Fortified Blank (LFB) - Referred to as a Laboratory Control Sample (LCS) in this SOP. An aliquot of reagent water to which known quantities of the method analytes are added. The LCS is treated exactly as a sample. The LCS is used to determine whether the methodology is in control and to indicate the accuracy associated with laboratory procedures. For this SOP, the LCS is prepared using a second source standard, and thus also acts as an independent quality control sample (QCS).

3.3 Laboratory Fortified Sample Matrix (LFM) and Laboratory Fortified Sample Matrix Duplicate (LFMD) - Commonly referred to as Matrix Spike (MS) and Matrix Spike Duplicate (MSD). Two aliquots of the same sample to which known quantities of the method analytes are added. The MS and MSD are treated exactly as a sample. The MS and MSD are used to determine whether the sample matrix contributes bias to sample results and to indicate the precision associated with laboratory procedures. The MS samples are fortified to the midpoint of the calibration curve with a subset of the target compounds.

3.4 QL Standard - An aliquot of reagent water containing method analytes at a concentration of 0.5 g/L. The QL standard is used to demonstrate the ability to analyze low level samples for the State of California.

3.5 Stock Standard Solution (SSS) - A concentrated solution containing one or more method analytes prepared in the laboratory using pure standard materials or purchased from a reputable commercial source.

3.6 Primary Dilution Standard Solution (PDS) - A solution of the method analytes prepared in the laboratory from the stock standard solutions and diluted as needed to prepare calibration solutions and other needed solutions of method analytes.

3.7 Calibration Standard (CAL) A solution prepared from the primary dilution standard solution and/or the stock standard solutions containing the method analytes. The CAL solutions are used to calibrate the instrument response with respect to analyte concentrations.

3.8	GC/MS	Gas Chromatograph / Mass Spectrometer
3.9	BFB	Bromofluorobenzene, the compound used as the system performance check for the GC/MS. Also used as a surrogate.
3.10	IS	Internal Standard
3.11	SUR	Surrogate Compound, also known as System Monitoring Compound in other methods
3.12	FC43	Perfluorotributylamine. Compound used to tune the MS.
3.13	QL	Quantitation Limit (see Appendix B).
3.14	RIC	Reconstructed Ion Chromatogram
3.15	NIST	National Institute of Standards and Technology

4 HEALTH & SAFETY

4.1 The toxicity or carcinogenicity of each reagent used in this method has not been precisely defined; however, each chemical compound should be treated as a potential health hazard. From this viewpoint, exposure to these chemicals should be minimized through the use of personal protective equipment and laboratory engineering and design. A reference file of material safety data sheets (MSDS) is available to all personnel involved in the chemical analysis and can be found in the library (Room 118) or Room 413.

4.2 The following analytes covered by this method have been tentatively classified as known or suspected, human or mammalian carcinogens: benzene, carbon tetrachloride, chloroform, methylene chloride and vinyl chloride. Primary standards of these toxic compounds must be prepared in a hood. Routine procedures in this SOP do not require contact with concentrated or neat solutions of these materials. All standard preparation procedures associated with this SOP should be performed in a hood.

4.3 Methanol is the primary solvent used for the preparation of standards in this procedure. Methanol is harmful if inhaled and may be fatal or cause blindness if ingested. Symptoms of overexposure via inhalation are drowsiness and intoxication, headache, visual disturbances leading to blindness, coughing and shortness of breath, collapse, and death at high concentrations. Skin contact may result in absorption producing toxic effects. Repeated skin contact may cause burning, itching, redness, blisters or dermatitis. Eye contact can cause burning, watering, redness and swelling. High vapor concentration will result in similar symptoms in the eyes. Medical attention must be sought whenever symptoms of inhalation or ingestion are observed as many effects are delayed due to the slow rate of metabolism.

Methanol is classified as a flammable solvent and must be handled accordingly. Use methanol in a laboratory fumehood. The analyst must wear appropriate personal protective equipment (laboratory coat, nitrile gloves and safety glasses). Store methanol in a flammables storage cabinet away from oxidizers and sources of ignition.

4.4 Due to the unknown and potentially hazardous characteristics of samples all sample handling and preparation must be performed in a laboratory fumehood.

5 SAMPLE HANDLING AND PRESERVATION

5.1 Sample receipt at the Region 9 Laboratory is performed under strict chain-of-custody procedures.

5.2 Samples for 504 analysis are delivered by the Sample Custodian to room 201, logged into the Internal Chain of Custody log, and transferred to the sample refrigerator. Maintain the refrigerator at 4 C ± 2 C. Record the refrigerator temperatures daily in the temperature logbook as described in SOP 805. Do not store samples and standards in the same refrigerator.

5.3 Check the following information to ensure that the information on the sample containers corresponds to the information on the tracking sheets and the chain-of-custody record.

5.3.1 EPA sample number.

5.3.2 Region 9 Laboratory number.

5.3.3 Case number.

5.3.4 Sample Delivery Group number.

5.4 Confirm that the integrity of the samples has not been compromised by checking the samples for the following items. Note any problems in the injection logbook and in the case narrative.

5.4.1 Broken chain-of-custody seals on the sample containers.

5.4.2 Leaking or broken sample containers.

5.4.3 Altered sample information on the sample containers.

5.4.4 The presence of headspace or air bubbles.

5.5 Sort samples according to date sampled, so that samples can be analyzed in order of date sampled to prevent missed holding times.

5.6 Samples must be analyzed in an efficient and timely manner such that no analytical holding times are exceeded. Generally, samples should be analyzed on the GC/MS system which is set up to analyze samples for SOP 354 (other analyses are performed in the Region 9 VOA Laboratory). Samples should be analyzed in the order of their sampling date, if possible.

5.7 Analyze water samples which are preserved with acid within 14 days of the time of sampling. Analyze unpreserved samples within 7 days of the time of sampling.

Note: Drinking water compliance samples must be dechlorinated and preserved with acid to pH < 2 at the time of sampling. These samples have a maximum holding time of 14 days from the time of sampling. Drinking water samples that are not preserved must be resampled and preserved correctly before a valid analysis can be performed. If an unpreserved drinking water sample is received, inform the EPA Chemistry Team Leader immediately so that the proper notifications can be made.

5.8 Store excess samples at 4 C ± 2 C in the sample refrigerators in rooms 201or 209. Thirty (30) days after the close date for an SDG remove the excess samples for the entire SDG from refrigerated storage and place on the shelves in Room 211, for a period of 60 days after the submission of the data deliverables associated with the sample delivery group (SDG). After 60 days, the samples may be disposed of in the appropriate manner as specified in SOP 125, unless otherwise directed by the EPA Chemistry Team Leader.

6 INTERFERENCES

6.1 Method interference may be caused by impurities in the purge gas, organic compounds out-gassing from the plumbing ahead of the trap, and solvent vapors in the laboratory. The analytical system must be demonstrated to be free from contamination under the conditions of the analysis by running laboratory method and instrument blanks as described in Section 9. The use of non-polytetrafluoroethylene (PTFE) tubing, non-PTFE thread sealants, or flow controllers with rubber components in the purging device should be avoided.

6.2 Samples can be contaminated by diffusion of volatile organics (particularly fluorocarbons and methylene chloride) through the septum seal into the sample during storage and handling.

6.3 Contamination by carryover can occur whenever high level and low level samples are sequentially analyzed. To reduce carryover, the purging device and sampling syringe must be rinsed with reagent water between sample analyses. For samples containing large amounts of water-soluble materials, suspended solids, high-boiling compounds, or high purgeable levels, it may be necessary to wash out the purging device with a detergent solution between analyses, rinse it with distilled water, and then dry it in an oven at 105 C. The trap and other parts of the system are also subjected to contamination; therefore, frequent bakeout and purging of the entire system may be required.

6.4 Solvents and other compounds which are target analytes must never be introduced into the laboratory where volatiles analysis is performed. Methylene chloride, acetone and other common laboratory chemicals are target analytes under this SOP and must be excluded from Room 201. Particular attention must be paid to the possibility of transport of solvent vapors on individuals. Analysts should never enter Room 201 after being in the extraction laboratories or glassware washing area (acetone is used to remove writing from glassware).

7 APPARATUS AND MATERIALS

7.1 The volatiles laboratory has three GC/MS instruments for the analysis of volatile organic compounds. The components of each system are summarized in the table below. All three systems may be used to analyze samples following this SOP.

Region 9 GC/MS Volatiles Analytical Systems

System Name	HP5973J	HP5973H	HP5973K
Purge and Trap Concentrator	Hewlett Packard (Tekmar 3000)	Hewlett Packard (Tekmar 3000)	Tekmar LSC 2000
Autosampler	Varian Archon	Varian Archon	Tekmar ALS 2016
Gas Chromatograph	HP 6890 plus	HP6890 plus	Agilent 6890 Plus
Mass Spectrometer	HP 5973	HP5973	Agilent 5973 Network
Data System	HP Chemstation	HP Chemstation	HP Chemstation
Analytical Column	RestekRTX-VMS 30M x 0.25 mm, 1.40 micron film	HP-624 25M x 0.20 mm, 1.12 micron film	HP-624 25M x 0.20 mm, 1.12 micron film

Other GC/MS systems with similar configurations can be used to analyze samples following this SOP as long as the instrumentation meets the QC limits of this SOP.

7.2 Standard solutions (Region 9 Laboratory SOP 255).

7.2.1 4-Bromofluorobenzene Tuning Solution (BFB Solution, 50 ng/μL).

7.2.2 Drinking water surrogate & IS solution (DWIS mix, 50 ng/μL) for Tekmar ALS 2016 Autosampler and (DWISA mix, 125 ng/μL) for Varian Archon Autosampler.

7.2.3 Drinking water calibration mix (DW mix, 25 ng/μL)

7.2.4 LCS (Laboratory Fortified Blank) Solution (DWLF solution, 25 ng/μL)

7.2.5 Matrix Spike solution (DWMS solution, 50 ng/uL)

7.3 Organic-free method blank water (Region 9 Laboratory SOP 205).

7.4 Gas-tight syringes (5-μL, 10-μL, 25-μL, 50-μL, 100-μL, 250-μL, 500-μL, 1-mL, 5-mL, 25-mL and 50 mL).

7.5 25-mL fritted sparge vessels

7.6 25-mL Fritless sparge vessels.

7.7 Stainless steel spatulas.

7.8 Disposable Pasteur pipettes.

7.9 Methanol (Purge & Trap grade).

7.10 pH paper (pH 0-14 range).

7.11 Trap K (VOCARB 3000, or equivalent)

7.12 40-mL VOC vials for standards with screw-hollow cap lined with 22 mm PTFE-faced silicone septa.

8 QUALITY CONTROL

This section describes the QA/QC criteria which must be followed in the analysis of samples for volatile organic compounds.

8.1 Drinking Water Compliance samples. If samples are to be analyzed for compliance with Safe Drinking Water Act, all regulated analytes listed in Appendix B must meet the QC criteria listed in Appendix C. Analyses for other programs may use shortened analyte lists.

8.2 Initial Demonstration of Performance

8.2.1 For each instrument and analyst, the performance of the analytical system must be demonstrated. This demonstration consists of the successful analysis of a method blank (LRB), a demonstration of precision and accuracy, and an acceptable Method Detection Limit (MDL) study. Perform the demonstration of analyst proficiency and instrument capability in accordance with EPA Region 9 Laboratory SOP #880, *Initial and Continuing Demonstration of Capabilities and Performance*

8.2.2 The method blank analyzed for the initial demonstration must meet the requirements of Section 8.8.

8.2.3 Calculate the MDL in accordance with 40 CFR Part 136, Appendix B or in Section 13 of method 524.2, Revision 4.1, 1995. For seven replicates the formula is: MDL(g/L) = SD × 3.143. Where SD is the sample standard deviation of the concentration obtained from the seven replicate runs for the analyte and 3.143 is Student's t value for seven replicates.

8.2.4 Acceptance criteria: The MDL must be less than or equal to one-half the method QL and analyte recoveries must be between 80% to 120%.

8.3 Mass calibration.

8.3.1 Calibrate the mass axis of the mass spectrometer whenever the mass spectrometer is shut down, or whenever there is a mass misassignment. Mass calibration is performed to ensure the accurate assignment of masses to ions generated in the ion volume of the mass spectrometer. Perfluorotributylamine (FC43) is used to perform the mass calibration of the instrument. The FC43 spectrum must meet the following criteria:

Mass	Target % of Mass 69
69	100
131	25.0-75.0
219	25.0-60.0
414	1.4-4.0
502	0.8-4.0

Isotope Ratio

Mass Ratio	Target %
70/69	0.8-1.3
132/131	2.0-3.4
220/219	3.5-5.2
415/414	7.2-10.8
503/502	8.1-12.1

8.3.2 If the FC43 spectrum does not meet the criteria listed above, corrective action must be taken; this may be as simple as adjusting the voltages/ retuning the MS. If retuning the MS does not produce adequate FC43 spectra, further maintenance such as cleaning the ion source may be required.

8.4 GC/MS System Performance Check (BFB analysis.)

8.4.1 Prior to the analysis of any calibration standards, blanks, and samples (including LFM/LFMDs), the GC/MS system must meet the mass spectral ion abundance criteria for bromofluorobenzene (BFB). Proper tuning of the instrument is necessary to produce standardized fragmentation patterns of target and non-target compounds.

8.4.2 Frequency of GC/MS Performance Check.

8.4.1.1 Inject BFB once at the beginning of each 12-hour period during which standards, blanks and samples are to be analyzed. The twelve-hour time period begins at the moment of injection of the BFB and ends after twelve hours have elapsed. Samples analyzed after the 12-hour time period have elapsed must be re-analyzed.

8.4.3 Analyze the BFB according to Section 9 of this SOP.

8.4.4 The ion abundance ratios must meet the following criteria.

Mass (m/z)	Relative Ion Abundance Criteria
50	15 - 40 percent of mass 95
75	30 - 80 percent of mass 95
95	Base peak, 100 percent relative abundance
96	5 - 9 percent of mass 95
173	< 2 percent of mass 174
174	>50 percent of mass 95(Mass 95 must be base peak)
175	5 - 9 percent of mass 174
176	95 - 101 percent of mass 174
177	5 - 9 percent of mass 176

8.4.4.1 If the ion abundances fail to meet the criteria listed above the BFB chromatogram should be examined for any obvious chromatographic problems (e.g. bad injection leading to poor response, etc.). If the problem is determined to be related to poor chromatography take the necessary corrective action and re-analyze the BFB. If the BFB continues to fail the ion abundance criteria retune the mass spectrometer. It may also be necessary to clean the ion source or take other corrective action to achieve the ion abundance criteria.

8.5 Initial calibration (ICAL).

8.5.1 Each GC/MS system must be calibrated whenever corrective action is performed which may change instrument response (e.g., ion source cleaning, column replacement, etc.) or if the continuing calibration acceptance criteria can not be met.

8.5.2 The initial and continuing calibration criteria are listed in Appendix C.

8.5.3 If an ICAL fails because of one standard, a fresh solution of that standard may be re-analyzed and substituted for the standard that failed in the ICAL. If more than one standard fails, corrective action is required.

8.5.4 Analyze the ICAL standards according to Section 9 of this SOP.

8.5.5 No quantitation ion may saturate the detector.

8.5.6 The data system calculates the relative response factor (RRF) for each target compound and surrogate compound for all five calibration standards using equation 1. The quantitation ions and internal standard assignments are listed in Appendix B.

Eq. 1

$$RRF = (A_x)(C_{is}) / (A_{is})(C_x)$$

Where
Ax = Area of quantitation ion of compound x
Ais = Area of quantitation ion for associated internal standard
Cx = Concentration of compound x
Cis = Concentration of the associated internal standard

8.5.7 Calculate the average RRF for all analytes

8.5.8 Calculate the percent relative standard deviation (%RSD) of the RRF values for each compound using equation 2.

EQ. 2

$$\%RSD = (SD/ RRF_{avg})*100$$

$$SD \sqrt{\frac{\sum_{i=1}^{n} (x_i - x_{ave})^2}{n-1}}$$

8.5.9 Process and check the data files immediately after the initial calibration is completed to ensure that the calibration QC criteria have been satisfied (see Appendix C). If a sample is for drinking water compliance, all regulated compounds must meet QC criteria. If any of the criteria have not been met because of a single concentration point in the curve, then that single point can be reanalyzed once, and the data checked against the criteria. If the failure is repeated (or the problem is not isolated to one calibration point) the system must be repaired so that the criteria are satisfied before any samples are analyzed. If repairs are made to the system, then a new initial calibration must be performed. Check the initial calibration for misidentified peaks due to retention time shifts. The most commonly misassigned compounds are the 1,3- and 1,4-dichlorobenzenes.

8.5.10 If the initial calibration meets all the specified criteria, the remainder of the 12-hour analytical period may be used for the analysis of blanks and samples, using the average RRF from the ICAL to quantitate the QC and field sample data.

8.5.11 Manual integration. There will be instances when the data system will not produce accurate integrations. Examples of this are misidentification of a peak, inaccurate dropping of a perpendicular between peaks, or failure to integrate the entire tail of a peak. When necessary, chromatograms can be manually integrated if the following steps are taken (see USEPA Region 9 Laboratory SOP # 835, *Chromatographic Integration Procedures*):

8.5.11.1 Print a view of the chromatogram to be reintegrated using QEDIT. Include the background subtracted spectrum of the apex of the peak and the reference spectrum. Indicate the reasons for manually integrating the chromatographic results on the chromatogram and initial and date the statement.

8.5.11.2 Reintegrate the peak and print the new view. Save the reintegrated value(s). Print the peak and reference spectra. Document the manual integration on the reintegrated chromatogram and initial and date the statement.

8.5.11.3 Print the new quant report and chromatogram after all manual integrations have been completed. Indicate each manual integration on the new quant report. Document the fact that there was manual integration in the instrument run log.

8.5.11.4 Show the chromatograms, quant reports and log book to a group leader, QA/QC Task Manager, or Program Manager for review and acceptance.

8.6 Continuing Calibration

8.6.1 A continuing calibration standard must be analyzed at the beginning of each 12-hour analytical period (see Section 8.4.2 for definition of 12-hour time period). If the continuing calibration meets acceptance criteria listed in Appendix C, the average response factor from the initial calibration is used to quantitate analytical results during the associated 12-hour time period.

8.6.2 The initial and continuing calibrations must meet the criteria listed in Appendix C.

8.6.3 Analyze the continuing calibration standard according to Section 9 of this SOP.

8.6.4 Calculate the relative response factor (RRF) for each target compound and surrogate compound using equation 1. The quantitation ions and internal standard assignments are listed in Appendix B.

8.6.5 Calculate the percent difference (%D) between the continuing calibration RRF and the most recent initial calibration average RRF for each target compound and surrogate using equation 3.

EQ 3.

$$\%D \quad \frac{RRF_c \quad RRF_{avg}}{RRF_{avg}} \times 100$$

8.6.6 Compare the %Ds with the maximum %D criteria listed in Appendix C. Up to 10 % of the compounds may fail to meet the criteria, but if the samples are for drinking water compliance, all regulated compounds must meet the criteria. If the criteria are not satisfied a second continuing calibration may be analyzed. Repeated failure requires the analysis of a new initial calibration. If repairs to the system are required then a new initial calibration must be performed.

The analyst should observe trends in the data such as declining response, erratic relative response, loss of classes of compounds, etc. which may signal the need for instrument maintenance.

Check the continuing calibrations for mis-identified peaks due to retention time shifts. The most commonly mis-assigned compounds are the 1,3- and 1,4-dichlorobenzenes.

8.7 Quantitation Limit (QL) Standard

8.7.1 Analyze a low level quantitation standard at 0.5 μg/L immediately after the initial or continuing calibration for each 12-hour analytical period. This analysis demonstrates the ability to analyze samples at levels specified by the State of California.

8.7.2 Analyze the low level quantitation standard according to Section 9 of this SOP.

8.7.3 The observed concentration of the five compounds -- vinyl chloride, 1,2-dichloroethane, carbon tetrachloride, cis-1,3-dichloropropene, and trans-1,3-dichloropropene -- must be greater than or equal to 0.25 μg/L and less than or equal to 0.75 μg/L (50 -150 % recovery).

8.7.4 If the requirements of 8.7.3 are not met corrective action must be taken. The standard can be reanalyzed once. Repeated failure indicates that maintenance is required to improve instrument response.

8.8 Laboratory Control Sample (LCS)

Analyze an LCS daily to demonstrate that the calibration standards used to calibrate the instrument are appropriate. Specifically the LCS verifies that the standards include the appropriate compounds at the correct concentration. Prepare the LCS spiking mixture from a source (or sources) entirely separate from those used to calibrate the instrument. The LCS must be analyzed once per 12 hour tune period.

8.8.1 Prepare the LCS as a method blank except also add the volume of the LCS STD which results in a concentration equal to the concentration of the mid-level calibration standard.

8.8.2 Analyze the LCS exactly as a sample is analyzed.

8.8.3 All analytes must be recovered at the percent accuracy specified in Appendix C. The source of any discrepancy should be determined prior to reporting any sample data. This may require preparing fresh standards (either the calibration standard, the LCS, or both) which may require a new initial calibration analysis.

8.9 Method Blank (LRB) analysis.

8.9.1 Analyze a method blank immediately after the calibration standards and the QL verification standard -- before the samples are analyzed -- in order to demonstrate that the instrument is free of contamination.

8.9.2 Analyze the method blank according to Section 9 of this SOP.

8.9.3 Check the method blank RIC and quantitation report immediately after it is analyzed, or as soon as possible, to determine that the following criteria have been met:

The method blank is acceptable if it contains less than 2.5 times the QL of methylene chloride and less than ½ the QL of any other volatile target compound. The total area of any non-target compound detected must be less than 50 percent of the total area of the nearest internal standard. If the blank does not meet these requirements, prepare and reanalyze a new blank before analyzing any samples. If the second blank fails to meet the above criteria corrective action must be initiated and documented.

Note: For drinking water compliance samples, methylene chloride in the method blanks must be less than 0.5 μg/L.

8.9.4 The method blank internal standards must meet the criteria listed in Section 8.12.

8.9.5 The method blank surrogate recoveries must meet the criteria listed in Section 8.13.

8.9.6 All volatile analyses associated with a blank that does not meet the above requirements must be reanalyzed.

8.10 Storage Blank analysis.

8.10.1 Analyze a storage blank once every week. A storage blank is a blank sample which has been preserved with HCl and stored in the same storage area as other samples for VOC analysis at the laboratory. The storage blank indicates whether contamination may have occurred during sample storage.

8.10.2 Every Monday morning, or the first work day of the week, two acidified 40-mL screw-cap volatile vials with PTFE-faced silicone septa must be filled with reagent water and stored with the samples, in the sample storage refrigerator in room 201.

8.10.3 Analyze the storage blank the following Monday, or on the first work day of that week, and new storage blanks placed in the refrigerator.

8.10.4 Analyze the storage blank according to Section 9 of this SOP.

8.10.5 The storage blank internal standards must meet the criteria listed in Section 8.12; if not, reanalysis is required.

8.10.6 The storage blank surrogate recoveries must meet the criteria listed in Section 8.13 or reanalysis is required.

8.10.7 Compare the results of the storage blank analysis to the criteria listed in Section 8.9.3. If the storage blank does not meet these requirements, report the variances in the report narrative and flag the affected analytes with a "J" flag and a "B" qualifier summary of analytical results spreadsheet.

8.11 Instrument Blanks

8.11.1 In the event that a sample is analyzed which exceeds the calibration range of the instrument, an instrument blank must be analyzed on the same autosampler port to demonstrate that the system is free of carryover contamination prior to the analysis of another sample using that autosampler port. Instrument blanks are prepared in the same manner as method blank samples.

8.11.2 Analyze the instrument blanks according to Section 9 of this SOP.

8.11.3 The instrument blank is acceptable if it contains less than or equal to the QL of methylene chloride and less than or equal to ½ the QL of any other volatile target compound. The total area of any non-target compounds detected must be less than 50 percent of the total area of the nearest internal standard. If the instrument blank does not meet these requirements, the autosampler port must be cleaned and a new instrument blank must be analyzed on that autosampler port to demonstrate the absence of contamination before any samples can be analyzed on the autosampler port. This is an iterative process which must be repeated until the port has been demonstrated to be free of contamination.

8.11.4 The instrument blanks can be analyzed beyond the twelve-hour tune time period.

8.11.5 Instrument blanks do not need to meet the surrogate recovery criteria listed in Section 8.13.

8.11.6 Instrument blanks must meet the internal standard criteria listed in Section 8.12.

8.12 Internal standard recovery.

8.12.1 Check the internal standard recovery, determined by total quantitation ion area, for all standards, blanks, samples, and spikes immediately after analysis in order to determine if all applicable criteria have been met.

8.12.2 If the quantitation ion area of any internal standard in any blank, sample, or spike analysis changes by more than (50 -200%) from the average response of the corresponding internal standard from the initial calibration, the system must be checked for malfunctions and the necessary corrections must be made. After the corrections are made, the analyses performed while the system was malfunctioning must be repeated. Keep in mind that many "corrections" to the system will require that the initial calibration be performed prior to reanalysis of the samples.

8.12.3 If after reanalysis, the area for all internal standards are within the criteria, then the problem is considered to have been within the laboratory's control. Report the data from the reanalysis, and submit data from both analyses.

8.12.4 If reanalysis of the sample does not solve the problem, submit the data for both analyses. Distinguish between the analysis and reanalysis by adding an "RE" suffix to the EPA sample number on the reanalysis. The problem must be documented in the report narrative (see Section 11.1.1.1.9).

8.12.5 The internal standard retention times in all samples must be checked immediately after data acquisition. If the retention time for any internal standard changes by more than 15 seconds from the latest daily calibration standard, the system must be inspected for malfunctions, and the necessary corrections made. Compare blanks, samples, and spikes analyzed within the 12-hour analytical period of the initial calibration to the 5 ug/L standard for low detection limit waters.

8.13 Surrogate compound recovery.

8.13.1 The surrogate compound (SUR) recovery in all blanks, samples, and spike must be calculated and checked immediately after analysis and compared to the limits listed in Appendix C. In addition the following should be monitored:

Monitor the integrated areas of the quantitation ions of the surrogates in all samples, continuing calibration checks, and blanks. These should remain relatively constant over time. An abrupt change may indicate a matrix effect or an instrument problem. Low areas also may indicate an inefficient transfer from the trap to the column. A gradual drift of more than 50% from the average response of the corresponding internal standard from the initial calibration, is indicative of a change in sensitivity.

8.13.2 If the recovery of one or more of the surrogate compounds is not within the limits listed in Appendix C, the following steps must be taken.

8.13.2.1 Check to ensure that there are no calculation errors, and check the system performance.

8.13.2.2 Reanalyze the sample if a system performance problem or calculation error is not evident.

8.13.2.3 Do not reanalyze undiluted samples with surrogate recoveries outside the limits if the diluted analysis with acceptable surrogate recoveries is being submitted. Report the event in the runlog and report narrative.

8.13.2.4 Do not reanalyze the MS or MSD samples, even if the surrogate recoveries are outside the limits.

8.13.2.5 If the sample associated with the MS and MSD analyses does not meet the surrogate recovery criteria, it should be reanalyzed only if the MS and MSD surrogate recoveries are within the limits. If the sample and spikes show the same pattern (i.e., outside the limits), then the sample does not need reanalysis. The similarity in surrogate recoveries in the sample and spike analyses must be discussed in the report narrative (See Section 11.1.1.1.9.).

8.13.3 If the surrogate recoveries of the reanalysis are within limits, then the problem was within the laboratory's control. Therefore, the analysis with the surrogate recoveries within limits shall be considered the initial analysis, and should be the one reported. Provide raw data for both the initial (failing) analysis and the reanlysis.

8.13.4 If the reanalysis does not solve the problem, then submit the data from both analyses. Distinguish between the original analysis and the reanalysis by adding the "RE" suffix to the EPA sample number in the reanalysis.

8.14 Matrix Spike and Matrix Spike Duplicate analysis.

8.14.1 In order to determine the matrix effect upon the analytical methodology, a MS and MS duplicate analysis must be performed according to the following scheme, whichever is most frequent:

One MS/MSD for each case of samples received.

One MS/MSD for each SDG of twenty samples within a case.

Matrix QC samples are usually designated in the field. In the event that a sample was not designated as the QC sample and adequate sample volume exists, the analyst will choose one <u>representative</u> sample from the SDG for QC analysis. Do not designate any obvious field blanks as the QC sample.

8.14.2 Analyze MS and MSD samples immediately following the analysis of the sample designated as the QC sample.

8.14.3 Analyze the MS and MSD according to Section 9 of this SOP.

8.14.4 The recovery and RPD criteria for MS and MS duplicate are found in Appendix C.

8.14.5 Calculate the recovery of each compound as follows:

$$\% \text{ Rec} = ((SSR - SR)/SA)*100$$

where,

SSR = Spiked sample result
SR = Sample result
SA = Spike added

8.14.6 Calculate the relative percent differences (RPD) of the recoveries of each compound in the MS and MS duplicate as follows:

$$RPD = \frac{MSR - MSDR}{(½)\,(MSR + MSDR)} \times (100)$$

where,

MSR = MS recovery
MSDR = MS duplicate recovery

8.14.7 The limits for MS and MS duplicate recovery are advisory limits only. If the limits are not met, then no further action is required since the purpose of these analyses is to determine matrix effects on compound recovery. A comment regarding the MS recoveries must be included in the report narrative. However, frequent failure to meet the recovery or RPD criteria should alert the analyst that a problem may exist, and must be investigated. The analyst should check the MS solution by spiking a method blank sample and checking the recoveries of the spike compounds. A new solution should be prepared if the recoveries are outside the limits.

8.15 Sample dilution.

8.15.1 If the on-column concentration of any target compound in any sample exceeds the initial calibration range, a new aliquot of that sample must be diluted and purged. The following criteria shall be used in performing dilutions.

8.15.1.1 Use the results of the original analysis to determine the approximate dilution factor required to get the largest analyte peak within the initial calibration range.

8.15.1.2 Choose a dilution factor to keep the response of the largest analyte peak for a target compound in the upper half of the initial calibration range of the instrument.

8.15.1.3 Do not dilute MS or MSD samples to get either the spiked or non- spiked target compounds within the initial calibration range. If the sample from which the spike aliquots were taken contains high levels of the spiked analytes, calculate the concentration and recovery of the analytes from the undiluted analysis, and note the problem in the report narrative.

8.15.1.4 In the case of extremely contaminated samples several dilutions may be required.

8.15.2 After a sample is analyzed that contains one or more target compounds at a level exceeding the initial calibration range of the system, it must be demonstrated that there is no carryover to subsequent analyses.

8.15.2.1 If analyzing one sample at a time, analyze an instrument blank immediately after the contaminated sample. If the Tekmar type autosampler was used, the instrument blank must be analyzed using the same sparge cell as the contaminated sample. The instrument blank must meet the acceptance criteria in Section 8.10.

8.15.2.2 If analyzing samples in automated run mode, monitor the sample analyzed immediately after the contaminated sample for all compounds that were in the contaminated sample that exceeded the limits above. The maximum contamination criteria are as follows: the sample must not contain a

concentration above the QL for the target compounds that exceeded the limits in the contaminated sample. The next sample analyzed using the same sparge cell that was used for the contaminated sample must be an instrument blank analyzed as specified in Section 8.10.1.

8.16 Review of Target Analytes

Each reported value must be reviewed for both qualitative and quantitative validity. This process, in particular the qualitative review of mass spectra, relies upon the technical judgement of the analyst.

8.16.1 Qualitative Review

In order for a target compound to be identified as present in a sample both the retention time and the mass spectra of the peak must match those of the standard.

8.16.1.1 The peak must elute within ±0.03 minutes of the retention time of the analyte in the continuing calibration standard. The retention time difference will be shown as Delta R.T. in each analyte's detailed profile quantitation report.

8.16.1.2 The mass spectra used for qualitative identification must be obtained using the GC/MS system used to analyze the samples.

8.16.1.2.1 All ions present in the standard mass spectra at a relative intensity of 10 percent of the most abundant ion must be present in the sample spectra.

8.16.1.2.2 The relative intensities of the ions must agree within ±20 % between the standard and sample spectra.

8.16.1.2.4 Ions present in the sample at greater than 10 percent abundance but not present in the standard spectra must be reviewed and accounted for by the analyst making the comparison.

8.16.1.3 If a compound cannot be verified by these criteria but, in the technical judgement of the analyst, is present the supporting evidence must be indicated on the raw data and the analyte reported.

8.16.2 Quantitative Review

Reported values must be reviewed to determine that the correct calculations were used to generate the results, that the average RRFs from the associated initial calibration were used, and that all other numbers are accurate.

8.16.2.1 Review of data system integrations

The analyst must review the data system integration to verify that the internal standards, surrogates and target compounds are integrated properly. All automated and manual integrations must comply with Region 9 Laboratory SOP 835, *Chromatographic Integration Procedures*.

8.16.2.2 Calculations

Results for target analytes are calculated using the following equation:

$$\text{Conc. (g/L)} = A_x * AMT_{IS} * DF / (A_{IS} * RRF)$$

where:

A_x	= area of the characteristic ion of the compound
AMT_{IS}	= amount of internal standard in g/L (5 g/L)
DF	= dilution factor
A_{IS}	= area of the characteristic ion of the associated internal standard
RRF	= analyte's average relative response factor from the initial calibration

8.17 Review the Tentatively Identified Compound search results for the following:

8.17.1 Verify that all unknown peaks in the RIC greater than 10 percent of the area of the nearest internal standard are accounted for in the summary.

8.17.2 Relative intensities of the major ions in the NIST reference spectrum (ions greater than 10 percent of the most abundant ion) should be present in the sample spectrum.

8.17.3 The relative intensities of the major ions should agree within 20 percent.

8.17.4 Molecular ions present in the reference spectrum should be present in the sample spectrum.

8.17.5 Review ions present in the sample spectrum but not in the reference spectrum for possible background contamination or the presence of co-eluting compounds.

8.17.6 Ions present in the reference spectrum but not within the scan range (35 to 300 amu) of the method should not be considered when making a tentative identification.

8.17.7 If, in the technical judgement of the analyst, no valid tentative identification of the compound can be made, the compound should be reported as "Unknown". Attempt to classify the unknown compound (i.e., unknown hydrocarbon, unknown aromatic, unknown chlorinated compound, etc.). The probable molecular weight should be included, if distinguishable.

8.18 If any of the data reports have been edited, or if manual integration or quantitation has been performed, the analyst shall identify them and show the chromatograms, quant reports and log book to a group leader, QA/QC Task Manager, or Program Manager for review and acceptance.

9 ANALYTICAL PROCEDURES

9.1 Analytical system preparation.

Perform mass calibration of the analytical system according to the schedule prescribed in Section 8.3. Mass calibration is done to ensure the accurate assignment of masses to ions generated in the ion volume of the mass spectrometer. Perfluorotributylamine (FC43) is used to perform the mass calibration of the instrument.

9.1.1 Open the HP 5973 MSD Instrument Control window and choose the Instrument menu. Select Perform MS Autotune.

9.1.2 The autotune software will adjust the mass ratio, abundance, peak shape, width, isotope peak resolution and mass assignment.

9.1.3 An autotune report will be generated and the parameters will be saved in ATUNE.U.

9.1.4 Select Manual Tune from View menu in Instrument Control view and manually tune the MSD, using ATUNE.U as reference. Adjust the parameters of Ion Focus, Entrance Lens, Repeller, Entrance Lens Offset, EM voltage etc to suit your analysis needs. Save the manual tune file in the format of month-date-year-sequential letter. For example: 082301A.U.

9.1.5 Check the mass spectrum/peak ratios with the specifications listed in Section 8.3. If the specifications are not met the instrument must be retuned and recalibrated.

9.2 Leak Checking

Check the mass spectrometer for leaks on a daily basis, prior to the analysis of 4-bromofluorobenzene (BFB) tuning compound.

9.2.1 Check that the MSD analyzer temperatures displayed as MS zones are set to the following values:

9.2.1.1 MS Quad @ 150°C.

9.2.1.2 MS Source@ 230°C.

9.2.1.3 If the display indicates that the analyzer temperatures are not at the desired set points, perform corrective action according to the operator's manual.

9.2.2 Check the source analyzer pressure.

9.2.2.1 The analyzer pressure should be less than 10^{-5} torr as indicated by the ion gauge controller.

9.2.2.2 Values higher than indicated above are indicative of large leaks and must be corrected.

9.2.3 Check the nitrogen (m/z 28) to water (m/z 18) ratio.

9.2.3.1 From View menu in Instrument Control panel of the HP 5973 MSD Instrument, select Perform Diagnostic/Vacuum and then run the Air / Water program from Diagnostics menu. The Air and Water Check report will be printed out. Alternatively, set the mass spectrometer to scan over a range of 10 to 50 m/z. Observe the ratio of the water peak (m/z 18) to the nitrogen peak (m/z 28). If a leak is present in the mass spectrometer the nitrogen peak will be greater than the water peak. Corrective action must be taken if a leak is detected.

9.3 GC/MS Performance Check

9.3.1 Prior to the analysis of any calibration standards, blanks, or samples (including MS/MSDs), the GC/MS system must meet the mass spectral ion abundance criteria for bromofluorobenzene (BFB) prescribed in Section 8.4. Proper tuning of the instrument is necessary to produce standardized fragmentation patterns of target and non-target compounds.

9.3.2 Setup the GC/MS system with the appropriate GC and mass spectrometer conditions. See Appendix E.

9.3.3 Set up a data acquisition for the direct injection of BFB. See Appendix F for data file naming convention.

9.3.4 Inject 0.5 μL of BFB Solution (50 ng/μL) into injection port and press the start button on the GC.

9.3.5 After the data acquisition is complete, execute the BFB evaluation procedure. The autofind procedure will automatically find the BFB peak, average three scans (the peak apex scan and the scans immediately preceding and following the apex), perform a background subtraction and print out a hard copy of the spectrum, the chromatogram, and the table of ion abundances.

9.3.6 The ion abundance ratios must meet the criteria listed in Section 8.4.

9.4 Analysis of samples

The 12-hour analytical time period for this method begins with the injection of BFB and ends 12 hours after the injection time. Standards, blanks, and samples must be analyzed within this 12-hour analytical time period.

9.4.1 Five-point initial calibration

Perform a five-point initial calibration to demonstrate that the GC/MS system provides a linear response over the desired concentration range. Set up the purge and trap concentrator for analysis using 25-mL sparge cells. The five concentration points are listed in the table 1 below.

Table 1 25-mL Calibration Standard Amounts

Calibration Point	Tekmar 2016 Autosampler		Varian Archon Autosampler	
	DWIS Mix 50 µg/mL	DW Calibration Mix 25 µg/mL	DWISA Mix 125 µg/mL	DW Calibration Mix 25 µg/mL
25 µg/L	2.5 µL	25 µL	1 µL	50 µL
10 µg/L	2.5 µL	10 µL	1 µL	20 µL
5 µg/L	2.5 µL	5 µL	1 µL	10 µL
2 µg/L	2.5 µL	2 µL	1 µL	4 µL
1 µg/L	2.5 µL	1 µL	1 µL	2 µL

9.4.1.1 Fill a 25-mL (For Tekmar ALS2016 Autosampler) or 50-mL (For Varian Archon Autosampler) syringe with method blank water. Invert the syringe, remove any air bubbles, and bring the level to 25 mL or 50 mL by displacement with the plunger.

9.4.1.2 Lay the 25 mL syringe on the lab bench and spike the water with 2.5 µL of DWIS Solution for Tekmar 2016 Autosampler. For Varian Archon autosampler, this step is omitted since 1 µL of DWISA Solution will be automatically spiked in the later step. The amount used results in the analytical equivalent of 5 µg/L.

9.4.1.3 Spike the water with the appropriate amount of DW mix solution for the specific point being analyzed

9.4.1.4 For Tekmar ALS2016 Autosampler, attach the 25 mL syringe to the luer lock mount on the autosampler. Open the mount valve and inject the contents of the syringe into the sparge cell and close the valve. Remove the syringe from the mount. Continue with Section 9.4.1.9.

9.4.1.5 For Varian Archon Autosampler, cap the end of the 50 mL syringe containing the DW mix solution. Rotate and invert the closed syringe to mix. Let the standard solution equilibrate in the syringe for about 1 minute. While the standard solution is equilibrating, label the 40-mL vial with information about the standard.

9.4.1.6 Gently decant the standard solution into the 40-mL vial, down the side of the vial, without any agitation. Overfill the vial to form an inverted meniscus. Cap the vial. Invert the vial to ensure that there are no air bubbles present.

9.4.1.7 Gently place the vial in the appropriate autosampler position. Avoid causing any hairline cracks in the vial, as this may result in the vial disintegrating in the autosampler.

9.4.1.8 The Archon autosampler will analyze a 25 mL aliquot and add 1 μL of the 125 ng/μL DWISA solution.

9.4.1.9 Analyze the standards. Press the start button on the concentrator to begin purging the standard. See Appendix D for purge and trap parameters.

9.4.1.10 Set up an acquisition on the GC/MS system with the appropriate GC/MS conditions. See Appendix E. Name the data files according to the data file naming convention in Appendix F.

9.4.1.11 Acquire the GC/MS data.

9.4.1.12 Analyze the four other initial calibration standards following the procedures outlined above.

9.4.1.13 Update the initial calibration response factors for the method by associating the current data file with each calibration level. Save the method.

9.4.1.14 Generate the initial calibration summary report. Samples must not be analyzed if the initial calibration does not meet the criteria specified in Appendix C.

9.4.1.15 If the initial calibration meets all the criteria specified in Section 8.5 of this SOP, the remainder of the 12-hour analytical period may be used for the analysis of QL standard (0.5 μg/L), LFB, blanks and samples, using the average response factor of the initial calibration to quantitate the blank and sample data files.

9.4.2 Continuing calibration.

Analyze a continuing calibration standard in every 12-hour analytical time period, after BFB tuning and prior to a method blank analysis. The continuing calibration check is performed in order to determine if the percent difference criteria meet the appropriate QC criteria specified in Section 8.6. The continuing calibration is analyzed at a level of 5 μg/L.

9.4.2.1 Prepare the mid-level standard as described for procedures in Sections 9.4.1 using the 5 μg/L calibration level in Table 1. The amounts used result in a final concentration of 5 μg/L.

9.4.2.2 Press the start button on the concentrator to begin purging the standard. See Appendix D for purge and trap parameters.

9.4.2.3 Set up an acquisition on the GC/MS system with the appropriate GC/MS conditions. See Appendix E. Name the data files according to the data file naming convention in Appendix F.

9.4.2.4 Analyze the standard and acquire the data.

9.4.2.5 Quantitate the data and print out a quantitation report and chromatogram. Quantitate the data using the average relative response factor from the initial calibration.

9.4.2.6 Examine the areas of the quantitation ions of the internal standard and surrogate compounds. These should not have decreased by more than 30% from the areas measured during the most recent previous continuing calibration or by more than 50% from the average of the areas measured during the initial calibration. If the areas have

decreased by more than these amounts, the necessary maintenance, source cleaning, and/or recalibration must be performed to restore system sensitivity. Generate a continuing calibration response report. Check that the relative response factor values meet the criteria specificed in Section 8.6 of this SOP.

9.4.2.7 If the continuing calibration response factors meet all of the criteria specified in Appendix C of this SOP, the remainder of the 12-hour analytical period may be used for the analysis of QL standard (0.5 µg/L), LCS, blanks and samples, using the average response factor of the initial calibration to quantitate the blank and sample data files.

9.4.3 Quantitation Limit Standard

Analyze a QL standard at a concentration of 0.5 µg/L to verify that the low detection limits for vinyl chloride, 1,2-dichloroethane, carbon tetrachloride, cis-1,3-dichloropropene, and trans-1,3-dichloropropene can be achieved. Prepare and analyze the QL standard in a manner analogous to the continuing calibration standard except use 0.5 µL of the DW calibration mix solution for Tekmar ALS 2016 Autosampler and 1 µL of the DW calibration mix solution for Varian Archon Autosampler.

9.4.3.1 Prepare the quantitation limit standard as described in Sections 9.4.1 using 0.5 µL of the DW calibration mix and 1 µL of the DW calibration mix for different Autosamplers as stated above. The amounts used result in a final concentration of 0.5 µg/L.

9.4.3.3 Press the start button on the concentrator to begin purging the standard. See Appendix D for purge and trap parameters.

9.4.3.4 Setup the GC/MS system with the appropriate GC and mass spectrometer conditions. See Appendix E. Name the data files according to the data file naming convention in Appendix F.

9.4.3.5 Analyze the standard and acquire the data.

9.4.3.6 Quantitate the data and print out a quantitation report and chromatogram. Use the average relative response factor from the initial calibration for quantitation.

9.4.3.7 Evaluate the calculated concentrations against the criteria listed in Section 8.7. Do not analyze samples if the QL standard does not meet the criteria specified in Section 8.7.

9.4.3.8 If the QL standard meets all the criteria specified in Section 8.7, the remainder of the 12-hour analytical period may be used for the analysis of blanks and samples.

9.4.4 Laboratory Control Sample (LCS)

Analyze an LCS once in every 12-hour analytical time period, immediately after the initial or continuing calibration. An LCS is analyzed to demonstrate that the calibration standards used to calibrate the instrument are appropriate. Specifically the LCS verifies that the standards include the appropriate compounds at the correct concentration. This is done by preparing the LCS spiking mixture from a source (or sources) entirely separate from those used to calibrate the instrument. The LCS is analyzed at a level of 5 μg/L.

9.4.4.1 Prepare the LCS as described in Sections 9.4.2 for the mid-point (5 μg/L) continuing calibration level, but using the LCS standard (DWLF at 25 μg/mL) rather than the DW calibration standard. The amounts used result in a final concentration of 5 μg/L.

9.4.4.2 Press the start button on the concentrator to begin purging the standard. See Appendix D for purge and trap parameters.

9.4.4.3 Setup the GC/MS system with the appropriate GC and mass spectrometer conditions. See Appendix E. Name the data files according to the data file naming convention in Appendix F.

9.4.4.4 Analyze the standard and acquire the data.

9.4.4.5 Quantitate the data and print out a quantitation report and chromatogram. Use the average relative response factor from the initial calibration for quantitation.

9.4.4.6 Evaluate the calculated concentrations against the criteria listed in Section 8.8. Do not analyze samples if the LCS does not meet the criteria specified in Appendix C.

9.4.4.7 If the LCS meets all the criteria specified in Appendix C, the remainder of the 12-hour analytical period may be used for the analysis of blanks and samples.

9.4.5 Laboratory Reagent Blank analysis. (Method Blank)

Analyze a method blank after the initial or continuing calibration is performed and before samples are analyzed.

9.4.5.1 Prepare the method blank as described in Sections 9.4.1.1 to 9.4.1.7 except do not add DW calibration mix.

9.4.5.2 Press the start button on the concentrator to begin purging the standard. See Appendix D for purge and trap parameters.

9.4.5.3 Setup the GC/MS system with the appropriate GC and mass spectrometer conditions. See Appendix E. Name the data files according to the data file naming convention in Appendix F.

9.4.5.4 Analyze the standard and acquire the data.

9.4.5.5 Quantitate the data and print out a quantitation report and chromatogram. Use the average relative response factor from the initial calibration for quantitation.

9.4.5.6 Evaluate the calculated concentrations against the criteria listed in Section 8.8. Do not analyze samples if the method blank does not meet these criteria. If the method blank meets all the criteria, the remainder of the 12-hour analytical period may be used for the analysis of blanks and samples.

9.4.6 Sample analysis.

Analyze samples only after the BFB tune, initial calibration, continuing calibration, LCS, QL standard, and method blank analysis meet all of the appropriate criteria specified in the QA/QC section of this SOP.

9.4.6.1 Allow the sample to reach ambient temperature before analysis.

9.4.6.2 Check that the numbers on the vials coincide with the numbers on the routing forms to ensure that the correct sample is being analyzed.

9.4.6.3 Break the chain of custody seal on the vial with a scalpel or other appropriate implement, again making note if the seal is missing or compromised in any way.

9.4.6.4 Take note if the sample has an unusual color or other physical characteristic such as more than one phase, presence of a precipitate or unusual viscosity. If any physical signs of contamination are present a screening analysis to protect the analytical system from damage or contamination, and to determine the appropriate subsequent dilution is required. If an initial screening is necessary dilute the sample 1:50, unless the group leader, program manager, or EPA Chemistry TOPO decides otherwise.

9.4.6.5 Note in the runlog if there is head space present in the sealed sample vial.

9.4.6.6 For the Tekmar ALS 2016 Autosampler system, fill a 25-mL syringe with the sample. Invert the syringe, remove any air bubbles, and bring the level to 25-mL by displacement with the plunger. Any excess sample displaced from the syringe should be either place back into the sample vial or placed in the aqueous waste containers.

Spike the water with 2.5 μL of DWIS solution. The amounts used result in a final concentrations of 5 μg/L.

Attach the syringe to the Luer-lock mount on the appropriate autosampler position sparge apparatus. Open the mount valve and inject the contents of the syringe into the sparge cell and close the valve. Remove the syringe from the mount.

9.4.6.7 For the Varian Archon Autosampler systems, gently place the vial in the appropriate autosampler position. The autosampler will analyze a 25 mL aliquot and add 1 μL of the IS solution.

9.4.6.8 Press the start button on the concentrator to begin purging the sample. See Appendix D for purge and trap parameters.

9.4.6.9 Set up the GC/MS system with the appropriate GC and MS conditions. See Appendix E. Include the EPA sample number and the laboratory sample number, as well as the dilution level, if any in the sample description. Name the data files according to the data file naming convention in Appendix F.

9.4.6.10 Check the pH of the sample using pH 0-14 range pH paper. Record the pH in the injection logbook. If any samples have a pH greater than 2, note the samples in the report narrative.

9.4.6.11 Quantitate the data and print out a quantitation report and chromatogram. Use the average relative response factor from the initial calibration for quantitation.

9.4.6.12 Review the results as discussed in Section 8.16 for qualitative identification of target analytes. Cross out all reported hits which do not meet the qualitative criteria. Review all target compounds that are detected to verify they are integrated properly. Review the chromatogram for possible false negatives.

9.4.6.13 Check the sample's surrogate and internal standard recoveries with the criteria in Sections 8.11 and 8.12 in this SOP.

9.4.6.14 If any manual integrations are performed to integrations performed by the software, they must be performed in accordance with USEPA Region 9 Laboratory SOP#835, *Chromatographic Integration Procedures.*

9.4.6.16 In addition to undiluted analysis, the sample must be diluted and reanalyzed if any of the target analytes exceed the calibration range of the instrument. The sample should be diluted so that the target compound(s) which was originally outside of the calibration range will fall within the initial calibration range of the instrument.

9.4.6.17 If dilutions are performed due to compound(s) being over calibration range, refer to Section 8.10 to ensure no carryover has occurred.

9.4.7 Analysis of matrix spike (MS) and matrix spike duplicate (MSD) samples.

9.4.7.1 Analyze matrix spike and matrix spike duplicate analyses according to the schedule prescribed in Section 8.13 of this SOP.

9.4.7.2 For the Tekmar ALS 2016 Autosampler system, analyze matrix spike and matrix spike duplicate samples according to the instructions for sample analysis (Section 9.4.6), except spike the sample with 2.5 uL of 50 μg/mL Matrix Spike Solution, after spiking the sample with the IS/SMC Solution.

9.4.7.3 For the Varian Archon Autosampler systems, analyze MS/MSD samples according to the instructions for sample analysis (Section 9.4.6), except spike the sample with 4 μL of the 50 ng/μL MS solution. Using a microliter syringe, inject the MS solution directly into the sample, through the Teflon-lined septum of the 40-mL screw cap vial. Assuming the vial contains 40 mL of sample, the final spike concentration is 5 μg/L.

Since spiking of each vial for MS/MSD analysis occurs, the MS/MSD analysis will proceed only if a sufficient number of sample vials have been submitted to the laboratory.

9.4.7.4 Press the start button on the concentrator to begin purging the samples. See Appendix D for purge and trap parameters.

9.4.7.5 Setup the GC/MS system with the appropriate GC and mass spectrometer conditions. See Appendix E. Name the data files according to the data file naming convention in Appendix F.

9.4.7.6 Analyze the sample and acquire the data.

9.4.5.5 Quantitate the data and print out a quantitation report and chromatogram. Use the average relative response factor from the initial calibration for quantitation.

9.4.5.6 Evaluate the calculated concentrations against the criteria listed in Section 8.13.

9.4.8 Analysis of storage blanks.

9.4.8.1 A storage blank analysis must be performed according to the schedule specified in Section 8.9 of this SOP.

9.4.8.2 Analyze storage blank samples according to the instructions for laboratory reagent blank analysis in Section 9.4.5 of this SOP; except that the storage blanks shall be analyzed, rather than laboratory reagent water. Compare the storage blank results to the criteria listed in Section 8.9 of this SOP.

9.5.1 Tekmar ALS 2016 Autosampler operation.

The Tekmar ALS2016 Autosampler along with LSC2000 Concentrator may be employed in any of the methods described in Sections 9.4.1 through 9.4.8. The operating parameters of the autosamplers are found in Appendix D at the end of this SOP.

9.5.1.1 Outfit the autosampler with the 25-mL fritted sparge cells.

9.5.1.2 Prepare and deliver each standard, blank, or sample into a separate sparge cell according to the instructions set forth in the analysis sections of this SOP.

9.5.1.3 Display the ALS function on the purge and trap concentrator and select the purge positions which are to be used in the autosampler sequence (total possible are 1 through 16).

9.5.1.4 Position the concentrator to the first cell to be used in the sequence.

9.5.1.5 The analytical sequence file must be created using the data acquisition software. Complete the header information for each sample and save the file. Load and run the sequence.

9.5.1.6 Press the start button on the concentrator to start the sequence.

9.5.1.7 The concentrator will automatically start the GC/MSD analytical run. The acquisition sequence must be entered in the GC software for this to occur. Each data file will be automatically quantitated. The files should be processed in accordance with the instructions found in the sample analysis section relevant to the type of analysis being conducted.

9.5.2 Varian Archon autosampler operation

The Varian Archon autosamplers may be employed in any of the methods described in Sections 9.4.1 through 9.4.8. The operating parameters of the autosamplers are found in Appendix D at the end of this SOP.

9.5.2.1 Prepare the standard, blank or sample as described in Sections 9.4.1 to 9.4.8.

9.5.2.2 Place the vials in the autosampler tray.

9.5.2.3 Establish a method on the keypad on the autosampler. The method will establish the volume of sample to use, dilutions, addition of internal standard, and which vials to analyze.

9.5.2.4 Once the method has been established, begin the method by pressing the autostart method on the keypad.

9.5.2.5 The concentrator will automatically start the GC/MSD analytical run. The acquisition sequence must be entered in the GC software for this to occur. Each data file will be automatically quantitated. The files should be processed in accordance with the instructions found in the sample analysis section relevant to the type of analysis being conducted.

10 DOCUMENTATION

10.1 Data from the Region 9 Laboratory is presented to the client in one of two general reporting formats: a complete, validatable data package or a summary report. For the former the laboratory prepares calibration and quality control summary forms and a summary of analytical results spreadsheet and provides this information along with the raw data, a report narrative, and an analytical report spreadsheet to the client. If a summary report is all that is required the laboratory prepares a report narrative and the summary of analytical results spreadsheet for delivery to the client and collects the raw data which will be filed at the laboratory. Section 10.2 details the requirements of a complete data package and Section 10.3 lists the summary report requirements.

10.2 Complete Data package assembly.

Assemble a discrete data package for each SDG in each case requiring the delivery of a data package for validation according to the following instructions, and in the following order. Each section of the data package shall have a cover sheet titled with the appropriate section name. The data package is sequentially numbered using a hand operated numerator.

10.2.1 Report Narrative section.

10.2.1.1 The Report Narrative is a text narrative in WordPerfect 8 format describing, but not limited to, the following.

10.2.1.1.1 Site name.

10.2.1.1.2 Case number.

10.2.1.1.3 SDG number.

10.2.1.1.4 Date(s) the samples were received.

10.2.1.1.5 EPA sample number.

10.2.1.1.6 Region 9 Laboratory sample number.

10.2.1.1.8 Summary of the analyses performed.

10.2.1.1.9 Description of data qualifiers used in results spreadsheet.

10.2.1.1.10 Problems with the analyses.

10.2.1.1.11 Summary of the QA/QC results.

10.2.1.1.12 Glossary

10.2.1.1.13 Analytical comments including example calculations for an analyte and a surrogate.

10.2.2 Summary of Analytical Results spreadsheet

10.2.2.1 Include a spreadsheet (Lotus 123, Version 5) containing a summary of the results for all target analytes for all samples and blanks in the data package.

10.2.2.2 The header information for each sample contains the station location, client sample ID, Region 9 Laboratory sample ID, date of sample collection, and reporting units (usually g/L).

10.2.2.3 The results section contains the results for each target analyte as follows:

If an analyte is not detected then report the quantitation limit and enter a "U" in the column to the right.

If an analyte is detected then report the value reported on the quantitation report. Enter any associated qualifier in the "Q" column, and a letter identifying a comment, if applicable, in the "Com" column. Define the letter in the Report Narrative.

If an analyte requires a dilution then report the value from the sample dilution.

10.2.3 Tracking Forms section.

The Tracking Form section contains the following forms.

10.2.3.1 A copy of the applicable technical direction form (TDF).

10.2.3.2 A copy of the chain of custody record received with each sample shipment.

10.2.3.3 A copy of the shipper's airbill, or bill of lading.

10.2.4 QA/QC Summary section.

The QA/QC section contains all of the QA/QC summary forms for the specific sample delivery group. Forms are generated using EnviroQuant software. All of the forms are checked by the analyst to ensure that all of the filenames are

correct, and that all of the appropriate standards, blanks, samples, spikes, and tune files have been included.

10.2.4.1 Surrogate and internal standard compound recovery data summary.

10.2.4.2 MS and MS duplicate recovery data summary.

10.2.4.3 Detailed quantitation and library search compound (LSC) report for applicable storage blanks.

10.2.5 Initial Calibration section

10.2.5.1 Copy of peer reviewed instrument run log page(s)

10.2.5.2 DFTPP tuning report including pass/fail table, bar spectrum and tabulated mass listing.

10.2.5.3 Initial calibration summary form containing response factors for each file, the average response factor and %RSD for each compound in the initial calibration.

10.2.5.4 Quantitation reports and reconstructed ion chromatograms (RIC).

10.2.5.5 Documentation of any manual integrations as described in Section 8.5.11 and USEPA Region 9 Laboratory SOP #835, *Chromatographic Integration Procedures.*

10.2.6 Sample section(s).

The sample section(s) contain data for each sample in the sample delivery group analyzed during a 12-hour analytical period, organized in chronological order, with associated QC data. Make a separate sample section for samples analyzed during different 12-hour analytical periods. Each daily sample section contains:

10.2.6.1 QC standard information consisting of the following:

10.2.6.1.1 Copy of peer reviewed run log page.

10.2.6.1.2 BFB tune data; including the background subtracted spectra, the mass listing, and the RIC labeled so as to indicate the BFB peak.

10.2.6.1.3 Continuing calibration file, including the RIC, quantitation report, and the continuing calibration report file. (This can be generated using the "evaluate data file as continuing calibration" command in the software.)

10.2.6.1.4 LCS data file, including the RIC and the quantitation report.

10.2.6.1.5 QL data file, including the RIC and the quantitation report.

10.2.6.1.6 Method blank, including the RIC and the detailed quantitation report, as well as detailed LSC report.

10.6.2 Sample data arranged chronologically. Data for all analyses must be included, even data not used.

10.2.6.2.1 The raw data quantitation report of the data file. Enter appropriate qualifiers on this report:

B This analyte was detected in an associated blank.

E The amount detected exceeds the linear calibration range.

10.2.6.2.2 The reconstructed ion chromatogram (RIC) of the data file.

10.2.6.2.3 The raw spectra and enhanced spectra of the target compounds detected in the sample, as well as the enhanced spectra of the corresponding target compound in the calibration file, in order of elution.

10.2.6.2.4 Selected ion chromatograms of any manual integrations performed. The ion chromatograms showing integration before and after the manual integration shall

be included. See SOP 835 for manual integration procedures.

10.2.6.2.5 TIC report, non-target compound report form detailing the compound names, retention times, the estimated concentrations, and the CAS number of up to twenty tentatively identified compounds.

10.2.6.2.6 Enhanced spectra of non-target compounds detected in the sample. Library search listing the three best fits of a forward library search of the non-target compounds.

10.2.7 Logbooks and Miscellaneous Data.

10.2.7.1 Copies of all applicable standards preparation logbook pages.

10.3 Summary Report and Raw Data

When the client requirements stipulate a summary report the laboratory prepares the case narrative, analytical results spreadsheet, and organizes the raw data associated with each SDG for filing in the event that future data review or validation is required. The summary report is prepared in a manner identical to the full data package with the following exceptions:

1.) The raw data is not paginated
2.) Copies of the standards logs are not included

10.4 Notification of exceedance of MCL

If samples are for drinking water compliance, examine the quantitated results, corrected for any dilution. If the results exceed the MCL for any regulated compound (see Appendix B), report the exceedance in accordance with EPA Region 9 Laboratory SOP 830.

10.5 Peer review

Assign the data package an ESAT document control number after assembly. The completed data package is reviewed by a chemist, other than the chemist who performed the analyses or assembled the data package. All reviews are documented using a document review form.

10.6 Technical review.

The GC/MS Group Leader or a senior level chemist, other than the chemist who performed the analyses reviewed the data package. Following the technical review, a final review is be performed by the group leader, QA/QC task manager, program manager or their designee. Once the final review is completed, a cover letter is prepared and signed by the group leader and the entire data package is paginated and turned in to the TOPO.

10.7 Injection logbook.

Maintain a logbook for each instrument in accordance with the instructions in EPA Region 9 Laboratory SOP #840 *Notebook documentation and control.*

10.8 Refrigerator temperature log.

Maintain a refrigerator temperature log for each refrigerator or freezer according to EPA Region 9 Laboratory SOP #805, *Refrigerator Temperature Monitoring*. Record the temperatures on a daily basis whenever the refrigerator is in use.

11 REFERENCES

11.1 USEPA Region 9 Laboratory SOP 110, *Sample Receiving and Login*

11.2 USEPA Region 9 Laboratory SOP 125. *Sample Disposal*

11.3 USEPA Region 9 Laboratory SOP 205. *Preparation of Organic Free Method Blank Water.*

11.4 USEPA Region 9 Laboratory SOP 255. *Standard Preparation for Volatile Organics Laboratory.*

11.5 USEPA Region 9 Laboratory SOP 805, *Refrigerator Temperature Monitoring.*

11.6 USEPA Region 9 Laboratory SOP 830, *Notification Procedure for Results Exceeding the Safe Drinking Water Act Maximum Contaminant Level.*

11.7 USEPA Region 9 Laboratory SOP 835, *Chromatographic Integration Procedures.*

11.8 USEPA Region 9 Laboratory SOP 840, *Notebook Documentation and Control.*

11.9 USEPA Region 9 Laboratory SOP #880, *Initial and Continuing Demonstration of Capabilities and Performance*

11.10 Tekmar LSC2000 and ALS2016 Operator's Manuals.

11.11 Varian Archon Autosampler and HP 3000 Concentrator Operator's Manuals.

11.12 EPA Method 524.2 Measurement of Purgeable Organic Compounds in Water by Capillary Column Gas Chromatography/Mass Spectrometry; Revision 4.1, 1995.

Appendix A

SOP Deviations from Reference Method, EPA Method 524.2, Rev. 4.1

1. Final analytical standards are prepared directly into 25 mL or 50 mL of organic-free water in a syringe rather than into volumetric flasks. Because the entire volume of standard is used, this avoids losses of analytes during mixing and standard transfer.

2. The Region 9 Laboratory routinely examines data for the presence of non-target compounds (Tentatively Identified Compounds or TICs).

3. Method 524.2 recommends using Fluorobenzene as the internal standard and 4-Bromofluorobenzene and 1,2-Dichlorobenzene-d4 as the surrogate compounds. The Region 9 Laboratory uses Dichloromethane-d2, Fluorobenzene, and Chlorobenzene-d5 as the internal standards, and 1,2-Dichloromethane-d4, Toluene-d8, 4-Bromofluorobenzene, and 1,2-Dichlorobenzene-d4 as the surrogate compounds.

4. Method 524.2 recommends using m/z ion 95 as the quantitation ion for 4-Bromofluorobenzene, and m/z ion 91 for the three xylenes. The Region 9 Laboratory uses m/z ion 174 for quantitation of 4-Bromofluorobenzene, and m/z 106 for the quantitation of the xylenes.

5. Method 524.2 does not require analysis of a laboratory fortified matrix (matrix spike). The Region 9 Lab performs MS/MS duplicate analysis with every sample delivery group (SDG) of 20 samples.

6. The calibration range for 1,2-dibromo-3-chloropropane is 2 to 25 μg/L. There are no %RSD requirements for this compound.

Appendix B

Analyte List

The following is the Target Compound list for volatile organics, as well as the associated internal standard and surrogate compounds, for analysis by EPA Drinking Water method 524.2. Included are the quantitation limits and the internal standard reference for each target compound, as well as the quantitation mass for each analyte.

Internal Standards

Compound Name	ISTD #	Quant m/z
Dichloromethane-d2	1	53
Fluorobenzene	2	96
Chlorobenzene-d5	3	117

Surrogate Compounds

Compound Name	ISTD REF	Quant m/z
1,2-Dichloroethane-d4	2	65
Toluene-d8	3	98
4-Bromofluorobenzene	3	174
1,2-Dichlorobenzene-d4	3	152

Target Compounds

Compound Name	QL (µg/L)	MCL (µg/L)	ISTD REF	Quant m/z	R	MDL (µg/L)
Dichlorodifluoromethane	1	—	1	85		
Chloromethane	1	—	1	50		
Vinyl chloride	0.5	2	1	62	#	0.4
Bromomethane	1	—	1	94		
Chloroethane	1	—	1	64		
Trichlorofluoromethane	1	—	1	101		
1,1-Dichloroethene	1	7	1	96	#	0.5
Methylene chloride	1	5	1	84	#	0.5
trans-1,2-Dichloroethene	1	100	1	96	#	0.5
1,1-Dichloroethane	1	—	1	63		
Methyl t-butyl ether (MTBE)	1	—	1	73		
2,2-Dichloropropane	1	—	1	77		
cis-1,2-Dichloroethene	1	70	1	96	#	0.5
Chloroform	1	100*	1	83	#	
Bromochloromethane	1	—	1	128		
1,1,1-Trichloroethane	1	200	2	97	#	0.5
1,1-Dichloropropene	1	—	2	75		
Carbon tetrachloride	0.5	5	2	117	#	0.5

Benzene	1	5	2	78	#	0.5
1,2-Dichloroethane	0.5	5	2	62	#	0.5
Trichloroethene	1	5	2	95	#	0.5
1,2-Dichloropropane	1	5	2	63	#	0.5
Bromodichloromethane	1	100*	2	83	#	
Dibromomethane	1	—	2	93		

Compound Name	QL (µg/L)	MCL (µg/L)	ISTD REF	Quant m/z	R	MDL (µg/L)
cis-1,3-Dichloropropene	0.5	—	2	75		
Toluene	1	1,000	3	92	#	0.5
trans-1,3-Dichloropropene	0.5	—	2	75		
1,1,2-Trichloroethane	1	5	2	83	#	0.5
Tetrachloroethene	1	5	3	166	#	0.5
1,3-Dichloropropane	1	—	3	76		
Dibromochloromethane	1	100*	3	129	#	
Dibromoethane	1	—	3	107		
Chlorobenzene	1	100	3	112	#	0.5
1,1,1,2-Tetrachloroethane	1	—	3	131		
Ethylbenzene	1	700	3	91	#	0.5
m & p-Xylene	1	10,000**	3	91	#	0.5
o-Xylene	1	10,000**	3	91	#	0.5
Styrene	1	100	3	104	#	0.5
Bromoform	1	100*	3	173	#	
Isopropylbenzene	1	—	3	105		
1,1,2,2-Tetrachloroethane	1	—	3	83		
Bromobenzene	1	—	3	156		
1,2,3-Trichloropropane	1	—	3	75		
n-Propylbenzene	1	—	3	91		
2-Chlorotoluene	1	—	3	91		
1,3,5-Trimethylbenzene	1	—	3	105		
4-Chlorotoluene	1	—	3	91		
tert-Butylbenzene	1	—	3	119		
1,2,4-Trimethylbenzene	1	—	3	105		
sec-Butylbenzene	1	—	3	105		
p-Isopropyltoluene	1	—	3	119		
1,3-Dichlorobenzene	1	—	3	146		
1,4-Dichlorobenzene	1	75	3	146	#	0.5
n-Butylbenzene	1	—	3	91		
1,2-Dichlorobenzene	1	600	3	146	#	0.5
1,2-Dibromo-3-chloropropane	2	—	3	75		

1,2,4-Trichlorobenzene	1	70	3	180	#	0.5
Hexachlorobutadiene	1	—	3	225		
Naphthalene	1	—	3	128		
1,2,3-Trichlorobenzene	1	—	3	180		

MCL = Maximum contaminant level from SDWA.
R- # = Regulated Compound
MDL=Regulated compound maximum MDL
*= MCL for total trihalomethanes is 100 μg/L
**= MCL for total xylenes is 10,000 μg/L

Appendix C

Calibration Levels and Quality Control Criteria

Calibration Standards for Incos 50 A/Incos XL			Calibration Standards for Archon Autosamplers		
Calibration Point	DWIS Mix 50 µg/mL	DW Calibration Mix 25 µg/mL	Calibration Point	DWIS Mix 125 µg/mL	DW Calibration Mix 25 µg/mL
25 µg/L	2.5 µL	25 µL	25 µg/L	1 µL	50 µL
10 µg/L	2.5 µL	10 µL	10 µg/L	1 µL	20 µL
5 µg/L	2.5 µL	5 µL	5 µg/L	1 µL	10 µL
2 µg/L	2.5 µL	2 µL	2 µg/L	1 µL	4 µL
1 µg/L	2.5 µL	1 µL	1 µg/L	1 µL	2 µL

Quality Control Criteria

Initial demonstration accuracy must be greater than or equal to 80% and less than or equal to 120 % recovery. Initial demonstration precision must result in a RSD of less or equal to 20% The MDL achieved must meet that specified for the regulated compounds, and be less than the Quantitation Limit (QL) for the unregulated compounds.

Initial Calibration RSD must be less than or equal to 20% for all regulated analytes. The %RSD of the non-regulated analytes must be less than or equal to 30%. 1,2-dibromo-3-chloropropane has no %RSD requirement as the recommended method for analysis of this compound is 504.1

The internal standard areas of the continuing calibration standard must be ±50% of the average of the internal standard areas of the initial calibration.

Continuing Calibration %D must be less than or equal to ± 30% of the initial calibration average response factor for all regulated analytes. Up to ten percent of analytes in any one continuing calibration curve may be greater than the 30% D value, provided those analytes are not regulated, and the %D is 40.

LCS recoveries must be greater than or equal to 70% and less than or equal to 130% for all regulated analytes. For all non-regulated analytes, the recoveries must be greater than or equal to 60% and less than or equal to 140%. Past experience at the Region 9 Laboratory demonstrates that dichlorodifluoromethane exhibits poor recovery values for the LCS, and thus is exempt from this criteria.

Laboratory Fortified Matrix recoveries should be greater than or equal to 70% and less than or equal to 130%. The RPD between the MS and MSD should be less than or equal to 20%.
Surrogate (system monitoring compounds) recoveries should be greater than or equal to 70% and less than or equal to 130%.

Appendix D

PURGE & TRAP CONCENTRATOR/AUTOSAMPLER PARAMETERS

Purge and Trap Concentrator operating parameters

The operating parameters for the purge & trap concentrators. These parameters may vary slightly to optimize instrument responses.

PARAMETER	SETTING	
	Tekmar LSC2000	HP (Tekmar) 3000
Standby temperature	38 C	38 C
Preheat temperature	N/A	N/A
Prepurge time	N/A	N/A
Sample temperature	Ambient	Ambient
Purge Time	11 minutes	11 minutes
Dry purge	3 minute	1 minute
Purge Flow	35 - 40 mL/min	35-40 mL/min
Desorb preheat temperature	245 C	240 C
Desorb	6.00 minutes @ 250 C	4.00 minutes @ 250 C
Bake	4 minutes @ 260 C	6 minutes @ 260 C
Auto drain	On	Off (controlled by Archon)
Bake gas bypass	Off	Off
Valve temperature	120 C	120 C
Mount temperature	40 C	40 C
Line temperature	120 C	120 C

Tekmar ALS2016 Autosampler

The operating method for the ALS2016 autosampler which is interfaced with the Tekmar LSC2000 and an Agilent 6890GC/Agilent 5973 MSD Network is as follows.

PARAMETER	SETTING
Valve temperature	120 C
Line temperature	120 C
Sample temperature	Ambient
Auto drain	On

Varian Archon Autosampler

The Archon delivers an aliquot of the water sample directly from the 40 mL sample vial into the sparge vessel on the concentrator. The Archon can be programmed to add the internal standard and surrogate into the sample during the transfer process. In water analysis mode, the settings for the Archon method are equivalent to the settings on the concentrator. The following parameters must be established on the Archon: sample volume, dilution, standard addition, purge time (same as concentrator), and number of vials to be analyzed.

Appendix E

GC/MSD PARAMETERS

HP/Agilent 6890 GC & HP/Agilent 5973MSD

The operating parameters for this system are listed below. Actual operating conditions may vary slightly to optimize instrument

BFB analysis

PARAMETER	SETTING
Injector temperature	220 C
Column Stability time	0.5 minutes
MS Quad	150 C
MS Source	230 C
Initial Oven Temp	110 C
Initial Oven Time	0.5 minutes
Temperature Ramp	25 C/minute for 3.6 minutes
Final Oven Temp	190 C
Final Hold Time	1.9 minutes
Inlet mode:	Splitless for 0.1 min
Split vent flow:	20 mL/min
Column Flow rate	0.8/*1.2 mL/min at constant flow mode
Electron Energy	70 volts (nominal)
MS Scan range	35-300 amu

* for Restek RTX-VMS 30m x 0.25mm, 1.4 micro film column

VOA analysis

PARAMETER	SETTING
Injector temperature	200 C
Column Stability time	0.5 minutes
MS Quad	150 C
MS Source	230 C
Initial Oven Temp	35 C
Initial Oven Time	3.0 minutes
Temperature Ramp	8 C/minute to 115 C for 12 minutes; 20 C/minute to 200 C for 4.25 minutes *10 C/minute to 120 C for 10.5 minutes; *30 C/minute to 200 C for 2.67 minutes
Final Oven Temp	200 C
Final Hold Time	2.0/* 5.0 minutes
Inlet mode:	Split
Split ratio:	20
Column Flow rate	0.8/* 1.2 mL/min at constant flow mode.
Electron Energy	70 volts (nominal)
MS Scan Range	35-300 amu

* for Restek RTX-VMS 30m x 0.25mm, 1.4 micro film column

Appendix F

Data File Naming Convention

Sub directory naming convention
A subdirectory must be made daily where the data for that day will be stored.

MMDDYY

25 mL waters analyzed on HP5973K on 08/12/01

X:\HPCHEM\1\data\081201DW where x: is the drive.

Instrument Identifiers

Instrument ID	HP5973H	HP5973J	HP5973K
File Identifier	H	J	K

All matrix identifiers will be W, for waters.

BFB
(No Matrix Identifier Required)

BF?MMDD?
The first BFB analyzed on HP5973H on 03/05/01 = BFH0305
The second BFB analyzed onHP5973H on 03/05/01 = BFH0305A

Initial Calibrations
I??MMDD?
25 mL water initial calibration analyzed on HP5973J on 01/10/01

Concentration	Calibration ID	Filename
25 µg/L	VSTD025	IWJ0110A
10 µg/L	VSTD010	IWJ0110B
5 µg/L	VSTD005	IWJ0110C
2 µg/L	VSTD002	IWJ0110D
1 µg/L	VSTD001	IWJ0110E

In the event that a CCAL that fails a previous ICAL is used as part of a new ICAL the CCAL final naming convention below is used for that CCAL

Continuing Calibrations

C??MMDD?
First 25 mL water continuing calibration analyzed on HP5973K on 04/21/01

CWK0421

Laboratory Fortified Blank (LCS)
LW?MMDD?

First LCS of the day =void
Second LCS of the day = A.....

Instrument	File ID
HP5973J	LWJ0101
HP5973H	LWH0530A

QL Standard

QW?MMDD?
First QL standard analyzed on HP5973H on 01/12/01

QWH0112

Method Blank (Laboratory Reagent Blanks) (LRB)

MW?MMDD?

First blank of the day = void
Second blank of the day = A.....

Instrument	File ID/Blank ID
HP5973H	MWH0530
HP5973J	MWJ0401A

Storage Blanks

LAB ID = VHBLKm1m1d1d1 - SBXm2m2d2d2
where m1m1d1d1 is the day the storage blank was placed in the sample refrigerator and m2m2d2d2 is the day the storage was analyzed. X= instrument Identifier

Instrument	File ID	LAB ID
HP5973K	VHBLK0610	SBK0617
HP5973J	VHBLK0321	SBJ0328

Samples including MS/MSD, Instrument Blanks, etc...

YY?####

YY = Federal Fiscal year (Begins October 1st)
? = Instrument Identifier
= sequential number (first sample analysis in the fiscal year = 0001)

The 100th sample analysis on HP5973J

01J0100

Appendix A-2
1,4-Dioxane

Amendment to Region 9 SOP #315

The Region 9 SOP # 315 "*SEMIVOLATILE ORGANICS ANALYSIS*" is amended to allow for the addition of 1,4-dioxane as an analyte as follow:

Initial Calibration:

The SVOC initial calibration mix was modified to include 1,4-dioxane as follow:

Level	1	2	3	4	5
SVOC IS (ng/μL)	20	20	20	20	20
SVOC Targets (ng/μL)	10	25	40	60	80
1,4-dioxane-d8 (ng/μL)	5	5	5	5	5
1,4-dioxane (ng/μL)	1	2	5	10	20

Initial results indicate that 1,4-dioxane response is linear over the above calibration range; thus, it would be reasonable to assign the normal SVOC %RSD limit of ± 20%.

1,4-Dioxane-d8 is utilized as an internal standard and as a surrogate as follow:

> 1,4-dioxane-d8 (internal standard): 1,4-dioxane-d8 is treated as a normal SVOC standard with the exception that it is spiked at the 5 ng/μL. Native 1,4-dioxane concentration is calculated based on 1,4-dioxane-d8.
>
> 1,4-Dioxane-d8 (surrogate): 1,4-dioxane-d8 concentration is calculated based on 1,4-dichlorobenzene-d4 (SVOC IS1).

Two entries for 1,4-dioxane-d8 will appear in the raw data. The above method allows us to determine the actual recovery of 1,4-dioxane-d8 (as a surrogate) and to correct for the extraction efficiency of native 1,4-dioxane.

Continuing Calibration:

The continuing calibration will be analyzed at level two (2 ng/μL). 1,4-Dioxane response appears to be linear; thus, it would be reasonable to assign the normal SVOC %D limit of ± 25%.

Quantitation Level Standard:

The QLS is analyzed at the 1 ng/μL level with a recovery limit of 50-150%.

Surrogate:

1,4-Dioxane-d8 is added to the SVOC surrogate mix at the 5 ng/μL level. The method blanks, blank spikes, and field samples are spiked with the surrogate during extraction. The SVOC surrogate recovery limits vary depending on the specific SVOC surrogate. Initial analysis results indicate that 1,4-dioxane-d8 was recovered in the 76-124% range in the MDL and P&A standards. For field samples, an initial surrogate recovery limit of 50-130% is therefore recommended.

Matrix Spike:

The SVOC matrix spike mix is modified to include 1,4-dioxane at the 5 μg/L level. Initial analysis results indicate that 1,4-dioxane was recovered in the 72-97% range in the MDL and P&A standards. For field samples, initial MS/MSD recovery limits of 50-130% is therefore recommended.

USEPA REGION 9 LABORATORY
RICHMOND, CALIFORNIA

STANDARD OPERATING PROCEDURE #315

SEMIVOLATILE ORGANICS ANALYSIS

Signature & Title

Prepared by: _____ _____
Li-Pin Lee, ESAT Region 9, ICF Consulting Date

Reviewed by: _____ _____
Richard Bauer, Chemistry Team Leader Date

Approved by: _____ _____
Brenda Bettencourt, Lab. Director Date

Periodic Review:

Signature	Title	Date

STANDARD OPERATING PROCEDURE #315

SEMIVOLATILE ORGANICS ANALYSIS

This SOP was prepared by ICF Consulting for the United States Environmental Protection Agency (USEPA) under the Environmental Services Assistance Team (ESAT) contract (EPA contract No. 68D60005).

APPROVED BY:

Ziyad Rajabi, Organic Group Leader	Date
Surender Kaushik, QA/QC Task Manager	Date
Jerry Vail, ESAT Program Manager	Date

ESAT Document Control Number: B0101063-1371

TABLE OF CONTENTS

1 SCOPE AND APPLICATION 4

2 METHOD SUMMARY 4

3 DEFINITIONS 4

4 HEALTH & SAFETY 6

5 SAMPLE HANDLING AND PRESERVATION 7

6 INTERFERENCES 7

7 APPARATUS AND MATERIALS 7

8 QUALITY CONTROL 9

9 ANALYTICAL PROCEDURES 27

10 DOCUMENTATION 31

11 REFERENCES 37

APPENDIX A 38

APPENDIX B 40

APPENDIX C 42

APPENDIX D 44

APPENDIX E 46

ATTACHMENT A - Semivolatile Organics Run Log example page

ATTACHMENT B - GC/MS Semivolatile Standards Log example page

ATTACHMENT C - Maintenance Logbook example page

1 SCOPE AND APPLICATION

This Standard Operating Procedure (SOP) describes the procedures used for the analysis of selected semivolatile organic compounds by Gas Chromatography/Mass Spectrometry (GC/MS) in extracts prepared from solid or liquid samples by EPA SW-846 extraction and cleanup methods appropriate to the analytes of interest. This SOP is based on procedures contained in EPA Method SW-846 8270.

The applicability of these procedures to specific project data quality objectives must be assessed on a case by case basis. The QC criteria specified in the procedures do not meet compliance criteria for either drinking water or NPDES monitoring projects.

2 METHOD SUMMARY

Sample extracts, which have been fortified with surrogate analytes and internal standards, are injected into a gas chromatograph with a Mass Spectrometer (MS). Analytes are separated in the narrow-bore fused-silica capillary gas chromatographic column during temperature programming, then detected by the MS.

Target semivolatile organic compounds are identified in the sample extract by comparing the mass spectra and GC retention times of the target analytes to the mass spectra and retention times of standards analyzed under the same conditions as samples. A response factor is established for each target and surrogate compound during the initial calibration by comparing the MS response of the quantitation ion produced by the target and surrogate compounds to the MS response for the quantitation ion produced by the associated internal standard. Each target analyte and surrogate are quantitated using an internal standard method of calculation using the average response factors from the initial calibration.

Non-target compounds are identified by comparing the resulting mass spectra of the non-target compound to the mass spectra contained in the National Institute of Standards and Technology (NIST) Library in the MS database. An estimated quantitation is performed for the non-target compounds by comparing the total MS response to the nearest internal standard total MS response, assuming a 1:1 response factor.

3 DEFINITIONS

3.1 Internal Standard (IS) - A pure analyte added to a sample, extract, or standard solution in a known amount and used to measure the relative responses of other method analytes and surrogates that are components of the same solution.

3.2 Surrogate Analyte (SA) - A pure analyte, which is extremely unlikely to be found in any sample, which is added to a sample aliquot in a known amount before extraction or other processing, and is measured with the same procedures used to measure other sample components. The purpose of the SA is to monitor method performance with each sample.

3.3 Laboratory Reagent Blank (LRB) - An aliquot of reagent water, sand, or sodium sulfate that is treated exactly as a sample including exposure to all glassware, equipment, solvents, and surrogates that are used with other samples. The LRB is used to determine if method analytes or other interferences are present in the laboratory environment, the solvents, or the equipment.

3.4 Laboratory Fortified Blank (LFB) - An aliquot of reagent water, sand, or sodium sulfate to which known quantities of the method analytes are added. The LFB is treated exactly as a sample. The LFB is used to determine whether the methodology is in control and to indicate the accuracy associated with laboratory procedures.

3.5 Laboratory Fortified Sample Matrix (LFM) and Laboratory Fortified Sample Matrix Duplicate (LFMD) - Two aliquots of the same sample to which known quantities of the method analytes are added. The LFM and LFMD are treated exactly as samples. The LFM and LFMD are used to determine whether the sample matrix contributes bias to sample results and to measure the precision associated with laboratory procedures

3.6 GC/MS Performance Check Solution (decafluorotriphenylphosphine (DFTPP) - A solution of DFTPP, 4,4'-DDT, pentachlorophenol, and benzidine used to evaluate the performance of the GC/MS system with respect to a defined set of method criteria.

3.7 Stock Standard Solution (SSS) - A concentrated solution containing one or more method analytes prepared in the laboratory using assayed reference materials purchased from a commercial source.

3.8 Primary Dilution Standard Solution (PDS) - A solution of several analytes prepared in the laboratory from stock standard solutions and diluted as needed to prepare calibration solutions and other needed analyte solutions.

3.9 Calibration Standard (CAL) - A solution prepared from the primary dilution standard or stock standard solution and the internal standard and surrogate analytes. The CAL solutions are used to calibrate instrument response with respect to analyte concentration

3.10 Quality Control Sample (QCS) – Equivalent to the mid-point initial calibration solution but prepared from a source different from the source of calibration standards. The QCS is used to check the accuracy of the initial calibration solutions.

3.11 Quantitation Limit Standard (QLS) - The lowest level CAL solution. The QLS is used to verify analytical system response at the quantitation limit.

3.12 System Performance Check Compounds (SPCC) - analytes that typically have low response factors. These compounds are used as indicators of deteriorating system performance.

3.13 Calibration Check Compounds (CCC) - analytes that may show high variability if there are system leaks or reactive sites on the column. These compounds are used as indicators of deteriorating system performance.

4 HEALTH & SAFETY

4.1 The toxicity or carcinogenicity of each reagent used in this method has not been precisely defined; however, each chemical compound should be treated as a potential health hazard. From this viewpoint, exposure to these chemicals should be minimized through the use of personal protective equipment and laboratory engineering and design. A reference file of material safety data sheets (MSDS) is available to all personnel involved in the chemical analysis and can be found in the library (Room 118) or Room 413.

4.2 Methylene chloride is a suspected carcinogen. Effects of overexposure: Acute inhalation or ingestion causes mild central nervous system depression. The primary toxic effect is narcosis. Other toxic effects are pulmonary edema, encephalopathy, and hemolysis. Methylene chloride irritates the eyes, skin, and respiratory tract. No systemic effects have been reported in humans, although excessive concentrations have caused cancer and liver and kidney damage in animals. Emergency and first aid - Inhalation: immediately remove to fresh air. If not breathing, administer mouth-to-mouth rescue breathing. If there is no pulse, administer cardiopulmonary resuscitation (CPR). Contact physician immediately. Eye contact: rinse with copious amounts of water for at least 15 minutes. Get emergency medical assistance. Skin contact: flush thoroughly for at least 15 minutes. Wash affected skin with soap and water. Remove contaminated clothing and shoes. Wash clothing before re-use, and discard contaminated shoes. Get emergency medical assistance. Ingestion: call local poison control center for assistance. Contact physician immediately. Never induce vomiting or give anything by mouth to a victim unconscious or having convulsions.

4.3 Some method analytes have been tentatively classified as known or suspected human or mammalian carcinogens. Stock standard solutions of these compounds must be prepared in a

fume hood. Routine procedures in this SOP do not require contact with concentrated solutions or neat materials. All standard preparation procedures associated with this SOP should be performed in a fume hood wearing protective clothing (lab coats) and safety glasses.

5 SAMPLE HANDLING AND PRESERVATION

5.1 Sample extracts for GC/MS analysis are received from the extraction lab personnel and custody is transferred to the GC/MS laboratory staff. The GC/MS analyst acknowledges the receipt of the sample extracts by signing the appropriate sections in the extraction logbook. Copies of tracking sheets, chain-of-custody records, extraction logbook pages, and percent solids determination records should accompany the sample extracts.

5.2 The extracts are marked with the Region 9 Laboratory number, which can be checked against the tracking sheets and chain-of-custody record to determine the Client sample number, Case number, and Sample Delivery Group (SDG) number.

5.3 Store extracts in the refrigerator in Room 406 at 4 $\pm$ 2°C. Extracts must be analyzed within 40 days of extraction.

5.4 Store extracts in the refrigerator in Room 406 at 4 $\pm$ 2°C following analysis and submission of the data deliverables for an SDG an additional 90 days before segregating for disposal.

6 INTERFERENCES

6.1 Method interferences can be caused by contaminants in solvents, reagents, glassware, and other sample processing apparatus. Phthalates are commonly found as laboratory contaminants. The analytical system must be demonstrated to be free from interferences under the conditions of the analysis by running a laboratory reagent blank as described in Section 9. The use of non-polytetrafluoroethylene (PTFE) tubing, non-PTFE thread sealants, or flow controllers with rubber components should be avoided.

6.2 Contamination by carryover can occur whenever high level and low level samples are sequentially analyzed. Splitless injection port liners must be cleaned carefully or replaced as needed. After analysis of a sample containing high concentrations of compounds, a laboratory instrument blank should be analyzed to ensure that accurate values are obtained for the next sample.

6.3 It is important that samples and standards be contained in the same solvent, i.e., the solvent for final working standards must be the same as the final solvent used in sample preparation. If this is not the case, chromatographic comparability of standards to sample may be affected.

7 APPARATUS AND MATERIALS

7.1 GCMS System

7.1.1 Gas Chromatograph (GC): Hewlett Packard 5890 Series 2 or equivalent capable of multilevel temperature programming and constant carrier gas flow throughout the temperature range. The GC should be equipped with an automatic sample injector, splitless injection port, and Electronic Pressure Control (EPC).

7.1.2 GC column: 30 m, 0.25 mm ID, 0.25 μm df, DB-5MS or equivalent. A fused silica capillary column with a bonded phase coating of 5% phenyl-95% methyl silicone such as DB-5, DB-5MS, Rtx-5, XTI-5, or HP-5. The use of a short (5 m) length of a deactivated, uncoated fused silica column (guard column) between the injection port and the analytical column, to trap nonvolatile extract residues, is optional.

7.1.3 Mass spectrometer: Hewlett Packard 5972 or equivalent. Capable of scanning from 35 to 500 amu every one second or less using 70 volts (nominal) electron energy in the electron impact ionization mode. Must be able to produce a mass spectrum that meets acceptance criteria when 50 ng of DFTPP is injected through the GC inlet.

7.1.4 Data system: HP EnviroQuant ChemStation G1701BA Version B.01.00 or equivalent. Able to control the GC/MS system and to acquire, store, and reduce mass spectral data. The software must be able to process any GC/MS data file by recognizing a GC peak within a retention time window, comparing the mass spectrum from the GC peak with spectral data in a data base, and generate a list of tentatively identified compounds with their retention times and scan numbers. The software must also allow integration of the ion abundance of any specific ion between specified time or scan number limits and to calculate response factors and concentrations of analytes in samples.

7.2 Standard solutions

Document the preparation of all standards in the Semivolatile Standards logbook following EPA Region 9 Laboratory SOP # 840, Notebook Documentation and Control.

7.2.1 Internal Standard Solution (IS) - A solution of acenaphthene-d_{10}, phenanthrene-d_{10}, chrysene-d_{12}, 1,4-dichlorobenzene-d_4, perylene-d_{12}, and naphthalene-d_8 at 2,000 μg/mL each in dichloromethane. Restek catalog # 31206 or equivalent.

7.2.2 Surrogate solution (SA) - A solution of 2-fluorobiphenyl, nitrobenzene-d_5, p-terphenyl-d_{14}, and 1,2-dichlorobenzene-d_4 (B/N surrogates) at 100 μg/mL each and 2-fluorophenol, phenol-d_5, 2,4,6-tribromophenol, and 2-chlorophenol-d_4 (Acid surrogates) at 150 μg/mL each in dichloromethane. Prepare by diluting purchased

solutions - B/N surrogates: Restek catalog# 31002 or equivalent. Acid surrogates: Restek catalog# 31003 or equivalent.

7.2.3 Calibration Stock Standard. A solution of target analytes listed in Appendix B at a concentration of 2,000 µg/mL in dichloromethane. Restek SV calibration mix #2 (cat# 31008), #3 (cat# 31009), #4 (cat# 31010), #5 (cat# 31011), #7 (cat# 31013), and #8 (cat# 31026) or equivalent.

7.2.4 Calibration standards - A solution of target analytes listed in Appendix B at concentrations of 10, 25, 40, 60, and 80 µg/mL. Prepare by diluting from the calibration stock standard. Add 10 µL of the IS solution per 1.0 mL of standard.

7.2.5 GC/MS Performance Check Solution (DFTPP+). A solution of decafluorotriphenylphosphine (DFTPP), 4,4'-DDT, pentachlorophenol, and benzidine at 50 ng/µL each in methylene chloride. Prepare from a purchased solution - ULTRA Scientific cat# GCM-150 or equivalent.

7.2.6 Matrix Fortification Solution - A solution of 1,2,4-Trichlorobenzene, Acenaphthene, 2,4-Dinitrotoluene, Pyrene, n-Nitroso-di-n-propylamine, and 1,4-Dichlorobenzene (B/N spike mix) at 100 µg/mL each and Pentachlorophenol, Phenol, 2-Chlorophenol, 4-Chloro-3-methylphenol, and 4-Nitrophenol (Acid spike mix) at 150 µg/mL each in methanol. Prepare from purchased solutions - B/N spike mix: Restek catalog# 31004 or equivalent. Acid spike mix: Restek catalog# 31005 or equivalent.

7.2.7 Storage of Standard Solutions - Store the unopened ampulated stock standard solutions at 4°C (± 2°C). Store all other working standard solutions in glass bottles or vials with Teflon lined screw caps at ≤-10°C and protect all standards from light. Fresh standards should be prepared every six months, or sooner if comparison with check standards indicates a problem. The standard solution must be checked frequently for stability. Replace all working standard solutions after six months, or sooner if comparison with quality control check samples indicates a problem. CAUTION: Analysts must allow all standard solutions to equilibrate to room temperature before use.

7.2.8 Methylene chloride -- High purity pesticide quality or equivalent.

7.2.9 Helium carrier gas - as contaminant free as possible.

7.3 Syringes (10-µL, 25-µL, 50-µL, 100-µL, 250-µL, 500-µL, 1-mL).

8 QUALITY CONTROL

8.1 Quality control requirements include the initial demonstration of laboratory capability followed by regular analyses of laboratory reagent blanks, laboratory fortified blanks, and laboratory fortified matrix samples.

8.2 The laboratory must perform an initial demonstration of capability with each sample preparation technique used in analyzing analytes of interest with this SOP before analyzing any samples. See EPA Region 9 SOP #880, *Initial and Continuing Demonstration of Capabilities and Proficiency* for requirements and procedures.

8.2.1 Analyze Laboratory Fortified Blanks (LFBs) containing all the analytes of interest at a concentration of 40 µg/L in aqueous samples and 1320 µg/Kg in solid samples, equivalent to 40 µg/mL in the extract, to demonstrate initial laboratory capability.

8.2.2 Analyze LFBs which have been fortified with all analytes of interest at 10 µg/L in water samples and 330 µg/Kg in soil samples, corresponding to 10 µg/mL in the extract for MDL determination.

8.3 Mass calibration.

8.3.1 Calibrate the mass axis of the mass spectrometer daily. You must also calibrate the mass axis whenever the mass spectrometer is shut down, or whenever there is a mass mis-assignment. Mass calibration is performed to ensure the accurate assignment of masses to ions generated in the ion volume of the mass spectrometer. Perfluorotributylamine (FC43) is used to perform calibration of the mass axis. The FC43 spectrum with the following criteria are recommended:

Mas s	Target % of Mass 69
69	100
131	25.0 - 40.0
219	25.0 - 40.0
414	1.4 - 4.0
502	0.5 - 2.0

8.3.2 Take corrective action if the FC43 spectrum does not meet the criteria listed above as DFTPP will probably not pass criteria. The corrective action may be as simple as

adjusting the mass gain and peak width or manually retuning the MS. Alternatively, retuning the MS by selecting target tune with mass ratio(s) set based on the failure on criteria in Section 8.4.4. If retuning the MS does not produce adequate FC43 spectra or repeated failure to meet DFTPP criteria, further maintenance such as cleaning the ion source may be required. See Section 9.4.

8.4 GC/MS System Performance Check

8.4.1 Prior to the analysis of any calibration standards, blanks, and samples (including LFM/LFMDs), the GC/MS system must meet the mass spectral ion abundance criteria for DFTPP. Proper tuning of the instrument is necessary to produce standardized fragmentation patterns of target and non-target compounds.

8.4.2 Frequency of GC/MS Performance Check.

8.4.2.1 Analyze the DFTPP solution once at the beginning of each 12-hour period during which standards, blanks and samples are to be analyzed. The twelve-hour time period begins at the moment of injection of the DFTPP solution. The time period ends after twelve hours have elapsed. If a sample is injected after the 12-hour time period has elapsed it must be re-analyzed.

8.4.3 Analyze the DFTPP solution according to Section 9 of this SOP.

8.4.4 The ion abundance ratios must meet the following criteria:

Mass (m/z)	Relative Ion Abundance Criteria
51	30 - 60% of the base peak
68	less than 2% of mass 69
70	less than 2% of mass 69
127	40 -60% of the base peak
197	less than 1% of mass 198
198	Base peak (100% relative abundance)
199	5 - 9% of mass 198
275	10 - 30% of the base peak
365	Greater than 1% of the base peak
441	Present but less than mass 443
442	Greater than 40% of mass 198
443	17 - 23% of mass 442

8.4.4.1 If the ion abundances fail to meet the criteria listed above the DFTPP chromatogram should be examined for any obvious chromatographic problems (e.g., bad injection leading to poor response etc.) If the problem is determined to be related to poor chromatography, take the necessary corrective action and re-analyze the DFTPP. If the DFTPP continues to fail the ion abundance criteria, retune the mass spectrometer. It may also be necessary to clean the ion source or take other corrective action to achieve the ion abundance criteria. See Section 9.4.

8.4.4.2 Evaluate the breakdown of DDT using Equation 1. Locate the degradation products of 4,4'-DDT (4,4'-DDD and 4,4'-DDE). If the percent breakdown calculated using peak areas based on each Quantitation ion (Qion) exceeds 20%, corrective maintenance must be taken

Equation 1:

$$\%\ 4,4'\text{-DDT Breakdown} = \frac{\text{Total Qion Area (DDE + DDD)}}{\text{Total Qion Area (DDE + DDD + DDT)}} \times 100$$

Qions of DDE: 246 dalton, DDD: 235 dalton, DDT: 235 dalton

8.4.4.3 Benzidine and pentachlorophenol responses should be at their expected levels in the DFTPP solution and peak tailing should be minimal. Replacing the inlet liner and /or the inlet seal and breaking off a portion of the column from the injector end should restore instrument performance.

8.5 Initial calibration.

8.5.1 Calibrate the GC/MS system whenever corrective action which may change instrument response (e.g., ion source cleaning, column replacement, etc.) is performed or if the continuing calibration acceptance criteria have not been met.

8.5.2 Analyze the 10 or 25 μg/mL calibration standard according to Section 9.

8.5.2.1 Evaluate the separations of anthracene /phenanthrene and benzo(a)anthracene/chrysene. Anthracene /phenanthrene should have baseline separation. Benzo(a)anthracene/chrysene should be separated by a valley whose height is less than 25% of the average height of the two peaks. If not, the GC column requires maintenance.

8.5.2.2 If any target analytes, surrogates or internal standards are mis-identified or not found, corrective action or system maintenance is required.

8.5.3 If all performance criteria are met, analyze the remaining initial calibration standards according to Section 9 of this SOP.

8.5.4 The data system calculates the relative response factor (RRF) for each target compound and surrogate for all five calibration standards using Equation 2. The quantitation ions and internal standard assignments are listed in Appendix C.

Equation 2:

$$RRF = \frac{A_x \times C_{is}}{A_{is} \times C_x}$$

Where

A_x = Area of quantitation ion of compound x
A_{is} = Area of quantitation ion for associated internal standard
C_x = Concentration of compound x in μg/mL
C_{is} = Concentration of the associated internal standard in μg/mL

8.5.5 Calculate the average RRF for all analytes

8.5.6 Calculate the percent relative standard deviation (%RSD) of the RRF values for each compound using Equation 3.

Equation 3

$$\%RSD = (SD/ RRF_{avg})\times 100$$

$$SD = \sqrt{\frac{\sum_{i=1}^{n} (x_i - x_{ave})^2}{n-1}}$$

8.5.7 Check the initial calibration for misidentified peaks due to retention time shifts. The most commonly mis-assigned compounds are the 1,3- and 1,4-dichlorobenzenes and the benzo(b) and benzo(k) fluoranthenes.

8.5.8 Verify that the minimum average RRF's in the initial calibration for the following system performance check compounds (SPCC's) is 0.050:

N-nitroso-di-n-propylamine
hexachlorocyclopentadiene
2,4-dinitrophenol
4-nitrophenol

Corrective action must be taken before sample analysis can begin if any SPCC fails the minimum RRF criterion.

8.5.9 All other analytes must meet the minimum RRF criteria in Appendix C.

8.5.10 Verify that the maximum %RSD for the following calibration check compounds (CCC's) in the initial calibration is ≤ 20:

acenaphthene	4-chloro-3-methylphenol
1,4-dichlorobenzene	2,4-dichlorophenol
hexachlorobutadiene	2-nitrophenol
di-n-octyl phthalate	phenol
fluoranthene	pentachlorophenol
benzo(a)pyrene	2,4,6-trichlorophenol

Corrective action must be taken before sample analysis can begin if any CCC fails the maximum %RSD criterion.

8.5.11 All other analytes should meet the maximum %RSD of 20. Any project specific analyte of interest must meet the maximum %RSD criterion. If one or more analytes exceed the RSD limit, the initial calibration may still be acceptable if the following conditions are met:

8.5.11.1 The %RSD of the analytes that exceed the limit is ≤ 30.

8.5.11.2 The mean of the RSD values for all analytes is less than or equal to 20%.

8.5.11.3 If an analyte that exceeds the %RSD limit is found in a sample extract, that extract must be re-analyzed using an initial calibration that meets QC limits for that analyte.

8.5.12 If an ICAL fails because of one standard, a fresh solution of that standard may be re-analyzed and substituted for the failed one in the ICAL. If more than one standard fails, corrective action is required before sample analysis begins.

8.5.13 If the five point calibration fails the minimum RRF or maximum %RSD criteria for target analytes with on column quantitation limits of 25 ng listed in Appendix D, then a four-point calibration, excluding the 10 μg/mL standard, may be used if it meets the initial calibration criteria.

8.5.14 Remember that the lowest concentration standard defines the reporting limit for each compound. If appropriate reporting limits cannot be obtained by this procedure, the system must be repaired so that the criteria are satisfied before any samples are analyzed. If repairs are made to the system, then a new initial calibration must be performed.

8.5.15 No quantitation ion may saturate the detector.

8.5.16 Analyze a QCS sample immediately after each initial calibration. The RRF for each analyte in the QCS must be within 30% of the mean RRF in the initial calibration. If the QCS sample fails, the cause must be determined and corrected before analysis of samples can proceed.

8.5.17 If the initial calibration and the QCS meet the specified criteria, the remainder of the 12-hour analytical period may be used for the analysis of field and QC samples, using the average RRF from the initial calibration to quantitate the sample data.

8.5.18 Manual integration. There will be instances when the data system will not produce accurate integrations. Examples of this are misidentification of a peak, inaccurate dropping of a perpendicular between peaks, or failure to integrate the entire tail of a peak. When necessary, chromatograms can be manually integrated if the following steps are taken (see SOP 835, *Chromatographic Integration Procedures*):

8.5.18.1 Print a view of the chromatogram to be reintegrated using QEDIT. Include the background-subtracted spectrum of the apex of the peak and the reference spectrum. Indicate the reasons for manually integrating the chromatographic results on the chromatogram and initial and date the statement.

8.5.18.2 Reintegrate the peak and print the new view. Save the reintegrated value(s). Print the peak and reference spectra. Document the manual integration on the reintegrated chromatogram and initial and date the statement.

8.5.18.3 Print the new quant report and chromatogram after all manual integrations have been completed. Indicate each manual integration on the new quant report. Document the fact that there was manual integration in the instrument's run log and initial and date the statement.

8.5.18.4 Show the chromatograms, quant reports and log book to a supervisor, QA/QC coordinator or team leader for review and acceptance. The QA/QC coordinator or team leader will initial and date the integrations.

8.6 Calibration Verification

8.6.1 Verify the MS tune and initial calibration at the beginning of each 12-hour period (see Section 8.4.2.1 for definition of 12-hour time period) when analyses of field and QC samples are performed using the following procedure.

8.6.2 Analyze a DFTPP+ solution according to Section 9

8.6.2.1 Check that the DFTPP ion abundances meet the criteria in Section 8.4.4

8.6.2.2 Evaluate the DDT breakdown using the Equation 1 and the acceptance criteria in Section 8.4.4.2.

8.6.2.3 Evaluate the benzidine and pentachlorophenol responses according to the criteria in section 8.4.4.3.

8.6.3 Analyze the calibration verification standard (25 μg/mL) according to Section 9 of this SOP.

8.6.4 The responses of the internal standards in the calibration verification standard must meet the criteria in Section 8.11.2.

8.6.5 Check the calibration verification for misidentified peaks due to retention time shifts. The most commonly mis-assigned compounds are closely eluting pairs such as the benzo(b) and benzo(k)fluoranthenes. If any are found, corrective action must be taken and the chromatogram re-quantitated to ensure the corrective action was successful.

8.6.6 Calculate the relative response factor (RRF) for each target compound and surrogate using Equation 1. The quantitation ions and internal standard assignments are listed in Appendix C.

8.6.7 Calculate the percent difference (%D) between the continuing calibration RRF's and the average RRF's from the most recent initial calibration for each target compound and surrogate using Equation 4.

Equation 4

$$\%D = \frac{RRF_c - avg\ RRF_i}{avg\ RRF_i} \times 100$$

Where :

RRFc = relative response in the continuing calibration
Avg RRFi = average relative response in the initial calibration

8.6.8 Verify that the minimum RRF for the SPCC's listed in section 8.5.8 is 0.050.

8.6.9 All other analytes must meet the minimum RRF's listed in Appendix B.

8.6.10 Verify that the maximum %D for the CCC's listed in section 8.5.10 is ≤ 25.

8.6.11 All other analytes must meet the maximum %D criteria listed in Appendix B.

8.6.12 All project specific analytes of interest must meet the minimum RRF and maximum %D criteria in Appendix B. If one or more analytes exceed the minimum RRF and maximum %D limit, the calibration verification may still be acceptable if the following conditions are met:

8.6.12.1 The %D of the analytes that exceed the limit is ≤ 40.

8.6.12.2 The minimum RRF of the analytes that exceed the limit is 0.050.

8.6.12.3 The mean of the %D values for all analytes is less than or equal to 25.

8.6.12.4 If an analyte that exceeds the QC limits is found in a sample extract, that extract must be re-analyzed using a calibration verification that meets QC limits for that analyte.

8.6.13 If any of the criteria are not satisfied a second continuing calibration may be analyzed. Repeated failure requires the analysis of a new initial calibration before analysis of samples can begin. If repairs to the system are required then a new initial calibration must be performed.

8.6.14 The analyst should observe trends in the data such as declining response, erratic relative response, loss of classes of compounds, etc. which may signal the need for instrument maintenance. See Section 9.4.

8.7 Quantitation Limit Standard analysis

8.7.1 Analyze a quantitation limit standard (QLS) in each 12-hour period (see Section 8.4.2.1 for definition of 12-hour time period) when analyses of field or QC samples are performed. The QLS is used to verify analytical system response at the quantitation limit.

8.7.2 Analyze the 10 μg/mL calibration standard according to Section 9 of this SOP

8.7.3 Calculate the percent of true value for each target compound using Equation 5.

Equation 5

$$\% \text{ True Value} = (Cd / Tv) \times 100$$

Where:

Cd = Concentration determined by analysis
Tv = True value

8.7.4 The accuracy for each analyte, expressed as a percentage of true value must be between 50 - 150%. If the QLS sample fails, the cause must be determined and corrected before analysis of samples can begin.

8.7.5 If the 10 μg/mL QLS standard fails for target analytes with on column quantitation limits of 25 ng listed in Appendix B, then analyze a 25 μg/mL standard. Calculate the % True Value using Equation 6. The %True Value must be between 50 - 150%. If the QLS sample fails, the cause must be determined and corrected before analysis of samples can begin.

8.7.6 If the QLS standard fails, a fresh QLS solution of that standard may be analyzed.

8.8 Laboratory Reagent Blank (LRB) analysis.

8.8.1 An LRB is extracted with each extraction batch in order to demonstrate that the entire analytical system - from extraction through GC/MS analysis - is free of contamination.

8.8.2 Analyze the LRB according to Section 9 of this SOP.

8.8.3 Evaluate the LRB as soon as possible after it has been analyzed to determine if the following criteria have been met:

The LRB is acceptable if it contains less than the quantitation limit (QL) of any single target compound. Exceptions are the target phthalate esters, each of which may be present at up to five times the QL.

8.8.4 The LRB internal standards must meet the criteria listed in Section 8.11.2

8.8.5 The LRB surrogate recoveries must meet the criteria listed in Section 8.12.1

8.8.6 Corrective action - If the LRB is not acceptable, the source of the contamination must be found and eliminated and the problem documented before analysis can proceed. If re-analysis does not solve the problem, the batch may have to be re-extracted. Corrective action is decided by the EPA TOPO on a case by case basis.

8.8.7 If surrogate or internal standard recoveries do not meet acceptance criteria, re-analyze the extract. If the surrogate recoveries still do not meet acceptance criteria, document failure in the report narrative.

8.9 Laboratory fortified matrix and duplicate analysis.

8.9.1 A laboratory fortified matrix and a duplicate sample are extracted and analyzed for each batch of twenty or fewer samples extracted as a group.

8.9.2 LFM and LFMD extracts should be analyzed as soon as possible following the analysis of the sample designated as the laboratory fortified matrix sample.

8.9.3 Analyze the LFM and LFMD according to Section 9 of this SOP.

8.9.4 The recovery and RPD criteria for the LFM and LFMD analyses are as follows:

	%Recovery		**RPD**	
Compound	**Water**	**Soil**	**Water**	**Soil**
Phenol	12 - 110	26 - 100	21	35
2-Chlorophenol	27 - 123	25 - 102	16	50
1,4-Dichlorobenzene	36 - 100	28 - 104	22	27

	% Recovery		RPD	
Compound	**Water**	**Soil**	**Water**	**Soil**
n-Nitroso-di-n-propylamine	41 - 116	41 - 126	38	38
1,2,4-Trichlorobenzene	39 - 100	38 - 107	28	23
4-Chloro-3-methylphenol	23 - 100	26 - 103	42	33
Acenaphthene	46 -118	31 - 137	31	19
2,4-Dinitrotoluene	24 - 100	28 - 100	38	50
4-Nitrophenol	10 - 100	11 - 114	50	47
Pentachlorophenol	9 - 103	17 - 109	50	107
Pyrene	26 - 127	35 - 142	31	36

8.9.5 Calculate the recovery of each compound using Equation 6.

Equation 6

$$\% \text{ Rec} = ((SSR - SR)/SA) \times 100$$

where,

SSR = Spiked sample result (volume/weight corrected)
SR = Sample result (volume/weight corrected)
SA = Spike added

8.9.6 Calculate the relative percent differences (RPD) of the recoveries of each compound in the matrix spike and matrix spike duplicate using Equation 7.

Equation 7

$$RPD = \frac{(LFMC - LFMDC)}{(LFMC + LFMDC)/2} \times 100$$

where:

LFMC = Measured concentration of analyte in LFM
LFMDC = Measured concentration of analyte in LFMD

8.9.7 The limits for LFM/LFMD recovery are advisory limits only. If the limits are not met, then no further action is required, as long as the LFB is within limits, since the purpose of these analyses is to determine matrix effects on compound recovery. However, frequent failure to meet the recovery or RPD criteria should alert the analyst that a problem may exist and must be investigated. The analyst should analyze the matrix spike solution and check the recoveries of the spike compounds. A new solution should be prepared if the recoveries are not within 30% of the expected values.

8.10 Laboratory Fortified Blank (LFB) An LFB is analyzed to demonstrate that the analytical system is in control. The LFB is extracted and analyzed once per batch or every 20 samples, whichever is more frequent. The LFB is an LRB spiked with laboratory fortified matrix solution.

8.10.1 All analytes and surrogates must be recovered within the QC limits listed in section 8.9.4. If not, the source of the problem must be determined prior to reporting any sample data. It usually indicates either a discrepancy between the spiking solution and the calibration standard, or a problem in the extraction laboratory.

8.10.2 The table below lists the action to be taken based on the LFB and LFM/LFMD results.

QC ACCEPTANCE MATRIX

+ = PASS — = FAIL

CASE	1	2	3	4	5	6	7	8
LFB - % REC	+	+	+	+	–	–	–	–
LFM/LFMD -% REC	+	–	+	–	+	–	+	–
LFM/LFMD - RPD	+	+	–	–	+	+	–	–

Case 1: Extraction batch is acceptable.

Case 2: Extraction batch is acceptable; matrix effect confirmed.

Cases 3 & 4: Extraction batch is unsatisfactory. Investigate LFM/LFMD problem and document findings in report narrative.

Case 5: Extraction batch is rejected. The batch may have to be re-extracted unless LFB problem is determined and documented.

Cases 6, 7 & 8: Extraction batch is rejected. Re-extract batch.

8.11 Internal standard recovery.

8.11.1 Check the internal standard recovery, determined by total area, for all standards, blanks, samples, and spikes immediately after analysis in order to determine if all applicable criteria have been met.

8.11.2 If the total area of any internal standard in any blank, sample, or spike analysis changes by more than a factor of two (-50% to +100%) of the corresponding internal standard from the preceding 12-hour calibration standard, the system must be checked for malfunctions and the necessary corrections made (see Section 9.4). After the corrections are made, the analyses performed while the system was not in control must be repeated. Keep in mind that many "corrections" to the system will require a new initial calibration be performed prior to re-analysis of the samples.

8.11.3 If after re-analysis, the total areas for all internal standards are within the criteria, then the problem is considered to have been within the laboratory's control. Report the results from the re-analysis and submit the data for both analyses. Distinguish between the analysis and re-analysis by adding an "RI" suffix to the client sample ID on the re-analysis. The problem must be documented in the report narrative (see Section 10.2.1.1).

8.11.4 If re-analysis of the sample does not solve the problem, report the results from the first analysis and submit the data from both analyses. Distinguish between the analysis and re-analysis by adding an "RI" suffix to the client sample ID on the re-analysis. The problem must be documented in the report narrative (see Section 10.2.1.1).

8.11.5 Check internal standard retention times in all standards immediately after data acquisition. If the retention time for any internal standard changes by more than 0.2 minute from the latest daily calibration standard, the system must be inspected for malfunctions, and the necessary corrections made. Compare the IS retention times in field and QC samples analyzed within the 12-hour analytical period of the initial calibration to the IS retention times in the 25 μg/L standard.

8.12 Surrogate recovery.

8.12.1 Calculate the surrogate recovery in all blanks, samples, and spike immediately after analysis using Equation 8 and compare to the following criteria.

Compound	Water %R	Soil %R	
2-Fluorophenol	21 - 110	25 - 121	
Phenol-d5	10 - 110	24 - 113	
Nitrobenzene-d5	35 - 114	23 - 120	
2-Fluorobiphenyl	43 - 116	30 - 115	
2,4,6-Tribromophenol	10 - 123	19 - 122	
Terphenyl-d14	33 - 141	18 - 137	
2-Chlorophenol-d4	33 - 110	20 - 130	(advisory)

Compound	Water %R	Soil %R	
1,2-Dichlorobenzene-d4	16 - 110	20 - 130	(advisory)

Equation 8

$$\%R = (\text{Amount Found}/\text{Amount Spiked})\times 100$$

8.12.2 Take the following steps if the recovery of one or more of the surrogates is not within the limits.

8.12.2.1 Check to ensure that there are no calculation errors, and check the system performance.

8.12.2.2 Re-analyze the extract if a system performance problem or calculation error is not evident. The extract may be diluted for re-analysis if examination of the chromatogram so indicates (e.g., very large amounts of hydrocarbon).

8.12.2.3 If re-analysis of the extract does not solve the problem, the sample may have to be re-extracted. Corrective action is decided by the EPA TOPO on a case by case basis.

8.12.2.4 Do not re-extract undiluted samples with surrogate recoveries outside the limits if the diluted analysis with acceptable surrogate recoveries is being submitted. Report the event in the run log and report narrative.

8.12.2.5 Do not re-analyze the LFM or LFMD samples, even if the surrogates recoveries are outside the limits.

8.12.2.6 If the sample associated with the LFM/LFMD analyses does not meet the surrogate recovery criteria, it should be re analyzed only if the matrix spike and duplicate surrogate recoveries are within the limits. If the sample and spikes show the same pattern (i.e., outside the limits), then the sample does not need re-analysis. The similarity in surrogate recoveries in the sample and spike analyses must be discussed in the report narrative (See Section 10.2.1.1).

8.12.3 If the surrogate recoveries of the re-analysis of the extract are within limits, then:

8.12.3.1 If the re-analysis was undiluted, the problem was within the laboratory's control. Report the results from the re-analysis and submit the data from both analyses. Distinguish between the analysis and re-analysis by adding an "RE" suffix to the client sample ID on the re-analysis. The problem must be documented in the report narrative (see Section 10.2.1.1).

8.12.3.2 If the re-analysis was diluted, the problem was a matrix effect. Report the results from the re-analysis and submit the data from both analyses and discuss the result in the report narrative. Distinguish between the undiluted and diluted analysis by adding a "DL" suffix to the client sample ID on the diluted analysis. The problem must be documented in the report narrative (see Section 10.2.1.1).

8.12.4 If the sample was re-extracted and the surrogate recoveries of the re-extraction are within limits, then the problem was within the laboratory's control. Report the results from the re-extraction. Distinguish between the original analysis and the re-analysis by adding the "RE" suffix to the client sample ID in the re-analysis. The problem must be documented in the report narrative (see Section 10.2.1.1).

8.12.5 If the re-extraction does not solve the problem, report the results from the first analysis and submit the data from both analyses. Distinguish between the original analysis and the re-analysis by adding the "RX" suffix to the client sample ID in the re-analysis. The problem must be documented in the report narrative (see Section 10.2.1.1).

8.13 Sample dilution.

8.13.1 Dilute and inject a new aliquot of the extract if the on-column concentration of any target compound in any sample exceeds the initial calibration range. Add more internal standard solution to the diluted extract to maintain the initial internal standard concentration. Use the following criteria in performing dilutions:

8.13.1.1 Use the results of the original analysis to determine the approximate dilution factor required to get the largest analyte peak within the initial calibration range.

8.13.1.2 Keep the response of the largest analyte peak for a target compound in the upper half of the initial calibration range of the instrument by choosing an appropriate dilution factor.

8.13.1.3 Do not dilute LFM/LFMD samples to get either the spiked or non-spiked target compounds within the initial calibration range. If the sample from which the spike aliquots were taken contains high levels of the spiked analytes, calculate the concentration and recovery of the analytes from the undiluted analysis, and note the problem in the report narrative.

8.13.1.4 In the case of extremely contaminated samples several dilutions may be required.

8.13.1.5 Distinguish between the undiluted and diluted analysis by adding a "DL" suffix to the client sample ID on the diluted analysis.

8.13.2 Demonstrate that there is no carryover to subsequent analyses after a sample is analyzed that contains one or more target compounds at a level exceeding the initial calibration range of the system. This can be done by analyzing an instrument blank.

8.13.2.1 Monitor the sample analyzed immediately after the contaminated sample for all compounds that were in the contaminated sample that exceeded the limits above. The maximum contamination criteria are as follows:

8.13.2.2 The sample should not contain a concentration above the QL for the target compounds that exceeded the limits in the contaminated sample, unless other analytes present in the sample indicate that the presence of these compounds is likely. The most common scenario for this is when PNAs are found in both samples, and the pattern in the second sample does not follow the pattern in the first.

8.13.3 The most common cause of a carryover is hydrocarbon in the oil/asphalt range. This may require cleaning the injection port and analyzing an instrument blank.

8.14 Review of Target Analytes

Review each reported value for both qualitative and quantitative validity. This process, in particular the qualitative review of mass spectra, relies upon the technical judgement of the analyst.

8.14.1 Qualitative Review

Both the relative retention time and the mass spectra must match those of the standard's in order for a target compound to be identified as present in a sample.

8.14.1.1 Target analytes must elute within 0.06 relative retention time units of the analyte in the continuing calibration standard. The relative retention time is the retention time of the target divided by the retention time of the associated internal standard. If the relative retention time for the target analyte in the CCAL is 0.82 then the peak in the sample must have a relative retention time of 0.76 to 0.88.

8.14.1.2 The intensities of the characteristic ions of a compound must maximize in the same scan or within one scan of each other.

8.14.1.3 The mass spectra used for qualitative identification must be obtained using the GCMS system used to analyze the samples.

8.14.1.3.1 All ions present in the standard mass spectra at a relative intensity of 10 percent of the most abundant ion must be present in the sample spectra.

8.14.1.3.2 The relative intensities of the ions must agree within ±30 % (absolute) between the standard and sample spectra.

8.14.1.3.3 Ions present in the sample at greater than 10 percent abundance but not present in the standard spectra must be reviewed and accounted for by the analyst making the comparison.

8.14.1.3.4 If a compound cannot be verified by these criteria but, in the technical judgement of the analyst, is present the supporting evidence must be indicated on the raw data and the analyte reported.

8.14.2 Quantitative Review

Review reported values to determine that the correct calculations were used to generate the results, that the RRFs from the associated continuing calibration standard were used, and that all other numbers are accurate.

8.14.2.1 Review of data system integrations

The analyst must review the data system integration to verify that the internal standards, surrogates and target compounds are integrated properly. In the

event that the analyst observes an incorrect integration, the analyst must manually correct the integration and document the correction following Section 8.5.11 of this SOP and EPA Region 9 SOP #835, *Chromatographic Integration Procedures.*

8.14.2.2 Water calculations

Calculate results for target analytes using Equation 9:

Equation 9:

$$\text{Conc. } \mu g / L = \frac{A_x \times C_{is} \times V_t \times V_i \times DF}{A_{is} \times \overline{RRF} \times V_o}$$

where:

A_x = area of the quantitation ion of the compound
C_{IS} = concentration of internal standard in μg/mL (normally 20)
DF = dilution factor
A_is = area of the quantitation ion of the associated internal standard
RRF = analyte's mean relative response factor from the initial calibration
V_o = volume of water extracted in mL
V_i = volume of extract injected in μL
V_t = volume of concentrated extract in μL

8.14.2.3 Soil calculations

Calculate results for target analytes using Equation 10:

Equation 10:

$$\text{Conc. ug / Kg (dry weight basis)} = \frac{A_x \times C_{is} \times V_t \times V_i \times DF \times GPC}{A_{is} \times \overline{RRF} \times W \times D}$$

where:

A_x = area of the quantitation ion of the compound
C_{IS} = concentration of Internal Standard in μg/mL (normally 20)
D = dry weight factor (Percent solids/100)
W = weight of sample in grams
A_{IS} = area of the characteristic ion of the associated internal standard
RRF = analyte's mean relative response factor from the initial calibration
V_t = volume of concentrated extract in μL
DF = dilution factor

GPC = GPC factor, normally 1.0 if not used, 2.0 if used
V_i = volume of extract injected in μL

8.15 Review the Tentatively Identified Compound search results for the following:

8.15.1 Verify that all unknown peaks in the chromatogram greater than10 percent of the area of the nearest internal standard are accounted for in the summary.

8.15.2 Relative intensities of the major ions in the NIST reference spectrum (ions greater than 10 percent of the most abundant ion) should be present in the sample.

8.15.3 The relative intensities of the major ions should agree within 20 percent.

8.15.4 Molecular ions present in the reference spectrum should be present in the sample spectrum.

8.15.5 Ions present in the sample spectrum but not in the reference spectrum shall be reviewed for possible background contamination or the presence of co-eluting compounds.

8.15.6 Ions present in the reference spectrum but not within the scan range (35 to 500 amu) of the method should not be considered when making a tentative identification.

8.15.7 If, in the technical judgement of the analyst, no valid tentative identification of the compound can be made, the compound should be reported as "Unknown". The analyst shall attempt classification of the unknown compound (i.e., unknown hydrocarbon, unknown aromatic, unknown chlorinated compound, etc.). The probable molecular weight should be included, if distinguishable.

8.16 If any of the data reports have been edited, or if manual integration or quantitation has been performed, the analyst must identify the changes. A supervisor, QA/QC coordinator, or team leader must review both the original and the changed data and indicate acceptance by initialing and dating the report. See SOP#835, *Chromatographic Integration Procedures*.

9 ANALYTICAL PROCEDURES

9.1 Analytical system preparation.

9.1.1 Calibrate the mass axis and optimize the peak width of the mass spectrometer using FC43 at the beginning of each 12-hour period during which standards or QC or field samples are to be analyzed.

9.1.2 Check the GC/MS system for leaks prior to the analysis of the DFTPP tuning compound. The system must also be checked for leaks after any disconnection and re-connection in the entire system, from the carrier gas source to the MS.

9.1.2.1 Acquire a scan of m/z's 18, 28, and 69. Observe the ratio of the water peak (m/z 18) to the nitrogen peak (m/z 28). If a leak is present in the mass spectrometer, the nitrogen peak will be greater than the water peak. Corrective action must be taken if a leak is detected. The ratios of these ions to the m/z 69 ion should be no more than 10%. Ratios between 10 and 20% indicate a problem that should be repaired as soon as practical, and ratios greater than 20% indicate problems that should be repaired immediately.

9.1.3 The GC/MS system must meet the mass spectral ion abundance criteria for DFTPP and the maximum breakdown criteria for DDT prescribed in Section 8.4 prior to the analysis of any calibration standards, blanks, or samples

9.1.3.1 Analyze the DFTPP+ solution using the system conditions in Appendix E. Obtain ion abundance ratios from a background subtracted average of three scans around the apex of the DFTPP peak or from any one or two of these scans with or without background subtraction. The ion abundance ratios must meet the criteria listed in Section 8.4.4. If not, appropriate corrective action must be taken before calibrations or extracts are analyzed. See Section 9.4.

9.1.3.2 Evaluate the percentage of DDT breakdown as described in Section 8.4.4.2. If it is greater than 20%, take corrective action.

9.2 Calibration - The target compounds for this method are listed in Appendix B.

9.2.1 Five-point initial calibration

Perform a five-point initial calibration in order to demonstrate that the GC/MS system provides a linear response over the desired concentration range.

9.2.1.1 Create a method (if not present already) to operate the GC and collect data as described in Appendix E. Create a sequence to use this method to analyze the standard solutions - 80, 60, 40, 25 and 10 μg/mL.

9.2.1.2 Analyze the 10 or 25 μg/mL standard. Verify that all of the peaks have been properly identified. Update the retention times in the method. Save the method and re-quantitate the chromatogram. Make sure that all of the standards are quantitated using the updated retention times.

9.2.1.3 Update the initial calibration response factors in the method by associating the correct data file with each calibration level. Save the method.

9.2.1.4 Generate the initial calibration summary report. Samples shall not be analyzed if the initial calibration does not meet the criteria specified in Appendix B of this SOP.

9.2.1.5 Analyze a QCS sample immediately after each initial calibration. The RRF for each analyte in the QCS must be within 30% of the mean RRF in the initial calibration. If the QCS sample fails, the cause must be determined and corrected before analysis of samples can proceed.

9.2.1.6 If the initial calibration and the QCS meet all the criteria specified in Section 8.5 of this SOP, the remainder of the 12-hour analytical period may be used for the analysis of blanks, spikes and samples, using the average RRF from the initial calibration to quantitate these data files.

9.2.2 Calibration Verification

Analyze a calibration verification standard once in every 12-hour analytical time period, after DFTPP tuning and prior to continuing with extract analysis. The calibration verification is performed in order to determine if the GC/MS system is operating within the acceptable range as demonstrated by the percent difference and the minimum response factor criteria meeting the appropriate QA/QC criteria. The continuing calibration is analyzed at a level of 25 μg/mL.

9.2.2.1 Analyze the 25 μg/mL standard. Verify that all compounds have been properly identified. Update the retention times in the method. Save the method. Re-quantitate the chromatogram, again verify that all compounds have been properly identified. Select Report Continuing Calibration to Printer. Examine the RRFs and %Ds for method compliance following sections 8.6.4 through 8.6.12 of this SOP. If the continuing calibration meets QC criteria, analysis of extracts can begin.

9.2.2.2 If any of the criteria are not satisfied a second continuing calibration may be analyzed. Repeated failure requires the analysis of a new initial calibration before analysis of samples can begin. If repairs to the system are required then a new initial calibration must be performed.

9.2.2.3 Take corrective action if the continuing calibration fails. This may consist of re-analyzing the standard, clipping the column and replacing the injection port seal, or creating a new five point calibration.

9.2.3 Sample analysis.

Samples can be analyzed only after the DFTPP tune and initial calibration or continuing a calibration meet all of the appropriate criteria specified in Section 8 of this SOP.

9.2.3.1 Setup the GC/MS system with the appropriate GC and mass spectrometer conditions. See Appendix E.

9.2.3.2 Set up a data acquisition sequence. The sample description shall include the client sample ID and the laboratory sample ID. Additional header information shall include the dilution factor, instrument ID, and the analyst's initials.

9.2.3.3 Add 10 μL of the IS solution to each 1 mL of field and QC sample extract.

9.2.3.4 Include all QC sample extracts. It is highly recommended that the LRB, LFB and LFM/LFMD extracts be analyzed as early as possible in the analysis of a batch.

9.2.3.5 After completion of analysis, quantitate the data using the appropriate initial calibration mean RRF's and print out quantitation reports and chromatograms for each field and QC sample.

9.2.3.6 Review the results as discussed in Section 8.14 for identification of target analytes. Manually cross out all reported hits which do not meet the qualitative criteria and document the reason on the quant report. Review all target compounds that are detected to verify they are integrated properly. Review the chromatogram for possible false negatives.

9.2.3.7 Document any required manual integrations as described in Section 8.5.11 and Region 9 SOP #835. Print out the updated quantitation report.

9.2.3.8 Check the sample's internal standard area counts and surrogate recoveries with the criteria in Section 8.11 and 8.12.

9.2.3.9 Dilute and re-analyze the sample extracts if any of the target analytes exceed the calibration range of the instrument. Dilute the extract so that the most prominent target compound will fall within the upper half of the initial calibration range of the instrument.

9.3 Tentatively Identified Compounds (TICs)

9.3.1 Load the data file of the most concentrated valid analysis of the sample.

9.3.2 Examine the spectra for each peak that is not a target, surrogate or internal standard. See how well it matches the tentative identifications given by the data system. Report any unique, likely match, if there is one. If none, so state. Try to give as much information as possible, e.g., "unknown polynuclear aromatic hydrocarbon," "unknown, molecular weight 205 daltons".

9.3.3 The concentration of TIC's should be estimated. Use the TIC area in Equations 9 and 10 and assume the RRF is 1. Use the nearest internal standard free of interferences.

9.3.4 If the base peak saturates the detector, document this in the data. Do not dilute a sample extract to get the base peak of a TIC within the detector range. If a sample extract containing a saturated TIC ion was diluted to get a target compound within calibration range, use the TIC base peak area from the diluted extract to estimate the concentration of the TIC.

9.4 The following are suggested corrective actions which may improve method performance. Document all routine maintenance or corrective actions taken in the maintenance logbook.

9.4.1 Adjust the mass gain and peak width or re-calibrate the mass axis or retune the mass spectrometer.

9.4.2 Replace the injection liner and/or the inlet seal.

9.4.3 Break off a portion of the column (a few inches to a foot or more) from the injector end.

9.4.4 Prepare fresh standard solutions

9.4.5 Clean the ion source

10 DOCUMENTATION

10.1 Data from the Region 9 Laboratory is presented to the client in one of two general reporting formats: a complete data package or a summary report data package. For the former the laboratory provides summary forms of calibration, quality control, and sample results along with the raw data for standards and field and QC samples, logbook pages, a report narrative, and the analytical report spreadsheet to the client. If a summary package is all that is required the laboratory provides a report narrative, analytical results spreadsheet, and sample specific raw data for delivery to the client and collects all other data included in a complete data package and files it at the laboratory. Section 10.2 details the requirements of a complete data package and Section 10.3 lists the summary report requirements.

10.2 Assembly of a complete data package.

A data package for each SDG in each case requiring the delivery of a complete data package shall be assembled by the analyst, or other chemist, according to the following instructions, and in the following order. Each section of the data package shall have a cover sheet titled with the appropriate section name. The data package shall be sequentially numbered after assembly using a hand-operated numerator.

10.2.1 Report Narrative section.

10.2.1.1 The Report Narrative section contains a text narrative describing, but not limited to, the following.

10.2.1.1.1 Site name.

10.2.1.1.2 Case number.

10.2.1.1.3 SDG number.

10.2.1.1.4 Client sample ID - Laboratory sample ID cross reference

10.2.1.1.5 Date(s) the samples were received.

10.2.1.1.6 Protocol used to analyze the samples

10.2.1.1.7 LRB results

10.2.1.1.8 Surrogate recoveries

10.2.1.1.9 Internal standard recoveries.

10.2.1.1.10 LFM/LFMD results.

10.2.1.1.11 LFB results.

10.2.1.1.12 Analytical comments section to include:

10.2.1.1.12.1 Problems with analysis

10.2.1.1.12.2 Examples of calculations

10.2.2 Summary of Analytical Results spreadsheet

10.2.2.1 Include a spreadsheet containing a summary of the results for all target analytes for all samples and LRB's in the data package.

10.2.2.2 The header information for each sample contains the station location, Sample ID, and date sampled.

10.2.2.3 The results section contains the results for each target analyte as follows:

If an analyte is not detected then the quantitation limit with a "U" qualifier will be reported

If an analyte is detected then the value reported on the quant report and the associated qualifier (Section 10.2.5.1) will be reported.

If an analyte requires a dilution then value from the sample dilution will be reported.

10.2.3 Tracking Forms section.

The Tracking Form section contains the following forms.

10.2.3.1 A technical direction form

10.2.3.2 A copy of the chain of custody records received with each sample shipment.

10.2.3.3 A copy of the shipper's air bill, or bill of lading.

10.2.4 QA/QC Summary section.

The QA/QC section contains all of the QA/QC summary forms for the specific sample delivery group. All of the forms are checked by the analyst to ensure that all of the filenames are correct, and that all of the appropriate standards, blanks, samples and spikes have been included.

10.2.4.1 Data analysis of sample SDG matrix summary report

10.2.4.2 Surrogate recovery and internal standard area count data. In a chronological order by instrument.

10.2.4.3 LFB recovery data.

10.2.4.4 LFM and LFMD recovery data.

10.2.5 Initial Calibration section:

10.2.5.1 Copy of the peer reviewed instrument run log page(s).

10.2.5.2 DFTPP tuning report, which includes the pass/fail table, bar spectrum and tabulated mass listing.

10.2.5.3 Initial calibration summary form containing the response factors for each file, the average response factor for each compound, and the percent RSD for each compound in the initial calibration.

10.2.5.4 Quantitation reports and RICs.

10.2.5.5 Documentation of any required manual integrations as described in Section 8.5.11 and Region 9 SOP #835.

10.2.6 Daily Sample Package section.

The daily sample package section contains the following forms and raw data for each sample including QC samples of LFM/LFMD, LFB, and LRB in the data package, assembled in data file alphanumeric order. Each daily package is arranged in chronological order.

10.2.6.1 Quantitation report, data report form listing all detected target compounds, surrogates and internal standards and the levels detected in the sample. All analyses must be included, even those not used. The analyst shall check to be sure that the appropriate qualifier is added to the form as indicated below.

B This analyte was detected in the associated method blank as well as in the sample.

E The amount detected exceeds the calibration range of the instrument.

J The analyte was positively identified . The amount is less than QL but greater than or equal to ½ of QL and/or the associated numerical value is approximate. It is an estimated value.

10.2.6.2 The reconstructed ion chromatogram (RIC) of the data file.

10.2.6.3 The raw spectra and enhanced spectra of the target compounds, internal standards and surrogates detected in the sample, as well as the corresponding reference spectra in order of elution.

10.2.6.4 Documentation of any required manual integrations as described in Section 8.5.11 and Region 9 SOP #835.

10.2.6.5 Non-target compound report form detailing the compound names, retention times, the estimated concentrations, and the CAS number of up to twenty tentatively identified compounds. The exceptions are QC samples of LFB, LFM/LFMD.

10.2.6.6 Enhanced spectra of non-target compounds detected in the sample. Library search listing the three best fits of a forward library search of the non-target compounds.

10.2.6.7 Area summary showing results of integrating the RIC.

10.2.7 Logbooks and Miscellaneous Data.

All logbooks must be peer reviewed and complete in compliance with USEPA Region 9 Laboratory SOP #840, Notebook Documentation and Control.

10.2.7.1 Copies of all applicable standards preparation logbook pages.

10.2.7.2 Copies of extraction log pages.

10.2.7.3 Copies of Percent Solids logbook pages, if applicable.

10.2.7.4 Copies of GPC run log logbook pages, if applicable

10.2.7.5 Copies of applicable Semivolatile Organics Run Log pages

10.3 Summary Report and Raw Data

When the clients' requirements stipulate a summary data package, the laboratory prepares the report narrative, analytical results spreadsheet, and sample specific raw data and organizes other data associated with the package for filing in the event that future data review or validation is required.

10.3.1 Prepare the report narrative according to the requirements listed in Section 10.2.1.

10.3.2 Prepare the analytical results spreadsheet according to the specifications provided in Section 10.2.2.

10.3.3 Organize the raw data associated with the analysis of all the samples in the package for filing and present it for review along with the report narrative and the spreadsheet. No summary forms need be generated with the raw data but any forms which would normally be generated as part of the analysis must be included in the package. For example, the calibration summary reports generated by the data system and used by the analyst to assess the acceptability of the calibration should be filed with the raw data.

10.3.3.1 Include sample tracking information as detailed in Section 10.2.3 as the analyst has a copy of the information readily available.

10.3.3.2 Sample raw data organized by laboratory sample ID must include: the quantitation report; the RIC; the raw and enhanced spectra of the internal standards, surrogates and any target compounds detected in the sample, as well as the enhanced spectra of the corresponding compounds in the calibration file; and enhanced spectra of non-target compounds detected in the sample along with the library search listing the three best matches for the non-target compounds. (Sections 10.2.5.3 through 10.2.5.6)

10.3.3.3 Calibration data must include any available summary information and the quantitation reports and RICs for all initial calibrations and continuing calibrations associated with the SDG. This information must be organized by instrument and date. Additionally, any manual integration must be demonstrated by including the associated peak integration as described in Section 8.5.11.

10.3.3.4 Include raw data for QC samples. Tuning data and the associated summary used by the analyst to determine acceptability, blanks (quant report, RIC and spectra and TICs), LFM/LFMD data (quant report and RICs) should all be included in this order.

10.3.3.5 Runlogs and standard preparation logbooks need not be included in the raw data as these are already filed in an accessible manner in the laboratory.

10.4 Technical review.
Assign the data package an ESAT document control number after assembly. Each data package is reviewed by the GC Group Leader or a senior level chemist, other than the chemist who performed the analyses. All reviews are documented using the review form. After the peer review is performed, a cover letter is prepared and signed by the Group Leader. Final review of the data package is done by ESAT QA/QC Coordinator or ESAT Team Leader and the package is then paginated and submitted to EPA Region 9.

10.5 Injection logbook.
Maintain an injection logbook listing each field and QC sample injected for each instrument in accordance with ESAT SOP #840, *Notebook Documentation and Control.*

10.6 Standards' logbook

Maintain a logbook documenting the preparation of all standard solutions. Record the standard ID, preparation date, expiration date, solvent and solvent lot number used. Record the identification, supplier, lot number, concentration purity, and expiration date of the stock standard solution used. Record the aliquot weight or volume of the stock standard solution, final volume of the standard solution and the concentration of the analyte(s) in the standard. Document the calculations used in preparing the standard.

10.7 Maintenance logbook

Maintain a logbook for each instrument. Record the date, the problem and resolution, and documentation of return to control. Document all preventive or routine maintenance procedures, as well as repairs or corrective or remedial actions in accordance with ESAT SOP #840, *Notebook Documentation and Control.*

11 REFERENCES

1 EPA Method 8270C, *Semivolatile Organic Compounds by Gas Chromatography/Mass Spectrometry (GC/MS)*, Revision 3, December 1996.

2 EPA Method 525.2, *Determination of Organic Compounds in Drinking Water by Liquid-Solid Extraction and Capillary Column Gas Chromatography/Mass Spectrometry*, Revision 2.0, 1995

3 EPA Region 9 SOP #125. *Disposal Procedures for Unused Aqueous Environmental Samples*

4 HP 5972A MSD Hardware Manual

5 HP EnviroQuant Chemstation User's Guide

6 HP Environmental Analysis User's Guide

7 EPA Region 9 SOP #835, *Chromatographic Integration Procedures*

8 EPA Region 9 SOP #840, *Notebook Documentation and Control*

9 EPA Method 8000B, *Determinative Chromatographic Separations*, Revision 2, December 1996.

10 EPA Region 9 SOP #805, *Refrigerator Temperature Monitoring*

11 40 CFR, Part 136, Appendix B.

12 HP 5890 Gas Chromatograph Users Manual

13 HP 6890 Gas Chromatograph Users Manual

APPENDIX A

DEVIATIONS FROM SW-846 METHOD 8270C

1. There is no requirement in the reference method for the analysis of a quality control sample (QCS), or a second source standard.

2. This SOP uses a GC column with a 0.25 μm film instead of a 1 μm film as specified in the reference method.

3 The surrogate solution used in this SOP contains 1,2-dichlorobenzene-d_4 and 2-chlorophenol-d_4, neither of which are specified by method 8270.

4 The reference method recommends a concentration of 40 ng/μL in the sample extract for each internal standard; this SOP specifies 20 ng/μL instead.

5 SW-846 method 3500B referenced by method 8270C specifies a concentration of 200 mg/L for the acid matrix spiking solution; this SOP specifies 150 mg/L.

6 The reference method does not have criteria for the chromatographic separations of anthracene/phenanthrene or benzo(a)anthracene/chrysene.

7. This SOP allows for the re-analysis of certain calibration, QC, and sample solutions if the first analysis fails QC limits. This practice is not addressed in the reference method.

8. This SOP allows for a four-point calibration for certain analytes with on column quantitation limits of 25 ng (see Appendix D). The reference method requires a five-point calibration for all analytes.

9. There is no requirement in the reference method that a quantitation ion not saturate the detector.

10. There is no requirement in the reference method for the analysis of a quantitation limit standard (QLS).

11. This SOP allows the phthalate esters to be present at levels exceeding the QL in the laboratory reagent blank; the reference method does not.

12. The LFB/LFM/LFMD acceptance criteria are predetermined and fixed; they are not updated using laboratory data as in the reference method.

13. The retention times of internal standards must be within 0.2 minute from the latest daily calibration, instead of 0.5 minutes as in the reference method.

14. The acceptance criteria for surrogates are predetermined and fixed; they are not updated using laboratory data as in the reference method.

15. There is no requirement in the reference method that the response of the largest analyte peak in a dilution be kept in the upper half of the initial calibration range.

16. There is no requirement in the reference method that all ions present in the standard mass spectra at a relative intensity of 10 percent of the most abundant ion must be present in the sample spectra.

17. There is no requirement in the reference method that ions present in the sample at greater than 10 percent abundance but not present in the standard spectra must be reviewed and accounted for by the analyst making the comparison.

18. There is no requirement in the reference method that the GC/MS system is to be checked for leaks prior to the analysis of the tuning compound by monitoring m/z's 18, 28, and 69.

19. Diphenylamine is not used as a CCC in this SOP as in the reference method since it is not a target analyte in this SOP.

20. The maximum RSD of target analytes in the initial calibration in this SOP is 20%, not 15% as in the reference method.

21. The maximum RSD for any CCC in this SOP is 20%, not 30% as in the reference method.

22. The maximum %D for any CCC in this SOP is 25, not 20 as in the reference method.

23. The reference method has no %D criteria for analytes in the calibration verification other than the calibration check compounds (CCC's).

APPENDIX B
Calibration Criteria

SEMIVOLATILE COMPOUND	MINIMUM RRF	MAXIMUM %RSD	MAXIMUM %DIFF
Phenol	0.800	20	±25
bis(2-Chloroethyl)ether	0.700	20	±25
2-Chlorophenol	0.800	20	±25
1,3-Dichlorobenzene	0.600	20	±25
1,4-Dichlorobenzene	0.500	20	±25
benzyl alcohol	0.050	20	±25
1,2-Dichlorobenzene	0.400	20	±25
2-Methylphenol	0.700	20	±25
2,2'-oxybis(1-Chloropropane)	0.010	20	±25
4-Methylphenol	0.600	20	±25
N-Nitroso-di-n-propylamine	0.050	20	±25
Hexachloroethane	0.300	20	±25
Nitrobenzene	0.200	20	±25
Isophorone	0.400	20	±25
2-Nitrophenol	0.100	20	±25
2,4-Dimethylphenol	0.200	20	±25
bis(2-Chloroethoxy)methane	0.300	20	±25
2,4-Dichlorophenol	0.200	20	±25
1,2,4-Trichlorobenzene	0.200	20	±25
Naphthalene	0.700	20	±25
4-Chloroaniline	0.010	20	±25
Hexachlorobutadiene	0.010	20	±25
4-Chloro-3-methylphenol	0.200	20	±25
2-Methylnaphthalene	0.400	20	±25
Hexachlorocyclopentadiene	0.050	20	±25
2,4,6-Trichlorophenol	0.200	20	±25
2,4,5-Trichlorophenol	0.200	20	±25
2-Chloronaphthalene	0.800	20	±25
2-Nitroaniline	0.010	20	±25
Dimethylphthalate	0.010	20	±25
Acenaphthylene	0.900	20	±25
3-Nitroaniline	0.010	20	±25
2,6-Dinitrotoluene	0.200	20	±25
Acenaphthene	0.900	20	±25
2,4-Dinitrophenol	0.050	20	±25
4-Nitrophenol	0.050	20	±25
Dibenzofuran	0.800	20	±25
2,4-Dinitrotoluene	0.200	20	±25
Diethylphthalate	0.010	20	±25
4-Chlorophenyl-phenylether	0.400	20	±25
Fluorene	0.900	20	±25
4-Nitroaniline	0.010	20	±25
4,6-Dinitro-2-methylphenol	0.010	20	±25
N-Nitrosodiphenylamine	0.010	20	±25
4-Bromophenyl-phenylether	0.100	20	±25
Hexachlorobenzene	0.100	20	±25

SEMIVOLATILE COMPOUND	MINIMUM RRF	MAXIMUM %RSD	MAXIMUM %DIFF
Pentachlorophenol	0.050	20	±25
Phenanthrene	0.700	20	±25
Anthracene	0.700	20	±25
Carbazole	0.010	20	±25
Di-n-butylphthalate	0.010	20	±25
Fluoranthene	0.600	20	±25
Pyrene	0.600	20	±25
Butylbenzylphthalate	0.010	20	±25
3,3'-Dichlorobenzidine	0.010	20	±25
Benzo(a)anthracene	0.800	20	±25
bis(2-Ethylhexyl)phthalate	0.010	20	±25
Chrysene	0.700	20	±25
Di-n-octylphthalate	0.010	20	±25
Benzo(b)fluoranthene	0.700	20	±25
Benzo(k)fluoranthene	0.700	20	±25
Benzo(a)pyrene	0.700	20	±25
Indeno(1,2,3-cd)pyrene	0.500	20	±25
Dibenzo(a,h)anthracene	0.400	20	±25
Benzo(g,h,i)perylene	0.500	20	±25
SURROGATES			
Nitrobenzene-d5	0.200	20	±25
2-Fluorobiphenyl	0.700	20	±25
Terphenyl-d14	0.500	20	±25
Phenol-d5	0.800	20	±25
2-Fluorophenol	0.600	20	±25
2,4,6-Tribromophenol	0.010	20	±25
2-Chlorophenol-d4	0.800	20	±25
1,2-Dichlorobenzene-d4	0.400	20	±25

APPENDIX C

TARGET COMPOUND LIST FOR SEMIVOLATILE ORGANICS ANALYSIS

The following is the Target Compound List for semivolatile organics, as well as the associated internal standards and surrogates. Included are the internal standard reference for each target compound, as well as the quantitation mass for each analyte.

Compound	Primary Quant Ion	Secondary Ion(s)	Int. Std
Phenol	94	65, 66	1
bis(2-Chloroethyl)ether	93	63, 95	1
2-Chlorophenol	128	64, 130	1
1,3-Dichlorobenzene	146	148, 113	1
1,4-Dichlorobenzene	146	148, 113	1
benzyl alcohol	108	79, 77	1
1,2-Dichlorobenzene	146	148, 113	1
2-Methylphenol	108	107	1
2,2'-oxybis(1-Chloropropane)	45	77, 79	1
4-Methylphenol	108	107	1
N-Nitroso-di-n-propylamine	70	42, 101, 130	1
Hexachloroethane	117	201, 199	1
Nitrobenzene	77	123, 65	2
Isophorone	82	95, 138	2
2-Nitrophenol	139	65, 109	2
2,4-Dimethylphenol	107	121, 122	2
bis(2-Chloroethoxy)methane	93	95, 123	2
2,4-Dichlorophenol	162	164, 98	2
1,2,4-Trichlorobenzene	180	182, 145	2
Naphthalene	128	129, 127	2
4-Chloroaniline	127	129	2
Hexachlorobutadiene	225	223, 227	2
4-Chloro-3-methylphenol	107	144, 142	2
2-Methylnaphthalene	142	141	2
Hexachlorocyclopentadiene	237	235, 272	3
2,4,6-Trichlorophenol	196	198, 200	3
2,4,5-Trichlorophenol	196	198, 200	3
2-Chloronaphthalene	162	164, 127	3
2-Nitroaniline	65	92, 138	3
Dimethyl phthalate	163	194, 164	3
Acenaphthylene	152	151, 153	3
2,6-Dinitrotoluene	165	89, 121	3
3-Nitroaniline	138	108, 92	3
Acenaphthene	153	152, 154	3
2,4-Dinitrophenol	184	63, 154	3
4-Nitrophenol	109	139, 65	3
Dibenzofuran	168	139	3
2,4-Dinitrotoluene	165	63, 182	3
Diethylphthalate	149	177, 150	3
4-Chlorophenyl-phenylether	204	206, 141	3
Fluorene	166	165, 167	3
4-Nitroaniline	138	92, 108	3

Compound	Primary Quant Ion	Secondary Ion(s)	Int. Std
4,6-Dinitro-2-methylphenol	198	182, 77	4
N-Nitrosodiphenylamine	169	168, 167	4
4-Bromophenyl-phenylether	248	250, 141	4
Hexachlorobenzene	284	142, 249	4
Pentachlorophenol	266	264, 268	4
Phenanthrene	178	179, 176	4
Anthracene	178	179, 176	4
Carbazole	167	166, 139	4
Di-n-butylphthalate	149	150, 104	4
Fluoranthene	202	101, 100	4
Pyrene	202	101, 100	5
Butylbenzylphthalate	149	91, 206	5
3,3'-Dichlorobenzidine	252	254, 126	5
Benzo(a)anthracene	228	229, 226	5
bis(2-Ethylhexyl)phthalate	149	167, 279	5
Chrysene	228	226, 229	5
Di-n-Octyl phthalate	149	150, 279	6
Benzo(b)fluoranthene	252	253, 125	6
Benzo(k)fluoranthene	252	253, 125	6
Benzo(a)pyrene	252	253, 125	6
Indeno(1,2,3-cd)pyrene	276	138, 227	6
Dibenzo(a,h)anthracene	278	139, 279	6
Benzo(g,h,i)perylene	276	138, 277	6
SURROGATES			
Phenol-d5	99	42, 71	1
2-Fluorophenol	112	64	1
2,4,6-Tribromophenol	330	332, 141	4
Nitrobenzene-d5	82	128, 54	2
2-Fluorobiphenyl	172	171	3
Terphenyl-d14	244	122, 212	5
2-Chlorophenol-d4	132	68, 134	1
1,2-Dichlorobenzene-d4	152	115, 150	1
INTERNAL STANDARDS			
1,4-Dichlorobenzene-d4	152	115	1
Naphthalene-d8	136	68	2
Acenaphthene-d10	164	162, 160	3
Phenanthrene-d10	188	94, 80	4
Chrysene-d12	240	120, 236	5
Perylene-d12	264	260, 265	6

APPENDIX D

SEMIVOLATILES TARGET COMPOUND LIST AND QUANTITATION LIMITS

Semivolatiles	CAS Number	Water µg/L	Low Soil µg/Kg	Med. Soil µg/Kg	On Column ng
Phenol	108-95-2	10	330	10000	10
bis-(2-Chloroethyl)ether	111-44-4	10	330	10000	10
2-Chlorophenol	95-57-8	10	330	10000	10
1,3-Dichlorobenzene	541-73-1	10	330	10000	10
1,4-Dichlorobenzene	106-46-7	10	330	10000	10
benzyl alcohol	100-51-6	10	330	10000	10
1,2-Dichlorobenzene	95-50-1	10	330	10000	10
2-Methylphenol	95-48-7	10	330	10000	10
2,2'-oxybis (1-Chloropropane)	108-60-1	10	330	10000	10
4-Methylphenol	106-44-5	10	330	10000	10
N-Nitroso-di-n-propylamine	621-64-7	10	330	10000	10
Hexachloroethane	67-72-1	10	330	10000	10
Nitrobenzene	98-95-3	10	330	10000	10
Isophorone	78-59-1	10	330	10000	10
2-Nitrophenol	88-75-5	10	330	10000	10
2,4-Dimethylphenol	105-67-9	10	330	10000	10
bis(2-Chloroethoxy)methane	111-91-1	10	330	10000	10
2,4-Dichlorophenol	120-83-2	10	330	10000	10
1,2,4-Trichlorobenzene	120-82-1	10	330	10000	10
Naphthalene	91-20-3	10	330	10000	10
4-Chloroaniline	106-47-8	10	330	10000	10
Hexachlorobutadiene	87-68-3	10	330	10000	10
4-Chloro-3-methylphenol	59-50-7	10	330	10000	10
2-Methylnaphthalene	91-57-6	10	330	10000	10
Hexachlorocyclopentadiene	77-47-4	10	330	10000	10
2,4,6-Trichlorophenol	88-06-2	10	330	10000	10
2,4,5-Trichlorophenol	95-95-4	25	830	25000	25
2-Chloronaphthalene	91-58-7	10	330	10000	10
2-Nitroaniline	88-74-4	25	830	25000	25
Dimethylphthalate	131-11-3	10	330	10000	10
Acenaphthylene	208-96-8	10	330	10000	10
2,6-Dinitrotoluene	606-20-2	10	330	10000	10
3-Nitroaniline	99-09-2	25	830	25000	25
Acenaphthene	83-32-9	10	330	10000	10
2,4-Dinitrophenol	51-28-5	25	830	25000	25
4-Nitrophenol	100-02-7	25	830	25000	25
Dibenzofuran	132-64-9	10	330	10000	10
2,4-Dinitrotoluene	121-14-2	10	330	10000	10
Diethylphthalate	84-66-2	10	330	10000	10
4-Chlorophenyl-phenylether	7005-72-3	10	330	10000	10
Fluorene	86-73-7	10	330	10000	10
4-Nitroaniline	100-01-6	25	830	25000	25
4,6-Dinitro-2-methylphenol	534-52-1	25	830	25000	25
N-Nitroso-diphenylamine	86-30-6	10	330	10000	10
4-Bromophenyl-phenylether	101-55-3	10	330	10000	10
Hexachlorobenzene	118-74-1	10	330	10000	10
Pentachlorophenol	87-86-5	25	830	25000	25

Phenanthrene	85-01-8	10	330	10000	10
Anthracene	120-12-7	10	330	10000	10
Carbazole	86-74-8	10	330	10000	10
Di-n-butylphthalate	84-74-2	10	330	10000	10
Fluoranthene	206-44-0	10	330	10000	10
Pyrene	129-00-0	10	330	10000	10
Butylbenzylphthalate	85-68-7	10	330	10000	10
3,3'-Dichlorobenzidine	91-94-1	10	330	10000	10

Semivolatiles	CAS Number	Water µg/L	Low Soil µg/Kg	Med. Soil µg/Kg	On Column (ng)
Benzo(a)anthracene	56-55-3	10	330	10000	10
Chrysene	218-01-9	10	330	10000	10
bis(2-Ethylhexyl)phthalate	117-81-7	10	330	10000	10
Di-n-octylphthalate	117-84-0	10	330	10000	10
Benzo(b)fluoranthene	205-99-2	10	330	10000	10
Benzo(k)fluoranthene	207-08-9	10	330	10000	10
Benzo(a)pyrene	50-32-8	10	330	10000	10
Indeno(1,2,3-cd)-pyrene	193-39-5	10	330	10000	10
Dibenzo(a,h)-anthracene	53-70-3	10	330	10000	10
Benzo(g,h,i)perylene	191-24-2	10	330	10000	10

APPENDIX E

GC PARAMETERS

HP6890

Typical operating parameters for the gas chromatograph are as follows:

DFTPP analysis

PARAMETER	SETTING
Injector temperature	280°C
Column Stability time	0.5 minutes
MS Source Temp	230°C
MS Quad Temp	150°C
MSD Heater Temp	280°C
EPC split-splitless inlet	Pulsed splitless
Injection pulse pressure	20 psi until 0.55 min
Purge flow to split vent	20 ml/min @ 0.50 min
Initial Oven Temp	100°C
Initial Oven Time	0 minutes
Temperature Ramp	20°C/minute for 10 minutes
Final Oven Temp	300°C
Final Hold Time	2 minutes
Column Flow rate	~ 1 mL/min
Electron Energy	70 volts (nominal)
Injector	Front
Injection Volume	1.0 μL
Pre Injection	
Sample Washes	0
Solvent A Washes	1
Solvent B Washes	0
Post Injection	
Solvent A Washes	3
Solvent B Washes	3
Pumps	3
Syringe Size	10 μL
Viscosity	0
Plunger Speed	Fast Injection

Target Compound Analysis

PARAMETER	SETTING
Injector temperature	280°C
Column Stability time	0.5 minutes
MS Source Temp	230°C

MS Quad Temp	150°C
MSD Heater Temp	280°C
EPC split-splitless inlet	Pulsed splitless
Injection pulse pressure	20 psi until 0.55 min
Purge flow to split vent	20 ml/min @ 0.50 min
Initial Oven Temp	40°C
Initial Oven Time	1 minutes
Temperature Ramp	20°C/minute
Final Oven Temp	130°C
Temperature Ramp A	12°C/minute
Final Oven Temp A	270°C
Temperature Ramp B	4°C/minute
Final Oven Temp B	313°C
Final Hold Time	2 minutes
Column Flow rate	~ 1 mL/min
Electron Energy	70 volts (nominal)
Injection Volume	1.0 μL
Pre Injection	
Sample Washes	0
Solvent A Washes	1
Solvent B Washes	0
Post Injection	
Solvent A Washes	3
Solvent B Washes	3
Pumps	3
Syringe Size	10 μL
Viscosity	0
Plunger Speed	Fast Injection

Appendix A-3
N-Nitrosodimethylamine (NDMA)

Summary of Calibration and QC Procedures for NDMA (GC/MS SIM)

Method	Applicable Parameter	QC Check	Minimum Frequency	Acceptance Criteria*	Corrective Action
GC/MS /SIM	NDMA	5-point initial calibration	Initial calibration prior to sample analysis	RSD <30 %	Correct problem then repeat initial calibration
		Second-source calibration verification	Once per six-point initial calibration	All analytes within ±25% of expected value	Correct problem then repeat initial calibration
		Calibration verification	Daily, before and at the end of sample analysis and every 12 hours of analysis time	RF for NDMA within ±25% of RF for the 1.0 ug/L Initial Calibration Standard	Correct problem then repeat initial calibration

Method	Applicable Parameter	QC Check	Minimum Frequency	Acceptance Criteria*	Corrective Action
GC/MS /SIM	NDMA	Internal Standards	Immediately after or during data acquisition of calibration check standard	Retention time ±30 seconds: EICP area within -50% to +100% of last calibration verification (12 hours) for each	Inspect mass spectrometer and GC for malfunctions; mandatory reanalysis of samples analyzed while system was malfunctioning
		Method blank	One per analytical batch	No analytes detected ≥ RL	Correct problem then reprep and analyze method blank and all samples processed with the contaminated blank
		LCS	One LCS per analytical batch	QC acceptance criteria is 70 to 120% recovery.	Correct problem then reprep and analyze the LCS and all samples in the affected analytical batch

Method	Applicable Parameter	QC Check	Minimum Frequency	Acceptance Criteria*	Corrective Action
GC/MS /SIM	NDMA	Surrogate spike	Every sample, spiked sample, standard, and method blank	QC acceptance criteria is 60 to 120% recovery	Correct problem then reextract and analyze sample
		Results reported between method detection limit and CRQL are flagged as estimate with a "J" qualifier.	none	none	None
		MDL study	Once per 12 month period	Detection limits established shall be < 0.002 ug/l	None

* Control limits may be modified prior to start of analyses per laboratory specific data

Appendix A-4
Perchlorate

USEPA REGION 9 LABORATORY
RICHMOND, CALIFORNIA

STANDARD OPERATING PROCEDURE 531

ANALYSIS OF PERCHLORATE BY ION CHROMATOGRAPHY

Prepared by: _____ _____
Osellie Salvador, ESAT Region 9, ICF Consulting — Date

Review by: _____ _____
Richard Bauer, Chemistry Team Leader — Date

Approved by: _____ _____
Brenda Bettencourt, Laboratory Director — Date

Periodic Review:

Signature	Title	Date

STANDARD OPERATING PROCEDURE 531

ANALYSIS OF PERCHLORATE BY ION CHROMATOGRAPHY

This SOP was prepared by ICF Consulting for the United States Environmental Protection Agency (USEPA) under the Environmental Services Assistance Team (ESAT) contract (EPA contract No. 68-W-01-028).

APPROVED BY:

Osellie Salvador, Inorganic Group Leader	Date
Surender Kaushik, QA Task Manager	Date
Jerry Vail, ESAT Program Manager	Date

ESAT Document Control Number: B01010000-0073

CONTENTS

1 SCOPE AND APPLICATION 4

2 METHOD SUMMARY 4

3 DEFINITIONS 4

4 HEALTH AND SAFETY 7

5 SAMPLE HANDLING AND PRESERVATION 7

6 INTERFERENCES 7

7 APPARATUS AND MATERIALS 8

8 QUALITY CONTROL PROCEDURES 11

9 ANALYTICAL PROCEDURES 18

10 DOCUMENTATION 22

11 REFERENCES 23

Attachment A - Deviations from Reference Method (EPA 314.0)

Attachment B - Inorganic Standards and Reagents Preparation Log Book

Attachment C - Ion Chromatography Run Log for Dionex 600

Attachment D - Analytical Spreadsheet

Attachment E - QC Summary Report

1 SCOPE AND APPLICATION

1.1 This method covers the determination of perchlorate in reagent water, surface water, ground water, and drinking water using ion chromatography following EPA Method 314.0, "Determination of Perchlorate in Drinking Water Using Ion Chromatography", Rev. 1.0, November 1999. Although not specifically tested, this method is potentially applicable to mixed domestic water and industrial wastewaters.

1.2 The Region 9 Laboratory quantitation limit (QL) for perchlorate is 5.0 *ug*/L.

2 METHOD SUMMARY

2.1 A 1.0 mL volume of sample is injected onto and passed through a series of ion-exchange columns. The perchlorate anion is separated on the basis of its relative affinity to a low capacity, strongly basic anion exchanger. The separated perchlorate anion is directed into a strongly acidic cation suppressor exchanger where it is converted to the highly conductive acid form. The sodium hydroxide eluent is converted to weakly conductive acid. The separated anion in its acid form is detected by electrical conductivity and is determined on the basis of retention time as compared to the external standards. Quantitation is based on peak areas and a quad calibration curve is used to determine concentrations in environmental samples.

3 DEFINITIONS

3.1 Analytical Sample - Any sample in which perchlorate is being determined, excluding standards and calibration blanks.

3.2 Calibration Blank (CB) - A volume of reagent water analyzed immediately after an IPC to check the stability of the baseline.

3.3 Calibration Standard (CAL) - A solution prepared from the stock standard solutions. The CAL solutions are used to calibrate the instrument response with respect to analyte concentration.

3.4 Field Duplicates (FD) - Two separate samples collected at the same time and placed under identical circumstances and treated exactly the same throughout field and laboratory procedures. Analyses of field duplicates indicate the precision associated with sample collection and storage as well as with laboratory procedures.

3.5 Field Reagent Blank (FRB) - An aliquot of reagent water or other blank matrix that is placed in a sample container in the laboratory and treated as a sample in all respects, including shipment to the sampling site, exposure to the sampling site conditions, storage, preservation, and all analytical

procedures. The purpose of the FRB is to determine if contamination is occurring in the field environment. Note: Field reagent blanks cannot be used for LD or LFM analyses.

3.6 Instrument Performance Check Solution (IPC) - A solution of perchlorate used to evaluate the performance of the instrument system with respect to a defined set of criteria. For this method, the initial IPC has been combined with the QCS (3.15) and analyzed as a single solution.

3.7 Laboratory Duplicate (LD) - An aliquot of sample prepared and analyzed separately with identical procedures. Analysis of the sample and LD indicates precision associated with the laboratory procedures, but not with sample collection, preservation or storage procedures.

3.8 Laboratory Fortified Blank (LFB) - An aliquot of a characterized matrix with the analytes of interest, or alternatively, an aliquot of blank matrix to which known quantities of the elements of interest are added in the laboratory. The LFB is analyzed exactly like a sample, and its purpose is to determine whether the methodology is in control, and whether the laboratory is capable of making accurate and precise measurements.

3.9 Laboratory Fortified Sample Matrix (LFM) - An aliquot of an analytical sample to which known quantities of perchlorate is added in the laboratory. The LFM is analyzed exactly like a sample, and its purpose is to determine whether the sample matrix contributes bias to the analytical results. The background concentrations of the analyte in the sample matrix must be determined in a separate aliquot and the measured values in the LFM corrected for background concentrations.

3.10 Laboratory Fortified Matrix Duplicate (LFMD) - A duplicate aliquot of an analytical sample to which known quantities of perchlorate is added in the laboratory. The LFMD is analyzed exactly like a sample, and its purpose is to determine whether the sample matrix contributes bias to the analytical results and to determine laboratory precision. The background concentrations of the analyte in the sample matrix must be determined in a separate aliquot and the measured values in the LFM corrected for background concentrations.

3.11 Laboratory Reagent Blank (LRB) - An aliquot of reagent water or other blank matrix that is treated exactly as a sample. The LRB is used to detect sample contamination resulting from the procedures used to prepare and analyze the samples in the laboratory environment.

3.12 Matrix Conductivity Threshold (MCT) - The highest permitted conductance of an unknown sample matrix, measured prior to conducting the analysis, which is used to determine when sample matrix dilution is required. The conductance of a sample matrix is proportional to the common anions present in the matrix (which contribute to the level of total dissolved solids [TDS]) which can greatly affect the integrity of this analysis. The value for this threshold is dependent on the conditions, hardware, and state of the hardware employed. Matrix conductivity is measured in microsiemens/cm (uS/cm) or microMhos/cm (uMhos/cm) which are considered equivalent terms.

3.13 Method Detection Limit (MDL) - The minimum concentration of an analyte that can be identified, measured and reported with 99% confidence that the analyte concentration is greater than zero.

3.14 Peak Area to Height Ratio (A/H) - The ratio of the peak area divided by the peak height which is used as a tool to monitor analytical performance. This ratio is used to establish and monitor the MCT and represents an objective means of assessing analytical performance when analyzing high conductivity matrices. A gradual distortion of the baseline is typically observed in the retention time window for perchlorate as the matrix conductivity increases (consistent with elevated levels of common anions) which will more significantly influence peak height relative to the influence on peak area. As the distortion of the baseline increases, this ratio increases, and the integrity of the measured perchlorate will be compromised.

3.15 Quality Control Sample (QCS) - A solution of perchlorate of known concentration that is obtained from a source external to the laboratory and different from the source of calibration standards. It is used to check laboratory performance with externally prepared test materials. For this method, the QCS has been combined with the IPC (3.6) and analyzed as a single solution.

3.16 Quantitation Limit (QL) - The concentration at which confidence in the reported value requires no qualifying remarks. A standard is run at the QL to verify acceptable data quality. Region 9 laboratory currently has a QL of 5 g/L.

3.17 Sample Delivery Group (SDG) - A group of twenty samples or less from a project that is sent to the laboratory for analysis.

3.18 Stock Standard Solution (SSS) - A concentrated solution containing perchlorate prepared in the laboratory using assayed reference materials or purchased from a reputable commercial source.

3.19 Water Sample - For the purpose of this method, a sample taken from matrices classified as drinking, surface, ground, or storm runoff water; or industrial or domestic

4 HEALTH AND SAFETY

4.1 Perchlorates are oxidizing compounds and will render organic matter easily flammable. When perchlorates are mixed with finely divided organic matter they may be explosive.

4.2 The toxicity or carcinogenicity of reagents used in this method have not been fully established. Each chemical should be regarded as a potential health hazard and exposure to these compounds should be as low as reasonably achievable. Specifically, sodium hydroxide is moderately toxic and extremely irritating to skin and mucus membranes. Use this reagent in a fume hood whenever possible and if eye or skin contact occurs, flush with large amounts of water for at least 15 minutes.

Always wear safety glasses or a shield for eye protection, protective clothing and observe proper mixing when working with these reagents.

5 SAMPLE HANDLING AND PRESERVATION

5.1 Samples should be collected in plastic or glass bottles. All bottles must be thoroughly cleaned and rinsed with reagent water. Volume collected should be sufficient to insure a representative sample, allow for replicate analysis and minimize waste disposal.

5.2 Samples are received at the Region 9 Laboratory by EPA staff in Room 503. Sample IDs and dates of collection are verified against the chain-of-custody form.

5.3 Samples must be received and stored at 4 ±2 C. Any deviations from the 4 ±2 C temperature requirements must be noted in the report narrative.

5.4 Holding Time - The recommended sample holding time for perchlorate is 28 days.

6 INTERFERENCES

6.1 Method interferences may be caused by contaminants in the reagent water, reagents, glassware, and other sample processing apparatus that lead to discrete artifacts or elevated baselines in an ion chromatogram. These interferences can lead to false positive results for the target analyte as well as reduced detection limits as a consequence of elevated baseline noise.

6.2 Interferences can be divided into three different categories: direct chromatographic coelution, where an analyte response is observed at very nearly the same retention time as the target anion; concentration dependant coelution, which is observed when the response of higher than typical concentrations of the neighboring peak overlap into the retention time window of the target anion; and, ionic character displacement, where retention times may significantly shift due to the influence of high ionic strength matrices (high mineral content or hardness) overloading the exchange sites in the column and significantly shortening target analyte's retention times.

6.2.1 A direct chromatographic coelution may be solved by changing columns, eluent strength, modifying the eluent with organic solvents (if compatible with IC columns), changing the detection systems, or selective removal of the interference with pretreatment. Sample dilution will have little or no effect.

6.2.2 Sample dilution may resolve some of the difficulties if the interference is the result of either concentration dependant coelution or ionic character displacement, but it must be clarified that sample dilution will alter the reported quantitation limit (QL) by a proportion equivalent to that of the dilution.

6.3 Sample matrices with high concentrations of common anions such as chloride, sulfate and carbonate can make the analysis problematic by destabilizing the baseline in the retention time window for perchlorate. This is evidenced by observing the protracted tailing following the initial elution of the more weakly retained anions (chloride, sulfate and carbonate) which extends into the perchlorate retention time window. These common anion levels can be indirectly assessed by monitoring the conductivity of the matrix. Consequently, all sample matrices must be monitored for conductivity (Section 9.3) prior to analysis. When laboratory determined Matrix Conductivity Threshold (MCT) is exceeded, procedures incorporating sample dilution must be performed as specified in Section 9.3.7.

6.4 Samples that contain particles larger than 0.45 microns and reagent solutions that contain particles larger than 0.20 microns require filtration to prevent damage to instrument columns and flow systems.

7 APPARATUS AND MATERIALS

7.1 Apparatus

7.1.1 Dionex Ion Chromatograph System - Includes the Advance Chromatography Module, Gradient Pump, Eluent Degas Module, an Auto-Regen System that includes a Pump, Anion Cartridge and a Regenerant Reservoir, Conductivity Cell Detector, Dionex Advance Computer Interface and Dionex DX-600 Data Chromatography Software.
7.1.2 Dionex Autosampler.
7.1.3 Anion Guard Column - Dionex IonPac AG16 4-mm (10-32), or equivalent.
7.1.4 Anion Separator Column - Dionex IonPac AS16 4-mm(10-32), or equivalent.
7.1.5 EG40 Eluent Generator using Dionex EluGenCartridge (Potassium Hydroxide), or equivalent.
7.1.6 Analytical Balance - capable of weighing accurately to ±0.0001 g.
7.1.7 Class "S" weights.
7.1.8 Stirrer Plate and stirring bars.
7.1.9 Disposable Syringe Filters, 0.20 micron and 0.45 micron.
7.1.10 10 mL Disposable Syringes with luer-lock fittings.
7.1.11 Dionex Polyvials, 5 mL capacity with filter caps (Dionex P/N 38141).
7.1.12 Drying oven, capable of being controlled at 105 ± 5 C.
7.1.13 Desiccator.
7.1.14 An Eppendorf air-displacement pipetter capable of delivering volumes ranging from 100 to 2500 uL with an assortment of high quality disposable pipet tips, or equivalent.
7.1.15 Conductivity bridge, range 1 to 200,000 umhos per centimeter with automated temperature compensation (VWR Model EC 2052 Catalog No. 23198-013 or equivalent).
7.1.16 Conductivity cell, cell constant 1.0 or micro dipping type cell with 1.0 constant (VWR Catalog No. 23198-020 or equivalent).

7.2 Glassware and Incidentals

7.2.1 Volumetric Class "A" Flasks - 2000 mL, 1000 mL, 500 mL, 250 mL and 100 mL.
7.2.2 Volumetric Class "A" Pipettes - 50 mL, 25 mL, 10 mL and 5 mL.
7.2.3 Plastic or Teflon spray bottle.
7.2.4 Porcelain evaporating dish, 150-mL volume.

7.3 Materials and Reagents

Reagents may contain impurities which might affect analytical data. Only high-purity reagents that conform to the American Chemical Society (ACS) specifications should be used. If the purity of a reagent is in question, analyze for contamination. Record all standard and reagent preparations in the Inorganic Standards and Reagents Preparation Log Book (Attachment B).

7.3.1 Reagent water - All references to reagent water in this method refer to ASTM Type II grade water, ASTM D1193.
7.3.2 Degassed reagent water - Reagent water that has been purged with helium for 2 minutes.
7.3.3 Potassium Perchlorate ($KClO_4$), reagent grade.
7.3.4 Sulfuric Acid (H_2SO_4), concentrated, reagent grade.
7.3.5 Sodium Hydroxide (NaOH, (CASRN) 1310-73-2), reagent grade.
7.3.6 Sodium Chloride (NaCl, CASRN [7647-14-5]), reagent grade.
7.3.7 Sodium Sulfate (Na_2SO_4, CASRN [7757-82-6]), reagent grade.
7.3.8 Sodium Carbonate (Na_2CO_3, CASRN [497-19-8]), reagent grade.
7.3.9 Conductivity Solution - Purchase a 1000 *u*mhos/cm solution from a reputable vendor (VWR Brand Catalog No. 23226-603 or equivalent).
7.3.10 Gases
7.3.10.1 Helium, Ultra high purity (UHP).
7.3.10.2 Nitrogen, Ultra high purity (UHP).

7.4 Preparation of Solutions and Standards

Record all standard and reagent preparations in the Inorganic Standards and Reagents Preparation Log Book (Attachment B).

7.4.1 Eluent Solutions

7.4.1.1 Reagent water (Section 7.3.1).

7.4.2 Stock Standards: Stock standard solutions may be purchased as certified solutions or prepared from ACS reagent grade materials (dried at 105°C for 30 minutes) and are stable for 1 month when stored at 4°C.

7.4.2.1 1000 mg/L Perchlorate Stock Standard - Prepare by dissolving 0.1393 g $KClO_4$ in reagent water and dilute to volume in a 100-mL volumetric flask. Alternatively, a 1000 mg/L stock standard solution may be purchased from a reputable supplier such as SPEX, E.R.A. or Inorganic Ventures.

7.4.2.2 10 mg/L Intermediate standard perchlorate solution. Pipet 1.0 mL of the perchlorate stock standard solution (7.4.2.1) into a 100-mLvolumetric flask and dilute to volume with reagent water. Prepare fresh daily.

7.4.2.3 Calibration Standard 5: 100 *u*g/L perchlorate standard - Pipet 1.0 mL of intermediate standard (7.4.2.2) into a 100-mL volumetric flask and dilute to volume with reagent water. Prepare fresh daily.

7.4.2.4 Calibration Standard 4: 50 *u*g/L perchlorate standard - Pipet 0.5 mL of intermediate standard (7.4.2.2) into a 100-mL volumetric flask and dilute to volume with reagent water. Prepare fresh daily. This calibration standard will also be analyzed as the continuing IPC.

7.4.2.5 Calibration Standard 3: 25 *u*g/L perchlorate standard - Pipet 0.25 mL of intermediate standard (7.4.2.2) into a 100-mL volumetric flask and dilute to volume with reagent water. Prepare fresh daily.

7.4.2.6 Calibration Standard 2: 10 *u*g/L perchlorate standard - Pipet 10.0 mL of Calibration Standard 5 (7.4.2.3) into a 100-mL volumetric flask and dilute to volume with reagent water. Prepare fresh daily.

7.4.2.7 Calibration Standard 1: 5 *u*g/L perchlorate standard - Pipet 5.0 mL of Calibration Standard 5 (7.4.2.3) into a 100-mL volumetric flask and dilute to volume with reagent water. Prepare fresh daily. This calibration standard will also be analyzed as the QL sample at the beginning of the analytical run (after the IPC/QCS/LFB and initial CB have been analyzed).

7.4.3 IPC/QCS/LFB Standard: The IPC/QCS/LFB is obtained from a source external to the laboratory and different from the source of calibration standards. It is used to check laboratory performance with externally prepared test materials. The Region 9 laboratory uses a custom solution from E.R.A. (part #: Perchlorate) containing 1000 *u*g/L perchlorate. A 45 *u*g/L IPC/QCS/LFB standard is prepared by pipetting 4.5 mL of the 1000 *u*g/L IPC/QCS stock standard into a 100-mL volumetric flask and diluting to volume with reagent water. Prepare fresh daily.

7.4.4 Regenerant Solution

7.4.4.1 A regenerant solution of 50 mN H_2SO_4 is prepared by adding 5.6 mL of concentrated H_2SO_4 to approximately 4000 mL of reagent water and bringing to final volume in a 4-L volumetric flask.

7.4.5 Mixed Common Anion Stock Solution - containing the anions chloride, sulfate and carbonate each at 25 mg/mL anion concentration. This solution is used to prepare simulated common anion samples in the determination of the MCT.

7.4.5.1 Dissolve the following salts in reagent water to a final volume of 25 mL:
1.0 g sodium chloride (Section 7.3.6) = 0.61 g Cl
0.93 g sodium sulfate (Section 7.3.7) = 0.63 g SO4
1.1 g sodium carbonate (Section 7.3.8) = 0.62 g CO3

8 QUALITY CONTROL PROCEDURES

8.1 EPA Region 9 Laboratory operates a formal quality control (QC) program. As it relates to this SOP, the QC program consists of an initial demonstration of laboratory capability, and the periodic analysis of laboratory reagent blanks, fortified blanks, QCS samples and other laboratory solutions as a continuing check on performance. The laboratory is required to maintain performance records that define the quality of the data that are generated.

8.2 Initial Demonstration of Proficiency - Prior to use in routine analysis, each analyst must perform the procedures noted in Region 9 Laboratory SOP 880.

8.2.1 Matrix Conductivity Threshold (MCT)- The MCT is an individual laboratory defined value which must be determined by preparing a series of sequentially increasing, common anion fortified, reagent water samples each contain a constant percholorate concentration. Initially, a reagent water prepared LFB, containing no common anions, must be analyzed which contains perchlorate at a suggested concentration of 25 *u*g/L perchlorate. Next, the series of sequentially increasing anionic solutions are prepared, each containing perchlorate at a suggested concentration of 25 *u*g/L, which also containing the individual common anions of chloride, sulfate and carbonate, all included at uniform increasing concentrations of 200, 300, 400, 500, 600, 800, and 1000 mg/L for each anion. A concentration of 25 *u*g/L perchlorate has been suggested assuming the QL has been set at 5.0 *u*g/L. If a laboratory's QL is higher, choose a perchlorate concentration for this exercise at approximately 5 times that QL.

8.2.1.1 Prepare the mixed common anion stock solution (see Section 7.4.5) containing chloride, sulfate and carbonate, each at 25 mg/mL.

8.2.1.2 Prepare the LFB at suggested perchlorate concentration of 25 *u*g/L by diluting 0.625 mL of the 1000 *u*g/L perchlorate standard to a final volume of 25 mL.

8.2.1.3 Next, prepare the series of common anion fortified reagent water samples by adding 0.20 mL, 0.30 mL, 0.40 ml, 0.50 mL, 0.60 mL, 0.80 mL, and 1.00 mL of the mixed common anion stock solution (Section 7.4.5) into separate 25 mL volumetric flasks. Next, add 0.625 mL of the 1000 *ug*/L perchlorate standard to each 25 mL volumetric flask and dilute to volume with reagent water to yield a final perchlorate concentration of 25 *ug*/L.

8.2.1.4 Measure and record the conductance of each of these prepared solutions on a calibrate conductivity meter (This meter must be calibrated as described in Section 9.3 prior to measuring conductance). To use as a relative reference conductance, the 400 mg/L mixed anion sample, which contains chloride at 400 mg/L, sulfate at 400 mg/L and carbonate at 400 mg/L, should display a conductance of between 3200 uS/cm and 3700 uS/cm.

8.2.1.5 Analyze each solution, recording the peak area to height (A/H) ratio and the quantified concentration of perchlorate. In many data acquisition and instrument control software, the peak area to height ratio is a definable parameter which can be specified for printout on the analysis report.

8.2.1.6 Both the A/H ratio and quantified perchlorate concentration for the LFB and the 200 mg/L mixed common anion solution should be reproducibly consistent but as the common anion levels increase, the A/H ratio will aso begin to increase as the peak height is distorted and reduced. As the peak is distorted, the area will also eventually begin to be distorted and the quantitated concentration will be reduced, but this is typically secondary, with the ratio of peak area to height initially prediction this pending quantitation problem.

8.2.1.7 Calculate the A/H ratio percent difference ($PD_{A/H}$) between the average A/H ratio for the LFB (A/H_{LFB}) and the average A/H ratios for each mixed common anion solutions (A/H_{MA}) using the following equation:

$$PD\ A/H = |(A/H_{LFB} - A/H_{MA})| / A/H_{LFB} * 100$$

8.2.1.8 As the conductivity of the matrices increase, the $PD_{A/H}$ will increase. The MCT is the matrix conductance where the $PD_{A/H}$ exceeds 20%. To derive the MCT, perform a linear regression on these data by plotting $PD_{A/H}$ (as the independent variable, x) versus the matrix conductance (as the dependent variable, y). The resulting regression data should yield an r2 value of > 0.95. Record the "constant" (intercept value) and the "X-coefficient" (slope) and calulate the MCT as follows,

MCT = (20%) x (X-coefficient) + (constant)

NOTE: Be careful to consistently apply percentages as either whole numbers or as fractional values (20%=0.20) for both the regression analysis and MCT calculation.

8.2.1.9 As an alternate to the regression analysis, the laboratory can choose to establish their MCT at the conductance level of the highest mixed anion solution which yielded a $PD_{A/H}$ value below the 20% threshold.

8.2.1.10 As a final procedure, the laboratory should confirm their perchlorate QL in a mixed common anion solution which reflects a conductance near (within +/- 10%) that specified as the MCT. This solution must contain perchlorate, at the laboratory determined QL, as well as the common anions chloride, sulfate and carbonate, prepared consistent with the instruction for mixed anion solutions in this section and at a concentration estimated to generate a conductance near the MCT. The conductance of this solution must be measured at within +/-10% of the MCT and followin gthe analysis, the recovered perchlorate must be between 70-130% of the QL concentration. If the QL recovery fails this criteria, the MCT should be lowered by 10% and this MRL verification must be repeated.

8.2.1.10 Prior to conducting any field sample analysis, the conductivity of that matrix must be determined. When the conductance of a field sample is above the MCT, sample dilution or pretreatment must be performed.

8.3 Routine Analytical Quality Control

8.3.1 Calibrate the instrument using the standards prepared in Section 7.4.2. Check the correlation coefficient (r); the correlation coefficient of the curve must be $\geq$0.995 or the instrument must be re-calibrated. All five standards must be used when determining the correlation coefficient. The software cannot handle a blank as a standard; analyze a blank immediately after the calibration but before the IPC/QCS/LFB. The blank must be less than ½ the QL or the instrument re-calibrated.

8.3.2 IPC/QCS/LFB and IPC - The accuracy and stability of the calibration shall be verified by the initial analysis of an IPC/QCS/LFB standard and the continued analysis of an IPC standard. The IPC/QCS/LFB (true value of 45 *ug*/L) standard must be from a source external to the calibration standards. It must be analyzed at the beginning of the analytical run. The IPC (true value of 50 *ug*/L) standard must be analyzed after every 10 samples and at the end of the analytical run. The recovery of perchlorate in the IPC/QCS/LFB and IPC is calculated as follows:

$$\%R = \frac{M}{T} \times 100$$

Where

%R = percent recovery of the standard.

M = measured concentration of perchlorate in the IPC/QCS/LFB or IPC, *ug*/L.
T = true concentration of perchlorate in the IPC/QCS/LFB or IPC, *ug*/L.

If the IPC/QCS/LFB or IPC recoveries exceeds the limits of 90-110%, the analysis shall be terminated. The cause of the poor recovery must be determined and the problem corrected. The instrument must be re-calibrated and all samples not bracketed by acceptable IPC/QCS/LFB and IPC results must be re-analyzed.

8.3.3 CB - The stability of the baseline must be monitored by analyzing a CB immediately after the IPC/QCS/LFB standard and every IPC standard. If the absolute value of the CB result is less than or equal to the QL, the result is acceptable. If the absolute value of the CB result exceeds the QL, the analysis must be terminated. The cause of the high CB result must be determined and the problem corrected. The instrument must be re-calibrated and all samples not bracketed by acceptable CB results must be re-analyzed. If no preparation steps were required, the initial CB can also be used as the LRB.

8.3.4 Quantitation Limit (QL) - To verify the ability to detect perchlorate near the QL, a QL standard must be analyzed at the QL level (Section 1.2) at the beginning of the analytical run but not before the IPC/QCS/LFB. The QL standard has a true value of 5 *ug*/L. The recovery of perchlorate in the QL is calculated as follows:

$$\%R = \frac{M}{T} \times 100$$

Where
%R = percent recovery of the standard.
M = measured concentration of perchlorate in the QL, *ug*/L.
T = true concentration of perchlorate in the QL, *ug*/L.

If the QL recovery exceeds the limits of 70-130%, the analysis shall be terminated. The cause of the poor recovery must be determined and the problem corrected. The instrument must be re-calibrated and all samples analyzed after the out-of-control QL standard must be re-analyzed. If, after re-calibration, the QL recovery still exceeds the 70-130% limits, the calibration standards must be re-prepared and the instrument re-calibrated.

8.3.5 LRB - The laboratory must analyze at least one LRB daily or with each batch of 20 or fewer samples of the same matrix, whichever is more frequent. LRB data are used to assess contamination from the laboratory environment. LRB values that exceed the QL indicate potential

laboratory contamination. If the potential contamination significantly impacts the analytical results, the LRB must be re-prepared along with the affected samples, and re-analyzed. Unless specified otherwise by project DQOs, the following statements describe when samples must be re-prepared and re-analyzed:

1) If the sample concentration is less than or equal to 5 times the QL and the LRB concentration is greater than the QL, the LRB and sample must be re-prepared and re-analyzed.

Note: Most analytical samples will not require any preparation and thus the initial CB can be used as the LRB. An exception to this would be for any samples which are turbid or which contain any solid material which may clog the filter cap on the polyvial. These samples will require filtration through a syringe filter prior to transferring to the polyvial for analysis. A LRB MUST also be filtered through a syringe filter prior to transferring to the polyvial for analysis to determine if there is contamination from the syringe filter.

8.3.6 LFB - Region 9 laboratory uses the QCS (45 *ug*/L perchorate) as the LFB; the QCS and LFB would be the from the same source and are also analyzed as the initial IPC. No preparation step is required.

8.3.7 LD - Sample homogeneity can affect the quality and interpretation of the data. LD results can be used to assess sample homogeneity. Laboratory duplicates are only to be analyzed when the level of perchlorate in the QC sample is greater than 4 times the added 25 *ug*/L LFM/LFMD spike.

One LD must be prepared for every 10 routine samples of the same matrix in a sample batch (e.g., 1 LD for a batch containing 1-10 routine samples, 2 LDs for a batch containing 11-20 routine samples, etc.). Shake the routine sample selected as the LD, obtain a representative aliquot, and proceed with sample preparation and analysis, treating the LD sample as a routine sample. Calculate the relative percent difference using the following equation:

$$RPD = \frac{|C_{ld} - C|}{(C_{ld} + C)/2} \times 100$$

where:

RPD	=	relative percent difference.
C_{ld}	=	measured perchlorate in the LD, corrected for any dilutions *ug*/L.
C	=	measured perchlorate in the routine sample, corrected for any dilutions, *ug*/L.

The relative percent difference (RPD) for perchlorate must be ≤20% for samples. The absolute difference between the sample and duplicate results must be less than the quantitation limit for samples with perchlorate concentrations less than 5 times the quantitation limit. If the control limits are exceeded, the perchlorate result must be flagged as estimated (J) on the analytical spreadsheet and a comment added on the spreadsheet and report narrative informing the data user that sample imprecision may be present in samples of similar composition.

8.3.8 LFM - Sample homogeneity and the chemical nature of the sample matrix can affect perchlorate recovery and the quality of the data. LFM results can be used to assess these matrix effects and potential impact to data usability. One LFM must be prepared for every 10 routine samples of the same matrix in a sample batch (e.g., 1 LFM for a batch containing 1-10 routine samples, 2 LFMs for a batch containing 11-20 routine samples, etc.). The LFM must be spiked at two levels, 5 *ug*/L and 25 *ug*/L. Calculate the percent recovery for perchlorate using the following equation:

$$\%R = \frac{C_{lfm} - C}{s} \times 100$$

Where

$\%R$	=	percent recovery.
C_{lfm}	=	measured concentration in the LFM corrected for sample preparation and any dilutions, g/L.
C	=	measured concentration of analyte in the routine sample corrected for sample preparation and any dilutions, g/L.
s	=	expected analyte concentration in the LFM, corrected for sample preparation and any dilutions, g/L.

If the value of ***C*** is less than 4 times the value of ***s***, the acceptance window for ***%R*** is 70-130%. If the recovery of analyte falls outside the acceptance window other QC data must be examined to determine if a matrix problem exists. If the laboratory performance is in control (i.e., the IPC, IPC/QCS/LFB and QL results are acceptable), the poor LFM recovery is most likely matrix-related. The affected analyte result must be flagged as estimated (J) on the analytical spreadsheet and a comment added on the spreadsheet and report narrative informing the data user that matrix effects may be present in samples of similar composition.

8.3.9 LFMD - Sample homogeneity can affect the quality and interpretation of the data. LFMD results can be used to assess sample homogeneity. One LFMD must be prepared for every 10 routine samples of the same matrix in a sample batch (e.g., 1 LFMD for a batch containing 1-10 routine samples, 2 LFMDs for a batch containing 11-20 routine samples, etc.). The LFMD must be spiked at two levels, 5 *ug*/L and 25 *ug*/L. Calculate the relative percent difference using the following equation:

$$\%RPD = \frac{|Clfmd - Clfm|}{(Clfmd + Clfm)/2} \times 100$$

Where

$\%RPD$	=	relative percent difference.
C_{lfm}	=	measured concentration in the LFM corrected for sample preparation and any dilutions, g/L.
C_{lfmd}	=	measured concentration in the LFMD corrected for sample preparation and any dilutions, g/L.

If the recovery of analyte falls outside the acceptance window other QC data must be examined to determine if a matrix problem exists. If the laboratory performance is in control (i.e., the IPC, IPC/QCS/LFB and QL results are acceptable), the poor LFMD recovery is most likely matrix-related. The affected analyte result must be flagged as estimated (J) on the analytical spreadsheet and a comment added on the spreadsheet and report narrative informing the data user that matrix effects may be present in samples of similar composition.
The relative percent difference (RPD) between the LFM and LFMD must be ≤20%. If the control limits are exceeded, the affected analyte result must be flagged as estimated (J) on the analytical spreadsheet and a comment added on the spreadsheet and report narrative informing the data user that sample imprecision may be present in samples of similar composition. is suspect due to a matrix effect.

9 ANALYTICAL PROCEDURES

9.1 Calibration and Standardization - The analyst is advised to follow the recommended operating conditions provided by the manufacturer. It is the responsibility of the analyst to verify that the instrument configuration and operating conditions satisfy the analytical requirements, and to maintain quality control data verifying instrument performance.
Typical operating settings for the Dionex DX600 are as follows:

DX600 Detector Parameters

Detector Type: Conductivity
Data Collection time (minutes): 11.50
Data Collection Rate: 1.00
Real time plot scale maximun (uS): 6.000
Real time plot scale minimum (uS): -2.000

DX600 Integration Parameters

Peak detection algorithm: Standard
Starting peak width (seconds):10.00
Peak threshold: 1.00
Peak area reject (area counts): 0.003[Signal]*min

DX600 Smoothing Parameters

Filter Type: No filter

DX600 Integration Data Events

Time	Description
0.00	Inhibit integration On
0.00	Minimum Area 0.003[Signal]*min
7.50	Inhibit integration Off

DX600 Calibration Parameters

External or internal calibration: EXTERNAL
Number of replicates for calibration:1
Rejection: Manual
Level Weighting: Equal
Sample Loop: 740 *u*L
Calibration standard volume: 1.00 mL
Default sample volume: 1.00 mL
Amount units: *u*g/L
Replace retention time: Yes
Update response: Yes
Default dilution factor: 1.00
Default response factor for unknown peaks:0.00
Calculate unknowns by area or height: Area
Flow: 1 mL/min.

9.2 Initial Calibration

9.2.1 An initial calibration is performed by analysis of a blank and five standards of increasing perchlorate concentration (5.0, 10.0, 25.0, 50.0 and 100.0 *u*g/L) with cubic fit. All standards must be used in the calibration. The correlation coefficient for the initial calibration must be $\geq$ 0.995 AND the blank must be less than ½ the QL AND the IPC/QCS/LFB standard analyzed immediately after the calibration must be within 90-110% of the true value for the calibration to be valid. If the calibration does not meet the criteria, the analysis shall be terminated, the problem corrected, and

a new calibration curve performed. In addition, an initial calibration must be performed monthly, when new standards are used, when any instrument parameters have been changed or if any IPC/QCS/LFB is outside the 90-110% method QC limits

9.2.2 The QC samples in Section 8.3 must be analyzed and must be within the appropriate control limits before sample analyses are performed.

9.3 Conductivity Check

9.3.1 Allow samples and standards to reach room temperature. The EC Model 2052 is designed to compensate for temperatures in the 5 to 45°C range but the readings will be most accurate near 25°C. Turn the conductivity meter knob to the "ATC" position. Allow the meter to warm up for 2-3 minutes.

9.3.2 Fill a porcelain dish with standard potassium chloride solution (9.3.9) and immerse the cell in the solution. The electrodes in the cell need to be submerged and the electrode chamber must be freed of trapped air. Tap the cell to remove any bubbles, and dip it two or three times to assure proper wetting. Hold the cell away from the bottom and sides of the dish and make certain it is immersed approximately 1.5 inches. Allow the cell to equilibrate in the solution for 20 seconds.

9.3.3 Rotate the range switch to the lowest range position which gives a reading (within the range). An over-range value is indicated by a "1" followed by blanks. An under-range value is indicated by a reading followed by a small letter "U".

9.3.4 Read the displayed conductance. Record the specific conductance in the Ion Chromatography Run Log for Dionex 600. The units are determined by the range switch.

9.3.5 The standard solution must read within 5% of the theoretical value. If the specific conductance recorded for the standard does not meet this criteria the meter calibration must be adjusted using the STANDARDIZE control on the front of the meter. (If a meter other than the Model 2052 is used refer to the manufacturer's manual for calibration procedures.) Once the meter has been adjusted continue with section 9.7, but then return to section 9.3 and verify the instrument calibration before proceeding with the analysis of samples.

Note: In the event that the meter will not calibrate or fails to maintain calibration the cell may require replacement. Refer to the manufacturer's operating manual for instructions.

9.3.6 Raise the conductivity cell from the sample (and above the dish) and rinse both the inside and outside of the cell with reagent water. Collect the rinsings in the dish and dispose of the waste sample and rinses in an appropriate waste container. Do not wipe the cell to clean it as this may damage the surface.

9.3.7 Determine the specific conductance of all samples using the procedure just described in sections 9.3.1 through 9.3.6, omitting section 9.3.5. Samples which exceed the MCT of 4200 uS/cm must be diluted such that the sample conductivity will be approximately 1000-2000 uS/cm.

9.4 Sample Analysis

9.4.1 Fill a 5mL polyvial with well-mixed sample. Samples which are turbid or which contain solids which may clog the filter cap on the polyvial and damage instrument columns and flow systems require filtration. Dilute samples which exceed the MCT (Section 9.3.7). Attach a 0.45 micron disposable syringe filter to a 10mL disposable syringe; pull out the plunger and pour approximately 10 mL of well-mixed sample into the syringe and reattach the plunger. Apply pressure to the plunger and filter the sample through the syringe filter and into the 5mL polyvial (discard the remaining sample into the waste container and the syringe assembly into a solid waste container). Record any sample filtrations in the comments section of the Ion Chromatography Run Log. (Note - the LRB **must** be filtered if any samples in the batch are filtered.) Attach a filter cap to the 5mL polyvial and push down the filter cap with the supplied tool until it is flush with the top of the polyvial. Label the contents of the polyvial and insert into the autosampler cassette.

9.4.2 Load the autosampler cassettes into the autosampler; the instrument will automatically inject the samples. The sample loop will automatically flushed thoroughly by the instrument program.

9.43 The width of the retention time window used to make identifications is based upon measurements of actual retention time variations of standards over the course of the day.
All chromatograms are reviewed to ensure that the correct peaks are integrated. The retention time windows currently used on the DX600 are listed in the following table:

Parameter	Retention Time (min)	Retention Time Window (min)
Perchlorate	8.67	7.80 - 9.54

9.4.4 If the response for the peak exceeds the working range of the system, dilute the sample with an appropriate amount of reagent water and re-analyze.

An example of a loading list for an analytical run sequence is listed in the table below.

Seq.	Desc.	Seq.	Desc.	Seq.	Desc.	Seq.	Desc.
1	IPC/QCS/ LFB	13	IPC	25	IPC	37	IPC
2	CB/LRB	14	CB	26	CB	38	CB
3	QL	15	S4	27	S14	39	S20
4	IPC	16	S5	28	S14-LFM, 5 *ug*/L	40	IPC
5	CB	17	S6	29	S14-LFMD, 5 *ug*/L	41	CB
6	S1	18	S7	30	S14-LFM, 25 *ug*/L		
7	S1-LFM, 5 *ug*/L	19	S8	31	S14-LFMD, 25 *ug*/L		
8	S1-LFMD, 5 *ug*/L	20	S9	32	S15		
9	S1-LFM, 25 *ug*/L	21	S10	33	S16		
10	S1-LFMD, 25 *ug*/L	22	S11	34	S17		
11	S2	23	S12	35	S18		
12	S3	24	S13	36	S19		

9.5 Data Reduction and Reporting

9.5.1 Data for aqueous samples should be reported in units of *ug*/L using the following calculation:

$$C = M \times D$$

where:

C = final reported concentration, in *ug*/L.
M = measured concentration reported by software, in *ug*/L.
D = sample analysis dilution factor, to account for any dilution.

All results should be reported using no more than two significant figures; however, no values of less significance than the QL may be reported (values near the QL will be reported with only one significant figure). Report down to ½ the QL. Values between ½ the QL and the QL will be flagged as estimated (J flag). For rounding results, adhere to the following rules:

a) If the number following those to be retained is less than 5, round down;
b) If the number following those to be retained is greater than 5, round up; or
c) If the number following the last digit to be retained is equal to 5, round down if the digit is even, or round up if the digit is odd.

9.5.2 The data must be reviewed for correctness and completeness by a chemist other than the analyst. The reviewer must check that the correlation coefficient of the calibration curve is >0.995 and that all sample and standard criteria are within the method QC limits. The reviewer must check the run log for completeness (i.e. standard information present and all sample ID's correct and legible). The reviewer must then sign their name at the bottom of the run log in the space set aside for the reviewer's signature.

9.5.3 There may be occasion where the chromatography software integrates the peak baseline in a manner which may produce an inconsistent value. Manual chromatographic integration is then used to accurately produce a correct baseline. Any manual chromatographic integration must be initialed and dated by the analyst, noted in the Ion Chromatography Run Log for Dionex 600 and approved by the ESAT task leader, ESAT QA/QC director or ESAT team manager the same day the manual integration was performed (Reference 11.7)

10 DOCUMENTATION

10.1 Raw Data

10.1.1 Ion Chromatography Run Log for Dionex 600 - Entries are made for the case number, SDG number, data file name, schedule file name, date of analysis, calibration standard IDs, QC solution IDs, analyst initials, lab sample IDs, client sample IDs, dilution factors and comments, if any. An entry is made for any sample that required manual integration in the "M" column. The Ion Chromatography Run Log for Dionex 600 is maintained in Room 207. (Attachment C)

10.1.2 Inorganic Standards and Reagents Preparation Log Book - Copies of all standard solution preparation entries (CAL, IPC, QL, LFB, LFM, QCS, etc.) must be submitted with each data package. (Attachment B)

10.1.3 Chromatograms and Quantitation Reports - The chromatograms must be scaled such that the baseline used for measuring the peak is visible.

10.2 Report Narrative and Deliverable

The data package consists of the report narrative, reports, and data, as listed in the table below.

Data Package Contents
Report Narrative: Discusses any problems encountered, both technical and administrative, the corrective action taken, and the resolution. All universal analytical flags should also be discussed in the report narrative.
Tabulated sample results on an analytical spreadsheet, with units, sample collection dates, client sample IDs, laboratory IDs and station locations. (Attachment D)
LRB data included on the analytical spreadsheet. (Attachment D)
Duplicate or LFM/LFMD results on a QC summary report with calculated relative percent difference (RPD). (Attachment E)
QCS/LFB, LFM and LFMD results on a QC summary report with calculated percent recoveries (%R). (Attachment E)
Raw sample, standard and QC data, including run logs and any work sheets, if applicable. (Attachments B & C)

11 REFERENCES

11.1 EPA Method 314.0, Determination of Perchlorate in Drinking Water Using Ion Chromatography, Environmental Monitoring Systems Laboratory, Revision 2.1, August 1993.
11.2 Dionex DX-600 Operation and Maintenance Manual, Dionex Corp., Sunnyvale, California 94086, 1999.
11.3 Record 269, Dionex Chromatography Database 4.2.0, Dionex Corp., Sunnyvale, California 94086.
11.4 Region 9 SOP 110, *Sample Receipt, Log-in and Storage.*
11.5 Region 9 SOP 125, *Sample Disposal.*
11.6 Region 9 SOP 130, *Glassware Cleaning Procedures.*
11.7 Region 9 SOP 835, *Chromatographic Integration Procedures.*
11.8 Region 9 SOP 840, *Notebook Documentation and Control.*
11.9 Region 9 SOP 880, *Demonstration of Laboratory Capability and Analyst Proficiency.*

Attachment A
Deviations From Reference Method (EPA 314.0)

A.1 This SOP specifies the use of quadratic regression calibration. Review of instrument response using various calibration protocols demonstrates that instrument response is not linear at low concentrations but that the data fit quad calibration model very well. Using these calibration protocols has resulted in acceptable performance evaluation samples from a variety of sources. Additionally, the SOP requires the analysis of a standard at the QL on a daily basis to verify instrument performance and calibration.

A.2 Sample pretreatment will not be performed.

Appendix A-5
Hexavalent Chromium

- **Method 218.6–Hexavalent Chromium**

This method addresses the determination of hexavalent chromium in water at low levels by use of ion exchange chromatography.

The sample is pumped through three different ion exchange columns and into a conductivity detector. The first two columns, a pre-column (guard) column and a separator column, are packed with a low-capacity, strongly basic anion exchanger. Ions are separated into discrete bands based on their affinity for the exchange sites of the resin. The last column is a suppressor column that reduces the anions in the sample to their corresponding acids. The separated anions in their acid form are measured using an electrical-conductivity cell. Anions are identified based on their retention times compared to known standards. Quantitation is accomplished by measuring the peak height or area and comparing it to a calibration curve generated from known standards.

RLs are listed in Table--1. The calibration, QC, and corrective action, requirements are given in Tables --2and -3

Table---1. RLs for Method

Parameter/Method	Analyte	Water			
		RL	Unit		
Hexavalent Chromium/218.6	Hexavalent Chromium	0.1	ug/L		

Table .-2. QC Acceptance Criteria for Method 218.6

Method	Analyte	Accuracy Water (% R)	Precision Water (% RPD)		
218.6	Hexavalent Chromium	70-140	≤30		

Table 3. Summary of Calibration and QC Procedures for Method 218.6

Method	Applicable Parameter	QC Check	Minimum Frequency	Acceptance Criteria	Corrective Action
218.6	Hexavalent Chromium	Five point	Initial calibration prior to sample analysis	R^2>0.999	Correct problem then continue
		Second source calibration	Once per five point calibration	± 10%	Correct problem then repeat
		Retention time window calculated	Each initial calibration and calibration verification	± 0.5 min.	Correct problem then repeat
		Initial calibration verification	Every 20 samples	Within ± 10% of expected value	Correct problem then repeat
		Calibration verification	After every 20 samples	Within ± 10% of expected value	Correct problem then repeat
		Laboratory control standard	Every 20 samples	70-140%	Correct problem then repeat
		Method Blank	Every 20 samples	No analyte detected ≥ RL	Find problem, repeat
		MS/MSD or Dup/MS	Every 20 samples	70-140%recovery 30%RPD	Find problem, repeat or explain
		MDL Study	Every 12 months	None (0.1ug/l needed)	None

Appendix A-6
TAL Metals (field filtered)

USEPA REGION 9 LABORATORY
RICHMOND, CALIFORNIA

STANDARD OPERATING PROCEDURE 505

DETERMINATION OF TRACE ELEMENTS IN WATER BY INDUCTIVELY COUPLED PLASMA - ATOMIC EMISSION SPECTROMETRY

Prepared by: _____ _____
Stephen Carroll, ESAT Region 9, ICF Consulting — Date

Review by: _____ _____
Richard Bauer, Chemistry Team Leader — Date

Approved by: _____ _____
Brenda Bettencourt, Laboratory Director — Date

Periodic Review:

Signature	Title	Date

STANDARD OPERATING PROCEDURE 505

DETERMINATION OF TRACE ELEMENTS IN WATER BY INDUCTIVELY COUPLED PLASMA - ATOMIC EMISSION SPECTROMETRY

This SOP was prepared by ICF Consulting for the United States Environmental Protection Agency (USEPA) under the Environmental Services Assistance Team (ESAT) contract (EPA contract No. 68-W-01-028).

APPROVED BY:

Osellie Salvador, Inorganic Group Leader	Date
Surender Kaushik, QA Task Manager	Date
Jerry Vail, ESAT Program Manager	Date

ESAT Document Control Number: B0101029-0484

CONTENTS

1 SCOPE AND APPLICATION 4

2 METHOD SUMMARY 5

3 DEFINITIONS 6

4 HEALTH AND SAFETY 8

5 SAMPLE HANDLING AND PRESERVATION 8

6 INTERFERENCES 9

7 APPARATUS AND MATERIALS 11

8 QUALITY CONTROL PROCEDURES 13

9 ANALYTICAL PROCEDURES 18

10 DOCUMENTATION 21

11 REFERENCES 22

Table 1: Method Analytes and Interfering Elements 23

Table 2: Calibration Standard Concentration 24

Table 3: IPC, QCS, LFB/LFM/LFMD Concentrations 25

Attachment A - Deviations from Reference Method
Attachment B - Inorganic Standards and Reagents Preparation Log Book
Attachment C - MET-1 TJA ICAP 61E Run Log
Attachment D - Analytical Spreadsheet
Attachment E - QC Summary Report

1 SCOPE AND APPLICATION

1.1 This SOP provides procedures for the determination of dissolved and total recoverable elements by Inductively Coupled Plasma - Atomic Emission Spectrometry (ICP-AES) in environmental samples for use in the USEPA Region 9 Laboratory, Richmond, CA. It is applicable to water and wastewater. This SOP is based on EPA Method 200.7, Rev. 4.4 (May 1994) and is applicable to the determination of the following elements:

Analyte	Chemical Abstract Services Registry Number (CASRN)	Region 9 Laboratory Quantitation Limits (*ug*/L)
Aluminum (Al)	7429-90-5	200
Antimony (Sb)	7440-36-0	100
Arsenic (As)	7440-38-2	250
Barium (Ba)	7440-39-3	50
Beryllium (Be)	7440-41-7	1
Boron (B)	7440-42-8	100
Cadmium (Cd)	7440-43-9	5
Calcium (Ca)	7440-70-2	100
Chromium (Cr)	7440-47-3	10
Cobalt (Co)	7440-48-4	20
Copper (Cu)	7440-50-8	20
Iron (Fe)	7439-89-6	100
Lead (Pb)	7439-92-1	150
Magnesium (Mg)	7439-95-4	500
Manganese (Mn)	7439-96-5	10
Molybdenum (Mo)	7439-98-7	50
Nickel (Ni)	7440-02-0	50
Potassium (K)	7723-14-0	5000
Selenium (Se)	7782-49-2	250
Silica (SiO_2)	7637-86-9	500
Silver (Ag)	7440-22-4	10
Sodium (Na)	7440-23-5	500
Strontium (Sr)	7440-28-6	5
Thallium (Tl)	7440-28-0	500
Tin (Sn)	7440-31-5	100
Titanium (Ti)	7440-32-6	10
Vanadium (V)	7440-62-2	20
Zinc (Zn)	7440-66-6	20

1.2 Dissolved elements are determined after suitable filtration and acid preservation. In order to reduce potential interferences, dissolved solids should not exceed 0.2% (w/v).

1.3 Where this method is approved for the determination of metal and metalloid contaminants in drinking water, samples are analyzed directly by pneumatic nebulization without acid digestion if the samples have been properly acid-preserved and have turbidity of < 1 NTU at the time of analysis. This total recoverable determination procedure is referred to as "direct analysis". Note the exception for silver discussed in Section 1.6.

1.4 For the determination of total recoverable analytes in aqueous samples containing particulate and suspended solids a digestion step is required prior to analysis. Aqueous samples containing suspended or particulate material ≥ 1% should be digested as a solid sample (Region 9 Laboratory SOP 405).

1.5 When determining boron in aqueous samples, only plastic, PTFE or quartz labware should be used from time of collection to completion of analysis. When possible, borosilicate glass should be avoided to prevent contamination of boron.

1.6 Silver is only slightly soluble in the presence of chloride unless there is a sufficient chloride concentration to form the soluble chloride complex. Therefore, low recoveries of silver may occur in samples, fortified sample matrices and even fortified blanks if determined as a dissolved analyte or by "direct analysis" where the sample has not been processed using the total recoverable mixed acid digestion. For this reason samples are digested prior to the determination of silver. The total recoverable sample digestion procedure is suitable for the determination of silver in aqueous samples containing concentrations up to 0.1 mg/L. For the analysis of wastewater samples containing higher concentrations of silver, succeeding smaller volume, well mixed sample aliquots must be digested until the analysis solution contains < 0.1 mg/L silver.

1.7 The total recoverable sample digestion procedure given in Region 9 Laboratory SOP 403 will solubilize and hold in solution only minimal concentrations of barium in the presence of free sulfate. For the analysis of barium in samples having varying and unknown concentrations of sulfate, analysis should be completed as soon as possible after sample preparation.

2 METHOD SUMMARY

2.1 An aliquot of a well-mixed, homogeneous aqueous sample is accurately measured for sample processing. For total recoverable analysis of an aqueous sample containing undissolved material, analytes are first solubilized by gentle refluxing with nitric and hydrochloric acids. After cooling, the sample is made up to volume, mixed and allowed to settle overnight prior to analysis. For the determination of dissolved analytes in a filtered aqueous sample aliquot, or for the "direct analysis"

total recoverable determination of analytes in drinking water where sample turbidity is <1 NTU, the sample is made ready for analysis by the appropriate addition of nitric acid, and then mixed before analysis.

2.2 The method describes the multi-elemental determination of trace elements in aqueous solutions by ICP-AES using a simultaneous instrument. The instrument measures the characteristic atomic-line emission spectra by optical spectrometry. Samples are nebulized and the resulting aerosol is transported to the plasma torch. Element specific emission spectra are produced by a radio-frequency inductively coupled plasma. The spectra are dispersed by a grating spectrometer, and the intensities of the line spectra are monitored at specific wavelengths by a photosensitive device. Photo currents from the photosensitive device are processed and controlled by a computer system. A background correction technique is required to compensate for variable background contribution to the determination of the analytes. Background must be measured adjacent to the analyte wavelength during analysis.

3 DEFINITIONS

3.1 Analytical Sample - Any solution introduced into the ICP-AES instrument excluding calibration standards, calibration blanks, or instrument performance check samples.

3.2 Calibration Blank (CB) - A volume of reagent water acidified with the same acid matrix as in the calibration standards. The calibration blank is a zero standard and is used to calibrate the ICP-AES instrument.

3.3 Calibration Standard (CAL) - A solution prepared from the dilution of stock standard solutions. The CAL solutions are used to calibrate the instrument response with respect to analyte concentration.

3.4 Dissolved Analyte Concentration - The concentration of analyte in an aqueous sample that is filtered through a 0.45- m membrane filter assembly prior to sample acidification.

3.5 Field Duplicates (FD) - Two separate samples collected at the same time and place under identical circumstances and treated exactly the same throughout field and laboratory procedures. Analyses of field duplicates indicate the precision associated with sample collection and storage as well as with laboratory procedures.

3.6 Field Reagent Blank (FRB) - An aliquot of reagent water or other blank matrix that is placed in a sample container in the laboratory and treated as a sample in all respects, including shipment to the sampling site, exposure to the sampling site conditions, storage, preservation, and all analytical procedures. The purposes of the FRB is to determine if method analytes or other interferences are present in the field environment. Note:Field reagent blanks cannot be used for LFM or LFMD analyses

3.7 Instrument Performance Check Solution (IPC) - A solution containing method analytes used to evaluate the performance of the instrument system with respect to a defined set of criteria.

3.8 Laboratory Fortified Blank (LFB) - An aliquot of LRB to which known quantities of the method analytes are added. The LFB is analyzed exactly like a sample, and its purpose is to determine whether the methodology is in control and whether the laboratory is capable of making accurate and precise measurements.

3.9 Laboratory Fortified Sample Matrix (LFM) - An aliquot of an environmental sample to which known quantities of the method analytes are added. The LFM is analyzed exactly like a sample. The LFM results are compared to the results for the un-fortified sample to determine whether the sample matrix contributes bias to the analytical results.

3.10 Laboratory Fortified Matrix Duplicate (LFMD) - A duplicate aliquot of an analytical sample to which known quantities of the method analyte is added in the laboratory. The LFMD is analyzed exactly like a sample, and its purpose is to determine whether the sample matrix contributes bias to the analytical results and to determine laboratory precision.

3.11 Laboratory Reagent Blank (LRB) - An aliquot of reagent water or other blank matrix that is treated exactly as a sample. The LRB is used to detect sample contamination resulting from the procedures used to prepare and analyze the samples in the laboratory environment.

3.12 Linear Dynamic Range (LDR) - The concentration range over which the instrument response to an analyte is linear.

3.13 Method Detection Limit (MDL) - The minimum concentration of an analyte in an environmental sample that can be identified, measured, and reported with 99% confidence that the analyte concentration is greater than zero.

3.14 Quality Control Sample (QCS) - A solution containing known concentrations of method analytes. The QCS source must be different than the source of calibration standards. It is used to check laboratory or instrument performance.

3.15 Quantitation Limit (QL) - The concentration at which confidence in the reported value requires no qualifying remarks. A standard is run at the QL to verify acceptable data quality.

3.16 Spectral Interference Check (SIC) Solution - A solution of selected method analytes of higher concentration which is used to evaluate the procedural routine for correcting known interelement spectral interferences with respect to a defined set of method criteria.

3.17 Sample Delivery Group (SDG) - A group of twenty samples or less from a project that is sent to the laboratory for analysis.

3.18 Stock Standard Solution (SSS) - A concentrated solution containing one or more method analytes prepared in the laboratory using assayed reference materials or purchased from a reputable commercial source.

3.19 Total Recoverable Analyte Concentration - The concentration of analyte in either a solid sample or an unfiltered aqueous sample after preparation by acid digestion. Refer to Region 9 Laboratory SOPs 405 and 403 for the sample preparation procedures.

3.20 Water Sample - For the purpose of this method, a sample taken from matrices classified as drinking, surface, ground, or storm runoff water, or industrial or domestic wastewater.

4 HEALTH AND SAFETY

4.1 The toxicity or carcinogenicity of reagents used in this method have not been fully established. Each chemical should be regarded as a potential health hazard and exposure to these compounds should be as low as reasonably achievable. Concentrated nitric and hydrochloric acids present various hazards and according to MSDS may be fatal and extremely irritating to skin and mucus membranes. Use these reagents in a fume hood whenever possible and if eye or skin contact occurs, flush with large amounts of water for at least 15 minutes or if inhalation occurs, remove to fresh air. ESAT personnel should contact the Group Leader or Health and Safety and Env. Compliance Task Manager and EPA staff should see the Team Leader or the Laboratory Safety, Health and Environmental Compliance Manager to determine if additional treatment is required.

4.2 Always wear safety glasses or a shield for eye protection, protective clothing and observe proper mixing when working with these reagents. Refer to the Material Safety Data Sheets located in the library and Room 413 for additional information.

4.3 The acidification of samples containing reactive materials may result in the release of toxic gases, such as cyanides or sulfides. Acidification of samples should be done in a fume hood.

4.4 The ICP-AES emits radio-frequency and intense UV radiation. Personnel should not stand near the plasma while the ICP is in operation.

4.5 Areas of high, lethal voltages exist within the instrument. Never touch parts of the instrument which are not intended for access by the instrument operator.

5 SAMPLE HANDLING AND PRESERVATION

5.1 Samples are received at the Region 9 Laboratory by EPA staff in Room 503. Preservation and pretreatment of samples are verified against the chain-of-custody form and analytical request as follows:

5.1.1 Dissolved Analyte Samples: The samples must be filtered through a 0.45- m pore diameter membrane filter at the time of collection or as soon thereafter as practically possible. (Glass or plastic filtering apparatus are recommended to avoid contamination). The laboratory must perform filtration immediately if the step was not performed in the field. Acidify the filtrate to pH<2 with (1+1) nitric acid immediately following filtration (normally, 3 mL of (1+1) nitric acid per liter of sample is sufficient).

5.1.2 Aqueous Total Recoverable Analyte Samples: Samples are preserved by acidifying with (1+1) nitric acid to pH<2 (normally, 3 mL of (1+1) nitric acid per liter of sample is sufficient). Preservation may be done at the time of collection. However, to avoid the hazards of strong acids in the field, transport restrictions and possible contamination, samples may be shipped to the laboratory within two weeks of collection and preserved upon receipt in the laboratory. Following acidification, the sample is mixed and held for sixteen hours, and then verified to be pH<2 just prior to withdrawing an aliquot for digestion or "direct analysis." If the sample pH >2, more acid must be added and the sample held for sixteen hours until verified to be pH<2.

5.1.3 Drinking Water Samples: Samples are preserved by acidifying with (1+1) nitric acid to pH<2 (normally, 3 mL of (1+1) nitric acid per liter of sample is sufficient). Preservation may be done at the time of collection. However, to avoid the hazards of strong acids in the field, transport restrictions and possible contamination, samples may be shipped to the laboratory within two weeks of collection and preserved upon receipt in the laboratory. Following acidification, the sample is mixed and held for sixteen hours, and then verified to be pH<2 just prior to withdrawing an aliquot for turbidity measurement. If the sample turbidity <1 NTU, the sample can be analyzed directly without digestion.

5.2 The holding time for properly preserved samples is six months.

6 INTERFERENCES

6.1 Spectral interferences are caused by background emission from continuous or recombination phenomena, stray light from the line emission of high concentration elements, overlap of a spectral line from another element, or the unresolved overlap of molecular band spectra.

6.1.1 Background emission and stray light can usually be compensated for by subtracting the background emission determined by measurement(s) adjacent to the analyte wavelength peak. The location(s) used for the routine measurements must be free of off-line spectral interferences (interelement or molecular) or adequately corrected to reflect the same change in background intensity that occurs at the wavelength peak.

6.1.2 Spectral overlaps can be compensated for by equations that correct for the inter-element contributions, which involves measuring the interfering elements. When present and uncorrected, these interferences will produce false-positive results and be reported as analyte concentrations.

6.1.3 When interelement corrections are applied, there is a need to verify their accuracy by analyzing spectral interference check solutions. Interelement corrections will vary for the same emission line among instruments because of differences in resolution, as determined by the grating plus the entrance and exit slit widths, and by the order of dispersion. Interelement corrections will also vary depending upon the choice of background correction points. Selecting a point where an interfering emission line may appear should be avoided when practical. Interelement corrections that constitute a major portion of an emission signal may not yield accurate data. It should not be forgotten that some samples may contain uncommon elements that could contribute spectral interferences.

6.1.4 The interference effects must be evaluated for each individual instrument. Intensities will vary not only with the optical resolution but also with the operating conditions (such as power, viewing height and argon flow). The Region 9 Laboratory has determined and documented for each wavelength the effect from the known interferences given in Table 1, and utilizes a computer routine for their automatic correction on all analysis. To determine the appropriate location for the off-line background correction, the user must scan the area on either side adjacent to the wavelength and record the apparent emission intensity from all other method analytes. This spectral information must be documented and kept on file. The location selected for background correction must be either free of off-line interelement spectral interference or a computer routine must be used for their automatic correction on all determinations. If a wavelength other than the recommended wavelength is used, the user must determine and document both the on-line and off-line spectral interference effect from all method analytes and provide for their automatic correction on all analyses. Tests to determine the spectral interference must be done using analyte concentrations that will adequately describe the interference. Normally, 100 mg/L single element solutions are sufficient, however, for analytes such as iron that may be found at high concentration a more appropriate test would be to use a concentration near the upper LDR limit.

6.1.5 When interelement corrections are **not** used, the on-going SIC solutions (Sect. 7.2.13) must be analyzed to verify the absence of inter-element spectral interference. When the interference accounts for 10% or more of the analyte concentration, another approved test procedure must be used to complete the analysis. Users should be aware that, depending upon the instrumental resolution, alternate wavelengths with adequate sensitivity and freedom from interference may not be available for all matrices. In these circumstances the analyte must be determined using another approved test procedure.

6.2 Physical interferences are effects associated with the sample nebulization and transport processes. Changes in viscosity and surface tension can cause significant inaccuracies, especially in samples that contain high dissolved solids or high acid concentrations. If physical interferences are present, they must be reduced by such means as high solids nebulizer, diluting the sample, and using a peristaltic pump. Another problem that can occur is salt buildup at the tip of the nebulizer, which affects the aerosol rate and causes instrument drift. This problem can be controlled by a high solids nebulizer, wetting the argon prior to nebulization, using a tip washer, or diluting the sample.

6.3 Chemical interferences include molecular-compound formation, ionization effects, and solute-vaporization effects. Normally, these effects are not significant with the ICP-AES technique. If observed, they can be minimized by careful selection of operating conditions (such as incident power and observation height), by buffering the sample, by matrix matching, and by standard addition procedures. Chemical interferences are highly dependant on matrix type and the specific analyte element.

6.4 Memory Interference - Memory interferences are related to sample transport and result when there is carryover from one sample to the next. Sample carryover can result from sample deposition on the uptake tubing to the nebulizer, and from incomplete rinsing of the sample solution from the plasma torch and the spray chamber between samples. These memory effects are dependent upon both the analyte being measured and sample matrix and are minimized through the use of extended rinse times.

7 APPARATUS AND MATERIALS

7.1 Apparatus

Note: All reusable labware (glass, quartz, polyethylene, PTFE, FEP, etc.) should be sufficiently clean for the task objectives and isolated from other laboratory glassware. Please refer to Region 9 Laboratory SOP 130, Glassware Cleaning Procedures, for specific instructions (reference 11.2).

7.1.1 ICP-AES System, comprised of following: Thermo Jarrell Ash Inductively Coupled Plasma-Atomic Emission Spectrometer Thermo Jarrell Ash Autosampler
7.1.2 Argon gas supply (high-purity grade, 99.99%)
7.1.3 Analytical balance, with capability to measure to 0.1 mg.
7.1.4 Class "S" weights.
7.1.5 Hot plate, variable temperature, capable of maintaining a temperature of 85 $\pm$5°C.
7.1.6 Pipetters, capable of delivering volumes ranging from 10 to 1000 L, and associated metal-free disposable pipet tips.
7.1.7 Syringe with 0.45um Whatman disk filters.
7.1.8 Glassware - Class A volumetric flasks, graduated cylinders and funnels (glass and/or metal-free plastic).
7.1.9 Class A volumetric pipettes.
7.1.10 150-mL Teflon beakers, 50-mm Teflon watch glasses.
7.1.11 Narrow-mouth storage bottles, LDPE with screw closure, 125-mL to 1-L capacities.
7.1.12 One-piece stem FEP wash bottle with screw closure, 500-mL capacity.

7.2 Materials and Reagents

Reagents may contain elemental impurities which might affect analytical data. Only high-purity reagents that conform to the American Chemical Society (ACS) specifications should be used. If the purity of a reagent is in question, analyze for contamination. Record all standard and reagent preparations in the Inorganic Standards and Reagents Preparation Log Book (Attachment B).

7.2.1 Reagent water - All references to water in this method refer to ASTM Type II grade water.
7.2.2 Hydrochloric acid, (HCl) concentrated (sp.gr. 1.19) - trace metals grade or better.
7.2.3 Hydrochloric acid (1+1) - Add 500 mL concentrated HCl to 400 mL reagent water and dilute to 1 L.
7.2.4 Nitric acid, (HNO_3) concentrated (sp.gr. 1.41) - trace metals grade or better.
7.2.5 Nitric acid (1+1) - Add 500 mL concentrated HNO_3 to 400 mL reagent water and dilute to 1L.
7.2.6 Standard stock solutions (1000 g/mL) can be purchased from a commercial supplier such as Spex or Inorganic Ventures. The list of elements required for this method is provided in Section 1.1.

7.2.7 Calibration Standards - Calibration stock standard solutions are normally purchased from Inorganic Ventures and the final concentrations are listed in Table 2. Each calibration solution is prepared by an appropriate amount of the calibration stock standard to 200 mL with 2% (v/v) nitric acid/2% (v/v) hydrochloric acid.

7.2.8 Calibration Blank (CB) - Dilute concentrated nitric acid and hydrochloric acid with reagent water to obtain a 2% (v/v) nitric acid/2%(v/v) hydrochloric acid solution.

7.2.9 Laboratory Fortified Blank (LFB) and Laboratory Fortified Matrix (LFM) Spiking Solution - Region 9 Laboratory uses Inorganic Ventures Laboratory Fortifying Stock Solutions WW-LFS-1 (contains Al, As, Ba, Be, B, Cd, Ca, Ce, Cr, Co, Cu, Fe, Pb, Mg, Mn, Ni, K, Se, Ag, Na, Sr, Tl, V and Zn) and WW-LFS-2 (contains Sb, Mo,SiO_2, Sn and Ti). The LFB is prepared by spiking 1.0 mL each of the two spiking solutions into 100 mL reagent water and adding the appropriate acids. The LFM and LFMD are prepared by spiking 1.0 mL each of the two spiking solutions into 100 mL of the designated LFM and LFMD samples and adding the appropriate acids. The final concentrations for the LFB and LFM/LFMD are listed in Table 3.

7.2.10 Rinse Blank - Dilute concentrated nitric acid and hydrochloric acid with reagent water to obtain a 2% (v/v) nitric acid/2% (v/v) hydrochloric acid solution.

7.2.11 Instrument Performance Check (IPC) Solution - The IPC solution is used to verify instrument performance during analysis. The IPC is normally purchased from Inorganic Ventures and consists of solution 1, part# WW-IPC-1 (containing Al, As, Ba, Be, B, Cd, Ca, Ce, Cr, Co, Cu, Fe, Pb, Mg, Mn, Ni, K, Se, Ag, Na, Sr, Tl, V and Zn) and solution 2, part# WW-IPC-2 (containing Sb,

Mo, SiO_2, Sn and Ti). The IPC is prepared by adding 5.0 mL each of the two solutions and diluting to 500 mL with 2% (v/v) nitric acid/2% (v/v) hydrochloric acid. The concentrations of the IPC are listed in Table 3.

7.2.12 Quality Control Sample (QCS) - Analysis of a QCS is required for the initial and periodic verification of the calibration standards and instrument performance. The QCS must be obtained from an outside source different from the standard stock solutions and prepared in the same acid mixture as the calibration standards. The analytes in the QCS solution should be $\geq$ 1 mg/L, except silver, which must be limited to a concentration of 0.5 mg/L for solution stability. A fresh solution should be prepared quarterly or more frequently as needed. The QCS standard is listed in Table 3.

7.2.13 Spectral Interference Check (SIC) solutions - When interelement corrections are applied, SIC solutions are needed containing concentrations of the interfering elements at levels that will provide an adequate test of the correction factors. The SIC solutions required are 200 mg/L Al, 300 mg/L Fe, 50 mg/L Ba, 10 mg/L Be, 50 mg/L Cd, 50 mg/L Ce, 50 mg/l Co, 50 mg/L Cr, 50 mg/L Cu, 50 mg/L Mn, 50 mg/L Mo, 50 mg/L Ni, 50 mg/L Sn, 50 mg/L SIO_2, 50 mg/L Ti, 50 mg/L Tl, 50 mg/L V. The SIC solutions are prepared by diluting the 1000 g/mL single element stock solutions.

7.2.14 Profile Solution - A solution of 10 mg/L copper and manganese is needed to profile the instrument prior to analysis. The solution is made by diluting 5.0 mL each of 1000 g/mL copper and manganese stock standard to 500 mL with 2% (v/v) nitric acid/2% (v/v) hydrochloric acid.

8 QUALITY CONTROL PROCEDURES

8.1 Method Characterization - Prior to routine use of this method, the LDR, MDL and spectral interferences for each analyte were determined for each operating condition, and the average of triplicate analyses of the QCS yielded acceptable results.

8.2 EPA Region 9 Laboratory operates a formal quality control (QC) program. As it relates to this SOP, the QC program consists of an initial demonstration of laboratory and analyst capability (refer to Region 9 Laboratory SOP 880), and the periodic analysis of laboratory solutions as a continuing check on performance.

8.2.1 LDR - The upper limit of the LDR must be established for each element used in quantifying results. Analyze a series of standards with concentrations spanning the range from 1 to 100 times the highest calibration standard concentration. The upper concentration factor can be adjusted by the analyst to account for detector characteristics or dissolved solids limitations/restrictions. From the analysis determine the maximum concentration for which the measured and true concentration agree within 10%. This concentration is typically defined as the upper limit of the LDR. Samples with analyte concentrations that are greater than 90% of the upper LDR limit must be diluted and reanalyzed. The LDR should be verified whenever the analytical conditions are changed.

8.2.2 MDL - A method detection limit must be confirmed annually and must be <½ the QL or corrective action must be initiated.

8.2.3 LFB - Analyze a LFB in quadruplicate and take average results to demonstrate initial acceptable performance. The average percent recovery must be ±15%.

8.2.4 SIC - The laboratory must establish and initially verify an interelemental spectral interference correction routine to be used during sample analysis. Criteria for determining an interelement spectral interference is the apparent positive or negative concentration on the analyte that is outside the limits of the calibration blank for the analyte. Once established the interferences must be verified annually, or whenever there is a change in instrument operating conditions. Only a portion of the correction routine must be verified more frequently or daily. The test criteria and the solutions are as follows:

8.2.4.1 For interferences from aluminum and iron, only those correction factors (positive or negative) when multiplied by 100 which exceed ± ½ the QL are tested daily.

8.2.4.2 For all other interfering elements, only those correction factors (positive or negative) when multiplied by 10 which exceed ± ½ the QL are tested daily.

8.2.4.3 If the correction routine is operating properly, the determined apparent analyte(s) concentration from analysis of each interfering solution should fall within a specific concentration range. The range shall be the greater of either (1) ± ½ the QL or (2) a concentration range that is calculated by multiplying the concentration of the interfering element by the value of the correction factor being tested and dividing by 10. If the apparent analyte concentration is outside the greater of the two ranges, the correction factor should be redetermined and updated prior to sample analysis.

8.2.4.4 If the nature of the samples analyzed is such that they do not contain concentrations of the interfering elements at the 10 mg/L level, daily verification is not required; however, all interelement spectral correction factors must be verified annually and updated, if necessary.

8.3 Routine Analytical Quality Control

8.3.1 Instrument performance check (IPC) solution - The laboratory must check instrument performance and verify that the instrument is properly calibrated on a continuing basis. To verify calibration, the IPC and the calibration blank are run as routine samples immediately following calibration, after every 10 analytical samples, and at the end of each run. For each analyte in the IPC, the percent recovery is calculated as follows:

$$\%R = \frac{IPC}{s} \times 100$$

where:

%R	=	percent recovery.
IPC	=	measured concentration of analyte in the IPC, mg/L.
s	=	expected analyte concentration in the IPC, mg/L.

8.3.1.1 The QC criteria for the initial IPC are 95-105% (exception: 90-110% for potassium). If the %R for any analyte in the IPC falls outside of the QC criteria, the instrument must be recalibrated for at least the out-of-control analyte. Samples cannot be analyzed for the unacceptable analyte until an acceptable IPC is analyzed.

8.3.1.2 The QC criteria for continuing IPC samples are 90 -110%. If the %R for any analyte in the IPC falls outside of the QC criteria, analysis must stop. The instrument must be recalibrated for at least the out-of-control analyte. Once an acceptable calibration is obtained, the samples preceding the out-of-control IPC must be reanalyzed for the affected analytes.

8.3.1.3 The results for analytes measured in the CBs analyzed after IPCs are compared to the QL. If the absolute value of the CB result is less than ½ the QL, the result is acceptable. If the absolute value of the CB result equals or exceeds ½ the QL, the analysis must be terminated. The cause of the high CB result must be determined and the problem corrected. The instrument must be re-calibrated at least for the out-of-control analyte and all samples not bracketed by acceptable CB results must be reanalyzed.

8.3.2 QL - The accuracy of the calibration at the quantitation limit shall be verified by the analysis of a QL standard. The QL must be analyzed at the beginning of each analytical run, immediately after the QCS. The recovery of analytes in the QL is calculated as follows:

$$\%R = \frac{M}{T} \times 100$$

Where

%R	=	percent recovery of the standard.
M	=	measured concentration of the analyte, mg/L.
T	=	true concentration of the analyte in the QL, mg/L.

If the QL recovery exceeds the limits of 50 - 150%, the analysis shall be terminated. The cause of the poor recovery must be determined and the problem corrected. The instrument must be recalibrated and all affected samples must be reanalyzed. If, after re-calibration, the QL recovery still exceeds the 50-150% limits, the calibration standards must be re-prepared and the instrument re-calibrated.

8.3.3 QCS - Analyze a QCS daily to verify the calibration standards and acceptable instrument performance. If the measured concentrations are not within 5% of the true values (exception: 10% for potassium), the method performance is unacceptable. The source of the problem must be identified and corrected before proceeding with analyses.

8.3.4 SIC - Analyze daily SIC solutions to test interelemental spectral correction factors. If the SIC solutions do not meet the test criteria given in section 8.2.4, the factor must be updated before samples are analyzed. If the affected samples do not contain concentrations of the interfering elements at the 10 mg/L level, daily verification is not required. If the affected samples contain concentrations of analyte at less than ½ the QL, daily verification is not required. If the corrected concentration of the analyte due to spectral interference is less than 10% the total analyte concentration, daily verification is not required.

8.3.5 LRB - The laboratory must analyze at least one LRB with each batch of 20 or fewer samples of the same matrix. LRB data are used to assess contamination from the laboratory environment and sample preparation reagents. LRB values that exceed the QL indicate potential laboratory or reagent contamination. If the potential contamination significantly impacts the analytical results, the LRB must be reprepared along with the affected samples, and the affected analytes reanalyzed. Unless specified otherwise, the following statement describe when samples must be reprepared:

1) If the LRB analyte concentration is ≥ the QL and the sample result is less than 5 times the LRB analyte concentration, the LRB and sample must be reprepared and reanalyzed.

8.3.6 LFB - The laboratory must analyze at least one LFB with each batch of 20 or fewer samples of the same matrix. Calculate the percent recovery for each analyte using the following equation:

$$\%R = \frac{LFB}{s} \times 100$$

Where

$\%R$	=	percent recovery.
LFB	=	measured concentration of analyte in the LFB, mg/L.
s	=	analyte concentration in the LFB, mg/L.

If the recovery falls outside the control limits of 85-115%, reanalyze once. If the recovery still falls outside the control limits of 85-115% upon re-analysis, the analyte is judged to be out-of-control, and the source of the problem must be identified and resolved. All samples associated with the out-of-control LFB must be reprepared and reanalyzed.

8.3.7 LFM - Sample homogeneity and the chemical nature of the sample matrix can affect analyte recovery and the quality of the data. LFM results can be used to assess these matrix effects and potential impact to data usability.

One LFM must be prepared for every 10 routine samples of the same matrix in a sample batch (e.g., 1 LFM for batches containing 1-10 routine samples, 2 LFMs for batches containing 11-20 routine samples, etc.). Samples identified as field blanks cannot be used for LFM sample analysis. Homogenize the routine sample selected as the LFM and spike a representative aliquot with the analytes of interest prior to any sample preparation. For aqueous samples, the spiking level is listed in Table 3. Calculate the percent recovery for each analyte using the following equation:

$$\%R = \frac{C_{lfm} - C}{s} \times 100$$

Where

$\%R$	=	percent recovery.
C_{lfm}	=	measured concentration of analyte in the LFM, corrected for sample preparation and any dilutions, mg/L.
C	=	measured concentration of analyte in the routine sample corrected for sample preparation and any dilutions, mg/L.
s	=	analyte concentration in the LFM, corrected for sample preparation and any dilutions, mg/L.

If the value of C is less than 4 times the value of s, the acceptance window for $\%R$ is 70-130%. If the recovery of any analyte falls outside the acceptance window other QC data must be examined to determine if a matrix problem exists. If the laboratory performance for that analyte is in control (i.e., the IPC, QCS, and LFB results are acceptable), the poor LFM recovery is most likely matrix related. The problem should be discussed in the report narrative and the data user informed that the result for that analyte in the unfortified sample is suspect due either to the heterogeneous nature of the sample or a matrix effect and considered to be an estimated quantity. All affected results should be flagged with a "J" on the analytical spreadsheet.

8.3.8 LFMD - Sample homogeneity can affect the quality and interpretation of the data. LFMD results can be used to assess sample homogeneity. One LFMD must be prepared for every 10 routine samples of the same matrix in a sample batch (e.g., 1 LFMD for a batch containing 1-10 routine

samples, 2 LFMDs for a batch containing 11-20 routine samples, etc.). Samples identified as field blanks cannot be used for LFMD sample analysis. Homogenize the routine sample selected as the LFMD, obtain a representative aliquot, and proceed with sample preparation and analysis, treating the LFMD sample as a routine sample. Calculate the recovery of analyte in the LFMD following the equation in Section 8.3.7 and the relative percent difference using the following equation:

$$RPD = \frac{|C_{lfmd} - C_{lfm}|}{(C_{lfmd} + C_{lfm})/2} \times 100$$

Where

RPD	=	relative percent difference.
C_{lfm}	=	measured concentration in the LFM corrected for sample preparation and any dilutions, mg/L.
C_{lfmd}	=	measured concentration in the LFMD corrected for sample preparation and any dilutions, mg/L.

The relative percent difference (RPD) must be ≤20%. If the control limits for an analyte are exceeded, flag the associated result for the analyte as estimated (J flag). Document actions in the report narrative.

9 ANALYTICAL PROCEDURES

9.1 Sample Preparation - The sample preparation procedure for water samples to be analyzed by ICP-AES is found in Region 9 Laboratory SOP 403.

9.1.1 Aqueous Samples, Dissolved Analytes - For the determination of dissolved analytes in ground and surface waters, pipet a 20mL aliquot of the filtered, acid preserved sample into a 50-mL polypropylene centrifuge tube. Add 0.40 mL (1+1) nitric acid to adjust the acid concentration to 1% (v/v). The sample is now ready for analysis.

Note: If a precipitate is formed during acidification, transport, or storage, the sample aliquot must be digested using the procedure in Region 9 Laboratory SOP 403 prior to analysis.

9.1.2 Drinking Water Samples, Total Recoverable Analytes, Direct Analysis - Drinking water samples with turbidity <1 NTU may be acidified and analyzed directly without digestion. Pipet a 20mL aliquot of the unfiltered, acid-preserved sample into a 50-mL polypropylene centrifuge tube. Add 0.40 mL (1+1) nitric acid to adjust the acid concentration to 1% (v/v). The sample is now ready for analysis.

Note: If a precipitate is formed during acidification, transport, or storage, the sample aliquot must be digested using the procedure in Region 9 Laboratory SOP 403 prior to analysis.

9.2 Calibration and Analysis

9.2.1 Instrument Set-up - Check the condition of the pump tubing for wear. Replace as needed. Tighten the pump tubing on the pump. Ignite the plasma and allow to stabilize for at least 30 minutes. During instrument warm up, observe the nebulizer and spray chamber for proper nebulization. Check torch for salt build up. Verify that the drain tubing is tight and check the waste container.

9.2.2 Select the appropriate method file and change the data file name to correspond to the correct day (i.e.; 10109151, indicating ICP instrument number (1), present date (year/month/day), and analytical run number(1)). Check the flush times and change to desired time, minimally 60 seconds. Save all changes.

9.2.3 Set up the autosampler table with the desired sample run. Old autosampler files may be written over and resaved. Print the autosampler file and place the standards and samples in the racks as indicated by autosampler file and enter into the Run Log (Attachment C).

9.2.4 The Profile procedure is to align the optical path of the instrument prior to calibration and sample analysis. Profile the instrument using the 10 mg/L Cu/Mn solution. Aspirate the profile solution and run the profile routine as per the manufacturer's procedure. Adjust the profile position with the profile adjustment knob. Repeat the procedure until the profile peak position is ± 0.05 as indicated by the profile plot observed on the computer monitor. Print the acceptable profile plot.

9.2.5 Calibration - A calibration blank and a calibration standard are used for calibration (the standard is obtained from mixed calibration standard in different solutions). The calibration standards are given in Table 2. The calibration is automatically updated in the method file as they are run.

9.2.6 Sample Analysis - After calibration the autosampler continues with the samples and QC. Load SIC solutions according to the requested analyte list. An example of a loading list for an analytical run sequence is listed in the table below:

Seq.	Desc.	Seq.	Desc.	Seq.	Desc.	Seq.	Desc.
1	IPC	13	IPC	25	IPC	37	IPC
2	CB	14	CB	26	CB	38	CB
3	QCS	15	LRB	27	S7	39	S15
4	QL	16	LFB	28	S8	40	S16
5	Fe SIC	17	S1	29	S9	41	S17
6	Al SIC	18	S1-LFM	30	S10	42	S18
7	V SIC	19	S1-LFMD	31	S11	43	S19
8	Mn SIC	20	S2	32	S12	44	S20
9	Cr SIC	21	S3	33	S12-LFM	45	IPC
10	Co SIC	22	S4	34	S12-LFMD	46	CB
11	Ni SIC	23	S5	35	S13	47	
12	Ce SIC	24	S6	36	S14	48	

9.2.7 Review results for QC compliance and off-scale results. Identify samples which must be re-analyzed in a different analytical run. Samples having analytes at concentrations higher than 90% of the linear dynamic range must be diluted into range and re-analyzed.

9.3 Data Reduction and Reporting - After set-up and calibration the instrument reports results for the analyzed solution in the units of mg/L. The instrument calculations include elemental correction calculations and calibration factors.

9.3.1 Aqueous Samples - Data for aqueous samples should be reported in units of g/L using the following calculation:

$$C = M \times \frac{1000ug}{mg} \times D$$

Where

C = final reported concentration, in *u*g/L.

M = measured concentration reported by instrument, in mg/L.

D = sample analysis dilution factor, to account for any dilution performed after sample preparation.

9.3.2 All results should be reported using no more than two significant figures; however, no values of less significance than the QL may be reported (values near the QL will be reported with only one significant figure). Report down to ½ the QL. Values between ½ the QL and the QL will be flagged as estimated (J flag). For rounding results, adhere to the following rules:

- If the number following those to be retained is less than 5, round down;
- If the number following those to be retained is greater than 5, round up; or
- If the number following the last digit to be retained is equal to 5, round down if the digit is even, or round up if the digit is odd.

10 DOCUMENTATION

10.1 Acid Digestion Log for Metals Preparation - A copy of the acid digestion log for metals digestion must be submitted with the raw data. The digestion log is maintained in Room 302.

10.2 MET-1 TJA ICAP 61E Run Log - Entries are made for the case number, SDG number, date of analysis, site name, file name, analyst initials, lab sample IDs, client sample IDs, and comments, if any. The run log is maintained in Room 303. (Attachment C)

10.3 Inorganic Standards and Reagents Preparation Log Book - Copies of all standard solution preparation entries (CAL, IPC, QL, LFB, LFM, LFMD, QCS, etc.) must be submitted with each data package. (Attachment B)

10.4 Report Narrative and Deliverable

The data package consists of the report narrative, reports, and data, as listed in the table below.

Data Package Contents
Report Narrative: Discusses any problems encountered, both technical and administrative, the corrective action taken, and the resolution. All universal analytical flags should also be discussed in the report narrative.
Tabulated sample results: On an analytical spreadsheet, with units, sample collection dates, client sample IDs, laboratory IDs and station locations. (Attachment D)
LRB data: Included on the analytical spreadsheet. (Attachment D)
LFM and LFMD results: On a QC summary report with calculated relative percent difference (RPD). (Attachment E)
LFM, LFMD and LFB results: On a QC summary report with calculated percent recoveries (%R). (Attachment F)
Raw sample, standard and QC data, including run logs and any work sheets, if applicable. (Attachments B, C and D)

11 REFERENCES

11.1 U.S. Environmental Protection Agency. Method 200.7, Determination of Trace Elements by in Waters and Wastes by Inductively Coupled Plasma - Atomic Emission Spectrometry, Revision 4.4, EMMC Version, May 1994

11.2 Region 9 SOP 130, *Glassware Cleaning Procedures.*

11.3 Region 9 SOP 462, *Analysis of Total Suspended Solids By EPA Method 160.2.*

11.4 Region 9 SOP 830, *Notification Procedures for Results Exceeding the Safe Drinking Water Act Maximum Contaminant Level.*

11.5 Region 9 SOP 840, *Notebook Documentation and Control.*

11.6 Region 9 SOP 880, *Demonstration of Laboratory Capability and Analyst Proficiency.*

Table 1
Method Analytes and Potential Interfering Elements

Analyte	Wavelength - nm	Interfering Elements
Al	308.215	Ce, Mn, Mo, V, Fe
Sb	206.838	Ce, Cr, Mo, Ni, Ti, V, Sn, Fe, Zn
As	193.696	Al, Ce, Cr, Fe, Mo, Ni, V
Ba	493.409	Sr, Ce, Fe
Be	313.042	Ce, Mo, Ti, V
B	249.678	Fe, Co
Cd	226.502	Ce, Co, Fe, Mo, Ti, Ni
Ca	317.933*	Mn, Mo, V, Cr
Cr	267.716*	Cd, Ce, Mn, Mo, Ti, V
Co	228.616	Cd, Ce, Cr, Ba, Mo, Ti, Ni, Fe
Cu	324.754	Ce, Mo, Ti, V, Fe
Fe	259.940	Mn, Mo
Pb	220.353	Al, Ce, Co, Fe, Mo, Ti
Mg	279.079*	Ce, Co, Mn, Mo, Ti, V
Mn	257.610	Al, Ce, Mo, V, Mg
Mo	202.030*	Fe
Ni	231.604	Tl, Sb
K	766.491	None
Se	196.026	Ce
SiO_2	288.158	Ce, Cr, V
Ag	328.068	Ce, Mn, Mo, Ti, V
Na	588.995	None
Sr	421.553	None
Tl	190.894	Ce, Co, V, Ti
Sn	189.989	Ti
Ti	334.941	Ce, Cr
V	292.402	Ce, Cr, Mo, Fe, Ti, Mn
Zn	213.856	Co, Cu, Mo, Ni, Ti, V, Fe

* Wavelengths other than those recommended by Method 200.7

Attachment C
MET-1 TJA ICAP 61E Run Log

MET-1 : TJA ICAP 61E RUN LOG

Run/File Name:_____ Date:_____ Analyst:_____
Site ID:_____ Page_____ of_____
Case #:_____ SDG:_____ Cu Profile:_____

#	STD Sample ID	Comments	#	STD Sample ID	Comments

EPA REGION 9 LABORATORY
Reviewed by:_____ Date:_____

MET1.wk4 REVISED: 11/97

Attachment D
Analytical Spreadsheet

EPA REGION 9 LABORATORY-RICHMOND, CA
SUMMARY OF ANALYTICAL RESULTS

Case Number: R01S20
Site: AAAZZZ
SDG: 123456A
Date: 02/01/01

Analysis: Metals
Matrix: Water

Sample No.	N/A				N/A				LRB-1				Quantitation
Sample I.D.	DUMMY				DUMMY				Reagent Blank				Limit
Date of Collection	01/23/01				01/24/01				N/A				N/A
Units	ug/L				ug/L				ug/L				ug/L
Analyte	Result		Q	Com	Result		Q	Com	Result		Q	Com	Result
Aluminum (200.7)	200	U			200	U			200	U			200
Antimony (200.8)	5	U			5	U			5	U			1
Arsenic (200.8)	20				20	U			20	U			5
Barium (200.8)	100				5	U			5	U			1
Beryllium (200.7)	1	U			1	U			1	U			1
Boron (200.7)	400				100	U			100	U			100
Cadmium (200.8)	5	U			5	U			5	U			1
Calcium (200.7)	80000				100	U			100	U			100
Chromium (200.7)	10	U			10	U			10	U			10
Cobalt (200.8)	5	U			5	U			5	U			1
Copper (200.8)	6				5	U			5	U			1
Iron (200.7)	100				100	U			100	U			100
Lead (200.8)	5	U			5	U			5	U			1
Magnesium (200.7)	30000				500	U			500	U			500
Manganese (200.8)	4		J	A	5	U			5	U			1
Mercury (245.1)									0.03	U			0.03
Molybdenum (200.8)	5	U			5	U			5	U			1
Nickel (200.7)	50	U			50	U			50	U			50
Potassium (200.7)	6000				5000	U			5000	U			5000
Selenium (200.8)	20	U			20	U			20	U			5
Silver (200.8)	5	U			5	U			5	U			1
Sodium (200.7)	240000				500	U			500	U			500
Thallium (200.8)	5	U			5	U			5	U			1
Vanadium (200.7)	20	U			20	U			20	U			20
Zinc (200.8)	120				20	U			20	U			5

Com - Comments refer to the corresponding section in the report narrative for each letter.

N/A - Not Applicable.

N/R - Not Required.

Q - Refer to data qualifiers.

U - The parameter was analyzed for, but was not detected. The associated value is the sample quantitation limit, adjusted for dilution, if any.

J - The associated value is an estimated quantity.

Filename: METSPDSHT.123

Attachment E
QC Summary Report

US E.P.A.
REGION 9 LABORATORY
June 20, 2000
Case Number: R00SXX
SDG: 00XXXA

Laboratory Fortified Matrix and Laboratory Fortified Matrix Duplicate

Analyzed Date	Sample ID	Analyte (Analysis)	LFM Result (ug/L)	LFMD Result (ug/L)	RPD	Q
01/01/01	AB00001	Aluminum (200.7)			??	
01/01/01	AB00001	Antimony (200.8)			??	
01/01/01	AB00001	Arsenic (200.8)			??	
01/01/01	AB00001	Barium (200.8)			??	
01/01/01	AB00001	Beryllium (200.7)			??	
01/01/01	AB00001	Boron (200.7)			??	
01/01/01	AB00001	Cadmium (200.8)			??	
01/01/01	AB00001	Calcium (200.7)			??	
01/01/01	AB00001	Chromium (200.7)			??	
01/01/01	AB00001	Cobalt (200.8)			??	
01/01/01	AB00001	Copper (200.8)			??	
01/01/01	AB00001	Iron (200.7)			??	
01/01/01	AB00001	Lead (200.8)			??	
01/01/01	AB00001	Magnesium (200.7)			??	
01/01/01	AB00001	Manganese (200.8)			??	
01/01/01	AB00001	Mercury (245.1)			??	
01/01/01	AB00001	Molybdenum (200.8)			??	
01/01/01	AB00001	Nickel (200.7)			??	
01/01/01	AB00001	Potassium (200.7)			??	
01/01/01	AB00001	Selenium (200.8)			??	
01/01/01	AB00001	Silver (200.8)			??	
01/01/01	AB00001	Sodium (200.7)			??	
01/01/01	AB00001	Thallium (200.8)			??	
01/01/01	AB00001	Vanadium (200.7)			??	
01/01/01	AB00001	Zinc (200.8)			??	

USEPA REGION 9 LABORATORY
RICHMOND, CALIFORNIA

STANDARD OPERATING PROCEDURE 507

DETERMINATION OF TRACE ELEMENTS BY INDUCTIVELY COUPLED PLASMA - MASS SPECTROMETRY EPA METHOD 200.8

Prepared by:

Stephen Carroll, ESAT Region 9, ICF Consulting — Date

Review by:

Richard Bauer, Chemistry Team Leader — Date

Approved by:

Brenda Bettencourt, Laboratory Director — Date

Periodic Review:

Signature	Title	Date

STANDARD OPERATING PROCEDURE 507

DETERMINATION OF TRACE ELEMENTS BY INDUCTIVELY COUPLED PLASMA - MASS SPECTROMETRY EPA METHOD 200.8

This SOP was prepared by ICF Consulting for the United States Environmental Protection Agency (USEPA) under the Environmental Services Assistance Team (ESAT) contract (EPA contract No. 68-W-01-028).

APPROVED BY:

Osellie Salvador, Inorganic Group Leader	Date
Surender Kaushik, QA Task Manager	Date
Jerry Vail, ESAT Program Manager	Date

ESAT Document Control Number: B0101029-0485

CONTENTS

1 SCOPE AND APPLICATION 4

2 METHOD SUMMARY 5

3 DEFINITIONS 6

4 HEALTH AND SAFETY 8

5 SAMPLE HANDLING AND PRESERVATION 9

6 INTERFERENCES 9

7 APPARATUS AND MATERIALS 11

8 QUALITY CONTROL PROCEDURES 13

9 ANALYTICAL PROCEDURES 18

10 DOCUMENTATION 21

11 REFERENCES 22

Table 1: Internal Standards And Limitations of Use 23

Table 2: Recommended Elemental Equations for Data Calculations 24

Table 3: Recommended Analytical Isotopes and Additional Masses Which Must Be Monitored 25

Attachment A - Deviations From Reference Method
Attachment B - Inorganic Standards and Reagents Preparation Log Book
Attachment C - ICP-MS Runlog
Attachment D - Analytical Spreadsheet
Attachment E - QC Summary

1 SCOPE AND APPLICATION

1.1 This SOP provides procedures for the determination of dissolved and total recoverable elements by Inductively Coupled Plasma - Mass Spectrometry (ICP-MS) in environmental samples for use in the USEPA Region 9 Laboratory, Richmond, CA. It is applicable to ground, surface, drinking, and storm runoff water samples; industrial and domestic waste waters. This SOP is based on EPA Method 200.8 (Rev. 5.4, May 1994). This SOP is applicable to the determination of the following elements:

Analyte	Chemical Abstract Services Registry Number (CAS #)
Aluminum (Al)	7429-90-5
Antimony (Sb)	7440-36-0
Arsenic (As)	7440-38-2
Barium (Ba)	7440-39-3
Beryllium (Be)	7440-41-7
Cadmium (Cd)	7440-43-9
Chromium (Cr)	7440-47-3
Cobalt (Co)	7440-48-4
Copper (Cu)	7440-50-8
Lead (Pb)	7439-92-1
Manganese (Mn)	7439-96-5
Molybdenum (Mo)	7439-98-7
Nickel (Ni)	7440-02-0
Selenium (Se)	7782-49-2
Silver (Ag)	7440-22-4
Thallium (Tl)	7440-28-0
Thorium (Th)	7440-29-1
Uranium (U)	7440-61-1
Vanadium (V)	7440-62-2
Zinc (Zn)	7440-66-6

1.2 For reference where this method is approved for use in compliance monitoring programs [e.g., Clean Water Act (NPDES) or Safe Drinking Water Act (SDWA)] consult both the appropriate sections of the Code of Federal Regulations (40 CFR Part 136 Table 1B for NPDES, and Part 141 § 141.23 for drinking water), and the latest Federal Register announcements.

1.3 Dissolved elements are determined after suitable filtration and acid preservation. In order to reduce potential interferences, dissolved solids should not exceed 0.2% (w/v) (Section 6.4).

1.4 Where this method is approved for the determination of metal and metalloid contaminants in drinking water, samples are analyzed directly by pneumatic nebulization without acid digestion if the samples have been properly acid-preserved and have turbidity of < 1 NTU at the time of analysis. This total recoverable determination procedure is referred to as "direct analysis". Note the exception for silver discussed in Section 1.6.

1.5 For the determination of total recoverable analytes in aqueous samples containing particulate and suspended solids a digestion step is required prior to analysis.

1.6 Silver is only slightly soluble in the presence of chloride unless there is a sufficient chloride concentration to form the soluble chloride complex. Therefore, low recoveries of silver may occur in samples, fortified sample matrices and even fortified blanks if determined as a dissolved analyte or by "direct analysis" where the sample has not been processed using the total recoverable mixed acid digestion. For this reason samples are digested prior to the determination of silver. The total recoverable sample digestion procedure is suitable for the determination of silver in aqueous samples containing concentrations up to 0.1 mg/L. For the analysis of wastewater samples containing higher concentrations of silver, succeeding smaller volume, well mixed sample aliquots must be prepared until the analysis solution contains < 0.1 mg/L silver.

1.7 The total recoverable sample digestion procedure given in Region 9 Laboratory SOP 403 will solubilize and hold in solution only minimal concentrations of barium in the presence of free sulfate. For the analysis of barium in samples having varying and unknown concentrations of sulfate, analysis should be completed as soon as possible after sample preparation.

2 METHOD SUMMARY

2.1 An aliquot of a well-mixed, homogeneous aqueous sample is accurately measured for sample processing. For total recoverable analysis of an aqueous sample containing undissolved material, analytes are first solubilized by gentle refluxing with nitric and hydrochloric acids. After cooling, the sample is made up to volume, mixed and allowed to settle overnight prior to analysis. For the determination of dissolved analytes in a filtered aqueous sample aliquot, or for the "direct analysis" total recoverable determination of analytes in drinking water where sample turbidity is <1 NTU, the sample is made ready for analysis by the appropriate addition of nitric acid, and then mixed before analysis.

2.2 The method describes the determination of trace elements in aqueous solutions by ICP-MS. Sample solutions are introduced by pneumatic nebulization into a plasma, in which desolvation, atomization and ionization occurs. Ions are extracted from the plasma through a differentially pumped vacuum interface and separated on the basis of their mass-to-charge ratio by a quadrupole mass spectrometer. The ions transmitted through the quadrupole are detected by an electron multiplier. Ion intensities at each mass are recorded and compared to those obtained from external calibration standards to generate concentration values for the samples. Results are corrected for instrument drift and matrix effects using internal standards. Additional corrections are applied as necessary to correct for isobaric and poly-atomic elemental interferences (Section 6).

3 DEFINITIONS

3.1 Analytical Sample - Any solution introduced into the ICP-MS instrument excluding calibration standards, calibration blanks, or instrument performance check samples (e.g., tuning solution sample).

3.2 Calibration Blank (CB) - A volume of reagent water acidified with the same acid matrix as in the calibration standards. The calibration blank is a zero standard and is used to calibrate the ICP-MS instrument. In addition, the stability of the calibration curve baseline must be monitored by analyzing a CB immediately after every IPC standard.

3.3 Calibration Standard (CAL) - A solution prepared from the dilution of stock standard solutions. The CAL solutions are used to calibrate the instrument response with respect to analyte concentration.

3.4 Dissolved Analyte Concentration - The concentration of analyte in an aqueous sample that is filtered through a 0.45- m membrane filter assembly prior to sample acidification.

3.5 Field Duplicates (FD) - Two separate samples collected at the same time and place under identical circumstances and treated exactly the same throughout field and laboratory procedures. Analyses of field duplicates indicate the precision associated with sample collection and storage as well as with laboratory procedures.

3.6 Field Reagent Blank (FRB) - An aliquot of reagent water or other blank matrix that is placed in a sample container in the laboratory and treated as a sample in all respects, including shipment to the sampling site, exposure to the sampling site conditions, storage, preservation, and all analytical procedures. The purposes of the FRB is to determine if method analytes or other interferences are present in the field environment. **Note:** Field reagent blanks cannot be used for LFM or LFMD analyses.

3.7 Instrument Performance Check (IPC) - A solution of method analytes used to evaluate the performance of the instrument system with respect to a defined set of criteria.

3.8 Internal Standard - An element added to all sample, extract, and standard solutions in the same known amount. Its response is measured throughout an analytical run and is used to correct for instrument drift and sample transport interferences. The internal standard should not be a sample constituent. Recommended internal standard elements are listed in Table 1.

3.9 Laboratory Fortified Blank (LFB) - An aliquot of LRB to which known quantities of the method analytes are added. The LFB is analyzed exactly like a sample, and its purpose is to determine whether the methodology is in control and whether the laboratory is capable of making accurate and precise measurements.

3.10 Laboratory Fortified Sample Matrix (LFM) - An aliquot of an environmental sample to which known quantities of the method analytes are added. The LFM is analyzed exactly like a sample. The LFM results are compared to the results for the un-fortified sample to determine whether the sample matrix contributes bias to the analytical results.

3.11 Laboratory Fortified Sample Matrix Duplicate (LFMD) - A duplicate aliquot of an analytical sample to which known quantities of the method analyte is added in the laboratory. The LFMD is analyzed exactly like a sample, and its purpose is to determine whether the sample matrix contributes bias to the analytical results and to determine laboratory precision.

3.12 Laboratory Reagent Blank (LRB) - An aliquot of reagent water or other blank matrix that is treated exactly as a sample. The LRB is used to detect sample contamination resulting from the procedures used to prepare and analyze the samples in the laboratory environment.

3.13 Linear Dynamic Range (LDR) - The concentration range over which the instrument response to an analyte is linear.

3.14 Method Detection Limit (MDL) - The minimum concentration of an analyte in an environmental sample that can be identified, measured, and reported with 99% confidence that the analyte concentration is greater than zero.

3.15 Quality Control Sample (QCS) - A solution containing known concentrations of method analytes. The QCS source must be different than the source of calibration standards. It is used to check laboratory or instrument performance.

3.16 Quantitation Limit (QL) - The concentration at which confidence in the reported value requires no qualifying remarks. A standard is run at the QL to verify acceptable data quality.

3.17 Sample Delivery Group (SDG) - A group of twenty samples or less from a project that is sent to the laboratory for analysis.

3.18 Stock Standard Solution - A solution containing one or more method analytes prepared in the laboratory using assayed reference materials or purchased from a commercial source. The stock standards are used to prepare the calibration standards.

3.19 Total Recoverable Analyte Concentration - The concentration of analyte in either a solid sample or an unfiltered aqueous sample after preparation by acid digestion. The sample preparation procedures are described in Region 9 Laboratory SOPs 403 and 405.

3.20 Tuning Solution - A solution contained selected elements over the entire mass range of the method. It is used to tune the mass calibration and resolution of the mass spectrometer, and to assess instrument performance prior to calibration and sample analysis.

3.21 Water Sample - For the purpose of this method, a sample taken from matrices classified as drinking, surface, ground, or storm runoff water; or industrial or domestic wastewater.

4 HEALTH AND SAFETY

4.1 The toxicity or carcinogenicity of reagents used in this method have not been fully established. Each chemical should be regarded as a potential health hazard and exposure to these compounds should be as low as reasonably achievable. Concentrated nitric and hydrochloric acids present various hazards and according to MSDS may be fatal and extremely irritating to skin and mucus membranes. Use these reagents in a fume hood whenever possible and if eye or skin contact occurs, flush with large amounts of water for at least 15 minutes or if inhalation occurs, remove to fresh air. ESAT personnel should contact the Group Leader or Health and Safety and Env. Compliance Task Manager and EPA staff should see the Team Leader or the Laboratory Safety, Health and Environmental Compliance Manager to determine if additional treatment is required.

4.2 Always wear safety glasses for eye protection (and a full face shield if large quantities of concentrated acids are being transferred), protective clothing and observe proper mixing when working with these reagents. Refer to the Material Safety Data Sheets located in the library or in Room 413 for additional information.

4.3 The acidification of samples containing reactive materials may result in the release of toxic gases, such as cyanides or sulfides. Acidification of samples should be done in a fume hood.

4.4 The ICP-MS emits radio frequency and intense UV radiation. Suitable precautions should be taken to protect personnel from such hazards.

4.5 Areas of high, lethal voltages exist within the instrument. Never touch parts of the instrument which are not intended for access by the instrument operator.

5 SAMPLE HANDLING AND PRESERVATION

5.1 Samples should be collected in pre-cleaned plastic or glass bottles. Volume collected should be sufficient to insure a representative sample, allow for replicate analysis and minimize waste disposal. A 500 mL sample volume should be sufficient to meet these objectives.

5.2 Samples are received at the Region 9 Laboratory by EPA staff in Room 503. Preservation and pretreatment of samples are verified against the chain-of-custody form and analytical request as follows:

5.2.1 Dissolved Analyte Samples: The samples must be filtered through a 0.45- m pore diameter membrane filter at the time of collection or as soon thereafter as practically possible. (Glass or plastic filtering apparatus are recommended to avoid contamination). The laboratory must perform filtration immediately if the step was not performed in the field. Acidify the filtrate with (1+1) nitric acid immediately following filtration to pH<2 (normally, 3 mL of (1+1) nitric acid per liter of sample is sufficient).

5.2.2 Aqueous Total Recoverable Analyte Samples: Samples are preserved by acidifying with (1+1) nitric acid to pH<2 (normally, 3 mL of (1+1) nitric acid per liter of sample is sufficient). Preservation may be done at the time of collection. However, to avoid the hazards of strong acids in the field, transport restrictions and possible contamination, samples may be shipped to the laboratory within two weeks of collection and preserved upon receipt in the laboratory. Following acidification, the sample is mixed and held for sixteen hours, and then verified to be pH<2 just prior to withdrawing an aliquot for digestion or "direct analysis." If the sample pH >2, more acid must be added and the sample held for sixteen hours until verified to be pH<2.

5.2.3 Drinking Water Samples: Samples are preserved by acidifying with (1+1) nitric acid to pH<2 (normally, 3 mL of (1+1) nitric acid per liter of sample is sufficient). Preservation may be done at the time of collection. However, to avoid the hazards of strong acids in the field, transport restrictions and possible contamination, samples may be shipped to the laboratory within two

weeks of collection and preserved upon receipt in the laboratory. Following acidification, the sample is mixed and held for sixteen hours, and then verified to be pH<2 just prior to withdrawing an aliquot for turbidity measurement. If the sample turbidity <1 NTU, the sample can be analyzed directly without digestion.

5.3 The holding time for properly preserved samples is six months.

6 INTERFERENCES

6.1 Isobaric elemental interferences - Isobaric elemental interferences result when isotopes of different elements have the same nominal mass-to-charge ratio and cannot be resolved with the instrument's spectrometer. One way to solve this problem is to measure a different isotope for which there is no interference. Alternatively, one can monitor another isotope of the interfering element and subtract an appropriate amount from the element being analyzed, using known isotope ratio information. Corrections for most of the common elemental interferences are programmed into the software.

All analytes listed in Section 1.1 have at least one isotope free of isobaric elemental interference. Of the analytical isotopes recommended for use with this method (Table 3), only molybdenum-98 (ruthenium) and selenium-82 (krypton) have isobaric elemental interferences. If alternative analytical isotopes having higher natural abundance are selected in order to achieve greater sensitivity, an isobaric interference may occur. All data obtained under such conditions must be corrected by measuring the signal from another isotope of the interfering element and subtracting the appropriate signal ratio from the isotope of interest. A record of this correction process should be included with the report of the data. Such corrections will only be as accurate as the accuracy of the isotope ratio used in the elemental equation for data calculations. Relevant isotope ratios should be established prior to the application of any corrections.

6.2 Abundance Sensitivity Interference - Abundance sensitivity interference refers to the degree of peak overlap that can occur between adjacent peaks. An interference can occur when the shoulder of a large peak significantly overlaps the peak of a neighboring of a minor peak, thereby contributing to its intensity. The potential for these interferences should be recognized and the spectrometer resolution adjusted to minimize them.

6.3 Isobaric Polyatomic Ion Interferences - Isobaric polyatomic interferences result when ions containing more than one atom have the same nominal mass-to-charge ratio as an analyte of interest and cannot be resolved by the instrument's spectrometer. Examples include $ArCl^+$ (mass 75) which interferes with As. ClO^+ (mass 51) which interferes with V, which must be corrected by measuring ClO^+ at mass 53. This in turn must be adjusted for contribution from Cr at mass 53.

These interferences are highly dependent on the matrix of the samples and day-to-day plasma conditions, so correction factors may be determined on the day of analysis. When possible, one should choose an interference-free isotope to measure. The Region 9 Laboratory does not routinely calculate these correction factors and uses the recommended elemental equations for data calculations which are listed in Table 2.

6.4 Physical Interferences - Physical interferences result from the physical processes associated with the transport of sample to the plasma, sample behavior within the plasma, and transmission through the interface region between the plasma and the mass spectrometer. Viscosity and surface tension differences can affect results, as can deposits on the sampler and skimmer cones caused by large quantities of dissolved solids in the samples. The interferences can be compensated for by the use of internal standards that approximate the analytical behavior of the elements being determined. Additionally it is recommended that dissolved solids in samples be kept below 0.2% (w/v).

6.5 Memory Interference - Memory interferences are related to sample transport and result when there is carryover from one sample to the next. Sample carryover can result from sample deposition on the sample and skimmer cones and from incomplete rinsing of the sample solution from the plasma torch and the spray chamber between samples. These memory effects are dependent upon both the analyte being measured and sample matrix and can be minimized through the use of suitable rinse times.

The rinse times necessary for a particular analyte should be estimated prior to analysis. This may be achieved by aspirating a standard containing the analyte at a concentration ten times the LDR for the normal sample analysis period, followed by analysis of the rinse blank at designated intervals. The length of time required to reduce the analyte signal to less than ten times the method detection limit should be noted. The minimum rinse time between samples should be set to this time. Memory interferences may also be assessed within an analytical run by using a three or more replicate integrations for data acquisition. If the integrated signal values drop consecutively, the analyst should check for the possibility of a memory effect. If the analyte concentration in the previous sample is high enough to suspect analyte carryover, the sample should be re-analyzed after a long rinse period.

7 APPARATUS AND MATERIALS

7.1 Apparatus

Note: All reusable labware (glass, quartz, polyethylene, PTFE, FEP, etc.) should be sufficiently clean for the task objectives and isolated from other laboratory glassware. Please refer to ESAT Region 9 SOP 130, Glassware Cleaning Procedures, for specific instructions (reference 3 of section 11).

7.1.1 ICP-MS System, comprised of following:
Fisons Genesis Inductively Coupled Plasma Mass Spectrometer
Gilson Autosampler
Gilson Minipuls3 peristaltic pump
Neslab CFT - 760 Refrigerated Circulator
Cetac U-5000+ Ultrasonic Nebulizer
Argon gas supply (high-purity grade, 99.99%)

7.1.2 Convection drying oven, with thermostatic control capable of maintaining 104±1°C.
7.1.3 Pipetters, capable of delivering volumes ranging from 10 to 1000 L, and associated metal-free disposable pipet tips.
7.1.4 Syringe with 0.45um Whatman disk filters.
7.1.5 Glassware - Class A volumetric flasks, graduated cylinders and funnels (glass and/or metal-free plastic).
7.1.6 Class A volumetric pipettes.
7.1.7 Narrow-mouth storage bottles, FEP (fluorinated ethylene propylene) with screw closure, 125-mL to 1-L capacities.
7.1.8 One-piece stem FEP wash bottle with screw closure, 500-mL capacity.

7.2 Materials and Reagents

Reagents may contain elemental impurities which might affect analytical data. Only high-purity reagents that conform to the American Chemical Society (ACS) specifications should be used. If the purity of a reagent is in question, analyze for contamination. All acids must be of ultra high-purity grade or equivalent. Suitable acids are available from a number of manufacturers, such as J.T. Baker or Mallinckrodt. Record the preparation of standards and reagents in the Inorganic Standards and Reagents Preparation Log Book (Attachment B).

7.2.1 Hydrochloric acid, concentrated (sp.gr. 1.19) - HCl.
7.2.2 Hydrochloric acid (1+1) - Add 500 mL concentrated HCl to 400 mL reagent water and dilute to 1 L.
7.2.3 Hydrochloric acid (1+4) - Add 200 mL concentrated HCl to 400 mL reagent water and dilute to 1 L
7.2.4 Nitric acid, concentrated (sp.gr. 1.41) - HNO_3.
7.2.5 Nitric acid (1+1) - Add 500 mL concentrated HNO_3 to 400 mL reagent water and dilute to 1L.
7.2.6 Reagent water - All references to reagent water in this method refer to ASTM Type II grade water.

7.2.7 Standard stock solutions (1000 g/mL) can be purchased from a commercial supplier such as Spex or Inorganic Ventures. The list of required elements is provided in Section 1.1.

7.2.8 Calibration Standards - Calibration standards (CAL Solution) should be prepared every two weeks or as needed. Dilute the stock standard solution to levels appropriate to the operating range of the instrument with 1% (v/v) nitric acid. The element concentrations in each CAL solution should be sufficiently high to produce good measurement precision and to accurately define the slope of the response curve. The Region 9 Laboratory uses a multi- element standard prepared with element concentrations set at 50 g/L, with the exceptions of selenium at 250 g/L.

7.2.9 Instrument Performance Check (IPC) Solution - Prepare an aliquot of the CAL standard and use to verify instrument calibration.

7.2.10 Internal Standard Solution - Prepare a multi-element standard from 1000 g/mL stock standards to contain 500 g/L each of scandium, indium, terbium and bismuth.

7.2.11 Calibration Blank (CB) - Dilute concentrated nitric acid with reagent water to obtain a 1% (v/v) nitric acid solution.

7.2.12 Laboratory Reagent Blank (LRB) - Prepare the LRB to contain all of the reagents in the same volumes as used in processing the samples. The LRB is taken through the entire preparation and analytical sequence.

7.2.13 Laboratory Fortified Blank (LFB) and Laboratory Fortified Matrix (LFM) - Prepare the LFB by fortifying an aliquot of the laboratory reagent blank with the calibration stock standards to contain 100 g/L of each analyte, except for selenium. Selenium is fortified at 500 g/L. Prepare the LFM by fortifying an aliquot of the QC sample with the calibration stock standards to contain 100 g/L of each analyte, except for selenium. Selenium is fortified at 500 g/L. For direct analysis of drinking water samples (Sect. 9.1.2), reduce the LFB and LFM concentrations by a factor of 4; the added LFB/LFM will be 25 g/L of each analyte, except for selenium which will be fortified at 125 g/L. The LFB is taken through the entire preparation and analytical sequence.

7.2.14 Rinse Blank - Dilute concentrated nitric acid with reagent water to obtain a 2% (v/v) nitric acid solution.

7.2.15 Tuning Solution - Prepare a multi-element standard from 1000 g/mL stock standards to contain 500 g/L of barium and cerium and 10 g/L each of beryllium, magnesium, cobalt, indium, lead, and uranium.

7.2.16 Quality Control Sample (QCS) - Prepare a multi-element standard from 1000 g/mL stock standards to contain 100 g/L of each analyte, except for selenium at 500 g/L. The acid content of the QCS must be the same as the acid content of the calibration standards. The source of the QCS stock standards must be different than that of the calibration standard stock solutions.

7.2.17 Quantitation Limit Standard (QL) - Prepare a multi-element standard from 1000 g/mL stock standards to contain 1 g/L of each analyte, except for arsenic, selenium and zinc at 5 g/L, aluminum at 20 *ug*/L and vanadium at 10 g/L. The acid content of the QL must be the same as the acid content of the calibration standards.

8 QUALITY CONTROL PROCEDURES

8.1 EPA Region 9 Laboratory operates a formal quality control (QC) program. As it relates to this SOP, the QC program consists of an initial demonstration of laboratory and analyst capability (refer to Region 9 Laboratory SOP 880), and the periodic analysis of laboratory solutions as a continuing check on performance.

8.2 Method Characterization - Prior to routine use, the LDR and MDL for each analyte must be determined for each operating condition (including detector used), and average of triplicate analysis of the QCS must yield acceptable results.

8.2.1 LDR - The upper limit of the LDR must be established for each mass used in quantifying results. Analyze a series of standards with concentrations spanning the range from 1 to 100 times the highest calibration standard concentration. The upper concentration factor can be adjusted by the analyst to account for detector characteristics or dissolved solids limitations/restrictions. From the analysis determine the maximum concentration for which the measured and true concentration agree within 10%. This concentration is typically defined as the upper limit of the LDR. Samples with analyte concentrations that are greater than 90% of the upper LDR limit must be diluted and reanalyzed. The LDR should be verified whenever the analytical conditions are changed.

8.2.2 MDL - A method detection limit must be confirmed annually and must be <½ QL or corrective action must be initiated.

8.2.3 QCS - Analyze a QCS in triplicate and take average results to demonstrate initial acceptable performance. The determined mean concentration from the 3 analyses of the QCS must be within ±10% of the stated QCS value or corrective action must be initiated. Analyze only prior to routine use of the procedure.

8.3 Routine Analytical Quality Control

8.3.1 Instrument performance check (IPC) solution - The laboratory must check instrument performance and verify that the instrument is properly calibrated on a continuing basis. To verify calibration, the IPC and the calibration blank are run as routine samples immediately following calibration, after every 10 analytical samples, and at the end of each run. For each analyte in the IPC, the percent recovery is calculated as follows:

$$\%R = \frac{IPC}{s} \times 100$$

where:

%R	=	percent recovery.
IPC	=	measured concentration of analyte in the IPC, g/L.
s	=	expected analyte concentration in the IPC, g/L.

The QC criteria for the initial IPC are 90-110%. If the %R for any analyte in the IPC falls outside of the QC criteria, the instrument must be recalibrated for at least the out-of-control analytes. Samples cannot be analyzed for the out-of-control analytes until an acceptable IPC is analyzed.

The QC criteria for continuing IPC samples are 90 -110%. If the %R for any analyte in the IPC falls outside of the QC criteria analysis must stop. If the out-of-control IPC analyte is within 85 - 115%, the results may be reported. The instrument must be recalibrated for at least the unacceptable out-of-control analytes. Once an acceptable calibration is obtained, the samples preceding the out-of-control IPC must be reanalyzed for the affected analytes.

8.3.2 CB - The stability of the calibration curve baseline must be monitored by analyzing a CB immediately after every IPC standard. If the absolute value of the CB result is less than ½ the QL, the result is acceptable. If the absolute value of the CB result equals or exceeds ½ the QL, the analysis must be terminated. The cause of the high CB result must be determined and the problem corrected. The instrument must be re-calibrated at least for the out-of-control analyte and all samples not bracketed by acceptable CB results must be reanalyzed.

8.3.3 QCS - Analyze a QCS daily to verify the calibration standards and acceptable instrument performance. If the measured concentrations are not within ±10% of the true values, the method performance is unacceptable. The source of the problem must be identified and corrected before proceeding with analyses.

8.3.4 QL - Analyze a QL standard daily after calibration to verify acceptable data quality. The QL recoveries should be within 50-150% of the true value. If the measured concentration are not within ±50% of the true values, the method performance is unacceptable. The source of the problem must be identified and corrected before proceeding with analyses.

8.3.5 LRB - The laboratory must analyze at least one LRB with each batch of 20 or fewer samples of the same matrix. LRB data are used to assess contamination from the laboratory environment and sample preparation reagents. LRB values that exceed the QL indicate potential laboratory or

reagent contamination. If the potential contamination significantly impacts the analytical results, the LRB must be re-prepared along with the affected samples, and the affected analytes re-analyzed. Unless specified otherwise, the following statement describes when samples must be re-prepared:

1) If the LRB analyte concentration is ≥ the QL and the sample result is less than 5 times the LRB analyte concentration, the LRB and sample must be re-prepared and re-analyzed.

8.3.6 LFB - The laboratory must analyze at least one LFB with each batch of 20 or fewer samples of the same matrix. Calculate the percent recovery for each analyte using the following equation:

$$\%R = \frac{LFB}{s} \times 100$$

where:

%R	=	percent recovery.
LFB	=	measured concentration of analyte in the LFB, g/L.
s	=	expected analyte concentration in the LFB, g/L.

If the recovery falls outside the control limits of 85-115%, re-analyze once. If the recovery still falls outside the control limits of 85-115% upon re-analysis, the analyte is judged to be out-of-control, and the source of the problem must be identified and resolved. All samples associated with the out-of-control LFB must be re-prepared and re-analyzed.

8.3.7 LFM - Sample homogeneity and the chemical nature of the sample matrix can affect analyte recovery and the quality of the data. LFM results can be used to assess these matrix effects and potential impact to data usability.

One LFM must be prepared for every 10 routine samples of the same matrix in a sample batch (e.g., 1 LFM for batches containing 1-10 routine samples, 2 LFMs for batches containing 11 -20 routine samples). Homogenize the routine sample selected as the LFM and spike a representative aliquot with the analytes of interest, prior to any sample preparation. For aqueous samples, the spiking level must be the same as that used for the LFB (Section 7.2.13). Calculate the percent recovery for each analyte using the following equation:

$$\%R = \frac{Clfm - C}{s} \times 100$$

where:

$\%R$	=	percent recovery.
C_{lfm}	=	measured concentration of analyte in the LFM, corrected for sample preparation and any dilutions, g/L.
C	=	measured concentration of analyte in the routine sample corrected for sample preparation and any dilutions, g/L.
s	=	expected analyte concentration in the LFM, corrected for sample preparation and any dilutions, g/L.

If the value of C is less than 4 times the value of s, the acceptance window for $\%R$ is 70-130%. If the recovery of any analyte falls outside the acceptance window other QC data must be examined to determine if a matrix problem exists. If the laboratory performance for that analyte is in control (i.e., the IPC, QCS, and LFB results are acceptable), the poor LFM recovery is most likely matrix related. The problem should be discussed in the report narrative and the data user informed that the result for that analyte in the unfortified sample is suspect due either to the heterogeneous nature of the sample or a matrix effect and considered to be an estimated quantity. All affected results should be flagged with a "J" on the analytical spreadsheet.

8.3.8 LFMD - Sample homogeneity can affect the quality and interpretation of the data. LFMD results can be used to assess sample homogeneity. One LFMD must be prepared for every 10 routine samples of the same matrix in a sample batch (e.g., 1 LFMD for a batch containing 1-10 routine samples, 2 LFMDs for a batch containing 11-20 routine samples, etc.). Samples identified as field blanks cannot be used for LFMD sample analysis. Homogenize the routine sample selected as the LFMD, obtain a representative aliquot, and proceed with sample preparation and analysis, treating the LFMD sample as a routine sample. Calculate the recovery of analyte in the LFMD following the equation in Section 8.3.7 and the relative percent difference using the following equation:

$$RPD = \frac{|C_{lfmd} - C_{lfm}|}{(C_{lfmd} + C_{lfm})/2} \times 100$$

Where

RPD	=	relative percent difference.
C_{lfm}	=	measured concentration in the LFM corrected for sample preparation and any dilutions, mg/L.
C_{lfmd}	=	measured concentration in the LFMD corrected for sample preparation and any dilutions, mg/L.

The relative percent difference (RPD) must be ≤20%. If the control limits for an analyte are exceeded, flag the associated result for the analyte as estimated (J flag). Document actions in the report narrative.

8.3.9 Internal Standard Response - Monitor the signal intensity for the internal standard masses throughout the analytical run. This information is useful in detecting instrument drift, sensitivity shifts, dissolve solids content and inherent internal standard (i.e., a natural constituent in a sample). The absolute intensity of any one internal standard must not deviate more than 60-125% from its original intensity in the calibration blank. If deviations greater than these are observed, flush the instrument with the rinse blank and re-analyze the calibration blank and examine the internal standard intensities with the following actions:

1) If the intensities of the internal standards are acceptable, dilute a fresh aliquot of the sample in question by a factor of two or five, and re-analyze.
2) If the intensities of the internal standards are still out-of-limits, terminate the analysis and determine the cause of the drift. Routine maintenance of the sampling interface or re-tuning the mass spectrometer may be required. The system must be calibrated and any samples not bordered by acceptable IPC samples re-analyzed.

9 ANALYTICAL PROCEDURES

9.1 Sample Preparation

9.1.1 Aqueous Samples, Dissolved Analytes - For the determination of dissolved analytes in ground and surface waters, pipet a 20 mL aliquot of the filtered, acid preserved sample into a 50-mL polypropylene centrifuge tube. Add 0.40mL (1+1) nitric acid to adjust the acid concentration to 1% (v/v). The sample is now ready for analysis. For LFB and LFM analyses, the samples should be spiked at 25 g/L for all analytes and 125 g/L for selenium.

Note: If a precipitate is formed during acidification, transport, or storage, the sample aliquot must be digested using the procedure in Region 9 Laboratory SOP 403 prior to analysis.

9.1.2 Drinking Water Samples, Total Recoverable Analytes, Direct Analysis - Drinking water samples with turbidity <1 NTU may be acidified and analyzed directly without digestion. Pipet a 20 mL aliquot of the unfiltered, acid-preserved sample into a 50-mL polypropylene centrifuge tube. Add 0.40mL (1+1) nitric acid to adjust the acid concentration to 1% (v/v). The sample is now ready for analysis. For LFB and LFM analyses, the samples should be spiked at 25 g/L for all analytes and 125 g/L for selenium.

Note: If a precipitate is formed during acidification, transport, or storage, the sample aliquot must be digested using the procedure in Region 9 Laboratory SOP 403 prior to analysis.

9.1.3 Sample Preparation for Aqueous Samples (1% undissolved solids), Total Recoverable Analytes - The sample preparation procedure for samples to be analyzed by ICP-MS is found in Region 9 Laboratory SOP 403.

9.2 Calibration and Standardization

9.2.1 Instrument Set-up - Set-up the proper operating configuration of the instrument and data system. Ignite the plasma and allow to stabilize for at least 30 minutes. During this stabilization period, align the torch using 10 g/L indium standard (use the tuning solution) and verify and adjust the mass calibration and resolution. Resolution at the low mass is checked using the magnesium isotopes 24, 25, 26 and at the high mass with the lead isotopes 206, 207, 208. The spectrometer resolution should produce a peak width of approximately 0.75 amu at 5% peak height. Adjust the mass calibration to ensure 0.1 amu accuracy from unit mass.

Copy the operating procedure from the master for the daily data file. Edit so that all masses which are necessary to perform elemental calculations (for interference corrections) and which can provide information concerning data quality are monitored during the analytical run. As a minimum, those masses for the elements of interest prescribed in Table 3 must be monitored in the same scan as is used for the collection of the data.

After the plasma system (i.e., torch box, plasma, and spray chamber) has stabilized, analyze the tuning solution a minimum of five times. The RSD for each element must be less than 5% before the instrument can be calibrated and samples analyzed.

9.2.2 Internal Standardization - Add internal standards to all samples, standards, and blanks at identical levels to correct for instrument drift and physical transport interferences (for full mass range scans, a minimum of three internal standards must be monitored and used for calculation). The internal standards are added by mixing with the sample solution prior to nebulization using a second channel of the peristaltic pump and a mixing coil. The concentration of the internal standard should be sufficiently high that good measurement precision is obtained while minimizing the bias introduced if the internal standard is naturally present in the sample (i.e., the signal intensity contributed from naturally occurring internal standard element in the sample is insignificant). The initial concentration of the internal standard solution presently used for calculation contains 500 g/L of scandium, indium, terbium and bismuth, with holmium, lutetium and yttrium as alternate internal standards. The final concentration of the internal standard solution after mixing in the mixing coil with the sample is approximately 100 g/L, or one-fifth the initial concentration, of scandium, indium, terbium and bismuth. Samples are analyzed first with all internal standards present. If scandium is present in the samples, the sample data are re-processed, deleting scandium as the internal standard.

9.2.3 Calibration - A calibration blank and one calibration standard are used for calibration. Elemental equations recommended for sample data calculations are listed in Table 2.

9.3 Sample Analysis

9.3.1 Screening - For every new or unusual matrix, screen a test sample for elements with significantly high concentration of naturally occurring internal standard elements. Use the internal standard mix as a calibration standard. Calibrate the instrument, verify the calibration by running the CAL standard and CB as surrogate samples. The samples will be run to screen samples for internal standards above 2 g/L (or >1% internal standard). If internal standards are detected, that internal standard cannot be used for sample calculations. One sweep will be performed semiquantitively.

9.3.2 Analytical Run Sequence

Set-up and configure the instrument and data system.
Tune the instrument.
Calibrate the instrument.
Enter autosampler loading list into data system, including all required QC and routine samples.
Start autosampler analysis sequence and analyze samples.
Review results for QC compliance and off-scale results. Identify samples which must be re-analyzed in a different analytical run. Samples having analytes at concentrations higher than the linear dynamic range must be diluted into range and re-analyzed.

An example of a loading list for an analytical run sequence is listed in the table below.

Seq.	Desc.	Seq.	Desc.	Seq.	Desc.	Seq.	Desc.
1	IPC	13	IPC	25	IPC	37	IPC
2	CB	14	CB	26	CB	38	CB
3	QCS	15	S5	27	S13	39	S21
4	QL	16	S6	28	S14	40	S21-LFM
5	LRB	17	S7	29	S15	41	S21-LFMD
6	LFB	18	S8	30	S16	42	S22
7	S1	19	S09	31	S17	43	S23
8	S1-LFM	20	S10	32	S18	44	IPC
9	S1-LFMD	21	S11	33	S19	45	CB
10	S2	22	S11-LFM	34	S20		End
11	S3	23	S11-LFMD	35	LRB		
12	S4	24	S12	36	LFB		

9.4 Data Reduction, Rounding and Reporting - After set-up and calibration the instrument reports results for the analyzed solution in the units of g/L. The instrument calculations include elemental correction calculations, internal standard correction calculations, and calibration factors.

The concentrations reported by the instrument must be corrected for any dilutions performed as part of the sample preparation or analysis process. All results should be reported using no more than two significant figures; however, no values of less significance than the QL may be reported (values near the QL will be reported with only one significant figure). Report down to ½ the QL. Values between ½ the QL and the QL will be flagged as estimated (J flag). For rounding results, adhere to the following rules:

- If the number following those to be retained is less than 5, round down;
- If the number following those to be retained is greater than 5, round up; or
- If the number following the last digit to be retained is equal to 5, round down if the digit is even, or round up if the digit is odd.

9.4.1 Aqueous Samples - Data for aqueous samples should be reported in units of g/L using the following calculation:

$$C = M \times \frac{V_f}{V_i} \times D$$

where:

C	=	final reported concentration, in g/L.
M	=	measured concentration reported by instrument, in g/L.
V_f	=	final volume of sample solution after sample preparation, in mL.
V_i	=	initial volume of sample used in sample preparation, in mL.
D	=	sample analysis dilution factor, to account for any dilution performed after sample preparation.

10 DOCUMENTATION

10.1 ICP-MS Run Log - Entries are made for the case number, SDG number, date of analysis, site name, file name, analyst initials, lab sample IDs, client sample IDs, and comments, if any. The run log is maintained in Room 301. (Attachment C)

10.2 Inorganic Standards and Reagents Preparation Log Book - Copies of all standard solution preparation entries (CAL, IPC, QL, LFB, LFM, LFMD, QCS, etc.) must be submitted with each data package. (Attachment B)

10.3 Report Narrative and Deliverable

The data package consists of the report narrative, forms, and data, as listed in the table below.

Data Package Contents
Report Narrative: Discusses any problems encountered, both technical and administrative, the corrective action taken, and the resolution. All universal analytical flags should also be discussed in the report narrative.
Tabulated sample results: On an analytical spreadsheet, with units, sample collection dates, client sample IDs, laboratory IDs and station locations. (Attachment D)
LRB data: Included on the analytical spreadsheet. (Attachment D)
LFM and LFMD results: On a QC summary form with calculated relative percent difference (RPD). (Attachment E)
LFM, LFMD and LFB results: On a QC summary form with calculated percent recoveries (%R). (Attachments E)
Raw sample, standard and QC data, including run logs and any work sheets, if applicable. (Attachments B and C)

11 REFERENCES

11.1 U.S. Environmental Protection Agency. Method 200.8, *Determination of Trace Elements by in Waters and Wastes by Inductively Coupled Plasma - Mass Spectrometry, Revision 5.4, EMMC Version, May 1994.*

11.2 U.S. Environmental Protection Agency. SW846 Method 6020, *Inductively Coupled Plasma-Mass Spectrometry, Revision 0, 9/94.*

11.3 Fisons-VG Genesis Users Manual.

11.4 Region 9 SOP 130, *Glassware Cleaning Procedures.*

11.5 Region 9 SOP 462, *Analysis of Total Suspended Solids By EPA Method 160.2.*

11.6 Region 9 SOP 715, *Glassware Cleaning Procedures.*

11.7 Region 9 SOP 830, *Notification Procedures for Results Exceeding the Safe Drinking Water Act Maximum Contaminant Level.*

11.8 Region 9 SOP 840, *Notebook Documentation and Control.*

11.9 Region 9 SOP 880, *Demonstration of Laboratory Capability and Analyst Proficiency.*

11.10 Region 9 SOP 403, *Sample Preparation for GFAA, ICP-AES and ICP-MS Spectrometry Analyses*

11.11 Region 9 SOP 110, *Sample Receipt, Login, and Storage*

Table 1: Internal Standards And Limitations of Use

Internal standard	Mass	Possible Limitation
^{6}Lithium	6	a
Scandium	45	polyatomic ion interference
Yttrium	89	a,b
Rhodium	103	
Indium	115	isobaric interference by Sn
Terbium	159	
Holmium	165	
Lutetium	175	
Bismuth	209	a

a May be present in environmental samples

b In some instruments Yttrium may form measurable amounts of YO^+ (105 amu) and YOH^+ (106 amu). If this is the case, care should be taken in the use of the cadmium elemental correction equation.

Internal standards recommended for use with this method are underlined.
Internal standards currently used by R9 Lab are in bold.

Table 2: Recommended Elemental Equations for Data Calculations

Element	Elemental Equation	Note
Al	$(1.000)(^{27}C)$	
Sb	$(1.000)(^{123}C)$	
As	$1.000(^{75}C)-(3.1278)[(^{77}C)-(0.3254)(^{78}C)]$	1
Ba	$1.000(^{137}C)$	
Be	$1.000(^{9}C)$	
Cd	$1.000(^{111}C)-(1.073)[(^{108}C)-(0.712)(^{106}C)]$	2
Cr	$1.000(^{52}C)$	3
Co	$1.000(^{59}C)$	
Cu	$1.000(^{63}C)$	
Pb	$1.000(^{206}C)+1.000(^{207}C)+1.000(^{208}C)$	4
Mn	$1.000(^{55}C)$	
Mo	$1.000(^{98}C)-0.146(^{99}C)$	5
Ni	$1.000(^{60}C)$	
Se	$1.000(^{82}C)$	6
Ag	$1.000(^{107}C)$	
Tl	$1.000(^{205}C)$	
Th	$1.000(^{232}C)$	
U	$1.000(^{238}C)$	
V	$1.000(^{51}C)-(3.127)[(^{53}C)-(0.113)(^{52}C)]$	7
Zn	$1.000(^{66}C)$	
Bi	$1.000(^{209}C)$	
In	$1.000(^{115}C)-0.016(^{118}C)$	8
Li	$1.000(^{6}C)-0.0813(^{7}C)$	9
Sc	$1.000(^{45}C)$	
Tb	$1.000(^{159}C)$	
Y	$1.000(^{89}C)$	

C Calibration blank subtracted counts at specified mass.
1 Correction equation for As taken from EPA method 6020. Isobaric correction for ArCl,Se. (See Reference 5 of Section 11).
2 Correction for MoO, Sn.
3 The background for ClOH will normally be small and can be estimated from the reagent blank.
4 Allowance for isobaric variability of lead isotopes.
5 Isobaric elemental correction for Ru.
6 Some Ar supplies contain Kr as an impurity. Se is corrected for ^{82}Kr by background subtraction.
7 Correction for chloride interference with adjustment for ^{53}Cr. ClO 51/53 ratio may be determined from the reagent blank. Isobaric mass 52 must be from Cr only, not ArC^{+}.
8 Isobaric correction for Sn
9 Isobaric correction for Li natural.

Table 3: Recommended Analytical Isotopes and Additional Masses Which Must Be Monitored

Element of Interest	Isotope
Aluminum	27
Antimony	121,123
Arsenic	75
Barium	135,137
Beryllium	9
Cadmium	106,108,111,114
Chromium	52,53
Cobalt	59
Copper	63,65
Lead	206,207,208
Manganese	55
Molybdenum	95,97,98
Nickel	60,62
Selenium	77,82
Silver	107,109
Thallium	203,205
Thorium	232
Uranium	238
Vanadium	51
Zinc	66,67,68
Ruthenium	99
Palladium	105
Tin	118

NOTE: Isotopes recommended for analytical determination are underlined.

Attachment A
Deviations From Reference Method

A.1 Mercury is not included in the analyte list due to excessive carryover which was not resolved using gold as a matrix modifier.

A.2 Sample digestates are allowed to settle overnight. If undissolved material does not settle out the sample digestate is filtered prior to analysis on the instrument. The laboratory does not centrifuge samples as suggested in the method.

A.3 The Region 9 Laboratory do not perform total suspended solids on samples which have no visible undissolved solids.

A.4 Aqueous samples with less than 1% undissolved solids are brought up to a final volume of 100 mL (no preparation step is performed at the instrument).

A.5 The scope of this SOP does not include the digestion of water samples and the digestion or analysis of solid samples. Refer to Region 9 Laboratory SOP 403 for the digestion procedure of water samples.

A.6 The Region 9 Laboratory do not blank subtract the LRB results from the LFB results for calculation of LFB recoveries.

A.7 The arsenic interference equation used was taken from EPA SW846 Method 6020.

A.8 Laboratory duplicate (LD) sample is not analyzed in this method, instead LFMD is analyzed for precision calculation.

Attachment B
Inorganic Standards and Reagents Preparation Log Book

INORGANIC STANDARDS AND REAGENTS PREPARATION LOG BOOK

STANDARD ID	DATE/ ANALYST	STANDARD NAME	ANALYTE	SOURCE SUPPLIER	SOURCE EXP. DATE	SOURCE LOT NO.	SOURCE CONC. /PURITY	ALIQUOT (WT or VOL)	FINAL VOLUME	FINAL CONC.	STD EXP. DATE

USEPA REGION 9 LABORATORY

Attachment C
ICP/MS Run Log

ICP/MS RUN LOG

Date:_____ File Name:_____ Analyst:_____

H.T. _____ In_____ Pb_____

Case #:_____ SDG:_____ MATRIX:_____

Site ID:_____ Page _____ of _____

	STD/ Sample ID	EPA/STD#	Comments		STD/ Sample ID	EPA/STD#	Comments
1				26			
2				27			
3				28			
4				29			
5				30			
6				31			
7				32			
8				33			
9				34			
10				35			
11				36			
12				37			
13				38			
14				39			
15				40			
16				41			
17				42			
18				43			
19				44			
20				45			
21				46			
22				47			
23				48			
24				49			
25				50			

Reviewed by:_____ Date:_____

Attachment D
Analytical Spreadsheet

EPA REGION 9 LABORATORY-RICHMOND, CA
SUMMARY OF ANALYTICAL RESULTS

Case Number: R01S20
Site: AAAZZZ
SDG: 123456A
Date: 02/01/01

Analysis: Metals
Matrix: Water

Sample No.	N/A				N/A				LRB-1				Quantitation
Sample I.D.	DUMMY				DUMMY				Reagent Blank				Limit
Date of Collection	01/23/01				01/24/01				N/A				N/A
Units	ug/L				ug/L				ug/L				ug/L
Analyte	Result		Q	Com	Result		Q	Com	Result		Q	Com	Result
Aluminum (200.7)	200	U			200	U			200	U			200
Antimony (200.8)	5	U			5	U			5	U			1
Arsenic (200.8)	20				20	U			20	U			5
Barium (200.8)	100				5	U			5	U			1
Beryllium (200.7)	1	U			1	U			1	U			1
Boron (200.7)	400				100	U			100	U			100
Cadmium (200.8)	5	U			5	U			5	U			1
Calcium (200.7)	80000				100	U			100	U			100
Chromium (200.7)	10	U			10	U			10	U			10
Cobalt (200.8)	5	U			5	U			5	U			1
Copper (200.8)	6				5	U			5	U			1
Iron (200.7)	100				100	U			100	U			100
Lead (200.8)	5	U			5	U			5	U			1
Magnesium (200.7)	30000				500	U			500	U			500
Manganese (200.8)	4		J	A	5	U			5	U			1
Mercury (245.1)									0.03	U			0.03
Molybdenum (200.8)	5	U			5	U			5	U			1
Nickel (200.7)	50	U			50	U			50	U			50
Potassium (200.7)	6000				5000	U			5000	U			5000
Selenium (200.8)	20	U			20	U			20	U			5
Silver (200.8)	5	U			5	U			5	U			1
Sodium (200.7)	240000				500	U			500	U			500
Thallium (200.8)	5	U			5	U			5	U			1
Vanadium (200.7)	20	U			20	U			20	U			20
Zinc (200.8)	120				20	U			20	U			5

Com - Comments refer to the corresponding section in the report narrative for each letter.

N/A - Not Applicable.

N/R - Not Required.

Q - Refer to data qualifiers.

U - The parameter was analyzed for, but was not detected. The associated value is the sample quantitation limit, adjusted for dilution, if any.

J - The associated value is an estimated quantity.

Filename: METSPDSHT.123

Attachment E
QC Summary

US E.P.A.
REGION 9 LABORATORY
June 20, 2000
Case Number: R00SXX
SDG: 00XXXA

Laboratory Fortified Matrix and Laboratory Fortified Matrix Duplicate

Analyzed Date	Sample ID	Analyte (Analysis)	LFM Result (ug/L)	LFMD Result (ug/L)	RPD	Q
01/01/01	AB00001	Aluminum (200.7)			??	
01/01/01	AB00001	Antimony (200.8)			??	
01/01/01	AB00001	Arsenic (200.8)			??	
01/01/01	AB00001	Barium (200.8)			??	
01/01/01	AB00001	Beryllium (200.7)			??	
01/01/01	AB00001	Boron (200.7)			??	
01/01/01	AB00001	Cadmium (200.8)			??	
01/01/01	AB00001	Calcium (200.7)			??	
01/01/01	AB00001	Chromium (200.7)			??	
01/01/01	AB00001	Cobalt (200.8)			??	
01/01/01	AB00001	Copper (200.8)			??	
01/01/01	AB00001	Iron (200.7)			??	
01/01/01	AB00001	Lead (200.8)			??	
01/01/01	AB00001	Magnesium (200.7)			??	
01/01/01	AB00001	Manganese (200.8)			??	
01/01/01	AB00001	Mercury (245.1)			??	
01/01/01	AB00001	Molybdenum (200.8)			??	
01/01/01	AB00001	Nickel (200.7)			??	
01/01/01	AB00001	Potassium (200.7)			??	
01/01/01	AB00001	Selenium (200.8)			??	
01/01/01	AB00001	Silver (200.8)			??	
01/01/01	AB00001	Sodium (200.7)			??	
01/01/01	AB00001	Thallium (200.8)			??	
01/01/01	AB00001	Vanadium (200.7)			??	
01/01/01	AB00001	Zinc (200.8)			??	

USEPA REGION 9 LABORATORY
RICHMOND, CALIFORNIA

STANDARD OPERATING PROCEDURE 515

DETERMINATION OF MERCURY IN WATER BY COLD VAPOR ATOMIC ABSORPTION SPECTROMETRY

Prepared by:

Osellie Salvador, ESAT Region 9, ICF Consulting — Date

Review by:

Richard Bauer, Chemistry Team Leader — Date

Approved by:

Brenda Bettencourt, Laboratory Director — Date

Periodic Review:

Signature	Title	Date

STANDARD OPERATING PROCEDURE 515

DETERMINATION OF MERCURY IN WATER BY COLD VAPOR ATOMIC ABSORPTION SPECTROMETRY

This SOP was prepared by ICF Consulting for the United States Environmental Protection Agency (USEPA) under the Environmental Services Assistance Team (ESAT) contract (EPA contract No. 68-W-01-028).

APPROVED BY:

Osellie Salvador, Inorganic Group Leader	Date
Surender Kaushik, QA Task Manager	Date
Jerry Vail, ESAT Program Manager	Date

ESAT Document Control Number: B0101029-0400

CONTENTS

1 SCOPE AND APPLICATION 4

2 METHOD SUMMARY 4

3 DEFINITIONS 4

4 HEALTH AND SAFETY 6

5 SAMPLE HANDLING AND PRESERVATION 6

6 INTERFERENCES 7

7 APPARATUS AND MATERIALS 7

8 QUALITY CONTROL PROCEDURES 8

9 ANALYTICAL PROCEDURES 12

10 DOCUMENTATION 16

11 REFERENCES 16

Attachment A - Deviations from Reference Method

Attachment B - Inorganic Standards and Reagents Preparation Log Book

Attachment C - Leeman PS200 Mercury Run Log

Attachment D - CETAC M6000A Automated Mercury Analyzer Run Log

Attachment E - Analytical Spreadsheet

1 SCOPE AND APPLICATION

1.1 This SOP describes the instrumental analytical procedures for mercury by cold vapor atomic absorption (CVAA). This method is applicable for drinking, ground, surface, sea and brackish water, domestic and industrial wastes. This method applies to the determination of total mercury (organic + inorganic) by EPA Method 245.1 using the Leeman PS200 Mercury Analyzer for high level samples and the CETAC M6000A Mercury Analyzer for drinking water samples. Sample and standard preparation procedures for both mercury analyzers are described in Region 9 Laboratory SOP 415.

1.2 The quantitation limit (QL) is 0.2 μg/L for total mercury analyzed using the Leeman PS200; the QL is 30 ng/L for total mercury analyzed using the CETAC M6000A.

2 METHOD SUMMARY

2.1 An aliquot of a water sample is transferred to a BOD bottle or equivalent closed-system container. The sample is digested with a dilute potassium permanganate-potassium persulfate solution for two hours at 95 °C. The digestion oxidizes all forms of mercury to Hg(II). The Hg(II) in the digested water sample is reduced with stannous chloride to elemental mercury which is sparged from the sample and detected by atomic absorption. The measurement step is performed using an automated mercury analyzer.

3 DEFINITIONS

3.1 Analytical Sample - Any sample in which mercury is being determined, excluding standards, method blanks, or QC reference samples.

3.2 Calibration Blank (CB) - A volume of reagent water fortified with the same matrix as the calibration standards, but without the analytes.

3.3 Calibration Standard (CAL) - A solution prepared from the primary dilution standard solution or stock standard solutions. The CAL solutions are used to calibrate the instrument response with respect to analyte concentration.

3.4 Field Reagent Blank (FRB) - An aliquot of reagent water or other blank matrix that is placed in a sample container in the laboratory and treated as a sample in all respects, including shipment to the sampling site, exposure to the sampling site conditions, storage, preservation, and all analytical procedures. The purposes of the FRB is to determine if contamination is occurring in the field environment. Note: Field reagent blanks cannot be used for LD or LFM analyses.

3.5 Field Duplicates (FD) - Two separate samples collected at the same time and placed under identical circumstances and treated exactly the same throughout field and laboratory procedures. Analyses of field duplicates indicate the precision associated with sample collection and storage as well as with laboratory procedures.

3.6 Instrument Performance Check Solution (IPC) - A standard containing the analytes of interest which is used to verify the accuracy of the analysis and monitor instrument drift. It is analyzed periodically throughout an analysis sequence.

3.7 Laboratory Fortified Blank (LFB) - An aliquot of reagent water or other blank matrix to which known quantities of the method analyte is added in the laboratory. The LFB is analyzed exactly like a sample, and its purpose is to determine whether the methodology is in control, and whether the laboratory is capable of making accurate and precise measurements.

3.8 Laboratory Fortified Sample Matrix (LFM) - An aliquot of an analytical sample to which known quantities of the method analyte is added in the laboratory. The LFM is analyzed exactly like a sample, and its purpose is to determine whether the sample matrix contributes bias to the analytical results. The background concentrations of the analyte in the sample matrix must be determined in a separate aliquot and the measured values in the LFM corrected for background concentrations.

3.9 Laboratory Fortified Matrix Duplicate (LFMD) - A duplicate aliquot of an analytical sample to which known quantities of the method analyte is added in the laboratory. The LFMD is analyzed exactly like a sample, and its purpose is to determine whether the sample matrix contributes bias to the analytical results and to determine laboratory precision.

3.10 Laboratory Reagent Blank (LRB) - An aliquot of reagent water or other blank matrix that is treated exactly as a sample. The LRB is used to detect sample contamination resulting from the procedures used to prepare and analyze the samples in the laboratory environment.

3.11 Method Detection Limit (MDL) - The minimum concentration of an analyte that can be identified, measured and reported with 99% confidence that the analyte concentration is greater than zero.

3.12 Performance Evaluation Sample (PE) - A solution of method analyte(s) obtained from a second-source (Environmental Resource Associates, AccuStandard, SPEX or equivalent) and distributed by the Region 9 Laboratory QA officer for analysis. Results of analyses are used by the Region 9 Laboratory to determine statistically the accuracy and precision that can be expected when a method is performed by a competent analyst. Analyte true values are unknown to the analyst.

3.13 Quantitation Limit (QL) - The concentration at which confidence in the reported value requires no qualifying remarks. A standard is run at the QL to verify acceptable data quality. Region 9 laboratory currently has a QL of 0.2 μg/L for total mercury analyzed using the Leeman PS200 Mercury Analyzer and a QL of 30 ng/L for total mercury analyzed using the CETAC M6000A Mercury Analyzer.

3.14 Quality Control Sample (QCS) - An independent solution of the method analyte of known concentration. The QCS is obtained from a source external to the laboratory and different from the source of calibration standards. It is used to check either laboratory or instrument performance with externally prepared test materials.

3.15 Stock Standard Solution (SSS) - A concentrated solution containing one or more method analytes prepared in the laboratory using assayed reference materials or purchased from a reputable commercial source.

4 HEALTH AND SAFETY

4.1 The toxicity and carcinogenicity of each reagent used in this method has not been fully established. Each chemical should be regarded as a potential health hazard and exposure to these compounds should be minimized by good laboratory practices. Refer to the Material Safety Data Sheets located in the library and Room 413 for additional information.

4.2 Concentrated nitric and hydrochloric acids present various hazards and according to MSDS may be fatal and extremely irritating to skin and mucus membranes. Use these reagents in a fume hood and if eye or skin contact occurs, flush with large amounts of water for at least 15 minutes and if inhalation occurs, remove to fresh air. Contact the Inorganic Group Leader or Health & Safety and Env. Compliance Task Manager immediately to determine if additional treatment is required.

4.3 Mercury compounds are highly toxic if swallowed, inhaled, or absorbed through the skin. Exhaust or carrier gases should be vented to a fume hood. The analyst should use chemical resistant gloves when handling concentrated mercury standards.

4.4 The acidification of samples containing reactive materials may result in the release of toxic gases, such as cyanides or sulfides. Acidification of samples should be done in a fume hood.

4.5 Areas of high, lethal voltages exist within the instrument. Never touch parts of the instrument which are not intended for access by the instrument operator.

5 SAMPLE HANDLING AND PRESERVATION

5.1 Samples should be collected in pre-cleaned plastic or glass bottles. Volume collected should be sufficient to ensure a representative sample, allow for replicate analysis and minimize waste disposal. A 500 mL sample volume should be sufficient to meet these objectives.

5.2 Samples are received at the Region 9 Laboratory by EPA staff in Room 503. Sample IDs and dates of collection are verified against the chain-of-custody form.

5.3 Samples must be received and stored at $4 \pm 2°C$. Any deviations from the $4 \pm 2°C$ temperature requirements must be noted in the report narrative.

5.4 Samples must be received preserved with HNO_3 to pH<2. Any deviations from the preservation must be noted in the report narrative.

5.5 The maximum sample holding time for mercury is 28 days from the time of collection.

6 INTERFERENCES

6.1 Interferences have been reported for water samples containing sulfide, chloride, copper and tellurium. Organic compounds which have broad band UV absorbance (around 253.7 nm) are confirmed interferences. The concentration levels for interfering compounds are difficult to define. This suggests that quality control procedures (Sect. 8) must be strictly followed.

6.2 Low level mercury sample preparation, digestion, and analysis may be subject to environmental contamination if performed in areas with ambient backgrounds where mercury was previously employed as an analytical reagent in analyses such as total Kjeldahl nitrogen (TKN) or chemical oxygen demand (COD).

7 APPARATUS AND MATERIALS

7.1 Apparatus

7.1.1 Leeman PS200 Mercury Analyzer - includes optical cell, mercury lamp, peristaltic pump, drying tube, sample and reagent tubing and Leeman PS200 software.

7.1.2 CETAC M6000A Mercury Analyzer - includes optical cell, mercury lamp, peristaltic pump, drying tube, sample and reagent tubing, ASX-500 autosampler and CETAC M6000A software.

7.1.3 Stirrer plate and stirring bars.

7.1.4 50-mL plastic standard cups (Leeman P/N 116-2102) or 50-mL centrifuge tubes.
7.1.5 Disposable plastic or borosilicate autosampler vials, 16x100 mm.
7.1.6 Class "S" weights.
7.1.7 Analytical balance capable of weighing to the nearest 0.01 g.
7.1.8 Drying tubes.

7.2 Glassware and Incidentals

7.2.1 Volumetric Class "A" Flasks - 1000-mL, 500-mL, 250-mL and 100-mL.
7.2.2 Volumetric Class "A" Pipettes - 50-mL, 25-mL, 10-mL and 5-mL.
7.2.3 Glass or quartz wool.

7.3 Materials and Reagents

Reagents may contain elemental impurities which might affect analytical data. Only high-purity reagents that conform to the American Chemical Society (ACS) specifications should be used. If the purity of a reagent is in question, analyze for contamination. Record all standard and reagent preparations in the Inorganic Standards and Reagents Preparation Log Book (Attachment B).

7.3.1 Reagent water - All references to reagent water in this method refer to ASTM Type II grade water.
7.3.2 Hydrochloric acid (HCl), concentrated, trace metals grade or better.
7.3.3 Stannous chloride ($SnCl_2$), ACS Reagent Grade or better, suitable for mercury determination.
7.3.4 10% $SnCl_2$ in 10% HCl. Dissolve 100 g of stannous chloride (7.3.3) in 100 mL HCl (7.3.2) and dilute to 1L with reagent water. Place a stirring bar into the solution. Prepare fresh monthly.
7.3.5 Argon gas, ICP grade.
7.3.7 Magnesium perchlorate, powder or granular.
7.3.8 10% HCl. Add 200 mL HCl (7.3.2) to approximately 1.5 liters reagent water and dilute to 2L with reagent water.

8 QUALITY CONTROL PROCEDURES

8.1 EPA Region 9 Laboratory operates a formal quality control (QC) program. As it relates to this SOP, the QC program consists of an initial demonstration of laboratory capability, and the periodic analysis of laboratory reagent blanks, fortified blanks, QCS samples and other laboratory solutions as a continuing check on performance. The laboratory is required to maintain performance records that define the quality of the data that are generated.

8.2 Initial Demonstration of Proficiency - Prior to use in routine analysis, each analyst must perform the procedures noted in Region 9 Laboratory SOP 880.

8.3 Routine Analytical Quality Control

8.3.1 Calibrate the instrument using the standards prepared in Region 9 Laboratory SOP 415. Check the correlation coefficient (r); the correlation coefficient of the curve must be $\geq$0.995 or the instrument must be re-calibrated.

8.3.2 IPC - The accuracy and stability of the calibration is verified by the periodic analysis of an IPC standard. It must be analyzed immediately after calibration, after every 10 samples, and at the end of an analytical run. The recovery of analytes in the IPC is calculated as follows:

$$\%R = \frac{M}{T} \times 100$$

Where

$\%R$	=	percent recovery of the standard.
M	=	measured concentration of the analyte, μg/L or ng/L.
T	=	true concentration of the analyte in the IPC, μg/L or ng/L.

Recovery of the IPC analyzed immediately after calibration must be within 95-105% or the analysis must be terminated. Subsequent analyses of the IPC solution must be within 90 - 110% or the analyses must be terminated. The cause of the poor recovery must be determined and the problem corrected. The instrument must be re-calibrated and all samples not bracketed by acceptable IPC results must be re-analyzed.

8.3.3 CB - The stability of the calibration curve baseline must be monitored by analyzing a CB immediately after every IPC standard. If the absolute value of the CB result is less than ½ the QL, the result is acceptable. If the absolute value of the CB result equals or exceeds ½ the QL, the analysis must be terminated. The cause of the high CB result must be determined and the problem corrected. The instrument must be re-calibrated and all samples not bracketed by acceptable CB results must be re-analyzed.

8.3.4 QCS Analysis - The mercury concentration in a QCS sample must be measured once per analytical run to verify the calibration standards and acceptable instrument performance. The concentration of analyte in the QCS should be in the upper half of the calibrated range. The recoveries must be within 90-110% or the samples in the batch must be re-analyzed:

$$\%R = \frac{C_m}{C_t} \times 100$$

Where

$\%R$	=	relative percent recovery.
C_m	=	measured mercury concentration in the QCS, μg/L or ng/L.
C_t	=	true mercury concentration in the QCS, μg/L or ng/L.

8.3.5 QL - The accuracy of the calibration at the quantitation limit shall be verified by the analysis of the QL standard. The QL must be analyzed at the beginning of each analytical run, immediately after the QCS. The recovery of mercury in the QL is calculated as follows:

$$\%R = \frac{M}{T} \times 100$$

Where

$\%R$	=	percent recovery of the standard.
M	=	measured concentration of the analyte, μg/L or ng/L.
T	=	true concentration of the mercury in the QL, μg/L or ng/L.

If the QL recovery exceeds the limits of 50-150%, the analysis shall be terminated. The cause of the poor recovery must be determined and the problem corrected. The instrument must be re-calibrated and all affected samples must be re-analyzed. If after re-calibration, the QL recovery still exceeds the 50-150% limits, the calibration standards must be re-prepared and the instrument re-calibrated.

8.3.6 LRB - One LRB must be prepared and analyzed with each batch of 20 or fewer samples of the same matrix. LRB data are used to assess contamination from the laboratory environment. LRB values that exceed the QL indicate potential laboratory contamination. If the potential contamination significantly impacts the analytical results, the LRB must be re-prepared along with the affected samples, and re-analyzed. Unless specified otherwise by project data quality objectives (DQOs), the following statement describes when samples must be re-prepared and re-analyzed:

If the LRB analyte concentration is $\geq$ the QL and the sample result is less than 5 times the LRB analyte concentration, the LRB and sample must be re-prepared and re-analyzed.

8.3.7 LFB - One LFB must be prepared and analyzed with each batch of 20 or fewer samples of the same matrix. The recovery of mercury in the LFB is calculated as follows:

$$\%R = \frac{LFB}{s} \times 100$$

Where

%R	=	percent recovery.
LFB	=	measured concentration of mercury in the LFB, μg/L or ng/L.
s	=	expected mercury concentration in the LFB, μg/L or ng/L.

The recovery of mercury in the LFB must be within the 85-115% limits. If the recovery of mercury exceeds the limits, re-analyze once. If the recovery is still out, it is judged to be out-of-control, and the source of the problem must be identified and resolved before continuing analyses. All samples associated with the out-of-control LFB must be re-prepared and re-analyzed.

8.3.8 LFM - The LFM is designed to provide information about the effect of sample matrix on the measurement system. One LFM must be prepared for every 10 routine samples of the same matrix in a sample batch (e.g., 1 LFM for a batch containing 1-10 routine samples, 2 LFMs for a batch containing 11-20 routine samples, etc.). Samples identified as field blanks cannot be used for LFM sample analysis. Homogenize the routine sample selected as the LFM, obtain a representative aliquot, and proceed with sample preparation and analysis, treating the LFM sample as a routine sample. The recovery of mercury in the LFM is calculated as follows:

$$\%R = \frac{C_{lfm} - C}{s} \times 100$$

Where

%R	=	percent recovery.
C_{lfm}	=	measured concentration in the LFM corrected for sample preparation and any dilutions, μg/L or ng/L.
C	=	measured concentration of mercury in the routine sample corrected for sample preparation and any dilutions, μg/L or ng/L.
s	=	expected mercury concentration in the LFM, corrected for sample preparation and any dilutions, μg/L or ng/L.

If the value of ***C*** is less than 4 times the value of ***s***, the acceptance window for ***%R*** is 70-130%. If the recovery of analyte falls outside the acceptance window other QC data must be examined to determine if a matrix problem exists. If the laboratory performance is in control (i.e., the IPC, QL, QCS, and LFB results are acceptable), the poor LFM recovery is most likely matrix-related. The problem should be discussed in the report narrative and the data user informed that the result for the analyte in the unfortified sample is suspect due either to heterogeneous nature of the sample or a matrix effect. The affected results should be flagged with a "J" on the analytical spreadsheet.

8.3.9 LFMD - Sample homogeneity can affect the quality and interpretation of the data. LFMD results can be used to assess sample homogeneity. One LFMD must be prepared for every 10 routine samples of the same matrix in a sample batch (e.g., 1 LFMD for a batch containing 1-10 routine samples, 2 LFMDs for a batch containing 11-20 routine samples, etc.). Samples identified as field blanks cannot be used for LFMD sample analysis. Homogenize the routine sample selected as the LFMD, obtain a representative aliquot, and proceed with sample preparation and analysis, treating the LFMD sample as a routine sample. Calculate the LFMD recovery using the equation from Section 8.3.8 and the relative percent difference using the following equation:

$$\%RPD = \frac{|C_{lfmd} - C_{lfm}|}{(C_{lfmd} + C_{lfm})/2} \times 100$$

Where

$\%RPD$ = relative percent difference.

C_{lfm} = measured concentration in the LFM corrected for sample preparation and any dilutions, μg/L or ng/L.

C_{lfmd} = measured concentration in the LFMD corrected for sample preparation and any dilutions, μg/L or ng/L.

The relative percent difference (RPD) must be $\leq$20%. If the control limits are exceeded, flag the associated mercury result as estimated (J flag). Document actions in the report narrative.

9 ANALYTICAL PROCEDURES

9.1 Sample Preparation - The sample and standard preparation procedure for mercury analysis is found in Region 9 Laboratory SOP 415.

9.2 Calibration and Standardization for the Leeman PS200 Automated Mercury Analyzer - The analyst is advised to follow the recommended operating conditions provided by the manufacturer. It is the responsibility of the analyst to verify that the instrument configuration and operating conditions satisfy the analytical requirements, and to maintain quality control data verifying instrument performance. Typical operating parameters for the Leeman PS200 Automated Mercury Analyzer are as follows:

Parameter	Setting
Argon Flow Rate	0.30 liter/min
Pump Rate	5.0 mL/min

9.3 Analytical Run Sequence (Leeman PS200 Automated Mercury Analyzer)

9.3.1 Set-up and configure the instrument and data system. The Leeman PS200 mercury analyzer will be operational from a cold start (i.e. Leeman PS200 turned off) after an approximate 2.5 hour warm-up period. Inspect the pump tubing for pinching. Replace the pump tubing if excessive wear is apparent. Clamp the pump tubings in the holder and snap to seal. Prepare a fresh magnesium perchlorate drying tube by lightly packing a small loose wad of fine glass wool into both caps. Pack just enough to stop bits of magnesium perchlorate from filtering through, but not enough to restrict gas flow. Do not pack tightly. Reattach one of the caps onto the clear tube body and fill the tube with large flake magnesium perchlorate. It is important that the tube is full, but loosely packed. Firmly reattach the other cap. Pour out the reservoir containing reagent water into a waste container and add 10% hydrochloric acid (7.3.8) to a level approximately 1 inch from the top. Lightly oil the autosampler traverse arm and wipe clean.

9.3.2 After the 2.5 hour warm-up sequence has been completed, check the aperture reading by getting into the **Utility** menu and then into the **Diagnostics** menu. The aperture should be -100 to +100 (an ideal reading is zero); if not, take off the front panel of the PS200 and, using the hex wrench provided, gently adjust the bottom nut (if the value is negative) or the top nut (if the value is positive) so that the aperture reading is within the range and then replace the front panel. Use the **User Name** menu to enter analyst initials and then get back to the **Main Menu**. Select the **Protocol** (Mercury) and enter in a file name (for example, 20003021 which corresponds to instrument #2 (the Leeman PS200), the date, and the first run of the day). Transfer the calibration standards (in order, 0, 0.2, 0.5, 1.0, 5.0 and 15.0 μg/L mercury) into the first 6 spots in the 50mL standards tube rack. Place the bottle of 10% $SnCl_2$ in 10% HCl onto a stirring plate, stir, and put the tubing for the reductant into the container.

9.3.3 Transfer the QA/QC standards and samples into clean autosampler vials and place into the 44-sample capacity rack.

9.3.4 Enter the autosampler loading list into data system using **Rack Entry** and **Setup**, including all required QC and routine samples. Print the autosampler entries by pressing the F3 key.

9.3.5 Calibrate the instrument using the six standards. After calibration, get into **Calibration** on the **Main Menu** and then get into the **Line Calibration** menu. The current curve will be highlighted on the graph. Check the correlation coefficient (r); the correlation coefficient of the curve must be $\geq$0.995 or the instrument must be re-calibrated. If the correlation coefficient meets the 0.995 requirement, press the **A** key to Accept the curve and press the F3 key to print the curve.

9.3.6 Start autosampler analysis sequence and analyze samples. Review results for QC compliance and off-scale results. Identify samples which must be re-analyzed in a different analytical run. Samples

having analytes at concentrations greater than 15 μg/L must be diluted into calibration range and re-analyzed.

An example of a loading list for an analytical run sequence is listed in the table below.

Seq.	Desc.	Seq.	Desc.	Seq.	Desc.
1	IPC	13	IPC	25	IPC
2	CB	14	CB	26	CB
3	QCS	15	S5	27	S13
4	QL	16	S6	28	S14
5	LRB	17	S7	29	S15
6	LFB	18	S8	30	S16
7	S1	19	S09	31	S17
8	S1-LFM	20	S10	32	S18
9	S1-LFMD	21	S11	33	S19
10	S2	22	S11-LFM	34	S20
11	S3	23	S11-LFMD	35	IPC
12	S4	24	S12	36	CB

9.4 Calibration and Standardization for the CETAC M6000A Mercury Analyzer - The analyst is advised to follow the recommended operating conditions provided by the manufacturer. It is the responsibility of the analyst to verify that the instrument configuration and operating conditions satisfy the analytical requirements, and to maintain quality control data verifying instrument performance. Typical operating parameters for the CETAC M6000A Mercury Analyzer are as follows:

Parameter	**Setting**
Argon Flow Rate	40 mL/min
Pump Rate	Instrument Default Pump Rate

9.5 Analytical Run Sequence (CETAC M6000A Mercury Analyzer)

9.5.1 Set-up and configure the instrument and data system. To start the M-6000A from a completely cold condition, turn on the M-6000A, gas, lamp and ASX-500 Auto Sampler. Inspect the pump tubing for pinching, replace if excessive wear is apparent. Clamp the pump tubings in the holder and snap to seal (from bottom, yellow-yellow-gray-yellow). Prepare a fresh magnesium

perchlorate drying tube by lightly packing a small loose wad of fine glass wool into both caps. Pack just enough to stop bits of magnesium perchlorate from filtering through, but not enough to restrict gas flow. Do not pack tightly. Reattach one of the caps onto the clear tube body and fill the tube with large flake magnesium perchlorate. It is important that the tube is full, but loosely packed. Firmly reattach the other cap. This charge of magnesium perchlorate will last until the "wet line" has moved 1/2 to 2/3 the way across the tube. Fill the bottle connected to the rinse station with de-ionized water. Turn the pump power on, speed is maximum and direction is clockwise. Make sure that the oven radiator surface temperature is set to 125°C. It takes at least 90 minutes for the optical rail, lamp, detectors and analog electronics to thermally stabilize.

9.5.2 Prior to analysis, ensure that the gas-liquid separator (GLS) center post is fully wetted by performing this procedure at the beginning of each day. Using the quick release mechanisms, fully release the clamp tension on the lower two tube (drain) channels. Using the sample and reagent tubes, pump de-ionized water. The GLS should begin to fill with water, allow the liquid level to reach the top of the GLS center post. *Do not let the liquid level overflow into the drying tube.* Re-engage the quick-release clamps on the drain pump tubes, once the GLS has emptied, sample analysis can start.

9.5.3 Open the worksheet *LOW LEVEL MERCURY*. Then type the sample IDs using the *LABELS* tab . Transfer the calibration standards (0, 30, 50,100, 500, 1000 ng/L mercury) into the first 6 positions of the standards rack, IPC and CB into positions 8 and 9. Then pour the samples into clean autosampler vials and place into the sample rack, making sure they are in the right position as it was entered in the labels file. An example of a loading list for an analytical run sequence is listed in Section 9.3.6.

9.5.4 Define the *TIME PROFILE* by reading a test Absorbance Signal using the *READ* button on the *ANALYSIS* tab. Once this has been done, it will be necessary to set cursors, with the mouse, to mark the Signal Profile Chart for the exact times at which the Baseline Correction Points should be acquired and between which points (start/stop) the sample peak readings should be taken. Whenever running an initial Time Profile, use the highest concentration standard.

9.5.5 Zero the instrument using the *INSTRUMENT MENU*. Calibrate using the *INSTRUMENT MENU*. The correlation coefficient of the curve must be $\geq$0.995 or the instrument must be re-calibrated.

9.5.6 Start the overall analysis process using the *START* button on the *ANALYSIS* tab. Click on *Put on stand-by mode after last sample* and *Print data*. Review results for QC compliance and off-scale results. Identify samples which must be re-analyzed in a different analytical run. Samples having analytes at concentrations greater than 1000 ng/L must be diluted into calibration range and re-analyzed.

9.5.7 When analysis is done, rinse de-ionized water through the reagent and sample tube for several minutes. Next, withdraw the reagent uptake tube manually and use the M-6000A Software Controls to withdraw the autosampler probe from the rinse water. Continue pumping until the drain line runs empty, turn off the pump, unclasp the pump tubes and turn off the gas.

9.6 Data Reduction and Reporting - After set-up and calibration the Leeman PS200 software reports results for the analyzed solution in units of μg/L and the CETAC M6000A software reports results for the analyzed solutions in units of ng/L. Aqueous samples should be reported using the following equation:

$$C = M \times D$$

where

C	=	final reported concentration, in μg/L or ng/L.
M	=	measured concentration reported by instrument, in μg/L or ng/L.
D	=	dilution factor, to account for dilution performed after sample preparation.

The concentrations reported by the instrument must be corrected for any dilutions performed as part of the sample preparation or analysis process. All results should be reported using no more than two significant figures; however, no values of less significance than the QL may be reported (values near the QL will be reported with only one significant figure). Report down to ½ the QL. Values between ½ the QL and the QL will be flagged as estimated (J flag). For rounding results, adhere to the following rules:

a) If the number following those to be retained is less than 5, round down;
b) If the number following those to be retained is greater than 5, round up; or
c) If the number following the last digit to be retained is equal to 5, round down if the digit is even, or round up if the digit is odd.

10 DOCUMENTATION

10.1 Leeman PS200 Mercury Run Log - Entries are made for the case number, SDG number, date of analysis, site name, file name, analyst initials, lab sample IDs, client sample IDs, and comments, if any. The run log is maintained in Room 302.

10.2 CETAC M6000A Automated Mercury Analyzer Run Log - Entries are made for the case number, SDG number, date of analysis, site name, file name, analyst initials, lab sample IDs, client sample IDs, and comments, if any. The run log is maintained in Room 300.

10.3 Standards Documentation - Copies of all standard solution preparation entries (CAL, IPC, QL, LFB, LFM, QCS, etc.) must be submitted with each data package.

10.4 Report Narrative and Deliverable

The data package consists of the report narrative, reports and data, as listed in the table below.

Data Package Contents
Report Narrative: Discusses any problems encountered, both technical and administrative, the corrective action taken, and the resolution. All universal analytical flags should also be discussed in the report narrative.
Tabulated sample results: On an analytical spreadsheet, with units, sample collection dates, client sample IDs, laboratory IDs and station locations. (Attachment E)
Method blank data: Included on the analytical spreadsheet. (Attachment E)
LFM and LFMD results: On a QC summary report with calculated relative percent difference (RPD).
LFM and LFB results: On a QC summary report with calculated percent recoveries (%R).
Raw sample, standard and QC data, including run logs and any work sheets, if applicable.

11 REFERENCES

11.1 Determination of Mercury in Water by Cold Vapor Atomic Absorption Spectrometry, EPA Method 245.1, Environmental Monitoring Systems Laboratory, Revision 3.0, May 1994.

11.2 Leeman PS200 Operation and Maintenance Manual, Leeman Labs, Hudson, New Hampshire 03051, 1993.

11.3 CETAC M6000A Operation Manual, Omaha, Nebraska, 1998.

11.4 Region 9 Laboratory SOP 125, *Aqueous Sample Disposal.*

11.5 Region 9 Laboratory SOP 110, *Sample Receipt, Log-in and Storage.*

11.6 Region 9 Laboratory SOP 415, *Preparation of Water Samples for Mercury Analysis.*

11.7 Region 9 Laboratory SOP 830, *Notification of Exceeding Safe Drinking Water MCL.*

11.8 Region 9 Laboratory SOP 840, *Notebook Documentation and Control.*

11.9 Region 9 Laboratory SOP 880, *Demonstration of Laboratory Capability and Analyst Proficiency.*

Appendix A-7
Anions: Nitrate-N

USEPA REGION 9 LABORATORY
RICHMOND, CALIFORNIA

STANDARD OPERATING PROCEDURE 530

ANALYSIS OF ANIONS BY ION CHROMATOGRAPHY

Prepared by:

Hongsheng Li, ESAT Region 9, LMES Date

Review by:

Richard Bauer, Team Leader Date

Approved by:

Brenda Bettencourt, Laboratory Director Date

Periodic Review:

Signature	Title	Date

STANDARD OPERATING PROCEDURE 530

ANALYSIS OF ANIONS BY ION CHROMATOGRAPHY

This SOP was prepared by Lockheed Martin Environmental Services (LMES) for the United States Environmental Protection Agency (USEPA) under the Environmental Services Assistance Team (ESAT) contract (EPA contract No. 68D60005).

APPROVED BY:

Patrick Hirata, LMES Date

Kathy O'Brien, QA/QC Coordinator, LMES Date

Jack Berges, ESAT Team Manager, LMES Date

ESAT Document Control Number: ESAT-9B-968

CONTENTS

1 SCOPE AND APPLICATION 4

2 METHOD SUMMARY 4

3 DEFINITIONS 4

4 HEALTH AND SAFETY 6

5 SAMPLE HANDLING AND PRESERVATION 6

6 INTERFERENCES 6

7 APPARATUS AND MATERIALS 7

8 QUALITY CONTROL PROCEDURES 9

9 ANALYTICAL PROCEDURES 15

10 DOCUMENTATION 19

11 REFERENCES 20

Attachment A - Deviations from the Reference Method 300.0

Attachment B - Ion Chromatography Run Log

Attachment C - Analytical Spreadsheet

Attachment D - QC Summary Report

Attachment E - Inorganic Standards and Reagents Preparation Log Book

1 SCOPE AND APPLICATION

1.1 This method is applicable for drinking, ground, surface, and saline water, domestic and industrial wastes and solids leached with reagent water.

1.2 This method applies to the determination of the inorganic anions fluoride, chloride, nitrite, bromide, nitrate, ortho-phosphate and sulfate by Method 300.0.

1.3 The reporting limit (RL) is 0.10 mg/L for fluoride, nitrate (reported as mg/L N) and nitrite (reported as mg/L N), and 1.0 mg/L for chloride, bromide, ortho-phosphate (reported as mg/L P) and sulfate.

2 METHOD SUMMARY

2.1 A small volume of sample is injected onto and passed through a series of ion-exchange columns. The anions of interest are separated on the basis of their relative affinities to a low capacity, strongly basic anion exchanger. The separated anions are directed into a strongly acidic cation suppressor exchanger where they are converted to their highly conductive acid forms. The carbonate and bicarbonate eluent is converted to weakly conductive carbonic acid. The separated anions in their acid forms are detected by electrical conductivity and are qualitatively determined on the basis of retention time as compared to the standards. Quantitation is based on peak areas and a cubic calibration curve is used to determine concentrations in environmental samples.

3 DEFINITIONS

3.1 Analytical Sample - Any sample in which anions are being determined, excluding standards, blanks, or QC reference samples.

3.2 Calibration Blank (CB) - A volume of reagent water analyzed immediately after an IPC to check the stability of the calibration curve baseline.

3.3 Calibration Standard (CAL) - A solution prepared from the stock standard solutions. The CAL solutions are used to calibrate the instrument response with respect to analyte concentration.

3.4 Field Reagent Blank (FRB) - An aliquot of reagent water or other blank matrix that is placed in a sample container in the laboratory and treated as a sample in all respects, including shipment to the sampling site, exposure to the sampling site conditions, storage, preservation, and all analytical procedures. The purposes of the FRB is to determine if contamination is occurring in the field environment. Note: Field reagent blanks cannot be used for LD or LFM analyses.

3.5 Field Duplicates (FD) - Two separate samples collected at the same time and placed under identical circumstances and treated exactly the same throughout field and laboratory procedures. Analyses of field duplicates indicate the precision associated with sample collection and storage as well as with laboratory procedures.

3.6 Instrument Performance Check Solution (IPC) - A solution of method analytes used to evaluate the performance of the instrument system with respect to a defined set of criteria.

3.7 Laboratory Fortified Blank (LFB) - An aliquot of reagent water or other blank matrix to which known quantities of the method analytes are added in the laboratory. The LFB is analyzed like a sample, and its purpose is to determine whether the methodology is in control, and whether the laboratory is capable of making accurate and precise measurements.

3.8 Laboratory Fortified Sample Matrix (LFM) - An aliquot of an analytical sample to which known quantities of the method analytes are added in the laboratory. The LFM is analyzed exactly like a sample, and its purpose is to determine whether the sample matrix contributes bias to the analytical results. The background concentrations of the analytes in the sample matrix must be determined in a separate aliquot and the measured values in the LFM corrected for background concentrations.

3.9 Laboratory Duplicate (LD) - An aliquot of sample prepared and analyzed separately with identical procedures. Analysis of the sample and LD indicates precision associated with the laboratory procedures, but not with sample collection, preservation or storage procedures.

3.10 Laboratory Reagent Blank (LRB) - An aliquot of reagent water or other blank matrix that is treated exactly as a sample. The LRB is used to detect sample contamination resulting from the procedures used to prepare and analyze the samples in the laboratory environment.

3.11 Calibration Range (CR) - The concentration range over which the instrument response is calibrated.

3.12 Method Detection Limit (MDL) - The minimum concentration of an analyte that can be identified, measured and reported with 99% confidence that the analyte concentration is greater than zero.

3.13 Quality Control Sample (QCS) - A solution of method analytes of known concentrations that is used to fortify an aliquot of LRB or sample matrix. The QCS is obtained from a source external to the laboratory and different from the source of calibration standards. It is used to check laboratory performance with externally prepared test materials.

3.14 Stock Standard Solution (SSS) - A concentrated solution containing one or more method analytes prepared in the laboratory using assayed reference materials or purchased from a reputable commercial source.

4 HEALTH AND SAFETY

4.1 Safety precautions must be taken when handling solutions and samples. Protective clothing including lab coats, safety glasses and gloves must always be worn. Contact lenses must not be worn. If solutions come into contact with your eyes, flush with water continuously for 15 minutes. If solutions come in contact with your skin, wash thoroughly with soap and water. Contact your Supervisor or Health and Safety Coordinator to determine if additional treatment is required.

5 SAMPLE HANDLING AND PRESERVATION

5.1 Samples should be collected in plastic or glass bottles. All bottles must be thoroughly cleaned and rinsed with reagent water. Volume collected should be sufficient to insure a representative sample, allow for replicate analysis and minimize waste disposal.

5.2 Samples are received at the Region 9 Laboratory by EPA staff in Room 503. Sample IDs and dates of collection are verified against the chain-of-custody form.

5.3 Samples must be received and stored at 4 ±2°C. Any deviations from the 4 ±2°C temperature requirements must be noted in the case narrative.

5.4 Holding Times For IC Analytes - The maximum sample holding time for ortho-phosphate, nitrate and nitrite is 48 hours from the time of sample collection. For chloride, bromide, fluoride and sulfate, the holding time is 28 days.

6 INTERFERENCES

6.1 Interferences can be caused by substances with retention times that are similar to and overlap those of the anion of interest. Large amounts of an anion can interfere with the peak resolution of an adjacent anion. Sample dilution and/or fortification with concentrated eluent can be used to solve most interference problems associated with retention times.

6.2 The water dip or negative peak that elutes near, and can interfere with, the fluoride peak can usually be eliminated by the addition of the equivalent of 1 mL of concentrated eluent (100X) to 100 mL of each standard and sample although this is not routinely employed in this procedure.

6.3 Method interferences may be caused by contaminants in the reagent water, reagents, glassware, and other sample processing apparatus that lead to discrete artifacts or elevated baseline in ion chromatograms.

6.4 Samples that contain particles larger than 0.45 microns and reagent solutions that contain particles larger than 0.20 microns require filtration to prevent damage to instrument columns and flow systems.

6.5 The acetate anion elutes early during the chromatographic run. The retention times of the anions also seem to differ when large amounts of acetate are present. Therefore, this method is not recommended for leachates of solid samples when acetic acid is used for pH adjustment.

7 APPARATUS AND MATERIALS

7.1 Apparatus

7.1.1 Dionex Ion Chromatograph Model DX120 System - Includes the Advance Chromatography Module, pump, Conductivity Cell Detector, Dionex Advance Computer Interface and Dionex DX-120 Data Chromatography Software.
7.1.2 Dionex Autosampler.
7.1.3 Anion Guard Column - AG14 from Dionex or equivalent.
7.1.4 Anion Separator Column - AS14 from Dionex or equivalent.
7.1.5 Anion Suppressor device - Anion Self-Regenerating Suppressor ASRS-II from Dionex or equivalent.
7.1.6 Analytical Balance - capable of weighing accurately to ±0.0001 g.
7.1.7 Class "S" weights.
7.1.8 Stirrer Plate and stirring bars.
7.1.9 Disposable Syringe Filters, 0.20 micron and 0.45 micron.
7.1.10 10 mL Disposable Syringes with luer-lock fittings.
7.1.11 Dionex Polyvials, 5 mL capacity with filter caps (Dionex P/N 38141).

7.2 Glassware

7.2.1 Volumetric Class "A" Flasks - 1000 mL, 500 mL, 250 mL and 100 mL.
7.2.2 Volumetric Class "A" Pipettes - 50 mL, 25 mL, 10 mL and 5 mL.
7.2.3 Drying oven, capable of being controlled at 105 ± 5°C.
7.2.4 Desiccator.
7.2.5 Plastic or Teflon spray bottle.
7.2.6 Class "S" weights.

7.3 Materials and Reagents

Reagents may contain elemental impurities which might affect analytical data. Only high-purity reagents that conform to the American Chemical Society (ACS) specifications should be used. If the purity of a reagent is in question, analyze for contamination.

7.3.1 Reagent water - All references to reagent water in this method refer to ASTM Type II grade water, ASTM D1193.
7.3.2 Degassed reagent water - Reagent water that has been purged with helium for 2 minutes.
7.3.3 Sodium Bicarbonate ($NaHCO_3$), reagent grade.
7.3.4 Sodium Carbonate (Na_2CO_3), reagent grade.
7.3.5 Sulfuric Acid (H_2SO_4), concentrated, reagent grade.
7.3.6 Sodium Chloride (NaCl), reagent grade.
7.3.7 Sodium Fluoride (NaF), reagent grade.
7.3.8 Sodium Nitrate ($NaNO_3$), reagent grade.
7.3.9 Sodium Nitrite ($NaNO_2$), reagent grade.
7.3.10 Sodium Bromide (NaBr), reagent grade.
7.3.11 Potassium Phosphate (KH_2PO_4), reagent grade.
7.3.12 Potassium Sulfate (K_2SO_4), reagent grade.
7.3.13 Gases
7.3.13.1 Helium, UHP.
7.3.13.2 Nitrogen, UHP.

7.4 Preparation of Solutions and Standards

7.4.1 Eluent Solutions

7.4.1.1 Two eluent stock solution concentrates are required. The first eluent concentrate is 0.5 M sodium carbonate prepared by dissolving 26.49 g of sodium carbonate in 400 mL of reagent water and diluting to final volume of 500 mL. The second eluent concentrate is 0.5 M sodium bicarbonate prepared by dissolving 21.00 g of sodium bicarbonate in 400 mL of reagent water and diluting to final volume of 500 mL. Record the reagent preparation in Inorganic Standards and Reagents Preparation Log Book (Attachment E).

7.4.1.2 The working eluent solution is prepared by pipetting 7.0 mL of 0.5 M Na_2CO_3 plus 2.0 mL of 0.5 M $NaHCO_3$ into a 1L volumetric flask and diluting to volume with degassed reagent water. Record the reagent preparation in Inorganic Standards and Reagents Preparation Log Book (Attachment E).

7.4.2 Stock Standards: Stock standard solutions may be purchased as certified solutions or prepared from ACS reagent grade materials (dried at 105°C for 30 minutes) and are stable for 1 month when stored at 4°C. Record the standard preparation in Inorganic Standards and Reagents Preparation Log Book (Attachment E).

7.4.2.1 Mixed Stock Standard 1: 1000 mg/L fluoride, chloride, nitrite, bromide, nitrate, ortho-phosphate and sulfate standard - Prepare by dissolving 2.2100 g NaF, 1.6485 g NaCl, 4.9257 g $NaNO_2$, 1.2878 g NaBr, 6.0679 g $NaNO_3$, 4.3937 g KH_2PO_4 and 1.8141 g K_2SO4 in reagent water and dilute to volume in a 1-L volumetric flask.

7.4.3 Calibration Standard 5: 50 mg/L fluoride, chloride, nitrite, bromide, nitrate, ortho-phosphate and sulfate standard - Pipet 5.0 mL of Mixed Stock Standard 1 (7.4.2.1) into a 100-mL volumetric flask and dilute to volume with reagent water. Prepare fresh daily.

7.4.4 Calibration Standard 4: 25 mg/L fluoride, chloride, nitrite, bromide, nitrate, ortho-phosphate and sulfate standard - Pipet 2.5 mL of Mixed Stock Standard 1 (7.4.2.1) into a 100-mL volumetric flask and dilute to volume with reagent water. Prepare fresh daily.

7.4.5 Calibration Standard 3: 5.0 mg/L fluoride, chloride, nitrite, bromide, nitrate, ortho-phosphate and sulfate standard - Pipet 0.5 mL of Mixed Stock Standard 1 (7.4.2.1) into a 100-mL volumetric flask and dilute to volume with reagent water. Prepare fresh daily.

7.4.6 Calibration Standard 2: 1.0 mg/L fluoride, chloride, nitrite, bromide, nitrate, ortho-phosphate and sulfate standard - Pipet 2.0 mL of Calibration Standard 5 (7.4.3) into a 100-mL volumetric flask and dilute to volume with reagent water. Prepare fresh daily.

7.4.7 Calibration Standard 1: 0.1 mg/L fluoride, chloride, nitrite, bromide, nitrate, ortho-phosphate and sulfate standard - Pipet 2.0 mL of Calibration Standard 3 (7.4.5) into a 100-mL volumetric flask and dilute to volume with reagent water. Prepare fresh daily.

7.4.8 Quality Control Sample (QCS) - Analysis of a QCS solution is required. The QCS is obtained from a source external to the laboratory and different from the source of calibration standards. It is used to check laboratory performance with externally prepared test materials. R9 laboratory uses a Custom Multi-Anion solution from Spex as the QCS containing 30 mg/L each ortho-phosphate, sulfate, 20 mg/L each bromide, chloride, nitrate, nitrite and 10 mg/L fluoride. Prepare fresh daily. Record the reagent preparation in Inorganic Standards and Reagents Preparation Log Book (Attachment E).

8 QUALITY CONTROL PROCEDURES

8.1 EPA Region 9 Laboratory operates a formal quality control (QC) program. As it relates to this SOP, the QC program consists of an initial demonstration of laboratory capability, and the periodic analysis of laboratory reagent blanks, fortified blanks, performance evaluation samples and other laboratory solutions as a continuing check on performance. The laboratory maintains performance records that define the quality of the data that are generated.

8.2 Initial Demonstration of Performance - Prior to use in routine analysis, the method must be characterized in terms of calibration range verification and MDL study.

8.2.1 Calibration Range (CR) - The CR must be determined initially and verified every 6 months or whenever a significant change in instrument response is observed or expected. The initial demonstration must use sufficient standards to insure that the resulting curve is adequately defined. The verification must use a minimum of a blank and five standards. If any verification data exceeds the initial values by $\pm 10\%$, the calibration range must be reestablished.

8.2.2 MDL - MDLs must be established for all analytes, using reagent water (blank) fortified at a concentration of two to three times the estimated instrument detection limit. An MDL in reagent water represents a best case situation and does not reflect possible matrix effects of real world samples.

To determine MDL values, process seven replicate aliquots of the fortified reagent water through the entire analytical method. Perform all calculations defined in the method and report the concentration values in the appropriate units. Calculate the MDL as follows:

$$MDL = t \times s$$

where: MDL = method detection limit
t = student t value for 99% at 99% confidence interval with n-1 degrees of freedom (t=3.14 for n=7)
s = standard deviation

If the relative standard deviation (RSD) for any analyte from the analyses of the seven aliquots is <10%, the concentration of the analyte in the reagent water may have been too high, which will bias the MDL value. In such a case, the MDL study should be repeated with a lower concentration of the analyte.
MDL's are determined every 6 months, when a new operator begins work or whenever analytical conditions are changed significantly.

The MDL must be less than 1/2 the reporting limit of 0.1 mg/L for nitrite, nitrate, ortho-phosphate and 1.0 mg/L for fluoride, chloride, bromide and sulfate. If any analyte fails, the process must be examined to determine the source of variability in the analyte measurement or the lack of sensitivity. The problem must be corrected before analytical samples are measured.

8.3 Routine Analytical Quality Control

8.3.1 IPC - The accuracy and stability of the calibration shall be verified by the periodic analysis of an IPC standard. It must be analyzed at the beginning of an analytical run, after every 10 samples, and at the end of an analytical run. The recovery of analytes in the IPC is calculated as follows:

$$\%R = \frac{M}{T} \times 100$$

Where

%R = percent recovery of the standard
M = measured concentration of analyte, mg/L
T = true concentration of analyte in the IPC, mg/L

If the IPC recovery exceeds the limits of 90-110%, the analysis shall be terminated. The cause of the poor recovery must be determined and the problem corrected. The instrument must be re-calibrated and all samples not bracketed by acceptable IPC results must be reanalyzed. The IPC analyzed immediately after calibration is also a QCS (30 mg/L each ortho-phosphate, sulfate, 20 mg/L each bromide, chloride, nitrate, nitrite and 10 mg/L fluoride); both have recovery limits of 90-110%. All subsequent IPCs have analyte concentrations at 25 mg/L (7.4.4).

8.3.2 CB - The stability of the calibration curve baseline must be monitored by analyzing a CB immediately after every IPC standard. If the absolute value of the CB result is less than or equal to the RL, the result is acceptable. If the absolute value of the CB result exceeds the RL, the analysis must be terminated. The cause of the high CB result must be determined and the problem corrected. The instrument must be re-calibrated and all samples not bracketed by acceptable CB results must be reanalyzed.

8.3.3 QCS Analysis - The anion concentrations in a QCS sample must be measured daily or once per batch of 20 samples, whichever is more frequent. The first QCS analyzed is also the initial IPC (30 mg/L each ortho-phosphate, sulfate, 20 mg/L each bromide, chloride, nitrate, nitrite and 10 mg/L fluoride). The recoveries must be within 90-110% or the samples in the batch must be reanalyzed.

$$\%R = \frac{Cm}{Ct} \times 100$$

Where

$\%R$ = relative percent recovery
C_m = measured analyte concentration in the QCS
C_t = true analyte concentration in the QCS

8.3.4 Reporting Limit (RL) - To verify the ability to detect target analytes near the RL, RL standards must be analyzed at the RL level (Section 1.3) at the beginning of the analytical run but not before the initial IPC. R9 laboratory analyzed two RL standards, one with analyte concentrations at 0.1 mg/L (for fluoride, nitrate, nitrite) and the other with analyte concentrations at 1 mg/L (for chloride, bromide, ortho-phosphate, sulfate). The recovery of analytes in the RL is calculated as follows;

$$\%R = \frac{M}{T} \times 100$$

Where

%R = percent recovery of the standard
M = measured concentration of the analyte, mg/L
T = true concentration of the analyte in the RL, mg/L

If the RL recovery exceeds the limits of 70-130%, the analysis shall be terminated. The cause of the poor recovery must be determined and the problem corrected. The instrument must be re-calibrated and all affected samples must be reanalyzed. If, after recalibration, the RL recovery still exceeds the 70-130% limits, the calibration standards must be reprepared and the instrument recalibrated.

8.3.5 LRB - The laboratory must analyze at least one LRB daily or with each batch of 20 or fewer samples of the same matrix, whichever is more frequent. LRB data are used to assess contamination from the laboratory environment. LRB values that exceed the MDL indicate potential laboratory contamination. If the potential contamination significantly impacts the analytical results, the LRB must be re-prepared along with the affected samples, and re-analyzed. Unless specified otherwise by project DQOs, the following statements describe when samples must be re-prepared and re-analyzed:

1) If the sample concentration is greater than or equal to 10 times the MDL and the LRB concentration is greater than 10% of the sample concentration, the LRB and sample must be re-prepared and re-analyzed
2) If the sample concentration is less than 10 times the MDL and the LRB concentration is greater than 2.2 times the MDL, the LRB and sample must be re-prepared and re-analyzed.

8.3.6 LFB - One LFB must be prepared and analyzed with each analytical run. R9 laboratory uses the same solution used for the QCS (30 mg/L chloride, sulfate, 20 mg/L bromide, nitrate, nitrite, ortho-phosphate and 10 mg/L fluoride) as the LFB. The recovery of analyte in the LFB is calculated as follows:

$$\%R = \frac{LFB}{s} \times 100$$

Where

$\%R$ = percent recovery
LFB = measured concentration of analyte in the LFB
s = expected analyte concentration in the LFB

The recovery of the analytes in the LFB must be within the 90-110% limits. If the recovery exceeds the limits, the analysis system is judged to be out-of-control, and the source of the problem must be identified and resolved before continuing analyses.

8.3.7 Laboratory Duplicate - Sample homogeneity can affect the quality and interpretation of the data. LD results can be used to assess sample homogeneity.

One LD must be prepared for every 10 routine samples of the same matrix in a sample batch (e.g., 1 LD for a batch containing 1-10 routine samples, 2 LDs for a batch containing 11-20 routine samples, etc.). Homogenize the routine sample selected as the LD, obtain a representative aliquot, and proceed with sample preparation and analysis, treating the LD sample as a routine sample.

Calculate the relative percent difference using the following equation;

$$\%RPD = \frac{|C_{ld} - C|}{(C_{ld} + C)/2} \times 100$$

where: $\%RPD$ = relative percent difference
C_{ld} = measured analyte in the LD
C = measured analyte in the routine sample

The relative percent difference (RPD) for any analyte must be ≤20% for samples with analyte levels greater than or equal to 1.0 mg/L for nitrite (reported as N), nitrate (reported as N), ortho-phosphate (reported as P) and 10.0 mg/L for fluoride, chloride, bromide and sulfate. The absolute difference between duplicate results must be less than the reporting limit for samples containing less than 1.0 mg/L for nitrite, nitrate, ortho-phosphate and 10.0 mg/L for fluoride, chloride, bromide and sulfate. If the control limits are exceeded, flag all associated analyte results with an asterisk (*). Document actions in the case narrative.

8.3.8 LFM - The LFM is designed to provide information about the effect of sample matrix on the measurement system. One LFM must be prepared for every 10 routine samples of the same matrix in a sample batch. The same sample chosen as the LD should be used as the sample for the LFM. Samples identified as field blanks cannot be used for LFM sample analysis. The recovery of analyte in the LFM is calculated as follows:

$$\%R = \frac{C_{lfm} - C}{s} \times 100$$

Where
$\%R$ = percent recovery
C_{lfm} = measured concentration of analyte in the LFM, corrected for sample preparation and any dilutions
C = measured concentration of analyte in the routine sample corrected for sample preparation and any dilutions
s = expected analyte concentration in the LFM, corrected for sample preparation and any dilutions

If the value of s exceeds 3.3 times the value of C, the acceptance window for $\%R$ is 90-110% for drinking water samples and 75-125% for other samples. If the recovery falls outside the acceptance window other QC data must be examined to determine if a matrix problem exists. If the laboratory performance for that analyte is in control (i.e., the IPC, QCS, and LFB results are acceptable), the poor LFM recovery is most likely matrix related. Lab duplicate results should also be examined to gain additional insight as to whether the matrix components or matrix heterogeneity are the cause of the unacceptable recovery. In either case, the problem should be discussed in the case narrative and the data user informed that the result for that analyte in the unfortified sample is suspect due either to heterogeneous

nature of the sample or a matrix effect. Flag any out-of-control analytes with an "N". The spiking levels for the LFM are as follows:

Parameter	Recommended Spiking Level (mg/L)
Fluoride	20
Chloride	20
Nitrite-N	20
Bromide	20
Nitrate-N	20
O-Phosphate-P	20
Sulfate	20

8.3.9 QCS Analysis - The anion concentrations in a QCS sample must be measured daily or once per batch of 20 samples, whichever is more frequent. The recoveries must be within 90-110% or the samples in the batch must be reanalyzed.

$$\%R = \frac{C_m}{C_t} \times 100$$

Where

$\%R$ = relative percent recovery
C_m = measured analyte concentration in the QCS
C_t = true analyte concentration in the QCS

9 ANALYTICAL PROCEDURES

9.1 Calibration and Standardization - The analyst is advised to follow the recommended operating conditions provided by the manufacturer. It is the responsibility of the analyst to verify that the instrument configuration and operating conditions satisfy the analytical requirements, and to maintain quality control data verifying instrument performance.
Typical operating settings for the Dionex DX120 are as follows:

DX-120 Detector Parameters

Detector Type: DX-120
Data Collection time (minutes): 11.00
Data Collection Rate: 5.00
Real time plot scale maximum (us): 30.000
Real time plot scale minimum (us): -3.000

DX-120 Integration Parameters

Peak detection algorithm: Standard
Starting peak width (seconds):10.00
Peak threshold: 0.50
Peak area reject (area counts): 1000.00
Reference peak area reject (area counts): 1000.00

DX-120 Smoothing Parameters

Filter Type: No filter

DX-120 Integration Data Events

Time	Description
0.00	Stop peak detection
2.44	Start peak detection
2.45	Force baseline at start of this peak
2.65	Void volume treatment for this peak

DX-120 Calibration Parameters

External or internal calibration: EXTERNAL
Number of replicates for calibration:1
Rejection: Manual
Level Weighting: Equal
Calibration standard volume: 1.00
Default sample volume: 1.00
Amount units: mg/L
Replace retention time: Yes
Update response: Yes
Default dilution factor: 1.00
Default response factor for unknown peaks:0.00
Calculate unknowns by area or height: Area
Flow: 2 mL/min.

9.2 Initial Calibration

9.2.1 An initial calibration is performed by analysis of a blank and five standards of increasing analyte concentration (0.1, 1.0, 5.0, 25 and 50 mg/L for all analytes) with cubic fit. The initial calibration is considered valid as long as the instrument performance check (IPC) standard response is within the ±10% of the response for that standard level in the initial calibration. The correlation coefficient for the initial calibration must be ≥ 0.995 for the calibration to be valid. If the calibration does not meet the criteria, the analysis shall be terminated, the problem corrected, and a new calibration curve performed.

9.2.2 The QC samples in Section 8.3 must be analyzed and must be within the appropriate control limits before sample analyses are performed.

9.3 Sample Analysis

9.3.1 Fill a 5mL polyvial with well-mixed sample. Samples that contain particles larger than 0.45 microns require filtration to prevent damage to instrument columns and flow systems. Attach a 0.45 micron disposable syringe filter to a 10mL disposable syringe; pull out the plunger and pour approximately 10 mL of well-mixed sample into the syringe and reattach the plunger. Apply pressure to the plunger and filter the sample through the syringe filter and into the 5mL polyvial (discard the remaining sample into the waste container and the syringe assembly into a solid waste container). Attach a filter cap to the 5mL polyvial and push down the filter cap with the supplied tool until it is flush with the top of the polyvial. Label the contents of the polyvial and insert into the autosampler cassette.

9.3.2 Load and inject the sample. The sample loop will be flushed thoroughly.

9.3.3 The width of the retention time window used to make identifications is based upon measurements of actual retention time variations of standards over the course of the day. The manufacturer's suggested retention times were modified slightly due to instrument conditions and the experience of the analyst in the interpretation of the chromatograms. All chromatograms are reviewed to ensure that the correct peaks are integrated. The retention time windows currently used on the DX-120 are listed in the following table:

Parameter	Retention Time (min)	Retention Time Window (min)
Fluoride	2.62	2.35 - 2.88
Chloride	3.67	3.30 - 4.03
Nitrite-N	4.38	3.94 - 4.81
Bromide	5.50	4.95 - 6.05
Nitrate-N	6.10	5.49 - 6.71
O-Phosphate-P	7.80	7.02 - 8.58
Sulfate	9.35	8.41 - 10.28

9.3.4 If the response for the peak exceeds the working range of the system, dilute the sample with an appropriate amount of reagent water and reanalyze.

An example of a loading list for an analytical run sequence is listed in the table below.

Seq.	Desc.	Seq.	Desc.	Seq.	Desc.	Seq.	Desc.
1	IPC/QCS	13	IPC	25	IPC	37	IPC
2	CB	14	CB	26	CB	38	CB
3	RL1	15	S5	27	S13	39	LFB
4	RL2	16	S6	28	S14	40	S21
5	LRB	17	S7	29	S15	41	S21-LD
6	LFB	18	S8	30	S16	42	S21-LFM
7	S1	19	S9	31	S17	43	S22
8	S1-LD	20	S10	32	S18	44	S23
9	S1-LFM	21	S11	33	S19	45	S24
10	S2	22	S11-LD	34	S20	46	S25
11	S3	23	S11-LFM	35	QCS	47	IPC
12	S4	24	S12	36	LRB	48	CB

9.4 Data Reduction and Reporting - After set-up and calibration the software reports results for the analyzed solution in units of mg/L.

The concentrations reported by the instrument must be corrected for any dilutions performed as part of the sample preparation or analysis process. All results should be reported using no more than three significant figures; however, no values of less significance than the MDL may be reported (values near the MDL will be reported with only two significant figures). Report down to ½ the RL. Values between ½ the RL and the RL will be flagged as estimated (J flag).

9.4.1 Aqueous Samples - Data for aqueous samples should be reported in units of mg/L using the following calculation;

$$C = M \times D$$

where: C = final reported concentration, in mg/L
M = measured concentration reported by software, in mg/L
D = sample analysis dilution factor, to account for any dilution

9.4.2 Solid Samples - Data for solid samples should be reported in units of mg/Kg using the following calculation;

$$C = M \times \frac{V_f}{V_i} \times D$$

where: C = final reported concentration, in mg/Kg
M = measured concentration reported by software, in mg/L
V_f = final volume of sample solution after sample preparation, in Liters
V_i = initial weight of sample used in sample preparation, in kilograms
D = sample analysis dilution factor, to account for any dilution

9.4.3 Reporting - Results will be reported to 1 significant figure for analyte concentrations less than 1 mg/L, 2 significant figures for analyte concentrations less than 10 mg/L and to 3 significant figures for analyte concentrations greater than or equal to 10 mg/L. For rounding results, adhere to the following rules:

a) If the number following those to be retained is less than 5, round down;
b) If the number following those to be retained is greater than 5, round up; or
c) If the number following the last digit to be retained is equal to 5, round down if the digit is even, or round up if the digit is odd.

10 DOCUMENTATION

10.1 Raw Data

10.1.1 Ion Chromatography Run Log - Entries are made for the case number, SDG number, date of analysis, QC solution IDs, analyst initials, lab sample IDs, client sample IDs, dilution factors and comments, if any. The run log is maintained in Room 207.

10.1.2 Inorganic Standards and Reagents Preparation Log Book - Copies of all standard solution preparation entries (CAL, IPC, RL, LFB, LFM, QCS, etc.) must be submitted with each data package.

10.1.3 Chromatograms and Quantitation Reports - The chromatograms must be scaled such that the baseline used for measuring the peak is visible.

Case Narrative and Deliverable

The data package consists of the case narrative, forms, and data, as listed in the table below.

Data Package Contents
Case Narrative: Discusses any problems encountered, both technical and administrative, the corrective action taken, and the resolution. All universal analytical flags should also be discussed in the case narrative.
Tabulated sample results on an analytical spreadsheet, with units, sample collection dates, client sample IDs, laboratory IDs and station locations. (Attachment C)
Method blank data included on the analytical spreadsheet. (Attachment C)
Duplicate results on a QC summary form with calculated relative percent difference (RPD). (Attachment D)
QCS, LFM and LFB results on a QC summary form with calculated percent recoveries (%R). (Attachment D)
Raw sample, standard and QC data, including run logs and any work sheets, if applicable. (Attachment B)

11 REFERENCES

11.1 EPA Method 300.0, Determination of Inorganic Anions by Ion Chromatography, Environmental Monitoring Systems Laboratory, Revision 2.1, August 1993.
11.2 Dionex DX-120 Operation and Maintenance Manual, Dionex Corp., Sunnyvale, California 94086, 1997.
11.3 Region 9 SOP 125, *Sample Disposal.*
11.4 Region 9 SOP 110, *Sample Receipt, Log-in and Storage.*
11.5 Regional Analytical Program Client Request Form - Anions (3001295.CRF) USEPA, Revision 12/22/95.
11.6 Region 9 SOP 835, *Chromatographic Integration Procedures.*

11.7 Region 9 SOP 830, *Notification Procedures for Results Exceeding the Safe Drinking Water Act Maximum Contaminant Level.*

Attachment A
Deviations From Reference Method

A.1 This SOP specifies the use of third-order regression (cubic) calibration. Review of instrument response using various calibration protocols demonstrates that instrument response is not linear at low concentrations (less than 1 mg/L) but that the data fit a third-order calibration model very well. Using these calibration protocols has resulted in acceptable performance evaluation samples from a variety of sources. Additionally, the SOP requires the analysis of a standard at the reporting limit on a daily basis to verify instrument performance and calibration.

A.2 The scope of this SOP does not include the analysis of the inorganic anions bromate, chlorate and chlorite.

Appendix A-8
1,2,3-Trichloropropane

1,2,3-TCP analysis approval process

Analysis for 1,2,3-Trichloropropane

Last Update: August 9, 2002
1,2,3-Trichloropropane (1,2,3-TCP) is a state Unregulated Chemical Requiring Monitoring. Both the action level and the DLR are 0.000005 mg/L (5 ng/L).
Due to the extremely low DLR, USEPA methods 502.2, and 524.2 are not applicable for determining this compound in drinking water. Consequently, the Sanitation and Radiation Laboratories (SRL) have developed two GC/MS methods (Purge and Trap GC/MS and Liquid-Liquid Extraction GC/MS) that are capable of 1,2,3-TCP quantification at the DLR.
Laboratories performing an analysis for 1,2,3-TCP may use one of the GC/MS methods above. Alternatively, EPA methods 504.1 or 551.1 may also be used if the laboratory can demonstrate that the method is capable of achieving the DLR of 0.000005 mg/L without method modification.
A laboratory using EPA method 504.1 or 551.1 will be required to do the following:

- Demonstrate that it can achieve the DLR,
- Demonstrate that the blank is not contaminated, and
- Confirm a positive detection that is at or above the DLR either by a second column analysis, or by one of the GC/MS methods above. This confirmation will be required only for the initial characterization of a water source. Confirmation will not be required on subsequent analyses of the same water source.

NOTE: A 1,2,3-TCP finding in a sample that has high TDS or volatile content, or otherwise precludes unambiguous confirmation, should be confirmed with one of the GC/MS methods above.
Certification Requirements
Once PE samples are available from the DHS Drinking Water Program, any laboratory wishing to perform the analysis for 1,2,3-TCP in drinking water must seek interim certification from the Environmental Laboratory Accreditation Program (ELAP) by doing the following. A laboratory must:

- Send in an ELAP application for certification,
- Conduct an initial demonstration of performance/capabilities,
- Provide a validation data package,
- Have a written SOP to demonstrate laboratory capability,
- Successfully analyze a DHS-provided performance evaluation (PE) sample, (two PE testing rounds will be scheduled by DHS during 2003). The PE samples will be distributed by SRL along with instructions for the study.

Upon passing a laboratory inspection by ELAP(to be conducted at the time of the regular site inspection), the laboratory will be granted full certification.
Interim certification may be granted based on the above and the laboratory inspection will be conducted at the time of the regular site visit.
For further details refer to the ELAP web page.
[If you have general certification questions, please call Shinae Park at (510) 540-2800, and for questions related to

this PE study, call SRL at (510) 540-2201.]
Return to Unregulated Contaminants

http://www.dhs.ca.gov/ps/ddwem/chemicals/unregulated/123TCPanalysis.htm

DETERMINATION OF 1,2,3-TRICHLOROPROPANE IN DRINKING WATER BY CONTINUOUS LIQUID-LIQUID EXTRACTION AND GAS CHROMATOGRAPHY/MASS SPECTROMETRY

Edited by: H. S. Okamoto
J. Dhoot
S. K. Perera

February 2002

California Department of Health Services
Division of Drinking Water and Environmental Management
Sanitation and Radiation Laboratories Branch
Berkeley, California 94704

DETERMINATION OF 1,2,3-TRICHLOROPROPANE IN DRINKING WATER BY CONTINUOUS LIQUID-LIQUID EXTRACTION AND GAS CHROMATOGRAPHY/MASS SPECTROMETRY

1. Scope and Application

1.1. This method may be used to determine 1,2,3-trichloropropane (TCP), CAS No. 96-18-4, in water at concentrations below the quantifiable ranges of USEPA methods 504.1, 551.1 and 524.2.

1.2. The linear calibration range for TCP is from 5.0 to at least 500 ng/L. Higher concentrations of TCP have not been tested, as the purpose of this method is trace-level analysis. As a general guide, use methods 504.1 or 551.1 for TCP concentrations =100 ng/L and method 524.2 for TCP concentrations =500 ng/L.

1.3. While the ion trap mass spectrometer (MS) detector was used in the development of this method, the quadrupole MS detector may also be used. To achieve the sensitivity necessary for this method, the ion trap MS must be operated in the selected ion storage (SIS) mode, while the quadrupole MS must be operated in the selected ion monitoring (SIM) mode.

1.4. The applicable matrices include drinking water, ground water and surface water. Although not specifically tested, this method should also be applicable to wastewaters.

1.5. This method is recommended for use by analysts experienced in gas chromatography/mass spectrometry (GC/MS) and in the interpretation of the resulting ion chromatograms and mass spectra. Analysts using this method should be familiar with USEPA method 525.2.

1.6. Disclaimer: Mention of trade names or commercial products in this method does not constitute endorsement or exclusive recommendation for use. Laboratories may make equivalent product substitutions.

2. Summary of Method

2.1. A 1 L sample is extracted for approximately 16 hours (overnight) with methylene chloride using a continuous liquid-liquid extractor. After extraction the methylene chloride extract is isolated, dried, then concentrated to 1 mL and analyzed by GC/MS. TCP is identified by matching the retention time and mass fragment ions from the sample with those of the reference standard. Quantitation is performed by the isotopic dilution procedure. 1,2,3-trichloropropane-D_5 (TCP-D_5) is used as the internal standard, which is added to the samples and standards, such that the final concentrations in the sample extracts and standards are the same.

3. Interferences

3.1. Ensure that all solvents, reagents, glassware and equipment used in the analysis are free from interfering contaminants.

3.2. Organic compounds which coelute or nearly coelute with TCP or TCP-D_5 and which yield the same fragment ions as TCP or TCP-D_5 can be a major source of error. Due to the extreme sensitivity of this method, even low abundances of these ions can result in severe interference when the interfering compound is present at sufficiently high concentration.

4. Safety

4.1. The toxicity or carcinogenicity of chemicals used in this method has not been fully defined. When working with these chemicals, use appropriate protection to eliminate or minimize exposure to these chemicals. Observe and employ other safety precautions described in the material safety data sheets for these chemicals. When operating analytical instruments, observe the manufacturers safety precautions and safe operating procedures.

5. Equipment and Supplies

5.1. Continuous liquid-liquid extractor, one step, for heavier than water solvents, with all glass or PTFE connecting joints, 1 L sample capacity (Corning Pyrex, Accelerated One-Step Modular, or equivalent).
   5.1.1. Recirculating hot water bath, or equivalent, for methylene chloride distillation.
   5.1.2. Recirculating chiller, or equivalent, for the condenser.
5.2. Nitrogen evaporator for solvent evaporation (Organomation, or equivalent)
5.3. Gas chromatograph: Same as described in method 525.2.
   5.3.1. 30 meter x 0.25 mm DB-5ms with a 0.25 µm film thickness (J&W Scientific).
   5.3.2. An alternate column may be used if it provides the required separation and performance for this method.
5.4. Mass spectrometer and data system: Same as described in method 525.2, except the mass spectrometer and data system must be capable of the following.
   5.4.1. Ion trap mass spectrometer: Must be capable of operating in the selected ion storage mode (SIS).
   5.4.2. Quadrupole mass spectrometer: Must be capable of operating in the selected ion mode (SIM).
5.5. Sample containers: 1 L amber glass bottles with PTFE-lined screw-caps. The bottles may be purchased as pre-cleaned, level 2.
5.6. Assorted glass micro-syringes for preparing standards and fortification solutions.
5.7. Assorted volumetric flasks and vials with PTFE-lined screw-caps for the preparation and storage of standards and sample.

6. Reagents and Standards

6.1. Reagent water: free from TCP and other interfering contaminants.
6.2. Methylene chloride, capillary GC/trace analysis grade (Burdick & Jackson, or equivalent).
6.3. Methanol, pesticide grade.
6.4. Sodium sulfate, anhydrous, reagent grade. Heat at 400°C in a muffle furnace for 2 hours before use.
6.5. Primary standard: 1,2,3-Trichloropropane, 200 µg/mL in methanol (Ultra Scientific, or equivalent). Prepare a primary dilution standard in methylene chloride. Use the primary dilution standard to prepare the calibration standards in methylene chloride at the concentrations of 5.0, 10, 25, 50, 100 µg/L, or higher, as required.
6.6. QC solution: 1,2,3-Trichloropropane, 100 µg/mL in methanol (Chem Service, or equivalent). Prepare a 1.0 µg/mL primary dilution standard in methanol. Prepare the QC sample by adding 50 µL of the primary dilution standard to 1 L of reagent water to produce a TCP concentration of 50 ng/L.
6.7. Labeled internal standard: 1,2,3-Trichloropropane-D_5, 98% (Cambridge Isotopes, or equivalent). Ensure that the TCP-D_5 standard contains less than 0.5% of the native compound (TCP). Prepare a stock solution and a primary dilution standard in methanol. Spike all

prepared standards, samples and blanks with the primary dilution standard before conducting the analysis. It is recommended that the amount of TCP-D_5 added should not exceed 50 ng/L in the aqueous samples and 50 µg/L in the working standards.

7. **Sample Collection, Preservation and Storage**
   - 7.1. Collect samples in 1 L amber glass bottles as described in method 525.2.
   - 7.2. If the samples contain residual chlorine, add 50 mg of sodium sulfite to the bottle before sample collection.
   - 7.3. Store samples at 4°C until analysis. Protect from direct sunlight or other bright light sources. The sample storage area must be free from organic solvent vapors.
   - 7.4. All samples must be extracted within 14 days of collection. Analyze the concentrated extracts within 24 hours.

8. **Quality Control**
   - 8.1. An initial demonstration of capability
     - 8.1.1. Prepare and analyze a laboratory reagent blank (LRB) to demonstrate that the preparation procedures, glassware, reagents and instrument system are free from interfering contaminants.
     - 8.1.2. Prepare and analyze seven replicates of a laboratory fortified blank (LFB) containing TCP in the range of 20 to 50 ng/L. The mean recovery should be within 80-120% and the relative standard deviation (RSD) should be =20%.
     - 8.1.3. Perform a method detection limit (MDL) study by preparing and analyzing a minimum of seven replicates of a 5.0 ng/L TCP standard over a period of three days, or more. Calculate the MDL as follows.

       $$MDL = S \times t_{(n-1,\, 1-a=0.99)}$$

       where: S = standard deviation of the replicate analysis.
       t = Student's t value for the 99% confidence level with n-1 degrees of freedom.
       n = number of replicates.

     - 8.1.4. The reporting level should be no less than three times the MDL. A TCP reporting level of 5.0 ng/L requires a MDL of 1.7 ng/L, or less.

   - 8.2. Assessing laboratory performance
     - 8.2.1. Before processing samples, a LRB must be analyzed to demonstrate that all glassware and reagents are free of interfering contaminants. A LRB must be analyzed with each batch of 20 samples, or less, or when reagents are changed. LRB results should be non-detects (<MDL).
     - 8.2.2. Each day that samples are analyzed, a LFB must be analyzed with each batch of 20 samples, or less. Prepare the LFB with a TCP concentration of 5.0 ng/L. The LFB recovery should be within the range of 80–120% of the fortified concentration.
     - 8.2.3. In addition, the integrated areas of the TCP-D_5 responses should be monitored during the day, as another check on system sensitivity.
     - 8.2.4. Analyze at least one sample in duplicate per batch of 20 samples, or less.

8.2.5. At least quarterly, analyze a TCP quality control sample from an external source to assess laboratory performance.

9. Calibration and Standardization

9.1. Calibrate the instrument by analyzing a minimum of five calibration standards in the range of 5.0 to 100 ng/L, or higher, as required.

9.2. The capillary columns and temperature programs listed in Table 1 provide sufficient separation between TCP and TCP-D_5. In addition, the two compounds do not interfere with each other's quantitation ion. Since corrections to isotopic abundances are not required when calculating the isotope ratio of TCP to TCP-D_5, a response factor (similar to the internal standard response factor calculation) for TCP may be calculated as follows.

$$RF = \frac{A_{TCP} Q_{TCP\text{-}D_5}}{A_{TCP\text{-}D_5} Q_{TCP}}$$

where:
A_{TCP} = integrated abundance of the m/z 75 quantitation ion for TCP.
$A_{TCP\text{-}D5}$ = integrated abundance of the m/z 79 quantitation ion for the internal standard, TCP-D_5.
Q_{TCP} = concentration of TCP in ng/L.
$Q_{TCP\text{-}D5}$ = concentration of the internal standard, TCP-D_5, in ng/L.

9.3. Calculate the mean response factor (RF_{mean}) and standard deviation of the five concentration levels. If RSD for the initial calibration exceeds 20%, check for linearity and recalibrate.

9.4. As an alternative to calculating the mean response factor, a linear regression curve may be generated from the initial calibration data by plotting the ratio of $A_{TCP}/A_{TCP\text{-}D5}$ versus Q_{TCP}.

9.5. For continuing calibration, verify the calibration by analyzing a midpoint calibration standard during the course of sample analysis. The RF should be within 20% of RF_{mean} from the initial calibration, or within 20% of the true concentration if the calibration was performed by linear regression. If the RF or measured concentration exceeds 20%, a fresh standard should be prepared and analyzed. If the RF or measured concentration still exceeds 20%, a new calibration curve should be prepared.

9.5.1. Each set of samples must be bracketed by a calibration check standard.

9.5.2. During the continuing calibration, verify that the retention times have not drifted from those set in the quantitation method.

9.5.3. The absolute area of the quantitation ion of the TCP-D_5 in the continuing calibration check standard should not have decreased by more than 20% from the initial calibration. If necessary, make appropriate adjustments to restore system sensitivity.

10. Procedure

10.1. See Table 1 for the instrument and instrument parameter settings that were used in the development of this method.

10.2. Ensure that the extractor is clean and free from contamination before proceeding with sample extraction.

10.3. Add the appropriate volume of methylene chloride (100 mL for the extractor described in Section 5.1) to the extractor's distillation flask, assemble the extractor and extract for approximately 16 hours (overnight).

10.4. To a 1 L aliquot of the sample, add an appropriate aliquot of the TCP-D_5 primary dilution solution and transfer the sample to the extractor.

10.5. After the extraction is completed, dry the methylene chloride extract with anhydrous sodium sulfate and concentrate the extract to 1.0 mL.

10.6. Analyze the sample extract using the instrument parameter guidelines in Table 1.

10.7. TCP is identified by matching the retention time and fragment ions and ion abundances from the sample with those of the reference standard. Identification requires expert judgment, especially when sample components are not completely resolved, or if TCP is present at very low concentration (near the detection limit). Background ions or interfering ions from coeluting compounds may make identification (and quantitation) difficult to achieve.

10.7.1. Ion trap MS: Compare with the "spectrum" of the sample (m/z ranges 74 to 82, 96 to 104 and 109 to 116) with the "spectrum" of the reference standard. Care should be exercised when performing the comparison, as the SIS "spectrum" is composed of three discontinuous "m/z windows" and does not represent the complete spectrum.

10.7.2. Quadrupole MS: Calculate the mean abundance ratio of the m/z 75 ion to the m/z 110 ion of TCP from the initial calibration data. Calculate and compare the abundance ratio of the sample with the reference mean value. The abundance ratio of the sample should compare within ±30% of the reference mean value.

10.8. Monitor the absolute area of the m/z 79 quantitation ion of the TCP-D_5 in samples. A significant increase in area may signify the additive effect of a m/z 79 ion from a coeluting compound.

10.8.1. If using the ion trap MS detector, compare the TCP-D_5 sample "spectrum" with the "spectrum" of the reference standard to help determine if any interfering compound may be present. The TCP-D_5 peak shapes in the extracted ion current profile (EICP) and the total ion current profile (TIC) should also be examined for possible coeluters.

10.8.2. If using the quadrupole MS detector and only the m/z 79 quantitation ion was measured for TCP-D5, examine the TCP-D_5 peak shapes in the EICP and the TIC for possible coeluters, or perform a sample matrix spike (a high TCP-D_5 response due to contribution from an interfering coeluter will result in a calculated TCP spike recovery that will be lower than normal).

10.9. Take appropriate corrective action, as necessary, to correct for interfering compounds.

11. Analysis and Calculations

11.1. Calculate the TCP sample concentration, using the multipoint calibration established in Section 9.

$$C_{TCP} = \frac{A_{TCP} Q_{TCP-D_5}}{A_{TCP-D_5}(RF_{mean})}$$

where:
C_{TCP} = concentration of TCP in ng/L in the water sample
A_{TCP} = integrated abundance of the m/z 75 quantitation ion for TCP.
A_{TCP-D5} = integrated abundance of the m/z 79 quantitation ion for the internal

Standard, TCP-D_5.
$Q_{TCP\text{-}D5}$ = concentration of the internal standard, TCP-D_5, in ng/L.
RF_{mean} = mean response factor of analyte from the initial calibration.

11.2. Alternatively, the TCP sample concentration may be computed from the linear regression curve established in Section 9.

12. Method Performance

12.1. Using reagent water fortified with 5.0 ng/L of TCP (n = 8), a single laboratory, single operator MDL of 0.8 ng/L was achieved for TCP. The mean recovery and relative standard deviation were 111% and 4.8%, respectively. The MDL study was conducted over a period of four days.

12.2. The mean recovery and relative standard deviation for a 50.0 ng/L TCP QC sample (n=9) were 103% and 5.0%, respectively.

12.3. The single laboratory, single operator mean recovery and relative standard deviation for 100 ng/L of TCP-D_5 in reagent water (n=22) were 94% and 15%, respectively.

12.4. The estimated reporting limit for TCP was 5.0 ng/L.

12.5. Six groundwater samples that were analyzed by this extraction method and by the purge and trap GC/MS (ion trap) method were found to contain TCP at concentrations ranging from 8 to 77 ng/L. Linear regression analysis of the results from the purge and trap GC/MS method compared with those obtained from this method resulted in a slope, intercept and correlation (r^2) of 0.932, –0.16 and 0.9914, respectively.

13. References

13.1. U. S. EPA. *Methods for the Determination of Organic Compounds in Drinking Water, Supplement III (Methods504.1, 524.2, 525.2 and 551.1)*; EPA/600/R-95/131; U.S. Environmental Protection Agency, Office of Research and Development: Washington, DC, August 1995.

13.2. "Determination of 1,2,3-Trichloropropane in Drinking Water by Purge and Trap Gas Chromatography/Mass Spectrometry," CA Department of Health Services, Division of Drinking Water and Environmental Management, Sanitation and Radiation Laboratories Branch, Berkeley, CA, February 2002.

14. Acknowledgements

14.1. This method was developed by J. Dhoot, H. Okamoto and S. K. Perera, CA Department of Health Services, Division of Drinking Water and Environmental Management, Sanitation and Radiation Laboratories Branch-North.

Table 1. Instrument and Instrument Parameter Settings Employed in the Development of this Method.

Gas Chromatograph and Autosampler	**Varian Star 3400 CX with 8200 CX AS**	
Injector: Mode Temperature Sample injection volume	 Splitless for 0.7 min. 225 °C 2.0 µL	
Column	30 m x 0.25 mm DB-5ms, 0.25 µm film thickness	
He carrier gas flow rate	1.0 cc/min. (electronic pressure controlled)	
Column oven temperature program	Hold 40°C for 4 min., ramp at 10 °C/min. to 250°C, hold for 5 min. at 250 °C.	
MS transfer line temperature	175 °C	
Retention Time: 1,2,3-Trichloropropane-D_5 1,2,3-Trichloropropane	 ~7.73 min. ~7.83 min.	
Mass Spectrometer	**Varian Saturn 2000 Ion Trap**	**Agilent 5973 Mass Selective Detector ***
Ionization mode	EI, 70 eV, auto-gain control	EI, 70 eV, auto-tune
Filament & electron multiplier: Delay time (off) Start/end times (on) Emission current EM voltage	 7.0 min. 7.0/8.5 min. 100 µA Add +200 V to auto-gain setting, +200 V added by SIS mode.	 7.0 min. 7.0/8.5 min. 34.6 µA Set +300 V higher than for normal full scan mode.
Additional ion trap parameters: Waveform amplitude SIS amplitude adjustment factor Pre-ionization time	 25 V 200 1500 µS	 Not applicable Not applicable Not applicable
Scan mode	Selected ion storage Mass range 1: 74 to 82 Mass range 2: 96 to 104 Mass range 3: 109 to 116	Selected ion monitoring Mass 1: 75 Mass 2: 79 Mass 3: 110

*Note: Parameters taken from Ref. 13.2.

DETERMINATION OF 1,2,3-TRICHLOROPROPANE IN DRINKING WATER BY PURGE AND TRAP GAS CHROMATOGRAPHY/MASS SPECTROMETRY

Edited by: H. S. Okamoto
W. R. Steeber
J. Remoy
P. Hill
S. K. Perera

February 2002

California Department of Health Services
Division of Drinking Water and Environmental Management
Sanitation and Radiation Laboratories Branch
Berkeley, California 94704

DETERMINATION OF 1,2,3-TRICHLOROPROPANE IN DRINKING WATER BY PURGE AND TRAP GAS CHROMATOGRAPHY/MASS SPECTROMETRY

1. Scope and Application

1.1. This method may be used to determine 1,2,3-trichloropropane (TCP), CAS No. 96-18-4, in water at concentrations below the quantifiable ranges of USEPA methods 504.1, 551.1 and 524.2.

1.2. The linear calibration range for TCP is from 5.0 to at least 500 ng/L. Higher concentrations of TCP have not been tested, as the purpose of this method is trace-level analysis. As a general guide, use methods 504.1 or 551.1 for TCP concentrations =100 ng/L and method 524.2 for TCP concentrations =500 ng/L.

1.3. Although similar to USEPA method 524.2, this single analyte method is designed to quantitate TCP at concentrations as low as 5 ng/L. Both the quadrupole mass spectrometer (MS) and the ion trap MS detectors were used in the development of this method. (See Table 1.) To achieve the required sensitivity, the quadrupole MS was operated in the selected ion monitoring (SIM) mode, while the ion trap MS was operated in the selected ion storage (SIS) mode. Under the conditions described in this method, the quadrupole MS achieved better sensitivity than the ion trap MS. Ion trap users are cautioned that quantifying TCP at the 5 ng/L level may not be achievable. (See Section 12 for performance.) However, when using the detector parameters described in this method, the ion trap MS in the SIS mode will generate a "spectrum" that provides better identity confirmation than the quadrupole MS in the SIM mode.

1.4. The applicable matrices include drinking water, ground water and surface water. Although not specifically tested, this method should also be applicable to wastewaters.

1.5. This method is recommended for use by analysts experienced in gas chromatography/mass spectrometry (GC/MS) and in the interpretation of the resulting ion chromatograms and mass spectra. Analysts using this method should also be proficient in using method 524.2

1.6. Disclaimer: Mention of trade names or commercial products in this method does not constitute endorsement or exclusive recommendation for use. Laboratories may make equivalent product substitutions.

2. Summary of Method

2.1. The analysis is performed using purge and trap and GC/MS. TCP is identified by matching the retention time and fragment ions from the sample with those of the reference standard. Quantitation is performed by the isotopic dilution procedure. 1,2,3-trichloropropane-D_5 (TCP-D_5) is used as the internal standard, which is added at the same concentration to the samples and standards.

3. Interferences

3.1. Ensure that all solvents, reagents, glassware and equipment used in the analysis are free from interfering contaminants.

3.2. Volatile organic compounds which coelute or overlap with TCP or TCP-D_5 and which yield the same fragment ions as TCP or TCP-D_5 can be a major source of error. Due to the extreme sensitivity of this method, even low abundances of these ions can result in severe interference

when the interfering compound is present at sufficiently high concentration. Under the conditions described in this method, the following compounds have the potential to interfere.

3.2.1. DB-VRX column: The high abundance m/z 75 ion from *trans*-1,4-dichloro-2-butene, interferes with the TCP m/z 75 quantitation ion, if the two compounds overlap. The low abundance m/z 79 ion from *o*-xylene interferes with the TCP-D_5 m/z 79 quantitation ion, if o-xylene is present at high concentration and overlapping occurs.

3.2.2. DB-5.625 column: At high concentration, the m/z 75 ion from isopropylbenzene interferes with the TCP m/z 75 quantitation ion, if overlapping occurs.

4. Safety

4.1. Observe the safety precautions as described in method 524.2

5. Equipment and Supplies

5.1. Purge and trap concentrator system: Same as the system described in method 524.2. However, the system should be equipped with the following.

5.1.1. 25 mL fritted glass sparger, moisture control device, and heating mantle or similar device to allow heating of the sample in the sparger glassware to 40°C.

5.1.2. The Vocarb 3000 trap (Supelco) was used in the development of this method, but other traps with equivalent performance may be substituted.

5.2. Gas chromatograph: Same as described in method 524.2.

5.2.1. Capillary GC columns used in the development of this method:

5.2.1.1. 30 meter x 0.25 mm DB-5.625 with a 1.0 µm film thickness (J&W Scientific).

5.2.1.2. 60 meter x 0.25 mm DB-VRX with a 1.4 µm film thickness (J&W Scientific).

5.2.1.3. An alternate column may be used if it provides the required separation and performance for this method.

5.3. Mass spectrometer and data system: Same as described in method 524.2, except the mass spectrometer and data system must be capable of the following.

5.3.1. Quadrupole mass spectrometer: Must be capable of operating in the selected ion mode (SIM).

5.3.2. Ion trap mass spectrometer: Must be capable of operating in the selected ion storage mode (SIS).

5.4. Sample containers: 40 mL amber VOA vials with screw-caps containing a PTFE-faced silicone septums. The vials may be purchased as pre-cleaned, level 2.

5.5. Assorted glass micro-syringes for preparing standards and fortification solutions.

5.6. Assorted volumetric flasks and vials with PTFE-lined screw-caps for standards preparation and storage.

6. Reagents and Standards

6.1. Reagent water: Boiled and free from TCP and other interfering contaminants.

6.2. Methanol: Purge and trap grade.

6.3. Primary standard: 1,2,3-Trichloropropane, 5000 µg/mL in methanol (Supelco, or equivalent). Prepare a working stock solution and a primary dilution standard in methanol. Use the primary dilution standard to prepare the aqueous calibration standards at the concentrations of 5.0, 10, 20, 50, 100 ng/L, or higher, as required.

6.4. Labeled internal standard: 1,2,3-Trichloropropane-D_5, 98% (Cambridge Isotopes, or equivalent). Ensure that the TCP-D_5 standard contains less than 0.5% of the native compound

(TCP). Prepare a working stock solution and a primary dilution standard in methanol. Spike all prepared standards, samples and blanks with the primary dilution standard before conducting the analysis. It is recommended that the internal standard concentration in the aqueous working samples should not exceed 50 ng/L.

7. **Sample Collection, Preservation and Storage**
   - 7.1. Collect samples in duplicate in 40 mL amber VOA vials as described in method 524.2.
   - 7.2. If the samples contain residual chlorine, add 25 mg of ascorbic acid to each vial before sample collection.
   - 7.3. Store samples at 4°C until analysis. Protect from direct sunlight or other bright light sources. The sample storage area must be free from organic solvent vapors.
   - 7.4. All samples must be analyzed within 14 days of collection.

8. **Quality Control**
   - 8.1. An initial demonstration of capability
     - 8.1.1. Prepare and analyze a laboratory reagent blank (LRB) to demonstrate that the preparation procedures, glassware, reagents and instrument system are free from interfering contaminants.
     - 8.1.2. Prepare and analyze seven replicates of a laboratory fortified blank (LFB) containing TCP in the range of 20 to 50 ng/L. The mean recovery should be within 80-120% and the relative standard deviation (RSD) should be =20%.
     - 8.1.3. Perform a method detection limit (MDL) study by preparing and analyzing a minimum of seven replicates of a 5.0 ng/L TCP standard over a period of three days, or more. Calculate the MDL as follows.

       $$MDL = S \times t_{(n-1,\, 1-a=0.99)}$$

       where:
       - S = standard deviation of the replicate analysis.
       - t = Student's t value for the 99% confidence level with n-1 degrees of freedom.
       - n = number of replicates.

     - 8.1.4. The reporting level should be no less than three times the MDL. A TCP reporting level of 5.0 ng/L requires a MDL of 1.7 ng/L, or less.
   - 8.2. Assessing laboratory performance
     - 8.2.1. Before processing samples, a LRB must be analyzed to demonstrate that all glassware and reagents are free of interfering contaminants. A LRB must be analyzed with each batch of samples of 10 samples, or less, or when reagents are changed. LRB results should be non-detects (< MDL).
     - 8.2.2. Each day that samples are analyzed, a LFB must be analyzed with each batch of 10 samples, or less. For the GC/MS-quadrupole system, prepare the LFB with a TCP concentration of 5.0 ng/L. For GC/MS-the ion trap system, prepare the LFB with a TCP concentration of 10 ng/L. The LFB recovery should be within the range of 80-120% of the fortified concentration.

8.2.3. In addition, the integrated areas of the TCP-D_5 responses should be monitored during the day, as another check on system sensitivity. (See Section 9.5.3.)
8.2.4. Analyze at least one sample in duplicate per batch of 10 samples, or less.
8.2.5. At least quarterly, analyze a TCP quality control sample from an external source to assess laboratory performance.

9. Calibration and Standardization

9.1. Calibrate the instrument by analyzing a minimum of five calibration standards in the range of 5.0 to 100 ng/L, or higher, as required.

9.2. The capillary columns and temperature programs listed in Table 1 provide sufficient separation between TCP and TCP-D_5. In addition, the two compounds do not interfere with each other's quantitation ion. Since corrections to isotopic abundances are not required when calculating the isotope ratio of TCP to TCP-D_5, a response factor (similar to the internal standard response factor calculation) for TCP may be calculated as follows.

$$RF = \frac{A_{TCP} Q_{TCP-D_5}}{A_{TCP-D_5} Q_{TCP}}$$

where:
A_{TCP} = integrated abundance of the m/z 75 quantitation ion for TCP.
A_{TCP-D5} = integrated abundance of the m/z 79 quantitation ion for the internal standard, TCP-D_5.
Q_{TCP} = concentration of TCP in ng/L.
Q_{TCP-D5} = concentration of the internal standard, TCP-D_5, in ng/L.

9.3. Calculate the mean response factor (RF_{mean}) and standard deviation of the five concentration levels. If the RSD for the initial calibration exceeds 20%, check for linearity and recalibrate.

9.4. As an alternative to calculating the mean response factor, a linear regression curve may be generated from the initial calibration data by plotting the ratio of A_{TCP}/A_{TCP-D5} versus Q_{TCP}.

9.5. For continuing calibration, verify the calibration by analyzing a midpoint calibration standard during the course of sample analysis. The RF should be within 20% of RF_{mean} from the initial calibration, or within 20% of the true concentration if the calibration was performed by linear regression. If the RF or measured concentration exceeds 20%, a fresh standard should be prepared and then rerun. If the RF or measured concentration still exceeds 20%, a new calibration curve should be prepared.
9.5.1. Each set of samples must be bracketed by a calibration check standard or LFB.
9.5.2. During the continuing calibration, verify that the retention times have not drifted from those set in the initial calibration.
9.5.3. The absolute area of the quantitation ion of the TCP-D_5 in the LRB, LFB, and continuing calibration check standard should not have decreased by more than 20% from the initial calibration. If necessary, make appropriate adjustments to restore system sensitivity.

10. Procedure

10.1. See Table 1 for the instruments and instrument parameters that were used in the development of this method.

10.2. Bake out the trap on the purge and trap concentrator for 10 minutes before analyzing any standards or samples.

10.3. Prepare a 25 mL sample aliquot for analysis as in method 524.2, but use TCP-D_5 as the internal standard.

10.4. Analyze the sample as in method 524.2 using the instrument parameters from Table 1 in this method. The instrument parameters in Table 1 should be used as guidelines.

10.5. TCP is identified by matching the retention time and fragment ions and ion abundances from the sample with those of the reference standard. Identification requires expert judgment, especially when sample components are not completely resolved, or if TCP is present at very low concentration (near the detection limit). Background ions or interfering ions from coeluting compounds may make identification (and quantitation) difficult to achieve.

10.5.1. Quadrupole MS: Calculate the mean abundance ratio of the m/z 75 ion to the m/z 110 ion of TCP from the initial calibration data. Calculate and compare the abundance ratio of the sample with the reference mean value. The abundance ratio of the sample should compare within ±30% of the reference mean value.

10.5.2. Ion trap MS: Compare with the "spectrum" of the sample (m/z ranges 74 to 82, 96 to 104 and 109 to 116) with the "spectrum" of the reference standard. Care should be exercised when performing the comparison, as the SIS "spectrum" is composed of three discontinuous "m/z windows" and does not represent the complete spectrum.

10.6. Monitor the absolute area of the m/z 79 quantitation ion of the TCP-D_5 in samples. A significant increase in area may signify the additive effect of a m/z 79 ion from a coeluting compound.

10.6.1. If using the ion trap MS detector, compare the TCP-D_5 sample "spectrum" with the "spectrum" of the reference standard to help determine if any interfering compound may be present. The TCP-D_5 peak shapes in the extracted ion current profile (EICP) and the total ion current profile (TIC) should also be examined for possible coeluters.

10.6.2. If using the quadrupole MS detector and only the m/z 79 quantitation ion was measured for TCP-D5, examine the TCP-D_5 peak shapes in the EICP and the TIC for possible coeluters, or perform a sample matrix spike (a high TCP-D_5 response due to contribution from an interfering compound will result in a calculated TCP spike recovery that will be lower than normal).

10.6.3. Take appropriate corrective action, as necessary, to correct for interfering compounds.

11. Analysis and Calculations

11.1. Calculate the TCP sample concentration, using the multipoint calibration established in Section 9.

$$C_{TCP} = \frac{A_{TCP} Q_{TCP-D_5}}{A_{TCP-D_5}(RF_{mean})}$$

where:

C_{TCP} = concentration of TCP in ng/L in the water sample

A_{TCP} = integrated abundance of the m/z 75 quantitation ion for TCP.

A_{TCP-D5} = integrated abundance of the m/z 79 quantitation ion for the internal Standard, TCP-D_5.

Q_{TCP-D5} = concentration of the internal standard, TCP-D_5, in ng/L.

RF_{mean} = mean response factor of analyte from the initial calibration.

11.2. Alternatively, the TCP sample concentration may be computed from the linear regression line established in Section 9.

12. Method Performance

12.1. GC/MS-quadrupole (System 1 in Table 1): Single laboratory, single operator.

12.1.1. A MDL study (n=7) conducted over a period of three days using reagent water fortified with 5.0 ng/L of TCP resulted in a calculated MDL of 0.9 ng/L. The mean recovery and relative standard deviation were 104% and 5.6%, respectively.

12.1.2. The estimated reporting limit was 5.0 ng/L.

12.1.3. The mean recovery and relative standard deviation for LFB samples (n=8) containing 50.0 ng/L of TCP were 97% and 4.2%, respectively.

12.2. GC/MS-ion trap (System 2 in Table 1): Single laboratory, single operator performance (lab and operator different from 12.1).

12.2.1. A MDL study (n=8) conducted over a period of three days using reagent water fortified with 5.0 ng/L of TCP resulted in a calculated MDL of 2.3 ng/L. The mean recovery and relative standard deviation were 101% and 15%, respectively.

12.2.2. The estimated reporting limit was 10 ng/L.

12.2.3. The mean recovery and relative standard deviation for QC samples (n=18) containing 20.0 ng/L of TCP were 98% and 10%, respectively.

12.2.4. The mean recovery and relative standard deviation for LFB samples (n=10) containing 20.0 ng/L of TCP were 94% and 11%, respectively.

12.3. Fifteen groundwater samples that were analyzed on both the GC/MS-quadrupole and the GC/MS-ion trap systems were found to contain TCP at concentrations ranging from 8 to 300 ng/L. Linear regression analysis of the measurement results from the GC/MS-quadrupole system compared with those from the GC/MS-ion trap system resulted in a slope, intercept and correlation (r^2) of 0.985, 2.39 and 0.9981, respectively.

13. References

13.1. U. S. EPA. *Methods for the Determination of Organic Compounds in Drinking Water, Supplement III (Methods504.1, 524.2 and 551.1)*; EPA/600/R-95/131; U.S. Environmental Protection Agency, Office of Research and Development: Washington, DC, August 1995.

14. Acknowledgements

14.1. The GC/MS-ion trap method was developed by J. Remoy, J. Dhoot, H. S. Okamoto and S. K. Perera, CA Department of Health Services, Division of Drinking Water and Environmental Management, Sanitation and Radiation Laboratories Branch-North. The GC/MS-quadrupole method was developed by P. Hill and W. R. Steeber, CA Department of Health Services, Division of Drinking Water and Environmental Management, Sanitation and Radiation Laboratories Branch-South.

Table 1. Instruments and Parameter Settings Employed in the Development of this Method.

	System 1	System 2
Purge and Trap Concentrator	**Tekmar 3000 with Dry Purge and Sample Heater Jacket**	**Tekmar 3000 with Dry Purge and Sample Heater Jacket**
Sample volume	25 mL	25 mL
1,2,3-Trichloropropane-D_5 (internal standard) spike concentration in sample	400 ng/L	40 ng/L
Purge: Vessel type Time & temperature Gas flow rate Dry purge time	 25 mL fritted glass sparger? 11 min. at 40°C 40 cc/min. 2 min.	 25 mL fritted glass sparger 11 min. at 40°C 40 cc/min. 5 min.
Trap: Desorb preheat temperature Desorb time & temperature Gas flow rate Bake out time & temperature	 245°C 4 min. at 250°C 20 cc/min. 8 min. at 270°C	 245°C 4 min. at 250°C 30 cc/min. 10 min. at 260°C
Gas Chromatograph	**Agilent 6890**	**Varian CP-3800**
Injector: Split interface Temperature	 20:1 200°C	 20:1 200°C
Column	30 m x 0.25 mm DB-5.625, 1.0 µm film thickness	60 m x 0.25 mm DB-VRX, 1.4 µm film thickness
He carrier gas flow rate	0.90 cc/min.	1.5 cc/min.
Column oven temperature program	Hold 35°C for 5 min., ramp at 4.0 °C/min. to 105°C, ramp at 30 °C/min. to 170°C.	Hold 45°C for 10 min., ramp at 12 °C/min. to 190°C, ramp at 6°C/min. to 225°C.
Retention Time: 1,2,3-Trichloropropane-D_5 1,2,3-Trichloropropane	 ~20.36 min. ~20.58 min.	 ~20.86 ~20.95
Mass Spectrometer	**Agilent 5973 MSD**	**Varian Saturn 2000 Ion Trap**
Ionization mode	EI, 70 eV, auto-tune	EI, 70 eV, auto-gain control
Filament & electron multiplier: Delay time (off) Start/end times (on) Emission current EM voltage	 19 min. 19.0/22.0 min 34.6 µA Set +300 V higher than for normal full scan mode.	 19 min. 19.0/22.0 min. 100 µA Add +200 V to auto-gain setting, +200 V added by SIS mode.
Additional ion trap parameters: Waveform amplitude SIS amplitude adjustment factor Pre-ionization time	 Not applicable Not applicable Not applicable	 25 V 200 1500 µS
Scan mode	Selected ion monitoring Mass 1: 75 Mass 2: 79 Mass 3: 110	Selected ion storage Mass range 1: 74 to 82 Mass range 2: 96 to 104 Mass range 3: 109 to 116

Appendix A-9
Semivolatile Organic Compounds

USEPA REGION 9 LABORATORY
RICHMOND, CALIFORNIA

STANDARD OPERATING PROCEDURE #315

SEMIVOLATILE ORGANICS ANALYSIS

Signature & Title

Prepared by: _____ _____
Li-Pin Lee, ESAT Region 9, ICF Consulting Date

Reviewed by: _____ _____
Richard Bauer, Chemistry Team Leader Date

Approved by: _____ _____
Brenda Bettencourt, Lab. Director Date

Periodic Review:

Signature	Title	Date

STANDARD OPERATING PROCEDURE #315

SEMIVOLATILE ORGANICS ANALYSIS

This SOP was prepared by ICF Consulting for the United States Environmental Protection Agency (USEPA) under the Environmental Services Assistance Team (ESAT) contract (EPA contract No. 68D60005).

APPROVED BY:

Ziyad Rajabi, Organic Group Leader	Date
Surender Kaushik, QA/QC Task Manager	Date
Jerry Vail, ESAT Program Manager	Date

ESAT Document Control Number: B0101063-1371

TABLE OF CONTENTS

1 SCOPE AND APPLICATION 4

2 METHOD SUMMARY 4

3 DEFINITIONS 4

4 HEALTH & SAFETY 6

5 SAMPLE HANDLING AND PRESERVATION 7

6 INTERFERENCES 7

7 APPARATUS AND MATERIALS 7

8 QUALITY CONTROL 9

9 ANALYTICAL PROCEDURES 27

10 DOCUMENTATION 31

11 REFERENCES 37

APPENDIX A 38

APPENDIX B 40

APPENDIX C 42

APPENDIX D 44

APPENDIX E 46

ATTACHMENT A - Semivolatile Organics Run Log example page

ATTACHMENT B - GC/MS Semivolatile Standards Log example page

ATTACHMENT C - Maintenance Logbook example page

1 SCOPE AND APPLICATION

This Standard Operating Procedure (SOP) describes the procedures used for the analysis of selected semivolatile organic compounds by Gas Chromatography/Mass Spectrometry (GC/MS) in extracts prepared from solid or liquid samples by EPA SW-846 extraction and cleanup methods appropriate to the analytes of interest. This SOP is based on procedures contained in EPA Method SW-846 8270.

The applicability of these procedures to specific project data quality objectives must be assessed on a case by case basis. The QC criteria specified in the procedures do not meet compliance criteria for either drinking water or NPDES monitoring projects.

2 METHOD SUMMARY

Sample extracts, which have been fortified with surrogate analytes and internal standards, are injected into a gas chromatograph with a Mass Spectrometer (MS). Analytes are separated in the narrow-bore fused-silica capillary gas chromatographic column during temperature programming, then detected by the MS.

Target semivolatile organic compounds are identified in the sample extract by comparing the mass spectra and GC retention times of the target analytes to the mass spectra and retention times of standards analyzed under the same conditions as samples. A response factor is established for each target and surrogate compound during the initial calibration by comparing the MS response of the quantitation ion produced by the target and surrogate compounds to the MS response for the quantitation ion produced by the associated internal standard. Each target analyte and surrogate are quantitated using an internal standard method of calculation using the average response factors from the initial calibration.

Non-target compounds are identified by comparing the resulting mass spectra of the non-target compound to the mass spectra contained in the National Institute of Standards and Technology (NIST) Library in the MS database. An estimated quantitation is performed for the non-target compounds by comparing the total MS response to the nearest internal standard total MS response, assuming a 1:1 response factor.

3 DEFINITIONS

3.1 Internal Standard (IS) - A pure analyte added to a sample, extract, or standard solution in a known amount and used to measure the relative responses of other method analytes and surrogates that are components of the same solution.

3.2 Surrogate Analyte (SA) - A pure analyte, which is extremely unlikely to be found in any sample, which is added to a sample aliquot in a known amount before extraction or other processing, and is measured with the same procedures used to measure other sample components. The purpose of the SA is to monitor method performance with each sample.

3.3 Laboratory Reagent Blank (LRB) - An aliquot of reagent water, sand, or sodium sulfate that is treated exactly as a sample including exposure to all glassware, equipment, solvents, and surrogates that are used with other samples. The LRB is used to determine if method analytes or other interferences are present in the laboratory environment, the solvents, or the equipment.

3.4 Laboratory Fortified Blank (LFB) - An aliquot of reagent water, sand, or sodium sulfate to which known quantities of the method analytes are added. The LFB is treated exactly as a sample. The LFB is used to determine whether the methodology is in control and to indicate the accuracy associated with laboratory procedures.

3.5 Laboratory Fortified Sample Matrix (LFM) and Laboratory Fortified Sample Matrix Duplicate (LFMD) - Two aliquots of the same sample to which known quantities of the method analytes are added. The LFM and LFMD are treated exactly as samples. The LFM and LFMD are used to determine whether the sample matrix contributes bias to sample results and to measure the precision associated with laboratory procedures

3.6 GC/MS Performance Check Solution (decafluorotriphenylphosphine (DFTPP) - A solution of DFTPP, 4,4'-DDT, pentachlorophenol, and benzidine used to evaluate the performance of the GC/MS system with respect to a defined set of method criteria.

3.7 Stock Standard Solution (SSS) - A concentrated solution containing one or more method analytes prepared in the laboratory using assayed reference materials purchased from a commercial source.

3.8 Primary Dilution Standard Solution (PDS) - A solution of several analytes prepared in the laboratory from stock standard solutions and diluted as needed to prepare calibration solutions and other needed analyte solutions.

3.9 Calibration Standard (CAL) - A solution prepared from the primary dilution standard or stock standard solution and the internal standard and surrogate analytes. The CAL solutions are used to calibrate instrument response with respect to analyte concentration

3.10 Quality Control Sample (QCS) – Equivalent to the mid-point initial calibration solution but prepared from a source different from the source of calibration standards. The QCS is used to check the accuracy of the initial calibration solutions.

3.11 Quantitation Limit Standard (QLS) - The lowest level CAL solution. The QLS is used to verify analytical system response at the quantitation limit.

3.12 System Performance Check Compounds (SPCC) - analytes that typically have low response factors. These compounds are used as indicators of deteriorating system performance.

3.13 Calibration Check Compounds (CCC) - analytes that may show high variability if there are system leaks or reactive sites on the column. These compounds are used as indicators of deteriorating system performance.

4 HEALTH & SAFETY

4.1 The toxicity or carcinogenicity of each reagent used in this method has not been precisely defined; however, each chemical compound should be treated as a potential health hazard. From this viewpoint, exposure to these chemicals should be minimized through the use of personal protective equipment and laboratory engineering and design. A reference file of material safety data sheets (MSDS) is available to all personnel involved in the chemical analysis and can be found in the library (Room 118) or Room 413.

4.2 Methylene chloride is a suspected carcinogen. Effects of overexposure: Acute inhalation or ingestion causes mild central nervous system depression. The primary toxic effect is narcosis. Other toxic effects are pulmonary edema, encephalopathy, and hemolysis. Methylene chloride irritates the eyes, skin, and respiratory tract. No systemic effects have been reported in humans, although excessive concentrations have caused cancer and liver and kidney damage in animals. Emergency and first aid - Inhalation: immediately remove to fresh air. If not breathing, administer mouth-to-mouth rescue breathing. If there is no pulse, administer cardiopulmonary resuscitation (CPR). Contact physician immediately. Eye contact: rinse with copious amounts of water for at least 15 minutes. Get emergency medical assistance. Skin contact: flush thoroughly for at least 15 minutes. Wash affected skin with soap and water. Remove contaminated clothing and shoes. Wash clothing before re-use, and discard contaminated shoes. Get emergency medical assistance. Ingestion: call local poison control center for assistance. Contact physician immediately. Never induce vomiting or give anything by mouth to a victim unconscious or having convulsions.

4.3 Some method analytes have been tentatively classified as known or suspected human or mammalian carcinogens. Stock standard solutions of these compounds must be prepared in a

fume hood. Routine procedures in this SOP do not require contact with concentrated solutions or neat materials. All standard preparation procedures associated with this SOP should be performed in a fume hood wearing protective clothing (lab coats) and safety glasses.

5 SAMPLE HANDLING AND PRESERVATION

5.1 Sample extracts for GC/MS analysis are received from the extraction lab personnel and custody is transferred to the GC/MS laboratory staff. The GC/MS analyst acknowledges the receipt of the sample extracts by signing the appropriate sections in the extraction logbook. Copies of tracking sheets, chain-of-custody records, extraction logbook pages, and percent solids determination records should accompany the sample extracts.

5.2 The extracts are marked with the Region 9 Laboratory number, which can be checked against the tracking sheets and chain-of-custody record to determine the Client sample number, Case number, and Sample Delivery Group (SDG) number.

5.3 Store extracts in the refrigerator in Room 406 at 4 $\pm$ 2°C. Extracts must be analyzed within 40 days of extraction.

5.4 Store extracts in the refrigerator in Room 406 at 4 $\pm$ 2°C following analysis and submission of the data deliverables for an SDG an additional 90 days before segregating for disposal.

6 INTERFERENCES

6.1 Method interferences can be caused by contaminants in solvents, reagents, glassware, and other sample processing apparatus. Phthalates are commonly found as laboratory contaminants. The analytical system must be demonstrated to be free from interferences under the conditions of the analysis by running a laboratory reagent blank as described in Section 9. The use of non-polytetrafluoroethylene (PTFE) tubing, non-PTFE thread sealants, or flow controllers with rubber components should be avoided.

6.2 Contamination by carryover can occur whenever high level and low level samples are sequentially analyzed. Splitless injection port liners must be cleaned carefully or replaced as needed. After analysis of a sample containing high concentrations of compounds, a laboratory instrument blank should be analyzed to ensure that accurate values are obtained for the next sample.

6.3 It is important that samples and standards be contained in the same solvent, i.e., the solvent for final working standards must be the same as the final solvent used in sample preparation. If this is not the case, chromatographic comparability of standards to sample may be affected.

7 APPARATUS AND MATERIALS

7.1 GCMS System

7.1.1 Gas Chromatograph (GC): Hewlett Packard 5890 Series 2 or equivalent capable of multilevel temperature programming and constant carrier gas flow throughout the temperature range. The GC should be equipped with an automatic sample injector, splitless injection port, and Electronic Pressure Control (EPC).

7.1.2 GC column: 30 m, 0.25 mm ID, 0.25 μm df, DB-5MS or equivalent. A fused silica capillary column with a bonded phase coating of 5% phenyl-95% methyl silicone such as DB-5, DB-5MS, Rtx-5, XTI-5, or HP-5. The use of a short (5 m) length of a deactivated, uncoated fused silica column (guard column) between the injection port and the analytical column, to trap nonvolatile extract residues, is optional.

7.1.3 Mass spectrometer: Hewlett Packard 5972 or equivalent. Capable of scanning from 35 to 500 amu every one second or less using 70 volts (nominal) electron energy in the electron impact ionization mode. Must be able to produce a mass spectrum that meets acceptance criteria when 50 ng of DFTPP is injected through the GC inlet.

7.1.4 Data system: HP EnviroQuant ChemStation G1701BA Version B.01.00 or equivalent. Able to control the GC/MS system and to acquire, store, and reduce mass spectral data. The software must be able to process any GC/MS data file by recognizing a GC peak within a retention time window, comparing the mass spectrum from the GC peak with spectral data in a data base, and generate a list of tentatively identified compounds with their retention times and scan numbers. The software must also allow integration of the ion abundance of any specific ion between specified time or scan number limits and to calculate response factors and concentrations of analytes in samples.

7.2 Standard solutions

Document the preparation of all standards in the Semivolatile Standards logbook following EPA Region 9 Laboratory SOP # 840, Notebook Documentation and Control.

7.2.1 Internal Standard Solution (IS) - A solution of acenaphthene-d_{10}, phenanthrene-d_{10}, chrysene-d_{12}, 1,4-dichlorobenzene-d_4, perylene-d_{12}, and naphthalene-d_8 at 2,000 μg/mL each in dichloromethane. Restek catalog # 31206 or equivalent.

7.2.2 Surrogate solution (SA) - A solution of 2-fluorobiphenyl, nitrobenzene-d_5, p-terphenyl-d_{14}, and 1,2-dichlorobenzene-d_4 (B/N surrogates) at 100 μg/mL each and 2-fluorophenol, phenol-d_5, 2,4,6-tribromophenol, and 2-chlorophenol-d_4 (Acid surrogates) at 150 μg/mL each in dichloromethane. Prepare by diluting purchased

solutions - B/N surrogates: Restek catalog# 31002 or equivalent. Acid surrogates: Restek catalog# 31003 or equivalent.

7.2.3 Calibration Stock Standard. A solution of target analytes listed in Appendix B at a concentration of 2,000 µg/mL in dichloromethane. Restek SV calibration mix #2 (cat# 31008), #3 (cat# 31009), #4 (cat# 31010), #5 (cat# 31011), #7 (cat# 31013), and #8 (cat# 31026) or equivalent.

7.2.4 Calibration standards - A solution of target analytes listed in Appendix B at concentrations of 10, 25, 40, 60, and 80 µg/mL. Prepare by diluting from the calibration stock standard. Add 10 µL of the IS solution per 1.0 mL of standard.

7.2.5 GC/MS Performance Check Solution (DFTPP+). A solution of decafluorotriphenylphosphine (DFTPP), 4,4'-DDT, pentachlorophenol, and benzidine at 50 ng/µL each in methylene chloride. Prepare from a purchased solution - ULTRA Scientific cat# GCM-150 or equivalent.

7.2.6 Matrix Fortification Solution - A solution of 1,2,4-Trichlorobenzene, Acenaphthene, 2,4-Dinitrotoluene, Pyrene, n-Nitroso-di-n-propylamine, and 1,4-Dichlorobenzene (B/N spike mix) at 100 µg/mL each and Pentachlorophenol, Phenol, 2-Chlorophenol, 4-Chloro-3-methylphenol, and 4-Nitrophenol (Acid spike mix) at 150 µg/mL each in methanol. Prepare from purchased solutions - B/N spike mix: Restek catalog# 31004 or equivalent. Acid spike mix: Restek catalog# 31005 or equivalent.

7.2.7 Storage of Standard Solutions - Store the unopened ampulated stock standard solutions at 4°C (± 2°C). Store all other working standard solutions in glass bottles or vials with Teflon lined screw caps at ≤-10°C and protect all standards from light. Fresh standards should be prepared every six months, or sooner if comparison with check standards indicates a problem. The standard solution must be checked frequently for stability. Replace all working standard solutions after six months, or sooner if comparison with quality control check samples indicates a problem. CAUTION: Analysts must allow all standard solutions to equilibrate to room temperature before use.

7.2.8 Methylene chloride -- High purity pesticide quality or equivalent.

7.2.9 Helium carrier gas - as contaminant free as possible.

7.3 Syringes (10-µL, 25-µL, 50-µL, 100-µL, 250-µL, 500-µL, 1-mL).

8 QUALITY CONTROL

8.1 Quality control requirements include the initial demonstration of laboratory capability followed by regular analyses of laboratory reagent blanks, laboratory fortified blanks, and laboratory fortified matrix samples.

8.2 The laboratory must perform an initial demonstration of capability with each sample preparation technique used in analyzing analytes of interest with this SOP before analyzing any samples. See EPA Region 9 SOP #880, *Initial and Continuing Demonstration of Capabilities and Proficiency* for requirements and procedures.

8.2.1 Analyze Laboratory Fortified Blanks (LFBs) containing all the analytes of interest at a concentration of 40 µg/L in aqueous samples and 1320 µg/Kg in solid samples, equivalent to 40 µg/mL in the extract, to demonstrate initial laboratory capability.

8.2.2 Analyze LFBs which have been fortified with all analytes of interest at 10 µg/L in water samples and 330 µg/Kg in soil samples, corresponding to 10 µg/mL in the extract for MDL determination.

8.3 Mass calibration.

8.3.1 Calibrate the mass axis of the mass spectrometer daily. You must also calibrate the mass axis whenever the mass spectrometer is shut down, or whenever there is a mass mis-assignment. Mass calibration is performed to ensure the accurate assignment of masses to ions generated in the ion volume of the mass spectrometer. Perfluorotributylamine (FC43) is used to perform calibration of the mass axis. The FC43 spectrum with the following criteria are recommended:

Mas s	Target % of Mass 69
69	100
131	25.0 - 40.0
219	25.0 - 40.0
414	1.4 - 4.0
502	0.5 - 2.0

8.3.2 Take corrective action if the FC43 spectrum does not meet the criteria listed above as DFTPP will probably not pass criteria. The corrective action may be as simple as

adjusting the mass gain and peak width or manually retuning the MS. Alternatively, retuning the MS by selecting target tune with mass ratio(s) set based on the failure on criteria in Section 8.4.4. If retuning the MS does not produce adequate FC43 spectra or repeated failure to meet DFTPP criteria, further maintenance such as cleaning the ion source may be required. See Section 9.4.

8.4 GC/MS System Performance Check

8.4.1 Prior to the analysis of any calibration standards, blanks, and samples (including LFM/LFMDs), the GC/MS system must meet the mass spectral ion abundance criteria for DFTPP. Proper tuning of the instrument is necessary to produce standardized fragmentation patterns of target and non-target compounds.

8.4.2 Frequency of GC/MS Performance Check.

8.4.2.1 Analyze the DFTPP solution once at the beginning of each 12-hour period during which standards, blanks and samples are to be analyzed. The twelve-hour time period begins at the moment of injection of the DFTPP solution. The time period ends after twelve hours have elapsed. If a sample is injected after the 12-hour time period has elapsed it must be re-analyzed.

8.4.3 Analyze the DFTPP solution according to Section 9 of this SOP.

8.4.4 The ion abundance ratios must meet the following criteria:

Mass (m/z)	Relative Ion Abundance Criteria
51	30 - 60% of the base peak
68	less than 2% of mass 69
70	less than 2% of mass 69
127	40 -60% of the base peak
197	less than 1% of mass 198
198	Base peak (100% relative abundance)
199	5 - 9% of mass 198
275	10 - 30% of the base peak
365	Greater than 1% of the base peak
441	Present but less than mass 443
442	Greater than 40% of mass 198
443	17 - 23% of mass 442

8.4.4.1 If the ion abundances fail to meet the criteria listed above the DFTPP chromatogram should be examined for any obvious chromatographic problems (e.g., bad injection leading to poor response etc.) If the problem is determined to be related to poor chromatography, take the necessary corrective action and re-analyze the DFTPP. If the DFTPP continues to fail the ion abundance criteria, retune the mass spectrometer. It may also be necessary to clean the ion source or take other corrective action to achieve the ion abundance criteria. See Section 9.4.

8.4.4.2 Evaluate the breakdown of DDT using Equation 1. Locate the degradation products of 4,4'-DDT (4,4'-DDD and 4,4'-DDE). If the percent breakdown calculated using peak areas based on each Quantitation ion (Qion) exceeds 20%, corrective maintenance must be taken

Equation 1:

$$\%\ 4,4'\text{-DDT Breakdown} = \frac{\text{Total Qion Area (DDE + DDD)}}{\text{Total Qion Area (DDE + DDD + DDT)}} \times 100$$

Qions of DDE: 246 dalton, DDD: 235 dalton, DDT: 235 dalton

8.4.4.3 Benzidine and pentachlorophenol responses should be at their expected levels in the DFTPP solution and peak tailing should be minimal. Replacing the inlet liner and /or the inlet seal and breaking off a portion of the column from the injector end should restore instrument performance.

8.5 Initial calibration.

8.5.1 Calibrate the GC/MS system whenever corrective action which may change instrument response (e.g., ion source cleaning, column replacement, etc.) is performed or if the continuing calibration acceptance criteria have not been met.

8.5.2 Analyze the 10 or 25 μg/mL calibration standard according to Section 9.

8.5.2.1 Evaluate the separations of anthracene /phenanthrene and benzo(a)anthracene/chrysene. Anthracene /phenanthrene should have baseline separation. Benzo(a)anthracene/chrysene should be separated by a valley whose height is less than 25% of the average height of the two peaks. If not, the GC column requires maintenance.

8.5.2.2 If any target analytes, surrogates or internal standards are mis-identified or not found, corrective action or system maintenance is required.

8.5.3 If all performance criteria are met, analyze the remaining initial calibration standards according to Section 9 of this SOP.

8.5.4 The data system calculates the relative response factor (RRF) for each target compound and surrogate for all five calibration standards using Equation 2. The quantitation ions and internal standard assignments are listed in Appendix C.

Equation 2:

$$RRF = \frac{A_x \times C_{is}}{A_{is} \times C_x}$$

Where

A_x = Area of quantitation ion of compound x
A_{is} = Area of quantitation ion for associated internal standard
C_x = Concentration of compound x in μg/mL
C_{is} = Concentration of the associated internal standard in μg/mL

8.5.5 Calculate the average RRF for all analytes

8.5.6 Calculate the percent relative standard deviation (%RSD) of the RRF values for each compound using Equation 3.

Equation 3

$$\%RSD = (SD / RRF_{avg}) \times 100$$

$$SD = \sqrt{\frac{\sum_{i=1}^{n} (x_i - x_{ave})^2}{n-1}}$$

8.5.7 Check the initial calibration for misidentified peaks due to retention time shifts. The most commonly mis-assigned compounds are the 1,3- and 1,4-dichlorobenzenes and the benzo(b) and benzo(k) fluoranthenes.

8.5.8 Verify that the minimum average RRF's in the initial calibration for the following system performance check compounds (SPCC's) is 0.050:

N-nitroso-di-n-propylamine
hexachlorocyclopentadiene
2,4-dinitrophenol
4-nitrophenol

Corrective action must be taken before sample analysis can begin if any SPCC fails the minimum RRF criterion.

8.5.9 All other analytes must meet the minimum RRF criteria in Appendix C.

8.5.10 Verify that the maximum %RSD for the following calibration check compounds (CCC's) in the initial calibration is ≤ 20:

acenaphthene	4-chloro-3-methylphenol
1,4-dichlorobenzene	2,4-dichlorophenol
hexachlorobutadiene	2-nitrophenol
di-n-octyl phthalate	phenol
fluoranthene	pentachlorophenol
benzo(a)pyrene	2,4,6-trichlorophenol

Corrective action must be taken before sample analysis can begin if any CCC fails the maximum %RSD criterion.

8.5.11 All other analytes should meet the maximum %RSD of 20. Any project specific analyte of interest must meet the maximum %RSD criterion. If one or more analytes exceed the RSD limit, the initial calibration may still be acceptable if the following conditions are met:

8.5.11.1 The %RSD of the analytes that exceed the limit is ≤ 30.

8.5.11.2 The mean of the RSD values for all analytes is less than or equal to 20%.

8.5.11.3 If an analyte that exceeds the %RSD limit is found in a sample extract, that extract must be re-analyzed using an initial calibration that meets QC limits for that analyte.

8.5.12 If an ICAL fails because of one standard, a fresh solution of that standard may be re-analyzed and substituted for the failed one in the ICAL. If more than one standard fails, corrective action is required before sample analysis begins.

8.5.13 If the five point calibration fails the minimum RRF or maximum %RSD criteria for target analytes with on column quantitation limits of 25 ng listed in Appendix D, then a four-point calibration, excluding the 10 μg/mL standard, may be used if it meets the initial calibration criteria.

8.5.14 Remember that the lowest concentration standard defines the reporting limit for each compound. If appropriate reporting limits cannot be obtained by this procedure, the system must be repaired so that the criteria are satisfied before any samples are analyzed. If repairs are made to the system, then a new initial calibration must be performed.

8.5.15 No quantitation ion may saturate the detector.

8.5.16 Analyze a QCS sample immediately after each initial calibration. The RRF for each analyte in the QCS must be within 30% of the mean RRF in the initial calibration. If the QCS sample fails, the cause must be determined and corrected before analysis of samples can proceed.

8.5.17 If the initial calibration and the QCS meet the specified criteria, the remainder of the 12-hour analytical period may be used for the analysis of field and QC samples, using the average RRF from the initial calibration to quantitate the sample data.

8.5.18 Manual integration. There will be instances when the data system will not produce accurate integrations. Examples of this are misidentification of a peak, inaccurate dropping of a perpendicular between peaks, or failure to integrate the entire tail of a peak. When necessary, chromatograms can be manually integrated if the following steps are taken (see SOP 835, *Chromatographic Integration Procedures*):

8.5.18.1 Print a view of the chromatogram to be reintegrated using QEDIT. Include the background-subtracted spectrum of the apex of the peak and the reference spectrum. Indicate the reasons for manually integrating the chromatographic results on the chromatogram and initial and date the statement.

8.5.18.2 Reintegrate the peak and print the new view. Save the reintegrated value(s). Print the peak and reference spectra. Document the manual integration on the reintegrated chromatogram and initial and date the statement.

8.5.18.3 Print the new quant report and chromatogram after all manual integrations have been completed. Indicate each manual integration on the new quant report. Document the fact that there was manual integration in the instrument's run log and initial and date the statement.

8.5.18.4 Show the chromatograms, quant reports and log book to a supervisor, QA/QC coordinator or team leader for review and acceptance. The QA/QC coordinator or team leader will initial and date the integrations.

8.6 Calibration Verification

8.6.1 Verify the MS tune and initial calibration at the beginning of each 12-hour period (see Section 8.4.2.1 for definition of 12-hour time period) when analyses of field and QC samples are performed using the following procedure.

8.6.2 Analyze a DFTPP+ solution according to Section 9

8.6.2.1 Check that the DFTPP ion abundances meet the criteria in Section 8.4.4

8.6.2.2 Evaluate the DDT breakdown using the Equation 1 and the acceptance criteria in Section 8.4.4.2.

8.6.2.3 Evaluate the benzidine and pentachlorophenol responses according to the criteria in section 8.4.4.3.

8.6.3 Analyze the calibration verification standard (25 μg/mL) according to Section 9 of this SOP.

8.6.4 The responses of the internal standards in the calibration verification standard must meet the criteria in Section 8.11.2.

8.6.5 Check the calibration verification for misidentified peaks due to retention time shifts. The most commonly mis-assigned compounds are closely eluting pairs such as the benzo(b) and benzo(k)fluoranthenes. If any are found, corrective action must be taken and the chromatogram re-quantitated to ensure the corrective action was successful.

8.6.6 Calculate the relative response factor (RRF) for each target compound and surrogate using Equation 1. The quantitation ions and internal standard assignments are listed in Appendix C.

8.6.7 Calculate the percent difference (%D) between the continuing calibration RRF's and the average RRF's from the most recent initial calibration for each target compound and surrogate using Equation 4.

Equation 4

$$\%D = \frac{RRF_c - \text{avg } RRF_i}{\text{avg } RRF_i} \times 100$$

Where :

RRFc = relative response in the continuing calibration
Avg RRFi = average relative response in the initial calibration

8.6.8 Verify that the minimum RRF for the SPCC's listed in section 8.5.8 is 0.050.

8.6.9 All other analytes must meet the minimum RRF's listed in Appendix B.

8.6.10 Verify that the maximum %D for the CCC's listed in section 8.5.10 is ≤ 25.

8.6.11 All other analytes must meet the maximum %D criteria listed in Appendix B.

8.6.12 All project specific analytes of interest must meet the minimum RRF and maximum %D criteria in Appendix B. If one or more analytes exceed the minimum RRF and maximum %D limit, the calibration verification may still be acceptable if the following conditions are met:

8.6.12.1 The %D of the analytes that exceed the limit is ≤ 40.

8.6.12.2 The minimum RRF of the analytes that exceed the limit is 0.050.

8.6.12.3 The mean of the %D values for all analytes is less than or equal to 25.

8.6.12.4 If an analyte that exceeds the QC limits is found in a sample extract, that extract must be re-analyzed using a calibration verification that meets QC limits for that analyte.

8.6.13 If any of the criteria are not satisfied a second continuing calibration may be analyzed. Repeated failure requires the analysis of a new initial calibration before analysis of samples can begin. If repairs to the system are required then a new initial calibration must be performed.

8.6.14 The analyst should observe trends in the data such as declining response, erratic relative response, loss of classes of compounds, etc. which may signal the need for instrument maintenance. See Section 9.4.

8.7 Quantitation Limit Standard analysis

8.7.1 Analyze a quantitation limit standard (QLS) in each 12-hour period (see Section 8.4.2.1 for definition of 12-hour time period) when analyses of field or QC samples are performed. The QLS is used to verify analytical system response at the quantitation limit.

8.7.2 Analyze the 10 μg/mL calibration standard according to Section 9 of this SOP

8.7.3 Calculate the percent of true value for each target compound using Equation 5.

Equation 5

$$\% \text{ True Value} = (Cd / Tv) \times 100$$

Where:
Cd = Concentration determined by analysis
Tv = True value

8.7.4 The accuracy for each analyte, expressed as a percentage of true value must be between 50 - 150%. If the QLS sample fails, the cause must be determined and corrected before analysis of samples can begin.

8.7.5 If the 10 μg/mL QLS standard fails for target analytes with on column quantitation limits of 25 ng listed in Appendix B, then analyze a 25 μg/mL standard. Calculate the % True Value using Equation 6. The %True Value must be between 50 - 150%. If the QLS sample fails, the cause must be determined and corrected before analysis of samples can begin.

8.7.6 If the QLS standard fails, a fresh QLS solution of that standard may be analyzed.

8.8 Laboratory Reagent Blank (LRB) analysis.

8.8.1 An LRB is extracted with each extraction batch in order to demonstrate that the entire analytical system - from extraction through GC/MS analysis - is free of contamination.

8.8.2 Analyze the LRB according to Section 9 of this SOP.

8.8.3 Evaluate the LRB as soon as possible after it has been analyzed to determine if the following criteria have been met:

The LRB is acceptable if it contains less than the quantitation limit (QL) of any single target compound. Exceptions are the target phthalate esters, each of which may be present at up to five times the QL.

8.8.4 The LRB internal standards must meet the criteria listed in Section 8.11.2

8.8.5 The LRB surrogate recoveries must meet the criteria listed in Section 8.12.1

8.8.6 Corrective action - If the LRB is not acceptable, the source of the contamination must be found and eliminated and the problem documented before analysis can proceed. If re-analysis does not solve the problem, the batch may have to be re-extracted. Corrective action is decided by the EPA TOPO on a case by case basis.

8.8.7 If surrogate or internal standard recoveries do not meet acceptance criteria, re-analyze the extract. If the surrogate recoveries still do not meet acceptance criteria, document failure in the report narrative.

8.9 Laboratory fortified matrix and duplicate analysis.

8.9.1 A laboratory fortified matrix and a duplicate sample are extracted and analyzed for each batch of twenty or fewer samples extracted as a group.

8.9.2 LFM and LFMD extracts should be analyzed as soon as possible following the analysis of the sample designated as the laboratory fortified matrix sample.

8.9.3 Analyze the LFM and LFMD according to Section 9 of this SOP.

8.9.4 The recovery and RPD criteria for the LFM and LFMD analyses are as follows:

	%Recovery		**RPD**	
Compound	**Water**	**Soil**	**Water**	**Soil**
Phenol	12 - 110	26 - 100	21	35
2-Chlorophenol	27 - 123	25 - 102	16	50
1,4-Dichlorobenzene	36 - 100	28 - 104	22	27

	% Recovery		RPD	
Compound	**Water**	**Soil**	**Water**	**Soil**
n-Nitroso-di-n-propylamine	41 - 116	41 - 126	38	38
1,2,4-Trichlorobenzene	39 - 100	38 - 107	28	23
4-Chloro-3-methylphenol	23 - 100	26 - 103	42	33
Acenaphthene	46 -118	31 - 137	31	19
2,4-Dinitrotoluene	24 - 100	28 - 100	38	50
4-Nitrophenol	10 - 100	11 - 114	50	47
Pentachlorophenol	9 - 103	17 - 109	50	107
Pyrene	26 - 127	35 - 142	31	36

8.9.5 Calculate the recovery of each compound using Equation 6.

Equation 6

$$\% \text{ Rec} = ((SSR - SR)/SA) \times 100$$

where,

SSR = Spiked sample result (volume/weight corrected)
SR = Sample result (volume/weight corrected)
SA = Spike added

8.9.6 Calculate the relative percent differences (RPD) of the recoveries of each compound in the matrix spike and matrix spike duplicate using Equation 7.

Equation 7

$$RPD = \frac{(LFMC - LFMDC)}{(LFMC + LFMDC)/2} \times 100$$

where:

LFMC = Measured concentration of analyte in LFM
LFMDC = Measured concentration of analyte in LFMD

8.9.7 The limits for LFM/LFMD recovery are advisory limits only. If the limits are not met, then no further action is required, as long as the LFB is within limits, since the purpose of these analyses is to determine matrix effects on compound recovery. However, frequent failure to meet the recovery or RPD criteria should alert the analyst that a problem may exist and must be investigated. The analyst should analyze the matrix spike solution and check the recoveries of the spike compounds. A new solution should be prepared if the recoveries are not within 30% of the expected values.

8.10 Laboratory Fortified Blank (LFB) An LFB is analyzed to demonstrate that the analytical system is in control. The LFB is extracted and analyzed once per batch or every 20 samples, whichever is more frequent. The LFB is an LRB spiked with laboratory fortified matrix solution.

8.10.1 All analytes and surrogates must be recovered within the QC limits listed in section 8.9.4. If not, the source of the problem must be determined prior to reporting any sample data. It usually indicates either a discrepancy between the spiking solution and the calibration standard, or a problem in the extraction laboratory.

8.10.2 The table below lists the action to be taken based on the LFB and LFM/LFMD results.

QC ACCEPTANCE MATRIX

+ = PASS — = FAIL

CASE	1	2	3	4	5	6	7	8
LFB - % REC	+	+	+	+	–	–	–	–
LFM/LFMD -% REC	+	–	+	–	+	–	+	–
LFM/LFMD - RPD	+	+	–	–	+	+	–	–

Case 1: Extraction batch is acceptable.

Case 2: Extraction batch is acceptable; matrix effect confirmed.

Cases 3 & 4: Extraction batch is unsatisfactory. Investigate LFM/LFMD problem and document findings in report narrative.

Case 5: Extraction batch is rejected. The batch may have to be re-extracted unless LFB problem is determined and documented.

Cases 6, 7 & 8: Extraction batch is rejected. Re-extract batch.

8.11 Internal standard recovery.

8.11.1 Check the internal standard recovery, determined by total area, for all standards, blanks, samples, and spikes immediately after analysis in order to determine if all applicable criteria have been met.

8.11.2 If the total area of any internal standard in any blank, sample, or spike analysis changes by more than a factor of two (-50% to +100%) of the corresponding internal standard from the preceding 12-hour calibration standard, the system must be checked for malfunctions and the necessary corrections made (see Section 9.4). After the corrections are made, the analyses performed while the system was not in control must be repeated. Keep in mind that many "corrections" to the system will require a new initial calibration be performed prior to re-analysis of the samples.

8.11.3 If after re-analysis, the total areas for all internal standards are within the criteria, then the problem is considered to have been within the laboratory's control. Report the results from the re-analysis and submit the data for both analyses. Distinguish between the analysis and re-analysis by adding an "RI" suffix to the client sample ID on the re-analysis. The problem must be documented in the report narrative (see Section 10.2.1.1).

8.11.4 If re-analysis of the sample does not solve the problem, report the results from the first analysis and submit the data from both analyses. Distinguish between the analysis and re-analysis by adding an "RI" suffix to the client sample ID on the re-analysis. The problem must be documented in the report narrative (see Section 10.2.1.1).

8.11.5 Check internal standard retention times in all standards immediately after data acquisition. If the retention time for any internal standard changes by more than 0.2 minute from the latest daily calibration standard, the system must be inspected for malfunctions, and the necessary corrections made. Compare the IS retention times in field and QC samples analyzed within the 12-hour analytical period of the initial calibration to the IS retention times in the 25 μg/L standard.

8.12 Surrogate recovery.

8.12.1 Calculate the surrogate recovery in all blanks, samples, and spike immediately after analysis using Equation 8 and compare to the following criteria.

Compound	Water %R	Soil %R	
2-Fluorophenol	21 - 110	25 - 121	
Phenol-d5	10 - 110	24 - 113	
Nitrobenzene-d5	35 - 114	23 - 120	
2-Fluorobiphenyl	43 - 116	30 - 115	
2,4,6-Tribromophenol	10 - 123	19 - 122	
Terphenyl-d14	33 - 141	18 - 137	
2-Chlorophenol-d4	33 - 110	20 - 130	(advisory)

Compound	Water %R	Soil %R	
1,2-Dichlorobenzene-d4	16 - 110	20 - 130	(advisory)

Equation 8

$$\%R = (\text{Amount Found}/\text{Amount Spiked})\times 100$$

8.12.2 Take the following steps if the recovery of one or more of the surrogates is not within the limits.

8.12.2.1 Check to ensure that there are no calculation errors, and check the system performance.

8.12.2.2 Re-analyze the extract if a system performance problem or calculation error is not evident. The extract may be diluted for re-analysis if examination of the chromatogram so indicates (e.g., very large amounts of hydrocarbon).

8.12.2.3 If re-analysis of the extract does not solve the problem, the sample may have to be re-extracted. Corrective action is decided by the EPA TOPO on a case by case basis.

8.12.2.4 Do not re-extract undiluted samples with surrogate recoveries outside the limits if the diluted analysis with acceptable surrogate recoveries is being submitted. Report the event in the run log and report narrative.

8.12.2.5 Do not re-analyze the LFM or LFMD samples, even if the surrogates recoveries are outside the limits.

8.12.2.6 If the sample associated with the LFM/LFMD analyses does not meet the surrogate recovery criteria, it should be re analyzed only if the matrix spike and duplicate surrogate recoveries are within the limits. If the sample and spikes show the same pattern (i.e., outside the limits), then the sample does not need re-analysis. The similarity in surrogate recoveries in the sample and spike analyses must be discussed in the report narrative (See Section 10.2.1.1).

8.12.3 If the surrogate recoveries of the re-analysis of the extract are within limits, then:

8.12.3.1 If the re-analysis was undiluted, the problem was within the laboratory's control. Report the results from the re-analysis and submit the data from both analyses. Distinguish between the analysis and re-analysis by adding an "RE" suffix to the client sample ID on the re-analysis. The problem must be documented in the report narrative (see Section 10.2.1.1).

8.12.3.2 If the re-analysis was diluted, the problem was a matrix effect. Report the results from the re-analysis and submit the data from both analyses and discuss the result in the report narrative. Distinguish between the undiluted and diluted analysis by adding a "DL" suffix to the client sample ID on the diluted analysis. The problem must be documented in the report narrative (see Section 10.2.1.1).

8.12.4 If the sample was re-extracted and the surrogate recoveries of the re-extraction are within limits, then the problem was within the laboratory's control. Report the results from the re-extraction. Distinguish between the original analysis and the re-analysis by adding the "RE" suffix to the client sample ID in the re-analysis. The problem must be documented in the report narrative (see Section 10.2.1.1).

8.12.5 If the re-extraction does not solve the problem, report the results from the first analysis and submit the data from both analyses. Distinguish between the original analysis and the re-analysis by adding the "RX" suffix to the client sample ID in the re-analysis. The problem must be documented in the report narrative (see Section 10.2.1.1).

8.13 Sample dilution.

8.13.1 Dilute and inject a new aliquot of the extract if the on-column concentration of any target compound in any sample exceeds the initial calibration range. Add more internal standard solution to the diluted extract to maintain the initial internal standard concentration. Use the following criteria in performing dilutions:

8.13.1.1 Use the results of the original analysis to determine the approximate dilution factor required to get the largest analyte peak within the initial calibration range.

8.13.1.2 Keep the response of the largest analyte peak for a target compound in the upper half of the initial calibration range of the instrument by choosing an appropriate dilution factor.

8.13.1.3 Do not dilute LFM/LFMD samples to get either the spiked or non-spiked target compounds within the initial calibration range. If the sample from which the spike aliquots were taken contains high levels of the spiked analytes, calculate the concentration and recovery of the analytes from the undiluted analysis, and note the problem in the report narrative.

8.13.1.4 In the case of extremely contaminated samples several dilutions may be required.

8.13.1.5 Distinguish between the undiluted and diluted analysis by adding a "DL" suffix to the client sample ID on the diluted analysis.

8.13.2 Demonstrate that there is no carryover to subsequent analyses after a sample is analyzed that contains one or more target compounds at a level exceeding the initial calibration range of the system. This can be done by analyzing an instrument blank.

8.13.2.1 Monitor the sample analyzed immediately after the contaminated sample for all compounds that were in the contaminated sample that exceeded the limits above. The maximum contamination criteria are as follows:

8.13.2.2 The sample should not contain a concentration above the QL for the target compounds that exceeded the limits in the contaminated sample, unless other analytes present in the sample indicate that the presence of these compounds is likely. The most common scenario for this is when PNAs are found in both samples, and the pattern in the second sample does not follow the pattern in the first.

8.13.3 The most common cause of a carryover is hydrocarbon in the oil/asphalt range. This may require cleaning the injection port and analyzing an instrument blank.

8.14 Review of Target Analytes

Review each reported value for both qualitative and quantitative validity. This process, in particular the qualitative review of mass spectra, relies upon the technical judgement of the analyst.

8.14.1 Qualitative Review

Both the relative retention time and the mass spectra must match those of the standard's in order for a target compound to be identified as present in a sample.

8.14.1.1 Target analytes must elute within 0.06 relative retention time units of the analyte in the continuing calibration standard. The relative retention time is the retention time of the target divided by the retention time of the associated internal standard. If the relative retention time for the target analyte in the CCAL is 0.82 then the peak in the sample must have a relative retention time of 0.76 to 0.88.

8.14.1.2 The intensities of the characteristic ions of a compound must maximize in the same scan or within one scan of each other.

8.14.1.3 The mass spectra used for qualitative identification must be obtained using the GCMS system used to analyze the samples.

8.14.1.3.1 All ions present in the standard mass spectra at a relative intensity of 10 percent of the most abundant ion must be present in the sample spectra.

8.14.1.3.2 The relative intensities of the ions must agree within ±30 % (absolute) between the standard and sample spectra.

8.14.1.3.3 Ions present in the sample at greater than 10 percent abundance but not present in the standard spectra must be reviewed and accounted for by the analyst making the comparison.

8.14.1.3.4 If a compound cannot be verified by these criteria but, in the technical judgement of the analyst, is present the supporting evidence must be indicated on the raw data and the analyte reported.

8.14.2 Quantitative Review

Review reported values to determine that the correct calculations were used to generate the results, that the RRFs from the associated continuing calibration standard were used, and that all other numbers are accurate.

8.14.2.1 Review of data system integrations

The analyst must review the data system integration to verify that the internal standards, surrogates and target compounds are integrated properly. In the

event that the analyst observes an incorrect integration, the analyst must manually correct the integration and document the correction following Section 8.5.11 of this SOP and EPA Region 9 SOP #835, *Chromatographic Integration Procedures.*

8.14.2.2 Water calculations

Calculate results for target analytes using Equation 9:

Equation 9:

$$\text{Conc. } \mu g / L = \frac{A_x \times C_{is} \times V_t \times V_i \times DF}{A_{is} \times \overline{RRF} \times V_o}$$

where:

A_x = area of the quantitation ion of the compound
C_{IS} = concentration of internal standard in μg/mL (normally 20)
DF = dilution factor
A_iS = area of the quantitation ion of the associated internal standard
RRF = analyte's mean relative response factor from the initial calibration
V_o = volume of water extracted in mL
V_i = volume of extract injected in μL
V_t = volume of concentrated extract in μL

8.14.2.3 Soil calculations

Calculate results for target analytes using Equation 10:

Equation 10:

$$\text{Conc. ug / Kg (dry weight basis)} = \frac{A_x \times C_{is} \times V_t \times V_i \times DF \times GPC}{A_{is} \times \overline{RRF} \times W \times D}$$

where:

A_x = area of the quantitation ion of the compound
C_{IS} = concentration of Internal Standard in μg/mL (normally 20)
D = dry weight factor (Percent solids/100)
W = weight of sample in grams
A_{IS} = area of the characteristic ion of the associated internal standard
RRF = analyte's mean relative response factor from the initial calibration
V_t = volume of concentrated extract in μL
DF = dilution factor

GPC = GPC factor, normally 1.0 if not used, 2.0 if used
V_i = volume of extract injected in μL

8.15 Review the Tentatively Identified Compound search results for the following:

8.15.1 Verify that all unknown peaks in the chromatogram greater than10 percent of the area of the nearest internal standard are accounted for in the summary.

8.15.2 Relative intensities of the major ions in the NIST reference spectrum (ions greater than 10 percent of the most abundant ion) should be present in the sample.

8.15.3 The relative intensities of the major ions should agree within 20 percent.

8.15.4 Molecular ions present in the reference spectrum should be present in the sample spectrum.

8.15.5 Ions present in the sample spectrum but not in the reference spectrum shall be reviewed for possible background contamination or the presence of co-eluting compounds.

8.15.6 Ions present in the reference spectrum but not within the scan range (35 to 500 amu) of the method should not be considered when making a tentative identification.

8.15.7 If, in the technical judgement of the analyst, no valid tentative identification of the compound can be made, the compound should be reported as "Unknown". The analyst shall attempt classification of the unknown compound (i.e., unknown hydrocarbon, unknown aromatic, unknown chlorinated compound, etc.). The probable molecular weight should be included, if distinguishable.

8.16 If any of the data reports have been edited, or if manual integration or quantitation has been performed, the analyst must identify the changes. A supervisor, QA/QC coordinator, or team leader must review both the original and the changed data and indicate acceptance by initialing and dating the report. See SOP#835, *Chromatographic Integration Procedures*.

9 ANALYTICAL PROCEDURES

9.1 Analytical system preparation.

9.1.1 Calibrate the mass axis and optimize the peak width of the mass spectrometer using FC43 at the beginning of each 12-hour period during which standards or QC or field samples are to be analyzed.

9.1.2 Check the GC/MS system for leaks prior to the analysis of the DFTPP tuning compound. The system must also be checked for leaks after any disconnection and re-connection in the entire system, from the carrier gas source to the MS.

9.1.2.1 Acquire a scan of m/z's 18, 28, and 69. Observe the ratio of the water peak (m/z 18) to the nitrogen peak (m/z 28). If a leak is present in the mass spectrometer, the nitrogen peak will be greater than the water peak. Corrective action must be taken if a leak is detected. The ratios of these ions to the m/z 69 ion should be no more than 10%. Ratios between 10 and 20% indicate a problem that should be repaired as soon as practical, and ratios greater than 20% indicate problems that should be repaired immediately.

9.1.3 The GC/MS system must meet the mass spectral ion abundance criteria for DFTPP and the maximum breakdown criteria for DDT prescribed in Section 8.4 prior to the analysis of any calibration standards, blanks, or samples

9.1.3.1 Analyze the DFTPP+ solution using the system conditions in Appendix E. Obtain ion abundance ratios from a background subtracted average of three scans around the apex of the DFTPP peak or from any one or two of these scans with or without background subtraction. The ion abundance ratios must meet the criteria listed in Section 8.4.4. If not, appropriate corrective action must be taken before calibrations or extracts are analyzed. See Section 9.4.

9.1.3.2 Evaluate the percentage of DDT breakdown as described in Section 8.4.4.2. If it is greater than 20%, take corrective action.

9.2 Calibration - The target compounds for this method are listed in Appendix B.

9.2.1 Five-point initial calibration

Perform a five-point initial calibration in order to demonstrate that the GC/MS system provides a linear response over the desired concentration range.

9.2.1.1 Create a method (if not present already) to operate the GC and collect data as described in Appendix E. Create a sequence to use this method to analyze the standard solutions - 80, 60, 40, 25 and 10 μg/mL.

9.2.1.2 Analyze the 10 or 25 μg/mL standard. Verify that all of the peaks have been properly identified. Update the retention times in the method. Save the method and re-quantitate the chromatogram. Make sure that all of the standards are quantitated using the updated retention times.

9.2.1.3 Update the initial calibration response factors in the method by associating the correct data file with each calibration level. Save the method.

9.2.1.4 Generate the initial calibration summary report. Samples shall not be analyzed if the initial calibration does not meet the criteria specified in Appendix B of this SOP.

9.2.1.5 Analyze a QCS sample immediately after each initial calibration. The RRF for each analyte in the QCS must be within 30% of the mean RRF in the initial calibration. If the QCS sample fails, the cause must be determined and corrected before analysis of samples can proceed.

9.2.1.6 If the initial calibration and the QCS meet all the criteria specified in Section 8.5 of this SOP, the remainder of the 12-hour analytical period may be used for the analysis of blanks, spikes and samples, using the average RRF from the initial calibration to quantitate these data files.

9.2.2 Calibration Verification

Analyze a calibration verification standard once in every 12-hour analytical time period, after DFTPP tuning and prior to continuing with extract analysis. The calibration verification is performed in order to determine if the GC/MS system is operating within the acceptable range as demonstrated by the percent difference and the minimum response factor criteria meeting the appropriate QA/QC criteria. The continuing calibration is analyzed at a level of 25 μg/mL.

9.2.2.1 Analyze the 25 μg/mL standard. Verify that all compounds have been properly identified. Update the retention times in the method. Save the method. Re-quantitate the chromatogram, again verify that all compounds have been properly identified. Select Report Continuing Calibration to Printer. Examine the RRFs and %Ds for method compliance following sections 8.6.4 through 8.6.12 of this SOP. If the continuing calibration meets QC criteria, analysis of extracts can begin.

9.2.2.2 If any of the criteria are not satisfied a second continuing calibration may be analyzed. Repeated failure requires the analysis of a new initial calibration before analysis of samples can begin. If repairs to the system are required then a new initial calibration must be performed.

9.2.2.3 Take corrective action if the continuing calibration fails. This may consist of re-analyzing the standard, clipping the column and replacing the injection port seal, or creating a new five point calibration.

9.2.3 Sample analysis.

Samples can be analyzed only after the DFTPP tune and initial calibration or continuing a calibration meet all of the appropriate criteria specified in Section 8 of this SOP.

9.2.3.1 Setup the GC/MS system with the appropriate GC and mass spectrometer conditions. See Appendix E.

9.2.3.2 Set up a data acquisition sequence. The sample description shall include the client sample ID and the laboratory sample ID. Additional header information shall include the dilution factor, instrument ID, and the analyst's initials.

9.2.3.3 Add 10 μL of the IS solution to each 1 mL of field and QC sample extract.

9.2.3.4 Include all QC sample extracts. It is highly recommended that the LRB, LFB and LFM/LFMD extracts be analyzed as early as possible in the analysis of a batch.

9.2.3.5 After completion of analysis, quantitate the data using the appropriate initial calibration mean RRF's and print out quantitation reports and chromatograms for each field and QC sample.

9.2.3.6 Review the results as discussed in Section 8.14 for identification of target analytes. Manually cross out all reported hits which do not meet the qualitative criteria and document the reason on the quant report. Review all target compounds that are detected to verify they are integrated properly. Review the chromatogram for possible false negatives.

9.2.3.7 Document any required manual integrations as described in Section 8.5.11 and Region 9 SOP #835. Print out the updated quantitation report.

9.2.3.8 Check the sample's internal standard area counts and surrogate recoveries with the criteria in Section 8.11 and 8.12.

9.2.3.9 Dilute and re-analyze the sample extracts if any of the target analytes exceed the calibration range of the instrument. Dilute the extract so that the most prominent target compound will fall within the upper half of the initial calibration range of the instrument.

9.3 Tentatively Identified Compounds (TICs)

9.3.1 Load the data file of the most concentrated valid analysis of the sample.

9.3.2 Examine the spectra for each peak that is not a target, surrogate or internal standard. See how well it matches the tentative identifications given by the data system. Report any unique, likely match, if there is one. If none, so state. Try to give as much information as possible, e.g., "unknown polynuclear aromatic hydrocarbon," "unknown, molecular weight 205 daltons".

9.3.3 The concentration of TIC's should be estimated. Use the TIC area in Equations 9 and 10 and assume the RRF is 1. Use the nearest internal standard free of interferences.

9.3.4 If the base peak saturates the detector, document this in the data. Do not dilute a sample extract to get the base peak of a TIC within the detector range. If a sample extract containing a saturated TIC ion was diluted to get a target compound within calibration range, use the TIC base peak area from the diluted extract to estimate the concentration of the TIC.

9.4 The following are suggested corrective actions which may improve method performance. Document all routine maintenance or corrective actions taken in the maintenance logbook.

9.4.1 Adjust the mass gain and peak width or re-calibrate the mass axis or retune the mass spectrometer.

9.4.2 Replace the injection liner and/or the inlet seal.

9.4.3 Break off a portion of the column (a few inches to a foot or more) from the injector end.

9.4.4 Prepare fresh standard solutions

9.4.5 Clean the ion source

10 DOCUMENTATION

10.1 Data from the Region 9 Laboratory is presented to the client in one of two general reporting formats: a complete data package or a summary report data package. For the former the laboratory provides summary forms of calibration, quality control, and sample results along with the raw data for standards and field and QC samples, logbook pages, a report narrative, and the analytical report spreadsheet to the client. If a summary package is all that is required the laboratory provides a report narrative, analytical results spreadsheet, and sample specific raw data for delivery to the client and collects all other data included in a complete data package and files it at the laboratory. Section 10.2 details the requirements of a complete data package and Section 10.3 lists the summary report requirements.

10.2 Assembly of a complete data package.

A data package for each SDG in each case requiring the delivery of a complete data package shall be assembled by the analyst, or other chemist, according to the following instructions, and in the following order. Each section of the data package shall have a cover sheet titled with the appropriate section name. The data package shall be sequentially numbered after assembly using a hand-operated numerator.

10.2.1 Report Narrative section.

10.2.1.1 The Report Narrative section contains a text narrative describing, but not limited to, the following.

10.2.1.1.1 Site name.

10.2.1.1.2 Case number.

10.2.1.1.3 SDG number.

10.2.1.1.4 Client sample ID - Laboratory sample ID cross reference

10.2.1.1.5 Date(s) the samples were received.

10.2.1.1.6 Protocol used to analyze the samples

10.2.1.1.7 LRB results

10.2.1.1.8 Surrogate recoveries

10.2.1.1.9 Internal standard recoveries.

10.2.1.1.10 LFM/LFMD results.

10.2.1.1.11 LFB results.

10.2.1.1.12 Analytical comments section to include:

10.2.1.1.12.1 Problems with analysis

10.2.1.1.12.2 Examples of calculations

10.2.2 Summary of Analytical Results spreadsheet

10.2.2.1 Include a spreadsheet containing a summary of the results for all target analytes for all samples and LRB's in the data package.

10.2.2.2 The header information for each sample contains the station location, Sample ID, and date sampled.

10.2.2.3 The results section contains the results for each target analyte as follows:

If an analyte is not detected then the quantitation limit with a "U" qualifier will be reported

If an analyte is detected then the value reported on the quant report and the associated qualifier (Section 10.2.5.1) will be reported.

If an analyte requires a dilution then value from the sample dilution will be reported.

10.2.3 Tracking Forms section.

The Tracking Form section contains the following forms.

10.2.3.1 A technical direction form

10.2.3.2 A copy of the chain of custody records received with each sample shipment.

10.2.3.3 A copy of the shipper's air bill, or bill of lading.

10.2.4 QA/QC Summary section.

The QA/QC section contains all of the QA/QC summary forms for the specific sample delivery group. All of the forms are checked by the analyst to ensure that all of the filenames are correct, and that all of the appropriate standards, blanks, samples and spikes have been included.

10.2.4.1 Data analysis of sample SDG matrix summary report

10.2.4.2 Surrogate recovery and internal standard area count data. In a chronological order by instrument.

10.2.4.3 LFB recovery data.

10.2.4.4 LFM and LFMD recovery data.

10.2.5 Initial Calibration section:

10.2.5.1 Copy of the peer reviewed instrument run log page(s).

10.2.5.2 DFTPP tuning report, which includes the pass/fail table, bar spectrum and tabulated mass listing.

10.2.5.3 Initial calibration summary form containing the response factors for each file, the average response factor for each compound, and the percent RSD for each compound in the initial calibration.

10.2.5.4 Quantitation reports and RICs.

10.2.5.5 Documentation of any required manual integrations as described in Section 8.5.11 and Region 9 SOP #835.

10.2.6 Daily Sample Package section.

The daily sample package section contains the following forms and raw data for each sample including QC samples of LFM/LFMD, LFB, and LRB in the data package, assembled in data file alphanumeric order. Each daily package is arranged in chronological order.

10.2.6.1 Quantitation report, data report form listing all detected target compounds, surrogates and internal standards and the levels detected in the sample. All analyses must be included, even those not used. The analyst shall check to be sure that the appropriate qualifier is added to the form as indicated below.

B This analyte was detected in the associated method blank as well as in the sample.

E The amount detected exceeds the calibration range of the instrument.

J The analyte was positively identified . The amount is less than QL but greater than or equal to ½ of QL and/or the associated numerical value is approximate. It is an estimated value.

10.2.6.2 The reconstructed ion chromatogram (RIC) of the data file.

10.2.6.3 The raw spectra and enhanced spectra of the target compounds, internal standards and surrogates detected in the sample, as well as the corresponding reference spectra in order of elution.

10.2.6.4 Documentation of any required manual integrations as described in Section 8.5.11 and Region 9 SOP #835.

10.2.6.5 Non-target compound report form detailing the compound names, retention times, the estimated concentrations, and the CAS number of up to twenty tentatively identified compounds. The exceptions are QC samples of LFB, LFM/LFMD.

10.2.6.6 Enhanced spectra of non-target compounds detected in the sample. Library search listing the three best fits of a forward library search of the non-target compounds.

10.2.6.7 Area summary showing results of integrating the RIC.

10.2.7 Logbooks and Miscellaneous Data.

All logbooks must be peer reviewed and complete in compliance with USEPA Region 9 Laboratory SOP #840, Notebook Documentation and Control.

10.2.7.1 Copies of all applicable standards preparation logbook pages.

10.2.7.2 Copies of extraction log pages.

10.2.7.3 Copies of Percent Solids logbook pages, if applicable.

10.2.7.4 Copies of GPC run log logbook pages, if applicable

10.2.7.5 Copies of applicable Semivolatile Organics Run Log pages

10.3 Summary Report and Raw Data

When the clients' requirements stipulate a summary data package, the laboratory prepares the report narrative, analytical results spreadsheet, and sample specific raw data and organizes other data associated with the package for filing in the event that future data review or validation is required.

10.3.1 Prepare the report narrative according to the requirements listed in Section 10.2.1.

10.3.2 Prepare the analytical results spreadsheet according to the specifications provided in Section 10.2.2.

10.3.3 Organize the raw data associated with the analysis of all the samples in the package for filing and present it for review along with the report narrative and the spreadsheet. No summary forms need be generated with the raw data but any forms which would normally be generated as part of the analysis must be included in the package. For example, the calibration summary reports generated by the data system and used by the analyst to assess the acceptability of the calibration should be filed with the raw data.

10.3.3.1 Include sample tracking information as detailed in Section 10.2.3 as the analyst has a copy of the information readily available.

10.3.3.2 Sample raw data organized by laboratory sample ID must include: the quantitation report; the RIC; the raw and enhanced spectra of the internal standards, surrogates and any target compounds detected in the sample, as well as the enhanced spectra of the corresponding compounds in the calibration file; and enhanced spectra of non-target compounds detected in the sample along with the library search listing the three best matches for the non-target compounds. (Sections 10.2.5.3 through 10.2.5.6)

10.3.3.3 Calibration data must include any available summary information and the quantitation reports and RICs for all initial calibrations and continuing calibrations associated with the SDG. This information must be organized by instrument and date. Additionally, any manual integration must be demonstrated by including the associated peak integration as described in Section 8.5.11.

10.3.3.4 Include raw data for QC samples. Tuning data and the associated summary used by the analyst to determine acceptability, blanks (quant report, RIC and spectra and TICs), LFM/LFMD data (quant report and RICs) should all be included in this order.

10.3.3.5 Runlogs and standard preparation logbooks need not be included in the raw data as these are already filed in an accessible manner in the laboratory.

10.4 Technical review.
Assign the data package an ESAT document control number after assembly. Each data package is reviewed by the GC Group Leader or a senior level chemist, other than the chemist who performed the analyses. All reviews are documented using the review form. After the peer review is performed, a cover letter is prepared and signed by the Group Leader. Final review of the data package is done by ESAT QA/QC Coordinator or ESAT Team Leader and the package is then paginated and submitted to EPA Region 9.

10.5 Injection logbook.
Maintain an injection logbook listing each field and QC sample injected for each instrument in accordance with ESAT SOP #840, *Notebook Documentation and Control.*

10.6 Standards' logbook

Maintain a logbook documenting the preparation of all standard solutions. Record the standard ID, preparation date, expiration date, solvent and solvent lot number used. Record the identification, supplier, lot number, concentration purity, and expiration date of the stock standard solution used. Record the aliquot weight or volume of the stock standard solution, final volume of the standard solution and the concentration of the analyte(s) in the standard. Document the calculations used in preparing the standard.

10.7 Maintenance logbook

Maintain a logbook for each instrument. Record the date, the problem and resolution, and documentation of return to control. Document all preventive or routine maintenance procedures, as well as repairs or corrective or remedial actions in accordance with ESAT SOP #840, *Notebook Documentation and Control.*

11 REFERENCES

1 EPA Method 8270C, *Semivolatile Organic Compounds by Gas Chromatography/Mass Spectrometry (GC/MS)*, Revision 3, December 1996.

2 EPA Method 525.2, *Determination of Organic Compounds in Drinking Water by Liquid-Solid Extraction and Capillary Column Gas Chromatography/Mass Spectrometry*, Revision 2.0, 1995

3 EPA Region 9 SOP #125. *Disposal Procedures for Unused Aqueous Environmental Samples*

4 HP 5972A MSD Hardware Manual

5 HP EnviroQuant Chemstation User's Guide

6 HP Environmental Analysis User's Guide

7 EPA Region 9 SOP #835, *Chromatographic Integration Procedures*

8 EPA Region 9 SOP #840, *Notebook Documentation and Control*

9 EPA Method 8000B, *Determinative Chromatographic Separations*, Revision 2, December 1996.

10 EPA Region 9 SOP #805, *Refrigerator Temperature Monitoring*

11 40 CFR, Part 136, Appendix B.

12 HP 5890 Gas Chromatograph Users Manual

13 HP 6890 Gas Chromatograph Users Manual

APPENDIX A

DEVIATIONS FROM SW-846 METHOD 8270C

1. There is no requirement in the reference method for the analysis of a quality control sample (QCS), or a second source standard.

2. This SOP uses a GC column with a 0.25 μm film instead of a 1 μm film as specified in the reference method.

3 The surrogate solution used in this SOP contains 1,2-dichlorobenzene-d_4 and 2-chlorophenol-d_4, neither of which are specified by method 8270.

4 The reference method recommends a concentration of 40 ng/μL in the sample extract for each internal standard; this SOP specifies 20 ng/μL instead.

5 SW-846 method 3500B referenced by method 8270C specifies a concentration of 200 mg/L for the acid matrix spiking solution; this SOP specifies 150 mg/L.

6 The reference method does not have criteria for the chromatographic separations of anthracene/phenanthrene or benzo(a)anthracene/chrysene.

7. This SOP allows for the re-analysis of certain calibration, QC, and sample solutions if the first analysis fails QC limits. This practice is not addressed in the reference method.

8. This SOP allows for a four-point calibration for certain analytes with on column quantitation limits of 25 ng (see Appendix D). The reference method requires a five-point calibration for all analytes.

9. There is no requirement in the reference method that a quantitation ion not saturate the detector.

10. There is no requirement in the reference method for the analysis of a quantitation limit standard (QLS).

11. This SOP allows the phthalate esters to be present at levels exceeding the QL in the laboratory reagent blank; the reference method does not.

12. The LFB/LFM/LFMD acceptance criteria are predetermined and fixed; they are not updated using laboratory data as in the reference method.

13. The retention times of internal standards must be within 0.2 minute from the latest daily calibration, instead of 0.5 minutes as in the reference method.

14. The acceptance criteria for surrogates are predetermined and fixed; they are not updated using laboratory data as in the reference method.

15. There is no requirement in the reference method that the response of the largest analyte peak in a dilution be kept in the upper half of the initial calibration range.

16. There is no requirement in the reference method that all ions present in the standard mass spectra at a relative intensity of 10 percent of the most abundant ion must be present in the sample spectra.

17. There is no requirement in the reference method that ions present in the sample at greater than 10 percent abundance but not present in the standard spectra must be reviewed and accounted for by the analyst making the comparison.

18. There is no requirement in the reference method that the GC/MS system is to be checked for leaks prior to the analysis of the tuning compound by monitoring m/z's 18, 28, and 69.

19. Diphenylamine is not used as a CCC in this SOP as in the reference method since it is not a target analyte in this SOP.

20. The maximum RSD of target analytes in the initial calibration in this SOP is 20%, not 15% as in the reference method.

21. The maximum RSD for any CCC in this SOP is 20%, not 30% as in the reference method.

22. The maximum %D for any CCC in this SOP is 25, not 20 as in the reference method.

23. The reference method has no %D criteria for analytes in the calibration verification other than the calibration check compounds (CCC's).

APPENDIX B
Calibration Criteria

SEMIVOLATILE COMPOUND	MINIMUM RRF	MAXIMUM %RSD	MAXIMUM %DIFF
Phenol	0.800	20	±25
bis(2-Chloroethyl)ether	0.700	20	±25
2-Chlorophenol	0.800	20	±25
1,3-Dichlorobenzene	0.600	20	±25
1,4-Dichlorobenzene	0.500	20	±25
benzyl alcohol	0.050	20	±25
1,2-Dichlorobenzene	0.400	20	±25
2-Methylphenol	0.700	20	±25
2,2'-oxybis(1-Chloropropane)	0.010	20	±25
4-Methylphenol	0.600	20	±25
N-Nitroso-di-n-propylamine	0.050	20	±25
Hexachloroethane	0.300	20	±25
Nitrobenzene	0.200	20	±25
Isophorone	0.400	20	±25
2-Nitrophenol	0.100	20	±25
2,4-Dimethylphenol	0.200	20	±25
bis(2-Chloroethoxy)methane	0.300	20	±25
2,4-Dichlorophenol	0.200	20	±25
1,2,4-Trichlorobenzene	0.200	20	±25
Naphthalene	0.700	20	±25
4-Chloroaniline	0.010	20	±25
Hexachlorobutadiene	0.010	20	±25
4-Chloro-3-methylphenol	0.200	20	±25
2-Methylnaphthalene	0.400	20	±25
Hexachlorocyclopentadiene	0.050	20	±25
2,4,6-Trichlorophenol	0.200	20	±25
2,4,5-Trichlorophenol	0.200	20	±25
2-Chloronaphthalene	0.800	20	±25
2-Nitroaniline	0.010	20	±25
Dimethylphthalate	0.010	20	±25
Acenaphthylene	0.900	20	±25
3-Nitroaniline	0.010	20	±25
2,6-Dinitrotoluene	0.200	20	±25
Acenaphthene	0.900	20	±25
2,4-Dinitrophenol	0.050	20	±25
4-Nitrophenol	0.050	20	±25
Dibenzofuran	0.800	20	±25
2,4-Dinitrotoluene	0.200	20	±25
Diethylphthalate	0.010	20	±25
4-Chlorophenyl-phenylether	0.400	20	±25
Fluorene	0.900	20	±25
4-Nitroaniline	0.010	20	±25
4,6-Dinitro-2-methylphenol	0.010	20	±25
N-Nitrosodiphenylamine	0.010	20	±25
4-Bromophenyl-phenylether	0.100	20	±25
Hexachlorobenzene	0.100	20	±25

SEMIVOLATILE COMPOUND	MINIMUM RRF	MAXIMUM %RSD	MAXIMUM %DIFF
Pentachlorophenol	0.050	20	±25
Phenanthrene	0.700	20	±25
Anthracene	0.700	20	±25
Carbazole	0.010	20	±25
Di-n-butylphthalate	0.010	20	±25
Fluoranthene	0.600	20	±25
Pyrene	0.600	20	±25
Butylbenzylphthalate	0.010	20	±25
3,3'-Dichlorobenzidine	0.010	20	±25
Benzo(a)anthracene	0.800	20	±25
bis(2-Ethylhexyl)phthalate	0.010	20	±25
Chrysene	0.700	20	±25
Di-n-octylphthalate	0.010	20	±25
Benzo(b)fluoranthene	0.700	20	±25
Benzo(k)fluoranthene	0.700	20	±25
Benzo(a)pyrene	0.700	20	±25
Indeno(1,2,3-cd)pyrene	0.500	20	±25
Dibenzo(a,h)anthracene	0.400	20	±25
Benzo(g,h,i)perylene	0.500	20	±25
SURROGATES			
Nitrobenzene-d5	0.200	20	±25
2-Fluorobiphenyl	0.700	20	±25
Terphenyl-d14	0.500	20	±25
Phenol-d5	0.800	20	±25
2-Fluorophenol	0.600	20	±25
2,4,6-Tribromophenol	0.010	20	±25
2-Chlorophenol-d4	0.800	20	±25
1,2-Dichlorobenzene-d4	0.400	20	±25

APPENDIX C

TARGET COMPOUND LIST FOR SEMIVOLATILE ORGANICS ANALYSIS

The following is the Target Compound List for semivolatile organics, as well as the associated internal standards and surrogates. Included are the internal standard reference for each target compound, as well as the quantitation mass for each analyte.

Compound	Primary Quant Ion	Secondary Ion(s)	Int. Std
Phenol	94	65, 66	1
bis(2-Chloroethyl)ether	93	63, 95	1
2-Chlorophenol	128	64, 130	1
1,3-Dichlorobenzene	146	148, 113	1
1,4-Dichlorobenzene	146	148, 113	1
benzyl alcohol	108	79, 77	1
1,2-Dichlorobenzene	146	148, 113	1
2-Methylphenol	108	107	1
2,2'-oxybis(1-Chloropropane)	45	77, 79	1
4-Methylphenol	108	107	1
N-Nitroso-di-n-propylamine	70	42, 101, 130	1
Hexachloroethane	117	201, 199	1
Nitrobenzene	77	123, 65	2
Isophorone	82	95, 138	2
2-Nitrophenol	139	65, 109	2
2,4-Dimethylphenol	107	121, 122	2
bis(2-Chloroethoxy)methane	93	95, 123	2
2,4-Dichlorophenol	162	164, 98	2
1,2,4-Trichlorobenzene	180	182, 145	2
Naphthalene	128	129, 127	2
4-Chloroaniline	127	129	2
Hexachlorobutadiene	225	223, 227	2
4-Chloro-3-methylphenol	107	144, 142	2
2-Methylnaphthalene	142	141	2
Hexachlorocyclopentadiene	237	235, 272	3
2,4,6-Trichlorophenol	196	198, 200	3
2,4,5-Trichlorophenol	196	198, 200	3
2-Chloronaphthalene	162	164, 127	3
2-Nitroaniline	65	92, 138	3
Dimethyl phthalate	163	194, 164	3
Acenaphthylene	152	151, 153	3
2,6-Dinitrotoluene	165	89, 121	3
3-Nitroaniline	138	108, 92	3
Acenaphthene	153	152, 154	3
2,4-Dinitrophenol	184	63, 154	3
4-Nitrophenol	109	139, 65	3
Dibenzofuran	168	139	3
2,4-Dinitrotoluene	165	63, 182	3
Diethylphthalate	149	177, 150	3
4-Chlorophenyl-phenylether	204	206, 141	3
Fluorene	166	165, 167	3
4-Nitroaniline	138	92, 108	3

Compound	Primary Quant Ion	Secondary Ion(s)	Int. Std
4,6-Dinitro-2-methylphenol	198	182, 77	4
N-Nitrosodiphenylamine	169	168, 167	4
4-Bromophenyl-phenylether	248	250, 141	4
Hexachlorobenzene	284	142, 249	4
Pentachlorophenol	266	264, 268	4
Phenanthrene	178	179, 176	4
Anthracene	178	179, 176	4
Carbazole	167	166, 139	4
Di-n-butylphthalate	149	150, 104	4
Fluoranthene	202	101, 100	4
Pyrene	202	101, 100	5
Butylbenzylphthalate	149	91, 206	5
3,3'-Dichlorobenzidine	252	254, 126	5
Benzo(a)anthracene	228	229, 226	5
bis(2-Ethylhexyl)phthalate	149	167, 279	5
Chrysene	228	226, 229	5
Di-n-Octyl phthalate	149	150, 279	6
Benzo(b)fluoranthene	252	253, 125	6
Benzo(k)fluoranthene	252	253, 125	6
Benzo(a)pyrene	252	253, 125	6
Indeno(1,2,3-cd)pyrene	276	138, 227	6
Dibenzo(a,h)anthracene	278	139, 279	6
Benzo(g,h,i)perylene	276	138, 277	6
SURROGATES			
Phenol-d5	99	42, 71	1
2-Fluorophenol	112	64	1
2,4,6-Tribromophenol	330	332, 141	4
Nitrobenzene-d5	82	128, 54	2
2-Fluorobiphenyl	172	171	3
Terphenyl-d14	244	122, 212	5
2-Chlorophenol-d4	132	68, 134	1
1,2-Dichlorobenzene-d4	152	115, 150	1
INTERNAL STANDARDS			
1,4-Dichlorobenzene-d4	152	115	1
Naphthalene-d8	136	68	2
Acenaphthene-d10	164	162, 160	3
Phenanthrene-d10	188	94, 80	4
Chrysene-d12	240	120, 236	5
Perylene-d12	264	260, 265	6

APPENDIX D

SEMIVOLATILES TARGET COMPOUND LIST AND QUANTITATION LIMITS

Semivolatiles	CAS Number	Water µg/L	Low Soil µg/Kg	Med. Soil µg/Kg	On Column ng
Phenol	108-95-2	10	330	10000	10
bis-(2-Chloroethyl)ether	111-44-4	10	330	10000	10
2-Chlorophenol	95-57-8	10	330	10000	10
1,3-Dichlorobenzene	541-73-1	10	330	10000	10
1,4-Dichlorobenzene	106-46-7	10	330	10000	10
benzyl alcohol	100-51-6	10	330	10000	10
1,2-Dichlorobenzene	95-50-1	10	330	10000	10
2-Methylphenol	95-48-7	10	330	10000	10
2,2'-oxybis (1-Chloropropane)	108-60-1	10	330	10000	10
4-Methylphenol	106-44-5	10	330	10000	10
N-Nitroso-di-n-propylamine	621-64-7	10	330	10000	10
Hexachloroethane	67-72-1	10	330	10000	10
Nitrobenzene	98-95-3	10	330	10000	10
Isophorone	78-59-1	10	330	10000	10
2-Nitrophenol	88-75-5	10	330	10000	10
2,4-Dimethylphenol	105-67-9	10	330	10000	10
bis(2-Chloroethoxy)methane	111-91-1	10	330	10000	10
2,4-Dichlorophenol	120-83-2	10	330	10000	10
1,2,4-Trichlorobenzene	120-82-1	10	330	10000	10
Naphthalene	91-20-3	10	330	10000	10
4-Chloroaniline	106-47-8	10	330	10000	10
Hexachlorobutadiene	87-68-3	10	330	10000	10
4-Chloro-3-methylphenol	59-50-7	10	330	10000	10
2-Methylnaphthalene	91-57-6	10	330	10000	10
Hexachlorocyclopentadiene	77-47-4	10	330	10000	10
2,4,6-Trichlorophenol	88-06-2	10	330	10000	10
2,4,5-Trichlorophenol	95-95-4	25	830	25000	25
2-Chloronaphthalene	91-58-7	10	330	10000	10
2-Nitroaniline	88-74-4	25	830	25000	25
Dimethylphthalate	131-11-3	10	330	10000	10
Acenaphthylene	208-96-8	10	330	10000	10
2,6-Dinitrotoluene	606-20-2	10	330	10000	10
3-Nitroaniline	99-09-2	25	830	25000	25
Acenaphthene	83-32-9	10	330	10000	10
2,4-Dinitrophenol	51-28-5	25	830	25000	25
4-Nitrophenol	100-02-7	25	830	25000	25
Dibenzofuran	132-64-9	10	330	10000	10
2,4-Dinitrotoluene	121-14-2	10	330	10000	10
Diethylphthalate	84-66-2	10	330	10000	10
4-Chlorophenyl-phenylether	7005-72-3	10	330	10000	10
Fluorene	86-73-7	10	330	10000	10
4-Nitroaniline	100-01-6	25	830	25000	25
4,6-Dinitro-2-methylphenol	534-52-1	25	830	25000	25
N-Nitroso-diphenylamine	86-30-6	10	330	10000	10
4-Bromophenyl-phenylether	101-55-3	10	330	10000	10
Hexachlorobenzene	118-74-1	10	330	10000	10
Pentachlorophenol	87-86-5	25	830	25000	25

Phenanthrene	85-01-8	10	330	10000	10
Anthracene	120-12-7	10	330	10000	10
Carbazole	86-74-8	10	330	10000	10
Di-n-butylphthalate	84-74-2	10	330	10000	10
Fluoranthene	206-44-0	10	330	10000	10
Pyrene	129-00-0	10	330	10000	10
Butylbenzylphthalate	85-68-7	10	330	10000	10
3,3'-Dichlorobenzidine	91-94-1	10	330	10000	10

Semivolatiles	CAS Number	Water µg/L	Low Soil µg/Kg	Med. Soil µg/Kg	On Column (ng)
Benzo(a)anthracene	56-55-3	10	330	10000	10
Chrysene	218-01-9	10	330	10000	10
bis(2-Ethylhexyl)phthalate	117-81-7	10	330	10000	10
Di-n-octylphthalate	117-84-0	10	330	10000	10
Benzo(b)fluoranthene	205-99-2	10	330	10000	10
Benzo(k)fluoranthene	207-08-9	10	330	10000	10
Benzo(a)pyrene	50-32-8	10	330	10000	10
Indeno(1,2,3-cd)-pyrene	193-39-5	10	330	10000	10
Dibenzo(a,h)-anthracene	53-70-3	10	330	10000	10
Benzo(g,h,i)perylene	191-24-2	10	330	10000	10

APPENDIX E

GC PARAMETERS

HP6890

Typical operating parameters for the gas chromatograph are as follows:

DFTPP analysis

PARAMETER	SETTING
Injector temperature	280°C
Column Stability time	0.5 minutes
MS Source Temp	230°C
MS Quad Temp	150°C
MSD Heater Temp	280°C
EPC split-splitless inlet	Pulsed splitless
Injection pulse pressure	20 psi until 0.55 min
Purge flow to split vent	20 ml/min @ 0.50 min
Initial Oven Temp	100°C
Initial Oven Time	0 minutes
Temperature Ramp	20°C/minute for 10 minutes
Final Oven Temp	300°C
Final Hold Time	2 minutes
Column Flow rate	~ 1 mL/min
Electron Energy	70 volts (nominal)
Injector	Front
Injection Volume	1.0 μL
Pre Injection	
Sample Washes	0
Solvent A Washes	1
Solvent B Washes	0
Post Injection	
Solvent A Washes	3
Solvent B Washes	3
Pumps	3
Syringe Size	10 μL
Viscosity	0
Plunger Speed	Fast Injection

Target Compound Analysis

PARAMETER	SETTING
Injector temperature	280°C
Column Stability time	0.5 minutes
MS Source Temp	230°C

MS Quad Temp	150°C
MSD Heater Temp	280°C
EPC split-splitless inlet	Pulsed splitless
Injection pulse pressure	20 psi until 0.55 min
Purge flow to split vent	20 ml/min @ 0.50 min
Initial Oven Temp	40°C
Initial Oven Time	1 minutes
Temperature Ramp	20°C/minute
Final Oven Temp	130°C
Temperature Ramp A	12°C/minute
Final Oven Temp A	270°C
Temperature Ramp B	4°C/minute
Final Oven Temp B	313°C
Final Hold Time	2 minutes
Column Flow rate	~ 1 mL/min
Electron Energy	70 volts (nominal)
Injection Volume	1.0 μL
Pre Injection	
Sample Washes	0
Solvent A Washes	1
Solvent B Washes	0
Post Injection	
Solvent A Washes	3
Solvent B Washes	3
Pumps	3
Syringe Size	10 μL
Viscosity	0
Plunger Speed	Fast Injection

Appendix A-10
Flashpoint

U. S. ENVIRONMENTAL PROTECTION AGENCY
CLP Sample Management Office
P. O. Box 818 - Alexandria, Virginia 22313
Phone: 703/557-2490; FTS/557-2490

SAS Number

SPECIAL ANALYTICAL SERVICES

Client Request

_____ Regional Transmittal _____ Telephone Request

A. EPA Region/Client: Region 9

B. Region Contact: [redacted]

C. Date of Request:

D. Site Name:

E. City/State:

F. 2 Digit Superfund Site Identifier:

Please provide below a description of your request for Special Analytical Services under the Contract Laboratory Program. In order to most efficiently obtain laboratory capability for your request, please address all applicable questions. Incomplete or erroneous information may result in a delay in the processing of your request. If you need to provide additional information not addressed by the questions, please attach additional sheets of paper.

1. General description of analytical service requested:

   The determination of ignitability (flash point) of soil/sludge samples by modified EPA Method 1010 and modified ASTM Method D93-80.

2. Definition and number of work units involved (specify whether whole samples or fraction; whether organics or inorganics; whether aqueous or soil and sediments; and whether low, medium or high concentration):

3. Purpose of analysis (specify whether Superfund [enforcement or remedial action], RCRA, NPDES, etc.):

4. **Estimated date(s) of collection (provide a sampling schedule):**

5. **Estimated date(s) and method of shipment:**

   Federal Express - shipped same day as collection for next day delivery.

6. **Number of days analysis and data required after laboratory receipt of samples:**

   The determination of ignitability should be performed within 14 days after sample receipt at the laboratory.

   Data packages and all other deliverables are required within 35 days from receipt of last sample in each Sample Delivery Group (SDG). A SDG is defined as all samples received within a 14 day period or 20 samples, whichever is reached first.

7. **Analytical protocol required (attach copy if other than a protocol currently used in this program):**

   Method Summary: The sample is heated at a slow, constant rate with continual stirring. A small flame is directed into the cup at regular intervals with simultaneous interruption of stirring. The flash point is the lowest temperature at which application of the test flame causes the vapor above the sample to ignite. The sample is deemed to have flashed when a large flame appears and instantaneously propagates itself over the surface of the sample.

   Follow EPA Method 1010 and ASTM Method D93-80, with the following specification and modifications:

   1. Use a Pensky-Martens Closed Flash Tester and thermometer as described in Section 6 of ASTM Method D93-80.

   2 Weight out an appropriate aliquot of soil/sludge and place it in the test cup. A 30 to 50 gram sample aliquot is recommended.

   3. The ignitability of each sample is to be determined twice. Report the average of these two determinations. If the duplicate results differ by more than 2°C, repeat and report the average of the four determinations.

8. **Special technical instructions (if outside protocol requirements, specify compound names, CAS numbers, detection limits, etc.):**

   a. <u>Calibration Procedure and Criteria</u>: Not applicable.

b. Internal Quality Control Checks, Control Limits and Corrective Actions:

1. The ignitability of a laboratory control sample (LCS), composed of p-xylene, must be determined before any samples are analyzed and at a frequency of one per sample delivery group. The laboratory must report at least three determinations of the ignitability of the p-xylene standard. The laboratory is to report the average of these determinations and the percent relative standard deviation (%RSD). The %RSD is not to exceed 10%.

2. The laboratory must determine the percent moisture of each sample using a separate sample aliquot for this determination.

9. **Analytical results required (if known, specify format for data sheets, QA/QC reports, Chain-of-Custody documentation, etc.) If not completed, format of results will be left to program discretion.**

a. Data Calculations and Reporting Units:

Follow Section 11 of ASTM Method D93-80. Sample results are to be reported in degrees Celsius (°C). All records of determinations and calculations must be legible and sufficient to recalculate all sample results. Include an example of the calculations in the data package.

b. Documentation and Deliverables:

Deliverables (in the form of a purge file - i.e., original documents) for each Sample Delivery Group shall include all deliverables required by the IFB, including, but not limited to:

1. All Sample Tracking Reports (i.e., signed SAS Packing Lists/Chain-of-Custody forms).

2. A copy of the SAS, as provided by SMO (so that any SMO changes will be known). Only the technical portion of the SAS is required.

3. Any telephone logs referring to the samples.

4. A Case Narrative, signed by the laboratory manager or his or her designee, certifying the accuracy and validity of all data reported and describing any problems encountered during the analyses and documenting their resolution(s).

5. Tabulated sample results with units. Report all sample

6. Analysis run logs.

7. Laboratory control sample results with calculated %RSD.

8. Percent moisture determinations.

9. Raw sample data, including:

   a. instrument output
   b. bench sheets and worksheets
   c. tabulated results

10. Other (use additional sheets or attach supplementary information, as needed):

Attached is a copy of the "U. S. EPA Region 9 Laboratory QC Summary Report" form. This form is to be completed by the Laboratory Manager or his/her designee and submitted with each data package. The form is to reflect the conditions contained within the data package with which it is submitted. Laboratories may make additional copies of this form as needed.

11. Name of sampling/shipping contact:

Phone: ( )

12. Data Requirements:

Parameter	Contract Required Detection Limit
Not applicable.	

13. QC Requirements:

QC Required	Frequency of QC	Limits (% or Conc.)
LCS	Beginning of analysis and 1 per SDG	≤10% RSD

14. Action required if limits are exceeded:

If above control limits are exceeded, take appropriate actions to identify the problem. Corrective action should be taken before additional samples are analyzed.

Appendix A-11
pH

USEPA REGION 9 LABORATORY
RICHMOND, CALIFORNIA

STANDARD OPERATING PROCEDURE 582

pH in SOLID SAMPLES

Prepared by: _____ _____
Osellie L. Salvador, ESAT Region 9, ICF Consulting — Date

Review by: _____ _____
Richard Bauer, Chemistry Team Leader — Date

Approved by: _____ _____
Brenda Bettencourt, Laboratory Director — Date

Periodic Review:

Signature	Title	Date

STANDARD OPERATING PROCEDURE 582

pH in SOLID SAMPLES

This SOP was prepared by ICF Consulting for the United States Environmental Protection Agency (USEPA) under the Environmental Services Assistance Team (ESAT) contract (EPA contract No. 68-W-01-028).

APPROVED BY:

Osellie L. Salvador, Inorganic Group Leader	Date
Surender Kaushik, QA Task Manager	Date
Jerry Vail, ESAT Program Manager	Date

ESAT Document Control Number: B0101023-0320

CONTENTS

1 SCOPE AND APPLICATION 4

2 METHOD SUMMARY 4

3 DEFINITIONS 4

4 HEALTH AND SAFETY 5

5 SAMPLE HANDLING AND PRESERVATION 5

6 INTERFERENCES 5

7 APPARATUS AND MATERIALS 6

8 QUALITY CONTROL PROCEDURES 6

9 ANALYTICAL PROCEDURES 7

10 DOCUMENTATION 9

11 REFERENCES 10

Attachment A - Deviations From Reference Method

Attachment B - pH Reporting Benchsheet

Attachment C - Analytical Spreadsheet

Attachment D - QC Summary Page

1 SCOPE AND APPLICATION

1.1 This procedure is applicable for measuring the pH of multiphase wastes where the aqueous phase constitutes at least 20% of the total volume of the sample. This procedure is based on EPA Method 9040B.

1.2 This procedure is also applicable for measuring pH in soils, sediments, sludges or other solid samples where water constitutes less than 20% of the total volume of the sample. This procedure is based on EPA Method 9045C.

2 METHOD SUMMARY

2.1 The pH of a sample is determined electrometrically using a combination electrode attached to a pH meter with automatic temperature compensation (ATC).

3 DEFINITIONS

3.1 Analytical Sample - Any sample in which pH is being determined, excluding QC reference samples.

3.2 Automatic Temperature Compensation (ATC) - A probe that electronically adjusts for differences in temperature in the sample.

3.3 Field Duplicates (FD) - Two separate samples collected at the same time and place under identical circumstances and treated exactly the same throughout field and laboratory procedures. Analyses of field duplicates indicate the precision associated with sample collection and storage as well as with laboratory procedures.

3.4 Instrument Performance Check Solution (IPC) - Periodic analysis of the calibration standards performed to monitor calibration drift.

3.5 Laboratory Duplicate (LD) - An aliquot of sample analyzed separately with identical procedures. Analysis of the sample and LD indicates precision associated with the laboratory procedures, but not with sample collection, preservation or storage procedures.

3.6 Quality Control Sample (QCS) - A secondary solution containing a known pH. The QCS is obtained from a commercial source. It is used to check laboratory performance.

3.7 Sample Delivery Group (SDG) - A group of twenty samples or less from a project that is sent to the laboratory for analysis.

4 HEALTH AND SAFETY

4.1 Safety precautions must be taken when handling solutions and samples. Protective clothing including lab coats, safety glasses and gloves must always be worn. Contact lenses must not be worn. If solutions come into contact with your eyes, flush with water continuously for 15 minutes. If solutions come in contact with your skin, wash thoroughly with soap and water. Contact your Group Leader or Health & Safety and Env. Compliance Task Manager to determine if additional treatment is required.

5 SAMPLE HANDLING AND PRESERVATION

5.1 Samples are received at the Region 9 Laboratory by EPA staff in Room 503. Sample IDs and dates and times of collection are verified against the chain-of-custody form.

5.2 Samples must be stored at 4 ± 2 C.

5.3 Samples must be analyzed as soon as possible.

6 INTERFERENCES

6.1 The electrode, in general, is not subject to interferences from color, turbidity, colloidal matter, oxidants, reductants or high salinity.

6.2 Coatings of oily material or particulate matter can impair electrode response time. These coatings may be removed by gently wiping or washing the electrode with detergent. An additional treatment with hydrochloric acid (1+9) may be necessary to remove any remaining film.

6.3 The sample temperature affects pH measurement in two manners:

1) The electrode response will vary with changes in temperature. Using a pH meter with ATC can minimize this variability.
2) Sample pH is dependent upon the sample temperature, i.e., the true pH of a sample is different at different temperatures. Consequently, the sample temperature must be recorded as part of the pH measurement process.

7 APPARATUS AND MATERIALS

7.1 Apparatus

7.1.1 Orion Expandable IonAnalyzer EA 940 pH meter or equivalent.
7.1.2 Orion Combination pH Electrode Model 91-56 or equivalent.
7.1.3 Automatic Temperature Compensation probe, Epoxy Body, Beckman No. 592373 or equivalent.

7.2 Glassware and Incidentals

7.2.1 Plastic or Teflon spray bottle.
7.2.2 Beakers - 50mL or 100mL capacity.
7.2.3 Magnetic Stirrer Plate.
7.2.4 Magnetic Stirrer Bars - 0.5" to 1" in length.
7.2.5 Analytical Balance: capable of weighing 0.1 g.

7.3 Standards and Reagents

Reagents may contain impurities which might affect analytical data. Only high-purity reagents that conform to the American Chemical Society (ACS) specifications should be used.

7.3.1 pH Buffers - pH buffers at 2, 4, 7,10 and 12 pH (Fisher or equivalent).
7.3.2 Quality Control Sample (QCS) - A second source pH buffer (pH 7) obtained from a commercial vendor such as E.R.A., Inorganic Ventures or equivalent.
7.3.3 Orion Storage Solution or equivalent.
7.3.4 Orion Filling Solution (4M KCl saturated with AgCl) or equivalent.
7.3.5 Reagent water - All references to water in this method refer to ASTM Type II grade water.

8 QUALITY CONTROL PROCEDURES

8.1 EPA Region 9 Laboratory operates a formal quality control (QC) program. As it relates to this SOP, the QC program consists of an initial demonstration of laboratory capability (refer to R9 SOP 880), and the periodic analysis of laboratory solutions as a continuing check on performance.

8.2 Routine Analytical Quality Control

8.2.1 QCS - The pH in a QCS sample must be measured daily or once per batch of 20 samples, whichever is more frequent. The QCS must have a pH value within the range of the current calibration (normally pH 7). If the measured concentrations are not within $\pm$0.1 pH units, the

method performance is unacceptable. The source of the problem must be identified and corrected before proceeding with analyses.

8.2.2 LD - Sample homogeneity can affect the quality and interpretation of the data. LD results can be used to assess sample homogeneity. One LD must be prepared for every 20 routine samples of the same matrix in a sample batch.

The pH readings on duplicate samples should agree within 0.1 pH units of the original sample. Otherwise, reanalyze using a fresh aliquot. If four different aliquots of the same sample show results that differ by more than 0.1 pH units, the problem may be the sample. Flag all associated sample results. Document actions in the report narrative.

8.2.3 Instrument Performance Check - Measure the pH of the calibration standards immediately after calibration, after every 10 samples and at the end of every analysis sequence. If the measured concentrations are not within ±0.1 pH units of the true values, the method performance is unacceptable. Re-calibrate the system and re-analyze all samples since the last acceptable IPC analysis. If some samples have a pH below 4, measure a buffer at pH 2 as part of the Instrument Performance Check. If some samples have a pH of above 10, measure a buffer at pH 12 as part of the Instrument Performance Check.

9 ANALYTICAL PROCEDURES

9.1 The analyst is advised to follow the recommended operating conditions provided by the instrument manufacturer. It is the responsibility of the analyst to verify that the instrument configuration and operating conditions satisfy the analytical requirements, and to maintain quality control data verifying instrument performance.

9.2 Method Characterization - Prior to routine use, it must be demonstrated that the pH meter, electrode, and ATC are in working condition.

9.2.1 ATC Temperature Measurement - Measure the temperature of two solutions (room temperature water and ice water) using both the ATC probe and a NIST-traceable thermometer. Compare the measurements for the ATC probe and thermometer. If the difference exceeds 0.5°C, refer to the ATC manual for corrective action.

9.3 Calibration and Standardization - The analyst must select the appropriate calibration range for the samples. The pH meter may be calibrated with the pH 4 and pH 7 buffers or with pH 7 and pH 10 buffers. Every sample must be analyzed under a calibration which brackets the sample pH. This may require analyzing a set of samples under one calibration, recalibrating the meter using the other calibration range, and reanalyzing the samples which have sample pHs within the second

calibration range. Samples with pH below 4, calibrate with pH 4 and pH 7 buffers and for samples with pH above 10, calibrate with pH 7 and pH 10 buffers.

9.3.1 Place a clean magnetic stirrer bar into a clean 50-mL beaker and pour about 30 to 40-mL of the lowest of the two calibration buffer to be used for calibration. Immerse the ATC probe and the pH electrode into the buffer and measure the pH while the buffer is being gently stirred (i.e., no visible vortex). Perform a temperature calibration by pressing **speed** and the number **7** on the pH meter. Press **yes** when the question "SET TEMPERATURE?" appears on the screen. The temperature reading on the buffer will appear on the screen. Press **yes** if the temperature reading is correct. If it is incorrect, punch in the correct temperature. Use a NIST-traceable thermometer to verify the temperature of the buffer. Record the temperature of both the ATC probe and the NIST thermometer and the time of analysis in the pH Analysis Run Log.

9.3.2 To calibrate with the buffer, press **speed** and **0**. Press **yes** to calibrate the pH and enter the number of pH buffers to be used, which is **2**. Press the **yes** button to do automatic calibration, and **yes** again to indicate that the electrode is in buffer 1 (the lower pH solution). When the pH reading is stable, the instrument will indicate the determined value of the buffer and what it should be according to its temperature. It will calibrate with that number when you press **yes**. Rinse the pH electrode and the ATC probe with reagent water and blot them dry with Kimwipes. Place a clean magnetic stirrer bar into a 50-mL beaker and pour approximately 30 to 40-mL of buffer 2 (the higher pH solution). Immerse the ATC probe and the pH electrode into the buffer and measure the pH while the buffer is being gently stirred. Calibrate with the buffer 2 by pressing **yes** to "ELECTRODE IN BUFFER 2?". Press **yes** again to calibrate with the number the pH meter determines the reading should be. The determined slope will appear.

9.3.3 Review the calibration slope results. The calibration slope must be within 95-105%. If the slope is acceptable press **yes** to continue. Record the slope in the pH Analysis Run Log. If the slope is unacceptable, troubleshoot the system and re-calibrate. An acceptable calibration must be obtained before samples can be analyzed. Rinse the pH electrode and the ATC probe with reagent water and blot them dry with Kimwipes.

9.4 Sample Preparation and Analysis

9.4.1 To determine if the aqueous phase of the sample constitutes less than 20% or more of the total sample volume, do the following: Transfer the sample in a beaker and approximately determine the volume of the aqueous phase and compare it to the total volume of the sample. If aqueous phase is less than 20% follow Section 9.4.3 and if it is at least 20% follow Section 9.4.2.

9.4.2 For multiphase samples where the aqueous phase constitutes at least 20% of the total volume of the sample, no preparation step is needed. Either pour the sample into a beaker or immerse the electrode directly into the sample container and follow Section 9.4.4.

9.4.3 For samples where water constitutes less than 20% of the total volume of the sample, measure 20 g of the sample in a 50-mL beaker and add 20 mL of reagent water, cover and stir the suspension for 5 minutes and let it stand for about 30 minutes to settle out the suspension or filter/centrifuge off the aqueous phase for pH measurement and follow Section 9.4.4.

Note: If the sample is hygroscopic and absorbs all the reagent water, begin the procedure again using 20 g of sample and 40 mL of reagent water.

9.4.4 Immerse the ATC probe and the pH electrode into the beaker containing the sample to be measured just below the suspension and measure the pH. When a stable reading is obtained, record the time, temperature and pH. Rinse the pH electrode and the ATC probe with reagent water and blot the probes dry with Kimwipes after each sample analysis. A typical run sequence is listed in the following table.

Seq.	Description	Seq.	Description	Seq.	Description
1	IPC-Low Buffer	11	S7	21	S15
2	IPC-High Buffer	12	S8	22	S16
3	QCS	13	IPC-Low Buffer	23	S17
4	S1	14	IPC-High Buffer	24	S18
5	S1-LD	15	S9	25	IPC-Low Buffer
6	S2	16	S10	26	IPC-High Buffer
7	S3	17	S11		
8	S4	18	S12		
9	S5	19	S13		
10	S6	20	S14		

9.5 Data Reduction and Reporting - The pH meter reports pH results directly in pH units and temperature results in °C. Record and report pH results to 0.1 pH unit and the temperature to the nearest degree. For rounding results, adhere to the following rules:

a) If the number following those to be retained is less than 5, round down;
b) If the number following those to be retained is greater than 5, round up; or

c) If the number following the last digit to be retained is equal to 5, round down if the digit is even, or round up if the digit is odd.

10 DOCUMENTATION

10.1 pH Analysis Run Log - Entries are made for the pH buffer solutions, case number, SDG number, slope of the calibration, lab sample IDs, client sample IDs, sample volume in mL, time of analysis, pH result, analyst initials, date of analysis and comments, if any. The run log is maintained in Room 304 (Attachment B).

10.2 Report Narrative and Deliverable

The data package consists of the report narrative, forms, and data, as listed in the table below.

Data Package Contents
Report Narrative: Discusses any problems encountered, both technical and administrative, the corrective action taken, and the resolution. All universal analytical flags should also be discussed in the report narrative.
Tabulated sample results: On an analytical spreadsheet, with units of pH, sample collection dates, client sample IDs, laboratory IDs and station locations. (Attachment C)
Duplicate results on a QC summary form with calculated relative percent difference (RPD). (Attachment D)
QCS results on a QC summary form with true value and found result. (Attachment D)
Raw sample, standard and QC data, including bench sheets and any work sheets, if applicable.

11 REFERENCES

11.1 SW-846 Method 9040B, Test Methods for Evaluating Solid Wastes, Physical/Chemical Methods, Revision 2, January 1995.
11.2 SW-846 Method 9045C, Test Methods for Evaluating Solid Wastes, Physical/Chemical Methods, Revision 3, January 1995.
11.3 Orion Combination pH Electrode Instruction Manual, 1991 Orion Research, Incorporated.
11.4 EA 940 Expandable IonAnalyzer Instruction Manual, 1985 Orion Research, Incorporated..
11.5 *Method 4500-H^+ pH Value*, Standard Methods for the Examination of Water and Wastewater, 20th Edition, 1998.
11.6 Region 9 SOP 840, *Notebook Documentation and Control.*
11.7 Region 9 SOP 880, *Demonstration of Laboratory Capability and Analyst Proficiency.*

Attachment A
Deviations From Reference Method

A.1 This SOP includes routine QC procedures based on EPA Region 9 Laboratory policy in addition to those listed in EPA Method 9040B and 9045C. This include the analysis of a laboratory duplicate.

ATTACHMENT B

pH ANALYSIS RUN LOG

pH Buffer #1: _____ Case: _____

pH Buffer #2: _____ SDG: _____

Slope: _____

	Lab ID	EPA ID	Soil Weight (g)	Water Volume (mL)	Time	pH	Comments
1							
2							
3							
4							
5							
6							
7							
8							
9							
10							
11							
12							
13							
14							
15							
16							
17							
18							
19							
20							

Analyst: _____ Date: _____

BOOK #3

filename: pH_book.log Reviewed by:

ATTACHMENT C

EPA REGION 9 LABORATORY-RICHMOND, CA
SUMMARY OF ANALYTICAL RESULTS

Case Number: R01S36 **Analysis:** pH
Site: LYNX/HASSAYAMPA WATERSHED **Matrix:** Soil/Sediment
SDG: 01134B
Date: 06/11/01

Sample No.	N/A			N/A			N/A			N/A			N/A			N/A		
Sample I.D.	HR-GGV-SS-02			HR-SC-SS-02			HR-MCT-SD-BCMD			HR-SUN-SS-01			HR-MCT-SD-BCSCD			HR-MCT-SD-01		
Lab Sample I.D.	AB30980			AB30981			AB30982			AB30983			AB30984			AB30985		
Date of Collection	05/10/01			05/10/01			05/10/01			05/10/01			05/10/01			05/10/01		
Units	units of pH			units of pH			units of pH			units of pH			units of pH			units of pH		
Analyte	Result	Q	Com	Result	Q	Com	Result	Q	Com	Result	Q	Com	Result	Q	Com	Result	Q	Com
pH	6.9			2.8			3.2			3.6			4.1			2.9		

Com - Comments refer to the corresponding section in the report narrative for each letter.
N/A - Not Applicable.
N/R - Not Required.
Q - Refer to data qualifiers.
U - The parameter was analyzed for, but was not detected; The associated value is the sample quantitation limit, adjusted for dilution, if any.
J - The associated value is an estimated quantity.

ATTACHMENT D

US E.P.A.
REGION 9 LABORATORY
June 11, 2001
Case Number: R01S36
SDG: 01130B

Laboratory Duplicate Sample

Analyzed	Sample ID	Analysis	Sample	Duplicate	Difference	Q
05/14/01	HR-LH-SD-	pH	6.53	6.59	0.06	
05/18/01	HR-WM-SD-	pH	3.03	3.07	0.04	
05/18/01	HR-GGV-	pH	6.79	6.85	0.06	

Quality Control Sample (pH)

Analyzed Date	Sample ID	True Value (units of pH)	Result (units of pH)	Difference (units of pH)
05/14/01	QCS	7.0	7.01	0.01
05/18/01	QCS	7.0	6.99	0.01
05/18/01	QCS	7.0	7.01	0.01
06/05/01	QCS	4.0	4.00	0

Appendix A-12
8260 VOCs

USEPA REGION 9 LABORATORY
RICHMOND, CALIFORNIA

STANDARD OPERATING PROCEDURE #305

VOLATILE ORGANICS ANALYSIS

	Signature & Title	
Prepared by:	_____ Kathy O'Brien, ESAT Region 9, Lockheed Martin	_____ Date
Reviewed by:	_____ Richard Bauer, Chemistry Team Leader	_____ Date
Approved by:	_____ Brenda Bettencourt, Lab. Director	_____ Date

Periodic Review:

Signature	Title	Date
_____	_____	_____
_____	_____	_____
_____	_____	_____

STANDARD OPERATING PROCEDURE #305

VOLATILE ORGANICS ANALYSIS

This SOP was prepared by Lockheed Martin for the United States Environmental Protection Agency (USEPA) under the Environmental Services Assistance Team (ESAT) contract (EPA contract No. 68D60005).

APPROVED BY:

_____ _____
Kathy O'Brien, QA/QC Coordinator, Lockheed Martin Date

_____ _____
Jack Berges, ESAT Team Manager, Lockheed Martin Date

ESAT Document Control Number: ESAT-9B-3094

TABLE OF CONTENTS

1 SCOPE AND APPLICATION
2 METHOD SUMMARY
3 DEFINITIONS
4 HEALTH AND SAFETY
5 SAMPLE HANDLING AND PRESERVATION
6 INTERFERENCES
7 APPARATUS AND MATERIALS
8 QUALITY CONTROL
- 8.1 Mass calibration.
- 8.2 GC/MS System Performance Check (BFB analysis.)
- 8.3 Initial calibration.
- 8.4 Continuing Calibration
- 8.5 Laboratory Control Sample (LCS)
- 8.6 Low Level Quantitation Verification Standard.
- 8.7 Method blank analysis.
- 8.8 Storage blank analysis.
- 8.9 Instrument blanks
- 8.10 Internal standard recovery.
- 8.11 System monitoring compound recovery.
- 8.12 Matrix spike and matrix spike duplicate analysis.
- 8.13 Sample dilution.
- 8.14 Review of Target Analytes
- 8.15 Review the Tentatively Identified Compound

9 ANALYTICAL PROCEDURES
- 9.1 Analytical system preparation
- 9.2 Leak Checking
- 9.3 GC/MS Performance Check
- 9.4 Analysis of waters (5 mL sample volume).
- 9.5 Analysis of low detection limit waters (25 mL)
- 9.6 Analysis of low level soils
- 9.7 Analysis of soils using medium level soil extraction method
- 9.8 Autosampler operation

10 DOCUMENTATION
11 REFERENCES
12 DEVIATIONS FROM REFERENCE METHOD

APPENDIX A - 5 mL Water and Soil Calibration Criteria
APPENDIX B - 25 mL Water Calibration Criteria
ATTACHMENT A - Target Compound List For Volatile Organics Analysis
ATTACHMENT B - Purge and Trap Concentrator Parameters
ATTACHMENT C - Autosampler Parameters
ATTACHMENT D - GC Parameters
ATTACHMENT E - Data File Naming Convention

1 SCOPE AND APPLICATION

The function of the Region 9 Volatile Organics laboratory is to analyze water, soil and sediment samples for volatile organic compounds in support of the EPA's Superfund, RCRA, WQM, NPDES, UIC, and Drinking Water programs. The applicability of these procedures to specific project data quality objectives must be assessed on a case by case basis. The QC criteria specified in the procedures do not meet compliance criteria for either drinking water or NPDES monitoring projects.

2 METHOD SUMMARY

This Standard Operating Procedure (SOP) describes the procedures used for the analysis of volatile organic compounds in the Region 9 Laboratory. Volatile organic compounds are purged from water samples in a fritted sparge cell. Low level water samples use a 25 mL sample volume. Low level soil samples are purged by adding a 5-mL aliquot of water to 5 grams of the sample, and purging with a needle sparger while heating to 40°C. Medium level soil samples are extracted in methanol and an aliquot of the extract is purged out of 5 mL of water. An inert gas (helium) is bubbled through the sample in the sparge cell, which causes the purgeable volatile organics to be transferred from the aqueous phase to the vapor phase. The vapor phase is swept through a column, or trap, containing a sorbent material at ambient temperature, where the volatile organics are trapped. After the purging of the sample is completed, the sorbent trap is heated and back flushed with helium which desorbs the volatile organics onto a capillary column in a gas chromatograph (GC). The GC is temperature programmed, which separates the volatile organic compounds. They are then introduced into, and detected by, a mass spectrometer (MS).

The samples are spiked with internal standards (IS) and system monitoring compounds (SMC) before they are purged. The target volatile organic compounds and system monitoring compounds are identified in the sample by analyzing standards under the exact same conditions employed for samples, and comparing the resulting mass spectra and GC retention times. A response factor is established for each target and system monitoring compound during the initial and continuing calibrations by comparing the MS response of the primary ion produced by the target and system monitoring compounds to the MS response for the primary ion produced by the associated internal standard. Each target and system monitoring compound is quantitated by comparing the responses of the target and system monitoring compound responses to the internal standard responses, using the response factors from the most recent continuing calibration.

Non-target compounds are identified by comparing the resulting mass spectra of the non-target compound to the mass spectra contained in the National Institute of Standards and Technology (NIST) Library in the MS database. An estimated quantitation is performed for the non-target compounds by comparing the total MS response to the nearest internal standard total MS response, assuming a response factor of 1.0.

3 DEFINITIONS

3.1	GC/MS	Gas Chromatograph / Mass Spectrometer
3.2	BFB	4-Bromofluorobenzene, the compound used as the system performance check for the GC/MS. Also used as a surrogate.

3.3	IS	Internal Standard
3.4	SMC	System Monitoring Compound, also known as Surrogate
3.5	SDG	Sample Delivery Group
3.6	GC	Gas Chromatograph
3.7	MS	Mass Spectrometer
3.8	MS/MSD	Matrix spike and matrix spike duplicate
3.9	ESAT	Environmental Services Assistance Team
3.10	FC43	Perfluorotributylamine. Compound used to tune the MS.
3.11	QL	Quantitation Limit (see Attachment A).
3.12	RIC	Reconstructed Ion Chromatogram
3.13	NIST	National Institute of Standards and Technology
3.14	CLP SOW	Contract Laboratory Program Statement of Work
3.15	LCS	Laboratory control sample
3.16	EPA	Environmental Protection Agency
3.17	WAM	Work Assignment Manager
3.18	USEPA	United States Environmental Protection Agency
3.19	SOP	Standard Operating Procedure
3.20	MSDS	Material safety data sheets
3.21	PTFE	polytetrafluoroethylene
3.22	%RSD	percent relative standard deviation
3.23	%D	percent difference
3.24	RRF	relative response factor
3.25	RPD	relative percent difference

4 HEALTH & SAFETY

4.1 The toxicity or carcinogenicity of each reagent used in this method has not been precisely defined; however, each chemical compound should be treated as a potential health hazard. From this viewpoint, exposure to these chemicals should be minimized through the use of personal protective equipment and laboratory engineering and design. A reference file of material safety data sheets (MSDS) is available to all personnel involved in the chemical analysis and can be found in the library (Room 118) or Room 413.

4.2 The following analytes covered by this method have been tentatively classified as known or suspected, human or mammalian carcinogens: benzene, carbon tetrachloride, chloroform, methylene chloride and vinyl chloride. Primary standards of these toxic compounds must be prepared in a hood. Routine procedures in this SOP do not require contact with concentrated or neat solutions of these materials. All standard preparation procedures associated with this SOP should be performed in a hood.

4.3 Methanol is the primary solvent used for the preparation of standards and for soil sample extraction in these procedures. Methanol is harmful if inhaled and may be fatal or cause blindness if ingested. Symptoms of overexposure via inhalation are drowsiness and intoxication, headache, visual disturbances leading to blindness, coughing and shortness of breath, collapse, and death at high concentrations. Skin contact may result in absorption producing toxic effects. Repeated skin contact

Region 9 GC/MS Volatiles Analytical Systems

System Name	Incos 50A	Incos XL	HP5973H	HP5973J
Purge and Trap Concentrator	Tekmar LSC 2000	OI 4560	Hewlett Packard (Tekmar 3000)	Hewlett Packard (Tekmar 3000)
Autosampler	Tekmar ALS 2016	OI DPM-16	Varian Archon	Varian Archon
Gas Chromatograph	HP 5890	Varian 3400	HP 6890 Plus	HP 6890 Plus
Mass Spectrometer	Finnigan Incos 50	Finnigan Incos XL	Hewlett Packard HP 5973	Hewlett Packard HP 5973
Data System	Galaxy 2000/HP Chemstation	Galaxy 2000/HP Chemstation	HP Chemstation	HP Chemstation
Column type	DB-624 75M x 0.53 mm, 3 micron film	DB-624 30M x 0.32 mm, 1.8 micron film	DB-624 25M x 0.2mm id 1.12μm film	DB-624 25M x 0.2mm id 1.12μm film

Other GC/MS systems with similar configurations can be used to analyze samples following this SOP as long as the instrumentation meets the QC limits of this SOP.

7.2 Standard solutions (Region 9 Lab SOP 255).

7.2.1 Internal Standard and System Monitoring Compounds Solution (IS/SMC 50 ng/μL).

7.2.2 Internal Standard and System Monitoring Compound Solution (IS/SMC 250 ng/μL).

7.2.3 Internal Standard and System Monitoring Compound Solution (IS/SMC 125 ng/μL).

7.2.4 Matrix Spike Solution (MS Solution, 50 ng/μL).

7.2.5 Calibration Mix (Low level RAP CAL Mix, 25/250 ng/μL). The concentration of acetone, 2-butanone, 4-methyl-2-pentanone, and 2-hexanone is 250 ng/μL; and the concentration of the rest of the analytes is 25 ng/μL.

7.2.6 Calibration Mix (RAS CAL Mix, 50 ng/μL).

7.2.7 4-Bromofluorobenzene Tuning Solution (BFB Solution, 50 ng/μL).

7.2.8 Low level Laboratory Control Sample Spike Solution (LCS Spike Solution, 25/250 ng/μL). The concentration of acetone, 2-butanone, 4-methyl-2-pentanone, and 2-hexanone is 250 ng/μL; and the concentration of the rest of the analytes is 25 ng/μL.

7.2.9 RAS Laboratory Control Sample Spike Solution (LCS Spike Solution, 50 ng/μL).

7.3 Organic-free method blank water (Region 9 Lab SOP 205).

7.4 Gas-tight syringes (5-μL, 10-μL, 25-μL, 50-μL, 100-μL, 250-μL, 500-μL, 1-mL, 5-mL, and 25-mL).

7.5 Fritted sparge vessels (5-mL and 25-mL).

7.6 Fritless sparge vessels (5-mL and 25-mL).

7.7 Soil sparge kits.

7.8 Screw-cap vials, 40-mL, with teflon-lined septa, pre-cleaned with sodium bisulfate preservative and magnetic stir-bar (ESS Part # QC-4039-5035, or equivalent).

7.9 Stainless steel spatulas.

7.10 Disposable Pasteur pipettes.

7.11 Top-loading balance (weighing to the nearest 0.01 g).

7.12 Methanol (Purge & Trap grade).

7.13 pH paper (pH 0-14 range).

7.14 Trap K (VOCARB 3000, or equivalent).

7.15 Trap I (VOCARB 4000, or equivalent)

7.16 Sand, sea washed (VWR Cat. # VW3358-3, or equivalent).

8 QUALITY CONTROL

This section describes the QA/QC criteria which shall be followed in the analysis of samples for volatile organic compounds.

8.1 Mass calibration.

8.1.1 Mass calibration of the analytical system shall be performed whenever the mass spectrometer is shut down, or whenever there is a mass miss-assignment. Mass calibration is performed to ensure the accurate assignment of masses to ions generated in the ion volume of the mass spectrometer. Perfluorotributylamine (FC43) is the compound which shall be used to perform the mass calibration of the instrument. The FC43 spectrum must meet the following criteria:

Mass	Target % of Mass 69
69	100

131	25.0-70.0
219	25.0-70.0
414	1.4-4.0
502	0.8-4.0

Isotope Ratio

Mass Ratio	Target %
70/69	0.8-1.3
132/131	2.0-3.4
220/219	3.5-5.2
415/414	7.2-10.8
503/502	8.1-12.1

8.1.2 If the FC43 spectrum does not meet the criteria listed above, corrective action must be taken. The corrective action may be as simple as adjusting the voltages/retuning the MS. If retuning the MS does not produce adequate FC43 spectra, further maintenance such as cleaning the ion source and rods may be required.

8.2 GC/MS System Performance Check (BFB analysis.)

8.2.1 Prior to the analysis of any calibration standards, blanks, and samples (including MS/MSDs), the GC/MS system must meet the mass spectral ion abundance criteria for bromofluorobenzene (BFB). Proper tuning of the instrument is necessary to produce standardized fragmentation patterns of target and non-target compounds.

8.2.2 Frequency of GC/MS Performance Check.

BFB must be injected once at the beginning of each 12-hour period during which standards, blanks and samples are to analyzed. The twelve-hour time period begins at the moment of injection of the BFB. The time period ends after twelve hours have elapsed. If a sample is injected after the 12-hour time period has elapsed it must be re-analyzed.

8.2.3 Analyze the BFB according to Section 9 of this SOP.

8.2.4 The ion abundance ratios must meet the following criteria.

Mass (m/z)	Relative Ion Abundance Criteria
50	8.0 - 40.0 percent of mass 95
75	30.0 - 66.0 percent of mass 95
95	Base peak, 100 percent relative abundance
96	5.0 - 9.0 percent of mass 95
173	less than 2 percent of mass 174
174 *	50.0 - 120.0 percent of mass 95
175	4.0 - 9.0 percent of mass 174
176	93.0 - 101.0 percent of mass 174
177	5.0 - 9.0 percent of mass 176

*All ion abundances must be normalized to m/z 95, the nominal base peak, even though the ion abundance of m/z 174 may be up to 120 percent that of m/z 95.

If the ion abundances fail to meet the criteria listed above the BFB chromatogram should be examined for any obvious chromatographic problems (e.g. bad injection leading to poor response etc.). If the problem is determined to be related to poor chromatography take the necessary corrective action and re-analyze the BFB. If the BFB continues to fail the ion abundance criteria retune the mass spectrometer. It may also be necessary to clean the ion source, or take other corrective action to achieve the ion abundance criteria.

8.3 Initial calibration.

8.3.1 Each GC/MS system must be calibrated whenever corrective action which may change instrument response (e.g., ion source cleaning, column replacement, etc.) is performed or if the continuing calibration acceptance criteria can not be met.

8.3.2 For 5-mL water (and medium level soils) and low level soil analysis, the initial and continuing calibration criteria are listed in Appendix A.

8.3.3 For 25-mL water analysis, the initial and continuing calibration criteria are listed in Appendix B. A four point calibration at 2 µg/L, 5 µg/L 10µg/L and 25 µg/L is performed for DBCP. All other compounds require a five point calibration.

8.3.4 Analyze the initial calibration standards according to Section 9 of this SOP.

8.3.5 The data system calculates the relative response factor (RRF) for each target compound and system monitoring compound for all five calibration standards using equation 1. The quantitation ions and internal standard assignments are listed in Attachment A.

Eq. 1

$$RRF = (A_x)(C_{is}) / (A_{is})(C_x)$$

Where
Ax = Area of quantitation ion of compound x
Ais = Area of quantitation ion for associated internal standard
Cx = Concentration of compound x
Cis = Concentration of the associated internal standard

8.3.6 Calculate the average RRF for all analytes

8.3.7 Calculate the percent relative standard deviation (%RSD) of the RRF values for each compound using equation 2.

EQ. 2

$$\%RSD = (SD/ RRF_{avg})*100$$

$$SD = \sqrt{\frac{\sum_{i=1}^{n} (x_i - x_{ave})^2}{n-1}}$$

8.3.8 Immediately after the initial calibration is performed, the data files shall be processed and checked to ensure that all of the minimum RRFs and maximum %RSD criteria have been satisfied (Appendices A and B). Up to two volatile compounds may fail to meet the minimum RRF and maximum %RSD criteria listed in Appendix A or Appendix B. However, these two must have an average RRF greater than or equal to 0.010, and the %RSDs must be less than or equal to 40%. If any of the criteria have not been met because of a single concentration point in the curve, then that single point can be reanalyzed once, and the data checked against the criteria. If the failure is repeated (or the problem is not isolated to one calibration point) the system must be repaired so that the criteria are satisfied before any samples are analyzed. If repairs are made to the system, then a new initial calibration must be performed. Check the initial calibration for misidentified peaks due to retention time shifts. The most commonly misassigned compounds are the 1,3- and 1,4-dichlorobenzenes and 4-methyl-2-pentanone and 2-hexanone.

8.3.9 No quantitation ion may saturate the detector, with the exceptions of combined xylenes (*meta*- and *para*-xylenes).

8.3.10 If the initial calibration meets all the specified criteria, the remainder of the 12-hour analytical period may be used for the analysis of blanks, LCS, QL standards and samples, using the calibration standard that is the same concentration as the continuing calibration to quantitate the blank and sample data.

8.4 Continuing Calibration

8.4.1 A continuing calibration standard must be analyzed at the beginning of each 12-hour analytical period (see Section 8.2.2 for definition of 12-hour time period). The continuing calibration standard is used to quantitate analytical results during the associated 12-hour time period.

8.4.2 For 5-mL water (and medium level soils) and low level soil analysis, the initial and continuing calibrations must meet the criteria listed in Appendix A.

8.4.3 For 25-mL water analysis, the initial and continuing calibrations must meet the criteria listed in Appendix B.

8.4.4 Analyze the continuing calibration standard according to Section 9 of this SOP.

8.4.5 Calculate the relative response factor (RRF) for each target compound and system monitoring compound using equation 1. The quantitation ions and internal standard assignments are listed in Attachment A.

8.4.6 Calculate the percent difference (%D) between the continuing calibration RRF and the most recent initial calibration average RRF for each target compound and surrogate using equation 3.

EQ 3.

$$\%D = \frac{RRF_c - RRF_{avg}}{RRF_{avg}} \times 100$$

8.4.7 The minimum relative response factors must be satisfied. The percent difference must be calculated and compared with the maximum percent difference criteria listed in Appendix A or Appendix B. Up to two volatile compounds may fail to meet the minimum RRF and maximum %D criteria. However, the RRFs of those two compounds must be greater than or equal to 0.010, and the %Ds must be less than or equal to 40% for the continuing calibration to be acceptable. Compounds which have minimum RRF requirements but no %D requirements are not counted as part of the two allowable failing compounds. If any of the criteria is not satisfied a second continuing calibration may be analyzed. Repeated failure requires the analysis of a new initial calibration. If repairs to the system are required then a new initial calibration must be performed.

The analyst should observe trends in the data such as declining response, erratic relative response, loss of classes of compounds, etc. which may signal the need for instrument maintenance.

Check the continuing calibrations for mis-identified peaks due to retention time shifts. The most commonly mis-assigned compounds are the 1,3- and 1,4-dichlorobenzenes and 4-methyl-2-pentanone and 2-hexanone.

8.5 Laboratory Control Sample (LCS)

A LCS is analyzed daily to demonstrate that the calibration standards used to calibrate the instrument are appropriate. Specifically the LCS verifies that the standards include the appropriate compounds at the correct concentration. This is done by preparing the LCS spiking mixture from a source (or sources) entirely separate from those used to calibrate the instrument. The LCS must be analyzed immediately after the initial or continuing calibrations.

8.5.1 Prepare the LCS as a method blank except add the volume of the LCS standard which results in a concentration equal to the concentration of the mid-point (level 3) of the calibration range.

8.5.2 Analyze the LCS exactly as a sample is analyzed. Quantitate the LCS using the daily calibration standard RRFs.

8.5.3 90% of the analytes must be recovered at 60 to 140 percent accuracy or the source of the

8.9.4 The instrument blanks can be analyzed beyond the twelve-hour tune time period.

8.9.5 Instrument blanks do not need to meet the surrogate recovery criteria listed in Section 8.11.

8.9.6 Instrument blanks must meet the internal standard criteria listed in Section 8.10.

8.10 Internal standard recovery.

8.10.1 The internal standard recovery, determined by total area, for all standards, blanks, samples, and spikes shall be checked immediately after analysis in order to determine if all applicable criteria have been met.

8.10.2 If the total area of any internal standard in any blank, sample, or spike analysis changes by more than a factor of two (-50% to +100%) of the corresponding internal standard from the preceding 12-hour calibration standard, the system must be checked for malfunctions and the necessary corrections must be made. After the corrections are made, the analyses performed while the system was malfunctioning must be repeated. Keep in mind that many "corrections" to the system will require that the initial calibration be performed prior to reanalysis of the samples.

8.10.3 If after reanalysis, the total area for all internal standards are within the criteria, then the problem is considered to have been within the laboratory's control. The data form the reanalysis must be used for calculating sample results.

8.10.4 If reanalysis of the sample does not solve the problem, submit the data for both analyses. Distinguish between the analysis and reanalysis by adding an "RE" suffix to the EPA sample number on the reanalysis. The problem must be documented in the Report Narrative (see Section 10.2.1.9).

8.10.5 The internal standard retention times in all standards must be checked immediately after data acquisition. If the retention time for any internal standard changes by more than 0.25 minutes from the latest daily calibration standard, the system must be inspected for malfunctions, and the necessary corrections made. Blanks, samples, and spikes analyzed within the 12-hour analytical period of the initial calibration shall be compared to the 50 μg/L standard, or the 5 μg/L standard for low detection limit waters.

8.11 System monitoring compound recovery.

8.11.1 The system monitoring compound (SMC) recovery in all blanks, samples, and spike must be calculated and checked immediately after analysis and compared to the following criteria.

Compound	Water % Recovery	Soil % Recovery

1,2-Dichloroethane-d4	76 - 114	70 - 121
Toluene-d8	88 - 110	84 - 138
Bromofluorobenzene	86 - 115	59 - 113

%R = (Amount Found/Amount Spiked)*100

8.11.2 If the recovery of one or more of the system monitoring compounds is not within the limits, the following steps must be taken.

8.11.2.1 Check to ensure that there are no calculation errors, and check the system performance.

8.11.2.2 Reanalyze the sample if a system performance problem or calculation error is not evident.

8.11.2.3 Do not reanalyze undiluted samples with SMC recoveries outside the limits if the diluted analysis with acceptable SMC recoveries is being submitted. Report the event in the runlog and report narrative.

8.11.2.4 Do not reanalyze the matrix spike or matrix spike duplicate samples, even if the SMC recoveries are outside the limits.

8.11.2.5 If the sample associated with the matrix spike and duplicate analyses does not meet the SMC recovery criteria, it should be reanalyzed only if the matrix spike and duplicate SMC recoveries are within the limits. If the sample and spikes show the same pattern (i.e., outside the limits), then the sample does not need reanalysis. The similarity in SMC recoveries in the sample and spike analyses must be discussed in the Report Narrative (See Section 10.2.1.9.).

8.11.3 If the SMC recoveries of the reanalysis are within limits, then the problem was within the laboratory's control. Therefore, the analysis with the SMC recoveries within limits shall be considered the initial analysis.

8.11.4 If the reanalysis does not solve the problem, then submit the data from both analyses. Distinguish between the original analysis and the reanalysis by adding the "RE" suffix to the EPA sample number in the reanalysis.

8.11.5 If the SMC recovery for a medium level soil analysis is outside the limits, then reanalysis of the extract shall be done first. If the SMC recovery continues to be outside the limits, then the sample shall be re-extracted and analyzed. Submit data according to Sections 8.11.3 and 8.11.4.

8.12 Matrix spike and matrix spike duplicate analysis.

8.12.1 In order to determine the matrix effect upon the analytical methodology, a matrix spike and matrix spike duplicate analysis must be performed according to the following scheme, whichever is most frequent:

One MS/MSD for each case of samples received.

One MS/MSD for each SDG within a case.

One MS/MSD each 14 calendar day period during which field samples in a case are received, beginning with the receipt of the first sample in the sample delivery group (SDG).

Matrix QC samples are usually designated in the field. In the event that a sample was not designated as the matrix spike sample and adequate sample volume exists, the analyst will choose one representative sample from the SDG for QC analysis. The analyst shall not designate any obvious field blanks as the QC sample.

8.12.2 Matrix spike and matrix spike duplicate samples shall be analyzed immediately following the analysis of the sample designated as the matrix spike sample.

8.12.3 Analyze the MS and MSD according to Section 9 of this SOP.

8.12.4 The recovery and RPD criteria for matrix spike and matrix spike duplicate analyses are as follows:

Compound	Water % Recovery	Soil % Recovery	Water RPD	Soil RPD
1,1-Dichloroethene	61 - 145	59 - 172	14	22
Benzene	76 - 127	66 - 142	11	21
Trichloroethene	71 - 120	62 - 137	14	24
Toluene	76 - 125	59 - 139	13	21
Chlorobenzene	75 - 130	60 - 133	13	21
1,2-Dibromoethane	75 - 125	50 - 150	30	50
1,2-dibromo-2-chloropropane	75 - 125	50 - 150	30	50
1,3-Dichloropropane	75 - 125	50 - 150	30	50
1,2,3-Trichloropropane	75 - 125	50 - 150	30	50

8.12.5 Calculate the recovery of each compound as follows:

% Rec = ((SSR - SR)/SA)*100

where,

SSR = Spiked sample result
SR = Sample result
SA = Spike added

8.12.6 Calculate the relative percent differences (RPD) of the recoveries of each compound in the matrix spike and matrix spike duplicate as follows:

$$RPD = \frac{|MSR - MSDR|}{(½)(MSR + MSDR)} \times (100)$$

where,

MSR = Matrix spike recovery
MSDR = Matrix spike duplicate recovery

8.12.7 The limits for matrix spike and matrix spike duplicate recovery are advisory limits only. If the limits are not met, then no further action is required since the purpose of these analyses is to determine matrix effects on compound recovery. A comment regarding the matrix spike recoveries must be included in the report narrative. However, frequent failure to meet the recovery or RPD criteria should alert the analyst that a problem may exist, and must be investigated. The analyst should check the matrix spike solution by spiking a method blank sample and checking the recoveries of the spike compounds. A new solution should be prepared if the recoveries are outside the limits.

8.13 Sample dilution.

8.13.1 If the on-column concentration of any target compound in any sample exceeds the initial calibration range, a new aliquot of that sample must be diluted and purged. The following criteria shall be used in performing dilutions.

8.13.1.1 Use the results of the original analysis to determine the approximate dilution factor required to get the largest analyte peak within the initial calibration range.

8.13.1.2 The dilution factor chosen should keep the response of the largest analyte peak for a target compound in the upper half of the initial calibration range of the instrument.

8.13.1.3 Do not dilute matrix spike or matrix spike duplicate samples to get either the spiked or non- spiked target compounds within the initial calibration range. If the sample from which the spike aliquots were taken contains high levels of

the spiked analytes, calculate the concentration and recovery of the analytes from the undiluted analysis, and note the problem in the report narrative.

8.13.1.4 In the case of extremely contaminated samples several dilutions may be required.

8.13.2 After a sample is analyzed that contains one or more target compounds at a level exceeding the initial calibration range of the system, it must be demonstrated that there is no carryover to subsequent analyses. The laboratory must:

8.13.2.1 Analyze an instrument blank immediately after the contaminated sample. If the autosampler was used, the instrument blank must be analyzed using the same sparge cell as the contaminated sample. The instrument blank must meet the acceptance criteria in Section 8.10.

8.13.2.2 Monitor the sample analyzed immediately after the contaminated sample for all compounds that were in the contaminated sample that exceeded the limits above. The maximum contamination criteria are as follows: the sample must not contain a concentration above the QL for the target compounds that exceeded the limits in the contaminated sample. If the autosampler is used, the next sample analyzed using the same sparge cell that was used for the contaminated sample must also meet the maximum contamination criteria.

8.14 Review of Target Analytes

Each reported value must be reviewed for both qualitative and quantitative validity. This process, in particular the qualitative review of mass spectra, relies upon the technical judgement of the analyst.

8.14.1 Qualitative Review

In order for a target compound to be identified as present in a sample both the relative retention time and the mass spectra of the peak must match those of the standard.

8.14.1.1 For relative retention time, the peak must elute within 0.06 relative retention time units of the analyte in the continuing calibration standard. The relative retention time is the retention time of the target divided by the retention time of the associated internal standard. If the relative retention time for the target analyte in the CCAL is 0.82 then the peak in the sample must have a relative retention time of 0.76 to 0.88.

8.14.1.2 The mass spectra used for qualitative identification must be obtained using the GCMS system used to analyze the samples.

8.14.1.2.1 All ions present in the standard mass spectra at a relative intensity of 10 percent of the most abundant ion must be present in the sample spectra.

8.14.1.2.2 The relative intensities of the ions must agree within ±20 % between the standard and sample spectra.

8.14.1.2.3 Ions present in the sample at greater than 10 percent abundance but not present in the standard spectra must be reviewed and accounted for by the analyst making the comparison.

8.14.1.3 If a compound cannot be verified by these criteria but, in the technical judgement of the analyst, is present the supporting evidence must be indicated on the raw data and the analyte reported.

8.14.2 Quantitative Review

Reported values must be reviewed to determine that the correct calculations were used to generate the results, that the RRFs from the associated continuing calibration standard were used, and that all other numbers are accurate.

8.14.2.1 Review of data system integrations

The analyst must review the data system integration to verify that the internal standards, surrogates and target compounds are integrated properly. In the event that the analyst observes an incorrect integration the analyst must manually correct the integration and document the correction as per Region 9 Lab SOP 835.

8.14.2.2 Water calculations

Results for target analytes are calculated using the following equation:

$$\text{Conc. } (\mu g/L) = A_x * AMT_{IS} * DF / (A_{IS} * RRF)$$

where:
A_x = area of the characteristic ion of the compound
AMT_{IS} = amount of internal standard in μg/L (5 μg/L for low level waters and 50 μg/L for medium level)
DF = dilution factor
A_{IS} = area of the characteristic ion of the associated internal standard
RRF = analyte's relative response factor from the daily calibration

8.14.2.3 Low level soil calculations

Results for target analytes are calculated using the following equation:

$$\text{Conc. } (\mu g/Kg) = A_x * AMT_{IS} / (A_{IS} * RRF * W * D)$$

where:
A_x = area of the characteristic ion of the compound

AMT_{IS} = amount of internal standard in (250 ng)
D = dry weight factor ((100 - %Moisture)/100)
W = weight of sample in grams
A_{IS} = area of the characteristic ion of the associated internal standard
RRF = analyte's relative response factor from the daily calibration

8.14.2.4 Medium level soil calculations

Results for target analytes are calculated using the following equation:

$$\text{Conc. } (\mu g/Kg) = A_x * AMT_{IS} * Vt * 1000(\mu L/mL) * DF/(A_{IS} * RRF * Va * W * D)$$

where:
A_x = area of the characteristic ion of the compound
AMT_{IS} = amount of internal standard in ng (250 ng)
D = dry weight factor ((100 - %Moisture)/100)
W = weight of sample extracted in grams
A_{IS} = area of the characteristic ion of the associated internal standard
RRF = analyte's relative response factor from the daily calibration
Vt = Total volume of the extract in mL
Va = Volume of aliquot of extract purged, in μL
DF = Dilution factor for medium level soils is defined as:

$$\frac{\text{volume of extract use + volume of clean solvent}}{\text{volume of extract used}}$$

8.15 Review the Tentatively Identified Compound search results for the following:

8.15.1 Verify that all unknown peaks in the RIC greater than 10 percent of the area of the nearest internal standard are accounted for in the summary.

8.15.2 Relative intensities of the major ions in the NIST reference spectrum (ions greater than 10 percent of the most abundant ion) should be present in the sample spectrum.

8.15.3 The relative intensities of the major ions should agree within 20 percent.

8.15.4 Molecular ions present in the reference spectrum should be present in the sample spectrum.

8.15.5 Ions present in the sample spectrum but not in the reference spectrum shall be reviewed for possible background contamination or the presence of co-eluting compounds.

8.15.6 Ions present in the reference spectrum but not within the scan range (35 to 300 amu) of the method should not be considered when making a tentative identification.

8.15.7 If, in the technical judgement of the analyst, no valid tentative identification of the compound can be made, the compound should be reported as "Unknown". The analyst shall attempt classification of the unknown compound (i.e., unknown hydrocarbon, unknown aromatic,

unknown chlorinated compound, etc.). The probable molecular weight should be included, if distinguishable.

9 ANALYTICAL PROCEDURES

9.1 Analytical system preparation.

Mass calibration of the analytical system shall be performed according to the schedule prescribe in Section 8.1. Mass calibration is performed to ensure the accurate assignment of masses to ions generated in the ion volume of the mass spectrometer. Perfluorotributylamine (FC43) is the compound which shall be used to perform the mass calibration of the instrument.

9.1.1 Enter the control program of the instrument and enable the analyzer voltages.

9.1.2 Enter the tuning program of the instrument. Turn the filament and electron multiplier on and enable the scan function.

9.1.3 Open the calibration gas valve and allow the FC43 to infuse into the analyzer.

9.1.4 Adjust the voltages according to the manufacturer's instruction manual and specifications to obtain the proper mass ratio, peak shape, and isotope peak resolution.

9.1.5 Calibrate the mass spectrometer as specified in the manufacturer's instruction manual.

9.1.6 The data system will automatically acquire a FC43 spectrum, process the FC43 spectrum data, and calibrate the mass spectrometer.

Check the mass spectrum/peak ratios with the specifications listed in Section 8.1. The specifications shall be met or the instrument must be re-tuned and recalibrated.

9.2 Leak Checking

The mass spectrometer shall be checked for leaks after system maintenance, prior to the analysis of 4-bromofluorobenzene (BFB) tuning compound.

9.2.1 Enter the control program and check that the analyzer temperatures are set to the following values:

9.2.1.1 Transfer line body @ 250°C.

9.2.1.2 Transfer line nozzle @ 250°C.

9.2.1.3 Ion source @ 180°C.

9.2.1.4 If the display indicates that the analyzer temperatures are not at the desired set points, corrective action must be performed according to the operator's manual.

9.2.2 Check the analyzer fore pressure and the Separator/Source pressures.

9.2.2.1 The analyzer fore pressures should be less than 0.050 psi.

9.2.2.2 The Separator/Source pressure should be less than 0.50 psi (Incos-XL and HP5973s do not use the separator.)

9.2.2.3 Values higher than indicated above are indicative of large leaks and must be corrected.

9.2.3 Check the nitrogen (m/z 28) to water (m/z 18) ratio

9.2.3.1 Set the mass spectrometer to scan over a range of 10 to 50 m/z. Observe the ratio of the water peak (m/z 18) to the nitrogen peak (m/z 28). If a leak is present in the mass spectrometer the nitrogen peak will be greater than the water peak. Corrective action must be taken if a leak is detected.

9.3 GC/MS Performance Check

9.3.1 Prior to the analysis of any calibration standards, blanks, or samples (including MS/MSDs), the GC/MS system must meet the mass spectral ion abundance criteria for bromofluorobenzene (BFB) prescribed in Section 8.2. Proper tuning of the instrument is necessary to produce standardized fragmentation patterns of target and non-target compounds.

9.3.2 Setup the GC/MS system with the appropriate GC and mass spectrometer conditions. See Attachment D.

9.3.3 Set up a data acquisition for the direct injection of BFB.

9.3.4 Inject 1 μL of BFB Solution (50 ng/μL) into injection port and press the start button on the GC.

9.3.5 After the data acquisition is complete, execute the BFB tune procedure. The procedure will automatically find the BFB peak, average three scans (the peak apex scan and the scans immediately preceding and following the apex), perform a background subtraction and print out a hard copy of the spectrum, the chromatogram, and the table of ion abundances.

9.3.6 The ion abundance ratios must meet the criteria listed in Section 8.2

9.4 Analysis of waters (5 mL sample volume).

The target compounds for this method are found in Attachment A.

9.4.1 Five-point initial calibration

A five-point initial calibration is performed in order to demonstrate that the GC/MS system provides a linear response over the desired concentration range. The purge and trap concentrator shall be set up for analysis using 5-mL sparge cells. This calibration may also be used for the analysis of medium level soil extracts. The five concentration points are listed in the Appendix A

9.4.1.1 Analysis on Incos-50A, and Incos-XL systems.

9.4.1.1.1 Fill a 5-mL syringe with method blank water. Invert the syringe, remove any air bubbles, and bring the level to 5 mL by displacement with the plunger.

9.4.1.1.2 Lay the syringe on the lab bench in the hood and spike the water with 5 μL of IS/Surr Solution. The amount used results in the analytical equivalent of 50 μg/L.

9.4.1.1.3 Spike the water with the appropriate amount of RAP Calibration Mix for the specific point being analyzed.

9.4.1.1.4 Attach the syringe to the luer lock mount on the autosampler. Open the mount valve and inject the contents of the syringe into the sparge cell and close the valve. Remove the syringe from the mount.

9.4.1.2 Analysis on HP5973H & HP5973J system.

9.4.1.2.1 The five concentration points are listed in Appendix A. Standards are prepared in 50-mL gas tight syringe and then transferred to 40mL VOA vials which are pre-cleaned.

9.4.1.2.2 Fill a 50-mL gas-tight syringe with method blank water. Invert the syringe, remove any air bubbles, and bring the level to 50-mL by displacement with the plunger.

9.4.1.2.3 Spike the water with the appropriate amount of RAS Calibration Mix for the specific point being analyzed.

9.4.1.2.4 Cap the end of the syringe. Rotate and invert the closed syringe to mix. Let the standard solution equilibrate in the syringe for about 1 minutes. While the standard solution is equilibrating, label the 40-mL vial with information about the standard.

9.4.1.2.5 Gently decant the standard solution into the 40-mL vial, down the side of the vial, without any agitation. Overfill the vial to form an inverted meniscus. Cap the vial. Invert the vial to ensure that there are no air bubbles present.

9.4.1.2.6 Gently place the vial in the appropriate autosampler position. Avoid causing any hairline cracks in the vial, as this may result in the vial disintegrating in the autosampler.

9.4.1.2.7 Analyze the standards. The autosampler will analyze a 25 mL aliquot and add 1 μL of the 250 ng/μL IS/SMC solution.

9.4.1.3 Press the start button on the concentrator to begin purging the sample. The purge and trap concentrator parameters are found in Attachment B.

9.4.1.4 Setup the GC/MS system with the appropriate GC and mass spectrometer conditions. See Attachment D.

9.4.1.5 Analyze the standard and acquire the data.

9.4.1.6 Quantitate the data and print out a quantitation report and chromatogram.

9.4.1.7 Analyze the four other initial calibration standards following the procedures outlined above.

9.4.1.8 Update the initial calibration response factors in the method by associating the correct data file with each calibration level. Save the method.

9.4.1.9 Generate the initial calibration summary report. Samples shall not be analyzed if the initial calibration does not meet the criteria specified in Appendix A of this SOP.

9.4.1.10 If the initial calibration meets all the criteria specified in Section 8.3 of this SOP, the remainder of the 12-hour analytical period may be used for the analysis of LCS, blanks and samples, using the 50 μg/L calibration standard to quantitate the blank and sample data files.

9.4.2 Continuing calibration

A continuing calibration standard shall be run once every 12-hour analytical time period, after BFB tuning and prior to a method blank analysis. The continuing calibration check is performed in order to determine if the GC/MS system is operating within the acceptable range as demonstrated by the percent difference and the minimum response factor criteria meeting the appropriate QA/QC criteria. The continuing calibration is analyzed at a level of 50 μg/L.

9.4.2.1 Prepare and load a 50 μg/L calibration standard as described in Section 9.4.1. and Appendix A.

9.4.2.2 Press the start button on the concentrator to begin purging the standard.

9.4.2.3 Setup the GC/MS system with the appropriate GC and mass spectrometer conditions. See Attachment D.

9.4.2.4 Analyze the standard and acquire the data.

9.4.2.5 Quantitate the data and print out a quantitation report and chromatogram.

9.4.2.6 Update the response factors for each analyte in the method and save the new response factors.

9.4.2.7 Generate the continuing calibration summary report. Samples shall not be analyzed if the continuing calibration does not meet the criteria specified in Section 8.4 of this SOP.

9.4.2.8 If the continuing calibration meets all the criteria specified in Section 8.4, the remainder of the 12-hour analytical period may be used for the analysis of blanks and samples, using the RRFs from the daily 50 µg/L continuing calibration file to quantitate the blank and sample data files.

9.4.3 Laboratory Control Standard (LCS)

A LCS is analyzed once every 12-hour analytical time period, immediately after the initial or continuing calibration. An LCS is analyzed to demonstrate that the calibration standards used to calibrate the instrument are appropriate. Specifically the LCS verifies that the standards include the appropriate compounds at the correct concentration. This is done by preparing the LCS spiking mixture from a source (or sources) entirely separate from those used to calibrate the instrument. The LCS is analyzed at a level of 50 µg/L.

9.4.3.1 Analysis on Incos-50A, and Incos-XL systems

9.4.3.1.1 Fill a 5-mL syringe with method blank water. Invert the syringe, remove any air bubbles, and bring the level to 5 mL by displacement with the plunger.

9.4.3.1.2 Lay the syringe on the lab bench in the hood and spike the water with 5 µL of IS/Surr Solution. The amount used results in final concentration 50 µg/L.

9.4.3.1.3 Spike the water with 5 µL of RAS LCS Spike Solution, (50 ng/µL). The amount used results in final concentration 50 µg/L.

9.4.3.1.4 Attach the syringe to the luer lock mount on the autosampler. Open the mount valve and inject the contents of the syringe into the sparge cell and close the valve. Remove the syringe from the mount

9.4.3.2 Analysis on HP5973H & HP5973J system.

9.4.3.2.1 The LCS is prepared in 50-mL gas tight syringe and then transferred to 40mL VOA vials which is pre-cleaned.

9.4.3.2.2 Fill a 50-mL gas-tight syringe with method blank water. Invert the syringe, remove any air bubbles, and bring the level to 50-mL by displacement with the plunger.

9.4.3.2.3 Spike the water with 50 μL of RAS LCS Spike Solution, (50 ng/μL). The amount used results in final concentration 50 μg/L.

9.4.3.2.4 Cap the end of the syringe. Rotate and invert the closed syringe to mix. Let the standard solution equilibrate in the syringe for about 1 minutes. While the standard solution is equilibrating, label the 40-mL vial with information about the standard.

9.4.3.2.5 Gently decant the standard solution into the 40-mL vial, down the side of the vial, without any agitation. Overfill the vial to form an inverted meniscus. Cap the vial. Invert the vial to ensure that there are no air bubbles present.

9.4.3.2.6 Gently place the vial in the appropriate autosampler position. Avoid causing any hairline cracks in the vial, as this may result in the vial disintegrating in the autosampler.

9.4.3.2.7 Analyze the standards. The autosampler will analyze a 25 mL aliquot and add 1 μL of the 250 ng/μL IS/SMC solution.

9.4.3.3 Press the start button on the concentrator to begin purging the standard.

9.4.3.4 Setup the GC/MS system with the appropriate GC and mass spectrometer conditions. See Attachment D.

9.4.3.5 Analyze the standard and acquire the data.

9.4.3.6 Quantitate the data and print out a quantitation report and chromatogram.

9.4.3.7 Evaluate the calculated concentrations against the criteria listed in Section 8.5.3. Samples shall not be analyzed if the LCS does not meet the criteria specified in Section 8.5.3.

9.4.3.8 If the LCS meets all the criteria specified in Section 8.5.3, the remainder of the 12-hour analytical period may be used for the analysis of blanks and samples.

9.4.4 Quantitation Limit Standard

A low level quantitation standard at the concentration of the lowest point of the initial calibration must be analyzed immediately after the LCS for each 12-hour analytical period. In the event that an initial calibration is analyzed the lowest standard of the initial calibration satisfies this requirement

9.4.4.1 Prepare and load the quantitation limit standard (10μg/L) as described in Section 9.4.1 and Appendix A.

9.4.4.2 Press the start button on the concentrator to begin purging the standard.

9.4.4.3 Setup the GC/MS system with the appropriate GC and mass spectrometer conditions. See Attachment D.

9.4.4.4 Analyze the standard and acquire the data.

9.4.4.5 Quantitate the data and print out a quantitation report and chromatogram.

9.4.4.6 Evaluate the calculated concentrations against the criteria listed in Section 8.6.3. Samples shall not be analyzed if the QL standard does not meet the criteria specified in Section 8.6.3.

9.4.4.7 If the QL standard meets all the criteria specified in Section 8.6.3, the remainder of the 12-hour analytical period may be used for the analysis of blanks and samples.

9.4.5 Method blank analysis.

After the initial or continuing calibration is performed and before samples are analyzed, a method, or laboratory blank analysis shall be conducted.

9.4.5.1 Analysis on Incos-50A, and Incos-XL systems

9.4.5.1.1 Fill a 5-mL syringe with method blank water. Invert the syringe, remove any air bubbles, and bring the level to 5 mL by displacement with the plunger.

9.4.5.1.2 Lay the syringe on the lab bench in the hood and spike the water with 5 μL of IS/Surr Solution. The amount used results in final concentration 50 μg/L.

9.4.5.1.3 Attach the syringe to the luer lock mount on the autosampler. Open the mount valve and inject the contents of the syringe into the sparge cell and close the valve. Remove the syringe from the mount

9.4.5.2 Analysis on HP5973H & HP5973J system.

9.4.5.2.1 Gently fill a 40-mL vial with method blank water. Overfill the vial to

form an inverted meniscus. Cap the vial. Invert the vial to ensure that there are no air bubbles present.

9.4.5.2.2 Gently place the vial in the appropriate autosampler position. Avoid causing any hairline cracks in the vial, as this may result in the vial disintegrating in the autosampler.

9.4.5.2.3 Analyze the method blank. The autosampler will analyze a 5 mL aliquot and add 1 μL of the 250 ng/μL IS/SMC solution.

9.4.5.3 Press the start button on the concentrator to begin purging the sample.

9.4.5.4 Setup the GC/MS system with the appropriate GC and mass spectrometer conditions. See Attachment D.

9.4.5.5 Analyze the method blank and acquire the data.

9.4.5.6 Quantitate the data and print out a quantitation report and chromatogram.

9.4.5.6.1 Review the results as discussed in Section 8.14 for qualitative identification of target analytes. Review all target compounds that are detected to verify they are integrated properly. Review the chromatogram for possible false negatives.

9.4.5.6.2 Print out the updated quantitation report.

9.4.5.6.3 Samples shall not be analyzed if the method blank does not meet the criteria specified in Section 8.7 of this SOP.

9.4.5.6.4 If the method blank meets all the specified criteria, the remainder of the 12-hour analytical period may be used for the analysis of samples.

9.4.6 Sample analysis.

Samples shall be analyzed only after the BFB tune, initial calibration, continuing calibration, and method blank analyses meet all of the appropriate criteria specified in Section 8 of this SOP. If time still remains in the 12-hour time period after meeting the initial calibration criteria, samples may be analyzed. It is not necessary to analyze a continuing calibration standard within this 12-hour time period, if the initial calibration standard that is at the same concentration as the continuing calibration standard meets the continuing calibration acceptance criteria.

9.4.6.1 Allow the sample to reach ambient temperature before analysis.

9.4.6.2 The analyst shall again check that the numbers on the vials coincide with the numbers

on the routing forms to ensure that the correct sample is being analyzed.

9.4.6.3 Break the chain of custody seal on the vial with a scalpel or other appropriate implement, again making note in the runlog if the seal is missing or compromised in any way.

9.4.6.4 The analyst shall take note if the sample has an unusual color or other physical characteristic such as more than one phase, presence of a precipitate or unusual viscosity. If any physical signs of contamination are present a screening analysis to protect the analytical system from damage or contamination, and to determine the appropriate subsequent dilution is required. If a screening is necessary, it shall be at a 1:50 dilution, unless the laboratory supervisor decides otherwise.

9.4.6.5 The analyst shall also note if there is head space present in the sealed sample vial.

9.4.6.6 Analysis on Incos-50A, and Incos-XL systems

9.4.6.6.1 Fill a 5-mL syringe with the sample. Invert the syringe, remove any air bubbles, and bring the level to 5-mL by displacement with the plunger. Any excess sample displaced from the syringe should be placed in the aqueous waste containers.

9.4.6.6.2 Lay the syringe on the lab bench in the hood and spike the sample with 5 μL of IS/Surr Solution. The amount used results in final concentration 50 μg/L.

9.4.6.6.3 Attach the syringe to the luer lock mount on the purge and trap concentrator. Open the mount valve and inject the contents of the syringe into the sparge cell and close the valve. Remove the syringe from the mount.

9.4.6.7 Analysis on HP5973H and HP5973J system.

9.4.6.7.1 Gently place the sample vial in the appropriate autosampler position Avoid causing any hairline cracks in the vial, as this may result in the vial disintegrating in the autosampler.

9.4.6.7.2 The autosampler will analyze a 5 mL aliquot and add 1 μL of the 250 ng/μL IS/SMC solution.

9.4.6.8 Press the start button on the concentrator to begin purging the sample.

9.4.6.9 The analyst shall observe the initial purging of the sample to determine if the sample is liable to foam during the purging process. If the sample does foam, it can be analyzed as long as the foam does not enter the sparge vessel neck and enter the transfer line leading to the trap. If the analyst feels that the sample is going to foam

excessively, the purging shall be discontinued by pressing the "step to standby" button twice. The sparge cell shall be drained, rinsed with method blank water, and drained again. The sample waste and rinstate must be placed in the aqueous waste container. The trap and the GC shall be baked out for 6 minutes before additional samples are analyzed. A 1:10 dilution of the sample, or other appropriate dilution to prevent foaming, shall be analyzed, even though the detection limits are elevated. A NOTE must be made in the runlog regarding sample foaming.

9.4.6.10 Check the pH of the sample using pH 0-14 range pH paper. Record the pH in the injection logbook. If any samples have a pH greater than 2 this needs to be noted in the report narrative.

9.4.6.11 Setup the GC/MS system with the appropriate GC and mass spectrometer conditions. See Attachment D.

9.4.6.12 Set up a data acquisition. The sample description shall include the EPA sample number and the laboratory sample number. Additional header information shall include the sample volume or weight, GC and scan descriptors, instrument ID, and the analyst's initials.

9.4.6.13 Quantitate the data and print out a quantitation report and chromatogram.

9.4.6.14 Review the results as discussed in Section 8.14 for qualitative identification of target analytes. Delete all reported hits which do not meet the qualitative criteria. Review all target compounds that are detected to verify they are integrated properly. Review the chromatogram for possible false negatives.

9.4.6.15 Print out the updated quantitation report.

9.4.6.16 Check the sample's surrogate and internal standard recoveries with the criteria in the QA/QC Section of this SOP.

9.4.6.17 In addition to the full strength analysis, the sample must be diluted and reanalyzed if any of the target analytes exceed the calibration range of the instrument. The sample should be diluted so that the target compound(s) which was originally outside of the calibration range, will fall within the upper half of the initial calibration range of the instrument.

9.4.7 Analysis of matrix spike and matrix spike duplicate samples.

A matrix spike and matrix spike duplicate analysis must be performed in order to determine matrix effects, if any, on the sample analysis.

9.4.7.1 Matrix spike and matrix spike duplicate analyses shall be performed according to the schedule specified in Section 8.12 of this SOP

9.4.7.2 For the Incos-50A and Incos-XL systems, matrix spike and matrix spike duplicate samples shall be analyzed according to the instructions for sample analysis (Section 9.4.6), except that the sample shall be spiked with 5 uL of Matrix Spike Solution, after spiking the sample with the IS/SMC Solution.

9.4.7.3 For the HP5973 systems, MS/MSD samples shall be analyzed according to the instructions for sample analysis (Section 9.4.6), except that the sample shall be spiked with 40μL of the 50 ng/μL MS solution. Using a microliter syringe, inject the MS solution directly into the sample, through the teflon-lined septum of the 40-mL screw cap vial. Assuming the vial contains 40 mL of sample, the final spike concentration is 50μg/L.

9.4.8 Analysis of storage blank samples.

9.4.8.1 A storage blank analysis must be performed according to the schedule specified in Section 8.8 of this SOP.

9.4.8.2 Storage blank samples shall be analyzed according to the instructions for sample analysis, Section 9.4.6 of this SOP.

9.5 Analysis of low detection limit waters (25 mL)

The 12-hour analytical time period for this method begins with the injection of BFB and ends 12 hours after the injection time. Standards, blanks, and samples shall be analyzed within this 12-hour analytical time period.

9.5.1 Five point initial calibration.

The purge and trap concentrator shall be set up for analysis using 25-mL sparge cells.

9.5.1.1 Analysis on Incos-50A and Incos-XL systems.

9.5.1.1.1 The five concentration points are listed in Appendix B.

9.5.1.1.2 Fill a 25-mL syringe with method blank water. Invert the syringe, remove any air bubbles, and bring the level to 25 mL by displacement with the plunger.

9.5.1.1.3 Spike the water with 2.5 μL of IS/SMC Solution. The amount used results in a final concentration of 5 μg/L.

9.5.1.1.4 Spike the water with the appropriate amount of RAP Calibration Mix for the specific point being analyzed.

9.5.1.1.5 Attach the syringe to the luer lock mount on the autosampler. Open the mount valve and inject the contents of the syringe into the sparge cell and close the valve. Remove the syringe from the mount.

9.5.1.2 Analysis on HP5973H & HP5973J system.

9.5.1.2.1 The five concentration points are listed in Appendix B. Standards are prepared in 50-mL gas tight syringe and then transferred to 40mL VOA vials which are pre-cleaned.

9.5.1.2.2 Fill a 50-mL gas-tight syringe with method blank water. Invert the syringe, remove any air bubbles, and bring the level to 50 mL by displacement with the plunger.

9.5.1.2.3 Spike the water with the appropriate amount of RAP Calibration Mix for the specific point being analyzed.

9.5.1.2.4 Cap the end of the syringe. Rotate and invert the closed syringe to mix. Let the standard solution equilibrate in the syringe for about 1 minutes. While the standard solution is equilibrating, label the 40-mL vial with information about the standard.

9.5.1.2.5 Gently decant the standard solution into the 40-mL vial, down the side of the vial, without any agitation. Overfill the vial to form an inverted meniscus. Cap the vial. Invert the vial to ensure that there are no air bubbles present.

9.5.1.2.6 Gently place the vial in the appropriate autosampler position. Avoid causing any hairline cracks in the vial, as this may result in the vial disintegrating in the autosampler.

9.5.1.2.7 Analyze the standards. The autosampler will analyze a 25 mL aliquot and add 1 μL of the 125 ng/μL IS/SMC solution.

9.5.1.3 Follow the instructions for the 5-mL five-point initial calibration analysis in Sections 9.4.1.3 through 9.4.1.9 for each of the five calibration levels.

9.5.1.4 Update the initial calibration response factors for each the method by associating the current data file with each calibration level. Save the method.

9.5.1.5 Generate the initial calibration summary report. Samples shall not be analyzed if the initial calibration does not meet the criteria specified in Appendix B.

9.5.1.6 If the initial calibration meets all the criteria specified in Section 8.3 of this SOP, the remainder of the 12-hour analytical period may be used for the analysis of QL standard (0.5 μg/L), LCS, blanks and samples, using the 5 μg/L calibration standard to quantitate the blank and sample data files.

9.5.2 Continuing calibration.

A continuing calibration standard shall be run every 12-hour analytical time period, after BFB

tuning and prior to a method blank analysis. The continuing calibration check is performed in order to determine if the percent difference and the minimum response factor criteria meet the appropriate QA/QC criteria. The continuing calibration is analyzed at a level of 5 µg/L.

9.5.2.1 Prepare the mid-level standard as described in Sections 9.5.1.1 for the Incos-50A, and Incos-XL systems and 9.5.1.2 for the HP5973H, and HP5973J systems. The amounts used result in a final concentration of 5 µg/L.

9.5.2.2 Follow the instructions for the 5-mL continuing calibration analysis in Section 9.4.2.2 to 9.4.2.5 of this SOP.

9.5.2.3 Update the response factors for the continuing calibration and generate the continuing calibration summary form.

9.5.2.4 The continuing calibration must meet all the criteria specified in Section 8.4 of this SOP.

9.5.3 Laboratory Control Standard (LCS)

A LCS is analyzed once every 12-hour analytical time period, immediately after the initial or continuing calibration. An LCS is analyzed to demonstrate that the calibration standards used to calibrate the instrument are appropriate. Specifically the LCS verifies that the standards include the appropriate compounds at the correct concentration. This is done by preparing the LCS spiking mixture from a source (or sources) entirely separate from those used to calibrate the instrument. The LCS is analyzed at a level of 5 µg/L.

9.5.3.1 Analysis on Incos-50A, and Incos-XL systems

9.5.3.1.1 Fill a 25-mL syringe with method blank water. Invert the syringe, remove any air bubbles, and bring the level to 25 mL by displacement with the plunger.

9.5.3.1.2 Lay the syringe on the lab bench in the hood and spike the water with 2.5 µL of IS/Surr Solution. The amount used results in final concentration 5 µg/L.

9.5.3.1.3 Spike the water with 5 µL of the Low level Laboratory Control Sample Spike Solution (LCS Spike Solution, 25/250 ng/µL). The amount used results in final concentration 5/50/L.

9.5.3.1.4 Attach the syringe to the luer lock mount on the autosampler. Open the mount valve and inject the contents of the syringe into the sparge cell and close the valve. Remove the syringe from the mount

9.5.3.2 Analysis on HP5973H & HP5973J system.

9.5.3.2.1 The LCS is prepared in 50-mL gas tight syringe and then transferred

to 40-mL VOA vial which is pre-cleaned.

9.5.3.2.2 Fill a 50-mL gas-tight syringe with method blank water. Invert the syringe, remove any air bubbles, and bring the level to 50 mL by displacement with the plunger.

9.5.3.2.3 Spike the water with 50 μL of the Low level Laboratory Control Sample Spike Solution (LCS Spike Solution, 25/250 ng/μL). The amount used results in final concentration 5/50 μg/L.

9.5.3.2.4 Cap the end of the syringe. Rotate and invert the closed syringe to mix. Let the standard solution equilibrate in the syringe for about 1 minutes. While the standard solution is equilibrating, label the 40-mL vial with information about the standard.

9.5.3.2.5 Gently decant the standard solution into the 40-mL vial, down the side of the vial, without any agitation. Overfill the vial to form an inverted meniscus. Cap the vial. Invert the vial to ensure that there are no air bubbles present.

9.5.3.2.6 Gently place the vial in the appropriate autosampler position. Avoid causing any hairline cracks in the vial, as this may result in the vial disintegrating in the autosampler.

9.5.3.2.7 The autosampler will analyze a 25 mL aliquot and add 1 μL of the 125 ng/μL IS/SMC solution.

9.5.3.3 Press the start button on the concentrator to begin purging the standard.

9.5.3.4 Setup the GC/MS system with the appropriate GC and mass spectrometer conditions. See Attachment D.

9.5.3.5 Analyze the standard and acquire the data.

9.5.3.6 Quantitate the data and print out a quantitation report and chromatogram.

9.5.3.7 Evaluate the calculated concentrations against the criteria listed in Section 8.5.3. Samples shall not be analyzed if the LCS does not meet the criteria specified in Section 8.5.3.

9.5.3.8 If the LCS meets all the criteria specified in Section 8.5.3, the remainder of the 12-hour analytical period may be used for the analysis of blanks and samples.

9.5.4 Quantitation Limit Standard

A QL standard at a concentration of 0.5 μg/L must be analyzed to verify that the low detection limits for vinyl chloride, 1,2-dichloroethane, carbon tetrachloride, cis-1,3-

dichloropropane, and trans-1,3-dichloropropane can be achieved. Prepare and analyze the QL standard in a manner analogous to the continuing calibration standard except use 0.5 µL of the RAP CAL solution.

9.5.4.1 Analysis on Incos-50A, and Incos-XL systems

9.5.4.1.1 Fill a 25-mL syringe with method blank water. Invert the syringe, remove any air bubbles, and bring the level to 25 mL by displacement with the plunger.

9.5.4.1.2 Lay the syringe on the lab bench in the hood and spike the water with 2.5 µL of IS/Surr Solution. The amount used results in final concentration 5 µg/L.

9.5.4.1.3 Spike the water with 0.5 µL of the Low level RAP CAL Mix, 25/250 ng/µL. The amount used results in final concentration 0.5/5 µg/L.

9.5.4.1.4 Attach the syringe to the luer lock mount on the autosampler. Open the mount valve and inject the contents of the syringe into the sparge cell and close the valve. Remove the syringe from the mount

9.5.4.2 Analysis on HP5973H & HP5973J system.

9.5.4.2.1 The QL Standard is prepared in 50-mL gas tight syringe and then transferred to 40mL VOA vials which is pre-cleaned.

9.5.4.2.2 Fill a 50-mL gas-tight syringe with method blank water. Invert the syringe, remove any air bubbles, and bring the level to 50-mL by displacement with the plunger.

9.5.4.2.3 Spike the water with 1 µL of the Low level RAP CAL Mix, 25/250 ng/µL. The amount used results in final concentration 0.5/5 µg/L.

9.5.4.2.4 Cap the end of the syringe. Rotate and invert the closed syringe to mix. Let the standard solution equilibrate in the syringe for about 1 minutes. While the standard solution is equilibrating, label the 40-mL vial with information about the standard.

9.5.4.2.5 Gently decant the standard solution into the 40-mL vial, down the side of the vial, without any agitation. Overfill the vial to form an inverted meniscus. Cap the vial. Invert the vial to ensure that there are no air bubbles present.

9.5.4.2.6 Gently place the vial in the appropriate autosampler position. Avoid causing any hairline cracks in the vial, as this may result in the vial disintegrating in the autosampler.

9.5.4.2.7 The autosampler will analyze a 25 mL aliquot and add 1 μL of the 125 ng/μL IS/SMC solution

9.5.4.3 Press the start button on the concentrator to begin purging the standard.

9.5.4.4 Setup the GC/MS system with the appropriate GC and mass spectrometer conditions. See Attachment D.

9.5.4.5 Analyze the standard and acquire the data.

9.5.4.6 Quantitate the data and print out a quantitation report and chromatogram.

9.5.4.7 Evaluate the calculated concentrations against the criteria listed in Section 8.6.4. Samples shall not be analyzed if the QL standard does not meet the criteria specified in Section 8.6.4.

9.5.4.8 If the QL standard meets all the criteria specified in Section 8.6.4, the remainder of the 12-hour analytical period may be used for the analysis of blanks and samples.

9.5.5 Method blank analysis.

After the initial or continuing calibration is performed and before samples are analyzed, a method, or laboratory blank analysis shall be conducted.

9.5.5.1 Analysis on Incos-50A, and Incos-XL systems

9.5.5.1.1 Fill a 25-mL syringe with method blank water. Invert the syringe, remove any air bubbles, and bring the level to 25 mL by displacement with the plunger.

9.5.5.1.2 Lay the syringe on the lab bench in the hood and spike the water with 2.5 μL of IS/Surr Solution. The amount used results in final concentration 5 μg/L.

9.5.5.1.3 Attach the syringe to the luer lock mount on the autosampler. Open the mount valve and inject the contents of the syringe into the sparge cell and close the valve. Remove the syringe from the mount

9.5.5.2 Analysis on HP5973H & HP5973J system.

9.5.5.2.1 Gently fill a 40-mL vial with method blank water. Overfill the vial to form an inverted meniscus. Cap the vial. Invert the vial to ensure that there are no air bubbles present.

9.5.5.2.2 Gently place the vial in the appropriate autosampler position. Avoid causing any hairline cracks in the vial, as this may result in the vial disintegrating in the autosampler.

9.5.5.2.3 Analyze the method blank. The autosampler will analyze a 5 mL aliquot and add 1 μL of the 250 ng/μL IS/SMC solution.

9.5.5.3 Follow the instructions for the 5-mL method blank analysis in Sections 9.4.5.2 to 9.4.5.4 of this SOP.

9.5.5.4 Follow the file processing instructions for the 5-mL method blank in Section 9.4.5 of this SOP.

9.5.5.5 Review the results as discussed in Section 8.14 for qualitative identification of target analytes. Delete all reported hits which do not meet the qualitative criteria. Review all target compounds that are detected to verify they are integrated properly. Review the chromatogram for possible false negatives.

9.5.5.6 If the method blank meets all the criteria specified in Section 8.7, the remainder of the 12-hour analytical period may be used for the analysis of samples.

9.5.6 Sample analysis.

Samples shall be analyzed only after the BFB tune, initial calibration, continuing calibration, LCS, QL standard, and method blank analysis meet all of the appropriate criteria specified in the QA/QC section of this SOP.

9.5.6.1 Allow the sample to reach ambient room temperature before analysis.

9.5.6.2 The analyst shall again check that the numbers on the vials coincide with the numbers on the routing forms to ensure that the correct sample is being analyzed.

9.5.6.3 For the Incos-50A, and Incos-XL systems, break the chain of custody seal on the vial with a scalpel or other appropriate implement, again making note if the seal is missing or compromised in any way.

9.5.6.4 The analyst shall take note if the sample has an unusual color or other physical characteristic such as more than one phase, presence of a precipitate or unusual viscosity. If any physical signs of contamination are present a screening analysis to protect the analytical system from damage or contamination, and to determine the appropriate subsequent dilution is required. If an initial screening is necessary, it shall be at a 1:50 dilution, unless the laboratory supervisor decides otherwise.

9.5.6.5 The analyst shall also note in the runlog if there is head space present in the sealed sample vial.

9.5.6.6 For the Incos-50A, and Incos-XL systems, fill a 25-mL syringe with the sample. Invert the syringe, remove any air bubbles, and bring the level to 25-mL by displacement with the plunger. Any excess sample displaced from the syringe should be either place back into the sample vial or placed in the aqueous waste containers.

Spike the water with 2.5 μL of IS/SMC solution. The amounts used result in a final concentrations of 5 μg/L.

Attach the syringe to the luer lock mount on the appropriate autosampler position sparge apparatus. Open the mount valve and inject the contents of the syringe into the sparge cell and close the valve. Remove the syringe from the mount.

9.5.6.7 For the HP5973 systems, gently place the vial in the appropriate autosampler position. The autosampler will analyze a 25 mL aliquot and add 1 μL of the IS solution.

9.5.6.8 Follow the sample analysis instructions for the 5-mL sample in Sections 9.4.6.9 through 9.4.6.18.

9.5.6.9 Review the results as discussed in Section 8.14 for qualitative identification of target analytes. Delete all reported hits which do not meet the qualitative criteria. Review all target compounds that are detected to verify they are integrated properly. Review the chromatogram for possible false negatives.

9.5.7 Analysis of matrix spike and matrix spike duplicate samples.

9.5.7.1 Matrix spike and matrix spike duplicate analyses shall be performed according to the schedule prescribed in Section 8.12 of this SOP.

9.5.7.2 For the Incos-50A, and Incos-XL systems, matrix spike and matrix spike duplicate samples shall be analyzed according to the instructions for sample analysis (Section 9.5.4), except that the sample shall be spiked with 2.5 uL of Matrix Spike Solution, after spiking the sample with the IS/SMC Solution.

9.5.7.3 For the HP5973 systems, MS/MSD samples shall be analyzed according to the instructions for sample analysis (Section 9.5.4), except that the sample shall be spiked with 4 μL of the 50 ng/μL MS solution. Using a microliter syringe, inject the MS solution directly into the sample, through the teflon-lined septum of the 40-mL screw cap vial. Assuming the vial contains 40 mL of sample, the final spike concentration is 5 μg/L.

Since spiking of each vial for MS/MSD analysis occurs, the MS/MSD analysis will proceed only if a sufficient number of sample vials have been submitted to the laboratory.

9.5.8 Analysis of storage blanks.

9.5.8.1 A storage blank analysis must be performed according to the schedule specified in Section 8.8 of this SOP.

9.5.8.2 Storage blank samples shall be analyzed according to the instructions for sample analysis, Section 9.5.4 of this SOP.

9.6 Analysis of low level soils

The 12-hour analytical time period for this method begins with the injection of BFB and ends 12 hours after the injection time. Standards, blanks, and samples shall be analyzed within this 12-hour analytical time period. A sample heater is integrated into the Varian Archon autosampler for heating soil samples. The purging is conducted at 40°C. The analysis of low level soils is restricted to systems configured with Archon autosamplers.

9.6.1 Five-point initial calibration.

9.6.1.1 Standards are prepared in 40-mL vials which are pre-cleaned and contain a magnetic stir-bar and 5-mL of sodium bisulfate preservative.

9.6.1.2 Using a top-loading balance, tare the vial, weigh 5.0 g of purified soil into the vial, cap the vial, and record the weight in the runlog. Ensure that there is no sand on the top edge of the vial nor in the threads of the vial before capping because sand may compromise the seal of the vial.

9.6.1.3 For each calibration standard, uncap the vial, spike the appropriate amount of calibration standard (see Appendix A) directly into the sand, and quickly replace the cap on the vial. Use gas-tight microliter syringes for measuring the calibration standard.

9.6.1.4 Gently place the vial in the appropriate autosampler position to avoid causing any hairline cracks in the vial Any hairline cracks may result in a leak or the vial disintegrating in the autosampler.

9.6.1.5 Analyze the standards. The autosampler will add 5 mL of water and 1 μL of the IS/SMC solution to the standards.

9.6.1.6 If the initial calibration meets all the criteria specified in Section 8.3, the remainder of the 12-hour analytical period may be used for the analysis of LCS, blanks and samples, using the 50 μg/Kg calibration file to quantitate the blank and sample data files.

9.6.2 Continuing calibration.

The continuing calibration standard is analyzed at a concentration of 50 μg/Kg.

9.6.2.1 Follow Sections 9.6.1.1 through 9.6.1.5 for the analysis of the continuing calibration. The autosampler will add 5 mL of water and 1 μL of the IS/SMC solution to the standard.

9.6.2.2 Follow the instructions for the 5-mL water continuing calibration analysis in Section 9.4.2 except use the purified soil matrix and a heated purge.

9.6.2.3 If the continuing calibration meets all the criteria specified in Section 8.4, the

remainder of the 12-hour analytical period may be used for the analysis of blanks and samples, using the updated 50 μg/Kg continuing calibration file to quantitate the blank and sample data files.

9.6.3 Analysis of laboratory control sample.

After the initial or continuing calibration is performed a LCS shall be analyzed.

9.6.3.1 Follow Sections 9.6.1.1 and 9.6.1.2 for the LCS vial preparation.

9.6.3.2 Inject 10 μL of the 25 ng/μL LCS Spike Solution directly into the purified soil matrix. Gently tilt the vial containing the soil sample so that the tip of the microliter syringe is inserted into the soil itself. The final spike concentration is 50 μg/Kg.

9.6.3.3 Follow Sections 9.6.1.4 and 9.6.1.5. The autosampler will add 5 mL of method blank water and 1 uL of IS/SMC solution. Heat the sample to 40°C.

9.6.3.4 If the LCS meets all the criteria specified in Section 8.5, the remainder of the 12-hour analytical period may be used for the analysis of samples.

9.6.4 Quantitation Limit Standard

A quantitation standard at the concentration of the lowest point of the initial calibration must be analyzed immediately after the LCS for each 12-hour analytical period. In the event that an initial calibration is analyzed the lowest standard of the initial calibration satisfies this requirement

9.6.4.1 Prepare and load the quantitation limit standard (10μg/Kg) as described in Section 9.6.1 and Appendix A.

9.6.4.2 Press the start button on the concentrator to begin purging the standard.

9.6.4.3 Setup the GC/MS system with the appropriate GC and mass spectrometer conditions. See Attachment D.

9.6.4.4 Analyze the standard and acquire the data.

9.6.4.5 Quantitate the data and print out a quantitation report and chromatogram.

9.6.4.6 Evaluate the calculated concentrations against the criteria listed in Section 8.6.3. Samples shall not be analyzed if the QL standard does not meet the criteria specified in Section 8.6.3.

9.6.4.7 If the QL standard meets all the criteria specified in Section 8.6.3, the remainder of the 12-hour analytical period may be used for the analysis of blanks and samples.

9.6.5 Method blank analysis.

After the initial or continuing calibration is performed and before samples are analyzed, a method blank analysis shall be performed.

9.6.5.1 Follow Sections 9.6.1.2, 9.6.1.4, and 9.6.1.5 for the analysis of the method blank. The autosampler will add 5 mL of water and 1 μL of the IS/SMC solution. The sample heaters must be used for the soil method blanks.

9.6.5.2 Follow the instructions for the 5-mL water method blank analysis in Sections 9.4.5.2 through 9.4.5.5 except use the purified soil matrix and a heated purge.

9.6.5.3 If the method blank meets all the criteria specified in Section 8.7, the remainder of the 12-hour analytical period may be used for the analysis of samples.

9.6.6 Sample analysis.

Samples shall be analyzed only after the BFB tune, initial calibration, continuing calibration, laboratory control sample, and method blank analysis meet all of the appropriate criteria specified in the QA/QC Section of this SOP. Low level soil samples for VOA should be received in screw-cap 40-mL VOA vials, with approximately 5 grams of sample, 5 mL of sodium bisulfate preservative solution, and magnetic stir-bar. Section 9.6.7 addresses sample preparation of soil samples that are received in Encore samplers or Soil cores.

9.6.6.1 Gloves must be worn when handling the sample vial since the vial has been tared. If any soil is noted on the exterior of the vial or cap, it must be carefully removed.

9.6.6.2 The analyst shall again check that the numbers on the container coincide with the numbers on the routing forms to ensure that the correct sample is being analyzed.

9.6.6.3 Remove the sample vial from the refrigerator and allow it to warm to room temperature. Shake the vial gently to ensure that the contents move freely and that stirring will be effective.

9.6.6.4 Weigh the vial and contents to the nearest 0.1 g and record the weight in the runlog. The weight obtained in the laboratory is compared to the weight obtained in the field to verify that the sample weight is accurate. Any discrepancies in the weights are to be noted in the report narrative.

9.6.6.5 Follow Sections 9.6.1.4 and 9.6.1.5 for the analysis of each sample. The autosampler will add 5 mL of method blank water and 1 μL of the IS/SMC solution to each sample.

9.6.6.6 Heat the sample to 40°C and follow the instructions for 5-mL water sample analysis in Sections 9.4.6.9 and 9.4.6.12 through 9.4.6.17.

9.6.6.7 If sample dilution is required, analyze the methanol preserved soil sample according to the instructions provided in Section 9.7. The sample should be diluted so that the target compound which was originally outside of the calibration range will fall within the upper ha

of the initial calibration range of the instrument, if possible.

It should be noted that results between 200 µg/Kg (upper calibration concentration for 5 g sample) and 1000 µg/Kg (lower calibration concentration for 100 µL aliquot of 5 g sample preserved in 10 mL of methanol) may not be determined accurately due to limitations with EPA Method 5035. This data gap is to be noted in the report narrative.

9.6.6.8 Determine the percent moisture following EPA Region 9 Lab SOP 460 using the separate soil aliquot provided by the sampler for this purpose. The concentrations of the target analytes will be reported based on the dry weight of the sample.

Note: If the sampler did not provide an aliquot of soil for determination of the moisture content then the results must be reported on a wet weight basis and the deviation indicated in the report narrative and on the spreadsheet.

9.6.7 Low Level Soil Sample Preparation

In the event that soil samples are received in Encore samplers or Soil core tubes, the following procedures must be used to transfer an aliquot of the sample into a 40mL VOA vial.

9.6.7.1 Preparation of Vials

All 40-mL VOA vials must contain 1 gram of sodium bisulfate, 5 mL of organic free water, and a magnetic stir bar. After all of these items have been added to the vial the vial must be weighed prior to the addition of the soil aliquot. Record the weight of these Vials in the VOA extraction logbook.

9.6.7.2 Samples in 5 gram Encore containers

9.6.7.2.1 Attach the Encore sampler to the extrusion tool. Then remove the end cap. Insert the Encore sampler into a pre-weighed 40-mL VOA vial. Press the plunger of the extrusion tool to add the sample aliquot to the vial. Immediately cap the vial.

9.6.7.2.2 Immediately after the sample aliquot is added to the vial the vial must be weighed. Record the weight of the vial on the appropriate line in the VOA extraction logbook and calculate the exact weight of the sample added to the vial.

9.6.7.2.3 Analyze the sample according to Section 9.6.6.

9.6.7.2.4 25 gram Encore Containers must be analyzed as medium level soils. The diameter of these sample containers prevents the direct addition of the soil aliquot into a 40-mL VOA vial.

9.6.7.3 Samples in Soil Core tubes.

9.6.7.3.1 Cut off the end of a 10-mL disposable plastic syringe.

9.6.7.3.2 Open an end of the soil core and jam the cut off syringe into the soil core to approximately the 5 mL mark. Remove the syringe containing the soil aliquot.

9.6.7.3.3 Insert the syringe containing the soil into a pre-weighed 40-mL VOA vial. Press the plunger of the syringe to add the sample aliquot to the vial. Immediately cap the vial.

9.6.7.3.4 Immediately after the sample aliquot is added to the vial the vial must be weighed. Record the weight of the vial on the appropriate line in the VOA extraction logbook and calculate the exact weight of the sample added to the vial.

9.6.7.3.5 Analyze the sample according to Section 9.6.6.

9.6.8 Analysis of matrix spike and matrix spike duplicate samples.

9.6.8.1 Matrix spike and matrix spike duplicate analyses shall be performed according to the schedule prescribed in Section 8.12 of this SOP when these samples are provided by the field sampler.

9.6.8.2 Matrix spike and matrix spike duplicate samples shall be analyzed according to the instructions for sample analysis (Section 9.6.6), except that 5 μL of the 50 ng/μL MS Solution will be injected directly into the soil sample vial. Gently tilt the vial containing the soil sample so that the tip of the microliter syringe is inserted into the soil itself. The final spike concentration is 50 μg/Kg. The autosampler will add 5 mL of method blank water and 1 uL of IS/SMC solution. Heat the sample to 40°C.

9.6.9 Analysis of storage blank samples.

9.6.9.1 A storage blank analysis must be performed according to the schedule specified in Section 8.8 of this SOP.

9.6.9.2 Storage blank samples shall be analyzed according to the instructions for sample analysis, Section 9.4.6 of this SOP.

9.7 Analysis of soils using medium level soil extraction method.

The medium level soil extraction method shall be used to analyze soils that are expected to contain high levels of volatile organics, for screening soil samples before analysis by the low level method, or to perform a dilution required on a soil sample analyzed by the low level method . The 12 hour analytical time period for this method begins with the injection of BFB and ends 12 hours after the injection time. Standards, blanks, and samples shall be analyzed within this 12 hour analytical time period. The purge and trap concentrator should be equipped with 5-mL sparge cells.

9.7.1 Initial calibration.

Because the methanol extract and method blank water mixture is purged at ambient temperature, the initial calibration for 5-mL water samples (Section 9.4.1) shall be used for this method.

9.7.2 Continuing calibration

Because the methanol extract and method blank water mixture is purged at ambient temperature, the continuing calibration for 5-mL water samples (Section 9.4.2) shall be used for this method.

9.7.3 Laboratory Control Sample

Because the methanol extract and method blank water mixture is purged at ambient temperature, the LCS for 5-mL water samples (Section 9.4.3) shall be used for this method.

9.7.4 QL Standard

Because the methanol extract and method blank water mixture is purged at ambient temperature, the QL standard for 5-mL water samples (Section 9.4.4) shall be used for this method.

9.7.5 Method blank analysis.

After the initial or continuing calibration is performed and before samples are analyzed, a method, or laboratory blank analysis shall be conducted.

9.7.5.1 Using a top loading balance, weigh 5.0 g of purified soil into a tared 15-mL vial. Record the actual weight to the nearest 0.1 g in the log book.

9.7.5.2 Quickly add 10.0 mL of purge and trap grade methanol to the vial. Cap and shake the vial for 2 minutes. The steps in Sections 9.7.3.1 and 9.7.3.2 must be done rapidly in order to prevent the loss of volatile organics from the soil.

9.7.5.3 Using a disposable pipette, transfer approximately 1 mL of extract to a GC vial for storage in the volatiles laboratory refrigerator at 4°C. This method blank extract shall be used for all medium level soils extracted at the same time.

9.7.5.4 Analyze 100 μL of the extract in 4.9 mL of method blank water according to the instructions for 5-mL water method blank analysis, in Section 9.4.5.

9.7.5.5 If the method blank meets all the criteria specified in Section 8.7, the remainder of the 12-hour analytical period may be used for the analysis of samples.

9.7.6 Sample analysis.

Samples shall be analyzed only after the BFB tune, initial calibration, continuing calibration, LCS, QL standard and method blank analysis meet all of the appropriate criteria specified in the QA/QC section of this SOP.

9.7.6.1 Follow the steps in Section 9.6.6 regarding the procedures for the sequence of analysis and checking the sample integrity.

9.7.6.2 Unpreserved soil samples.

9.7.6.2.1 Samples in 5g Encore containers

9.7.6.2.1.1 Attach the Encore sampler to the extrusion tool. Then remove the end cap. Insert the Encore sampler into a pre-weighed 40mL VOA vial. Press the plunger of the extrusion tool to add the sample aliquot to the vial. Immediately cap the vial.

9.7.6.2.1.2 Immediately after the sample aliquot is added to the vial the vial must be weighed. Record the weight of the vial on the appropriate line in the VOA extraction logbook and calculate the exact weight of the sample added to the vial.

9.7.6.2.1.3 Add the 10mL of purge & trap grade methanol to the vial. Shake the vial for 1 minute.

9.7.6.2.1.4 Using a disposable pipette, transfer approximately 1 mL of extract to a GC vial for storage in the volatile laboratory refrigerator at 4°C. This extract shall be used for the analysis and any subsequent dilutions which may be necessary.

9.7.6.2.2 Samples in 25g Encore containers

9.7.6.2.2.1 Attach the Encore sampler to the extrusion tool. Then remove the end cap. Insert the Encore sampler into a pre-weighed 4 oz jar. Press the plunger of the extrusion tool to add the sample aliquot to the vial. Immediately cap the jar.

9.7.6.2.2.2 Immediately after the sample aliquot is added to the jar the jar must be weighed. Record the weight of the jar on the appropriate line in the VOA extraction logbook and calculate the exact weight of the sample added to the jar.

9.7.6.2.2.3 Quickly add 50.0 mL of purge and trap grade methanol to the jar. Cap and shake the jar for 1 minutes. The steps in Sections 9.7.4.2.2.1through 9.7.4.2.2.3 must be done rapidly in order to prevent the loss of volatile organics from the sample.

9.7.6.2.2.4 Using a disposable pipette, transfer approximately 1 mL of extract to a GC vial for storage in the volatile laboratory refrigerator at 4°C. This extract shall be used for the analysis and any subsequent dilutions which may be necessary.

9.7.6.2.3 Samples in Soil Core tubes.

9.7.6.2.3.1 Cut off the end of a 10mL disposable plastic syringe.

9.7.6.2.3.2 Open an end of the soil core and jam the cut off syringe into the soil core to approximately the 5 mL mark. Remove the syringe containing the soil aliquot.

9.7.6.2.3.3 Insert the syringe containing the soil into a pre-weighed 40-mL VOA vial. Press the plunger of the syringe to add the sample aliquot to the vial. Immediately cap the vial.

9.7.6.2.3.4 Immediately after the sample aliquot is added to the vial the vial must be weighed. Record the weight of the vial on the appropriate line in the VOA extraction logbook and calculate the exact weight of the sample added to the vial.

9.7.6.2.3.5 Quickly add 10.0 mL of purge and trap grade methanol to the vial. Cap and shake the vial for 1 minutes. The steps in Sections 9.7.4.2.3.3 through 9.7.4.2.3.5 must be done rapidly in order to prevent the loss of volatile organics from the sample.

9.7.6.2.3.6 Using a disposable pipette, transfer approximately 1 mL of extract to a GC vial for storage in the volatile laboratory refrigerator at 4°C. This extract shall be used for the analysis and any subsequent dilutions which may be necessary.

9.7.6.3 Soil samples preserved with methanol.

9.7.6.3.1 Gloves must be worn when handling the sample vial since the vial has been tared. If any soil is noted on the exterior of the vial or cap, it must be carefully removed.

9.7.6.3.2 Remove the sample from the refrigerator and allow it to warm to room temperature. Shake the vial gently to ensure that the contents move freely and that stirring will be effective.

9.7.6.3.3 Weigh the vial and contents to the nearest 0.1 g and record the weight in the runlog. The weight obtained in the laboratory is compared to the weight obtained in the field to verify that the sample weight is accurate. Any discrepancies in the weights are to be noted in the report narrative.

9.7.6.3.4 Using a disposable pipette, transfer approximately 1 mL of extract to a GC vial for storage in the volatile laboratory refrigerator at 4°C. This extract shall be used for the analysis and any subsequent dilutions which may be necessary.

9.7.6.4 Analyze 100 μL of the extract in 4.9 mL of method blank water according to the instructions for 5-mL sample analysis in Sections 9.4.6.

9.7.6.5 If any of the target compounds exceed the initial calibration range of the instrument, a dilution shall be performed using a smaller aliquot of the extract combined with method blank water to a total volume of 5 mL. The sample should be diluted so that the target compound(s) which was originally outside of the calibration range will fall within the upper range of the initial calibration of the instrument.

9.7.7 Analysis of matrix spike and matrix spike duplicate samples.

9.7.7.1 Matrix spike and matrix spike duplicate analyses shall be performed according to the schedule prescribed in Section 8.12 of this SOP.

9.7.7.2 Add 9.0 mL of methanol and 1.0 mL of matrix spike solution to each of the two aliquots of the soil sample chosen for spiking.

9.7.7.3 Using a 100 μL aliquot of the extract, analyze the matrix spike and matrix spike duplicate sample according to the instructions for medium level soil sample analysis (Section 9.7.4).

9.7.8 Analysis of storage blank samples.

9.7.8.1 A storage blank analysis must be performed according to the schedule specified in Section 8.8 of this SOP.

9.7.8.2 Storage blank samples shall be analyzed according to the instructions for sample analysis, Section 9.4.6 of this SOP.

9.8 Autosampler operation.

The Tekmar ALS2016, OI DPM-16, and Varian Archon autosamplers may be employed in any of the methods described in Sections 9.4 through 9.7. The operating parameters of the autosamplers are found in Attachment C at the end of this SOP.

9.8.1 Outfit the autosampler with the appropriate type and size glassware required for the method used, e.g. 25 mL fritted sparge cell or 40-mL vial for Low Level VOA analysis.

9.8.2 Prepare and deliver each standard, blank, or sample into a separate sparge cell or 40-mL vial according to the instructions set forth in the analysis sections of this SOP.

9.8.3 Display the ALS function on the purge and trap concentrator and select the purge positions

which are to be used in the autosampler sequence (total possible are 1 through 16 for the Tekmar and OI autosamplers and 1- 50 for the Varian Archon autosampler).

9.8.4 Position the concentrator to the first cell to be used in the sequence.

9.8.5 The analytical sequence file must be created using the data acquisition software. Complete the header information for each sample and save the file. Load and run the sequence.

9.8.6 Press the start button on the concentrator to start the sequence.

9.8.7 Each data file will be automatically quantitated. The files should be processed in accordance with the instructions found in the sample analysis section relevant to the type of analysis being conducted.

10 DOCUMENTATION

10.1 Data from the Region 9 Laboratory is presented to the client in one of two general reporting formats: a complete, validatible data package or a summary report. For the former the laboratory prepares summary forms of calibration, quality control, and sample results and provides this information along with the raw data, a Report Narrative, and an analytical report spreadsheet to the client. If a summary report is all that is required the laboratory prepares a Report Narrative and the analytical spreadsheet for delivery to the client and collects the raw data which will be filed at the laboratory. Section 10.2 details the requirements of a complete data package and Section 10.3 lists the summary report requirements.

10.2 Data package assembly.

The analyst, or other chemist, shall assemble a discrete data package for each SDG in each case requiring the delivery of a validatible data package according to the following instructions, and in the following order. Each section of the data package shall have a cover sheet titled with the appropriate section name. The data package shall be sequentially numbered after assembly using a hand operated numerator.

10.2.1 Report Narrative section.

The Report Narrative section shall contain a text narrative describing, but not limited to, the following. A report narrative template, VOA2_TEMP.wpd is avialable on the network in G:\user\share\esat_data\templates\

10.2.1.1 Site name.
10.2.1.2 Case number.
10.2.1.3 SDG number.
10.2.1.4 Date(s) the samples were received.
10.2.1.5 EPA sample number.
10.2.1.6 Region 9 laboratory sample number.
10.2.1.7 Summary of the analyses performed.
10.2.1.8 Problems with the analyses.

10.2.1.9 Summary of the QA/QC results.

10.2.2 Analytical report spreadsheet

10.2.2.1 A spreadsheet (Lotus 123, Version 4) containing a summary of the results for all target analytes for all samples and blanks will be included in the data package. The report spreadsheet templates are avialable on the network in G:\user\share\esat_data\templates\

10.2.2.2 The header information for each sample will contain the station location, Sample ID, Lab Sample ID, and date sampled.

10.2.2.3 The results section will contain the results for each target analyte as follows:

If an analyte is not detected then the quantitation limit with a "U" qualifier will be reported

If an analyte is detected the following qualifier may be used:

J The reported concentration is an estimated value.
N The qualification (chemical identity) is uncertain.

In the event that a result is qualified, a comment letter must be defined in the report narrative. This letter must be present on the spreadsheet next to the affected result.

10.2.3 Tracking Forms section.

The Tracking Form section shall contain the following forms.

10.2.3.1 Region 9 sample cross reference form.
10.2.3.2 A copy of the chain of custody record received with each sample shipment.
10.2.3.3 A copy of the shipper's airbill, or bill of lading.

10.2.4 QA/QC Summary section.

The QA/QC section shall contain all of the QA/QC summary forms for the specific sample delivery group. Forms are generated using the EnviroQuant software. All of the forms shall be checked by the analyst to ensure that all of the filenames are correct, and that all of the appropriate standards, blanks, samples, spikes, and tune files have been included.

10.2.4.1 System Monitoring Compound / Internal Standard area summary data in chronological order. Include all analyses for each day. Note any data not used or not part of the SDG.

10.2.4.2 MS/MSD recovery report.

10.2.5 Sample section.

The sample section shall contain the following forms and raw data for each sample in the sample delivery group, assembled in laboratory ID order.

Quantitation report
Reconstructed ion chromatogram (RIC) of the data file
Extracted Ion chromatogram (EIC), spectra and reference spectra of target compounds detected, internal standards and surrogates.
Documentation of manual integrations reviewed by supervisors.
Library search compounds
- Integrations
- Chromatogram
- Library comparison
- LSC summary

All sample analyses must be included. Sample dilutions and analyses that failed QC criteria do not require Library search compounds. Data for each individual sample should be arranged as follows:

Full strength/least diluted analysis
Sample dilutions
Any analyses not being used.

10.2.6 MS/MSD Data Section

The MS/MSD Data Section shall contain the following raw data.

Quantitation report
Reconstructed ion chromatogram (RIC) of the data file
Extracted Ion chromatogram (EIC), spectra and reference spectra of target compounds detected, internal standards and surrogates.
Documentation of manual integrations reviewed by supervisors.
Library search compounds.

10.2.7 Instrument QC Section

The instrument QC section shall be arraigned in chronological order by instrument and shall include the following:

10.2.7.1 Reviewed Initial Calibration package
Copy of peer reviewed instrument run logbook page
Tune data (background subtracted spectra, mass listing, and labeled RIC)
Initial Calibration summary form
Each point of the ICAL arrange in chronological order

Quantitation report
Reconstructed ion chromatogram (RIC) of the data file
Extracted Ion chromatogram (EIC), spectra and reference spectra of all manual integrations, in order of elution
Manual integrations must be initialed and dated by a supervisor

10.2.7.2 Daily Analytical Packets. In chronological order immediately after applicable ICAL
Copy of peer reviewed instrument run logbook page
Tune data (background subtracted spectra, mass listing, and labeled RIC)
Continuing Calibrations
- Continuing Cal summary form
- Quantitation report
- Reconstructed ion chromatogram (RIC) of the data file
- Extracted Ion chromatogram (EIC), spectra and reference spectra of all manual integrations, in order of elution
- Manual integrations must be initialed and dated by a supervisor

LCS data (same as Ccal)
Quantitation Limit Standard (same as Ccal)

All Continuing cals, LCS, and QL standards need to be included. For example if the first Ccal fail criteria and the second Ccal passes, both must be included in the data package. Any standards that are not used must be in chronological order immediately after the standard(s) that passed QC limits.

Method blank data (same as for sample)

All method blanks analyzed must be included in the data package. For example if the first method blank fails QC criteria and the second method blank is analyzed and it passes, the second method blank will be used for reporting, but the first method blank data must be included in the date package. Any blanks that failed QC criteria must be in chronological order immediately after the blank that passed QC limits.

10.2.8 Logbooks and Miscellaneous Data.

10.2.8.1 Copies of all applicable standards preparation logbook pages.

10.2.8.2 Copies of all Sample weight logbooks for low level soils (if applicable.)

10.2.8.3 Copies of all extraction logbook pages for medium level soil analysis (if applicable.)

10.2.8.4 Copies of all balance calibration logbooks (if applicable.)

10.2.8.5 Storage Blank Data

10.3 Summary Report and Raw Data

When the client requirements stipulate a summary report the laboratory prepares the Report Narrative, analytical results spreadsheet, and organizes the raw data associated with each SDG for filing in the event that future data review or validation is required.

10.3.1 The Report Narrative is prepared according to the requirements listed in Section 10.2.1.

10.3.2 The analytical results spreadsheet is prepared according to the specifications provided in Section 10.2.2.

10.3.3 The raw data associated with the analysis of all the samples in the SDG must be organized for filing and presented for review along with the Report Narrative and the spreadsheet. No summary forms need be generated with the raw data but any forms which would normally be generated as part of the analysis must be included in the package. For example, the calibration summary reports generated by the data system and used by the analyst to assess the acceptability of the calibration should be filed with the raw data.

10.3.3.1 Sample tracking information as detailed in Section 10.2.3 should be included as the analyst has a copy of the information readily available.

10.3.3.2 Sample raw data organized by EPA sample ID must include: the quantitation report; the RIC; the raw and enhanced spectra of the target compounds detected in the sample, as well as the enhanced spectra of the corresponding target compound in the calibration file; and enhanced spectra of non-target compounds detected in the sample along with the library search listing the three best matches for the non-target compounds. (Section 10.2.5.3 through 10.2.5.6)

10.3.3.3 Calibration data must include any avialable summary information and the quantitation reports and RICs for all initial calibrations and continuing calibrations associated with the SDG. This information must be organized by instrument and date. Additionally, any manual integration must be demonstrated by including the associated peak integration.

10.3.3.4 Raw data for QC samples must be included. Tuning data and the associated summary used by the analyst to determine acceptability, blanks (quant report, RIC and spectra and TICs), MS/MSD data (quant report and RICs) should all be included in this order.

10.3.3.5 Runlogs and standard preparation logbooks need not be included in the raw data as these are already filed in an accessible manner in the laboratory.

10.4 Technical review.

Each data package shall be reviewed by the GC/MS Group Leader or a senior level chemist, other than the chemist who performed the analyses. After the peer review is performed, the Report

Narrative shall be signed by the ESAT Assistant Team Leader and the data package shall be submitted to Region 9.

10.5 Injection logbook.

A logbook shall be maintained for each instrument in accordance with the instructions in ESAT SOP #850

10.6 Refrigerator temperature log.

A refrigerator temperature log shall be maintained for each refrigerator or freezer according to SOP #805. The temperatures shall be recorded on a daily basis whenever the refrigerator is in use.

11 REFERENCES

11.1 Region 9 SOP 255. Standard Preparation for Volatile Organics Lab.
11.2 Region 9 SOP 205. Preparation of Organic Free Method Blank Water.
11.3 Region 9 SOP 835. Chromatographic Integration Procedures.
11.4 Region 9 SOP 805, Refrigerator Temperature Monitoring.
11.5 Finnigan Incos-50 Operator's Manual.
11.6 Tekmar LSC2000 and ALS2016 Operator's Manuals.
11.7 OI 4560 and DPM16 Operator's Manuals.
11.8 Region 9 SOP 125. Sample Disposal
11.9 Region 9 SOP 460. Percent Moisture Determination.
11.10 EPA Method 524.2 Measurement of Purgeable Organic Compounds in Water by Capillary Column Gas Chromatography/Mass Spectrometry; Revision 4, August 1992.
11.11 EPA Method 8260A Volatile Organic Compounds by Gas Chromatography/Mass Spectrometry: Capillary Column Technique; Revision 1, September 1994.
11.12 EPA Method 5035 Closed-System Purge-and-Trap and Extraction for Volatile Organics in Soil and Waste Samples; Revision 0, December 1996.

12 DEVIATIONS FROM REFERENCE METHOD

12.1 The BFB Ion Abundance criteria differs from the reference methods.

12.2 Bromochloromethane is used as an internal standard.

12.3 The Initial Calibration criteria differs from the reference methods.

12.4 The Continuing Calibration criteria differs from the reference methods.

12.5 The minimum RRFs for Bromoform and 1,1,2,2-tetrachloroethane are lower than the minimum RRFs in 8260B.

12.6 The RRFs from the daily continuing calibration or corresponding point of the initial calibration are used to calculate sample results.

12.7 The Surrogate recoveries listed in Section 8.11 are slightly different than the reference method

Appendix A
5 mL Water and Soil
Calibration Criteria

For all samples analyzed with a 5 mL purge volume, the response factors of the compounds listed below must meet the minimum RRF criteria at each concentration level, and maximum %RSD criteria for the initial calibration, with allowance made for up to two volatile compounds. However, the RRFs for those two compounds must be greater than or equal to 0.010, and the %RSD of those two compounds must be less than or equal to 40.0% for the initial calibration to be acceptable.

Compound	Min RRF	Max %RSD	Max %D
Dichlorodifluoromethane	0.100	20	25
Chloromethane	0.010	NA	NA
Vinyl chloride	0.100	20	25
Bromomethane	0.100	20	25
Chloroethane	0.010	NA	NA
Trichlorofluoromethane	0.100	20	25
1,1-Dichloroethene	0.100	20	25
Acetone	0.010	NA	NA
Carbon disulfide	0.010	NA	NA
Methylene chloride	0.010	NA	NA
trans-1,2-Dichloroethene	0.010	NA	NA
Methyl Tert-Butyl Ether	0.100	20	25
1,1-Dichloroethane	0.200	20	25
Ethyl Tert-Butyl Ether	0.010	NA	NA
cis-1,2-Dichloroethene	0.010	NA	NA
2-Butanone	0.010	NA	NA
Chloroform	0.200	20	25
1,2-Dichloroethane-d4 (SMC)	0.010	NA	NA
1,2-Dichloroethane	0.100	20	25
t-Amyl-methyl ether	0.010	NA	NA
1,1,1-Trichloroethane	0.100	20	25
Carbon tetrachloride	0.100	20	25
Benzene	0.500	20	25
Trichloroethene	0.200	20	25
1,2-Dichloropropane	0.010	NA	NA
Bromodichloromethane	0.200	20	25
cis-1,3-Dichloropropene	0.100	20	25
trans-1,3-Dichloropropene	0.080	20	25
1,1,2-Trichloroethane	0.080	20	25
Dibromochloromethane	0.100	20	25
4-Methyl-2-pentanone	0.010	NA	NA

Compound	Min RRF	Max %RSD	Max %D
Toluene	0.400	20	25
Tetrachloroethene	0.200	20	25
1,3-Dichloropropane	0.100	20	25
2-Hexanone	0.010	NA	NA
1,2-Dibromoethane	0.100	20	25
Chlorobenzene	0.500	20	25
Ethylbenzene	0.100	20	25
Xylene (m & p)	0.300	20	25
Xylene (ortho)	0.300	20	25
Styrene	0.300	20	25
Bromoform	0.100	20	25
Bromofluorobenzene (SMC)	0.200	20	25
1,1,2,2-Tetrachloroethane	0.300	20	25
1,2,3-Trichloropropane	0.080	20	25
1,3-Dichlorobenzene	0.400	20	25
1,4-Dichlorobenzene	0.400	20	25
1,2-Dichlorobenzene	0.400	20	25
1,2-Dibromo-3-chloropropane	0.010	NA	NA

Toluene-d8 (SMC)	0.010	NA	NA

NA - These compounds have no associated %RSD or %D criteria.

Appendix B

25-mL Calibration Standard Amounts
Incos-50A & Incos-XL

CALIBRATION POINT	Amount IS/Surr Solution 50 ng/µl	Amount RAP CAL Mix 25 - 250 ng/µL *
25 µg/L	2.5 µL	25 µL
10 µg/L	2.5 µL	10 µL
5 µg/L	2.5 µL	5 µL
2 µg/L	2.5 µL	2 µL
1 µg/L	2.5 µL	1 µL

25 mL Calibration Standard Amounts
HP5973H & HP5973J with Arcon Autosamplers

CALIBRATION POINT	Amount RAP CAL Mix 25 - 250 ng/µl *
25 - 250 µg/L	50 µl
10 - 100 µg/L	20 µl
5 - 50 µg/L	10 µl
2 - 20 µg/L	4 µl
1 - 10 µg/L	2 µl

*Ketones are at 10 times the concentration of the other target compounds.

These aqueous calibration standards for HP5973H and the HP5973J are prepared at a final volume of 50mL. The Arcon autosampler automatically adds 1 uL of 125 ug/mL internal standard/surrogate to the 25mL of these standards that is used when analyzed.

ATTACHMENT A

Target Compound List and Quantitation Limits for Volatile Organic Compound Analysis

The following table lists the Target Compound list for VOC analysis. The table also includes the CAS number, internal standard reference, quantitation mass (m/z), and quantitation limits for each compound.

Compound Name	CAS Number	ISTD #	Surr #	Quant Ion (m/z)	Quantitation limits			
					Water Samples 5 mL (µg/L)	Water Samples 25 mL (µg/L)	Soil Samples (µg/Kg)	
							Low	Med
Bromochloromethane	460-0-4	1		128				
1,4-Difluorobenzene	540-36-3	2		114				
Chlorobenzene-d5	3114-55-4	3		117				
1,2-Dichloroethane-d4	17060-7-0	1	1	65				
Toluene-d8	2037-26-5	3	2	98				
4-Bromofluorobenzene	460-0-4	3	3	174				
Dichlorodifluoromethane	75-71-8	1	1	85	10	1	10	1000
Chloromethane	74-87-3	1	1	50	10	1	10	1000
Bromomethane	74-83-9	1	1	94	10	1	10	1000
Vinyl Chloride	75-1-4	1	1	62	10	0.5	10	1000
Chloroethane	75-0-3	1	1	64	10	1	10	1000
Trichlorofluoromethane	75-69-4	1	1	101	10	1	10	1000
1,1-Dichloroethene	75-35-4	1	1	96	10	1	10	1000
Acetone	67-64-1	1		43	10	10	10	1000
Carbon disulfide	75-15-0	1		76	10	1	10	1000
Methylene chloride	75-9-2	1	1	84	10	1	10	1000
trans-1,2-Dichloroethene	156-60-5	1	1	96	10	1	10	1000
Methyl Tert-Butyl Ether	1634-4-4	1		73	10	1	10	1000
1,1-Dichloroethane	75-34-3	1	1	63	10	1	10	1000
Ethyl Tert-Butyl Ether	637-92-3	1		59	10	1	10	1000
cis-1,2-Dichloroethene	156-59-2	1	1	96	10	1	10	1000
2-Butanone	78-93-3	1		43	10	10	10	1000
Chloroform	67-66-3	1	1	83	10	1	10	1000
1,2-Dichloroethane	107-6-2	1	1	62	10	0.5	10	1000
tert-Amyl methyl ether	994-05-8	1		73	10	10	10	1000
1,1,1-Trichloroethane	71-55-6	2	1	97	10	1	10	1000
Carbon tetrachloride	56-23-5	2	1	117	10	0.5	10	1000
Benzene	71-43-2	2	2	78	10	1	10	1000
Trichloroethene	79-1-6	2	1	130	10	1	10	1000
1,2-Dichloropropane	78-87-5	2	1	63	10	1	10	1000

Compound Name	CAS Number	ISTD #	Surr #	Quant Ion (m/z)	Quantitation limits			
					Water Samples 5 mL (µg/L)	Water Samples 25 mL (µg/L)	Soil Samples (µg/Kg)	
							Low	Med
Bromodichloromethane	75-27-4	2	1	83	10	1	10	1000
cis-1,3-Dichloropropene	10061-1-5	2	1	75	10	0.5	10	1000
trans-1,3-Dichloropropene	10061-2-6	2	1	75	10	0.5	10	1000
1,1,2-Trichloroethane	79-0-5	2	3	97	10	1	10	1000
Dibromochloromethane	124-48-1	2	3	129	10	1	10	1000
4-Methyl-2-Pentanone	108-10-1	3		43	10	10	10	1000
Toluene	108-88-3	3	2	92	10	1	10	1000
Tetrachloroethene	127-18-4	3	3	164	10	1	10	1000
1,3-Dichloropropane	142-28-9	3	3	76	10	1	10	1000
2-Hexanone	591-78-6	3		43	10	10	10	1000
1,2-Dibromoethane (EDB)	106-93-4	3	3	107	10	1	10	1000
Chlorobenzene	108-90-7	3	3	112	10	1	10	1000
Ethylbenzene	100-41-4	3	2	106	10	1	10	1000
p & m-Xylene	1330-20-7	3	2	106	10	1	10	1000
o-Xylene	95-47-6	3	2	106	10	1	10	1000
Styrene	100-42-5	3	2	104	10	1	10	1000
Bromoform	75-25-2	3	3	173	10	1	10	1000
1,1,2,2-Tetrachloroethane	79-34-5	3	3	83	10	1	10	1000
1,2,3-Trichloropropane	96-18-4	3	3	75	10	1	10	1000
1,3-Dichlorobenzene	541-73-1	3	3	146	10	1	10	1000
1,4-Dichlorobenzene	106-46-7	3	3	146	10	1	10	1000
1,2-Dichlorobenzene	95-50-1	3	3	146	10	1	10	1000
1,2-Dibromo-3-chloropropane	96-12-8	3	3	157	10	2	10	1000

ATTACHMENT B

PURGE & TRAP CONCENTRATOR PARAMETERS

Tekmar LSC2000 Concentrator (Incos-50A)

The operating method for the TEKMAR LSC2000 A purge & trap concentrator which is interfaced with the Incos-50A GC/MS and the Tekmar ALS2016 Autosampler is as follows.

PARAMETER	SETTING
Standby temperature	30°C
Preheat temperature	N/A
Prepurge time	N/A
Sample temperature	Ambient for waters/40°C for soils
Purge Time	11 minutes
Dry purge	1 minute
Purge Flow	35 - 40 mL/min
Desorb preheat temperature	245°C
Desorb	6.00 minutes @ 250°C
Bake	4 minutes @ 260°C
Auto drain	On for waters/Off for soils
Bake gas bypass	Off for waters/ On for soils
Valve temperature	120°C
Mount temperature	40°C
Line temperature	120°C
Bottom of trap temperature	150°C

OI 4560 Concentrator (Incos-XL)

The operating method for the OI 4560 purge & trap concentrator which is interfaced with the Incos-XL GC/MS and the DPM-16 autosampler is as follows.

PARAMETER	SETTING
Standby temperature	30°C
Preheat temperature	N/A
Prepurge time	N/A
Sample temperature	Ambient for waters
Purge Time	11 minutes
Dry purge	3 minutes
Purge Flow	35 - 40 mL/min
Desorb preheat temperature	NA
Desorb	4.00 minutes @ 250°C
Bake	5 minutes @ 260°C
Valve temperature	100°C
Mount temperature	40°C
Line temperature	100°C
DPM160 transfer line	120°C

ATTACHMENT B

PURGE & TRAP CONCENTRATOR PARAMETERS

Tekmar 3000 Concentrator (HP5973)

The operating method for the TEKMAR 3000 A purge & trap concentrator which is interfaced with the HP5973 GC/MS and Archon Autosampler is as follows.

PARAMETER	SETTING
Standby temperature	32°C
Preheat temperature	N/A
Prepurge time	N/A
Sample temperature	Ambient for waters/40°C for soils
Purge Time	11 minutes
Dry purge	2minute
Purge Flow	35 - 40 mL/min
Desorb preheat temperature	245°C
Desorb	6.00 minutes @ 250°C
Bake	6 minutes @ 260°C
Auto drain	On for waters/Off for soils
Bake gas bypass	Off for waters/ On for soils
Valve temperature	120°C
Mount temperature	40°C
Line temperature	120°C
Bottom of trap temperature	NA

ATTACHMENT C

AUTOSAMPLER PARAMETERS

Tekmar ALS2016 Autosampler

The operating method for the ALS2016 autosampler which is interfaced with the Tekmar LSC2000 and an Incos-50 GC/MS is as follows.

PARAMETER	SETTING
Valve temperature	125°C
Line temperature	120°C
Sample temperature	Ambient for waters/40°C for soils
Auto drain	On for waters/Off for soils

OI DPM-16 Autosampler

The operating method for the DPM-16 autosampler which is interfaced with the OI 4560 and the Incos-XL GC/MS is as follows.

PARAMETER	SETTING
Valve temperature	100°C
Line temperature	100°C

Archon Autosampler

The operating method for the Archon autosampler which is interfaced with the Tekmar 3000 and the HP5973 GC/MS is as follows.

PARAMETER	SETTING
Valve temperature	100°C
Line temperature	110°C

First 25 mL water continuing calibration analyzed on Incos-50A on 01/11/98

CWA0111A

Laboratory Control Sample (LCS)
L??MMDD?

First LCS of the day = A
Second LCS of the day = B.....

Instrument	File ID
Incos-50A	LWA0101A
Incos-XL	LWC0530A
HP5973H	LWH0101A
HP5973J	LWJ0101A

QL Standard

Q??MMDD?
First QL standard analyzed on Incos-50A on 01/12/98

QWA0112A

Method Blanks

M??MMDD?

First blank of the day = A
Second blank of the day = B.....

Instrument	File ID/Blank ID
Incos-50A	MWA0101A
Incos-XL	MWC0530A
HP5973H	MWH0101A
HP5973J	MWJ0101A

Storage Blanks (waters only)

S??MMDD?

LAB ID = SBMMDD
where mmdd is the day the storage blank was placed in the sample refrigerator.

Instrument	File ID	LAB ID
Incos-50A	SWA0101A	SBMMDD
Incos-XL	SWC0530A	SBMMDD

HP5973H	SWH0101A	SBMMDD
HP5973J	SWJ0101A	SBMMDD

Samples including MS/MSD, Instrumnet Blanks, etc.

YY?####

YY = Federal Fiscal year (Starts October 1st)
? = Instrument Identifier
= sequential number (first sample analysis in the fiscal year = 0001)

The 100th sample analysis on Incos-XL

98C0100

Appendix A-13
Total Petroleum Hydrocarbons-CA LUFT

Table 3. Summary of Internal Quality Control Procedures for Total Petroleum Hydrocarbons (TPH) as Gasoline and Diesel by SW-846 Method 8015B

QC Element	Frequency	Acceptance Criteria	Corrective Action
Method Blank (MB)	Gasoline: One per each 12 hour time period and after unusually concentrated samples Diesel: One per Batch or SDG[a] (1 per 20 samples minimum) and for each instrument used	< CRQL for each compound	1. Investigate source of contamination and document corrective action measures 2. Re-extract and re-analyze all samples processed with a method blank that is out-of-control
Surrogate Spike [b]	Every sample and MB at midpoint of calibration range	Water Samples: 75-125% of expected value Soil Samples: 60-125% of expected value	1. Re-analyze all samples with non-compliant surrogate recoveries
Matrix Sike and Matrix Spike Duplicate (MS/MSD)	One MS/MSD set per batch or SDG (1 MS/MSD set per 20 samples minimum)	65-135% of expected value; ≤30 RPD between MS and MSD	1. Report in case narrative
Laboratory Control Sample (LCS)	Gasoline: one each 12-hour period; Diesel: one per Batch or SDG	80-120% of expected value	1. Re-extract and re-analyze all samples processed with out-of-control LCS

[a] SDG - Sample Delivery Group - each case of field samples received; or each 20 field samples within a case; or each 14 calendar day period during which field samples in a case are received.
[b] Surrogates for GRO: 4-bromofluorobenzene and 1,1,1-trifluorotoluene;
Surrogate for DRO: hexacosane or ortho-terphenyl

Dilute and reanalyze samples with one or more analytes at concentrations exceeding the range of the calibration curve. Results for such reanalyses should fall within the mid-range of the calibration curve. Report results and submit documentation for both analyses.

Appendix A-14
TTLC Metals

USEPA REGION 9 LABORATORY
RICHMOND, CALIFORNIA

STANDARD OPERATING PROCEDURE 503

DETERMINATION OF TRACE ELEMENTS IN SOLIDS BY INDUCTIVELY COUPLED PLASMA - ATOMIC EMISSION SPECTROMETRY

Prepared by:

_____ _____
Stephen Carroll, ESAT Region 9, Lockheed Martin Date

Review by:

_____ _____
Richard Bauer, Chemistry Team Leader Date

Approved by:

_____ _____
Brenda Bettencourt, Laboratory Director Date

Periodic Review:

Signature	Title	Date

STANDARD OPERATING PROCEDURE 503

DETERMINATION OF TRACE ELEMENTS IN WATER BY INDUCTIVELY COUPLED PLASMA - ATOMIC EMISSION SPECTROMETRY

This SOP was prepared by Lockheed Martin for the United States Environmental Protection Agency (USEPA) under the Environmental Services Assistance Team (ESAT) contract (EPA contract No. 68D60005).

APPROVED BY:

Patrick Hirata, Senior Chemist, Lockheed Martin	Date
Sujith Kumar, QA/QC Coordinator, Lockheed Martin	Date
Jack Berges, ESAT Team Manager, Lockheed Martin	Date

ESAT Document Control Number: ESAT-9B-3939

CONTENTS

1 SCOPE AND APPLICATION 4

2 METHOD SUMMARY 5

3 DEFINITIONS 5

4 HEALTH AND SAFETY 7

5 SAMPLE HANDLING AND PRESERVATION 7

6 INTERFERENCES 7

7 APPARATUS AND MATERIALS 9

8 QUALITY CONTROL PROCEDURES 11

9 ANALYTICAL PROCEDURES 16

10 DOCUMENTATION 18

11 REFERENCES 19

Table 1: Method Analytes and Interfering Elements 20

Table 2: Calibration Standards 21

Table 3: IPC, QCS, LFB/LFM/LFMD Concentrations 22

Attachment A - Deviations from Reference Method 6010B
Attachment B - Inorganic Standards and Reagents Preparation Log Book
Attachment C - Acid Digestion Log for Metals Preparation
Attachment D - MET-1 TJA ICAP 61E Run Log
Attachment E - Analytical Spreadsheet
Attachment F - QC Summary Report
Attachment G - IEC Tables

1 SCOPE AND APPLICATION

1.1 This SOP provides procedures for the determination of trace elements in solution by Inductively Coupled Plasma - Atomic Emission Spectrometry (ICP-AES) in environmental samples. It is applicable to sediments, sludges, solids and soils. The samples are analyzed using the TJA ICAP-61E. The preparation of samples analyzed in this method is detailed in Region 9 SOP #405. This SOP is based on EPA Method 6010B and is applicable to the determination of the following elements:

Analyte	Chemical Abstract Services Registry Number (CASRN)	Current Region 9 Laboratory Quantitation Limits (mg/Kg)
Aluminum (Al)	7429-90-5	200
Antimony (Sb)	7440-36-0	20
Arsenic (As)	7440-38-2	50
Barium (Ba)	7440-39-3	10
Beryllium (Be)	7440-41-7	0.2
Boron (B)	7440-42-8	20
Cadmium (Cd)	7440-43-9	1
Calcium (Ca)	7440-70-2	100
Chromium (Cr)	7440-47-3	2
Cobalt (Co)	7440-48-4	4
Copper (Cu)	7440-50-8	4
Iron (Fe)	7439-89-6	1000
Lead (Pb)	7439-92-1	30
Magnesium (Mg)	7439-95-4	100
Manganese (Mn)	7439-96-5	10
Molybdenum (Mo)	7439-98-7	10
Nickel (Ni)	7440-02-0	50
Potassium (K)	7723-14-0	1000
Selenium (Se)	7782-49-2	50
Silver (Ag)	7440-22-4	2
Sodium (Na)	7440-23-5	100
Thallium (Tl)	7440-28-0	100
Vanadium (V)	7440-62-2	4
Zinc (Zn)	7440-66-6	4

2 METHOD SUMMARY

2.1 A representative 1 gram (wet weight) aliquot of a well-mixed sediment, sludge, solid or soil sample is accurately weighed and digested using the appropriate sample preparation method (Region 9 SOP #405).

2.2 The method describes the multi-elemental determination of trace elements in digestate solutions by ICP-AES using a simultaneous instrument. The instrument measures the characteristic atomic-line emission spectra by optical spectrometry. Samples are nebulized and the resulting aerosol is transported to the plasma torch. Element specific emission spectra are produced by a radio-frequency inductively coupled plasma. The spectra are dispersed by a grating spectrometer, and the intensities of the line spectra are monitored at specific wavelengths by a photosensitive device. Photo currents from the photosensitive device are processed and controlled by a computer system. A background correction technique is required to compensate for variable background contribution to the determination of the analytes. Background must be measured adjacent to the analyte wavelength during analysis.

3 DEFINITIONS

3.1 Analytical Sample - Any solution introduced into the ICP-AES instrument excluding calibration standards, calibration blanks, or instrument performance check samples.

3.2 Calibration Blank (CB) - A volume of reagent water acidified with the same acid matrix as in the calibration standards. The calibration blank is a zero standard and is used to calibrate the ICP-AES instrument.

3.3 Calibration Standard (CAL) - A solution prepared from the dilution of stock standard solutions. The CAL solutions are used to calibrate the instrument response with respect to analyte concentration.

3.4 Instrument Detection Limit (IDL) - The concentration equivalent to the analyte signal which is equal to three times the standard deviation of a series of ten replicate measurements of the calibration blank signal at the same wavelength.

3.5 Instrument Performance Check Solution (IPC) - A solution of method analytes used to evaluate the performance of the instrument system with respect to a defined set of criteria.

3.6 Laboratory Fortified Blank (LFB) - An aliquot of LFB to which known quantities of the method analytes are added. The LFB is analyzed exactly like a sample, and its purpose is to determine whether the methodology is in control and whether the laboratory is capable of making accurate and precise measurements. For this SOP, the LFB also serves as a solid laboratory control sample (LCSS).

3.7 Laboratory Fortified Sample Matrix (LFM) - An aliquot of an analytical sample to which known quantities of the method analyte is added in the laboratory. The LFM is analyzed exactly like a sample, and its purpose is to determine whether the sample matrix contributes bias to the analytical results. The background concentrations of the analyte in the sample matrix must be determined in a separate aliquot and the measured values in the LFM corrected for background concentrations.

3.8 Laboratory Fortified Matrix Duplicate (LFMD) - A duplicate aliquot of an analytical sample to which known quantities of analytes are added in the laboratory. The LFMD is analyzed exactly like a sample, and its purpose is to determine whether the sample matrix contributes bias to the analytical results and to determine laboratory precision. The background concentrations of the analytes in the sample matrix must be determined in a separate aliquot and the measured values in the LFM corrected for background concentrations.

3.9 Laboratory Reagent Blank (LFB) - An aliquot of reagent water, blank sand or other blank matrix that is treated exactly as a sample. The LFB is used to detect sample contamination resulting from the procedures used to prepare and analyze the samples in the laboratory environment.

3.10 Linear Dynamic Range (LDR) - The concentration range over which the instrument response to an analyte is linear.

3.11 Method Detection Limit (MDL) - The minimum concentration of an analyte in an environmental sample that can be identified, measured, and reported with 99% confidence that the analyte concentration is greater than zero.

3.12 Quality Control Sample (QCS) - A solution containing known concentrations of method analytes. The QCS source must be different than the source of calibration standards. It is used to check laboratory or instrument performance.

3.13 Quantitation Limit (QL) - The concentration at which confidence in the reported value requires no qualifying remarks. A standard is run at the QL to verify acceptable data quality.

3.14 Sample Delivery Group (SDG) - A group of twenty samples or less from a project that is sent to the laboratory for analysis.

3.15 Solid Sample - For the purpose of this method, a sample taken from matrices classified as soil, sludge, solid or sediment.

3.16 Spectral Interference Check (SIC) Solution - A solution of selected method analytes of higher concentration which is used to evaluate the procedural routine for correcting known interelement spectral interferences with respect to a defined set of method criteria.

3.17 Stock Standard Solution (SSS) - A concentrated solution containing one or more method analytes prepared in the laboratory using assayed reference materials or purchased from a reputable commercial source.

3.18 Total Recoverable Analyte Concentration - The concentration of analyte in a solid sample after preparation by acid digestion. The sample preparation procedures are described Region 9 SOP #405.

4 HEALTH AND SAFETY

4.1 The toxicity or carcinogenicity of reagents used in this method have not been fully established. Each chemical should be regarded as a potential health hazard and exposure to these compounds should be as low as reasonably achievable. Specifically, concentrated nitric and hydrochloric acids present various hazards and are moderately toxic and extremely irritating to skin and mucus membranes. Use these reagents in a fume hood whenever possible and if eye or skin contact occurs, flush with large amounts of water for at least 15 minutes. Always wear safety glasses or a shield for eye protection, protective clothing and observe proper mixing when working with these reagents.

4.2 The ICP-AES emits radio-frequency and intense UV radiation. Personnel should not stand near the plasma while the ICP is in operation.

4.3 Areas of high, lethal voltages exist within the instrument. Never touch parts of the instrument which are not intended for access by the instrument operator.

5 SAMPLE HANDLING AND PRESERVATION

5.1 Sample handling and preservation procedures are covered in Region 9 SOP #405.

6 INTERFERENCES

6.1 Spectral interferences are caused by background emission from continuous or recombination phenomena, stray light from the line emission of high concentration elements, overlap of a spectral line from another element, or the unresolved overlap of molecular band spectra.

6.1.1 Background emission and stray light can usually be compensated for by subtracting the background emission determined by measurement(s) adjacent to the analyte wavelength peak. The location(s) used for the routine measurements must be free of off-line spectral ±interferences (interelement or molecular) or adequately corrected to reflect the same change in background intensity that occurs at the wavelength peak.

6.1.2 Spectral overlaps can be compensated for by equations that correct for the inter-element contributions, which involves measuring the interfering elements. When present and uncorrected, these interferences will produce false-positive results and be reported as analyte concentrations.

6.1.3 When interelement corrections are applied, there is a need to verify their accuracy by analyzing spectral interference check solutions. Interelement corrections will vary for the same emission line among instruments because of differences in resolution, as determined by the grating plus the entrance and exit slit widths, and by the order of dispersion. Interelement corrections will also vary depending upon the choice of background correction points. Selecting a point where an interfering emission line may appear should be avoided when practical. Interelement corrections that constitute a major portion of an emission signal may not yield accurate data. It should not be forgotten that some samples may contain uncommon elements that could contribute spectral interferences.

6.1.4 The interference effects must be evaluated for each individual instrument. Intensities will vary not only with the optical resolution but also with the operating conditions (such as power, viewing height and argon flow). The Region 9 Laboratory has determined and documented for each wavelength the effect from the known interferences given in Table 1, and utilizes a computer routine for their automatic correction on all analysis. To determine the appropriate location for the off-line background correction, the user must scan the area on either side adjacent to the wavelength and record the apparent emission intensity from all other method analytes. This spectral information must be documented and kept on file. The location selected for background correction must be either free of off-line interelement spectral interference or a computer routine must be used for their automatic correction on all determinations. If a wavelength other than the recommended wavelength is used, the user must determine and document both the on-line and off-line spectral interference effect from all method analytes and provide for their automatic correction on all analyses. Tests to determine the spectral interference must be done using analyte concentrations that will adequately describe the interference. Normally, 100 mg/L single element solutions are sufficient, however, for analytes such as iron that may be found at high concentration a more appropriate test would be to use a concentration near the upper LDR limit.

6.1.5 When interelement corrections are **not** used, the on-going SIC solutions (Sect. 7.3.10) must be analyzed to verify the absence of interelement spectral interference. When the interference accounts for 10% or more of the analyte concentration, another approved test procedure must be used to complete the analysis. Users should be aware that, depending upon the instrumental resolution, alternate wavelengths with adequate sensitivity and freedom from interference may not be available for all matrices. In these circumstances the analyte must be determined using another approved test procedure.

6.2 Physical interferences are effects associated with the sample nebulization and transport processes. Changes in viscosity and surface tension can cause significant inaccuracies, especially in samples that contain high dissolved solids or high acid concentrations. If physical interferences are present, they must be reduced by such means as high solids nebulizer, diluting the sample, and using a

peristaltic pump. Another problem that can occur is salt buildup at the tip of the nebulizer, which affects the aerosol rate and causes instrument drift. This problem can be controlled by a high solids nebulizer, wetting the argon prior to nebulization, using a tip washer, or diluting the sample.

6.3 Chemical interferences include molecular-compound formation, ionization effects, and solute-vaporization effects. Normally, these effects are not significant with the ICP-AES technique. If observed, they can be minimized by careful selection of operating conditions (such as incident power and observation height), by buffering the sample, by matrix matching, and by standard addition procedures. Chemical interferences are highly dependant on matrix type and the specific analyte element.

6.4 Memory Interference - Memory interferences are related to sample transport and result when there is carryover from one sample to the next. Sample carryover can result from sample deposition on the uptake tubing to the nebulizer, and from incomplete rinsing of the sample solution from the plasma torch and the spray chamber between samples. These memory effects are dependent upon both the analyte being measured and sample matrix and are minimized through the use of extended rinse times.

7 APPARATUS AND MATERIALS

7.1 Apparatus

7.1.1 ICP-AES System, comprised of following: Thermo Jarrell Ash Inductively Coupled Plasma-Atomic Emission Spectrometer (ICAP-61E) and Thermo Jarrell Ash Autosampler.
7.1.2 Argon gas supply (high-purity grade, 99.99%).
7.1.3 Pipettors - variable volume, LabIndustries Repipet II, or equivalent, for dispensing reagents and acids.
7.1.4 Pipettes - calibrated fixed volume and digital variable volume, Eppendorf Model 4800, or equivalent, with associated metal-free disposable pipet tips.
7.1.5 Disposable syringes with 0.45um Whatman disk filters.

7.2 Glassware and Incidentals

Note: All reusable labware (glass, quartz, polyethylene, PTFE, FEP, etc.) should be sufficiently clean for the task objectives and isolated from other laboratory glassware. Please refer to Region 9 SOP 130, Glassware Cleaning Procedures, for specific instructions (reference 11.2).

7.2.1 Volumetric Class "A" Flasks - 1000-mL, 500-mL, 200-mL and 100-mL.
7.2.2 Volumetric Class "A" Pipettes - 50-mL, 25-mL, 10-mL and 5-mL.
7.2.3 Plastic or Teflon Wash Bottles.

7.3 Materials and Reagents

Reagents may contain elemental impurities which might affect analytical data. Only high-purity reagents that conform to the American Chemical Society (ACS) specifications should be used. If the purity of a reagent is in question, analyze for contamination. Record all standard and reagent preparations in the Inorganic Standards and Reagents Preparation Log Book (Attachment B).

7.3.1 Reagent water. All references to reagent water in this method refer to ASTM Type II grade water.

7.3.2 Hydrochloric acid, (HCl) concentrated (sp.gr. 1.19) - trace metals grade or better.

7.3.3 Nitric acid, (HNO_3) concentrated (sp.gr. 1.41) - trace metals grade or better.

7.3.4 Standard stock solutions (1000 g/mL) can be purchased from a commercial supplier such as CPI, Spex or Inorganic Ventures. The list of elements required for this method is provided in Section 1.1.

7.3.5 Calibration Standards - Calibration stock standard solutions are purchased from Inorganic Ventures and the final concentrations are listed in Table 2. Each calibration standard is prepared by diluting an appropriate amount of the calibration stock standard to 1000 mL with 2% (v/v) nitric acid/5% (v/v) hydrochloric acid.

7.3.6 Calibration Blank (CB) - Dilute concentrated nitric acid and hydrochloric acid with reagent water to obtain a 2% (v/v) nitric acid/5%(v/v) hydrochloric acid solution.

7.3.7 Rinse Blank - Dilute concentrated nitric acid and hydrochloric acid with reagent water to obtain a 2% (v/v) nitric acid/5% (v/v) hydrochloric acid solution.

7.3.8 Instrument Performance Check (IPC) Solution - The IPC solution is used to verify instrument performance during analysis. The IPC is purchased from Inorganic Ventures and consists of the same solutions used to prepare the calibration standards. The IPC is prepared by adding 2.0 mL each of the three Cal Standard solutions, and 1.0 ml of the 1000ppm individual stock standards of B, Mo, Sn, Ti and Sr and diluting to 200 mL with 2% (v/v) nitric acid/5% (v/v) hydrochloric acid. The concentrations of the IPC are given in Table 3.

7.3.9 Quality Control Sample (QCS) - Analysis of a QCS is required for the initial verification of the calibration standards and instrument performance. The QCS is purchased from Inorganic Ventures and is from a source different from the standard stock solutions and prepared with 2% (v/v) nitric acid/5% (v/v) hydrochloric acid. The concentrations of the QCS standard are given in Table 3.

7.3.10 Spectral Interference Check (SIC) solutions - When interelement corrections are applied, SIC solutions are needed containing concentrations of the interfering elements at levels that will provide an adequate test of the correction factors. The SIC solutions used are 200 mg/L Al, 300 mg/L Fe and 50 mg/L of all other SIC analytes (Exceptions are made for those SIC analytes with LDRs less than 50 mg/L. These shall be prepared at a concentration near the upper LDR). The SIC solutions are prepared by diluting the 1000 g/mL single element stock solutions in 2% (v/v) nitric acid/5%(v/v) hydrochloric acid.

7.3.11 Profile Solution - A solution of 10 mg/L copper and manganese is needed to profile the instrument prior to analysis. The solution is made by diluting 5.0 mL each of 1000 g/mL copper and manganese stock standard to 500 mL with 2% (v/v) nitric acid/5%(v/v) hydrochloric acid.

8 QUALITY CONTROL PROCEDURES

8.1 Method Characterization - Prior to routine use of this method, there must be data available documenting initial demonstration of performance. The required data document the selection criteria of background points, linear dynamic ranges, method detection limits and inter-element correction factors.

8.2 EPA Region 9 Laboratory operates a formal quality control (QC) program. As it relates to this SOP, the QC program consists of an initial demonstration of laboratory capability (refer to Region 9 SOP #880), and the periodic analysis of laboratory solutions as a continuing check on performance.

8.2.1 LDR - The upper limit of the LDR must be established for each element used in quantifying results. Analyze a minimum of three series of standards with concentrations spanning the range from 1 to 100 times the highest calibration standard concentration. The upper concentration factor can be adjusted by the analyst to account for detector characteristics or dissolved solids limitations/restrictions. From the analysis determine the maximum concentration for which the measured and true concentration agree within 10%. This concentration is typically defined as the upper limit of the LDR. Samples with analyte concentrations that are greater than 90% of the upper LDR limit must be diluted and reanalyzed. The LDR is verified every six months or whenever the analytical conditions are changed.

8.2.2 MDL - A method detection limit must be confirmed annually and must be <½ the QL or corrective action must be initiated.

8.2.3 LFB - Analyze a LFB in quadruplicate and take average results to demonstrate initial acceptable performance.

8.2.4 SIC - The laboratory must establish and initially verify an interelemental spectral interference correction routine to be used during sample analysis. Criteria for determining an inter-element spectral interference is the apparent positive or negative concentration on the analyte that is outside limits of the calibration blank for the analyte. Once established the interferences must be verified annually, or whenever there is a change in instrument operating conditions. Only a portion of the correction routine must be verified more frequently or daily. The test criteria and the solutions are as follows:

8.2.4.1 For interferences from aluminum and iron, only those correction factors (positive or negative) when multiplied by 100 which exceed ± ½ the QL are tested daily.

8.2.4.2 For all other interfering elements, only those correction factors (positive or negative) when multiplied by 10 which exceed ± ½ the QL are tested daily.

8.2.4.3 If the correction routine is operating properly, the determined apparent analyte(s) concentration from analysis of each interfering solution should fall within a specific concentration range. The range shall be the greater of either (1) ± ½ the QL or (2) a concentration range that is calculated by multiplying the concentration of the interfering element by the value of the correction factor being tested and dividing by 10. If the apparent analyte concentration is outside the greater of the two ranges, the correction factor should be redetermined and updated prior to sample analysis.

8.2.4.4 If the nature of the samples analyzed is such that they do not contain concentrations of the interfering elements at the 10 mg/L level, daily verification is not required; however, all interelement spectral correction factors must be verified annually, or whenever there is a change in instrument operating conditions.

8.3 Routine Analytical Quality Control

8.3.1 Instrument performance check (IPC) solution - The laboratory must check instrument performance and verify that the instrument is properly calibrated on a continuing basis. To verify calibration, the IPC and the calibration blank are run as routine samples immediately following calibration, after every 10 analytical samples, and at the end of each run. For each analyte in the IPC, the percent recovery is calculated as follows:

$$\%R = \frac{IPC}{s} \times 100$$

where:

%R	=	percent recovery.
IPC	=	measured concentration of analyte in the IPC, mg/L.
s	=	expected analyte concentration in the IPC, mg/L.

8.3.1.2 The QC criteria for initial and continuing IPC samples is ±10%. If the %R for any analyte in the IPC falls outside of the QC criteria analysis must stop. The instrument must be re-calibrated for at least the unacceptable out-of-control analytes. Once an acceptable calibration is obtained, the samples preceding the out-of-control IPC must be re-analyzed for the affected analytes.

8.3.1.3 The results for analytes measured in the CBs analyzed after IPCs are compared to the QL. If any analyte in the initial CB exceeds ½ the QL, the instrument must be recalibrated. Samples cannot be analyzed until an acceptable initial CB is analyzed. If the concentration of any analyte in a continuing CB exceeds ½ the QL, the instrument must be recalibrated

for the out-of-control analytes. Once an acceptable calibration is obtained, the samples preceding the out-of-control CB must be reanalyzed for the affected analytes.

8.3.2 QCS Analysis - The analyte concentrations in a QCS sample must be measured daily. The concentrations of analytes in the QCS are listed in Table 3. The recovery of analytes in the QCS is calculated as follows:

$$\%R = \frac{C_m}{C_t} \times 100$$

Where

$\%R$	=	relative percent recovery.
C_m	=	measured analyte concentration in the QCS, mg/L.
C_t	=	true analyte concentration in the QCS, mg/L.

The recovery must be within 90-110% or the analyses must be terminated. The cause of the poor recovery must be determined and the problem corrected. The instrument must be re-calibrated and all affected samples must be re-analyzed. If, after re-calibration, the QCS recovery still exceeds the 90-110% limits, the calibration standards and QCS standard must be re-prepared and the instrument re-calibrated.

8.3.3 QL - The accuracy of the calibration at the quantitation limit shall be verified by the analysis of a QL standard. The QL must be analyzed at the beginning of each analytical run, immediately after the QCS. The recovery of analytes in the QL is calculated as follows:

$$\%R = \frac{M}{T} \times 100$$

Where

$\%R$	=	percent recovery of the standard.
M	=	measured concentration of the analyte, mg/L.
T	=	true concentration of the analyte in the QL, mg/L.

If the QL recovery exceeds the limits of 50 - 150%, the analysis shall be terminated. The cause of the poor recovery must be determined and the problem corrected. The instrument must be recalibrated and all affected samples must be reanalyzed. If, after re-calibration, the QL recovery still exceeds the 50-150% limits, the calibration standards must be re-prepared and the instrument re-calibrated.

8.3.4 SIC - Analyze daily SIC solutions to test interelemental spectral correction factors. If the SIC solutions do not meet the test criteria given in Section 8.2.4, the factor must be updated before

samples are analyzed. If the affected samples do not contain concentrations of the interfering elements at the 10 mg/L level, daily verification is not required. If the affected samples contain concentrations of analyte at less than ½ the QL, daily verification is not required. If the corrected concentration of the analyte due to spectral interference is less than 10% the total analyte concentration, daily verification is not required.

8.3.5 LRB - The laboratory must analyze at least one LRB with each batch of 20 or fewer samples of the same matrix. LRB data are used to assess contamination from the laboratory environment and sample preparation reagents. LRB values that exceed the QL indicate potential laboratory or reagent contamination. If the potential contamination significantly impacts the analytical results, the LRB must be re-prepared along with the affected samples, and the affected analytes re-analyzed. Unless specified otherwise by project DQOs, the following statements describe when samples must be re-prepared:

1) If the LRB analyte concentration is ≥ the QL and the sample result is less than 5 times the LRB analyte concentration, the LRB and sample must be re-prepared and re-analyzed.

8.3.6 LFB - The laboratory must analyze at least one LFB (Section 3.6) with each batch of 20 or fewer samples of the same matrix. Calculate the percent recovery for each analyte using the following equation:

$$\%R = \frac{LFB}{s} \times 100$$

where:

%R	=	percent recovery.
LFB	=	measured concentration of analyte in the LFB, mg/L.
s	=	analyte concentration in the LFB, mg/L.

If the recovery falls outside the manufacturer's acceptance limits, re-analyze once. If the recovery still falls outside the manufacturer's acceptance limits upon re-analysis, the analyte is judged to be out- of-control, and the source of the problem must be identified and resolved. All samples associated with the out-of-control LFB must be re-prepared and re-analyzed.

8.3.7 LFM - Sample homogeneity and the chemical nature of the sample matrix can affect analyte recovery and the quality of the data. LFM results can be used to assess these matrix effects and potential impact to data usability. One LFM must be prepared for every 20 routine samples of the same matrix in a sample batch. Calculate the percent recovery for each analyte using the following equation:

$$\%R = \frac{Clfm - C}{s} \times 100$$

where:

$\%R$	=	percent recovery.
C_{lfm}	=	measured concentration of analyte in the LFM, corrected for sample preparation and any dilutions, mg/L.
C	=	measured concentration of analyte in the routine sample corrected for sample preparation and any dilutions, mg/L.
s	=	analyte concentration in the LFM, corrected for sample preparation and any dilutions, mg/L.

If the value of C is less than 4 times the value of s, the acceptance window for $\%R$ is 75-125%. If the recovery of analyte falls outside the acceptance window other QC data must be examined to determine if a matrix problem exists. If the laboratory performance is in control (i.e., the IPC, QL, QCS, and LFB results are acceptable), the poor LFM recovery is most likely matrix-related. The affected analyte result must be flagged as estimated (J) on the analytical spreadsheet and a comment added on the spreadsheet and report narrative informing the data user that matrix effects may be present in samples of similar composition.

8.3.8 LFMD - Sample homogeneity can affect the quality and interpretation of the data. LFMD results can be used to assess sample homogeneity. One LFMD must be prepared for every 20 routine samples of the same matrix in a sample batch. Calculate the relative percent difference using the following equation:

$$\%RPD = \frac{|Clfmd - Clfm|}{(Clfmd + Clfm)/2} \times 100$$

Where

$\%RPD$	=	relative percent difference.
C_{lfm}	=	measured concentration in the LFM corrected for sample preparation and any dilutions, mg/L.
C_{lfmd}	=	measured concentration in the LFMD corrected for sample preparation and any dilutions, mg/L.

If the recovery of analyte falls outside the acceptance window other QC data must be examined to determine if a matrix problem exists. If the laboratory performance is in control (i.e., the IPC, QL, QCS, and LFB results are acceptable), the poor LFMD recovery is most likely matrix-related. The affected analyte result must be flagged as estimated (J) on the analytical spreadsheet

and a comment added on the spreadsheet and report narrative informing the data user that matrix effects may be present in samples of similar composition.

The relative percent difference (RPD) between the LFM and LFMD must be $\leq$20%. If the control limits are exceeded, the affected analyte result must be flagged as estimated (J) on the analytical spreadsheet and a comment added on the spreadsheet and report narrative informing the data user that sample imprecision may be present in samples of similar composition.

9 ANALYTICAL PROCEDURES

9.1 Calibration and Analysis

9.1.1 Instrument Set-up - Check the condition of the pump tubing for wear. Replace as needed. Tighten the pump tubing on the pump. Ignite the plasma and allow to stabilize for at least 30 minutes. During instrument warm up, observe the nebulizer and spray chamber for proper nebulization. Check torch for salt build up. Verify that the drain tubing is tight and check the waste container.

9.1.2 Select the appropriate method file and change the data file name to correspond to the correct day (i.e.; 10101221, indicating ICP instrument number (1), present date (year/month/day), and analytical run number(1)). Check the flush times and change to desired time, minimally 60 seconds. Save all changes.

9.1.3 Set up the autosampler table with the desired sample run. Old autosampler files may be written over and re-saved. Print the autosampler file and place the standards and samples in the racks as indicated by autosampler file and enter into the Run Log (Attachment C).

9.1.4 The Profile procedure is to align the optical path of the instrument prior to calibration and sample analysis. Profile the instrument using the 10 mg/L Cu/Mn solution (Section 7.3.11). Aspirate the profile solution and run the profile routine as per the manufacturer's procedure. Adjust the profile position with the profile adjustment knob. Repeat the procedure until the profile peak position is $\pm$0.05 as indicated by the profile plot observed on the computer monitor. Print the acceptable profile plot.

9.1.5 Calibration - A calibration blank and two mixed calibration standards (7.2.7) are presently used for calibration. The calibration standards are given in Table 2. The calibration is automatically updated in the method file as they are run.

9.1.6 Sample Analysis - After calibration the autosampler continues with the samples and QC. Load SIC solutions according to the requested analyte list. An example of a loading list for an analytical run sequence is listed in the table below:

Seq.	Desc.	Seq.	Desc.	Seq.	Desc.	Seq.	Desc.
1	IPC	13	IPC	25	IPC	37	IPC
2	CB	14	CB	26	CB	38	CB
3	QCS	15	Ti SIC	27	S7	39	S17
4	QL	16	Mo SIC	28	S8	40	S18
5	Fe SIC	17	LRB	29	S9	41	S19
6	Al SIC	18	LFB	30	S10	42	S20
7	V SIC	19	S1	31	S11	43	S20-LFM
8	Mn SIC	20	S2	32	S12	44	S20-LFMD
9	Cr SIC	21	S3	33	S13	45	IPC
10	Co SIC	22	S4	34	S14	46	CB
11	Ni SIC	23	S5	35	S15	47	
12	Cu SIC	24	S6	36	S16	48	

9.1.7 Review results for QC compliance and off-scale results. Identify samples which must be re-analyzed in a different analytical run. Samples having analytes at concentrations higher than 90% of the linear dynamic range must be diluted into range and re-analyzed.

9.2 Data Reduction and Reporting - After set-up and calibration the TJA ICAP-61E software reports results for the analyzed solution in units of mg/L. Solid samples should be reported using the following equation:

$$R = \frac{Mx(0.2L)xD}{(W)x(1Kg/1000g)x(\%solids/100)}$$

where:

R	=	final reported concentration, in mg/Kg.
M	=	measured concentration reported by instrument, in mg/L.
D	=	dilution factor, to account for dilution performed after sample preparation.
W	=	Weight of sample, in grams.

The concentrations reported by the instrument must be corrected for any dilutions performed as part of the sample preparation or analysis process. All results should be reported using no more

than two significant figures; however, no values of less significance than the QL may be reported (values near the QL will be reported with only one significant figure). Report down to ½ the QL. Values between ½ the QL and the QL will be flagged as estimated (J flag). For rounding results, adhere to the following rules:

a) If the number following those to be retained is less than 5, round down;
b) If the number following those to be retained is greater than 5, round up; or
c) If the number following the last digit to be retained is equal to 5, round down if the digit is even, or round up if the digit is odd.

10 DOCUMENTATION

10.1 Acid Digestion Log for Metals Preparation - Entries are made for the case number, SDG number, date of preparation, date of completion, site name, QC solution IDs, analyst initials, lab sample IDs, client sample IDs, initial aliquot volume or weight, pH of sample (if applicable), concentration and volume of added acids and final volume of digestate. A copy of the acid digestion log for metals digestion must be submitted with the raw data. The digestion log is maintained in Room 302. (Attachment C)

10.2 MET-1 TJA ICAP 61E Run Log - Entries are made for the case number, SDG number, date of analysis, site name, file name, analyst initials, lab sample IDs, client sample IDs, and comments, if any. The run log is maintained in Room 303. (Attachment D)

10.3 Inorganic Standards and Reagents Preparation Log Book - Copies of all standard solution preparation entries (CAL, IPC, QCS, QL, SIC, LFM, LFMD, etc.) must be submitted with each data package. (Attachment B)

10.4 ESAT Region 9 Laboratory Solids Determination Log - Copies of all solids determination entries must be submitted along with the calculated dry weight with each data package.

10.5 Report Narrative and Deliverable

The data package consists of the report narrative, reports, and data, as listed in the table below.

Data Package Contents
Report Narrative: Discusses any problems encountered, both technical and administrative, the corrective action taken, and the resolution. All universal analytical flags should also be discussed in the report narrative.
Tabulated sample results on an analytical spreadsheet, with units, sample collection dates, client sample IDs, laboratory IDs and station locations. (Attachment E)
LRB data included on the analytical spreadsheet. (Attachment E)
LFM and LFM duplicate results on a QC summary report with calculated relative percent difference (RPD). (Attachment F)
LFM, LFM duplicate and LFB results on a QC summary report with calculated percent recoveries (%R). (Attachment F)
Raw sample, standard and QC data, including run logs and any work sheets, if applicable. (Attachments B, C and D)

11 REFERENCES

11.1 U.S. Environmental Protection Agency, Office of Solid Waste and Emergency Response. Method 3050B, Acid Digestion of Sediments, Sludges, and Soils, Revision 2, December 1996.

11.2 U.S. Environmental Protection Agency, Office of Solid Waste and Emergency Response. Method 6010B, Inductively Coupled Plasma - Atomic Emission Spectrometry, Revision 2, December 1996.

11.3 Test Methods for Evaluating Solid Waste, Physical/Chemical Methods, 3rd ed.; U.S. Environmental Protection Agency, Office of Solid Waste and Emergency Response. U.S. Government Printing Office: Washington, DC, 1996; SW-846.

11.4 Region 9 SOP 405, *Preparation of Solid Samples for GFAA and ICP-AES Analysis.*

11.5 Region 9 SOP 125, *Sample Disposal.*

11.6 Region 9 SOP 130, *Glassware Cleaning Procedures.*

11.7 Region 9 SOP 840, *Notebook Documentation and Control.*

11.8 Region 9 SOP 880, *Demonstration of Laboratory Capability and Analyst Proficiency.*

Table 1 - Method Analytes and Potential Interfering Elements

Analyte	Wavelength - nm	Interfering Elements
Al	308.215	Mn, Mo, Ti, V, Fe
Sb	206.838	Cr, Mo, Ni, Ti, V, Sn, Zn
As	193.696	Al, Cr, Fe, Ti, V
Ba	493.409*	Fe
Be	313.042	Mo, Ti, V
B	249.678	Fe, Ni, Co
Cd	226.502	Co, Fe, Mo, Ti, Ni
Ca	317.933	Mn, Mo, Ti, V, Cr
Cr	267.716	Cd, Mn, Mo, Ti, V
Co	228.616	Cd, Cr, Ba, Mo, Ti, Ni, Fe
Cu	324.754	Mo, Ti, V, Fe
Fe	259.940	Mn, Mo, V
Pb	220.353	Al, Co, Fe, Mo, Ni, Ti
Mg	279.079	Co, Cr, Mn, Mo, Ti, V
Mn	257.610	Al, Mo, V
Mo	202.030	Fe
Ni	231.604	Tl, Sb
K	766.491	None
Se	196.026	Co
Ag	328.068	Mn, Mo, Ti, V
Na	588.995	None
Sr	421.553*	None
Tl	190.894	Co, Fe, Mo, V
Sn	189.989	Ti
Ti	334.941	Co, Cr
V	292.402	Cr, Fe, Mn, Mo, Ti
Zn	213.856	Co, Cu, Mo, Ni, Ti, V, Fe

* Wavelengths other than those recommended by Method 6010B.

Table 2 - Current Calibration Standard Concentrations*

Analyte	Solution	Concentration mg/L	Analyte	Solution	Concentration mg/L
Al	S1	20.0	Ag	S1	2.5
Sb	S1	10.0	Na	S1	50.0
As	S1	10.0	Tl	S1	10.0
Ba	S1	2.0	V	S1	5.0
Cd	S1	5.0	Zn	S1	5.0
Ca	S1	50.0	B	S2	5.0
Cr	S1	2.0	Mo	S2	5.0
Co	S1	5.0	Sr	S2	5.0
Cu	S1	2.5	Sn	S2	5.0
Fe	S1	10.0	Ti	S2	5.0
Pb	S1	10.0			
Mg	S1	50.0			
Mn	S1	5.0			
Ni	S1	5.0			
K	S1	50.0			
Se	S1	10.0			

* Stock standard solutions are purchased as concentrated solutions and diluted by a factor of 100 to prepare the calibration standards. B, Mo, Sr, Sn and Ti are prepared with appropriate dilutions from 1000 g/mL single element stock standard solutions. Additional calibration standards can be prepared from 1000 g/mL or 10,000 g/mL single element stock standard solutions as needed.

Table 3 - IPC, QCS, LFM/LFMD Concentrations

Analyte	IPC - mg/L	QCS - mg/L	LFM/LFMD - mg/L
Al	4.0	2.0	0.5
Sb	2.0	1.0	2.0
As	2.0	1.0	2.0
Ba	4.0	2.0	2.0
Be	0.1	0.05	0.05
B	1.0	0.5	2.0
Cd	1.0	0.5	0.05
Ca	10.0	5.0	10.0
Cr	0.4	0.2	0.2
Co	1.0	0.5	0.50
Cu	0.5	0.25	0.25
Fe	2.0	1.0	1.0
Pb	2.0	1.0	0.5
Mg	10.0	5.0	10.0
Mn	1.0	0.5	0.50
Mo	1.0	0.5	0.50
Ni	1.0	0.5	0.50
K	10.0	5.0	10.0
Se	2.0	1.0	2.0
Ag	0.5	0.25	0.05
Na	10.0	5.0	10.0
Sr	1.0	0.5	N/A
Tl	2.0	1.0	2.0
Sn	1.0	0.5	N/A
Ti	1.0	0.5	N/A
V	1.0	0.5	0.50
Zn	1.0	0.5	0.50

Attachment A:
Deviations From Reference Method 6010B

A.1 The following differences in nomenclature from Method 6010B are used at Region 9: IPC for CCV, QCS for ICV, SIC for ICS and LFB for LCS.

A.2 The scope of this SOP does not include the digestion of solid samples.

A.3 Calibration blank acceptance criteria was changed to ½ the QL.

A.4 SIC acceptance criteria was changed to ½ the QL.

A.5 The minimum concentration of interfering element considered to be significant was changed to 10 mg/L instead of ± one reporting limit from zero.

A.6 SICs will be calculated annually, or whenever there is a change in instrument operating conditions, rather than every six months.

Attachment G:

CURRENT 6010B IEC 08/31/00
(Table exp 06/20/01)

ALUMINUM
QL - 1.000 mg/L

Affecting Elem	Factor	QC Limits	Daily Y/N	Date Determined
Fe	-.000104		N	06/20/00
Mn	.000724		N	06/20/00
Mo	.018		N	06/20/00
Ti	-.000174		N	06/20/00
V	.01433		N	06/20/00

ANTIMONY
QL - 0.100 mg/L

Affecting Elem	Factor	QC Limits	Daily Y/N	Date Determined
Cr	.012507	**+/-.063**	Y	06/20/00
Mo	.004045		N	06/20/00
Ni	-.002389		N	06/20/00
Sn	-.01489	**+/-.074**	Y	06/20/00
Ti	.000999		N	06/20/00
V	-.007536	**+/-.050**	Y	06/20/00
Zn	-.000379		N	06/20/00

ARSENIC
QL - 0.250 mg/L

Affecting Elem	Factor	QC Limits	Daily Y/N	Date Determined
Al	.004282	**+/-.125**	Y	06/20/00
Cr	.001509		N	06/20/00
Fe	.000433		N	06/20/00
Ti	.000816		N	06/20/00
V	.016552	**+/-0.125**	Y	06/20/00

BARIUM
QL 0.050 mg/L

Affecting Elem	Factor	QC Limits	Daily Y/N	Date Determined
Fe	.000004		N	06/20/00

BERYLLIUM
QL - 0.001 mg/L

Affecting Elem	Factor	QC Limits	Daily Y/N	Date Determined
Mo	-.000044		N	06/20/00
Ti	.00001		N	06/20/00
V	-.000964	**+/-.0039**	Y	06/20/00

BORON
QL - 0.100 mg/L

Affecting Elem	Factor	QC Limits	Daily Y/N	Date Determined
Co	-.000256		N	06/20/00
Fe	.001797	**+/-.054**	Y	06/20/00
Ni	.00135		N	06/20/00

CADMIUM
QL - 0.005 mg/L

Affecting Elem	Factor	QC Limits	Daily Y/N	Date Determined
Co	.000112		N	06/20/00
Fe	.000104	**+/-.0031**	Y	06/20/00
Mo	.000088		N	06/20/00
Ni	-.000106		N	06/20/00
Ti	.000147		N	06/20/00

CALCIUM
QL - 0.500 mg/L

Affecting Elem	Factor	QC Limits	Daily Y/N	Date Determined
Cr	.000558		N	06/20/00
Mn	.000134		N	06/20/00
Mo	.000261		N	06/20/00
Ti	.000093		N	06/20/00
V	.000483		N	06/20/00

CHROMIUM
QL - 0.010 mg/L

Affecting Elem	Factor	QC Limits	Daily Y/N	Date Determined
Cd	-.000401		N	06/20/00
Mn	.000225		N	06/20/00
Mo	.00019		N	06/20/00
Ti	.000053		N	06/20/00
V	-.00131	**+/-.0052**	Y	06/20/00

COBALT
QL - 0.020 mg/L

Affecting Elem	Factor	QC Limits	Daily Y/N	Date Determined
Ba	-.000352		N	06/20/00
Cd	.000251		N	06/20/00
Cr	.000139		N	06/20/00
Fe	.000045		N	06/20/00
Mo	.000174		N	06/20/00
Ni	.000296		N	06/20/00
Ti	.001728	**+/-0.010**	Y	06/20/00

COPPER
QL - 0.020 mg/L

Affecting Elem	Factor	QC Limits	Daily Y/N	Date Determined
Fe	.000017		N	06/20/00
Mo	.000343		N	06/20/00
Ti	-.000463		N	06/20/00
V	-.00029		N	06/20/00

IRON
QL - 1.000 mg/L

Affecting Elem	Factor	QC Limits	Daily Y/N	Date Determined
Mn	-.003035		N	06/20/00
Mo	-.000351		N	06/20/00

LEAD
QL - 0.150 mg/L

Affecting Elem	Factor	QC Limits	Daily Y/N	Date Determined
Al	.000894	**+/-.075**	Y	06/20/00
Co	-.002368		N	06/20/00
Fe	.000124		N	06/20/00
Mo	.0001095		N	06/20/00
Ni	.000397		N	06/20/00
Ti	.000554		N	06/20/00

MAGNESIUM
QL - 0.500 mg/L

Affecting Elem	Factor	QC Limits	Daily Y/N	Date Determined
Co	-.000749		N	06/20/00
Cr	-.000611		N	06/20/00
Mn	-.004926		N	06/20/00
Mo	-.032707	**+/-.250**	Y	06/20/00
Ti	-.004694		N	06/20/00
Ti	-.000263		N	06/20/00

MANGANESE
QL -0.050 mg/L

Affecting Elem	Factor	QC Limits	Daily Y/N	Date Determined
Al	.00001		N	06/20/00
Mo	-.000117		N	06/20/00
V	-.000138		N	06/20/00

MOLYBDENUM
QL - 0.050 mg/L

Affecting Elem	Factor	QC Limits	Daily Y/N	Date Determined
Fe	-.000044		N	06/20/00

NICKEL
QL -0.050 mg/L

Affecting Elem	Factor	QC Limits	Daily Y/N	Date Determined
Sb	-.000954		N	06/20/00
Tl	-.000411		N	06/20/00

SELENIUM
QL -0.250 mg/L

Affecting Elem	Factor	QC Limits	Daily Y/N	Date Determined
Co	.000892		N	06/20/00

SILVER
QL -0.010 mg/L

Affecting Elem	Factor	QC Limits	Daily Y/N	Date Determined
Mn	000048		N	06/20/00
Mo	-.000312		N	N
Ti	-.000051		N	06/20/00
V	-.003692	+/-.015	Y	06/20/00

SILVER
QL -0.010 mg/L

Mo	-.000312		N	06/20/00
Ti	-.000051		N	06/20/00
V	-.003692	**+/-.015**	Y	06/20/00

THALLIUM
QL -0.500 mg/L

Affecting Elem	Factor	QC Limits	Daily Y/N	Date Determined
Co	-.004901		N	06/20/00
Fe	.000815		N	06/20/00
Mo	-.016425		N	06/20/00
V	.0026		N	06/20/00

TIN
QL - 0.100 mg/L

Affecting Elem	Factor	QC Limits	Daily Y/N	Date Determined
Ti	-.0268	N/A	Y	06/20/00

TITANIUM
MDL -0.010 mg/L

Affecting Elem	Factor	QC Limits	Daily Y/N	Date Determined
Cr	.000232		N	06/20/00
Co	.000014		N	06/20/00

VANADIUM
QL -0.020 mg/L

Affecting Elem	Factor	QC Limits	Daily Y/N	Date Determined
Cr	.000167		N	06/20/00
Fe	.000088		N	06/20/00
Mn	-.00007		N	06/20/00
Mo	-.012259	**+/-.061**	Y	06/20/00
Ti	.000589		N	06/20/00

ZINC
QL -0.020 mg/L

Affecting Elem	Factor	QC Limits	Daily Y/N	Date Determined
Co	-.000063		N	06/20/00
Cu	.002248	**+/-.011**	Y	06/20/00
Fe	.000076		N	06/20/00
Mo	-.000065		N	06/20/00
Ni	.004131	**+/-.021**	Y	06/20/00
Ti	.000131		N	06/20/00
V	.000068		N	06/20/00

The test to see if ICS must be run daily is as follows: For Al and Fe, multiply the IEC factor by 100 and compare to ½ the QL. For all others, multiply by 10 and compare to ½ the QL. All factors that exceed ½ the QL after the multiplication must be tested daily.

Al, Fe, Cr, Cu, Fe, Mo, Ni, Sn, Ti and V IECs must be tested daily and are presented in bold. Al and Sn may be mixed, as no common interferences occur with these two elements. Fe and Cr may be mixed, though As, Co and V have commom interferences with these two interferents, they do not require daily testing. The other ICS solutions shall be run individually. The concentration of Fe is 300ppm. the concentration of Al is 200ppm. The concentrations for all others are 50ppm (V is limited to 40ppm due to linear range constraints).

Acceptance criteria is the greater of (1) +/- ½ the QL or (2) a range found by multiplying the factor by the concentration of the ICS and dividing by 10.

USEPA REGION 9 LABORATORY
RICHMOND, CALIFORNIA

STANDARD OPERATING PROCEDURE 405

PREPARATION OF SOLID SAMPLES FOR GFAA AND ICP-AES ANALYSIS

Prepared by:

_____ _____
Osellie Salvador, ESAT Region 9, ICF Consulting Date

Review by:

_____ _____
Richard Bauer, Chemistry Team Leader Date

Approved by:

_____ _____
Brenda Bettencourt, Laboratory Director Date

Periodic Review:

Signature	Title	Date

STANDARD OPERATING PROCEDURE 405

PREPARATION OF SOLID SAMPLES FOR GFAA AND ICP-AES ANALYSIS

This SOP was prepared by ICF Consulting for the United States Environmental Protection Agency (USEPA) under the Environmental Services Assistance Team (ESAT) contract (EPA contract No. 68-W-01-028).

APPROVED BY:

Osellie Salvador, Inorganic Group Leader	Date
Surender Kaushik, QA Task Manager	Date
Jerry Vail, ESAT Program Manager	Date

ESAT Document Control Number: B0101000-0375

CONTENTS

1 SCOPE AND APPLICATION 4

2 METHOD SUMMARY 5

3 DEFINITIONS 5

4 HEALTH AND SAFETY 6

5 SAMPLE HANDLING AND PRESERVATION 7

6 INTERFERENCES 7

7 APPARATUS AND MATERIALS 7

8 QUALITY CONTROL PROCEDURES 9

9 ANALYTICAL PROCEDURES 10

10 DOCUMENTATION 14

11 REFERENCES 14

Attachment A - Deviations from Reference Method (EPA 3050B)

Attachment B - Acid Digestion Log for Metals Preparation

Attachment C - Inorganic Standards and Reagents Preparation Log Book

1 SCOPE AND APPLICATION

1.1 This method provides two separate sample preparation procedures, one for the preparation of sediment, sludge and soil samples for analysis by Graphite Furnace Atomic Absorption (GFAA) and one for the preparation of sediment, sludge and soil samples for analysis by Inductively Coupled Plasma - Atomic Emission Spectrometry (ICP-AES). The analyses of samples prepared in this method is detailed in Region 9 SOPs 503 and 513. This SOP is based on EPA Method 3050B and is applicable for the following analytes:

Analyte	Chemical Abstract Services Registry Number (CASRN)
Aluminum (Al)	7429-90-5
Antimony (Sb)	7440-36-0
Arsenic (As)	7440-38-2
Barium (Ba)	7440-39-3
Beryllium (Be)	7440-41-7
Boron (B)	7440-42-8
Cadmium (Cd)	7440-43-9
Calcium (Ca)	7440-70-2
Chromium (Cr)	7440-47-3
Cobalt (Co)	7440-48-4
Copper (Cu)	7440-50-8
Iron (Fe)	7439-89-6
Lead (Pb)	7439-92-1
Magnesium (Mg)	7439-95-4
Manganese (Mn)	7439-96-5
Molybdenum (Mo)	7439-98-7
Nickel (Ni)	7440-02-0
Potassium (K)	7723-14-0
Selenium (Se)	7782-49-2
Silver (Ag)	7440-22-4
Sodium (Na)	7440-23-5
Strontium (Sr)	7440-28-6
Thallium (Tl)	7440-28-0
Tin (Sn)	7440-31-5
Vanadium (V)	7440-62-2

Zinc (Zn) 7440-66-6

1.2 This method is not a **total** digestion technique for most samples. It is a very strong acid digestion that will dissolve almost all elements that could become "environmentally available." By design, elements bound in silicate structures are not normally dissolved by this procedure as they are not usually mobile in the environment. If absolute total digestion is required use Method 3052.

2 METHOD SUMMARY

2.1 For the digestion of solid samples, a representative 1 gram (wet weight) sample is digested with repeated additions of nitric acid (HNO_3) and hydrogen peroxide (H_2O_2).

2.2 For GFAA analysis, the resultant digestate is reduced in volume while heating and then diluted to a final volume of 200 mL. The digestate is analyzed using the Perkin-Elmer 5100 graphite furnace atomic absorption spectrophotometer and is detailed in Region 9 SOP 513.

2.3 For ICP-AES analysis, hydrochloric acid (HCl) is added to the initial digestate and the sample is refluxed and then diluted to a final volume of 200 mL. The digestate is analyzed using the Thermo Jarrell Ash ICP-61E atomic emission spectrophotometer and is detailed in Region 9 SOP 503.

2.4 A separate sample aliquot shall be dried for a total percent solids determination.

3 DEFINITIONS

3.1 Analytical Sample - Any sample in which metals are being determined, excluding standards, method blanks, or QC reference samples.

3.2 Field Duplicates (FD) - Two separate samples collected at the same time and placed under identical circumstances and treated exactly the same throughout field and laboratory procedures. Analyses of field duplicates indicate the precision associated with sample collection and storage as well as with laboratory procedures.

3.3 Laboratory Fortified Blank (LFB) - An aliquot of a characterized solid matrix with the elements of interest, or alternatively, an aliquot of blank matrix to which known quantities of the elements of interest are added in the laboratory. The LFB is analyzed exactly like a sample, and its purpose is to determine whether the methodology is in control, and whether the laboratory is capable of making accurate and precise measurements. For this SOP, the LFB also serves as a solid laboratory control sample (LCSS).

7.1.1 Environmental Express Hot Block Digestion apparatus, 36-place or 54-place, or equivalent.
7.1.2 Analytical balance capable of weighing to the nearest 0.01 g.
7.1.3 Pipettors - variable volume, LabIndustries Repipet II, or equivalent, for dispensing reagents and acids.
7.1.4 Pipettes - calibrated fixed volume and digital variable volume, Eppendorf Model 4800, or equivalent, with appropriate plastic tips.
7.1.5 Polycarbonate racks.

7.2 Glassware and Incidentals

7.2.1 Volumetric Class "A" Flasks - 1000-mL, 500-mL, 200-mL and 100-mL.
7.2.2 Volumetric Class "A" Pipettes - 50-mL, 25-mL, 10-mL and 5-mL.
7.2.3 100-mL plastic graduated cylinders.
7.2.4 250-mL LDPE bottles with screw caps, ESS part #0250-1010, or equivalent.
7.2.5 Plastic powder funnels.
7.2.6 Whatman 41 filter paper.
7.2.7 Plastic or Teflon Wash Bottles.
7.2.8 50-mL polypropylene digestion vessel, Environmental Express part #SC499, or equivalent.
7.2.9 Class "S" weights.
7.2.10 Polypropylene watch glasses, Environmental Express part #SC505, or equivalent.
7.2.11 Stainless steel or Teflon spatulas.

7.3 Materials and Reagents

Reagents may contain elemental impurities which might affect analytical data. Only high-purity reagents that conform to the American Chemical Society (ACS) specifications should be used. If the purity of a reagent is in question, analyze for contamination. Record all standard and reagent preparations in the Inorganic Standards and Reagents Preparation Log Book (Attachment B).

7.3.1 Reagent water - All references to reagent water in this method refer to ASTM Type II grade water.

7.3.2 Nitric Acid (HNO_3), concentrated, ACS Reagent Grade or better, suitable for trace metals analysis.

7.3.3 Hydrochloric Acid (HCl), concentrated, ACS Reagent Grade or better, suitable for trace metals analysis.

Note: Concentrated nitric and hydrochloric acids present various hazards and according to MSDS may be fatal and extremely irritating to skin and mucus membranes. Use these reagents in a fume hood. The use of heavy gloves is recommended when working with hydrochloric acid.

7.3.4 Nitric acid (1+1) - Add 1000 mL concentrated HNO_3 (7.3.2) to 800 mL reagent water and dilute to 2L. Store in a clean glass 2.5L bottle.

7.3.5 30% Hydrogen Peroxide (H_2O_2) - ACS Reagent Grade or better, suitable for trace metals analysis.

7.3.6 Standard stock solutions can be purchased from a reputable supplier such as JTBaker, Spex or Inorganic Ventures. These solutions (usually made at concentrations of 1000 *ug*/mL or 10,000 *ug*/mL) have a shelf life of one year and come with NIST-traceable documentation. The use of these standards is the most convenient and time-saving approach.

7.3.6.1 Arsenic - 1000 *ug*/mL ICP Standard, Inorganic Ventures, Spex, CPI or equivalent.
7.3.6.2 Lead - 1000 *ug*/mL ICP Standard, Inorganic Ventures, Spex, CPI or equivalent.
7.3.6.3 Selenium - 1000 *ug*/mL ICP Standard, Inorganic Ventures, Spex, CPI or equivalent.
7.3.6.4 Thallium - 1000 *ug*/mL ICP Standard, Inorganic Ventures, Spex, CPI or equivalent.
7.3.6.5 Boron - 10,000 *ug*/mL ICP Standard, Inorganic Ventures, Spex, CPI or equivalent.
7.3.6.6 Molybdenum - 1000 *ug*/mL ICP Standard, Inorganic Ventures, Spex, CPI or equivalent.

7.3.7 Cation Spiking Solution, 5000 *ug*/mL each calcium, magnesium, potassium and sodium, CPI part #4400-ICAL1-100 or equivalent.

7.3.8 Soil Spike Concentrate Solution, 2000 *ug*/mL each aluminum, arsenic, barium, selenium, thallium, 1000 *ug*/mL iron, 500 *ug*/mL each antimony, cobalt, lead, manganese, nickel, vanadium, zinc, 250 *ug*/mL copper, 200 *ug*/mL chromium, 50 *ug*/mL each beryllium, cadmium, silver, Inorganic Ventures part #CLPP-SPK-SET or equivalent.

7.3.9 GFAA Laboratory Fortified Matrix spiking solution - Pipet 0.40 mL each of arsenic (7.3.6.1), lead (7.3.6.2), selenium (7.3.6.3) and thallium (7.3.6.4) into 50 mL reagent water, add 2.0 mL of nitric acid (7.3.2) and dilute to 100 mL with reagent water. The concentration of this spiking solution is 4.0 mg/L arsenic, lead, selenium and thallium. Addition of 2.0 mL of this spiking solution to 1 gram of soil sample and dilution to the final volume of 200 mL will produce a LFM of 40 *ug*/L arsenic, lead, selenium and thallium in the digestate.

7.3.10 ICP-AES Laboratory Fortified Matrix spiking solution - Pipet 10 mL soil spike concentrate (7.3.8), 20 mL of cation spiking solution (7.3.7), 5.0 mL of molybdenum (7.3.6.6) and 2.0 mL

boron into 10.0 mL reagent water, add 2.0 mL of nitric acid (7.3.2) and dilute to 100 mL with reagent water. The concentration of this spiking solution is 1000 mg/L calcium, magnesium, potassium, sodium, 200 mg/L aluminum, arsenic, barium, boron, selenium, thallium, 100 mg/L iron, 50 mg/L antimony, cobalt, lead, manganese, molybdenum, nickel, vanadium, zinc, 25 mg/L copper, 20 mg/L chromium, and 5.0 mg/L beryllium, cadmium, silver. Addition of 2.0 mL of this spiking solution to 1 gram of soil sample and dilution to the final volume of 200 mL will produce a LFM of 10.0 mg/L calcium, magnesium, potassium, sodium, 2.0 mg/L aluminum, arsenic, barium, boron, selenium, thallium, 1.0 mg/L iron, 0.50 mg/L antimony, cobalt, lead, manganese, molybdenum, nickel, vanadium, zinc, 0.25 mg/L copper, 0.20 mg/L chromium, and 0.05 mg/L beryllium, cadmium, silver.

7.3.11 Solid Laboratory Control Sample - Order a solid laboratory control sample from a manufacturer such as E.R.A. or the QATS contractor. This solid should have concentrations of arsenic, lead, selenium and thallium at least 10 times greater than the quantitation limit. This will be used as the LFB for solid samples.

8 QUALITY CONTROL PROCEDURES

8.1 Specific quality control procedures for QA/QC samples prepared in this SOP are provided in Region 9 Laboratory SOP #513 "Determination of Arsenic, Lead, Selenium and Thallium in Solids by Graphite Furnace Atomic Absorption Spectrophotometry" and SOP #503 "Determination of Trace Elements in Solids by Inductively-Coupled Plasma - Atomic Emission Spectrometry." The preparation of the QA/QC samples are detailed in Section 9.4.

8.2 A LRB and a LFB must be prepared and digested for each batch of 20 samples of the same matrix or for every SDG, whichever is more frequent. An additional LRB and LFB must be prepared for each subsequent batch of 20 samples or for every subsequent SDG. For example, a set of 30 sediment samples would require 2 LRBs and 2 LFBs.

8.3 One LFM and one LFM duplicate must be prepared for every 20 routine samples of the same matrix in a sample batch (e.g., 1 LFM and 1 LFM duplicate for a batch containing 1-20 routine samples, 2 LFMs and 2 LFM duplicates for a batch containing 21-40 routine samples, etc.).

8.4 One batch of 20 samples may contain samples from several sites or SDGs. In this case the matrix QC (Section 8.3) must be prepared for each site or SDG but multiple sets of the rest of the QC samples (LRB and LFB) are not required.

9 ANALYTICAL PROCEDURES

9.1 Initiate a Metals Digestion Log, one for each batch of samples to be digested, before beginning with any preparations. Prepare a removable label for each sample using the VPP Labelmaker. Complete the Metals Digestion Log as given in Section 10.1 and Attachment B. Most samples will require both the ICP-AES and GFAA digestions. However, there may be occasions where only the ICP-AES or GFAA analyses are required. Check the technical direction form (TDF) for the requested analyses.

9.2 ICP-AES Solid Sample Preparation

9.2.1 Mix the sample thoroughly and weigh out a representative 1.0 $\pm$0.05g aliquot in a 50-mL polypropylene digestion vessel. Large rocks, branches and other nonfriable materials should not be used in the digestion. Decant any standing water into a waste container. (**Note**: Do **NOT** decant RCRA waste samples - check with the EPA TOPO regarding decanting of standing water for RCRA projects). Record the sample weight in the Metals Digestion Log. Perform percent solids determination on another aliquot following Region 9 SOP 460.

9.2.2 To the vessel add 10.0 mL of (1+1) HNO_3 and mix the slurry. Cover the vessel with a watch glass. Place the vessel into a polycarbonate rack and place in the hot block for reflux digestion of the analytes. The hot block must be located in a fume hood and previously adjusted to provide a reflux temperature of approximately 95°C. (See the following note.)

Note: For proper heating adjust the temperature control of the hot block such that an uncovered digestion vessel containing 50 mL of water placed in the hot block can be maintained at a temperature approximately but no higher than 85°C. (Once the vessel is covered with a watch glass the temperature of the water will rise to approximately 95°C.)

9.2.3 Heat the sample and gently reflux for 15 minutes without boiling. Remove the rack(s) containing the digestion vessels from the hot block and allow the samples to cool to room temperature.

9.2.4 To the vessel add 5.0 mL of conc. HNO_3, replace the cover and mix the slurry. Place the rack(s) containing the digestion vessels back into the hot block and reflux for approximately 3 hours. If brown fumes are generated, indicating oxidation of the sample by HNO_3, repeat this step (addition of 5.0 mL of conc. HNO_3) ONCE. If brown fumes continue to be given off the sample will require preparation using microwave digestion (Region 9 SOP 420). The sample volume should be less than 10 mL after the 3 hour digestion period. Remove the rack(s) containing the digestion vessels from the hot block and allow the samples to cool to room temperature.

9.2.5 To the vessel add 2.0 mL reagent water and 3.0 mL 30% H_2O_2 (7.3.5), replace the cover and mix the slurry. Place the rack(s) containing the digestion vessels back into the hot block and gently warm the samples for one minute. (Note: **This step must be monitored closely.** Hydrogen

peroxide will react with the sample and excessively vigorous effervescence will cause the sample to overflow out of the digestion vessel if the sample is allowed to heat! Samples which boil over are to be discarded and re-prepared with appropriate QC.) Remove the rack(s) containing the digestion vessels from the hot block and allow the samples to cool to room temperature.

9.2.6 To the vessel add an additional 3.0 mL 30% H_2O_2 (7.3.5), replace the cover and mix the slurry. Place the rack(s) containing the digestion vessels back into the hot block and warm the samples for one minute (see Note in 9.2.5). If vigorous effervescence still occurs, continue to add 30% H_2O_2 in 1-mL aliquots with warming until the effervescence is minimal or until the general sample appearance is unchanged. Do not add more than 10 mL 30% H_2O_2. Remove the rack(s) containing the digestion vessels from the hot block and allow the samples to cool to room temperature.

9.2.7 To the vessel add 10.0 mL conc. HCl (7.3.3), replace the cover and mix the slurry. Place the rack(s) containing the digestion vessels back into the hot block and gently warm the samples for one minute (see Note in 9.2.5). Remove the rack(s) containing the digestion vessels from the hot block and allow the samples to cool to room temperature.

9.2.8 Quantitatively transfer the digest to a Whatman 41 filter paper and collect the digest in a 100-mL graduated cylinder. Dilute to volume with reagent water and transfer to an acid-washed 250-mL LDPE bottle. Wash down the sides of the same filter paper with reagent water and collect the rinsings in the same 100-mL graduated cylinder. Dilute to volume with reagent water and add the rinsings to the original sample filtrate and mix. The final volume of digestate is now 200 mL. The sample digestate is now ready for analysis.

9.2.9 The Acid Digestion Log for Metals Preparation needs to be peer-reviewed for completeness and signed off by the reviewer. Make a copy to accompany the digestates. The digestates are now ready for analysis by inductively-coupled plasma - atomic emission spectrometry (ICP-AES), Region 9 SOP #503.

9.3 GFAA Solid Sample Preparation

9.3.1 Mix the sample thoroughly and weigh out a representative 1.0 $\pm$0.05g aliquot in a 50-mL polypropylene digestion vessel. Large rocks, branches and other nonfriable materials should not be used in the digestion. Decant any standing water into a waste container. (**Note**: Do **NOT** decant RCRA waste samples - check with the EPA TOPO regarding decanting of standing water for RCRA projects). Record the sample weight in the Metals Digestion Log. Perform percent solids determination on another aliquot following Region 9 SOP 460.

9.3.2 To the vessel add 10.0 mL of (1+1) HNO_3 and mix the slurry. Cover the vessel with a watch glass. Place the vessel into a polycarbonate rack and place in the hot block for reflux digestion of the analytes. The hot block must be located in a fume hood and previously adjusted to provide a reflux temperature of approximately 95°C. (See the following note.)

Note: For proper heating adjust the temperature control of the hot block such that an uncovered digestion vessel containing 50 mL of water placed in the hot block can be maintained at a temperature approximately but no higher than 85°C. (Once the vessel is covered with a watch glass the temperature of the water will rise to approximately 95°C.)

9.3.3 Heat the sample and gently reflux for 15 minutes without boiling. Remove the rack(s) containing the digestion vessels from the hot block and allow the samples to cool to room temperature.

9.3.4 To the vessel add 5.0 mL of conc. HNO_3, replace the cover and mix the slurry. Place the rack(s) containing the digestion vessels back into the hot block and reflux for approximately 3 hours. If brown fumes are generated, indicating oxidation of the sample by HNO_3, repeat this step (addition of 5.0 mL of conc. HNO_3) ONCE. If brown fumes continue to be given off the sample will require preparation using microwave digestion (Region 9 SOP 420). The sample volume should be less than 10 mL after the 3 hour digestion period. Remove the rack(s) containing the digestion vessels from the hot block and allow the samples to cool to room temperature.

9.3.5 To the vessel add 2.0 mL reagent water and 3.0 mL 30% H_2O_2 (7.3.5), replace the cover and mix the slurry. Place the rack(s) containing the digestion vessels back into the hot block and gently warm the samples for one minute. (Note: **This step must be monitored closely.** Hydrogen peroxide will react with the sample and excessively vigorous effervescence will cause the sample to overflow out of the digestion vessel if the sample is allowed to heat! Samples which boil over are to be discarded and re-prepared with appropriate QC.) Remove the rack(s) containing the digestion vessels from the hot block and allow the samples to cool to room temperature.

9.3.6 To the vessel add an additional 3.0 mL 30% H_2O_2 (7.3.5), replace the cover and mix the slurry. Place the rack(s) containing the digestion vessels back into the hot block and warm the samples for one minute (see Note in 9.2.5). If vigorous effervescence still occurs, continue to add 30% H_2O_2 in 1-mL aliquots with warming until the effervescence is minimal or until the general sample appearance is unchanged. Do not add more than 10 mL 30% H_2O_2. Remove the rack(s) containing the digestion vessels from the hot block and allow the samples to cool to room temperature.

9.3.7 Quantitatively transfer the digest to a Whatman 41 filter paper and collect the digest in a 100-mL graduated cylinder. Dilute to volume with reagent water and transfer to an acid-washed 250-mL LDPE bottle. Wash down the sides of the same filter paper with reagent water and collect the

Attachment A
Deviations From Reference Method (EPA 3050B)

A.1 Analytical procedures are documented in Region 9 SOPs 503 and 513.

A.2. Sample digestates are brought up to a final volume of 200 mL. The reference method uses a final volume of 100 mL.

A.3. Two 3.0 mL aliquots of 30% H_2O_2 are added to each sample initially. The reference method uses 3.0 mL and then 1.0 mL increments up to 10 mL of 30% H_2O_2

A.4 A hot block digestion apparatus is used instead of a hot plate. Digestion times have been increased for the addition of the conc. HNO_3 and decreased for the addition of H_2O_2 and HCl.

USEPA REGION 9 LABORATORY
RICHMOND, CALIFORNIA

STANDARD OPERATING PROCEDURE 517

ANALYSIS OF SOLID SAMPLES FOR MERCURY

Prepared by:

_____ _____
Patrick Hirata, ESAT Region 9, Lockheed Martin Date

Review by:

_____ _____
Richard Bauer, Chemistry Team Leader Date

Approved by:

_____ _____
Brenda Bettencourt, Laboratory Director Date

Periodic Review:

Signature	Title	Date

STANDARD OPERATING PROCEDURE 517

ANALYSIS OF SOLID SAMPLES FOR MERCURY

This SOP was prepared by Lockheed Martin for the United States Environmental Protection Agency (USEPA) under the Environmental Services Assistance Team (ESAT) contract (EPA contract No. 68D60005).

APPROVED BY:

Patrick Hirata, Senior Chemist, Lockheed Martin	Date
Sujith Kumar, QA/QC Coordinator, Lockheed Martin	Date
Jack Berges, ESAT Team Manager, Lockheed Martin	Date

ESAT Document Control Number: ESAT-9B-3941

CONTENTS

1 SCOPE AND APPLICATION 4

2 METHOD SUMMARY 4

3 DEFINITIONS 4

4 HEALTH AND SAFETY 6

5 SAMPLE HANDLING AND PRESERVATION 6

6 INTERFERENCES 7

7 APPARATUS AND MATERIALS 7

8 QUALITY CONTROL PROCEDURES 10

9 ANALYTICAL PROCEDURES 14

10 DOCUMENTATION 20

11 REFERENCES 21

Attachment A - Deviations from Reference Method (EPA 7471B)

Attachment B - Inorganic Standards and Reagents Preparation Log Book

Attachment C - Mercury Digestion Log

Attachment D - Leeman PS200 Mercury Run Log

Attachment E - Analytical Spreadsheet

Attachment F - QC Summary Report

1 SCOPE AND APPLICATION

1.1 This SOP describes the standard and sample preparation steps of solid samples and the instrumental analytical procedures for mercury by cold vapor atomic absorption (CVAA) The samples are analyzed using the Leeman PS200 Automated Mercury Analyzer. This method is applicable for the preparation of soils, solids, sludges and tissues for total mercury (organic + inorganic) by EPA Method 7471B.

1.2 The Region 9 Laboratory quantitation limit (QL) is 0.04 mg/Kg for total mercury analyzed using the Leeman PS200.

2 METHOD SUMMARY

2.1 An aliquot of a solid sample is transferred to a BOD bottle or equivalent closed-system container. The sample is digested with aqua regia, and a dilute potassium permanganate-potassium persulfate solution for 30 minutes at 95 °C. The digestion oxidizes all forms of mercury to Hg(II). The Hg(II) in the digested sample is reduced with stannous sulfate to elemental mercury which is sparged from the sample and detected by atomic absorption.

3 DEFINITIONS

3.1 Analytical Sample - Any sample in which mercury is being determined, excluding standards, method blanks, or QC reference samples.

3.2 Calibration Blank (CB) - A volume of reagent water fortified with the same matrix as the calibration standards, but without the analytes.

3.3 Calibration Standard (CAL) - A solution prepared from the primary dilution standard solution or stock standard solutions. The CAL solutions are used to calibrate the instrument response with respect to analyte concentration.

3.4 Field Duplicates (FD) - Two separate samples collected at the same time and placed under identical circumstances and treated exactly the same throughout field and laboratory procedures. Analyses of field duplicates indicate the precision associated with sample collection and storage as well as with laboratory procedures.

3.5 Instrument Performance Check Solution (IPC) - A standard containing mercury which is used to verify the accuracy of the analysis and monitor instrument drift. It is analyzed periodically throughout an analysis sequence.

3.6 Laboratory Fortified Blank (LFB) - An aliquot of a characterized solid matrix with the elements of interest, or alternatively, an aliquot of blank matrix to which known quantities of the elements of interest are added in the laboratory. The LFB is analyzed exactly like a sample, and its purpose is to determine whether the methodology is in control, and whether the laboratory is capable of making accurate and precise measurements. For this SOP, the LFB also serves as a solid laboratory control sample (LCSS). The Region 9 Laboratory currently uses a LFB with a true mercury concentration of 12.3 mg/Kg (acceptable range is 7.8 to 16.9 mg/Kg).

3.7 Laboratory Fortified Sample Matrix (LFM) - An aliquot of an analytical sample to which known quantities of mercury is added in the laboratory. The LFM is analyzed exactly like a sample, and its purpose is to determine whether the sample matrix contributes bias to the analytical results. The background concentrations of the analyte in the sample matrix must be determined in a separate aliquot and the measured values in the LFM corrected for background concentrations.

3.8 Laboratory Fortified Matrix Duplicate (LFMD) - A duplicate aliquot of an analytical sample to which known quantities of mercury is added in the laboratory. The LFMD is analyzed exactly like a sample, and its purpose is to determine whether the sample matrix contributes bias to the analytical results and to determine laboratory precision. The background concentrations of the analyte in the sample matrix must be determined in a separate aliquot and the measured values in the LFM corrected for background concentrations.

3.9 Laboratory Reagent Blank (LRB) - An aliquot of reagent water or other blank matrix that is treated exactly as a sample. The LRB is used to detect sample contamination resulting from the procedures used to prepare and analyze the samples in the laboratory environment.

3.10 Performance Evaluation Sample (PE) - A mercury solid sample obtained from a second-source (Environmental Resource Associates, QATS or equivalent) and distributed by the Region 9 Laboratory QA officer for analysis. Results of analyses are used by the Region 9 Laboratory to determine statistically the accuracy and precision that can be expected when a method is performed by a competent analyst. Analyte true values are unknown to the analyst.

3.11 Quality Control Sample (QCS) - An independent solution of mercury of known concentration. The QCS is obtained from a source external to the laboratory and different from the source of calibration standards. It is used to check either laboratory or instrument performance with externally prepared test materials.

3.12 Quantitation Limit (QL) - The concentration at which confidence in the reported value requires no qualifying remarks. A standard is run at the QL to verify acceptable data quality. Region 9 laboratory currently has a QL standard of 0.2 μg/L (which corresponds to 0.04 mg/Kg for total mercury in solid).

3.13 Sample Delivery Group (SDG) - A group of twenty samples or less from a project that is sent to the laboratory for analysis.

3.14 Solid Sample - For the purpose of this method, a sample taken from matrices classified as soil, sludge, solid or tissue.

3.15 Stock Standard Solution (SSS) - A concentrated solution containing one or more method analytes prepared in the laboratory using assayed reference materials or purchased from a reputable commercial source.

4 HEALTH AND SAFETY

4.1 The toxicity and carcinogenicity of each reagent used in this method has not been fully established. Each chemical should be regarded as a potential health hazard and exposure to these compounds should be minimized by good laboratory practices. Specifically, concentrated nitric and hydrochloric acids present various hazards and are moderately toxic and extremely irritating to skin and mucus membranes. Use these reagents in a fume hood whenever possible and if eye or skin contact occurs, flush with large amounts of water for at least 15 minutes. Contact your Supervisor or Health and Safety Coordinator to determine if additional treatment is required.

4.2 Mercury compounds are highly toxic if swallowed, inhaled, or absorbed through the skin. Exhaust or carrier gases should be vented to a fume hood. The analyst should use chemical resistant gloves when handling concentrated mercury standards.

4.3 The acidification of samples containing reactive materials may result in the release of toxic gases, such as cyanides or sulfides. Acidification of samples should be done in a fume hood.

4.4 Areas of high, lethal voltages exist within the water bath. Never touch parts of the water bath which are not intended for access by the operator.

5 SAMPLE HANDLING AND PRESERVATION

5.1 Samples should be collected in pre-cleaned glass jars. Approximately 20 grams should be sufficient to insure a representative sample, percent solids determination, allow for replicate analysis and minimize waste disposal.

5.2 Samples are received at the Region 9 Laboratory by EPA staff in Room 503. Sample IDs and dates of collection are verified against the chain-of-custody form.

5.3 Samples must be received and stored at 4 ± 2 °C. Any deviations from the 4 ± 2 °C temperature requirements must be noted in the report narrative.

5.4 Holding Time - The maximum sample holding time for mercury is 28 days from the time of collection.

6 INTERFERENCES

6.1 Interferences have been reported for waters containing sulfide, chloride, copper and tellurium. Organic compounds which have broad band UV absorbance (around 253.7 nm) are confirmed interferences. The concentration levels for interferants are difficult to define. This suggests that quality control procedures (Sect. 8) must be strictly followed.

6.2 Low-level mercury sample preparation, digestion, and analysis may be subject to environmental contamination if performed in areas with ambient backgrounds where mercury was previously employed as an analytical reagent in analyses such as total Kjeldahl nitrogen (TKN) or chemical oxygen demand (COD).

6.3 Volatile materials (e.g. chlorine) which absorb at 253.7 nm will cause a positive interference. The Leeman PS200 Automated Mercury Analyzer mixes digested sample and stannous sulfate reductant in a liquid/gas separator. Any interfering volatile materials should be eliminated during this mixing step.

7 APPARATUS AND MATERIALS

7.1 Apparatus

7.1.1 Leeman PS200 Mercury Analyzer - includes optical cell, mercury lamp, peristaltic pump, drying tube, liquid/gas separator, sample and reagent tubing and Leeman PS200 software.

7.1.2 Okidata Microline 320 printer, or equivalent.

7.1.3 Stirrer plate and stirring bars.
7.1.4 50-mL plastic standard cups (Leeman P/N 116-2102).
7.1.5 Disposable borosilicate autosampler vials, 16x100 mm (VWR P/N 60825-618)
7.1.6 Class "S" weights.
7.1.7 Plastic or Teflon spray bottle.
7.1.8 Analytical balance capable of weighing to the nearest 0.01 g.
7.1.9 Pipettors - variable volume, LabIndustries Repipet II, or equivalent, for dispensing reagents and acids.
7.1.10 Pipettes - calibrated fixed volume and digital variable volume, Eppendorf Model 4800, or equivalent, with appropriate trace metals-free plastic tips.
7.1.11 Water bath capable of maintaining 95 ± 5 °C with 2 to 3 cu. ft. capacity.

7.2 Glassware and Incidentals

7.2.1 Volumetric Class "A" Flasks - 1000-mL, 500-mL, 250-mL and 100-mL.
7.2.2 Volumetric Class "A" Pipettes - 50-mL, 25-mL, 10-mL and 5-mL.
7.2.3 300-mL BOD bottles, or equivalent.
7.2.4 100-mL plastic graduated cylinders.
7.2.5 Quartz wool or glass wool.
7.2.6 Glass or teflon stirring rod.
7.2.7 Stainless steel spatulas.

7.3 Materials and Reagents

Reagents may contain elemental impurities which might affect analytical data. Only high-purity reagents that conform to the American Chemical Society (ACS) specifications should be used. If the purity of a reagent is in question, analyze for contamination. Record all standard and reagent preparations in the Inorganic Standards and Reagents Preparation Log Book (Attachment B).

7.3.1 Reagent water - All references to reagent water in this method refer to ASTM Type II grade water.
7.3.2 Nitric Acid (HNO_3), concentrated, ACS Reagent Grade or better, suitable for trace metals analysis.
7.3.3 Hydrochloric Acid (HCl), concentrated, ACS Reagent Grade or better, suitable for trace metals analysis.
7.3.4 Sulfuric Acid (H_2SO_4), concentrated, ACS Reagent Grade or better, suitable for trace metals analysis.
7.3.5 Potassium permanganate, $KMnO_4$, ACS Reagent Grade or better, suitable for mercury determination.

7.3.6 Potassium persulfate, $K_2S_2O_8$, ACS Reagent Grade or better, suitable for mercury determination.

7.3.7 Hydroxylamine hydrochloride, $NH_2OH \bullet HCl$, ACS Reagent Grade or better, suitable for mercury determination.

7.3.8 Sodium chloride, NaCl, ACS Reagent Grade or better, suitable for mercury determination.

7.3.9 5% Potassium permanganate solution - Dissolve 125 g of potassium permanganate (7.3.5) in 2500 mL of reagent water. Prepare fresh every 6 months.

7.3.10 5% Potassium persulfate solution - Dissolve 125 g of potassium persulfate (7.3.6) in 2500 mL of reagent water. Prepare fresh every 6 months.

7.3.11 12% Sodium chloride-Hydroxylamine hydrochloride solution - Dissolve 120 g of hydroxylamine hydrochloride (7.3.7) and 120 g of sodium chloride (7.3.8) in 1000 mL of reagent water. Prepare fresh every 6 months.

7.3.12 1000 *u*g/mL Mercury Primary Stock Standard - JT Baker, CPI or equivalent.

7.3.13 1000 *u*g/mL Mercury Secondary Stock Standard - SPEX, Inorganic Ventures or equivalent (used for QCS analysis).

7.3.14 Aqua Regia - Prepare immediately before use by carefully adding 3 volumes of concentrated HCl (7.3.3) to one volume of concentrated HNO_3 (7.3.2).
Note: 5 mL of aqua regia is needed for each standard and sample. Prepare enough aqua regia for the entire analytical batch.

7.3.15 Stannous chloride, $SnCl_2$, ACS Reagent Grade or better, suitable for mercury determination.

7.3.16 10% $SnCl_2$ in 10% H_2SO_4 - Dissolve 100 g of stannous chloride (7.3.15) in 100 mL H_2SO_4 (7.3.4) and dilute to 1L with reagent water. Place a stirring bar into the solution. Prepare fresh monthly.

7.3.17 Argon gas, ICP grade.

7.3.18 Magnesium perchlorate (Anhydrone), granular or powder.

7.3.19 10% HCl - Add 200 mL HCl (7.3.3) to approximately 1.5 liters reagent water and dilute to 2L with reagent water.

7.3.20 Solid Laboratory Control Sample - Order a solid laboratory control sample from a manufacturer such as E.R.A. or the B.P.A. QATS contractor. This solid should have a concentration of mercury at least 10 times greater than the quantitation limit. The current solid laboratory control sample has a true mercury concentration of 12.3 mg/Kg. This will be used as the LFB for solid samples.

7.4 Standards Preparation

7.4.1 Mercury Primary Working Standard, 10 mg/L. Prepare by pipetting 1.00 mL of 1000 *u*g/mL mercury primary stock standard into a 100-mL Class A volumetric flask containing 50 mL of reagent water. Add 1.0 mL concentrated HNO_3, dilute to volume with reagent water and mix. Prepare this standard monthly.

7.4.2 Mercury Primary Daily Standard, 100 *ug*/L. Prepare by pipetting 1.00 mL of 10 mg/L mercury primary working standard into a 100 mL Class A volumetric flask containing 50 mL of reagent water. Add 1.0 mL concentrated nitric acid, dilute to volume with reagent water and mix. Prepare daily. This 100 *ug*/L mercury primary working standard will be used for calibration standards, IPC, QL, LFB, LFM and LFMD solutions.

7.4.3 Mercury Secondary Working Standard, 10 mg/L. Prepare by pipetting 1.00 mL of 1000 *ug*/mL mercury secondary stock standard into a 100-mL Class A volumetric flask containing 50 mL of reagent water. Add 1.0 mL concentrated HNO_3, dilute to volume with reagent water and mix. Prepare this standard monthly.

7.4.4 Mercury Secondary Daily Standard, 100 *ug*/L. Prepare by pipetting 1.00 mL of 10 mg/L mercury secondary working standard into a 100-mL Class A volumetric flask containing 50 mL of reagent water. Add 1.0 mL concentrated HNO_3, dilute to volume with reagent water and mix. Prepare daily. This 100 *ug*/L mercury secondary working standard will be used for the QCS solution.

8 QUALITY CONTROL PROCEDURES

8.1 EPA Region 9 Laboratory operates a formal quality control (QC) program. As it relates to this SOP, the QC program consists of an initial demonstration of laboratory capability, and the periodic analysis of laboratory reagent blanks, fortified blanks, QCS samples and other laboratory solutions as a continuing check on performance. The laboratory is required to maintain performance records that define the quality of the data that are generated.

8.2 Initial Demonstration of Proficiency - Prior to use in routine analysis, each analyst must perform the procedures noted in Region 9 Laboratory SOP 880.

8.3 Routine Analytical Quality Control

8.3.1 Calibrate the instrument using the standards prepared in Section 9.4. Check the correlation coefficient (r); the correlation coefficient of the curve must be $\geq$0.995 or the instrument must be re-calibrated. All five standards and the blank **MUST** be used when determining the correlation coefficient.

8.3.2 IPC - The accuracy and stability of the calibration is verified by the periodic analysis of an IPC standard. It must be analyzed immediately after calibration, after every 10 samples, and at the end of an analytical run. The concentration of mercury in the IPC is 2.0 μg/L. The recovery of mercury in the IPC is calculated as follows:

$$\%R = \frac{M}{T} \times 100$$

Where

$\%R$	=	percent recovery of the standard.
M	=	measured concentration of the analyte, μg/L.
T	=	true concentration of the analyte in the IPC, μg/L.

Recovery of the IPC analyzed immediately after calibration must be within 95-105% or the analysis must be terminated. Subsequent analyses of the IPC solution must be within 90 - 110% or the analyses must be terminated. The cause of the poor recovery must be determined and the problem corrected. The instrument must be re-calibrated and all samples not bracketed by acceptable IPC results must be re-analyzed.

8.3.3 CB - The stability of the calibration curve baseline must be monitored by analyzing a CB immediately after every IPC standard. If the absolute value of the CB result is less than ½ the QL, the result is acceptable. If the absolute value of the CB result equals or exceeds ½ the QL, the analysis must be terminated. The cause of the high CB result must be determined and the problem corrected. The instrument must be re-calibrated and all samples not bracketed by acceptable CB results must be re-analyzed.

8.3.4 QCS Analysis - The mercury concentrations in a QCS sample must be measured daily or once per batch of 20 samples, whichever is more frequent. The concentration of mercury in the QCS is 2.0 μg/L. The recovery of mercury in the QCS is calculated as follows:

$$\%R = \frac{C_m}{C_t} \times 100$$

Where

$\%R$	=	relative percent recovery.
C_m	=	measured mercury concentration in the QCS, μg/L.
C_t	=	true mercury concentration in the QCS, μg/L.

The recovery must be within 90-110% or the analyses must be terminated. The cause of the poor recovery must be determined and the problem corrected. The instrument must be re-calibrated and all affected samples must be re-analyzed. If, after re-calibration, the QCS recovery still exceeds the 90-110% limits, the calibration standards and QCS standard must be re-prepared and the instrument re-calibrated.

8.3.5 QL - The accuracy of the calibration at the quantitation limit shall be verified by the periodic analysis of an QL standard. The QL must be analyzed at the beginning of each analytical run, immediately after the QCS. The concentration of mercury in the QL is 0.2 μg/L. The recovery of mercury in the QL is calculated as follows:

$$\%R = \frac{M}{T} \times 100$$

Where

$\%R$	=	percent recovery of the standard.
M	=	measured concentration of the analyte, μg/L.
T	=	true concentration of the mercury in the QL, μg/L.

If the QL recovery exceeds the limits of 50-150%, the analysis shall be terminated. The cause of the poor recovery must be determined and the problem corrected. The instrument must be re-calibrated and all affected samples must be re-analyzed. If, after re-calibration, the QL recovery still exceeds the 50-150% limits, the calibration standards must be re-prepared and the instrument re-calibrated.

8.3.6 LRB - The laboratory must analyze at least one LRB daily or with each batch of 20 or fewer samples of the same matrix, whichever is more frequent. LRB data are used to assess contamination from the laboratory environment. LRB values that exceed the QL indicate potential laboratory contamination. If the potential contamination significantly impacts the analytical results, the LRB must be re-prepared along with the affected samples, and re-analyzed. Unless specified otherwise by project DQOs, the following statements describe when samples must be re-prepared and re-analyzed:

1) If the LRB analyte concentration is $\geq$ the QL and the sample result is less than 5 times the LRB analyte concentration, the LRB and sample must be re-prepared and re-analyzed.

8.3.7 LFB - The laboratory must analyze at least one LFB daily or with each batch of 20 or fewer samples of the same matrix, whichever is more frequent. The Region 9 Laboratory currently uses a LFB with a true mercury concentration of 12.3 mg/Kg (acceptable range is 7.8 to 16.9 mg/Kg). The recovery of mercury in the LFB is calculated as follows:

$$\%R = \frac{LFB}{s} \times 100$$

Where

$\%R$	=	percent recovery.

LFB	=	measured concentration of mercury in the LFB, mg/Kg.
s	=	expected mercury concentration in the LFB, mg/Kg.

The recovery of mercury in the LFB must be within the manufacturer's acceptance limits. If the recovery of mercury exceeds the limits, it is judged to be out-of-control, and the source of the problem must be identified and resolved before continuing analyses.

8.3.8 LFM - The LFM is designed to provide information about the effect of sample matrix on the measurement system. One LFM must be prepared for every 20 routine samples of the same matrix in a sample batch (e.g., 1 LFM for a batch containing 1-20 routine samples, 2 LFMs for a batch containing 21-40 routine samples, etc.). Homogenize the routine sample selected as the LFM, obtain a representative aliquot, and proceed with sample preparation and analysis, treating the LFM sample as a routine sample. The recovery of mercury in the LFM is calculated as follows:

$$\%R = \frac{C_{lfm} - C}{s} \times 100$$

Where

%R	=	percent recovery.
C_{lfm}	=	measured concentration in the LFM corrected for sample preparation and any dilutions, mg/Kg.
C	=	measured concentration of mercury in the routine sample corrected for sample preparation and any dilutions, mg/Kg.
s	=	expected mercury concentration in the LFM, corrected for sample preparation and any dilutions, mg/Kg.

If the value of ***C*** is less than 4 times the value of ***s***, the acceptance window for ***%R*** is 75-125%. If the recovery of mercury falls outside the acceptance window other QC data must be examined to determine if a matrix problem exists. If the laboratory performance is in control (i.e., the IPC, QL, QCS, and LFB results are acceptable), the poor LFM recovery is most likely matrix-related. The affected mercury result should be flagged as estimated (J) on the analytical spreadsheet and a comment added on the spreadsheet and report narrative informing the data user that matrix effects may be present in samples of similar composition.

8.3.9 LFMD - Sample homogeneity can affect the quality and interpretation of the data. LFMD results can be used to assess sample homogeneity. One LFMD must be prepared for every 20 routine samples of the same matrix in a sample batch (e.g., 1 LFMD for a batch containing 1-20 routine samples, 2 LFMDs for a batch containing 21-40 routine samples, etc.). Homogenize the routine sample selected as the LFMD, obtain a representative aliquot, and proceed with sample

preparation and analysis, treating the LFMD sample as a routine sample. Calculate the recovery of mercury in the LFMD as in Section 8.3.8. Calculate the relative percent difference using the following equation:

$$\%RPD = \frac{|C_{lfmd} - C_{lfm}|}{(C_{lfmd} + C_{lfm})/2} \times 100$$

Where

$\%RPD$ = relative percent difference.

C_{lfm} = measured concentration in the LFM corrected for sample preparation and any dilutions, mg/Kg.

C_{lfmd} = measured concentration in the LFMD corrected for sample preparation and any dilutions, mg/Kg.

If the recovery of mercury falls outside the acceptance window other QC data must be examined to determine if a matrix problem exists. If the laboratory performance is in control (i.e., the IPC, QL, QCS, and LFB results are acceptable), the poor LFMD recovery is most likely matrix-related. The affected mercury result should be flagged as estimated (J) on the analytical spreadsheet and a comment added on the spreadsheet and report narrative informing the data user that matrix effects may be present in samples of similar composition.
The relative percent difference (RPD) must be $\leq$20%. If the control limits are exceeded, the affected mercury result should be flagged as estimated (J) on the analytical spreadsheet and a comment added on the spreadsheet and report narrative informing the data user that sample imprecision may be present in samples of similar composition.

8.4 A set of six calibration standards, an IPC standard, a CB, a QL standard and a QCS standard must be prepared for a SDG or with a batch of similar samples. Multiple SDGs or batches may be digested and analyzed with the set of calibration standards as long as each of the LFM and LFMD samples are spiked with the same mercury primary daily standard which were used to prepare the calibration standards, IPC and QL standards.

8.5 A LRB and a LFB must be prepared and digested for each batch of 20 samples of the same matrix. An additional LRB and LFB must be prepared for each subsequent batch of 20 samples. For example, a set of 30 solid samples would require 2 LRBs and 2 LFBs.

8.6 One LFM and one LFMD must be prepared for every 20 routine samples of the same matrix in a sample batch or SDG (e.g. 1 LFM and 1 LFMD for a batch containing 1-20 routine samples, 2 LFMs and 2 LFMDs for a batch containing 21-40 routine samples, etc.)

8.7 One batch of 20 samples may contain samples from several sites or SDGs. In this case the matrix QC (Sections 8.3.8 and 8.3.9) must be prepared for each site or SDG but multiple sets of the rest of the QC samples are not required.

9 ANALYTICAL PROCEDURES

9.1 Initiate a Mercury Digestion Log, one for each batch of samples to be digested, before beginning with any preparations. Complete the Mercury Digestion Log as given in Sections 9.5.5, 9.5.6, 9.5.7, 9.5.8 and Attachment C.

9.2 Balance Calibration Verification - On a daily basis, prior to use, check the analytical balance with Class S weights of 200 mg, 1 g, 10 g and 100 g. The relative difference between the measured weight and the certified weight must be less than 0.5 %. The results of the balance verification must be recorded in the balance logbook.

9.3 Solid Sample Preparation. On a laboratory cart or bench top in the designated sample prep area, arrange the samples in alpha-numeric order according to laboratory ID. Place a corresponding 300-mL BOD bottle in front of each sample and record the BOD bottle number in the digestion log for each sample.

9.3.1 Weigh approximately 0.5 grams of a well-mixed sample to the 300-mL BOD bottle. Large rocks, branches and other nonfriable materials should not be used in the digestion. Decant any standing water into a waste container. (**Note**: Do **NOT** decant RCRA waste samples - check with the EPA work assignment manager (WAM) regarding decanting of standing water for RCRA projects). Record the sample weight in the preparation log. Add 15 mL of reagent water. Swirl the bottle to mix.

9.3.2 Add 5 mL of aqua regia (7.3.14). Swirl the bottle to mix.

9.3.3 Heat at 95 $\pm$5°C on a hot plate for two minutes. Allow to cool to room temperature.

9.3.4 Add 35 mL reagent water and 15 mL of the 5% potassium permanganate solution (7.3.9) and swirl the bottle to mix. The solution should turn a purplish color.

NOTE: An excess of potassium permanganate must be maintained at all times throughout the digestion. Samples containing high concentrations of oxidizable organic substances may require

additional potassium permanganate. A visual check for the presence of excess permanganate is the deep purple color. This purple color must be maintained throughout the digestion procedure. A by-product of the oxidation is dark brown to black manganese dioxide, MnO_2, which can mask or obscure the purple color. If in doubt of the purple color, allow the manganese dioxide to settle, and tilt the bottle slightly to observe clear solution. If additional potassium permanganate is required, that amount must be added to all standards and samples. (The calibration curve is generated assuming that the volumes of samples and standards are constant, approximately 134 mL. The addition of any additional potassium permanganate to a sample would dilute that sample by the volume added; this SOP does not factor in any differences in sample + reagent volume.)

9.3.5 Add 8 mL of the 5% potassium persulfate solution (7.3.10) and swirl the bottle to mix.

9.3.6 Place the 300-mL BOD bottles containing the samples in the water bath for 30 minutes at 95 ±5°C. Record the time the samples were placed in the water bath and the initial temperature (in °C).

9.3.7 At the end of the 30 minute heating period, remove the bottles from the water bath, mix well, and allow to cool to room temperature.

NOTE: All calibration standard, QA/QC standard and sample solutions must exhibit a purple permanganate color at this point. If any solutions do not exhibit the purple color, additional potassium permanganate must be added to **all** standards and samples, and the 30 minute water bath digestion repeated.

9.3.8 Add 50 mL of reagent water and 6 mL of the sodium chloride-hydroxylamine hydrochloride solution (7.3.11) and mix well.

NOTE: The solution should become clear and colorless. If the solution remains purple in color, continue to add sodium chloride-hydroxylamine solution in 3 mL increments until the purple color disappears. If additional sodium chloride- hydroxylamine solution is required, that amount must be added to **all** standards and samples. The dark brown to black residue of manganese dioxide, MnO_2, which forms from reduction of the permanganate will also be dissolved by the hydroxylamine solution, and must be completely dissolved before analysis. Additional hydroxylamine solution may be required to completely dissolve the manganese dioxide. If additional hydroxylamine solution is required, that amount must be added to **all** standards and samples.

9.3.9 The completed Mercury Digestion Log must be peer-reviewed for completeness and correctness and signed off by the reviewer. A copy of the log is made and should accompany the digestates.

9.4 Leeman PS200 Calibration Standards. Prepare calibration standards by pipetting 0.0, 0.2, 0.5, 1.0, 5.0 and 15.0 mL aliquots of the 100 *ug*/L mercury primary daily standard (Sect.

7.4.2) to a series of 300-mL BOD bottles. Dilute the standard aliquots to 15 mL with reagent water and process as described in Sections 9.3.2 through 9.3.9. (Note: If additional potassium permanganate was added to ANY sample, the same amount of potassium permanganate must be added to **all** standards and samples to keep the sample + reagent volumes constant.)

Calibration Standard ID	mL 100 *ug*/L Daily Standard Solution	Reagent water volume added to Daily Standard Solution (mL)	Final Standard Concentration after addition of reagents and reagent water (*ug*/L)
S1	0	15	0
S2	0.2	~15	0.2
S3	0.5	14.5	0.5
S4	1.0	14	1.0
S5	5.0	10	5.0
S6	15.0	0	15.0

9.5 Quality Control Sample Preparation

Refer to Section 8 of this SOP for a discussion of the frequency of QC sample preparation.

9.5.1 IPC Preparation. Pipet 2.0 mL of 100 *ug*/L mercury primary daily standard (7.4.2) into a 300-mL BOD bottle and add 98 mL of reagent water. The concentration of the QL is 2.0 *ug*/L. Process as described in Sections 9.3.2 through 9.3.9.

9.5.2 CB Preparation. Transfer 100 mL of reagent water to a 300-mL BOD bottle. Process as described in Sections 9.3.2 through 9.3.9.

9.5.3 QL Standard Preparation. Pipet 200 *u*L of 100 *ug*/L mercury primary daily standard (7.4.2) into a 300-mL BOD bottle and add 100 mL of reagent water. The concentration of the QL is 0.2 *ug*/L. Process as described in Sections 9.3.2 through 9.3.9.

9.5.4 QCS Preparation. Pipet 2.0 mL of 100 *ug*/L mercury secondary daily standard (7.4.4) into a 300-mL BOD bottle and add 98.0 mL of reagent water. The concentration of the QCS is 2.0 *ug*/L. Process as described in Sections 9.3.2 through 9.3.9.

9.5.5 LRB Preparation. Transfer 15 mL of reagent water to a 300-mL BOD bottle. Process as described in Sections 9.3.2 through 9.3.9.

9.5.6 LFB Preparation. Weigh 0.5 grams of LFB into a 300-mL BOD bottle. Record the sample weight in the preparation log. The concentration of the LFB is 12.3 mg/Kg. Process as described in Sections 9.3.2 through 9.3.9.

9.5.7 LFM Preparation. Weigh approximately 0.5 grams of a well-mixed sample designated as the QC sample to the 300-mL BOD bottle. Record the sample weight in the preparation log. Add 15 mL of reagent water. Swirl the bottle to mix. Pipet 2.0 mL of 100 *u*g/L mercury primary daily standard (7.4.2) into the sample. Mix well. Select a second QC sample for

LFM preparation if there are more than 20 samples in the batch. The concentration of the LFM is 2.0 *u*g/L. Process as described in Sections 9.3.2 through 9.3.9.

9.5.8 LFMD Preparation. Weigh approximately 0.5 grams of a well-mixed sample designated as the QC sample to the 300-mL BOD bottle. Record the sample weight in the preparation log. Pipet 2.0 mL of 100 *u*g/L mercury primary daily standard (7.4.2) into the sample. Mix well. Select a second QC sample for LFMD preparation if there are more than 20 samples in the batch. The concentration of the LFMD is 2.0 *u*g/L. Process as described in Sections 9.3.2 through 9.3.9.

9.6 Calibration and Standardization for the Leeman PS200 Automated Mercury Analyzer - The analyst is advised to follow the recommended operating conditions provided by the manufacturer. It is the responsibility of the analyst to verify that the instrument configuration and operating conditions satisfy the analytical requirements, and to maintain quality control data verifying instrument performance. Typical operating parameters for the Leeman PS200 Automated Mercury Analyzer are as follows:

Parameter	Setting
Argon Flow Rate	0.30 LPM
Pump Rate	5.0 mL/min

9.7 Analytical Run Sequence (Leeman PS200 Automated Mercury Analyzer)

9.7.1 Set-up and configure the instrument and data system. The Leeman PS200 mercury analyzer will be operational from a cold start (i.e. Leeman PS200 turned off) after an approximate 2.5 hour warm-up period. Inspect the pump tubing for pinching. Replace the pump tubing if excessive wear is apparent. Clamp the pump tubings in the holder and snap to seal. Prepare a fresh magnesium perchlorate drying tube by inserting some glass or quartz wool into a clean, dry drying tube, and

adding magnesium perchlorate to fill the tube up to the neck. Tap the tube to allow magnesium perchlorate to settle (do not compact the magnesium perchlorate), plug the drying tube with some more glass or quartz wool and attach the drying-tube fittings so that they are finger-tight. Pour out the reservoir containing reagent water into

a waste container and add 10% hydrochloric acid (7.3.19) to a level approximately 1 inch from the top. Lightly oil the autosampler traverse arm and wipe clean.

9.7.2 After the 2.5 hour warm-up sequence has been completed, check the aperture reading by getting into the **Utility** menu and then into the **Diagnostics** menu. The aperture should be -100 to +100 (an ideal reading is zero); if not, take off the front panel of the PS200 and, using the hex wrench provided, gently adjust the bottom nut (if the value is negative) or the top nut (if the value is positive) so that the aperture reading is within the range and then replace the front panel. Use the **User Name** menu to enter analyst initials and then get back to the **Main Menu**. Select the **Protocol** (Mercury) and enter in a file name (for example, 20012061 which corresponds to instrument #2 (the Leeman PS200), the date (12/06/00), and the first run of the day(1)). Transfer the calibration standards (in order, 0, 0.2, 0.5, 1.0, 5.0 and 15.0 μg/L mercury) into the first 6 spots in the 50mL standards tube rack. Place the bottle of 10% $SnCl_2$ in 10% HCl onto a stirring plate, stir, and put the reductant tubing into the container.

9.7.3 Transfer the QA/QC standards and samples into clean autosampler vials and place into the 44-sample capacity rack.

9.7.4 Enter the autosampler loading list into data system using **Rack Entry** and **Setup**, including all required QC and routine samples. Print the autosampler entries by pressing the F3 key.

9.7.5 Calibrate the instrument using the six standards. After calibration, get into **Calibration** on the **Main Menu** and then get into the **Line Calibration** menu. The current curve will be highlighted on the graph. Check the correlation coefficient (r); the correlation coefficient of the curve must be $\geq$0.995 or the instrument must be re-calibrated. If the correlation coefficient meets the 0.995 requirement, press the **A** key to Accept the curve and press the F3 key to print the curve. All six standards must be used to determine the correlation coefficient. The Leeman PS200 software allows you to delete a standard from the calibration. **Deletion of standards must never be performed!**

9.7.6 Start autosampler analysis sequence and analyze samples. Review results for QC compliance and off-scale results. Identify samples which must be re-analyzed in a different analytical run. Samples having analytes at concentrations greater than 15 μg/L must be diluted into calibration range and re-analyzed.

9.7.7 An example of a loading list for an analytical run sequence is listed in the table below.

Seq.	Desc.	Seq.	Desc.	Seq.	Desc.
1	IPC	13	IPC	25	IPC
2	CB	14	CB	26	CB
3	QCS	15	S5	27	S15
4	QL	16	S6	28	S16
5	LRB	17	S7	29	S17
6	LFB	18	S8	30	S18
7	S1	19	S9	31	S19
8	S1-LFM	20	S10	32	S20
9	S1-LFMD	21	S11	33	IPC
10	S2	22	S12	34	CB
11	S3	23	S13	35	
12	S4	24	S14	36	

9.8 Data Reduction and Reporting - After set-up and calibration the Leeman PS200 software reports results for the analyzed solution in units of μg/L. Solid samples should be reported using the following equation:

$$R = \frac{Mx(0.1L)x(1mg/1000ug)xD}{(W)x(1Kg/1000g)x(\%solids/100)}$$

where:

R	=	final reported concentration, in mg/Kg.
M	=	measured concentration reported by instrument, in μg/L.
D	=	dilution factor, to account for dilution performed after sample preparation.
W	=	Weight of sample, in grams.

The concentrations reported by the instrument must be corrected for any dilutions performed as part of the sample preparation or analysis process. All results should be reported using no more than two significant figures; however, no values of less significance than the QL may be reported (values near the QL will be reported with only one significant figure). Report down to ½ the QL. Values between ½ the QL and the QL will be flagged as estimated (J flag). For rounding results, adhere to the following rules:

a) If the number following those to be retained is less than 5, round down;
b) If the number following those to be retained is greater than 5, round up; or
c) If the number following the last digit to be retained is equal to 5, round down if the digit is even, or round up if the digit is odd.

10 DOCUMENTATION

10.1 Mercury Digestion Log - Entries are made for the case number, SDG number, date of preparation, electronic file ID, QC solution IDs, analyst initials, lab sample IDs, client sample IDs, sample aliquots, volume of acids added, volume of reagents added, final volume of digestate and comments, if any. A copy of the mercury digestion log must be submitted with the raw data. The Leeman PS200 digestion log is maintained in Room 302.

10.2 Standards Documentation - Copies of all standard solution preparation entries (CAL, IPC, QL, LFB, LFM, LFMD, QCS, etc.) must be submitted with each raw data package.

10.3 Leeman PS200 Mercury Run Log - Entries are made for the case number, SDG number, date of analysis, site name, file name, analyst initials, lab sample IDs, client sample IDs, standard IDs and comments, if any. The run log is maintained in Room 302.

10.4 Report Narrative and Deliverable

The data package consists of the report narrative, reports and data, as listed in the table below.

Data Package Contents
Report Narrative: Discusses any problems encountered, both technical and administrative, the corrective action taken, and the resolution. All universal analytical flags should also be discussed in the report narrative.
Tabulated sample results on an analytical spreadsheet, with units, sample collection dates, client sample IDs, laboratory IDs and station locations. (Attachment E)
Method blank data included on the analytical spreadsheet. (Attachment E)

LFM and LFMD results on a QC summary report with calculated relative percent difference (RPD). (Attachment F)

LFM and LFB results on a QC summary report with calculated percent recoveries (%R). (Attachment F)

Raw sample, standard and QC data, including run logs and any work sheets, if applicable. (Attachments B, C and D)

11 REFERENCES

11.1 U.S. Environmental Protection Agency, Office of Solid Waste and Emergency Response. Method 7471b, Mercury in Solid or Semisolid Waste (Manual Cold-Vapor Technique), Revision 2, January 1998.

11.2 Test Methods for Evaluating Solid Waste, Physical/Chemical Methods, 3rd ed.; U.S. Environmental Protection Agency, Office of Solid Waste and Emergency Response. U.S. Government Printing Office: Washington, DC, 1996; SW-846.

11.3 Region 9 SOP 110, *Sample Receipt, Log-in and Storage.*

11.4 Region 9 SOP 125, *Sample Disposal.*

11.5 Region 9 SOP 130, *Glassware Cleaning Procedures.*

11.6 Region 9 SOP 840, *Notebook Documentation and Control.*

11.7 Region 9 SOP 880, *Demonstration of Laboratory Capability and Analyst Proficiency.*

Attachment A
Deviations From Reference Method (EPA 7471B)

A.1 This SOP uses the Leeman PS200 Automated Mercury Analyzer which requires only a small digested sample aliquot (approximately 5 mL) to perform the mercury analysis. Method 7471B requires purging of the headspace in the digestion vessel, the addition of stannous sulfate solution to the entire digested sample and then analysis of the digested sample. It is a destructive technique in that the entire digested sample is used. Samples which are over-range require re-digestion and dilution in a subsequent digestion batch. This SOP allows for dilution of over-range samples since only 5 mL of digested sample was used during the initial analysis.

A.2 The calibration curve generated by the Leeman PS200 Automated Mercury Analyzer used in this SOP is generated electronically and gives results in units of *ug*/L. The calibration is performed assuming that the volume of sample (or standard) + reagent is constant (approximately 136.5 mL).

A.3 Potassium persulfate is added to all standards and samples to eliminate the interferences caused by high concentrations of oxidizable organic materials which can cause low recoveries of organic mercury.

Appendix B
Summary of Multiport Monitoring Well System

MULTIPLE-LEVEL GROUND WATER MONITORING

WITH THE MP SYSTEM*

W.H. Black, H.R. Smith and F.D. Patton

Westbay Instruments Ltd.
North Vancouver, B.C.

Abstract

Defining the extent of a groundwater contaminant plume in geologic materials requires a three-dimensional array of sampling points. Such an array is commonly installed by placing a single access tube and inlet screen in each of a series of boreholes. With this method, the number of sampling points at a given site is generally limited by the high cost of drilling. An alternative is to install monitoring points at many levels in each drillhole. Multiple-level monitoring can provide increased data density and therefore an improved understanding of site conditions. This paper describes how the MP System, one type of multiple-level monitoring well, is installed and operated. Field quality control procedures, 1) to verify the integrity of the access tube, inlet valves and screens, and drillhole seals, and 2) to confirm the operation of measuring and sampling equipment, are also discussed.

Introduction

When ground water contaminant plumes are suspected of having significant depth as well as lateral distribution, a three-dimensional array of monitoring points is needed to identify and characterize such plumes. Thus, ground water data must be obtained from a number of different locations and from a number of different depths at each location. As a result, either a large number of drillholes are required, each with a separate instrument installed, or instruments must be combined and installed at multiple levels in each of a smaller number of drillholes.

Reprint from Proceedings of the NWWA-AGU Conference on Surface and Borehole Geophysical Methods and Groundwater Instrumentation. Denver, Co., October 15-17, 1986, pp 41-61.

* Revised May 29, 1989. See Page 56.

Multiple-level ground water monitoring devices have been described by many writers including: Hansen and Harris (1974), Pickens et al. (1978), Patton (1979, 1983 and 1984), Cherry and Johnson (1982), Williams (1982), Barvenik and Cadwagan (1983), Davison (1984), Smith et al. (1984), Novakowski et al. (1985) and Molz et al. (1986). Patton and Smith (1986) proposed a classification of multiple-level ground water monitoring wells. Rehtlane and Patton (1982), Barvenik and Cadwagan (1983) and Nazar et al. (1984) have addressed some of the advantages to schedules and costs which can result when multiple-level monitoring devices are used to reduce the number of drillholes required. More important, however, are the technical advantages that accrue from the increased data density and from the field verification procedures that are available.

The basic requirements of any ground water monitoring system are that it provide the user with the ability to measure fluid pressure, purge the monitoring zone prior to sampling, obtain fluid samples, and undertake standard hydrogeologic tests, such as permeability tests and tracer tests. In addition, quality assurance plans for groundwater monitoring programs have led to a requirement for periodic testing and calibration of all aspects of ground water monitoring devices.

Quality assurance plans normally require field verification tests immediately following installation and again at periodic intervals during the operating lifetime of the installation. Not all ground water monitoring devices allow extensive field verification tests to be carried out. However, some types of multiple-level monitoring instruments, such as the MP System developed by Westbay Instruments Ltd., were designed with field verification tests in mind (Patton and Smith, 1986). With such systems, questions of data quality can be readily addressed.

General Description of the MP System

The MP System is a modular multiple-level ground water monitoring device employing a single, closed access tube with valved ports. The valved ports are used to provide access to several different levels of a drillhole in a single well casing. The modular design permits as many monitoring zones as desired to be established in a drillhole. Furthermore, at the time of installation, zones may be added or modified without affecting other zones or significantly complicating the installation.

The MP System consists of casing components, which are permanently installed in the drillhole, portable pressure measurement and sampling probes, and specialized tools. The casing components include casing sections of various lengths, regular couplings, two types of valved port couplings with different capabilities, and packers, which seal the annulus between the monitoring zones. The MP System has been used in many different geologic and climatic environments in drillholes ranging from a few feet to 4,000 ft (1,200 m).

Casing Components

The casing components of the MP System are made in either plastic or

stainless steel. The descriptions that follow apply to both types of materials. Most of the components referred to are shown in Figures 1 and 2.

Casing

MP casing is supplied in a number of different lengths to provide flexibility in establishing the position of monitoring zones and associated seals in the drillhole. Common nominal casing lengths are 5 ft (1.5 m) and 10 ft (3.0 m). Actual casing lengths are less than the nominal lengths to account for the lengths of the couplings. The casing ends are machined to mate with MP System couplings.

Telescoping casing sections are used to protect the casing string from damage when ground movements are anticipated or where measurements of vertical displacements are desired.

Regular Couplings and End Caps

MP regular couplings are used to connect casing lengths where valved couplings are not required. The couplings incorporate O-rings for a positive hydraulic seal. A flexible shear rod assures a tensile connection. No adhesives are used when joining casings and couplings. Regular couplings incorporate an internal, helical shoulder for the accurate location of probes and tools in the well. End caps are placed on the bottom of a casing string. They also incorporate an O-ring seal so that the entire casing string is hydraulically sealed during installation. End caps are frequently used to seal the top of the casing between monitoring periods.

Valved Couplings

There are two types of valved couplings, measurement port couplings and pumping port couplings. Measurement port couplings (or measurement ports) are used where pressure measurements and fluid samples are required. In addition to the features of a regular coupling, measurement ports incorporate a valve in the wall of the coupling, a leaf spring which normally holds the valve closed, and a cover plate which holds the spring in place. When the valve is opened, an access port is provided for the ground water to enter the coupling.

Pumping port couplings (or pumping ports) are used where the injection or withdrawal of large volumes of fluid is desired (such as for well development or hydraulic conductivity testing). Pumping ports incorporate an interior sleeve valve, sealed by O-rings, which can be moved to expose or cover slots that allow ground water to pass through the wall of the coupling. A screen is normally fastened around the coupling outside the slots.

Seals

When there are many monitoring zones in a single drillhole, multiple seals are required to prevent fluid migration from one zone to another

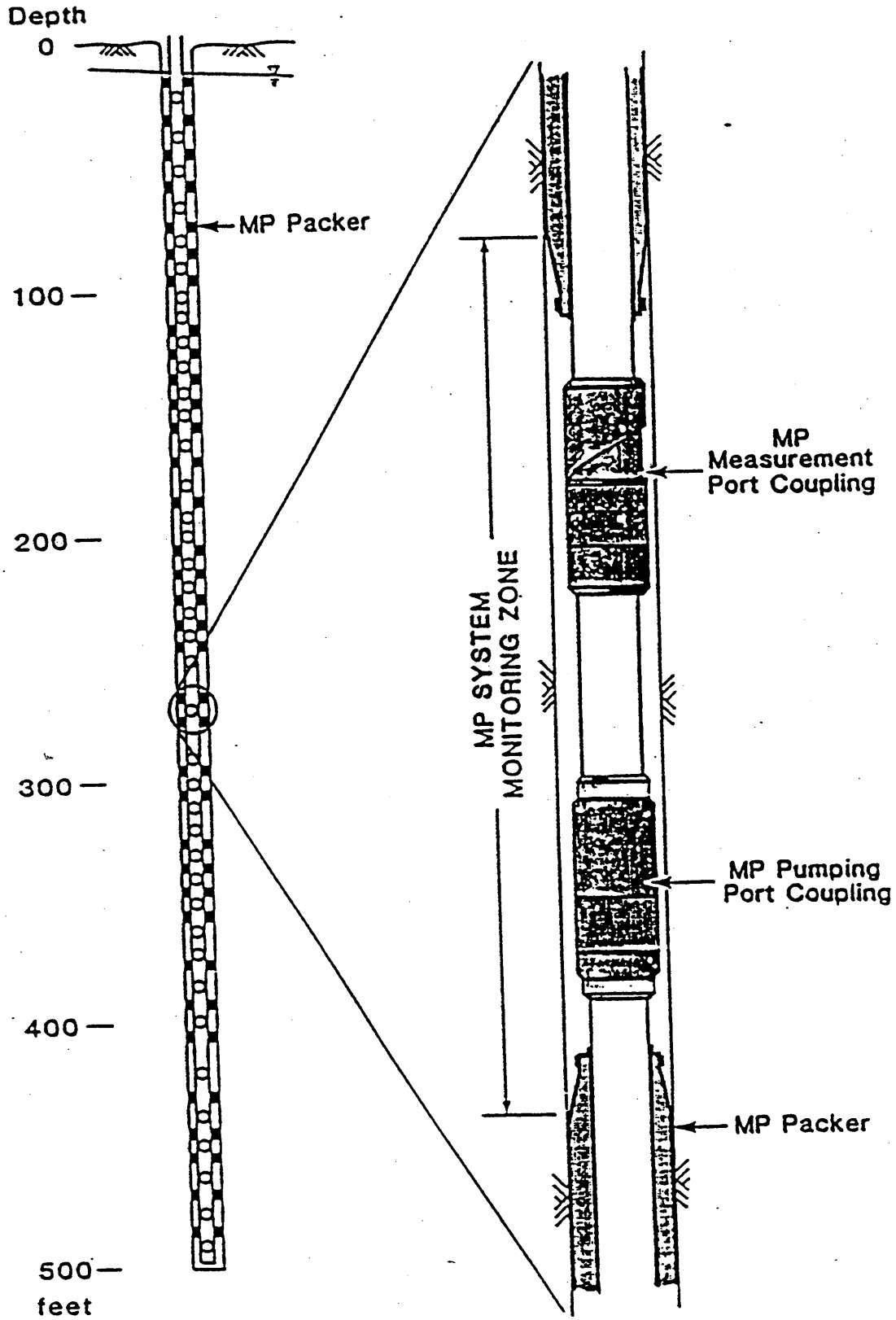

Figure 1. MP System installation with monitoring zones isolated by packers.

along the annular opening between the drillhole wall and the casing. Placement of these seals can be difficult with any ground water monitoring device. However, considerable success has been achieved with two types of seals used with the MP System, provided each is combined with specific drilling and placement methods.

With the MP System seals can be obtained by: a) using hydraulic (water) inflatable packers or b) backfilling with alternating layers of sand and bentonite or grout. A drillhole containing the MP System with packers is shown in Figure 1. A single measurement zone where the MP System is completed by backfilling is shown in Figure 2. Both sealing methods are possible in most environments, but in some situations one or the other may be preferred.

Hydraulic Inflatable Packers

MP casing packers incorporate an expandable gland mounted over a standard length of MP casing and a one-way valve that allows fluid to travel through the wall of the casing into the packer and prevents this fluid from flowing back out of the packer. Gland lengths are typically 3 ft (~1 m), although short glands are available which would permit monitoring zones to be placed as close as every 1.5 ft (0.46 m).

Packers are recommended for: a) small diameter drillholes (those too small for good quality backfilling to be achieved), b) deep drillholes, and c) sealing against significant flows (e.g., flowing artesian conditions) in the drillhole. When packers are used, field labour is reduced since packer inflation is generally much faster than backfilling.

Backfilling is recommended for: a) large diameter drillholes, b) shallow drillholes, c) drillholes where little or no fluid circulation is anticipated in the hole during installation (i.e., when near-hydrostatic fluid pressures or low hydraulic conductivity is present over the length of the drillhole), and d) where packer gland materials are incompatible with the chemistry of the fluids present.

Backfill seals may include bentonite and/or grout slurries, bentonite chips or pellets or other materials with a relatively low hydraulic conductivity in comparison to that of the natural formations present.

Screens and Filters

Where both pumping ports and measurement ports are being used and the ports are likely to be surrounded by sand fill or collapsed geologic material, a single well screen is generally placed over both the measurement port coupling and pumping port coupling in each monitoring zone as shown in Figure 2. The screen helps ensure that the zone influenced by pumping from a pumping port coupling will extend to and include the region surrounding the adjacent measurement port coupling. Screen slot size and length should be chosen with a knowledge of local site conditions. If only fluid pressure measurements are required, a simpler fabric filter tube can be placed over the measurement port

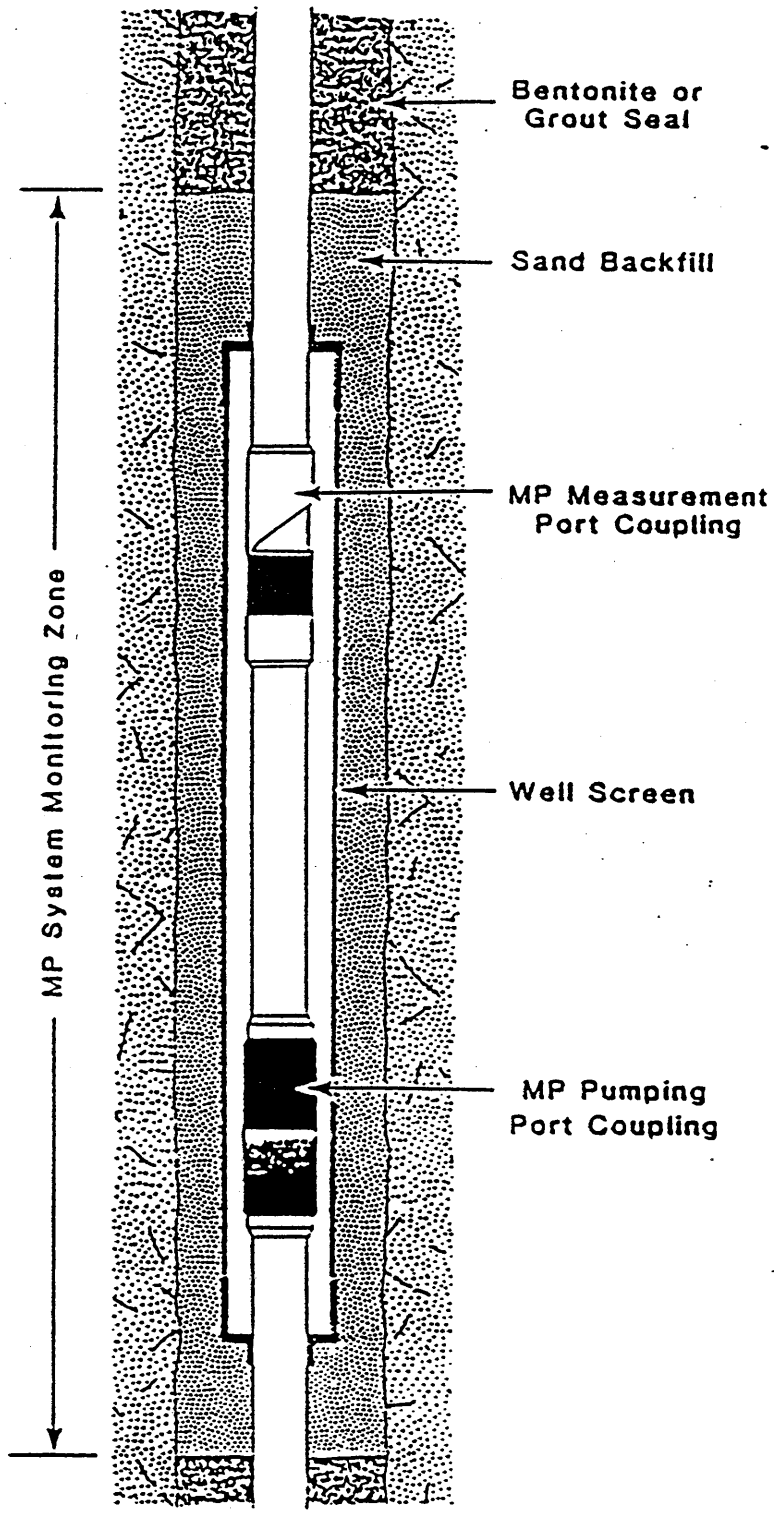

Figure 2. MP System monitoring zone isolated by backfilling

coupling and clamped at either end. This filter will help maintain the

length of the monitoring zone and protect the measurement port valve from fine particles. The filter material should be compatible with the chemistry of the fluids present.

Installation Procedures

Selection of Casing Components

The valved couplings (measurement port couplings and pumping port couplings) allow many monitoring zones to be established in a single drillhole. Horizons of hydrogeological interest are targeted on the basis of the best drillhole geologic and geophysical logs available. An installation log is prepared showing the locations of the casing components. If only fluid pressures are needed, only a measurement port coupling is required in each monitoring zone. If sampling, fluid withdrawal or fluid injection is anticipated, both a pumping port coupling and a measurement port coupling are recommended in each monitoring zone. This is the case illustrated in Figures 1 and 2.

The casing lengths are chosen based on the desired locations of the monitoring zones and sealing elements. This requires an interpretation of the hydrogeologic conditions anticipated in each drillhole. Caliper logs and TV logs can be useful in selecting packer locations.

If consolidation or heave is expected along the borehole axis, telescoping casing sections may be used to minimize the opportunity for compressional or tensile forces to damage the casing.

MP Casing Installation

The downhole MP System components - casing, couplings and packers- are laid out at the site of the proposed monitoring well in accordance with the casing installation log. At that time, any last minute adjustments required to make the positions of the monitoring zones and seals match hydrogeologic details of the drillhole are completed and the appropriate revisions made to the installation log.

Next, the required coupling is attached to the top of each length of casing. The casing layout is checked again for compliance with the installation log. The casing string is then assembled by lowering the casing segments into the drillhole and attaching each successive segment to the adjacent coupling one at a time.

In collapsing soil and poor quality rock, MP casing with packers and screens may be installed inside 3 inch (76 mm) I.D. (H-size) wireline drill rods or equivalent. An H-size drill bit will result in a 4 inch (100 mm) drillhole. In noncollapsing soil and good quality rock, MP casing with packers may be placed in open drillholes from 3 to 4-1/2 inches (76 to 115 mm) in diameter. Casing without packers can be placed in various sizes of drillholes, with or without protective casing, as long as the drillhole diameter (and casing) is compatible with the backfilling method. Good backfilling techniques usually involve the use of one or more tremie pipes. During placement of the MP System casing in holes

where there is a high static water level, clean water may be added to the inside of the MP casing to reduce its buoyancy.

Once the MP casing has been placed in the drillhole, the packers are inflated (see Figure 3) or backfill is placed (see Figure 2). If the MP casing was lowered inside protective steel rods or casing, this casing may be withdrawn all at once or in steps as the packer inflation or backfilling operation proceeds. An incremental casing withdrawal can reduce the opportunity for the drillhole wall to loosen and cave prior to the placement of seals.

Packer Inflation

Figure 3a shows the appearance of the casing packer when it has been placed in a drillhole before inflation. Figure 3b shows how the MP System casing packers are individually inflated using a packer inflation tool. This tool is lowered down the inside of the MP casing and is located in the correct position by the location arm seating in a coupling adjacent to the packer.

Two small packers (tool packers) are inflated. They isolate the short segment of the casing containing the valve for the casing packer. At a pre-set pressure, the tool injection valve opens and water is injected into the casing packer. Figure 3c shows the inflated MP packer after the inflation tool has been removed.

Packer inflation proceeds from the bottom of the hole to the top. There are no permanent inflation lines leading to each packer which would compromise the sealing conditions of adjacent packers. As a result, there is effectively no limit to the number of packers that can be placed in a drillhole apart from the finite limitations of packer length and drillhole depth.

Development of Monitoring Zones

The strategy for developing the monitoring zones may vary depending on site conditions. Figure 4 shows a typical sequence of events in developing measurement zones. Figure 4a shows a typical drillhole environment where the invasion of drilling fluids and/or the circulation of formation fluids has caused ground water adjacent to the drillhole to be nonrepresentative of the formation fluid. Once the casing and annular seals (packer seals are shown in Figure 4b) have been installed, the development of the monitoring zones can proceed. Monitoring zones can be developed individually or several at a time (as shown in Figure 4c). Individual hydrogeologists and hydrochemists may prefer different development techniques depending upon local conditions. However, the development procedures are essentially the same as would be used for a single standpipe piezometer. One procedure which has been successfully used is described below.

1) An acceptable and convenient tracer is added to the drill fluid during drilling.

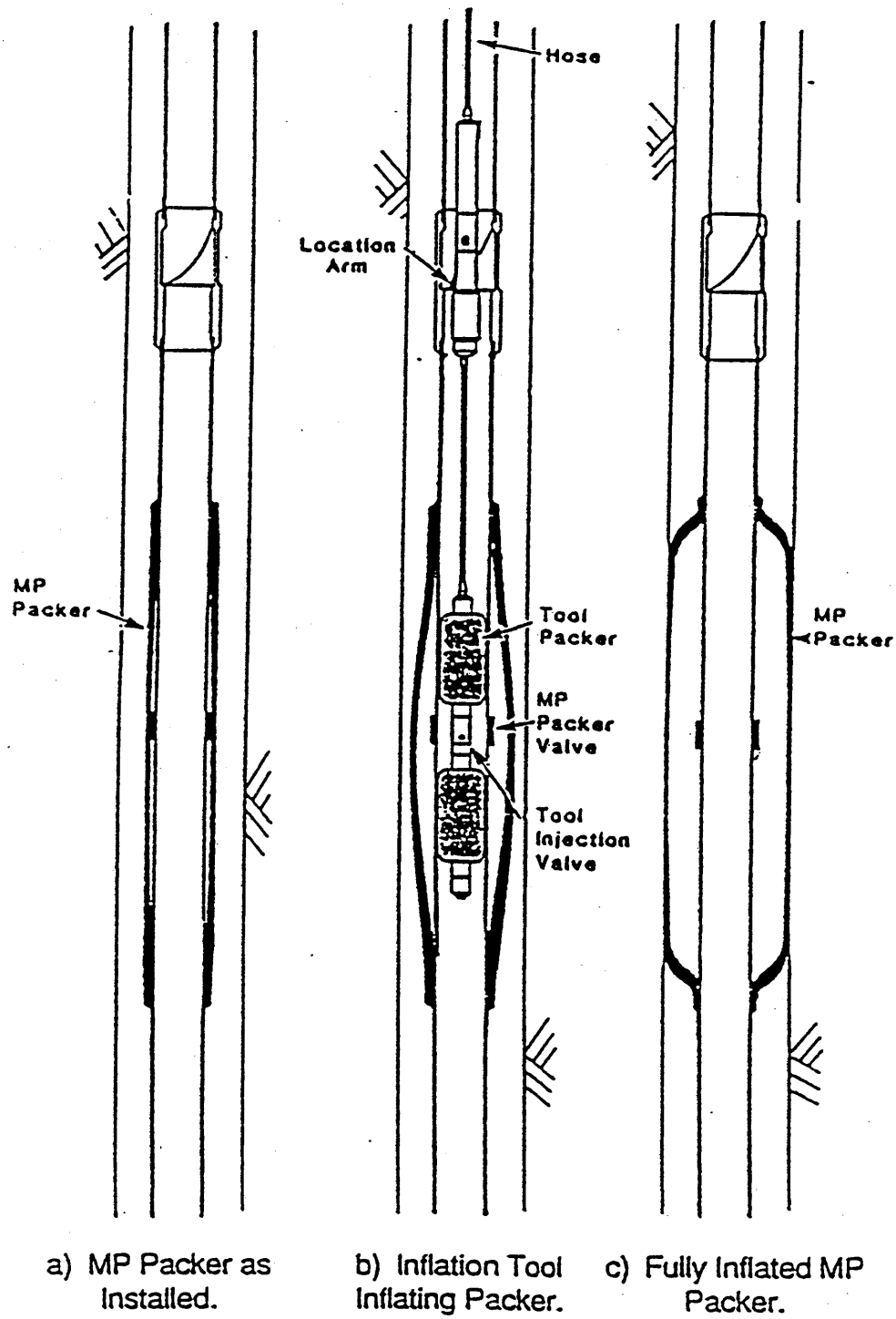

Figure 3. Steps in the inflation of an MP System packer.

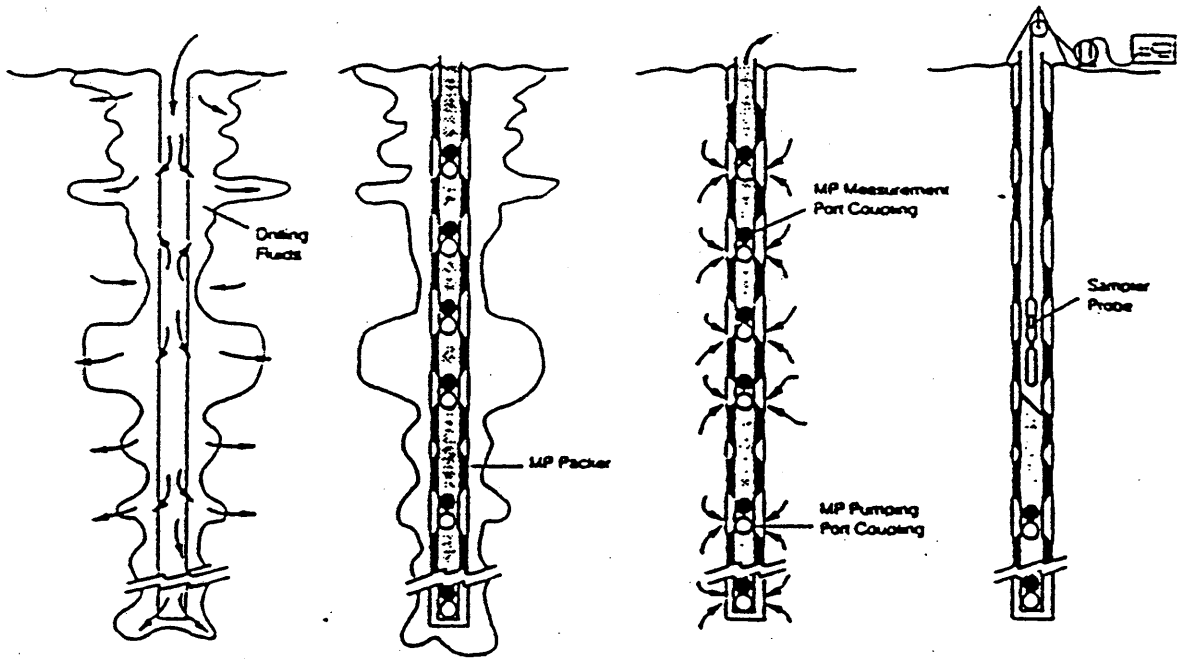

a) Drilling Fluids Introduced. b) Casing Installed and Packers Inflated. c) Drilling Fluids Removed Through Pumping Ports. d) Developed MP System.

Figure 4. Typical sequence of events in developing monitoring zones.

2) After the casing has been installed and the packers have been inflated, the pumping ports in all or a portion of the monitoring zones are opened with the use of an open/close tool.

3) Fluid from the inside of the MP casing is airlifted out of the hole. During this procedure the bottom of the air lift must be kept well above the open pumping port valves. The volume of fluid removed and the pumping time will depend on many factors including: the drilling method, the length of time the hole was left open prior to completion, the hydrogeological conditions in the drillhole, and the accuracy required. The tracer can be helpful in determining when the pumping is completed.

4) Once the pumping has been completed, all the pumping ports except one are closed with the used of the open/close tool. With one pumping port open, the MP casing is hydraulically identical to a standpipe piezometer. A small quantity of fluid may be pumped from inside the MP casing to complete the development of this monitoring zone. Hydrogeologic testing of this zone and its adjacent casing seals can be done at this time. For example, slug tests can be undertaken to obtain transmissivity and storativity values. This pumping port can then be closed, the next one opened and the process repeated.

Following development, the MP system is ready for sampling and for pressure measurements as indicated in Figure 4d.

Operation of the Pumping Ports

To operate the pumping port valve, an open/close tool is used as illustrated in Figure 5. This tool has spring-loaded "jaws" which can be mechanically activated from the surface. The pumping port is shown closed in Figure 5a. To open the valve, the tool is lowered on a wireline with the jaws extended and pointing upward (i.e., so that they will catch on shoulders when the tool is raised). In this condition, the jaws will spring through the couplings as the tool is lowered to just below the desired pumping port coupling. The tool is then pulled up so that the jaws engage the bottom shoulder of the sliding valve. By continuing to pull up on the wireline, the valve can be opened, as in Figure 5b. Once the valve is opened, the jaws can be collapsed into the housing and the tool recovered. With this one valve opened, fluids can be added to or removed from the monitoring interval by injecting or pumping from the MP casing. Other zones may still be monitored in the normal manner using a pressure probe or sampling probe as they will not be hydraulically connected to the interior of the casing.

To close the pumping port coupling, the open/close tool is brought to the surface and the housing is reversed so that the jaws point downward (i.e., the tool will stop on exposed shoulders when the tool is lowered). The tool is lowered to the open pumping port with the jaws collapsed into the housing. Once the tool is located near the pumping port, the jaws are released and the valve is closed by tapping on the top shoulder of the sliding valve with the tool.

Testing and Monitoring

Fluid Pressure Measurements

Fluid pressure measurements can be made at each location in a drillhole where an MP measurement port coupling has been installed. The measurement coupling includes a helical landing ring and a leaf spring valve which is normally closed. The fluid pressure is measured using a pressure probe which incorporates a location arm, a backing shoe, a face seal, and a fluid pressure transducer. These features are shown on Figure 6. The probe is operated on a cable and a readout unit at the surface displays the transducer output. Electric pressure probes also display the temperature of the transducer.

The following procedure is used to make fluid pressure measurements. The probe is lowered to a point below the deepest measurement port to be accessed. The backing shoe is briefly activated (extended). This releases the location arm from within the probe body. The location arm will remain out until the probe is removed from the borehole and the location arm can be manually pushed back into the body. The probe is raised to just above the lowest measurement port coupling and then lowered until the location arm rests on the helical landing ring inside the coupling. The weight of the probe will cause it to rotate into position

Several different containers can be used for samples. Samples can be obtained which have had no contact with the atmosphere. Containers are also available which maintain the sample at the pressure in the formation during recovery from the well and transportation to a laboratory. Other containers allow the sample to depressurize as it is brought to the surface.

Field Quality Control Procedures

There are two distinctive parts to any quality assurance program. The first involves manufacturing and testing procedures which avoid the production or installation of equipment that may result in the collection of erroneous data. The second involves field operational procedures which will ensure that erroneous data are not generated as a result of the failure of borehole components or probes to function as intended. Although the first part is necessary to allow the installation of useful monitoring wells, the second must also be rigorously applied to identify sources of erroneous and misleading results.

The MP System has many unique features for field quality control which clearly separate it from other types of ground water monitoring instrumentation. This is the result of designing components in response to the stringent requirements of users in the fields of nuclear and hazardous waste management.

Quality control tests are carried out at various points during the field use of the MP System and tend to be grouped into three periods: during installation, following installation, and during routine monitoring.

During Installation

During installation of the MP System the following operations form part of the quality control procedures.

Drill core or cuttings and geophysical logs are carefully checked to see that monitoring zones and annular seals are placed at the optimum positions.

Casing components are carefully inspected to see that critical surfaces are undamaged, sealing O-rings are clean and in place, and components are correctly oriented. Serial numbers of port couplings are recorded and their position in the installation noted. These operations tie the field quality control to production test results.

When the MP casing string is lowered into the drillhole, the water level inside the casing can be kept at a different level than the water outside the casing. The level inside can be checked periodically to see that no leaks have developed. Also, each joint can be pressure tested to provide further verification of the integrity of hydraulic seals.

During inflation of each MP packer, incremental volumes and pressures are recorded and plotted. These data allow an evaluation of drillhole conditions and the quality of the annular seal obtained.

Following Installation

Immediately following installation further checks are carried out to verify the operation of the system. These include the initial pressure profile which serves to confirm the operation of the inlet valves of the measurement port couplings. Observed head differences across exterior

casing seals direcly indicate the seal effectiveness. Where such head differences are not observed, the annular seals can be artificially stressed by opening a pumping port in one monitoring zone and withdrawing or adding a slug of water from inside the casing while using the pressure probe to observe the pressure response in the monitoring zone on the other side of the seal.

Packers can be reinflated at any time following installation and the pressure at which further fluid injection occurs can be compared with the final injection pressure recorded during the initial inflation.

During Routine Monitoring

A number of quality control checks are built into the routine monitoring procedures.

When measuring fluid pressures, the pressures measured inside the MP casing at each measurement port are recorded immediately before and after the measurement made through the port. These inside casing values serve a number of purposes: 1) comparison of the two values confirms that the transducer was operating the same way after the reading as before, 2) comparison of the inside values from one set of measurements to the next confirms transducer stability over the intervening time period, and 3) if the head of fluid inside the MP casing is known, a direct field calibration of head of water versus transducer pressure output is obtained. In addition, when the electric pressure probe is used, the temperature of the pressure transducer is recorded and may be used to further correct the transducer output. Any unacceptable changes which show up during monitoring can be checked and corrected by laboratory calibration of the instrument.

Water sampling procedures with the MP System improve quality control because: 1) the short flow path between the formation and the container greatly reduces the surface area contacted by the sample, 2) the contacts between the water sample and the atmosphere are eliminated, and 3) when the water level inside the MP casing can be observed during sampling and no change is noted, this confirms that the sample obtained is from outside the casing. Sampling methods can be varied to compare the effects of atmospheric contact versus no atmospheric contact and maintaining the sample under pressure versus allowing depressurization of the sample.

During water sampling, sample blanks and spikes may be collected using identical procedures for sampling, preservation, handling and shipping. Travel blanks and spikes may also be collected using identical procedures for handling, preservation and shipping. The chemical analyses of samples obtained using the MP System may be compared with those of samples collected by alternate means whenever desired.

Finally, the pumping port may be reopened should further purging appear to be desirable.

For both fluid pressure and water quality data, the MP System can provide corroborative data. That is, a high density of data can be obtained in a single installation so that significant changes in

piezometric pressure and/or water quality can appear as transitions. Thus, neighboring values will corroborate one another rather than indicating abrupt changes which would cause one to question any anomalous values.

Conclusions

The modular nature of the MP System permits a large number of monitoring zones to be accessed through valves placed inside a single closed tube or casing installed in a single drillhole. Such a monitoring system can provide a detailed view of the variation of piezometric pressure and water quality with depth. The valved couplings permit purging of the well before sampling and allow all standard hydrogeologic tests to be carried out in each zone. The valves also permit an evaluation of the condition of exterior casing seals at any time after installation. Casing packers allow multiple seals to be established easily and quickly, providing the required hydraulic isolation of each monitoring zone. The modular design of the downhole components means the number and location of monitoring zones and seals can be modified on the basis of the best information available in the field at the time of installation. The exact depth of monitoring zones need not be known when equipment is purchased.

Field quality control procedures have been established which permit the quality of a well installation and the proper operation of testing and sampling procedures and equipment to be routinely verified. Thus, ground water data and the additional data required to define the quality of the field data can be routinely collected. Furthermore, when a high density of ground water monitoring zones are installed by using multiple-level monitoring wells, the redundant monitoring points can provide important corroborative field data to an extent which is seldom available with single level monitoring wells.

References

Barvenik, M.J. and R.M. Cadwagan. 1983. Multilevel gas drive sampling of deep fractured rock aquifers in Virginia. Ground Water Monitoring Review, v. 3, no. 4, pp. 34-40.

Cherry, J.A. and P.E. Johnson. 1982. A multilevel device for monitoring in fractured rock. Ground Water Monitoring Review, v. 2, no. 3, pp. 41-44.

Davison, C.C. 1984. Monitoring hydrogeological conditions in fractured rock at the site of Canada's Underground Research Laboratory. Ground Water Monitoring Review, v. 4, no. 4, pp. 95-102.

Hanson, E.A. and A.R. Harris. 1974. A ground-water profile sampler. Water Resources Research, v. 10, no. 2, p. 375.

Molz, F.J., J.G. Melville, O. Guven, R.D. Crocker and K.T. Matteson. 1986. Design and performance of single-well tracer tests at the Mobile Site. (Report), Dept. of Civil Engineering, Auburn University, Alabama, 19 pp.

Nazar, A., J. Prieur and D. Threlfall. 1984. An integrated ground water monitoring program using multiple gas driven samples and conventional monitoring wells. Ground Water Monitoring Review, v. 4, no. 4, pp. 43-47.

Novakowski, K.S., P.A. Flavelle, K.G. Raven and E.L. Cooper. 1985. Determination of groundwater flow pathways in fractured plutonic rock using a radioactive tracer. Int. J. Appl. Radiat. Isot., v. 36, no. 5, pp. 399-404.

Patton, F.D. 1979. Groundwater instrumenation for mining projects. Chapter 5 in Proceedings First International Mine Drainage Symposium. Denver, Miller Freeman Publications Inc., San Francisco. pp. 719-748.

Patton, F.D. 1983. The role of instrumentation in the analysis of the stability of rock slopes. Proc. Int. Symp. on Field Measurements in Geomechanics. Zurich, pp. 719-748.

Patton, F.D. 1984. Climate, groundwater pressures and stability analyses of landslides. Proc. IV Int. Symp. on Landslides, v. 3, pp. 43-60.

Patton, F.D. and H.R. Smith. 1986. Design considerations and the quality of data from multiple-level groundwater monitoring wells. Proc. ASTM Symp. on Field Methods for Groundwater Contamination Studies and Their Standardization. Cocoa Beach, Fl., (in press).

Pickens, J.F., J.A. Cherry, G.E. Grisak, W.F. Merritt and B.A. Risto. 1978. A multilevel device for ground-water sampling and piezometric monitoring. Ground Water, v. 16, no. 5, pp. 322-327.

Rehtlane, E.A. and F.D. Patton. 1982. Multiple port piezometers vs. standpipe piezometers: an economic comparison. Proc. 2nd Nat. Symp. on Aquifer Restoration and Ground Water Monitoring. Columbus, Ohio, pp. 287-295.

Smith, H.R., W.H. Black, E.A. Rehtlane and F.D. Patton. 1984. Modular piezometer system. Geotechnical News, v. 2, no. 4, pp. 44-46.

Williams, R.E. 1982. A Guide to the Prevention of Ground Water Contamination by Uranium Mill Wastes. Colorado State Univ., 123 pp.

Biographical Sketches

William H. Black (Westbay Instruments Ltd., 507 E.Third St., North Vancouver, B.C., V7L 1G4)) received his B.A.Sc. degree in geological engineering from the University of British Columbia in 1978. Since then he has been with Westbay Instruments where he has been involved with the marketing, installation and development of ground water monitoring equipment.

H. Rodney Smith (Westbay Instruments Ltd., 507 E.Third St., North Vancouver, B.C., V7L 1G4) received his B.A.Sc degree in geological engineering from the University of British Columbia in 1971 and completed his MASc. degree in mineral engineering from the same university in 1975. In 1980 he received his M.Eng. degree from the University of California, Berkeley. He has worked in geotechnical engineering and hydrogeology and for the past three years has been involved with the marketing, installation and development of ground water monitoring equipment for Westbay Instruments Ltd.

Franklin D. Patton (Westbay Instruments Ltd., 507 E. Third St., North Vancouver, B.C., V7L 1G4) received his B.Sc. in civil engineering from the University of Alberta, and his M.Sc. in civil engineering and Ph.D. in geology from the University of Illinois. He has taught engineering geology at the University of Wisconsin, Madison, the University of Illinois, Urbana, and the University of British Columbia, Vancouver. He is also a consultant in engineering geology and the founder and president of Westbay Instruments Ltd.

Appendix C
U.S. EPA Region IX
Instructions for
Sample Shipping and Documentation

INSTRUCTIONS FOR

SAMPLE SHIPPING

AND DOCUMENTATION

November 1997

Quality Assurance Management Section
U. S. EPA Region 9
San Francisco, CA

TABLE OF CONTENTS

1.0 GENERAL **1**
1.3DISTRIBUTION OF COPIES 1

2.0 SAMPLE SHIPMENTS **2**

3.0 CLP ANALYTICAL SERVICES (CLPAS) TRAFFIC REPORT/CHAIN-OF-CUSTODY FORMS FOR ORGANIC AND INORGANIC ANALYSES **3**
3.1CASE DOCUMENTATION 3
3.2HEADER INFORMATION 4
3.3SAMPLE DOCUMENTATION 5
3.4"SHIPMENT FOR CASE COMPLETE (Y/N)" 7
3.5"PAGE 1 OF __" 7
3.6"SAMPLE USED FOR SPIKE AND/OR DUPLICATE" 7
3.7"ADDITIONAL SAMPLER SIGNATURES" 7
3.8"CHAIN OF CUSTODY SEAL NUMBER" 7

4.0 REGIONAL ANALYTICAL PROGRAM (RAP) CHAIN-OF-CUSTODY FORMS **7**
4.1CASE DOCUMENTATION 7
4.2SAMPLE DOCUMENTATION 8
4.3AIRBILL NUMBER 9
4.4"REMARKS" BOX 9

5.0 SAMPLE BOTTLES **9**

6.0 FIELD QA/QC SUMMARY FORM **10**

FIGURES

TYPE OF ACTIVITY ..... Appendix A
CLP SAMPLE NUMBERS ..... Appendix B
ORGANIC TRAFFIC REPORT & CHAIN OF CUSTODY RECORD ..... Attachment 1
INORGANIC TRAFFIC REPORT & CHAIN OF CUSTODY RECORD ..... Attachment 2
(REGIONAL) CHAIN OF CUSTODY RECORD ..... Attachment 3
FIELD QA/QC SUMMARY FORM ..... Attachment 4
SAMPLE SHIPMENT INFORMATION ..... Attachment 5

1.0 GENERAL

1.1 When all paperwork has been completed by the sampler and samples are ready to be shipped, place the laboratories' copies in a plastic bag and tape it to the inside of the lid of the cooler(s). For CLP Analytical Services, Contract Laboratory Analytical Services Support's (CLASS) copies must be submitted within 5 days of sampling. The Region's copies may be submitted at that time or at the end of the sampling event. If the sampling event covers an extended length of time, the Region's copies must be submitted weekly. (Note: The RSCC coordinator will not forward CLASS's copies. They will be returned to the sampler.)

QAMS address:

U.S. EPA Region 9
Quality Assurance Program (PMD-3)
75 Hawthorne Street
San Francisco, CA 94105
Attn.: RSCC Coordinator

CLASS address:

Contract Laboratory Analytical Services Support
DynCorp
2000 Edmund Halley Dr.
Reston, VA 20191-3436
Attn.: Region 9 Coordinator

1.2 For analyses performed by the Regional Laboratory, DO NOT send any copies of the paperwork to the Contract Laboratory Analytical Services Support (CLASS).

1.3 DISTRIBUTION OF COPIES

1.3.1 CLP ANALYTICAL SERVICES

1.3.1.1 ORGANIC TRAFFIC REPORT/CHAIN-OF-CUSTODY FORM

a. Blue (original) copy to QAMS, Region 9
b. Pink (second) copy to CLASS
c. White (third) and Yellow (fourth) copies accompany samples to laboratory
d. Photocopy for sampler's files

1.3.1.2 INORGANIC TRAFFIC REPORT/CHAIN-OF-CUSTODY FORM

a. Green (original) copy to QAMS, Region 9
b. Pink (second) copy to CLASS
c. White (third) and Yellow (fourth) copies accompany samples to laboratory
d. Photocopy for sampler's files

1.3.2 REGIONAL ANALYTICAL PROGRAM (RAP):

1.3.2.1 RAP CHAIN-OF-CUSTODY FORM

a. White (original) copy to laboratory with samples

b. Pink copy to QAMS, Region 9
c. Photocopy for sampler's file

1.3.3 FIELD QA/QC SUMMARY FORM

a. Original to QAMS, Region 9
b. Photocopy for sampler's files

2.0 SAMPLE SHIPMENTS

2.1 Calling in shipments to the RSCC coordinator

2.1.1 Call the EPA Regional Sample Control Center (RSCC) coordinator on a daily basis, even if no shipments were made. The RSCC coordinator may be reached at (415) 744-1498.

2.1.2 Try to stick to the sampling schedule. If this is not possible, let the RSCC coordinator know immediately so other arrangements can be made.

2.1.3 Notify the RSCC coordinator within 12 hours of sample shipments. Calling in sample shipments to the RSCC coordinator is MANDATORY. Provide the following information to the RSCC coordinator:

1. Case number
2. Name of Laboratory
3. Date of shipment
4. Carrier and airbill number
5. Number of samples shipped by matrix and analysis type
6. Number of coolers shipped
7. Information on completions, changes, delays, etc.

2.2 Special shipments (i.e., Saturday delivery/pickup)

2.2.1 General - Friday shipments for Saturday delivery/pickup must be called in by noon (12:00 pm) Friday. This is to enable the RSCC coordinator to pass the information on to CLASS or to the laboratories. Samplers may not contact the laboratories directly. (Laboratories do not have to accept notification of delivery of samples from sources other than CLASS or RSCC.)

2.2.2 Regional Laboratory - The Regional Laboratory is located within a gated compound that is closed on weekends and holidays. Designated laboratory personnel will pickup the samples at the Federal Express office, take them to the laboratory and place them inside the refrigerators. If the following shipping instructions are not followed, an unsuccessful delivery attempt will be made to the Regional Laboratory. In addition, the staff member on call will not be able to pickup the samples, since they will not be at the Federal Express office.

To ensure that samples are held at the Federal Express office, please be sure to complete the following items:

1. On the lower left side of the Federal Express airbill, "For HOLD at FedEx Location check here," mark the box for "Hold Saturday."

2. In Section 3 of the airbill, print the following Federal Express office address:

1600 63rd Street
Emeryville, CA 94608

Federal Express may affix stickers to the coolers. Be sure they read "SATURDAY FEDERAL EXPRESS CENTER HOLD" or something similar. Under no circumstances should a "SATURDAY DELIVERY" sticker be placed on the cooler.

If a carrier other than Federal Express is used, please call the RSCC coordinator (415-744-1498) to make special arrangements.

2.2.3 Most CLP laboratories and other commercial laboratories contracted by QAP are staffed on Saturdays. Therefore, coolers can be delivered directly to these laboratories. In this case, the "SATURDAY DELIVERY" sticker should be placed on the cooler.

2.2.4 Laboratories may request advance notification of the arrival of certain types of samples, such as samples with very short holding times (e.g., Cr +6) that will be hand delivered to the laboratory. Required deadlines for notification of sample shipments in these special cases will be determined on a case by case basis. The RSCC coordinator will inform the samplers as to when notification of sample delivery is required (e.g., by noon on the day samples will be delivered). This is to facilitate the laboratory(ies) having personnel available to analyze the samples as soon as they arrive.

2.3 Cooler Return

Samplers are responsible for providing laboratories with a means to return coolers to their place of origin. The easiest way is to enclose an airbill with return shipping instructions (i.e., the address filled in as to where the coolers are to be returned to) and an account number to charge shipping costs to.

Samplers using EMFAC coolers should refer to Section 7 of the EMFAC Users Guide for cooler return instructions. EPA contractors should contact their EPA Project Officer for details on acceptable modes of cooler return and shipping cost reimbursement.

3.0 CLP ANALYTICAL SERVICES (CLPAS) TRAFFIC REPORT/CHAIN-OF-CUSTODY FORMS FOR ORGANIC AND INORGANIC ANALYSES

3.1 CASE DOCUMENTATION

Complete this form when collecting CLPAS samples. See Attachments 1 through 3 for examples.

Enter the CLPAS case number in the box(es) located in the upper right corner of the form. CLPAS case numbers have the format "xxxxx" (e.g., 18123).

3.2 HEADER INFORMATION

3.2.1 Box 1 - PROJECT CODE/SITE INFORMATION

Enter the Project Code (i.e., $F), Site Name, City, State, Site Spill ID. **(Note: the information entered here does not go through to the laboratory's copies.)**

If sampling is not under the Superfund program, enter the Account code (account to be billed), any Regional Information and the name of the program (e.g., RCRA) in the box titled "Non-Superfund program."

3.2.2 Box 2 - REGIONAL INFORMATION

Enter the Region number, the name of your sampling company, and your name and signature in the designated spaces.

3.2.3 Box 3 - TYPE OF ACTIVITY

Check the appropriate box(es) for the type of activity for this sampling event. See Appendix A for acronym definitions.

3.2.4 Box 4 - SHIPPING INFORMATION

Enter the date shipped, the carrier (e.g., Federal Express, Airbourne, etc.) and the air bill number in the appropriate spaces.

3.2.5 Box 5 - SHIP TO

Enter the laboratory name, full address and laboratory contact (e.g., Sample Custodian).

3.2.6 Box 6 - PRESERVATIVE

This box provides a list of commonly used preservatives. Enter the appropriate preservative in Column D. If you enter "5" on the Organic Traffic Report or "7" on the Inorganic Traffic Report indicating "Other", specify the preservative used at the bottom of the "Sample Documentation" area.

If you are using more than one type of preservative, you may either note the preservatives in the box specifically under the requested analyses (e.g., in the Cyanide box enter "2") or list them, separated by commas, in the same order as the checked sample analyses. (Alternatively, the analyses may be listed on separate lines.)

3.2.7 Box 7 - SAMPLE DESCRIPTION

This box provides a list of the description/matrices of the samples that are collected. Enter the appropriate description in Column A.

3.3 SAMPLE DOCUMENTATION

3.3.1 SAMPLE NUMBERS

Carefully transcribe the CLPAS sample numbers from the printed labels onto the Organic or Inorganic Traffic Report/Chain-of-Custody forms in the column labeled "CLP Sample Numbers".

CLPAS sample numbers have the following formats: YX123 for organic and MYX123 for inorganic samples. See Appendix B for examples.

3.3.2 Column A - SAMPLE DESCRIPTION

Enter the appropriate sample description code from Box 7.

Note: Item #6 "Oil" and Item #7 "Waste" are for RAP projects only. Do not ship oily samples or waste samples without making prior arrangements with the EPA.

3.3.3 Column B - CONCENTRATION

Enter "L" for low and "M" for medium concentration samples. (Prior arrangements must have been made with the ESAT RSCC coordinator, CLASS and the laboratories accepting the samples before shipping medium concentration samples. At this time, high concentration samples must be scheduled through the RAP system.)

NOTE: Medium concentration samples must be shipped in metal cans.

3.3.4 Column C - SAMPLE TYPE COMPOSITE/GRAB

Enter the type of sample you collected. A composite is a sample composed of more than one discrete sample. A grab is a discrete sample.

3.3.5 Column D - PRESERVATIVE USED

Enter the preservative used from Box 6.

3.3.6 Column E - CLPAS ANALYSIS

Check the analytical fractions requested for each sample, for example, VOAs, BNAs and Pesticides/PCBs are for low/medium concentration organics. Total metals and cyanide are for low/medium concentration inorganics.

NOTE: If dissolved metals are requested, a note must be added indicating that the samples have been field filtered and that digestion is required. See Attachment 2 for an example.

3.3.7 Column F - REGIONAL SPECIFIC TRACKING NUMBERS OR TAG NUMBERS

Region 9 does not issue tracking numbers or tag numbers. Samplers may use this column for sampler specific tracking numbers or for "Special Instructions". If you choose to use this as "Special Instructions", be sure to note, at the bottom of the "Sample Documentation" area, what the special

handling is. The number and type of containers could be entered here. (e.g., 3-40 mL, 6-1L)

3.3.8 Column G - STATION LOCATION NUMBER

Enter the station location in the space provided.

3.3.9 Column H - MO/DAY/YEAR/TIME OF SAMPLE COLLECTION

Record the month, day, year and time (use military time, e.g., 1600 = 4:00 pm) of sample collection.

3.3.10 Column I - SAMPLER INITIALS

Enter your initials.

3.3.11 Column J - CORRESPONDING CLP ORGANIC/INORGANIC SAMPLE NUMBER

Enter the corresponding CLP sample number for organic or inorganic CLPAS analysis.

3.3.12 Column K - DESIGNATED FIELD QC

NOTE: This column is NOT to be used for the designated laboratory QC samples. **Information entered here is not reproduced onto the laboratories' copies.**

Enter the appropriate qualifier as listed below for "Blind" Field QC samples in this column. (NOTE: All samples must have a qualifier.)

Blind Field QC	Qualifier
Blind Blanks (field, etc.)	B
Blind Field Duplicates	D
Blind Field Spikes	S
Blind PE Samples	PE
All other field samples	--

"B" = These are blanks and include trip blanks (T), field blanks (F) and equipment blanks (E). Blanks may be further identified by the letter in parenthesis. For example, B(T) indicates that the sample is a trip blank.

"D" = These are field duplicates. Do not include samples designated as laboratory duplicates. The primary sample is identified with "--" and the duplicate is given "D" in column K. In addition, the station locations should also identify the primary and duplicate samples. For example, MW-1 is the primary sample and MW-1B is the duplicate sample.

"S" = These are spiked field samples and are generated by field personnel

"PE" = These are performance evaluation samples. They are spiked samples but are not field samples. They are usually prepared by other than field personnel.

"--" = All other samples not designated as blind field QC samples are given this qualifier.

3.4 "SHIPMENT FOR CASE COMPLETE (Y/N)"

This should reflect the status of the samples scheduled to be shipped to a laboratory for a specific case. Only when ALL samples scheduled for shipment to a laboratory for a specific case have been shipped is the case complete.

3.5 "PAGE 1 OF __"

Enter the number of Traffic Report/Chain-of-Custody Record form(s) enclosed in each cooler. The form(s) accompanying each cooler must list only those samples contained in that cooler.

3.6 "SAMPLE USED FOR SPIKE AND/OR DUPLICATE"

Enter the sample number of the sample designated for laboratory spike and/or duplicate analysis. This is also known as the Laboratory QC sample. This sample should be included in the first shipment to the laboratory and in the first shipment for each subsequent sample delivery group (SDG).

DO NOT enter samples designated as blind field duplicates in this block.

3.7 "ADDITIONAL SAMPLER SIGNATURES"

Record additional sampler signatures that are different from that in Box 2.

3.8 "CHAIN OF CUSTODY SEAL NUMBER"

Enter the Chain of Custody Seal Number used to seal the cooler, if applicable.

3.9 Instructions summarizing CLP sample volumes, packaging and shipment reporting requirements are printed on the back of the Traffic Reports.

4.0 REGIONAL ANALYTICAL PROGRAM (RAP) CHAIN-OF-CUSTODY FORMS

4.1 CASE DOCUMENTATION

Complete this form when collecting RAP samples. See Attachment 4 for an example.

4.1.1 PROJECT NUMBER

Enter the RAP case number in this box.

4.1.2 PROJECT NAME

Leave this space blank.

4.1.3 SAMPLERS (Signature)

Record all sampler signatures in this box.

4.2 SAMPLE DOCUMENTATION

4.2.1 SAMPLE NUMBERS

No sample numbers are provided. Samplers should designate their own numbers and enter them in the space labeled STA.NO.

4.2.2 DATE

Enter the month, day and year the sample was collected in the "DATE" column.

4.2.3 TIME

Enter the time (using military time) in the "TIME" column.

4.2.4 COMP/GRAB

Check the kind of sample collected in the composite or grab column.

4.2.5 STATION LOCATION

Enter the sample site location in the space provided.

4.2.6 SAMPLE MATRIX

For each sample, enter the appropriate sample matrix description in the right third portion of the "STATION LOCATION" column.

4.2.7 NO. OF CONTAINERS

Enter the total number of sample containers collected for each matrix at each station location.

4.2.8 SAMPLE ANALYSES

There are six slanted columns to be used to specify the kind of analysis to be performed by the laboratory. Enter the appropriate analysis in each column. Mark the box of the appropriate analysis for each sample collected.

4.2.9 REMARKS

The items listed below are to be included in this area on the appropriate sample line.

4.2.9.1 CONCENTRATION

Enter "L" for low concentration, "M" for medium concentration and "H" for high concentration.

NOTE: Medium and high concentration samples must be shipped in metal cans.

4.2.9.2 PRESERVATIVE USED

Enter the preservative used.

If more than one type of preservative is used for a sample, separate the preservative references with commas. The sequence of the reference numbers must follow the sequence of the requested "RAP Analysis" parameters that are recorded in the analysis columns.

4.2.9.3 SAMPLE USED FOR SPIKE AND/OR DUPLICATE

Enter the sample number designated for spike and/or duplicate analysis. This is also known as the Laboratory QC sample. This sample should be included in the first shipment to the laboratory and in the first shipment for each subsequent sample delivery group (SDG).

4.3 AIRBILL NUMBER

The airbill number should be entered on the first signature line, in the box marked "Received by: (Signature)".

4.4 "REMARKS" BOX

Located in the lower right hand corner of the Chain of Custody is a box labeled "Remarks". The following items should be entered there.

4.4.1 CHAIN OF CUSTODY SEAL NUMBER

Enter the Chain of Custody Seal Number used to seal the coolers, if applicable, in the box labeled "Remarks", in the lower right-hand corner.

4.4.2 LABORATORY NAME

Enter the Laboratory name in the box labeled "Remarks", in the lower right-hand corner.

4.4.3 SHIPPING COMPLETE?

Enter "yes, shipping is complete" or "No, shipping is not complete" in the box labeled "Remarks", in the lower right-hand corner.

4.4.4 CARRIER

Enter the carrier (e.g., "Fed Ex") in the box labeled "Remarks", in the lower right-hand corner.

5.0 SAMPLE BOTTLES

5.1 Sample bottles be labeled with the following information:

a. Case number
b. Date/Time of collection
c. Matrix/Concentration
d. Station Location
e. Sample number (CLP or sampler designated)
f. Analysis
g. Preservative

5.2 Pre-printed, self-adhesive labels are provided for CLPAS Organic, CLPAS Inorganic and RAP samples.

5.2.1 Transcribe the appropriate sample number onto the corresponding bottle label and/or affix the sample number label onto the bottle.

5.2.2 Destroy all unused labels or return them to the ESAT RSCC coordinator. DO NOT use them for future samplings. New sample numbers will be assigned.

6.0 FIELD QA/QC SUMMARY FORM

6.1 Complete one form per laboratory per matrix for each sampling event. For long term projects, complete a form(s) after each week of sampling. Complete the header portion even if no QA/QC samples were provided.

6.2 Complete all applicable entries. Please use the appropriate sample numbers for each laboratory. (e.g., for the laboratory performing CLPAS organics, use the CLP organic sample numbers, YX123, etc. For the laboratory performing RAP analyses, use the RAP sample numbers, SY0123, etc.) Please do not use station locations. If a laboratory is performing more than one type of analysis, list all applicable sample numbers.

6.3 This form is very important for validation purposes. The validators will compare the results of duplicates and assess the quality of blanks, if they know which samples they are. Failure to provide this information will delay the completion of validation.

Appendix A

TYPE OF ACTIVITY

Check the box which describes the funding lead for this sampling event:

Funding Lead

SF = Superfund
PRP = Potentially Responsible Party
ST = State
FED = Federal

Check one or more boxes, as appropriate, which describe the task of this sampling event:

Pre-Remedial

PA = Preliminary Assessment
SSI = Screening Site Investigation
LSI = Listing Site Investigation

Remedial

RIFS = Remedial Investigation Feasibility Study
RD = Remedial Design
O&M = Operations and Maintenance
NPLD = National Priorities List

Removal

CLEM = Classic Emergency
REMA = Removal Assessment
REM = Removal
OIL = Oil Response
UST = Underground Storage Tank Response

Appendix B

CLP SAMPLE NUMBERS

Each sample is assigned a unique sample number. A "sample" is defined as follows:

- one matrix, e.g., water, soil/sediment, fish, etc.
- one station location
- one analytical program, e.g., CLPAS organics, CLPAS inorganics or a RAP analysis
- one laboratory

Sample numbers for CLPAS analyses:

- CLPAS Organic sample numbers consist of five alpha-numerics, always beginning with "Y"

  Example - YJ386

- CLPAS Inorganic sample numbers consist of six alpha-numerics, always beginning with "MY"

  Example - MYG528

Examples for assigning sample numbers:

- CLPAS Volatiles & CLPAS Pesticides/PCBs receive the **SAME SAMPLE NUMBER**, if the samples are:

  - the same matrix
  - part of the same analytical program, e.g., CLPAS organics
  - from the same station location
  - going to the same laboratory

- CLPAS Volatiles & CLPAS Pesticides/PCBs receive **DIFFERENT SAMPLE NUMBERS**, if the samples are:

  - the same matrix
  - part of the same analytical program, e.g., CLPAS organics
  - from the same station location
  - going to different laboratories

- CLPAS Volatiles & CLPAS Metals receive **DIFFERENT SAMPLE NUMBERS**, if the samples are:

  - the same matrix
  - part of different analytical programs, e.g., CLPAS organics & CLPAS inorganics
  - from the same station location
  - going to the same laboratory

ATTACHMENT 1

EPA

United States Environmental Protection Agency
Contract Laboratory Program Sample Management Office
PO Box 818 Alexandria, VA 22313
703-557-2490 FTS 557-2490

Organic Traffic Report & Chain of Custody Record

(For Organic CLP Analysis)

SAS No. (if applicable)

Case No. 17235

1. Project Code: SF
Account Code:
2. Region No.: 9
Sampling Co.: Ace
4. Date Shipped: 1-7-94
Carrier: Fed. Express
Airbill Number: 0912345678
Regional Information:
Sampler (Name): Gail Jones
Non-Superfund Program:
Sampler Signature: Gail Jones
5. Ship To: Alpha Lab, 123 Pine Ave, NY, NY 10001
ATTN: John Doe
Site Name: Toxic Dump
City, State: Smallville CA
Site Spill ID: 99

3. Type of Activity: Lead / Pre-Remedial / Remedial / Removal
SF [X] PRP [ ] ST [ ] FED [ ] PA [ ] SSI [ ] LSI [ ] RIFS [X] RD [ ] RA [ ] O&M [ ] NPLD [ ] CLEM [ ] REMA [ ] REM [ ] DIL [ ] UST [ ]

6. Preservative (Enter in Column D)
1. HCl
2. HNO3
3. $NaHSO_4$
4. H_2SO_4
5. Other (Specify)
6. Ice only
N. Not preserved

7. Sample Description (Enter in Column A)
1. Surface Water
2. Ground Water
3. Leachate
4. Rinsate
5. Soil/Sediment
6. Oil (High only)
7. Waste (High only)
8. Other (Specify)

CLP Sample Numbers (from labels)	A Enter # from Box 7	B Conc. Low Med High	C Sample Type: Comp./Grab	D Preservative from Box 6	E RAS Analysis: VOA	BNA	Pest/PCB	High only ARO/TOX	F Regional Specific Tracking Number or Tag Numbers	G Station Location Number	H Mo/Day/Year/Time Sample Collection	I Sampler Initials	J Corresp. CLP Inorg. Samp. No.	K Enter Appropriate Qualifier for Designated Field QC (B = Blank S = Spike D = Duplicate PE = Perform. Eval. — = Not a QC Sample)
YJ126	2	L	6			X				MW-1	1-6-94 0900	gr	MYG001	—
YJ127	2	L	6			X				MW-2	1-6-94 1000	gr	MYG003	—
YJ128	2	L	6			X				MW-3	1-6-94 1100	gr	MYG005	—

Shipment for Case complete? (Y/N): N
Page 1 of 1
Sample used for a spike and/or duplicate: YJ127
Additional Sampler Signatures:
Chain of Custody Seal Number:

CHAIN OF CUSTODY RECORD

Relinquished by: (Signature)	Date / Time	Received by: (Signature)	Relinquished by: (Signature)	Date / Time	Received by: (Signature)
Gail Jones	1-7-94 1600	0912345678			
Relinquished by: (Signature)	Date / Time	Received by: (Signature)	Relinquished by: (Signature)	Date / Time	Received by: (Signature)
Relinquished by: (Signature)	Date / Time	Received for Laboratory by: (Signature)	Date / Time	Remarks	Is custody seal intact? Y/N/none

Split Samples: [ ] Accepted [ ] Declined (Signature)

EPA Form 9110-2 (Rev. 8-91) Replaces EPA Form (2075-7), previous edition which may be used

ATTACHMENT 2

EPA United States Environmental Protection Agency
Contract Laboratory Program Sample Management Office
PO Box 818 Alexandria, VA 22313
703-557-2490 FTS 557-2490

Inorganic Traffic Report & Chain of Custody Record
(For Inorganic CLP Analysis)

SAS No. (if applicable)

Case No. 17235

1. Project Code: $F
Account Code:
2. Region No.: 9
Sampling Co.: Ace
4. Date Shipped: 1-7-94
Carrier: Fed. Express
Airbill Number: 0912345699
Regional Information:
Sampler (Name): Gail Jones
Non-Superfund Program:
Sampler Signature: Gail Jones
5. Ship To: Beta Labs, Inc. 455 Maple Ave. Allanta, GA 04507
ATTN: Mary Smith
Site Name: Toxic Dump
City, State: Smallville CA
Site Spill ID: 99

3. Type of Activity: Lead: SF [X], PRP [ ], ST [ ], FED [ ]; Pre-Remedial: PA [ ], SS [ ], LSI [ ]; Remedial: RIFS [X], RD [ ], RA [ ], O&M [ ], NPLD [ ]; Removal: CLEM [ ], REMA [ ], REM [ ], OIL [ ], UST [ ]

6. Preservative (Enter in Column D): 1. HCl 2. HNO3 3. NaOH 4. H_2SO_4 5. $K_2CR_2O_7$ 6. Ice only 7. Other (Specify) N. Not preserved

7. Sample Description (Enter in Column A): 1. Surface Water 2. Ground Water 3. Leachate 4. Rinsate 5. Soil/Sediment 6. Oil (High only) 7. Waste (High only) 8. Other (Specify)

CLP Sample Numbers (from labels)	A Enter # from Box 7	B Conc. Low Med High	C Sample Type: Comp./Grab	D Preservative from Box 6	E - RAS Analysis: Metals Total	Metals Dissolved	Cyanide	Low Conc. only Nitrate/Nitrite	Low Conc. only Fluoride	High only pH	High only Conductivity	F Regional Specific Tracking Number or Tag Numbers	G Station Location Number	H Mo/Day/Year/Time Sample Collection	I Sampler Initials	J Corresp. CLP Org. Samp. No.	K Enter Appropriate Qualifier for Designated Field QC (B = Blank S = Spike D = Duplicate PE = Perform. Eval. — = Not a QC Sample)
MYG001	2	L	G	23	X		X						MW-1	1-6-94 0900	JB	YJ126	—
MYG002	2	L	G	2		X						A	MW-1	1-6-94 0915	JB	YJ126	—
MYG003	2	L	G	23	X		X						MW-2	1-6-94 1000	JB	YJ127	—
MYG004	2	L	G	2		X						A	MW-2	1-6-94 1015	JB	YJ127	—

A = Field Filtered, 0.45 micron
Digestion required for all dissolved samples

Shipment for Case complete? (Y/N) Y
Page 1 of 1
Sample used for a spike and/or duplicate: MYG003 + MYG004
Additional Sampler Signatures: John Brown
Chain of Custody Seal Number:

CHAIN OF CUSTODY RECORD

Relinquished by: (Signature)	Date / Time	Received by: (Signature)	Relinquished by: (Signature)	Date / Time	Received by: (Signature)
Gail Jones	1-7-94 1600	0912345699			
Relinquished by: (Signature)	Date / Time	Received by: (Signature)	Relinquished by: (Signature)	Date / Time	Received by: (Signature)
Relinquished by: (Signature)	Date / Time	Received for Laboratory by: (Signature)	Date / Time	Remarks Is custody seal intact? Y/N/none	

Split Samples [ ] Accepted (Signature) [ ] Declined

5-91 Replaces EPA Form (2075-6), previous edition which may be used

ENVIRONMENTA 10TECTION AGENCY
Office of Enforcement

REGION
75 Hawthorne Street
San Francisco, California 94105

CHAIN OF CUSTODY RECORD

PROJ. NO.: R94512
PROJECT NAME:
SAMPLERS: (Signature) K. Pettit

STA. NO.	DATE	TIME	COMP.	GRAB	STATION LOCATION	MATRIX	NO. OF CONTAINERS	LOW LEVEL VOA	SULFIDE	NITRATE/NITRITE				REMARKS
SYD000	7/21/94	1000		✓	FRONT - MW	GW	4	X	X	X				VOA'S PRESERVED W/ HCL SULFIDE PRESERVED W/NaOH + Zn ACETATE
SYD001	7/21/94	1030		✓	BACK - MW	GW	4	X	X	X				
SYD002	7/21/94	1300		✓	EAST - MW	GW	4	X	X	X				LABQC
SYD003	7/21/94	1320	✓		EAST - S	SOIL	1			X				LABQC
														ALL SOIL AND GW SAMPLES ARE LOW CONCENTRATION

Relinquished by: (Signature)	Date / Time	Received by: (Signature)	Relinquished by: (Signature)	Date / Time	Received by: (Signature)
K. Pettit	7/22/94 1600	1234567890			
Relinquished by: (Signature)	Date / Time	Received by: (Signature)	Relinquished by: (Signature)	Date / Time	Received by: (Signature)
Relinquished by: (Signature)	Date / Time	Received for Laboratory by: (Signature)	Date / Time	Remarks LAB: REGION 9 SHIPPING IS COMPLETE CARRIER: FED EX, 7/22/94 CUSTODY SEAL #: 12345	

Distribution: Original Accompanies Shipment; Copy to Coordinator Field Files

04/13/99 TUE 13:14 FAX 1 415 744 1476 EPA REG 9 004

ATTACHMENT 43

ATTACHMENT ~~8~~ 4

FIELD QA/QC SUMMARY FORM

Instructions: Complete one form per laboratory and per matrix for each sampling eve

Date: 1-10-94
Sampler: Gail Jones
Office: ACE
Phone: (415) 456-7890

Site: Toxic Dump
Case/SAS #: 17235
Laboratory: Beta Labs, Inc

Matrix: (check one)
X Groundwater
___ Surface Water
___ Surface Soil
___ Subsurface Soil
___ Air
___ Other

I. BLANKS

Sample #	Type (circle one)	Date Collected
MVG 021	(Equip) / Field / Travel	1-9-94
	Equip / Field / Travel	
	Equip / Field / Travel	
	Equip / Field / Travel	
	Equip / Field / Travel	
	Equip / Field / Travel	
	Equip / Field / Travel	
	Equip / Field / Travel	
	Equip / Field / Travel	
	Equip / Field / Travel	
	Equip / Field / Travel	
	Equip / Field / Travel	

II. BACKGROUND SAMPLES

Sample #	Date Collect

III. LAB QC SAMPLES

Sample #	Date Collec
MVG 003	1-6-94
MVG 004	1-6-94

IV. DUPLICATES

Sample #	Matches Sample #	Date Collected	Type (circle one)
MVG 015	MVG 016	1-9-94	a / (b) / c / d
			a / b / c / d
			a / b / c / d
			a / b / c / d
			a / b / c / d
			a / b / c / d

a= composite sp
b= consecutive
c= colocated
d= consecutive soil sleeve

V. Checklist of Field Problems Encountered

	Sample # / Date(s) of Occurrence / Comments
X None	
___ Pumping Equipment Problems	
___ Sample Filtering Problems	
___ Less Than Required Sample Volume	
___ Low Flow/Recharge Rates	
___ Preservation Problems	
___ Samples Not Shipped in 24 hrs.	
___ Federal Express Delay	
___ Other	

ATTACHMENT 5

SAMPLE SHIPMENT INFORMATION

DATE: _____ # OF PAGES: _____

TO: GAIL JONES, RSCC COORDINATOR FROM: _____

CO.: EPA REGION 9 (P-3-2) CO.: _____

PHONE #: (415) 744-1436 PHONE #: _____

FAX #: (415) 744-1476 FAX #: _____

CASE #: _____ LAB NAME: _____

COOLERS: _____ SHIPPING DATE: _____

CARRIER: _____ AIRBILL #: _____

# SAMPLES	CONC/MATRIX	ANALYSES

Is this sampling event complete with this shipment? Y N

COMMENTS: _____

CASE #: _____ LAB NAME: _____

COOLERS: _____ SHIPPING DATE: _____

CARRIER: _____ AIRBILL #: _____

# SAMPLES	CONC/MATRIX	ANALYSES

Is this sampling event complete with this shipment? Y N

COMMENTS: _____

Revised Daily Sample Shipment Notification Procedure (Effective 6/1/02)

This revision supercedes all previous sample shipment notification instructions. All Friday shipments should be called into the respective points of contact by 12:00 PM Friday.

For EPA Region 9 Laboratory:

Call in shipment information to the Sample Receiving Telephone at:
(510) 412-2377

If there is a sample shipment related question or emergency, then press 0 for the Region 9 Laboratory Receptionist.

For EPA Contract Laboratory Program:

If email is available send shipping information to Rich Freitas at:
freitas.richard@epa.gov
and cc to:
brickner.carl@epa.gov
holly.rogers@dyncorp.com

or call in shipment information to Rich Freitas at:
(415) 972-3804

If Rich is out or unavailable Carl Brickner is his designated back-up and can be reached at (415) 972-3814.

For EPA Regional Analytical Contract Laboratory - EMAX:

If email is available send shipping information to Carl Brickner at:
brickner.carl@epa.gov
and cc to:
freitas.richard@epa.gov
mezquita.marlon@epa.gov

or call in shipment information to Carl Brickner at:
(415) 972-3814

If Carl is out or unavailable Rich Freitas is his designated back-up and can be reached at (415) 972-3804.

For EPA Dioxin Contract Laboratory Program:

If email is available send shipping information to Steve Remaley at:
remaley.steve@epa.gov

or call in shipment information to Steve Remaley at:

(415) 972-3802

Sample shipment information that is to be provided should include the following:

- Site Name
- Case Number
- Laboratory Name
- Shipping Date
- Carrier
- Airbill/Tracking Number
- Number of Coolers
- Number of Samples
- Sample Concentration
- Matrix
- Analyses
- Is the sampling event complete with this shipment or is it to continue?
- Any additional comments that may be relevant to the analyses or transportation of the samples.
- Sampler mobile phone number, if available.

Appendix D
Health and Safety Plan

CH2M HILL HEALTH AND SAFETY PLAN

This Health and Safety Plan (HSP) will be kept on the site during field activities and will be reviewed as necessary. The plan will be amended or revised as project activities or conditions change or when supplemental information becomes available. The plan adopts, by reference, the Standards of Practice (SOPs) in the CH2M HILL *Corporate Health and Safety Program, Program and Training Manual,* as appropriate. In addition, this plan adopts procedures in the project Work Plan. The Site Safety Coordinator (SSC) is to be familiar with these SOPs and the contents of this plan. CH2M HILL's personnel and subcontractors must sign Attachment 1.

Project Information and Description

PROJECT NO: 175859.FI.03

CLIENT: EPA

PROJECT/SITE NAME: NPL Area 3

SITE ADDRESS: Western portion of the San Gabriel Valley, CA

CH2M HILL PROJECT MANAGER: Bob Collar/SCO

CH2M HILL OFFICE: SCO

DATE HEALTH AND SAFETY PLAN PREPARED: June 3, 2002

DATE(S) OF SITE WORK: December 2002 to January 2005

SITE ACCESS: Various locations around the cities of Alhambra and San Gabriel, CA

SITE SIZE: 3 miles wide by 2 miles long

SITE TOPOGRAPHY: Flat, gently sloping elevation change of 550 feet (msl) to 300 feet (msl).

PREVAILING WEATHER: Warm and dry

SITE DESCRIPTION AND HISTORY: Area 3 is located in the western portion of the San Gabriel valley. The Raymond Fault forms the northern boundary. The Repetto Hills form the western edge and Rosemead Avenue and the Interstate 10 Freeway have been selected as the eastern and southern boundaries, respectively.

The scope of this project is assess the extent and magnitude of VOC groundwater contamination. There will be no drilling within the actual source areas.

DESCRIPTION OF SPECIFIC TASKS TO BE PERFORMED: Drilling and constructing monitoring wells within the cities of Alhambra and San Gabriel. The drilling subcontractor will be hiring third tier subcontractors to remove any contaminated soils and install sampling equipment in the MP wells.

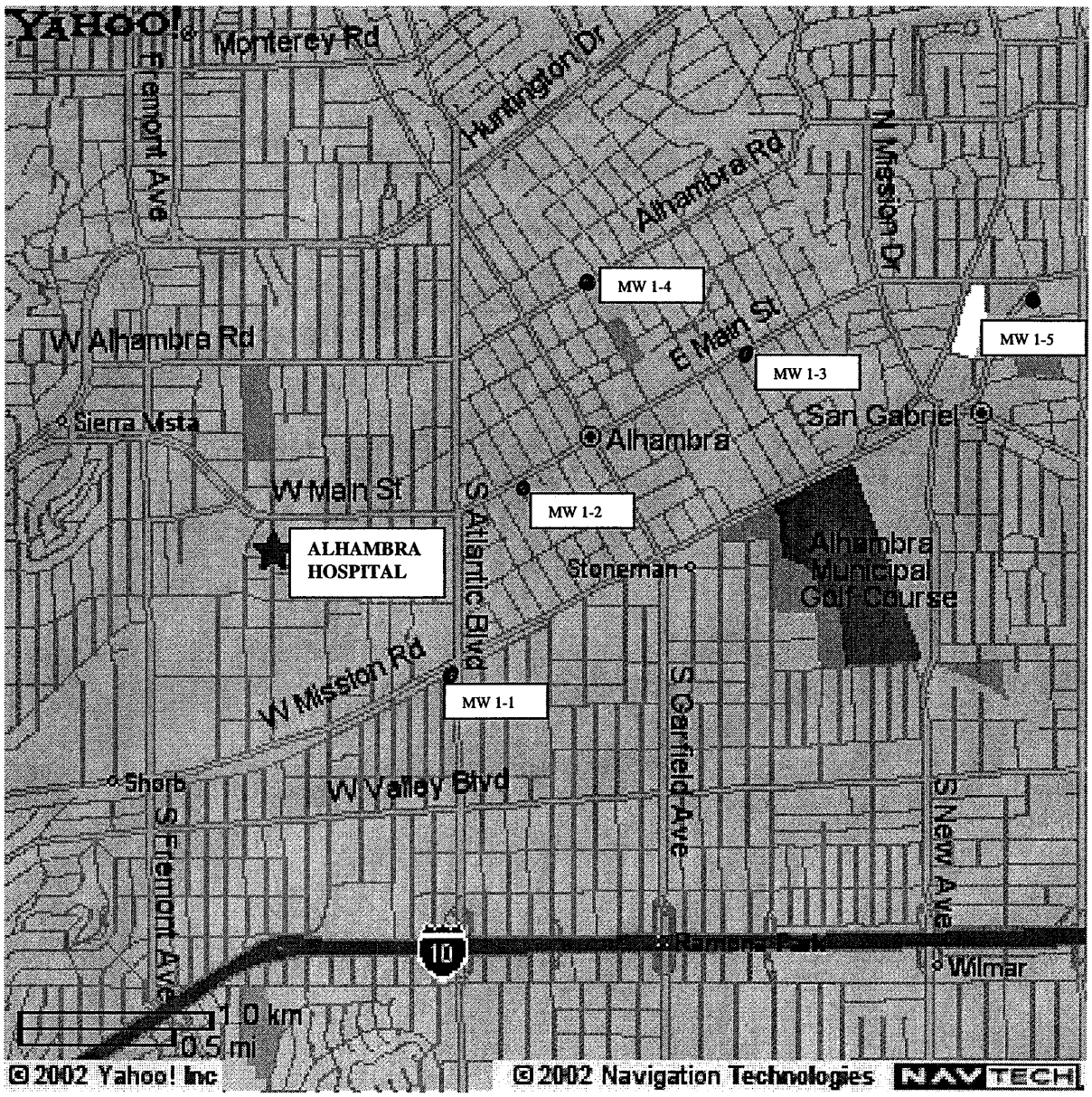
YAHOO!
Monterey Rd
Fremont Ave
Huntington Dr
Alhambra Rd
N Mission Dr
MW 1-4
MW 1-5
W Alhambra Rd
E Main St
MW 1-3
Sierra Vista
San Gabriel
Alhambra
W Main St
S Atlantic Blvd
MW 1-2
ALHAMBRA HOSPITAL
Stoneman
Alhambra Municipal Golf Course
W Mission Rd
MW 1-1
S Garfield Ave
Sherb
W Valley Blvd
S New Ave
S Fremont Ave
10
Ramona Park
Wilmar
1.0 km
0.5 mi
© 2002 Yahoo! Inc
© 2002 Navigation Technologies
NAVTECH

TABLE OF CONTENTS

PROJECT INFORMATION AND DESCRIPTION ..... **I**

SITE MAP ..... **I**

1 TASKS TO BE PERFORMED UNDER THIS PLAN **1**

1.1 DESCRIPTION OF TASKS 1
1.1.1 Hazwoper-Regulated Tasks *1*
1.1.2 Non-Hazwoper-Regulated Tasks *1*
1.2 TASK HAZARD ANALYSIS 3

2 HAZARD CONTROLS **5**

2.1 PROJECT-SPECIFIC HAZARDS 5
2.1.1 Drilling *5*
2.1.2 Heat Stress *5*
2.1.3 Exposure to Public Vehicular Traffic *6*
2.2 GENERAL HAZARDS 7
2.2.1 General Practices and Housekeeping *7*
2.2.2 Hazard Communication *7*
2.2.3 Shipping and Transportation of Chemical Products *7*
2.2.4 Lifting *7*
2.2.5 Fire Prevention *8*
2.2.6 Electrical *8*
2.2.7 Stairways and Ladders *8*
2.2.8 Cold Stress *9*
2.2.9 Compressed Gas Cylinders *9*
2.2.10 Procedures for Locating Buried Utilities *10*
2.3 BIOLOGICAL HAZARDS AND CONTROLS 10
2.3.1 Snakes *10*
2.3.2 Poison Ivy and Poison Sumac *10*
2.3.3 Ticks *10*
2.3.4 Bees and Other Stinging Insects *10*
2.3.5 Bloodborne Pathogens *11*
2.3.6 Other Anticipated Biological Hazards *11*
2.4 CONTAMINANTS OF CONCERN 13
2.5 POTENTIAL ROUTES OF EXPOSURE 13

3 PROJECT ORGANIZATION AND PERSONNEL **15**

3.1 CH2M HILL EMPLOYEE MEDICAL SURVEILLANCE AND TRAINING 15
3.2 FIELD TEAM CHAIN OF COMMAND AND COMMUNICATION PROCEDURES 15
3.2.1 Client *15*
3.2.2 CH2M HILL *15*
3.2.3 CH2M HILL Subcontractors *16*

4 PERSONAL PROTECTIVE EQUIPMENT (PPE) **17**

5 AIR MONITORING/SAMPLING **18**

5.1 AIR MONITORING SPECIFICATIONS 18
5.2 CALIBRATION SPECIFICATIONS 18
5.3 AIR SAMPLING 18

6 DECONTAMINATION **19**

6.1 DECONTAMINATION SPECIFICATIONS 19
6.2 DIAGRAM OF PERSONNEL-DECONTAMINATION LINE 19

7 SPILL-CONTAINMENT PROCEDURES **19**

8 SITE-CONTROL PLAN 23

8.1 SITE-CONTROL PROCEDURES 23
8.2 HAZWOPER COMPLIANCE PLAN 23

9 EMERGENCY RESPONSE PLAN 24

9.1 PRE-EMERGENCY PLANNING 24
9.2 EMERGENCY EQUIPMENT AND SUPPLIES 24
9.3 INCIDENT RESPONSE 24
9.4 EMERGENCY MEDICAL TREATMENT 25
9.5 EVACUATION 25
9.6 EVACUATION SIGNALS 25
9.7 INCIDENT NOTIFICATION AND REPORTING 25

10 APPROVAL 26

10.1 ORIGINAL PLAN 26
10.2 REVISIONS 26

11 ATTACHMENTS 26

ATTACHMENT 1: EMPLOYEE SIGNOFF FORM – FIELD SAFETY INSTRUCTIONS
ATTACHMENT 2: PROJECT-SPECIFIC CHEMICAL PRODUCT HAZARD COMMUNICATION FORM
ATTACHMENT 3: CHEMICAL-SPECIFIC TRAINING FORM
ATTACHMENT 4: EMERGENCY CONTACTS
ATTACHMENT 5: PROJECT H&S FORMS/PERMITS
ATTACHMENT 6: PROJECT ACTIVITY SELF-ASSESSMENT CHECKLISTS
ATTACHMENT 7: APPLICABLE MATERIAL SAFETY DATA SHEETS

1 Tasks to be Performed Under this Plan

1.1 Description of Tasks

(Reference Field Project Start-up Form)

Refer to project documents (i.e., Field Sampling Plan) for detailed task information. A health and safety risk analysis (Section 1.2) has been performed for each task and is incorporated in this plan through task-specific hazard controls and requirements for monitoring and protection. Tasks other than those listed below require an approved amendment or revision to this plan before tasks begin. Refer to Section 8.2 for procedures related to "clean" tasks that do not involve hazardous waste operations and emergency response (Hazwoper).

1.1.1 Hazwoper-Regulated Tasks

- Drilling
- Groundwater monitoring
-
- Investigation-derived waste sampling and disposal
- Observation of material loading for offsite disposal
-

1.1.2 Non-Hazwoper-Regulated Tasks

Under specific circumstances, the training and medical monitoring requirements of federal or state Hazwoper regulations are not applicable. It must be demonstrated that the tasks can be performed without the possibility of exposure in order to use non-Hazwoper-trained personnel. **Prior approval from the Health and Safety Manager (HSM) is required before these tasks are conducted on regulated hazardous waste sites.**

TASKS	CONTROLS
• Engineering testing/evaluation	• Brief on hazards, limits of access, and emergency procedures
• Waste removal/hauling	• Post contaminant areas as appropriate (refer to Section 8.2 for details)
•	• Sample and monitor as appropriate (refer to Section 5.0)
•	

1.2 Task Hazard Analysis

(Refer to Section 2 for hazard controls)

POTENTIAL HAZARDS	TASKS			
	Drilling and well installation	Groundwater monitoring	IDW sampling and disposal	Observation of loading material for offsite disposal
Flying debris/objects	X		X	X
Noise > 85dBA	X			X
Electrical	X	X		
Suspended loads	X			X
Buried utilities, drums, tanks	X			
Slip, trip, fall	X	X	X	X
Back injury	X	X	X	
Confined space entry				
Trenches / excavations				
Visible lightning	X	X	X	X
Vehicle traffic				X
Elevated work areas/falls				
Fires	X		X	
Entanglement	X			
Drilling	X			
Heavy equipment	X			X
Working near water				
Working from boat				
IDW Sampling			X	

2 Hazard Controls

This section provides safe work practices and control measures used to reduce or eliminate potential hazards. These practices and controls are to be implemented by the party in control of either the site or the particular hazard. CH2M HILL employees and subcontractors must remain aware of the hazards affecting them regardless of who is responsible for controlling the hazards. CH2M HILL employees and subcontractors who do not understand any of these provisions should contact the SSC for clarification.

In addition to the controls specified in this section, Project-Activity Self-Assessment Checklists are contained in Attachment 6. These checklists are to be used to assess the adequacy of CH2M HILL and subcontractor site-specific safety requirements. The objective of the self-assessment process is to identify gaps in project safety performance, and prompt for corrective actions in addressing these gaps. Self-assessment checklists should be completed early in the project, when tasks or conditions change, or when otherwise specified by the HSM. The self-assessment checklists, including documented corrective actions, should be made part of the permanent project records, and be promptly submitted to the HSM.

Project-specific frequency for completing self-assessments: **WEEKLY**

2.1 Project-Specific Hazards

2.1.1 Drilling (Reference CH2M HILL SOP HS-35, *Drilling*)

- Only authorized personnel are permitted to operate drill rigs.
- Stay clear of areas surrounding drill rigs during every startup.
- Stay clear of the rotating augers and other rotating components of drill rigs.
- Stay as clear as possible of all hoisting operations. Loads shall not be hoisted overhead of personnel.
- Do not wear loose-fitting clothing or other items such as rings or watches that could get caught in moving parts. Long hair should have it restrained.
- If equipment becomes electrically energized, personnel shall be instructed not to touch any part of the equipment or attempt to touch any person who may be in contact with the electrical current. The utility company or appropriate party shall be contacted to have line de-energized prior to approaching the equipment.
- Smoking around drilling operations is prohibited.

2.1.2 Heat Stress (Reference CH2M HILL SOP HS-09, *Heat and Cold Stress*)

- Drink 16 ounces of water before beginning work. Disposable cups and water maintained at 50°F to 60°F should be available. Under severe conditions, drink 1 to 2 cups every 20 minutes, for a total of 1 to 2 gallons per day. Do not use alcohol in place of water or other nonalcoholic fluids. Decrease your intake of coffee and caffeinated soft drinks during working hours.
- Acclimate yourself by slowly increasing workloads (e.g., do not begin with extremely demanding activities).
- Use cooling devices, such as cooling vests, to aid natural body ventilation. These devices add weight, so their use should be balanced against efficiency.
- Use mobile showers or hose-down facilities to reduce body temperature and cool protective clothing.
- Conduct field activities in the early morning or evening and rotate shifts of workers, if possible.
- Avoid direct sun whenever possible, which can decrease physical efficiency and increase the probability of heat stress. Take regular breaks in a cool, shaded area. Use a wide-brim hat or an umbrella when working under direct sun for extended periods.
- Provide adequate shelter/shade to protect personnel against radiant heat (sun, flames, hot metal).
- Maintain good hygiene standards by frequently changing clothing and showering.
- Observe one another for signs of heat stress. Persons who experience signs of heat syncope, heat rash, or heat cramps should consult the SSC/DSC to avoid progression of heat-related illness.

SYMPTOMS AND TREATMENT OF HEAT STRESS					
	Heat Syncope	Heat Rash	Heat Cramps	Heat Exhaustion	Heat Stroke
Signs and Symptoms	Sluggishness or fainting while standing erect or immobile in heat.	Profuse tiny raised red blister-like vesicles on affected areas, along with prickling sensations during heat exposure.	Painful spasms in muscles used during work (arms, legs, or abdomen); onset during or after work hours.	Fatigue, nausea, headache, giddiness; skin clammy and moist; complexion pale, muddy, or flushed; may faint on standing; rapid thready pulse and low blood pressure; oral temperature normal or low	Red, hot, dry skin; dizziness; confusion; rapid breathing and pulse; high oral temperature.
Treatment	Remove to cooler area. Rest lying down. Increase fluid intake. Recovery usually is prompt and complete.	Use mild drying lotions and powders, and keep skin clean for drying skin and preventing infection.	Remove to cooler area. Rest lying down. Increase fluid intake.	Remove to cooler area. Rest lying down, with head in low position. Administer fluids by mouth. Seek medical attention.	Cool rapidly by soaking in cool– but not cold– water. Call ambulance, and get medical attention immediately!

2.1.3 Exposure to Public Vehicular Traffic

The following precautions must be taken when working around traffic, and in or near an area where traffic controls have been established by a contractor.

- Exercise caution when exiting traveled way or parking along street – avoid sudden stops, use flashers, etc.
- Park in a manner that will allow for safe exit from vehicle, and where practicable, park vehicle so that it can serve as a barrier.
- All staff working adjacent to traveled way or within work area must wear reflective/high-visibility safety vests.
- Eye protection should be worn to protect from flying debris.
- Remain aware of factors that influence traffic related hazards and required controls – sun glare, rain, wind, flash flooding, limited sight-distance, hills, curves, guardrails, width of shoulder (i.e., breakdown lane), etc.
- Always remain aware of an escape route -- behind an established barrier, parked vehicle, guardrail, etc.
- Always pay attention to moving traffic – never assume drivers are looking out for you
- Work as far from traveled way as possible to avoid creating confusion for drivers.
- When workers must face away from traffic, a "buddy system" should be used, where one worker is looking towards traffic.
- When working on highway projects, obtain a copy of the contractor's traffic control plan.
- Work area should be protected by a physical barrier – such as a K-rail or Jersey barrier.
- Review traffic control devices to ensure that they are adequate to protect your work area. Traffic control devices should: 1) convey a clear meaning, 2) command respect of road users, and 3) give adequate time for proper traffic response. The adequacy of these devices are dependent on limited sight distance, proximity to ramps or intersections, restrictive width, duration of job, and traffic volume, speed, and proximity.
- Either a barrier or shadow vehicle should be positioned a considerable distance ahead of the work area. The vehicle should be equipped with a flashing arrow sign and truck-mounted crash cushion (TMCC). All vehicles within 40 feet of traffic should have an orange flashing hazard light atop the vehicle.

- Except on highways, flaggers should be used when 1) two-way traffic is reduced to using one common lane, 2) driver visibility is impaired or limited, 3) project vehicles enter or exit traffic in an unexpected manner, or 4) the use of a flagger enhances established traffic warning systems.

- Lookouts should be used when physical barriers are not available or practical. The lookout continually watches approaching traffic for signs of erratic driver behavior and warns workers. Vehicles should be parked at least 40 feet away from the work zone and traffic. Minimize the amount of time that you will have your back to oncoming traffic.

2.2 General Hazards

2.2.1 General Practices and Housekeeping

(Reference CH2M HILL SOP HS-20, *General Practices*)

- Site work should be performed during daylight hours whenever possible. Work conducted during hours of darkness require enough illumination intensity to read a newspaper without difficulty.
- Good housekeeping must be maintained at all times in all project work areas.
- Common paths of travel should be established and kept free from the accumulation of materials.
- Keep access to aisles, exits, ladders, stairways, scaffolding, and emergency equipment free from obstructions.
- Provide slip-resistant surfaces, ropes, and/or other devices to be used.
- Specific areas should be designated for the proper storage of materials.
- Tools, equipment, materials, and supplies shall be stored in an orderly manner.
- As work progresses, scrap and unessential materials must be neatly stored or removed from the work area.
- Containers should be provided for collecting trash and other debris and shall be removed at regular intervals.
- All spills shall be quickly cleaned up. Oil and grease shall be cleaned from walking and working surfaces.

2.2.2 Hazard Communication

(Reference CH2M HILL SOP HS-05, *Hazard Communication)*

The SSC is to perform the following:

- Complete an inventory of chemicals brought on site by CH2M HILL using Attachment 2.
- Confirm that an inventory of chemicals brought on site by CH2M HILL subcontractors is available.
- Request or confirm locations of Material Safety Data Sheets (MSDSs) from the client, contractors, and subcontractors for chemicals to which CH2M HILL employees potentially are exposed.
- Before or as the chemicals arrive on site, obtain an MSDS for each hazardous chemical.
- Label chemical containers with the identity of the chemical and with hazard warnings, and store properly.
- Give employees required chemical-specific HAZCOM training using Attachment 3.
- Store all materials properly, giving consideration to compatibility, quantity limits, secondary containment, fire prevention, and environmental conditions.

2.2.3 Shipping and Transportation of Chemical Products

(Reference CH2M HILL's *Procedures for Shipping and Transporting Dangerous Goods)*

Chemicals brought to the site might be defined as hazardous materials by the U.S. Department of Transportation (DOT). All staff who ship the materials or transport them by road must receive CH2M HILL training in shipping dangerous goods. All hazardous materials that are shipped (e.g., via Federal Express) or are transported by road must be properly identified, labeled, packed, and documented by trained staff. Contact the HSM or the Equipment Coordinator for additional information.

2.2.4 Lifting

(Reference CH2M HILL SOP HS-29, *Lifting*)

- Proper lifting techniques must be used when lifting any object.
  - Plan storage and staging to minimize lifting or carrying distances.
  - Split heavy loads into smaller loads.
  - Use mechanical lifting aids whenever possible.
  - Have someone assist with the lift -- especially for heavy or awkward loads.
  - Make sure the path of travel is clear prior to the lift.

2.2.5 Fire Prevention

(Reference CH2M HILL SOP HS-22, *Fire Prevention*)

- Fire extinguishers shall be provided so that the travel distance from any work area to the nearest extinguisher is less than 100 feet. When 5 gallons or more of a flammable or combustible liquid is being used, an extinguisher must be within 50 feet. Extinguishers must:
  - be maintained in a fully charged and operable condition,
  - be visually inspected each month, and
  - undergo a maintenance check each year.
- The area in front of extinguishers must be kept clear.
- Post "Exit" signs over exiting doors, and post "Fire Extinguisher" signs over extinguisher locations.
- Combustible materials stored outside should be at least 10 feet from any building.
- Solvent waste and oily rags must be kept in a fire resistant, covered container until removed from the site.
- Flammable/combustible liquids must be kept in approved containers, and must be stored in an approved storage cabinet.

2.2.6 Electrical

(Reference CH2M HILL SOP HS-23, *Electrical*)

- Only qualified personnel are permitted to work on unprotected energized electrical systems.
- Only authorized personnel are permitted to enter high-voltage areas.
- Do not tamper with electrical wiring and equipment unless qualified to do so. All electrical wiring and equipment must be considered energized until lockout/tagout procedures are implemented.
- Inspect electrical equipment, power tools, and extension cords for damage prior to use. Do not use defective electrical equipment, remove from service.
- All temporary wiring, including extension cords and electrical power tools, must have ground fault circuit interrupters (GFCIs) installed.
- Extension cords must be:
  - equipped with third-wire grounding.
  - covered, elevated, or protected from damage when passing through work areas.
  - protected from pinching if routed through doorways.
  - not fastened with staples, hung from nails, or suspended with wire.
- Electrical power tools and equipment must be effectively grounded or double-insulated UL approved.
- Operate and maintain electric power tools and equipment according to manufacturers' instructions.
- Maintain safe clearance distances between overhead power lines and any electrical conducting material unless the power lines have been de-energized and grounded, or where insulating barriers have been installed to prevent physical contact. Maintain at least 10 feet from overhead power lines for voltages of 50 kV or less, and 10 feet plus ½ inch for every 1 kV over 50 kV.
- Temporary lights shall not be suspended by their electric cord unless designed for suspension. Lights shall be protected from accidental contact or breakage.
- Protect all electrical equipment, tools, switches, and outlets from environmental elements.

2.2.7 Stairways and Ladders

(Reference CH2M HILL SOP HS-25, *Stairways and Ladders*)

- Stairway or ladder is generally required when a break in elevation of 19 inches or greater exists.
- Personnel should avoid using both hands to carry objects while on stairways; if unavoidable, use extra precautions.
- Personnel must not use pan and skeleton metal stairs until permanent or temporary treads and landings are provided the full width and depth of each step and landing.
- Ladders must be inspected by a competent person for visible defects prior to each day's use. Defective ladders must be tagged and removed from service.
- Ladders must be used only for the purpose for which they were designed and shall not be loaded beyond their rated capacity.
- Only one person at a time shall climb on or work from an individual ladder.
- User must face the ladder when climbing; keep belt buckle between side rails
- Ladders shall not be moved, shifted, or extended while in use.

- User must use both hands to climb; use rope to raise and lower equipment and materials
- Straight and extension ladders must be tied off to prevent displacement
- Ladders that may be displaced by work activities or traffic must be secured or barricaded
- Portable ladders must extend at least 3 feet above landing surface
- Straight and extension ladders must be positioned at such an angle that the ladder base to the wall is one-fourth of the working length of the ladder
- Stepladders are to be used in the fully opened and locked position
- Users are not to stand on the top two steps of a stepladder; nor are users to sit on top or straddle a stepladder
- Fixed ladders $\geq$ 24 feet in height must be provided with fall protection devices.
- Fall protection should be considered when working from extension, straight, or fixed ladders greater than six feet from lower levels and both hands are needed to perform the work, or when reaching or working outside of the plane of ladder side rails.

2.2.8 Cold Stress

(Reference CH2M HILL SOP HS-09, *Heat and Cold Stress*)

- Be aware of the symptoms of cold-related disorders, and wear proper, layered clothing for the anticipated fieldwork. Appropriate rain gear is a must in cool weather.
- Consider monitoring the work conditions and adjusting the work schedule using guidelines developed by the U.S. Army (wind-chill index) and the National Safety Council (NSC).
- Wind-Chill Index is used to estimate the combined effect of wind and low air temperatures on exposed skin. The wind-chill index does not take into account the body part that is exposed, the level of activity, or the amount or type of clothing worn. For those reasons, it should only be used as a guideline to warn workers when they are in a situation that can cause cold-related illnesses.
- NSC Guidelines for Work and Warm-Up Schedules can be used with the wind-chill index to estimate work and warm-up schedules for fieldwork. The guidelines are not absolute; workers should be monitored for symptoms of cold-related illnesses. If symptoms are not observed, the work duration can be increased.
- Persons who experience initial signs of immersion foot, frostbite, hypothermia should consult the SSC/DSC to avoid progression of cold-related illness.
- Observe one another for initial signs of cold-related disorders.
- Obtain and review weather forecast – be aware of predicted weather systems along with sudden drops in temperature, increase in winds, and precipitation.

SYMPTOMS AND TREATMENT OF COLD STRESS			
	Immersion (Trench) Foot	**Frostbite**	**Hypothermia**
Signs and Symptoms	Feet discolored and painful; infection and swelling present.	Blanched, white, waxy skin, but tissue resilient; tissue cold and pale.	Shivering, apathy, sleepiness; rapid drop in body temperature; glassy stare; slow pulse; slow respiration.
Treatment	Seek medical treatment immediately.	Remove victim to a warm place. Re-warm area quickly in warm–but **not** hot–water. Have victim drink warm fluids, but **not** coffee or alcohol. Do not break blisters. Elevate the injured area, and get medical attention.	Remove victim to a warm place. Have victim drink warm fluids, but **not** coffee or alcohol. Get medical attention.

2.2.9 Compressed Gas Cylinders

- Valve caps must be in place when cylinders are transported, moved, or stored.
- Cylinder valves must be closed when cylinders are not being used and when cylinders are being moved.
- Cylinders must be secured in an upright position at all times.
- Cylinders must be shielded from welding and cutting operations and positioned to avoid being struck or knocked over; contacting electrical circuits; or exposed to extreme heat sources.
- Cylinders must be secured on a cradle, basket, or pallet when hoisted; they may not be hoisted by choker slings.

2.2.10 Procedures for Locating Buried Utilities

Local Utility Mark-Out Service

Name: Dig Alert
Phone: 1-800-227-2600

- Where available, obtain utility diagrams for the facility.
- Review locations of sanitary and storm sewers, electrical conduits, water supply lines, natural gas lines, and fuel tanks and lines.
- Review proposed locations of intrusive work with facility personnel knowledgeable of locations of utilities. Check locations against information from utility mark-out service.
- Where necessary (e.g., uncertainty about utility locations), excavation or drilling of the upper depth interval should be performed manually
- Monitor for signs of utilities during advancement of intrusive work (e.g., sudden change n advancement of auger or split spoon).
- When the client or other onsite party is responsible for determining the presence and locations of buried utilities, the SSC should confirm that arrangement.

2.3 Biological Hazards and Controls

2.3.1 Snakes

Snakes typically are found in underbrush and tall grassy areas. If you encounter a snake, stay calm and look around; there may be other snakes. Turn around and walk away on the same path you used to approach the area. If a person is bitten by a snake, wash and immobilize the injured area, keeping it lower than the heart if possible. Seek medical attention immediately. **DO NOT** apply ice, cut the wound, or apply a tourniquet. Try to identify the type of snake: note color, size, patterns, and markings.

2.3.2 Poison Ivy and Poison Sumac

Poison ivy, poison oak, and poison sumac typically are found in brush or wooded areas. They are more commonly found in moist areas or along the edges of wooded areas. Become familiar with the identity of these plants. Wear protective clothing that covers exposed skin and clothes. Avoid contact with plants and the outside of protective clothing. If skin contacts a plant, wash the area with soap and water immediately. If the reaction is severe or worsens, seek medical attention.

2.3.3 Ticks

Ticks typically are in wooded areas, bushes, tall grass, and brush. Ticks are black, black and red, or brown and can be up to one-quarter inch in size. Wear tightly woven light-colored clothing with long sleeves and pant legs tucked into boots; spray **only outside** of clothing with permethrin or permanone and spray skin with only DEET; and check yourself frequently for ticks.

If bitten by a tick, grasp it at the point of attachment and carefully remove it. After removing the tick, wash your hands and disinfect and press the bite areas. Save the removed tick. Report the bite to human resources. Look for symptoms of Lyme disease or Rocky Mountain spotted fever (RMSF). Lyme: a rash might appear that looks like a bullseye with a small welt in the center. RMSF: a rash of red spots under the skin 3 to 10 days after the tick bite. In both cases, chills, fever, headache, fatigue, stiff neck, and bone pain may develop. If symptoms appear, seek medical attention.

2.3.4 Bees and Other Stinging Insects

Bee and other stinging insects may be encountered almost anywhere and may present a serious hazard, particularly to people who are allergic. Watch for and avoid nests. Keep exposed skin to a minimum. Carry a kit if you have had allergic reactions in the past, and inform the SSC and/or buddy. If a stinger is present, remove it carefully with tweezers. Wash and disinfect the wound, cover it, and apply ice. Watch for allergic reaction; seek medical attention if a reaction develops.

2.3.5 Bloodborne Pathogens

(Reference CH2M HILL SOP HS-36, *Bloodborne Pathogens*)

Exposure to bloodborne pathogens may occur when rendering first aid or CPR, or when coming into contact with landfill waste or waste streams containing potentially infectious material. Exposure controls and personal protective equipment (PPE) are required as specified in CH2M HILL SOP HS-36, *Bloodborne Pathogens*. Hepatitis B vaccination must be offered before the person participates in a task where exposure is a possibility.

2.3.6 Other Anticipated Biological Hazards

None

2.4 Contaminants of Concern

(Refer to Project Files for more detailed contaminant information)

Contaminant	Location and Maximum[a] Concentration (ppm)	Exposure Limit[b]	IDLH[c]	Symptoms and Effects of Exposure	PIP[d] (eV)
1,1,2,2-Tetrachloroethane (Tetrachlorethane)	GW: ND SB:ND D:ND	1 ppm	100 Ca	Nausea, vomiting, abdominal pain, finger tremors, jaundice, hepatitis, liver tenderness, monocytosis, kidney damage, dermatitis	11.10
Tetrachloroethylene (PCE)	GW: 23 ug/l SB:ND D:ND	25 ppm	150 Ca	Eye, nose, and throat irritation; nausea; flushed face and neck; vertigo; dizziness; sleepiness; skin redness; headache; liver damage	9.32
1,1,2-Trichloroethane	GW: ND SB:ND D:ND	10 ppm	100 Ca	Eye and nose irritation, CNS depression, liver damage, dermatitis	11.00
Trichloroethylene (TCE)	GW: 18.4 ug/l SB:ND D:ND	50 ppm	1,000 Ca	Headache, vertigo, visual disturbance, eye and skin irritation, fatigue, giddiness, tremors, sleepiness, nausea, vomiting, dermatitis, cardiac arrhythmia, paresthesia, liver injury	9.45
Toluene	GW: ND SB:ND D:ND	50 ppm	500	Eye and nose irritation, fatigue, weakness, confusion, dizziness, headache, dilated pupils, excessive tearing, nervousness, muscle fatigue, paresthesia, dermatitis, liver and kidney damage	8.82
Xylenes	GW: ND SB:ND D:ND	100 ppm	900	Irritated eyes, skin, nose, and throat; dizziness; excitement; drowsiness; incoherence; staggering gait; corneal vacuolization; anorexia; nausea; vomiting; abdominal pain; dermatitis	8.56

Footnotes:

[a] Specify sample-designation and media: SB (Soil Boring), A (Air), D (Drums or Roll-Off Bins), GW (Groundwater), L (Lagoon), TK (Tank), S (Surface Soil), SL (Sludge), SW (Surface Water).

[b] Appropriate value of PEL, REL, or TLV listed.

[c] IDLH = immediately dangerous to life and health (units are the same as specified "Exposure Limit" units for that contaminant); NL = No limit found in reference materials; CA = Potential occupational carcinogen.

[d] PIP = photoionization potential

NA = Not applicable; UK = Unknown; ND = Not detected.

2.5 Potential Routes of Exposure

Dermal: Contact with contaminated media. This route of exposure is minimized through proper use of PPE, as specified in Section 4.	**Inhalation:** Vapors and contaminated particulates. This route of exposure is minimized through proper respiratory protection and monitoring, as specified in Sections 4 and 5, respectively.	**Other:** Inadvertent ingestion of contaminated media. This route should not present a concern if good hygiene practices are followed (e.g., wash hands and face before drinking or smoking).

3 Project Organization and Personnel

3.1 CH2M HILL Employee Medical Surveillance and Training

(Reference CH2M HILL SOPs HS-01, *Medical Surveillance*, and HS-02, *Health and Safety Training)*

The employees listed below are enrolled in the CH2M HILL Comprehensive Health and Safety Program and meet state and federal hazardous waste operations requirements for 40-hour initial training, 3-day on-the-job experience, and 8-hour annual refresher training. Employees designated "SSC" have completed a 12-hour site safety coordinator course, and have documented requisite field experience. An SSC with a level designation (D, C, B) equal to or greater than the level of protection being used must be present during all tasks performed in exclusion or decontamination zones. Employees designated "FA-CPR" are currently certified by the American Red Cross, or equivalent, in first aid and CPR. At least one FA-CPR designated employee must be present during all tasks performed in exclusion or decontamination zones. The employees listed below are currently active in a medical surveillance program that meets state and federal regulatory requirements for hazardous waste operations. Certain tasks (e.g., confined-space entry) and contaminants (e.g., lead) may require additional training and medical monitoring.

Pregnant employees are to be informed of and are to follow the procedures in CH2M HILL's SOP HS-04, *Reproduction Protection*, including obtaining a physician's statement of the employee's ability to perform hazardous activities before being assigned fieldwork.

Employee Name	Office	Responsibility	SSC/FA-CPR
Bob Collar	SCO	Project Manager	Level C, FA/CPR
Michelle Goddard	SDO	Field Staff	Level D,
William Hannah	SCO	Field Staff	Level D
Maura Kennelly	SCO	Field Leader/Staff	Level D
Vikas Mathur	SCO	Task Manager, SSC	Level C, SSC, FA/CPR
Mike Ladeau	SCO	Field Staff	Level D, FA/CPR

3.2 Field Team Chain of Command and Communication Procedures

3.2.1 Client

Contact Name: Lisa Hanusiak, EPA Region 9
Phone: 415/972-3152
Facility Contact Name:N/A
Phone:N/A

3.2.2 CH2M HILL

Project Manager: Bob Collar/SCO
Health and Safety Manager: Rick Cavil/SJC
Field Team Leader: Maura Kennelly/SCO
Site Safety Coordinator: Vikas Mathur/SCO

The SSC is responsible for contacting the Field Team Leader and Project Manager. In general, the Project Manager will contact the client. The Health and Safety Manager should be contacted as appropriate.

3.2.3 CH2M HILL Subcontractors

(Reference CH2M HILL SOP HS-55, *Subcontractor, Contractor, and Owner*)

Subcontractor: Water Development Corporation
Subcontractor Contact Name:Ray Quintero
Telephone:909-917-9211 (mobile)

Subcontractor: Water Development Corporation
Subcontractor Contact Name:Roger Langley
Telephone:909-931-4014

The subcontractors listed above are covered by this HSP and must be provided a copy of this plan. However, this plan does not address hazards associated with the tasks and equipment that the subcontractor has expertise in (e.g., drilling, excavation work, electrical). Subcontractors are responsible for the health and safety procedures specific to their work, and are required to submit these procedures to CH2M HILL for review before the start of field work. Subcontractors must comply with the established health and safety plan(s). The CH2M HILL SSC should verify that subcontractor employee training, medical clearance, and fit test records are current and must monitor and enforce compliance with the established plan(s). CH2M HILL's oversight does not relieve subcontractors of their responsibility for effective implementation and compliance with the established plan(s).

CH2M HILL should continuously endeavor to observe subcontractors' safety performance. This endeavor should be reasonable, and include observing for hazards or unsafe practices that are both readily observable and occur in common work areas. CH2M HILL is not responsible for exhaustive observation for hazards and unsafe practices. In addition to this level of observation, the SSC is responsible for confirming CH2M HILL subcontractor performance against both the subcontractor's safety plan and applicable self-assessment checklists. Self-assessment checklists contained in Attachment 6 are to be used by the SSC to review subcontractor performance.

Health and safety related communications with CH2M HILL subcontractors should be conducted as follows:

- Brief subcontractors on the provisions of this plan, and require them to sign the Employee Signoff Form included in Attachment 1.
- Request subcontractor(s) to brief the project team on the hazards and precautions related to their work.
- When apparent non-compliance/unsafe conditions or practices are observed, notify the subcontractor safety representative and require corrective action – the subcontractor is responsible for determining and implementing necessary controls and corrective actions.
- When repeat non-compliance/unsafe conditions are observed, notify the subcontractor safety representative and stop affected work until adequate corrective measures are implemented.
- When an apparent imminent danger exists, immediately remove all affected CH2M HILL employees and subcontractors, notify subcontractor safety representative, and stop affected work until adequate corrective measures are implemented. Notify the Project Manager and HSM as appropriate.
- Document all oral health and safety related communications in project field logbook, daily reports, or other records.

4 Personal Protective Equipment (PPE)

(Reference CH2M HILL SOP HS-07, *Personal Protective Equipment*, HS-08, *Respiratory Protection*)

PPE Specifications [a]

Task	Level	Body	Head	Respirator [b]
General site entry	D	Work clothes; steel-toe, leather work boots; reflective safety vest & work glove.	Hardhat [c] Safety glasses Ear protection [d]	None required
Groundwater sampling Soil boring Investigation-derived waste (drum) sampling and disposal	Modified D	**Coveralls:** Uncoated Tyvek® **Boots:** Steel-toe, chemical-resistant boots OR steel-toe, leather work boots with outer rubber boot covers **Gloves:** Inner surgical-style nitrile & outer chemical-resistant nitrile gloves.	Hardhat [c] Splash shield [c] Safety glasses Ear protection [d]	None required.
Tasks requiring upgrade	C	**Coveralls:** Polycoated Tyvek® **Boots:** Steel-toe, chemical-resistant boots OR steel-toe, leather work boots with outer rubber boot covers **Gloves:** Inner surgical-style nitrile & outer chemical-resistant nitrile gloves.	Hardhat [c] Splash shield [c] Ear protection [d] Spectacle inserts	APR, full face, MSA Ultratwin or equivalent; with GME-H cartridges or equivalent[e].
Tasks requiring upgrade	B	**Coveralls:** Polycoated Tyvek® **Boots:** Steel-toe, chemical-resistant boots OR steel-toe, leather work boots with outer rubber boot covers **Gloves:** Inner surgical-style nitrile & outer chemical-resistant nitrile gloves.	Hardhat [c] Splash shield [c] Ear protection [d] Spectacle inserts	Positive-pressure demand self-contained breathing apparatus (SCBA); MSA Ultralite, or equivalent.

Reasons for Upgrading or Downgrading Level of Protection

Upgrade[f]	Downgrade
• Request from individual performing tasks. • Change in work tasks that will increase contact or potential contact with hazardous materials. • Occurrence or likely occurrence of gas or vapor emission. • Known or suspected presence of dermal hazards. • Instrument action levels (Section 5) exceeded.	• New information indicating that situation is less hazardous than originally thought. • Change in site conditions that decreases the hazard. • Change in work task that will reduce contact with hazardous materials.

[a] Modifications are as indicated. CH2M HILL will provide PPE only to CH2M HILL employees.

[b] No facial hair that would interfere with respirator fit is permitted.

[c] Hardhat and splash-shield areas are to be determined by the SSC.

[d] Ear protection should be worn when conversations cannot be held at distances of 3 feet or less without shouting.

[e] Cartridge change-out schedule is at least every 8 hours (or one work day), except if relative humidity is > 85%, or if organic vapor measurements are > midpoint of Level C range (refer to Section 5)--then at least every 4 hours. If encountered conditions are different than those anticipated in this HSP, contact the HSM.

[f] Performing a task that requires an upgrade to a higher level of protection (e.g., Level D to Level C) is permitted only when the PPE requirements have been approved by the HSM, and an SSC qualified at that level is present.

5 Air Monitoring/Sampling

(Reference CH2M HILL SOP HS-06, *Air Monitoring)*

5.1 Air Monitoring Specifications

Instrument	Tasks	Action Levels[a]		Frequency [b]	Calibration
PID: OVM with 10.6eV lamp or equivalent	Sampling of soils and groundwater	< 5 ppm > 5 ppm > 25 ppm	Level D Level C Stop work, call HSM	Initially and periodically during task	Daily
Nose-Level Monitor [e]:	Drilling operations	<85 dB(A) 85-120 dB(A) 120 dB(A)	No action required Hearing protection required Stop; re-evaluate	Initially and periodically during task	Daily

[a] Action levels apply to sustained breathing-zone measurements above background.

[b] The exact frequency of monitoring depends on field conditions and is to be determined by the SSC; generally, every 5 to 15 minutes if acceptable; more frequently may be appropriate. Monitoring results should be recorded. Documentation should include instrument and calibration information, time, measurement results, personnel monitored, and place/location where measurement is taken (e.g., "Breathing Zone/MW-3", "at surface/SB-2", etc.).

[c] If the measured percent of O_2 is less than 10, an accurate LEL reading will not be obtained. Percent LEL and percent O_2 action levels apply only to ambient working atmospheres, and not to confined-space entry. More-stringent percent LEL and O_2 action levels are required for confined-space entry (refer to Section 2).

[d] Refer to SOP HS-10 for instructions and documentation on radiation monitoring and screening.

[e] Noise monitoring and audiometric testing also required.

5.2 Calibration Specifications

(Refer to the respective manufacturer's instructions for proper instrument-maintenance procedures)

Instrument	Gas	Span	Reading	Method
PID: OVM, 10.6 or 11.8 eV bulb	100 ppm isobutylene	RF = 1.0	100 ppm	1.5 lpm reg T-tubing
PID: MiniRAE, 10.6 eV bulb	100 ppm isobutylene	CF = 100	100 ppm	1.5 lpm reg T-tubing
PID: TVA 1000	100 ppm isobutylene	CF = 1.0	100 ppm	1.5 lpm reg T-tubing

5.3 Air Sampling

Sampling, in addition to real-time monitoring, may be required by other OSHA regulations where there may be exposure to certain contaminants. Air sampling typically is required when site contaminants include lead, cadmium, arsenic, asbestos, and certain volatile organic compounds. Contact the HSM immediately if these contaminants are encountered.

Method Description

N/A

Personnel and Areas

Results must be sent immediately to the HSM. Regulations may require reporting to monitored personnel. Results reported to:

HSM: N/A
Other: N/A

6 Decontamination

(Reference CH2M HILL SOP HS-13, *Decontamination*)

The SSC must establish and monitor the decontamination procedures and their effectiveness. Decontamination procedures found to be ineffective will be modified by the SSC. The SSC must ensure that procedures are established for disposing of materials generated on the site.

6.1 Decontamination Specifications

Personnel

- Boot wash/rinse
- Glove wash/rinse
- Outer-glove removal
- Body-suit removal
- Inner-glove removal
- Respirator removal
- Hand wash/rinse
- Face wash/rinse
- Shower ASAP
- Dispose of PPE in municipal trash, or contain for disposal
- Dispose of personnel rinse water to facility or sanitary sewer, or contain for offsite disposal

Sample Equipment

- Wash/rinse equipment
-

Heavy Equipment

- Power wash
- Steam clean
- Dispose of equipment rinse water to facility or sanitary sewer, or contain for offsite disposal

6.2 Diagram of Personnel-Decontamination Line

No eating, drinking, or smoking is permitted in contaminated areas and in exclusion or decontamination zones. The SSC should establish areas for eating, drinking, and smoking. Contact lenses are not permitted in exclusion or decontamination zones.

Figure 6-1 illustrates a conceptual establishment of work zones, including the decontamination line. Work zones are to be modified by the SSC to accommodate task-specific requirements.

7 Spill-Containment Procedures

Sorbent material will be maintained in the support zone. Incidental spills will be contained with sorbent and disposed of properly.

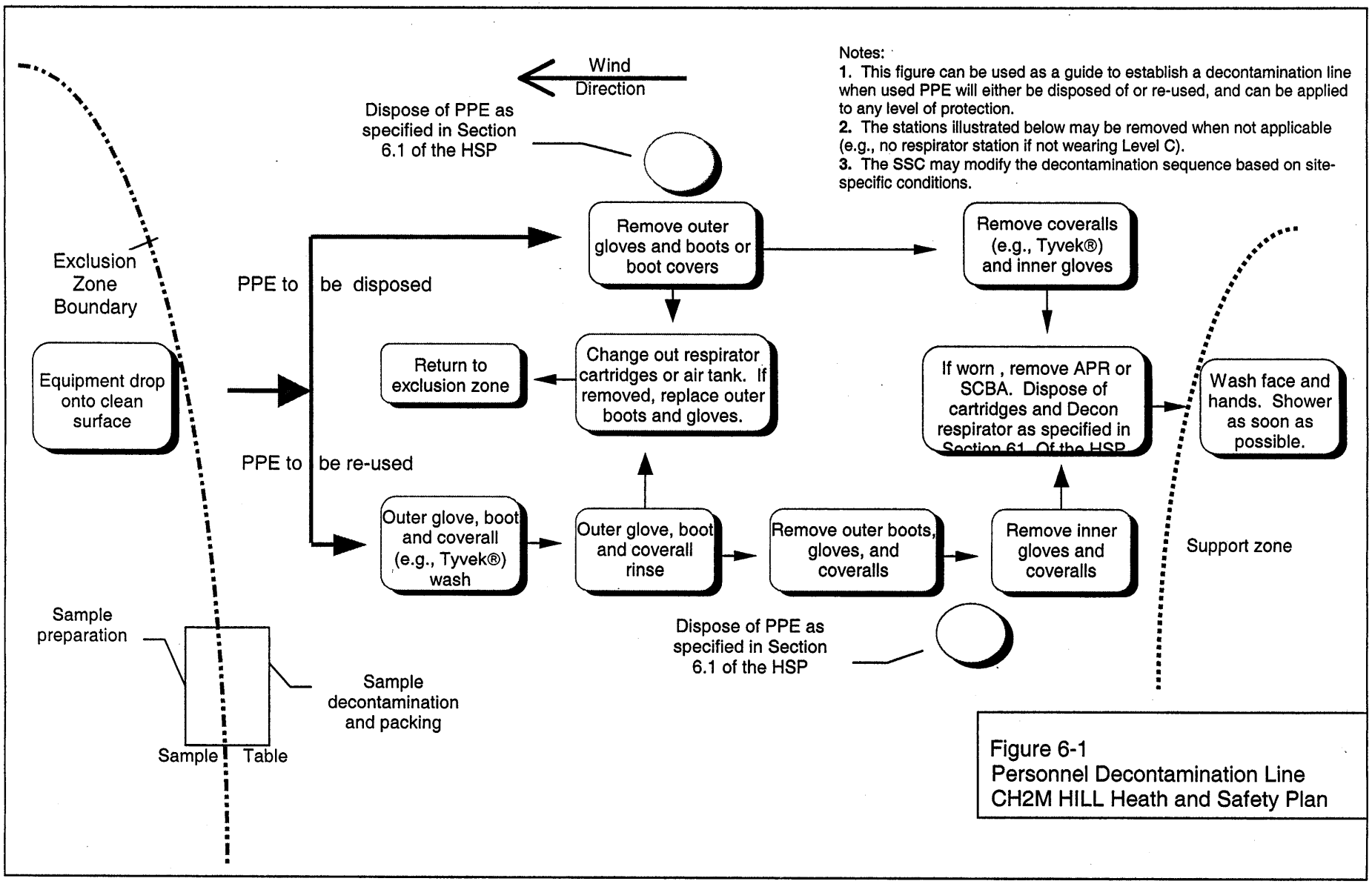

Notes:
1. This figure can be used as a guide to establish a decontamination line when used PPE will either be disposed of or re-used, and can be applied to any level of protection.
2. The stations illustrated below may be removed when not applicable (e.g., no respirator station if not wearing Level C).
3. The SSC may modify the decontamination sequence based on site-specific conditions.

Figure 6-1
Personnel Decontamination Line
CH2M HILL Heath and Safety Plan

8 Site-Control Plan

8.1 Site-Control Procedures

(Reference CH2M HILL SOP HS-11, *Site Control)*

- The SSC will conduct a site safety briefing (see below) before starting field activities or as tasks and site conditions change.
- Topics for briefing on site safety: general discussion of Health and Safety Plan, site-specific hazards, locations of work zones, PPE requirements, equipment, special procedures, emergencies.
- The SSC records attendance at safety briefings in a logbook and documents the topics discussed.
- Post the OSHA job-site poster in a central and conspicuous location in accordance with CH2M HILL SOP HS-71, *OSHA Postings*.
- Establish support, decontamination, and exclusion zones. Delineate with flags or cones as appropriate. Support zone should be upwind of the site. Use access control at entry and exit from each work zone.
- Establish onsite communication consisting of the following:
  - Line-of-sight and hand signals
  - Air horn
  - Two-way radio or cellular telephone if available
- Establish offsite communication.
- Establish and maintain the "buddy system."
- Initial air monitoring is conducted by the SSC in appropriate level of protection.
- The SCC is to conduct periodic inspections of work practices to determine the effectiveness of this plan – refer to Sections 2 and 3. Deficiencies are to be noted, reported to the HSM, and corrected.

8.2 Hazwoper Compliance Plan

(Reference CH2M HILL SOP HS-19, *Site-Specific Written Safety Plans)*

Certain parts of the site work are covered by state or federal Hazwoper standards and therefore require training and medical monitoring. Anticipated Hazwoper tasks (Section 1.1.1) might occur consecutively or concurrently with respect to non-Hazwoper tasks. This section outlines procedures to be followed when approved activities specified in Section 1.1.2 do not require 24- or 40-hour training. Non-Hazwoper-trained personnel also must be trained in accordance with all other state and federal OSHA requirements.

- In many cases, air sampling, in addition to real-time monitoring, must confirm that there is no exposure to gases or vapors before non-Hazwoper-trained personnel are allowed on the site, or while non-Hazwoper-trained staff are working in proximity to Hazwoper activities. Other data (e.g., soil) also must document that there is no potential for exposure. The HSM must approve the interpretation of these data. Refer to subsections 2.5 and 5.3 for contaminant data and air sampling requirements, respectively.
- When non-Hazwoper-trained personnel are at risk of exposure, the SSC must post the exclusion zone and inform non-Hazwoper-trained personnel of the:
  - nature of the existing contamination and its locations
  - limitations of their access
  - emergency action plan for the site
- Periodic air monitoring with direct-reading instruments conducted during regulated tasks also should be used to ensure that non-Hazwoper-trained personnel (e.g., in an adjacent area) are not exposed to airborne contaminants.
- When exposure is possible, non-Hazwoper-trained personnel must be removed from the site until it can be demonstrated that there is no longer a potential for exposure to health and safety hazards.
- Remediation treatment system start-ups: Once a treatment system begins to pump and treat contaminated media, the site is, for the purposes of applying the Hazwoper standard, considered a treatment, storage, and disposal facility (TSDF). Therefore, once the system begins operation, only Hazwoper-trained personnel (minimum of 24 hour of training) will be permitted to enter the site. All non-Hazwoper-trained personnel must not enter the TSDF area of the site.

9 Emergency Response Plan

(Reference CH2M HILL, SOP HS-12, *Emergency Response*)

9.1 Pre-Emergency Planning

The SSC performs the applicable pre-emergency planning tasks before starting field activities and coordinates emergency response with CH2M HILL onsite parties, the facility, and local emergency-service providers as appropriate.

- Review the facility emergency and contingency plans where applicable.
- Determine what onsite communication equipment is available (e.g., two-way radio, air horn).
- Determine what offsite communication equipment is needed (e.g., nearest telephone, cell phone).
- Confirm and post emergency telephone numbers, evacuation routes, assembly areas, and route to hospital; communicate the information to onsite personnel.
- Field Trailers: Post "Exit" signs above exit doors, and post "Fire Extinguisher" signs above locations of extinguishers. Keep areas near exits and extinguishers clear.
- Review changed site conditions, onsite operations, and personnel availability in relation to emergency response procedures.
- Where appropriate and acceptable to the client, inform emergency room and ambulance and emergency response teams of anticipated types of site emergencies.
- Designate one vehicle as the emergency vehicle; place hospital directions and map inside; keep keys in ignition during field activities.
- Inventory and check site emergency equipment, supplies, and potable water.
- Communicate emergency procedures for personnel injury, exposures, fires, explosions, and releases.
- Rehearse the emergency response plan before site activities begin, including driving route to hospital.
- Brief new workers on the emergency response plan.

The SSC will evaluate emergency response actions and initiate appropriate follow-up actions.

9.2 Emergency Equipment and Supplies

The SSC should mark the locations of emergency equipment on the site map and post the map.

Emergency Equipment and Supplies	Location
20 LB (or two 10-lb) fire extinguisher (A, B, and C classes)	Support Zone/Heavy Equipment
First aid kit	Support Zone/Field Vehicle
Eye Wash	Support & Decon Zone/Field Vehicle
Potable water	Support & Decon Zone/Field Vehicle
Bloodborne-pathogen kit	Support Zone/Field Vehicle
Additional equipment (specify):	

9.3 Incident Response

In fires, explosions, or chemical releases, actions to be taken include the following:

- Shut down CH2M HILL operations and evacuate the immediate work area.
- Notify appropriate response personnel.
- Account for personnel at the designated assembly area(s).
- Assess the need for site evacuation, and evacuate the site as warranted.

Instead of implementing a work-area evacuation, note that small fires or spills posing minimal safety or health hazards may be controlled.

9.4 Emergency Medical Treatment

The procedures listed below may also be applied to non-emergency incidents. Injuries and illnesses (including overexposure to contaminants) must be reported to Human Resources. If there is doubt about whether medical treatment is necessary, or if the injured person is reluctant to accept medical treatment, contact the CH2M HILL medical consultant. During non-emergencies, follow these procedures as appropriate.

- Notify appropriate emergency response authorities listed in Section 9.8 (e.g., 911).
- The SCC will assume charge during a medical emergency until the ambulance arrives or until the injured person is admitted to the emergency room.
- Prevent further injury.
- Initiate first aid and CPR where feasible.
- Get medical attention immediately.
- Perform decontamination where feasible; lifesaving and first aid or medical treatment take priority.
- Make certain that the injured person is accompanied to the emergency room.
- When contacting the medical consultant, state that the situation is a CH2M HILL matter, and give your name and telephone number, the name of the injured person, the extent of the injury or exposure, and the name and location of the medical facility where the injured person was taken.
- Report incident as outlined in Section 9.7.

9.5 Evacuation

- Evacuation routes and assembly areas (and alternative routes and assembly areas) are specified on the site map.
- Evacuation route(s) and assembly area(s) will be designated by the SSC before work begins.
- Personnel will assemble at the assembly area(s) upon hearing the emergency signal for evacuation.
- The SSC and a "buddy" will remain on the site after the site has been evacuated (if safe) to assist local responders and advise them of the nature and location of the incident.
- The SSC will account for all personnel in the onsite assembly area.
- A designated person will account for personnel at alternate assembly area(s).
- The SSC will write up the incident as soon as possible after it occurs and submit a report to the Corporate Director of Health and Safety.

9.6 Evacuation Signals

Signal	Meaning
Grasping throat with hand	Emergency-help me.
Thumbs up	OK; understood.
Grasping buddy's wrist	Leave area now.
Continuous sounding of horn	Emergency; leave site now.

9.7 Incident Notification and Reporting

- Upon any project incident (fire, spill, injury, near miss, death, etc.), immediately notify the PM and HSM. Call emergency beeper number if HSM is unavailable.
- For CH2M HILL work-related injuries or illnesses, contact and help Human Resources administrator complete an Incident Report Form (IRF). IRF must be completed within 24 hours of incident.
- For CH2M HILL subcontractor incidents, complete the Subcontractor Accident/Illness Report Form and submit to the HSM.
- Notify and submit reports to client as required in contract.

10 Approval

This site-specific Health and Safety Plan has been written for use by CH2M HILL only. CH2M HILL claims no responsibility for its use by others unless that use has been specified and defined in project or contract documents. The plan is written for the specific site conditions, purposes, dates, and personnel specified and must be amended if those conditions change.

10.1 Original Plan

Written By: Rick Cavil/SJC **Date: 06/03/2002**

Approved By: Rick Cavil/SJC **Date: 06/04/2002**

10.2 Revisions

Revisions Made By: Bob Collar **Date:09/02/02**

Revisions to Plan: Introductory information, site staffing, contacts, contaminant levels,

---

Revisions Approved By: Rick Cavil/SJC **Date:10/23/2002**

---

11 Attachments

Attachment 1: **Employee Signoff Form – Field Safety Instructions**
Attachment 2: **Project-Specific Chemical Product Hazard Communication Form**
Attachment 3: **Chemical-Specific Training Form**
Attachment 4: **Emergency Contacts**
Attachment 5: **Project Activity Self-Assessment Checklists**
Attachment 6: **Applicable Material Safety Data Sheets**

CH2MHILL

EMPLOYEE SIGNOFF FORM

Health and Safety Plan

- The CH2M HILL project employees and subcontractors listed below have been provided with a copy of this HSP, have read and understood it, and agree to abide by its provisions.

Project Name: Area 3 Well Installation and Sampling **Project Number:** 175859.FI.03

EMPLOYEE NAME (Please print)	EMPLOYEE SIGNATURE	COMPANY	DATE

CH2MHILL

Project-Specific Chemical Product Hazard Communication Form

This form must be completed prior to performing activities that expose personnel to hazardous chemicals products. Upon completion of this form, the SSC shall verify that training is provided on the hazards associated with these chemicals and the control measures to be used to prevent exposure to CH2M HILL and subcontractor personnel. Labeling and MSDS systems will also be explained.

Project Name: Area 3 Well Installation and Sampling **Project Number:** 175859.FI.03

MSDSs will be maintained at the following location(s): SCO and FSP

Hazardous Chemical Products Inventory

Chemical	Quantity	Location	MSDS Available	Container labels	
				Identity	Hazard

Refer to SOP HS-05 *Hazard Communication* for more detailed information.

CH2MHILL

CHEMICAL-SPECIFIC TRAINING FORM

Location:	Project # :
HCC:	Trainer:

TRAINING PARTICIPANTS:

NAME	SIGNATURE	NAME	SIGNATURE

REGULATED PRODUCTS/TASKS COVERED BY THIS TRAINING:

The HCC shall use the product MSDS to provide the following information concerning each of the products listed above.

☐ Physical and health hazards

☐ Control measures that can be used to provide protection (including appropriate work practices, emergency procedures, and personal protective equipment to be used)

☐ Methods and observations used to detect the presence or release of the regulated product in the workplace (including periodic monitoring, continuous monitoring devices, visual appearance or odor of regulated product when being released, etc.)

Training participants shall have the opportunity to ask questions concerning these products and, upon completion of this training, will understand the product hazards and appropriate control measures available for their protection.

Copies of MSDSs, chemical inventories, and CH2M HILL's written hazard communication program shall be made available for employee review in the facility/project hazard communication file.

Emergency Contacts

24-hour CH2M HILL Emergency Beeper – 888/444-1226

Medical Emergency – 911
Facility Medical Response #:
Local Ambulance #:

CH2M HILL Medical Consultant
Health Resources
Dr. Jerry H. Berke, M.D., M.P.H.
600 West Cummings Park, Suite 3400
Woburn, MA 01801-6350
1-781-938-4653 1-800-350-4511
(After hours calls will be returned within 20 minutes)

Fire/Spill Emergency -- 911
Facility Fire Response #:
Local Fire Dept #:

Local Occupational Physician

Security & Police – 911
Facility Security #:
Local Police #:

Corporate Director Health, Safety & Environment
Name: Dave Waite/SEA
Phone: 425/453-5000
24-hour emergency beeper: 888-444-1226

Utilities Emergency
Water:
Gas:
Electric:

Health & Safety Manager (HSM)
Name: Rick Cavil/SJC
Phone: 408/436-4909 x429

Safety Coordinator (SC)
Name: Vikus Mathur/SCO
Phone: 714-429-2020, ext. 2110

Regional Human Resources Department
Name: Lisa Covey/SAC
Phone: 916/920-0300 x253

Project Manager (PM)
Name: Bob Collar/SCO
Phone: 714-429-2020, ext. 2274 (w)
714-838-2737 (h)

Corporate Human Resources Department
Name: Pete Hannan/COR
Phone: 303/771-0900

Federal Express Dangerous Goods Shipping
Phone: 800/238-5355

CH2M HILL Emergency Number for Shipping Dangerous Goods
Phone: 800/255-3924

Worker's Compensation:
Contact Regional HR dept. to have form completed or contact Julie Zimmerman after hours: 303/664-3304

Automobile Accidents:
Rental: Carol Dietz/COR 303/713-2757
CH2M HILL owned vehicle:
Zurich Insurance Co. 800/987-3373

Contact the PM. Generally, the PM will contact relevant government agencies.

Hospital Name/Address: Alhambra Hospital
100 S. Raymond Ave., Alhambra CA 91801

Hospital Phone #:
626/570-1606

Directions to Hospital

Include written directions here, and attach or post a highlighted map if needed.

CH2M HILL HEALTH AND SAFETY PLAN

Attachment 5

Project Activity Self-Assessment Checklists

H&S Self-Assessment Checklist - DRILLING

This checklist shall be used by CH2M HILL personnel **only** and shall be completed at the frequency specified in the project's HSP/FSI.

This checklist is to be used at locations where: 1) CH2M HILL employees are potentially exposed to hazards associated with drilling operations (complete Sections 1 and 3), and/or 2) CH2M HILL oversight of a drilling subcontractor is required (complete entire checklist).

SSC/DSC may consult with drilling subcontractors when completing this checklist, but shall not direct the means and methods of drilling operations nor direct the details of corrective actions. Drilling subcontractors shall determine how to correct deficiencies and we must carefully rely on their expertise. Items considered to be imminently dangerous (possibility of serious injury or death) shall be corrected immediately or all exposed personnel shall be removed from the hazard until corrected.

Completed checklists shall be sent to the health and safety manager for review.

Project Name: _____ Project No.: _____

Location: _____ PM: _____

Auditor: _____ Title: _____ Date: _____

This specific checklist has been completed to:

☐ Evaluate CH2M HILL employee exposures to drilling hazards
☐ Evaluate a CH2M HILL subcontractor's compliance with drilling H&S requirements
Subcontractors Name: _____

- Check "Yes" if an assessment item is complete/correct.
- Check "No" if an item is incomplete/deficient. Deficiencies shall be brought to the immediate attention of the drilling subcontractor. Section 3 must be completed for all items checked "No."
- Check "N/A" if an item is not applicable.
- Check "N/O" if an item is applicable but was not observed during the assessment.

Numbers in parentheses indicate where a description of this assessment item can be found in Standard of Practice HS-35.

SECTION 1	Yes	No	N/A	N/O
PERSONNEL SAFE WORK PRACTICES (3.1)				
1. Only authorized personnel operating drill rig	☐	☐	☐	☐
2. Personnel cleared during rig startup	☐	☐	☐	☐
3. Personnel clear of rotating parts	☐	☐	☐	☐
4. Personnel not positioned under hoisted loads	☐	☐	☐	☐
5. Loose clothing and jewelry removed	☐	☐	☐	☐
6. Personnel instructed not to approach equipment that has become electrically energized	☐	☐	☐	☐
7. Smoking is prohibited around drilling operation	☐	☐	☐	☐
8. Personnel wearing appropriate PPE, per HSP/FSI	☐	☐	☐	☐

SECTION 2	Yes	No	N/A	N/O
GENERAL (3.2.1)				
9. Daily safety briefing/meeting conducted with crew	☐	☐	☐	☐
10. Daily inspection of drill rig and equipment conducted before use	☐	☐	☐	☐
DRILL RIG PLACEMENT (3.2.2)				
11. Location of underground utilities identified	☐	☐	☐	☐
12. Safe clearance distance maintained from overhead powerlines	☐	☐	☐	☐
13. Drilling pad established, when necessary	☐	☐	☐	☐
14. Drill rig leveled and stabilized	☐	☐	☐	☐
DRILL RIG TRAVEL (3.2.3)				
15. Rig shut down and mast lowered and secured prior to rig movement	☐	☐	☐	☐
16. Tools and equipment secured prior to rig movement	☐	☐	☐	☐
17. Only personnel seated in cab are riding on rig during movement	☐	☐	☐	☐
18. Safe clearance distance maintained while traveling under overhead powerlines	☐	☐	☐	☐
19. Backup alarm or spotter used when backing rig	☐	☐	☐	☐
DRILL RIG OPERATION (3.2.4)				
20. Kill switch clearly identified and operational	☐	☐	☐	☐
21. All machine guards are in place	☐	☐	☐	☐
22. Rig ropes not wrapped around body parts	☐	☐	☐	☐
23. Pressurized lines and hoses secured from whipping hazards	☐	☐	☐	☐
24. Drill operation stopped during inclement weather	☐	☐	☐	☐
25. Air monitoring conducted per HSP/FSI for hazardous atmospheres	☐	☐	☐	☐
26. Rig placed in neutral when operator not at controls	☐	☐	☐	☐
DRILL RIG MAINTENANCE (3.2.5)				
27. Defective components repaired immediately	☐	☐	☐	☐
28. Lockout/tagout procedures used prior to maintenance	☐	☐	☐	☐
29. Cathead in clean, sound condition	☐	☐	☐	☐
30. Drill rig ropes in clean, sound condition	☐	☐	☐	☐
31. Fall protection used for fall exposures of 6 feet or greater	☐	☐	☐	☐
32. Rig in neutral and augers stopped rotating before cleaning	☐	☐	☐	☐
33. Good housekeeping maintained on and around rig	☐	☐	☐	☐
DRILLING AT HAZARDOUS WASTE SITES (3.2.6)				
34. Waste disposed of according to HSP	☐	☐	☐	☐
35. Appropriate decontamination procedures being followed, per HSP	☐	☐	☐	☐

SECTION 3

Complete this section for all items checked "No" in Sections 1 or 2. Deficient items must be corrected in a timely manner.

Item #	Corrective Action Planned/Taken	Date Corrected

Applicable Material Safety Data Sheets

AIR LIQUIDE AMERICA CORP-FMLY BIG THREE INDUS -- ISOBUTYLENE - CALIBRATION GAS CYLI
MATERIAL SAFETY DATA SHEET
NSN: 6665012148247
Manufacturer's CAGE: 17688
Part No. Indicator: A
Part Number/Trade Name: ISOBUTYLENE

==========

General Information

==========

Item Name: CALIBRATION GAS CYLINDER
Company's Name: AIR LIQUIDE AMERICA CORP-FMLY BIG THREE INDUSTRIES
Company's Street: 3535 W 12TH ST
Company's P. O. Box: 3047
Company's City: HOUSTON
Company's State: TX
Company's Country: US
Company's Zip Code: 77253
Company's Emerg Ph #: 800-424-9300 CHEMTREC
Company's Info Ph #: 713-868-0440 FAX: 800-231-1366
Distributor/Vendor # 1: HNU SYSTEMS INC
Distributor/Vendor # 1 Cage: 57631
Record No. For Safety Entry: 001
Tot Safety Entries This Stk#: 005
Status: SE
Date MSDS Prepared: 20FEB97
Safety Data Review Date: 19AUG97
Supply Item Manager: CX
MSDS Preparer's Name: UNKNOWN
Preparer's Company: CHEMICAL SAFETY ASSOCIATES, INC.
Preparer's St Or P. O. Box: 9163 CHESAPEAKE DR
Preparer's City: SAN DIEGO
Preparer's State: CA
Preparer's Zip Code: 92123-1002
MSDS Serial Number: CFCVY
Specification Number: NONE
Spec Type, Grade, Class: NONE
Hazard Characteristic Code: G3
Unit Of Issue: EA
Unit Of Issue Container Qty: 0.6 LB
Type Of Container: CYLINDER
Net Unit Weight: 0.6

==========

Ingredients/Identity Information

==========

Proprietary: NO
Ingredient: ISOBUTYLENE (CYLINDER CONTAINS 75 PPM IN AIR).
Ingredient Sequence Number: 01
Percent: <1
NIOSH (RTECS) Number: UD0890000
CAS Number: 115-11-7
OSHA PEL: NOT ESTABLISHED
ACGIH TLV: NOT ESTABLISHED
Other Recommended Limit: NONE RECOMMENDED

Proprietary: NO
Ingredient: AIR
Ingredient Sequence Number: 02
Percent: 99
NIOSH (RTECS) Number: 1005486AI
OSHA PEL: NOT ESTABLISHED
ACGIH TLV: NOT ESTABLISHED
Other Recommended Limit: NONE RECOMMENDED

==========

Physical/Chemical Characteristics

Appearance And Odor: COLORLESS GAS: ODOR SIMILAR TO BURNING COAL.
Boiling Point: 19.6F,-6.9C
Melting Point: -220F,-140C
Vapor Pressure (MM Hg/70 F): 1233
Vapor Density (Air=1): 0.15LB/FT3
Specific Gravity: 1.997
Evaporation Rate And Ref: NOT APPLICABLE
Solubility In Water: INSOLUBLE
Autoignition Temperature: 869F

Fire and Explosion Hazard Data

Flash Point: 14F,-10C
Lower Explosive Limit: 1.8
Upper Explosive Limit: 9.6
Extinguishing Media: SHUT OFF SOURCE OF GAS. USE WATER SPRAY TO COOL FIRE EXPOSED CYLINDERS, STRUCTURES AND EQUIPMENT.
Special Fire Fighting Proc: STRUCTURAL FIREFIGHTERS MUST WEAR SELF-CONTAINED BREATHING APPARATUS. BECAUSE OF DANGER OF BLEVE, EVACUATION OF NON-EMERGENCY PERSONNEL IS ESSENTIAL.
Unusual Fire And Expl Hazrds: DANGER! FIRES IMPINGING ON OUTSIDE SURFACE OF UNPROTECTED CYLINDERS CAN BE VERY DANGEROUS. EXPOSURE TO FIRE CAN CAUSE CATASTROPHIC FAILURE OF THE CYLINDER.

Reactivity Data

Stability: YES
Cond To Avoid (Stability): CONTACT WITH INCOMPATIBLE MATERIALS AND EXPOSURE TO HEAT, SPARKS, OTHER SOURCES OF IGNITION.
Materials To Avoid: STRONG OXIDIZING AGENTS (EG. CHLORINE, BROMINE PENTAFLUORIDE, OXYGEN, OXYGEN DIFLUORIDE, NITROGEN TRIFLUORIDE).
Hazardous Decomp Products: WHEN IGNITED IN PRESENCE OF OXYGEN-CARBON MONOXIDE AND CARBON DIOXIDE.
Hazardous Poly Occur: NO
Conditions To Avoid (Poly): WILL NOT OCCUR.

Health Hazard Data

LD50-LC50 Mixture: LC50 (INHALATION, RAT)-620,000 MG/KG/4HR
Route Of Entry - Inhalation: YES
Route Of Entry - Skin: NO
Route Of Entry - Ingestion: NO
Health Haz Acute And Chronic: ISOBUTYLENE MAY CAUSE SOME IRRITATION OF MUCOUS MEMBRANES. IN ADDITION, CONTACT WITH RAPIDLY EXPANDING GASES CAN CAUSE FROSTBITE TO EXPOSED TISSUE. ISOBUTYLENE IS NOT KNOWN TO CAUSE SENSITIZATION IN HUMANS. CURRENTLY, BIOLOGICAL EXPOSURE INDICES (BEI'S) ARE NOT APPLICABLE FOR ISOBUTYLENE.
Carcinogenicity - NTP: NO
Carcinogenicity - IARC: NO
Carcinogenicity - OSHA: NO
Explanation Carcinogenicity: ISOBUYLENE IS NOT FOUND ON THE FOLLOWING LISTS: FEDERAL OSHA Z LIST, NTP, IARC, CAL/OSHA.
Signs/Symptoms Of Overexp: IRRITATION OF MUCOUS MEMBRANES; FROSTBITE TO EXPOSED TO TISSUE.
Med Cond Aggravated By Exp: ACUTE OR CHRONIC RESPIRATORY CONDITIONS MAY BE AGGRAVATED BY OVEREXPOSURE TO THE COMPONENTS OF THIS PRODUCT.
Emergency/First Aid Proc: ADMINISTER OXYGEN, IF NECESSARY; TREAT SYMPTOMS; REDUCE OR ELIMINATE EXPOSURE.

Precautions for Safe Handling and Use

Steps If Matl Released/Spill: EVACUATE IMMEDIATE AREA. UNCONTROLLED

RELEASES SHOULD BE RESPONDED TO BY TRAINED PERSONNEL USING PRE-PLANNED PROCEDURES. PROPER PROTECTIVE EQUIPMENT SHOULD BE USED. IN CASE OF GAS RELEASE, CLEAR THE AFFECTED AREA, PROTECT PEOPLE AND RESPOND.
Neutralizing Agent: NONE SPECIFIED BY MANUFACTURER.
Waste Disposal Method: WASTE DISPOSAL MUST BE IN ACCORDANCE WITH APPROPRIATE LOCAL, STATE AND FEDERAL REGULATIONS. RETURN CYLINDERS WITH ANY RESIDUAL PRODUCT TO AIR LIQUIDE. DO NOT DISPOSE OF LOCALLY.
Precautions-Handling/Storing: STORE UPRIGHT & FIRMLY SECURED TO PREVENT FALLING OR BEING KNOCKED OVER. STORE IN A COOL, DRY, WELL-VENTILATED PLACE AWAY FROM SOURCES OF HEAT.
Other Precautions: KEEP STORAGE AREA CLEAR OF MATERIALS WHICH MAY BURN. DO NOT ALLOW AREA WHERE CYLINDERS ARE STORED TO EXCEED 125F (52C). STORE CYLINDERS AWAY FROM HEAVILY TRAFFICKED AREAS AND EMERGENCY EXITS. PROTECT AGAINST PHYSICAL DAMAGE.

Control Measures

Respiratory Protection: MAINTAIN OXYGEN LEVELS ABOVE 19.5% IN THE WORKPLACE. USE SUPPLIED AIR RESPIRATORY PROTECTION IF OXYGEN LEVELS ARE BELOW 19.5% OR DURING EMERGENCY RESPONSE TO A RELEASE OF THIS PRODUCT. FOLLOW 29 CFR 1910.134 OR EQUIVALENT STATE STANDARDS.
Ventilation: USE EXPLOSION-PROOF LOCAL EXHAUST VENTILATION TO PREVENT ISOBUTYLENE CONCENTRATION FROM EXCEEDING LEL OF 1.8%.
Protective Gloves: LEATHER GLOVES WHEN HANDLING CYLINDERS.
Eye Protection: SAFETY GLASSES.
Other Protective Equipment: USE BODY PROTECTION APPROPRIATE FOR TASK. COTTON CLOTHING RECOMMENDED TO PREVENT STATIC BUILD-UP.
Work Hygienic Practices: WASH HANDS AFTER HANDLING AND BEFORE EATING, DRINKING, OR SMOKING. LAUNDER CONTAMINATED CLOTHES BEFORE REUSE.
Suppl. Safety & Health Data: HNU P/N IS: 101-350-N. MSDS BY MFR WRITTEN FOR "PURE" ISOBUTYLENE; PHYSICAL & FIRE DATA AREAS ARE FOR PURE IOSBUTYLENE. THIS NSN IS FOR A CYLINDER CONTAINING 75-150 PPM (<1%) OF ISOBUTYLENE.

Transportation Data

Trans Data Review Date: 97231
DOT PSN Code: DQQ
DOT Proper Shipping Name: COMPRESSED GASES, N.O.S.
DOT Class: 2.2
DOT ID Number: UN1956
DOT Label: NONFLAMMABLE GAS
IMO PSN Code: EQH
IMO Proper Shipping Name: COMPRESSED GAS, N.O.S. o
IMO Regulations Page Number: 2124
IMO UN Number: 1956
IMO UN Class: 2(2.2)
IMO Subsidiary Risk Label: -
IATA PSN Code: HDO
IATA UN ID Number: 1956
IATA Proper Shipping Name: COMPRESSED GAS, N.O.S. *
IATA UN Class: 2.2
IATA Label: NON-FLAMMABLE GAS
AFI PSN Code: HDO
AFI Prop. Shipping Name: COMPRESSED GAS, N.O.S.
AFI Class: 2.2
AFI ID Number: UN1956
AFI Basic Pac Ref: A6.3,A6.5,A6.7
N.O.S. Shipping Name: CONTAINS ISOBUTYLENE AND AIR
Additional Trans Data: CYLINDER CONTAINS 75-150 PPM ISOBUTYLENE IN AIR. WEIGHT OF GAS MIXTURE IN EACH CYLINDER IS 0.6 LBS. WT OF EMPTY CYLINDER IS 2.4 LBS.

Disposal Data

==========
==========

Label Data

==========

Label Required: YES
Technical Review Date: 19AUG97
Label Status: F
Common Name: ISOBUTYLENE
Chronic Hazard: NO
Signal Word: WARNING!
Acute Health Hazard-Slight: X
Contact Hazard-Slight: X
Fire Hazard-None: X
Reactivity Hazard-None: X
Special Hazard Precautions: CONTENTS UNDER PRESSURE! ISOBUTYLENE MAY CAUSE SOME IRRITATION OF MUCOUS MEMBRANES. IN ADDITION, CONTACT WITH RAPIDLY EXPANDING GASES CAN CAUSE FROSTBITE TO EXPOSED TISSUE. ISOBUTYLENE IS NOT KNOWN TO CAUSE SENSITIZATION IN HUMANS. CURRENTLY, BIOLOGICAL EXPOSURE RESPIRATORY SYSTEM. FIRST AID: ADMINISTER OXYGEN, IF NECESSARY; TREAT SYMPTOMS; REDUCE OR ELIMINATE EXPOSURE.
Protect Eye: Y
Protect Skin: Y
Protect Respiratory: Y
Label Name: AIR LIQUIDE AMERICA CORP-FMLY BIG THREE INDUSTRIES
Label Street: 3535 W 12TH ST
Label P.O. Box: 3047
Label City: HOUSTON
Label State: TX
Label Zip Code: 77253
Label Country: US
Label Emergency Number: 800-424-9300 CHEMTREC
Year Procured: 1995

BOC GASES

MATERIAL SAFETY DATA SHEET

PRODUCT NAME: PENTANE

1. Chemical Product and Company Identification

BOC Gases,
Division of,
The BOC Group, Inc.
575 Mountain Avenue
Murray Hill, NJ 07974

TELEPHONE NUMBER: (908) 464-8100
24-HOUR EMERGENCY TELEPHONE NUMBER: CHEMTREC (800) 424-9300

BOC Gases
Division of
BOC Canada Limited
5975 Falbourne Street, Unit 2
Mississauga, Ontario L5R 3W6

TELEPHONE NUMBER: (905) 501-1700
24-HOUR EMERGENCY TELEPHONE NUMBER: (905) 501-0802
EMERGENCY RESPONSE PLAN NO: 2-0101

PRODUCT NAME: PENTANE
CHEMICAL NAME: Pentane
COMMON NAMES/SYNONYMS: Amyl hydride
TDG (Canada) CLASSIFICATION: 3
WHMIS CLASSIFICATION: A, B1, D2B

PREPARED BY: Loss Control (908)464-8100/(905)501-1700
PREPARATION DATE: 6/1/95
REVIEW DATES: 4/5/01

2. Composition, Information on Ingredients

EXPOSURE LIMITS[1]:

INGREDIENT	% VOLUME	PEL-OSHA[2]	TLV-ACGIH[3]	LD_{50} or LC_{50} Route/Species
Pentane FORMULA: C_5H_{12} CAS: 109-66-0 RTECS #: RZ9450000	100	1000 ppm TWA	600 ppm TWA	LC_{50}: 123,000 ppm inhalation/rat (4 H)

[1] Refer to individual state of provincial regulations, as applicable, for limits which may be more stringent than those listed here.
[2] As stated in 29 CFR 1910, Subpart Z (revised July 1, 1993)
[3] As stated in the ACGIH 2001 Threshold Limit Values for Chemical Substances and Physical Agents.

OSHA Regulatory Status: This material is classified as hazardous under OSHA regulations.

3. Hazards Identification

EMERGENCY OVERVIEW

Odorless, colorless flammable gas. Dangerous fire and explosion hazard. Avoid heat, sparks and flames. Vapors irritating to the eyes and respiratory system. Skin contact may cause irritation and dermatitis. Inhalation of vapors may cause dizziness, headache and nausea. High concentrations paralyze the central nervous system, causing loss of consciousness and respiratory paralysis. Contents under pressure. Use and store below 125 °F.

ROUTE OF ENTRY:

Skin Contact	Skin Absorption	Eye Contact	Inhalation	Ingestion
Yes	No	Yes	Yes	No

HEALTH EFFECTS:

Exposure Limits Yes	Irritant Yes	Sensitization No
Teratogen No	Reproductive Hazard No	Mutagen No
Synergistic Effects None Reported		

Carcinogenicity: – NTP: No IARC: No OSHA: No

EYE EFFECTS:
Vapors may cause mild irritation of the eyes.

SKIN EFFECTS:
Vapors may cause mild irritation and dermatitis to the skin.

INGESTION EFFECTS:
None expected.

INHALATION EFFECTS:
Inhalation of vapors may cause dizziness, headache and nausea. High concentrations paralyze the central nervous system, causing loss of consciousness and respiratory paralysis.

MEDICAL CONDITIONS AGGRAVATED BY EXPOSURE: None known.

NFPA HAZARD CODES		HMIS HAZARD CODES		RATINGS SYSTEM
Health:	1	Health:	1	0 = No Hazard
Flammability:	4	Flammability:	4	1 = Slight Hazard
Instability:	0	Reactivity:	0	2 = Moderate Hazard
				3 = Serious Hazard
				4 = Severe Hazard

4. First Aid Measures

EYES:
Flush eyes with water for 15 minutes. If irritation persists, seek medical attention.

SKIN: Flush skin with water for 15 minutes. If irritation persists, seek medical attention.

INGESTION:
Not normally required.

INHALATION:
Conscious persons should be assisted to an uncontaminated area and inhale fresh air. Quick removal from the contaminated area is most important. Unconscious persons should be moved to an uncontaminated area and given artificial resuscitation an supplemental oxygen. Further treatment should be symptomatic and supportive.

PROMPT MEDICAL ATTENTION IS MANDATORY IN ALL CASES OF OVEREXPOSURE TO PENTANE. RESCUE PERSONNEL SHOULD BE EQUIPPED WITH SELF-CONTAINED BREATHING APPARATUS.

5. Fire Fighting Measures

Conditions of Flammability: Flammable liquid and vapor		
Flash point: -40 °F (-40 °C)	Method: Not Available	Autoignition Temperature: Not Available
LEL(%): 1.4	UEL(%): 7.8	
Hazardous combustion products: Carbon monoxide, carbon dioxide		
Sensitivity to mechanical shock: None		
Sensitivity to static discharge: None		

FIRE AND EXPLOSION HAZARDS:
Flammable liquid and vapor. Rapid flame propagation and flashback possible. Cylinder may rupture violently from pressure when involved in a fire situation.

EXTINGUISHING MEDIA:
Water (foam), dry chemical, carbon dioxide.

FIRE FIGHTING INSTRUCTIONS:
If possible, stop the flow of gas. Inerting the atmosphere to reduce oxygen levels may extinguish flame, allowing capping of leaking container. Do not attempt this unless specifically trained. Reduce the rate of flow and inject an inert gas, if possible, before completely stopping the flow to prevent flashback. Do not extinguish the fire until the supply is shut off as otherwise an explosive re-ignition may occur. If the fire is extinguished and the flow of gas continues, use increased ventilation to prevent build-up of explosive atmosphere. Use non-sparking tools to close container valves.

Use water spray to cool surrounding containers. Be cautious of a Boiling Liquid Evaporating Vapor Explosion, BLEVE, if flame is impinging on surrounding containers. Direct 500 GPM water stream onto containers above liquid level with remote monitors. Limit the number of personnel in proximity of fire and evacuate surrounding areas in all directions.

Firefighters should wear respiratory protection (SCBA) and full turnout or Bunker gear. Continue to cool fire-exposed cylinders until well after flames are extinguished.

6. Accidental Release Measures

Immediately extinguish all ignition sources. No smoking, flares, flames or sparks in hazard area. Evacuate all personnel from affected area. Use appropriate protective equipment. If leak is in user's equipment, be certain to purge piping with inert gas prior to attempting repairs. If leak is in container or container valve, contact the appropriate emergency telephone number listed in Section 1 or call your closest BOC location.

7. Handling and Storage

Electrical Classifications:
Class 1, Group not specified.

Earth-ground and bond all lines and equipment associated with the system. All equipment should be non-sparking or explosion proof.

Use only in well-ventilated areas. Valve protection caps must remain in place unless container is secured with valve outlet piped to use point. Do not drag, slide or roll cylinders. Use a suitable hand truck for cylinder movement.

Use a pressure reducing regulator when connecting cylinder to lower pressure piping or systems. Do not heat cylinder by any means to increase the discharge rate of product from the cylinder. Use a check valve or trap in the discharge line to prevent hazardous back flow into the cylinder.

Protect cylinders from physical damage. Store in cool, dry, well-ventilated area of non-combustible construction away from heavily trafficked areas and emergency exits. Do not allow the temperature where cylinders are stored to exceed 125°F (52°C). Cylinders should be stored upright and firmly secured to prevent falling or being knocked over. Full and empty cylinders should be segregated. Use a "first in-first out" inventory system to prevent full cylinders being stored for excessive periods of time. Post "NO SMOKING" signs in use and storage area. There should be no sources of ignition in areas where this product is being used or stored. Outside or detached storage is preferred.
Never carry a compressed gas cylinder of a gas in cryogenic liquid form in an enclosed space such as a car trunk, van or station wagon. A leak can result in a fire, explosion, asphyxiation or a toxic exposure.

For additional recommendations, consult Compressed Gas Association's Pamphlet P-1.

8. Exposure Controls, Personal Protection

ENGINEERING CONTROLS:
Use a laboratory hood with forced ventilation. Use local exhaust to prevent accumulation above the TWA.

EYE/FACE PROTECTION:
Safety goggles or glasses.

SKIN PROTECTION:
Use butyl rubber, PVC or polyethylene gloves.

RESPIRATORY PROTECTION:
Positive pressure air line with mask or self-contained breathing apparatus should be available for emergency use.

OTHER/GENERAL PROTECTION:
Safety shoes.

9. Physical and Chemical Properties

PARAMETER	VALUE	UNITS
Physical state (gas, liquid, solid)	: Liquid	
Vapor pressure at 100 °F	: 15	Psia
Vapor density (Air = 1)	: Not Available	
Evaporation point	: Not Available	
Boiling point	: 97	°F
	: 36	°C
Freezing point	: Not Available	
	: Not Available	
Ph	: Not Available	
Specific gravity @ 70 °F	: 2.48	1 atm
Oil/water partition coefficient	: Not Available	
Solubility (H20)	: Negligible	
Odor threshold	: Not Available	
Odor and appearance	: Colorless liquid and vapor with mild paraffinic odor.	

10. Stability and Reactivity

STABILITY:
Stable

INCOMPATIBLE MATERIALS:
Oxygen, other oxidizers.

HAZARDOUS DECOMPOSITION PRODUCTS:
None.

HAZARDOUS POLYMERIZATION:
Will not occur.

11. Toxicological Information

No chronic effects data given in the Registry of Toxic Effects of Chemical Substances (RTECS) or Sax, Dangerous Properties of Industrial Materials, 7th ed.

12. Ecological Information

No data given.

13. Disposal Considerations

Do not attempt to dispose of residual waste or unused quantities. Return in the shipping container PROPERLY LABELED, WITH ANY VALVE OUTLET PLUGS OR CAPS SECURED AND VALVE PROTECTION CAP IN PLACE to BOC Gases or authorized distributor for proper disposal.

14. Transport Information

PARAMETER	United States DOT	Canada TDG
PROPER SHIPPING NAME:	Pentanes	N-pentane or Isopentane
HAZARD CLASS:	3	3
IDENTIFICATION NUMBER:	UN 1265	UN 1265
SHIPPING LABEL:	FLAMMABLE LIQUID	FLAMMABLE LIQUID

Packing Group: I

15. Regulatory Information

SARA TITLE III NOTIFICATIONS AND INFORMATION

SARA TITLE III – HAZARD CLASSES:
Acute Health Hazard
Fire Hazard
Sudden Release of Pressure Hazard

16. Other Information

ACGIH	American Conference of Governmental Industrial Hygienists
DOT	Department of Transportation
IARC	International Agency for Research on Cancer
NTP	National Toxicology Program
OSHA	Occupational Safety and Health Administration
PEL	Permissible Exposure Limit
SARA	Superfund Amendments and Reauthorization Act
STEL	Short Term Exposure Limit
TDG	Transportation of Dangerous Goods
TLV	Threshold Limit Value
WHMIS	Workplace Hazardous Materials Information System

Compressed gas cylinders shall not be refilled without the express written permission of the owner. Shipment of a compressed gas cylinder which has not been filled by the owner or with his/her (written) consent is a violation of transportation regulations.

DISCLAIMER OF EXPRESSED AND IMPLIED WARRANTIES:
Although reasonable care has been taken in the preparation of this document, we extend no warranties and make no representations as to the accuracy or completeness of the information contained herein, and assume no responsibility regarding the suitability of this information for the user's intended purposes or for the consequences of its use. Each individual should make a determination as to the suitability of the information for their particular purpose(s).

MSDS *Material Safety Data Sheet*

From: Mallinckrodt Baker, Inc.
222 Red School Lane
Phillipsburg, NJ 08865

Mallinckrodt CHEMICALS J.T.Baker

24 Hour Emergency Telephone: 908-859-2151
CHEMTREC: 1-800-424-9300

National Response in Canada
CANUTEC: 613-996-6666

Outside U.S. and Canada
Chemtrec: 703-527-3887

NOTE: CHEMTREC, CANUTEC and National Response Center emergency numbers to be used only in the event of chemical emergencies involving a spill, leak, fire, exposure or accident involving chemicals.

All non-emergency questions should be directed to Customer Service (1-800-582-2537) for assistance.

HYDROCHLORIC ACID, 33 - 40%

MSDS Number: H3880 --- *Effective Date: 05/10/01*

1. Product Identification

Synonyms: Muriatic acid; hydrogen chloride, aqueous
CAS No.: 7647-01-0
Molecular Weight: 36.46
Chemical Formula: HCl
Product Codes: J.T. Baker: 5367, 5537, 5575, 5800, 5814, 5839, 5894, 5994, 6900, 7831, 9529, 9530, 9534, 9535, 9536, 9537, 9538, 9539, 9540, 9544, 9548
Mallinckrodt: 2062, 2612, 2624, 2626, 5587, H611, H613, H987, H992, H999, V078, V628

2. Composition/Information on Ingredients

Ingredient	CAS No	Percent	Hazardous
Hydrogen Chloride	7647-01-0	33 - 40%	Yes
Water	7732-18-5	60 - 67%	No

3. Hazards Identification

Emergency Overview

POISON! DANGER! CORROSIVE. LIQUID AND MIST CAUSE SEVERE BURNS TO ALL BODY TISSUE. MAY BE FATAL IF SWALLOWED OR INHALED. INHALATION MAY CAUSE LUNG DAMAGE.

J.T. Baker SAF-T-DATA(tm) Ratings (Provided here for your convenience)

Health Rating: 3 - Severe (Poison)
Flammability Rating: 0 - None
Reactivity Rating: 2 - Moderate
Contact Rating: 3 - Severe (Corrosive)
Lab Protective Equip: GOGGLES & SHIELD; LAB COAT & APRON; VENT HOOD; PROPER GLOVES
Storage Color Code: White (Corrosive)

Potential Health Effects

Inhalation:
Corrosive! Inhalation of vapors can cause coughing, choking, inflammation of the nose, throat, and upper respiratory tract, and in severe cases, pulmonary edema, circulatory failure, and death.
Ingestion:
Corrosive! Swallowing hydrochloric acid can cause immediate pain and burns of the mouth, throat, esophagus and gastrointestinal tract. May cause nausea, vomiting, and diarrhea. Swallowing may be fatal.
Skin Contact:
Corrosive! Can cause redness, pain, and severe skin burns. Concentrated solutions cause deep ulcers and discolor skin.
Eye Contact:
Corrosive! Vapors are irritating and may cause damage to the eyes. Contact may cause severe burns and permanent eye damage.
Chronic Exposure:
Long-term exposure to concentrated vapors may cause erosion of teeth. Long term exposures seldom occur due to the corrosive properties of the acid.
Aggravation of Pre-existing Conditions:
Persons with pre-existing skin disorders or eye disease may be more susceptible to the effects of this substance.

---

4. First Aid Measures

Inhalation:
Remove to fresh air. If not breathing, give artificial respiration. If breathing is difficult, give oxygen. Get medical attention immediately.
Ingestion:
DO NOT INDUCE VOMITING! Give large quantities of water or milk if available. Never give anything by mouth to an unconscious person. Get medical attention immediately.
Skin Contact:
In case of contact, immediately flush skin with plenty of water for at least 15 minutes

while removing contaminated clothing and shoes. Wash clothing before reuse. Thoroughly clean shoes before reuse. Get medical attention immediately.

Eye Contact:

Immediately flush eyes with plenty of water for at least 15 minutes, lifting lower and upper eyelids occasionally. Get medical attention immediately.

---

5. Fire Fighting Measures

Fire:

Extreme heat or contact with metals can release flammable hydrogen gas.

Explosion:

Not considered to be an explosion hazard.

Fire Extinguishing Media:

If involved in a fire, use water spray. Neutralize with soda ash or slaked lime.

Special Information:

In the event of a fire, wear full protective clothing and NIOSH-approved self-contained breathing apparatus with full facepiece operated in the pressure demand or other positive pressure mode. Structural firefighter's protective clothing is ineffective for fires involving hydrochloric acid. Stay away from ends of tanks. Cool tanks with water spray until well after fire is out.

---

6. Accidental Release Measures

Ventilate area of leak or spill. Wear appropriate personal protective equipment as specified in Section 8. Isolate hazard area. Keep unnecessary and unprotected personnel from entering. Contain and recover liquid when possible. Neutralize with alkaline material (soda ash, lime), then absorb with an inert material (e. g., vermiculite, dry sand, earth), and place in a chemical waste container. Do not use combustible materials, such as saw dust. Do not flush to sewer! US Regulations (CERCLA) require reporting spills and releases to soil, water and air in excess of reportable quantities. The toll free number for the US Coast Guard National Response Center is (800) 424-8802.

J. T. Baker NEUTRASORB® or TEAM® 'Low Na+' acid neutralizers are recommended for spills of this product.

---

7. Handling and Storage

Store in a cool, dry, ventilated storage area with acid resistant floors and good drainage. Protect from physical damage. Keep out of direct sunlight and away from heat, water, and incompatible materials. Do not wash out container and use it for other purposes. When diluting, the acid should always be added slowly to water and in small amounts. Never use hot water and never add water to the acid. Water added to acid can cause uncontrolled boiling and splashing. When opening metal containers, use non-sparking tools because of the possibility of hydrogen gas being present. Containers of this material

may be hazardous when empty since they retain product residues (vapors, liquid); observe all warnings and precautions listed for the product.

8. Exposure Controls/Personal Protection

Airborne Exposure Limits:
-OSHA Permissible Exposure Limit (PEL):
5 ppm Ceiling
-ACGIH Threshold Limit Value (TLV):
5 ppm Ceiling

Ventilation System:
A system of local and/or general exhaust is recommended to keep employee exposures below the Airborne Exposure Limits. Local exhaust ventilation is generally preferred because it can control the emissions of the contaminant at its source, preventing dispersion of it into the general work area. Please refer to the ACGIH document, *Industrial Ventilation, A Manual of Recommended Practices*, most recent edition, for details.
Personal Respirators (NIOSH Approved):
If the exposure limit is exceeded, a full facepiece respirator with an acid gas cartridge may be worn up to 50 times the exposure limit or the maximum use concentration specified by the appropriate regulatory agency or respirator supplier, whichever is lowest. For emergencies or instances where the exposure levels are not known, use a full-facepiece positive-pressure, air-supplied respirator. WARNING: Air purifying respirators do not protect workers in oxygen-deficient atmospheres.
Skin Protection:
Rubber or neoprene gloves and additional protection including impervious boots, apron, or coveralls, as needed in areas of unusual exposure to prevent skin contact.
Eye Protection:
Use chemical safety goggles and/or a full face shield where splashing is possible. Maintain eye wash fountain and quick-drench facilities in work area.

9. Physical and Chemical Properties

Appearance:
Colorless, fuming liquid.
Odor:
Pungent odor of hydrogen chloride.
Solubility:
Infinite in water with slight evolution of heat.
Density:
1.18
pH:
For HCL solutions: 0.1 (1.0 N), 1.1 (0.1 N), 2.02 (0.01 N)
% Volatiles by volume @ 21C (70F):
100

Boiling Point:
53C (127F) Azeotrope (20.2%) boils at 109C (228F)
Melting Point:
-74C (-101F)
Vapor Density (Air=1):
No information found.
Vapor Pressure (mm Hg):
190 @ 25C (77F)
Evaporation Rate (BuAc=1):
No information found.

10. Stability and Reactivity

Stability:
Stable under ordinary conditions of use and storage. Containers may burst when heated.
Hazardous Decomposition Products:
When heated to decomposition, emits toxic hydrogen chloride fumes and will react with water or steam to produce heat and toxic and corrosive fumes. Thermal oxidative decomposition produces toxic chlorine fumes and explosive hydrogen gas.
Hazardous Polymerization:
Will not occur.
Incompatibilities:
A strong mineral acid, concentrated hydrochloric acid is incompatible with many substances and highly reactive with strong bases, metals, metal oxides, hydroxides, amines, carbonates and other alkaline materials. Incompatible with materials such as cyanides, sulfides, sulfites, and formaldehyde.
Conditions to Avoid:
Heat, direct sunlight.

11. Toxicological Information

Inhalation rat LC50: 3124 ppm/1H; oral rabbit LD50: 900 mg/kg (Hydrochloric acid concentrated); investigated as a tumorigen, mutagen, reproductive effector.

--------\Cancer Lists\----------

Ingredient	---NTP Carcinogen--- Known	Anticipated	IARC Category
Hydrogen Chloride (7647-01-0)	No	No	3
Water (7732-18-5)	No	No	None

12. Ecological Information

Environmental Fate:

When released into the soil, this material is not expected to biodegrade. When released into the soil, this material may leach into groundwater.

Environmental Toxicity:

This material is expected to be toxic to aquatic life.

13. Disposal Considerations

Whatever cannot be saved for recovery or recycling should be handled as hazardous waste and sent to a RCRA approved waste facility. Processing, use or contamination of this product may change the waste management options. State and local disposal regulations may differ from federal disposal regulations. Dispose of container and unused contents in accordance with federal, state and local requirements.

14. Transport Information

Domestic (Land, D.O.T.)

Proper Shipping Name: HYDROCHLORIC ACID
Hazard Class: 8
UN/NA: UN1789
Packing Group: II
Information reported for product/size: 475LB

International (Water, I.M.O.)

Proper Shipping Name: HYDROCHLORIC ACID
Hazard Class: 8
UN/NA: UN1789
Packing Group: II
Information reported for product/size: 475LB

15. Regulatory Information

--------\Chemical Inventory Status - Part 1\--------

Ingredient	TSCA	EC	Japan	Australia
Hydrogen Chloride (7647-01-0)	Yes	Yes	Yes	Yes
Water (7732-18-5)	Yes	Yes	Yes	Yes

--------\Chemical Inventory Status - Part 2\--------

Ingredient	Korea	--Canada-- DSL	NDSL	Phil.
Hydrogen Chloride (7647-01-0)	Yes	Yes	No	Yes
Water (7732-18-5)	Yes	Yes	No	Yes

--------\Federal, State & International Regulations - Part 1\--------

Ingredient	-SARA 302- RQ	TPQ	------SARA 313------ List	Chemical Catg.
Hydrogen Chloride (7647-01-0)	5000	500*	Yes	No
Water (7732-18-5)	No	No	No	No

--------\Federal, State & International Regulations - Part 2\----------

Ingredient	CERCLA	-RCRA- 261.33	-TSCA- 8(d)
Hydrogen Chloride (7647-01-0)	5000	No	No
Water (7732-18-5)	No	No	No

Chemical Weapons Convention: No TSCA 12(b): No CDTA: Yes
SARA 311/312: Acute: Yes Chronic: Yes Fire: No Pressure: No
Reactivity: No (Mixture / Liquid)

Australian Hazchem Code: 2R
Poison Schedule: None allocated.
WHMIS:
This MSDS has been prepared according to the hazard criteria of the Controlled Products Regulations (CPR) and the MSDS contains all of the information required by the CPR.

16. Other Information

NFPA Ratings: Health: **3** Flammability: **0** Reactivity: **0**
Label Hazard Warning:
POISON! DANGER! CORROSIVE. LIQUID AND MIST CAUSE SEVERE BURNS TO ALL BODY TISSUE. MAY BE FATAL IF SWALLOWED OR INHALED. INHALATION MAY CAUSE LUNG DAMAGE.
Label Precautions:
Do not get in eyes, on skin, or on clothing.
Do not breathe vapor or mist.
Use only with adequate ventilation.
Wash thoroughly after handling.
Store in a tightly closed container.
Remove and wash contaminated clothing promptly.
Label First Aid:
In case of contact, immediately flush eyes or skin with plenty of water for at least 15 minutes while removing contaminated clothing and shoes. Wash clothing before reuse. If swallowed, DO NOT INDUCE VOMITING. Give large quantities of water. Never give anything by mouth to an unconscious person. If inhaled, remove to fresh air. If not breathing, give artificial respiration. If breathing is difficult, give oxygen. In all cases get medical attention immediately.
Product Use:
Laboratory Reagent.
Revision Information:
MSDS Section(s) changed since last revision of document include: 16.

Disclaimer:
****

Mallinckrodt Baker, Inc. provides the information contained herein in good faith but makes no representation as to its comprehensiveness or accuracy. This document is intended only as a guide to the appropriate precautionary handling of the material by a properly trained person using this product. Individuals receiving the information must exercise their independent judgment in determining its appropriateness for a particular purpose. MALLINCKRODT BAKER, INC. MAKES NO REPRESENTATIONS OR WARRANTIES, EITHER EXPRESS OR IMPLIED, INCLUDING WITHOUT LIMITATION ANY WARRANTIES OF MERCHANTABILITY, FITNESS FOR A PARTICULAR PURPOSE WITH RESPECT TO THE INFORMATION SET FORTH HEREIN OR THE PRODUCT TO WHICH THE INFORMATION REFERS. ACCORDINGLY, MALLINCKRODT BAKER, INC. WILL NOT BE RESPONSIBLE FOR DAMAGES RESULTING FROM USE OF OR RELIANCE UPON THIS INFORMATION.
****

Prepared by: Environmental Health & Safety
Phone Number: (314) 654-1600 (U.S.A.)

MSDS Material Safety Data Sheet

From: Mallinckrodt Baker, Inc.
222 Red School Lane
Phillipsburg, NJ 08865

Mallinckrodt CHEMICALS

J.T.Baker

24 Hour Emergency Telephone: 908-859-2151
CHEMTREC: 1-800-424-9300

National Response in Canada
CANUTEC: 613-996-6666

Outside U.S. and Canada
Chemtrec: 703-527-3887

NOTE: CHEMTREC, CANUTEC and National Response Center emergency numbers to be used only in the event of chemical emergencies involving a spill, leak, fire, exposure or accident involving chemicals.

All non-emergency questions should be directed to Customer Service (1-800-582-2537) for assistance.

NITRIC ACID FUMING

MSDS Number: N3662 --- *Effective Date: 11/17/99*

1. Product Identification

Synonyms: Aqua Fortis; Azotic Acid; Nitric Acid 90%; Red fuming nitric acid
CAS No.: 7697-37-2
Molecular Weight: 63
Chemical Formula: HNO3
Product Codes:
J.T. Baker: 9624
Mallinckrodt: 2713

2. Composition/Information on Ingredients

Ingredient	CAS No	Percent	Hazardous
Nitric Acid	7697-37-2	90 - 100%	Yes

3. Hazards Identification

Emergency Overview

POISON! DANGER! STRONG OXIDIZER. CONTACT WITH OTHER MATERIAL MAY CAUSE FIRE. CORROSIVE. LIQUID AND MIST CAUSE SEVERE BURNS TO ALL BODY TISSUE. MAY BE FATAL IF SWALLOWED OR INHALED. INHALATION MAY CAUSE LUNG AND TOOTH DAMAGE.

J.T. Baker SAF-T-DATA(tm) Ratings (Provided here for your convenience)

Health Rating: 4 - Extreme (Poison)
Flammability Rating: 0 - None
Reactivity Rating: 3 - Severe (Oxidizer)
Contact Rating: 4 - Extreme (Corrosive)
Lab Protective Equip: GOGGLES & SHIELD; LAB COAT & APRON; VENT HOOD; PROPER GLOVES
Storage Color Code: Yellow (Reactive)

Potential Health Effects

Nitric acid is extremely hazardous; it is corrosive, reactive, an oxidizer, and a poison.

Inhalation:
Corrosive! Inhalation of vapors can cause breathing difficulties and lead to pneumonia and pulmonary edema, which may be fatal. Other symptoms may include coughing, choking, and irritation of the nose, throat, and respiratory tract. Symptoms may disappear only to return in a few hours and more severely. Onset of symptoms may be delayed for 4-30 hours.
Ingestion:
Corrosive! Swallowing nitric acid can cause immediate pain and burns of the mouth, throat, esophagus and gastrointestinal tract.
Skin Contact:
Corrosive! Can cause redness, pain, and severe skin burns. Concentrated solutions cause deep ulcers and stain skin a yellow or yellow-brown color.
Eye Contact:
Corrosive! Vapors are irritating and may cause severe damage to the eyes. Splashes may cause severe burns and permanent eye damage.
Chronic Exposure:
Long-term exposure to concentrated vapors may cause erosion of teeth and lung damage. Long-term exposures seldom occur due to the corrosive properties of the acid.
Aggravation of Pre-existing Conditions:
Persons with pre-existing skin disorders, eye disease, or cardiopulmonary diseases may be more susceptible to the effects of this substance.

---

4. First Aid Measures

Immediate first aid treatment reduces the health effects of this substance.
Inhalation:
Remove to fresh air. If not breathing, give artificial respiration. If breathing is difficult, give oxygen. Call a physician.
Ingestion:
DO NOT INDUCE VOMITING! Give large quantities of water or milk if available.

Never give anything by mouth to an unconscious person. Get medical attention immediately.

Skin Contact:

In case of contact, immediately flush skin with plenty of water for at least 15 minutes while removing contaminated clothing and shoes. Wash clothing before reuse. Thoroughly clean shoes before reuse. Get medical attention immediately.

Eye Contact:

Immediately flush eyes with plenty of water for at least 15 minutes, lifting lower and upper eyelids occasionally. Get medical attention immediately.

---

5. Fire Fighting Measures

Fire:

Not combustible, but substance is a strong oxidizer and its heat of reaction with reducing agents or combustibles may cause ignition. Can react with metals to release flammable hydrogen gas.

Explosion:

Reacts explosively with combustible organic or readily oxidizable materials such as: alcohols, turpentine, charcoal, organic refuse, metal powder, hydrogen sulfide, etc. Reacts with most metals to release hydrogen gas which can form explosive mixtures with air.

Fire Extinguishing Media:

Water spray may be used to keep fire exposed containers cool. Do not get water inside container.

Special Information:

Increases the flammability of combustible, organic and readily oxidizable materials. In the event of a fire, wear full protective clothing and NIOSH-approved self-contained breathing apparatus with full facepiece operated in the pressure demand or other positive pressure mode.

---

6. Accidental Release Measures

Ventilate area of leak or spill. Wear appropriate personal protective equipment as specified in Section 8. Isolate hazard area. Keep unnecessary and unprotected personnel from entering. Contain and recover liquid when possible. Neutralize with alkaline material (soda ash, lime), then absorb with an inert material (e. g., vermiculite, dry sand, earth), and place in a chemical waste container. Do not use combustible materials, such as saw dust. Do not flush to sewer! US Regulations (CERCLA) require reporting spills and releases to soil, water and air in excess of reportable quantities. The toll free number for the US Coast Guard National Response Center is (800) 424-8802.

---

7. Handling and Storage

Store in a cool, dry, ventilated storage area with acid resistant floors and good drainage.

Protect from physical damage. Keep out of direct sunlight and away from heat, water, and incompatible materials. Do not wash out container and use it for other purposes. When diluting, the acid should always be added slowly to water and in small amounts. Never use hot water and never add water to the acid. Water added to acid can cause uncontrolled boiling and splashing. Containers of this material may be hazardous when empty since they retain product residues (vapors, liquid); observe all warnings and precautions listed for the product.

---

8. Exposure Controls/Personal Protection

Airborne Exposure Limits:
-OSHA Permissible Exposure Limit (PEL):
2 ppm (TWA), 4 ppm (STEL)
-ACGIH Threshold Limit Value (TLV):
2 ppm (TWA); 4 ppm (STEL)

Ventilation System:
A system of local and/or general exhaust is recommended to keep employee exposures below the Airborne Exposure Limits. Local exhaust ventilation is generally preferred because it can control the emissions of the contaminant at its source, preventing dispersion of it into the general work area. Please refer to the ACGIH document, *Industrial Ventilation, A Manual of Recommended Practices*, most recent edition, for details.
Personal Respirators (NIOSH Approved):
If the exposure limit is exceeded, wear a supplied air, full-facepiece respirator, airlined hood, or full-facepiece self-contained breathing apparatus. Nitric acid is an oxidizer and should not come in contact with cartridges and canisters that contain oxidizable materials, such as activated charcoal. Canister-type respirators using sorbents are ineffective.
Skin Protection:
Wear impervious protective clothing, including boots, gloves, lab coat, apron or coveralls, as appropriate, to prevent skin contact.
Eye Protection:
Use chemical safety goggles and/or a full face shield where splashing is possible. Maintain eye wash fountain and quick-drench facilities in work area.

---

9. Physical and Chemical Properties

Appearance:
Yellow to brownish-red fuming liquid.
Odor:
Suffocating, acrid.
Solubility:
Infinitely soluble.
Density:
1.5

pH:
No information found.
% Volatiles by volume @ 21C (70F):
100 (as water and acid)
Boiling Point:
85C (185F)
Melting Point:
ca. -50C (ca. -58F)
Vapor Density (Air=1):
2-3
Vapor Pressure (mm Hg):
48 @ 20C (68F)
Evaporation Rate (BuAc=1):
No information found.

10. Stability and Reactivity

Stability:
Stable under ordinary conditions of use and storage. Containers may burst when heated.
Hazardous Decomposition Products:
When heated to decomposition, emits toxic nitrogen oxides fumes and hydrogen nitrate. Will react with water or steam to produce heat and toxic and corrosive fumes.
Hazardous Polymerization:
Will not occur.
Incompatibilities:
A dangerously powerful oxidizing agent, fuming nitric acid is incompatible with most substances, especially strong bases, metallic powders, carbides, hydrogen sulfide, turpentine, and combustible organics.
Conditions to Avoid:
Heat, light, moisture.

11. Toxicological Information

For Nitric Acid: Oral (human) LDLo: 430 mg/kg; Inhalation,rat, LC50: 67 ppm (NO2)/4H.; Investigated as a mutagen and reproductive effector.

--------\Cancer Lists\----------

Ingredient	---NTP Carcinogen--- Known	Anticipated	IARC Category
Nitric Acid (7697-37-2)	No	No	None

12. Ecological Information

Environmental Fate:
No information found.
Environmental Toxicity:
No information found.

13. Disposal Considerations

Whatever cannot be saved for recovery or recycling should be managed in an appropriate and approved waste facility. Although not a listed RCRA hazardous waste, this material may exhibit one or more characteristics of a hazardous waste and require appropriate analysis to determine specific disposal requirements. Processing, use or contamination of this product may change the waste management options. State and local disposal regulations may differ from federal disposal regulations. Dispose of container and unused contents in accordance with federal, state and local requirements.

14. Transport Information

Domestic (Land, D.O.T.)

Proper Shipping Name: NITRIC ACID, RED FUMING
Hazard Class: 8, 5.1, 6.1
UN/NA: UN2032
Packing Group: I
Information reported for product/size: 2.5L

International (Water, I.M.O.)

Proper Shipping Name: NITRIC ACID, RED FUMING
Hazard Class: 8, 5.1, 6.1
UN/NA: UN2032
Packing Group: I
Information reported for product/size: 2.5L

15. Regulatory Information

--------\Chemical Inventory Status - Part 1\--------

Ingredient	TSCA	EC	Japan	Australia
Nitric Acid (7697-37-2)	Yes	Yes	Yes	Yes

--------\Chemical Inventory Status - Part 2\--------

Ingredient	Korea	--Canada-- DSL	NDSL	Phil.
Nitric Acid (7697-37-2)	Yes	Yes	No	Yes

--------\Federal, State & International Regulations - Part 1\----------

Ingredient	-SARA 302- RQ	TPQ	------SARA 313------ List	Chemical Catg.
Nitric Acid (7697-37-2)	1000	1000	Yes	No

--------\Federal, State & International Regulations - Part 2\----------

Ingredient	CERCLA	-RCRA- 261.33	-TSCA- 8(d)
Nitric Acid (7697-37-2)	1000	No	No

Chemical Weapons Convention: No TSCA 12(b): No CDTA: No
SARA 311/312: Acute: Yes Chronic: Yes Fire: Yes Pressure: No
Reactivity: Yes (Pure / Liquid)

Australian Hazchem Code: 2PE
Poison Schedule: S6
WHMIS:
This MSDS has been prepared according to the hazard criteria of the Controlled Products Regulations (CPR) and the MSDS contains all of the information required by the CPR.

---

16. Other Information

NFPA Ratings: Health: 4 Flammability: 0 Reactivity: 1 Other: Oxidizer
Label Hazard Warning:
POISON! DANGER! STRONG OXIDIZER. CONTACT WITH OTHER MATERIAL MAY CAUSE FIRE. CORROSIVE. LIQUID AND MIST CAUSE SEVERE BURNS TO ALL BODY TISSUE. MAY BE FATAL IF SWALLOWED OR INHALED. INHALATION MAY CAUSE LUNG AND TOOTH DAMAGE.
Label Precautions:
Do not get in eyes, on skin, or on clothing.
Do not breathe vapor or mist.
Use only with adequate ventilation.
Wash thoroughly after handling.
Keep from contact with clothing and other combustible materials.
Do not store near combustible materials.
Store in a tightly closed container.
Remove and wash contaminated clothing promptly.
Label First Aid:
In case of contact, immediately flush eyes or skin with plenty of water for at least 15 minutes while removing contaminated clothing and shoes. Wash clothing before reuse. If swallowed, DO NOT INDUCE VOMITING. Give large quantities of water. Never give anything by mouth to an unconscious person. If inhaled, remove to fresh air. If not breathing, give artificial respiration. If breathing is difficult, give oxygen. In all cases call a physician.
Product Use:

Laboratory Reagent.
Revision Information:
New 16 section MSDS format, all sections have been revised.
Disclaimer:
****

Mallinckrodt Baker, Inc. provides the information contained herein in good faith but makes no representation as to its comprehensiveness or accuracy. This document is intended only as a guide to the appropriate precautionary handling of the material by a properly trained person using this product. Individuals receiving the information must exercise their independent judgment in determining its appropriateness for a particular purpose. MALLINCKRODT BAKER, INC. MAKES NO REPRESENTATIONS OR WARRANTIES, EITHER EXPRESS OR IMPLIED, INCLUDING WITHOUT LIMITATION ANY WARRANTIES OF MERCHANTABILITY, FITNESS FOR A PARTICULAR PURPOSE WITH RESPECT TO THE INFORMATION SET FORTH HEREIN OR THE PRODUCT TO WHICH THE INFORMATION REFERS. ACCORDINGLY, MALLINCKRODT BAKER, INC. WILL NOT BE RESPONSIBLE FOR DAMAGES RESULTING FROM USE OF OR RELIANCE UPON THIS INFORMATION.
****

Prepared by: Environmental Health & Safety
Phone Number: (314) 654-1600 (U.S.A.)

COLORADO REFINING -- GASOLINE - GASOLINE, UNLEADEDCOLORADO REFINING -- GASOLINE - GASOLINE,
UNLEADED
MATERIAL SAFETY DATA SHEET
NSN: 9130012084172
Manufacturer's CAGE: COLOR
Part No. Indicator: A
Part Number/Trade Name: GASOLINE

==========

General Information

==========

Item Name: GASOLINE, UNLEADED
Company's Name: COLORADO REFINING COMPANY
Company's Street: 5800 BRIGHTON BLVD
Company's City: COMMERCE CITY
Company's State: CO
Company's Country: US
Company's Zip Code: 80022
Company's Emerg Ph #: 517-463-1164, CHEMTREC 800-424-9300
Company's Info Ph #: 303-295-4500
Record No. For Safety Entry: 001
Tot Safety Entries This Stk#: 064
Status: SE
Date MSDS Prepared: 29JAN91
Safety Data Review Date: 30APR93
Supply Item Manager: KY
MSDS Preparer's Name: M.N. MARTIN
MSDS Serial Number: BQNHW
Specification Number: VV-G-1690
Spec Type, Grade, Class: CIVGAS
Hazard Characteristic Code: F2
Unit Of Issue: DR
Unit Of Issue Container Qty: 55 GALLONS
Type Of Container: DRUM
Net Unit Weight: 320.6 LBS

==========

Ingredients/Identity Information

==========

==========

Physical/Chemical Characteristics

==========

Appearance And Odor: SILVER, GREY OR CLEAR LIQUID WITH CHARACTERISTIC GASOLINE ODOR
Boiling Point: <100F,<38C
Vapor Pressure (MM Hg/70 F): 400-900MM

Vapor Density (Air=1): 3-4
Specific Gravity: 0.65-0.75
Decomposition Temperature: UNKNOWN
Evaporation Rate And Ref: <1 (ETHER=1)
Solubility In Water: INSOLUBLE
Percent Volatiles By Volume: 100
Corrosion Rate (IPY): UNKNOWN

==========

Fire and Explosion Hazard Data

==========

Flash Point: <-40F,<-40C
Lower Explosive Limit: 1.3%
Upper Explosive Limit: 6.0%
Extinguishing Media: USE CARBON DIOXIDE, FOAM, OR DRY CHEMICAL. USE WA
TER
FOG TO COOL SRROUNDING CONTAINERS.
Special Fire Fighting Proc: WEAR FIRE FIGHTING PROTECTIVE EQUIPMENT AN
D A
FULL FACED SELF CONTAINED BREATHING APPARATUS. EVACUATE AREA. COOL FIR
E
EXPOSED CONTAINERS WITH WATER SPRAY.
Unusual Fire And Expl Hazrds: CONTAINERS WILL EXPLODE IN FIRE. VAPORS
HEAVIER THAN AIR AND MAY TRAVEL A CONSIDERABLE DISTANCE TO SOURCE OF
IGNITION AND FLASH BACK.

==========

Reactivity Data

==========

Stability: YES
Cond To Avoid (Stability): HIGH HEAT, OPEN FLAMES AND OTHER SOURCES OF
IGNITION
Materials To Avoid: STRONG OXIDIZING AGENTS
Hazardous Decomp Products: CARBON MONOXIDE, CARBON DIOXIDE AND OTHER
HYDROCARBON COMPOUNDS DURING COMBUSTION.
Hazardous Poly Occur: NO
Conditions To Avoid (Poly): NOT APPLICABLE

==========

Health Hazard Data

==========

LD50-LC50 Mixture: ORAL LD50 (RAT) IS UNKNOWN
Route Of Entry - Inhalation: YES
Route Of Entry - Skin: YES
Route Of Entry - Ingestion: YES
Health Haz Acute And Chronic: ACUTE-INHALATION:IRRITATION OF UPPER
DERMATITIS, PNEUMOTITIS, POLYNEUROPATHY, PULMONARY EDEMA, AND KIDNEY
DAMAGE.

Carcinogenicity - NTP: YES
Carcinogenicity - IARC: YES
Carcinogenicity - OSHA: YES
Explanation Carcinogenicity: CONTAINS Benzene [71-43-2] WHICH IS LISTE
D BY
NTP AND IARC AND REGULATED BY OSHA AS A CARCINOGEN.
Signs/Symptoms Of Overexp: COUGHING, DIFFICULTY IN BREATHING, NAUSEA,
VOMTING, FATIGUE, DIZZINESS, HEADACHES, UNCONSCIOUSNESS, AND EYE
IRRITATION, DRY SKIN.
Med Cond Aggravated By Exp: PERSONS WITH A SKIN AND PULMONARY DISORDER
S
SHOULD USE CAUTION WHEN HANDLING OR USING THIS PRODUCT.
Emergency/First Aid Proc: SKIN: REMOVE CONTAMINATED CLOTHING. WASH WIT
H
SOAP AND WATER. GET MEDICAL ATTENTION IF IRRITATION PERSISTS.
INHALATION:REMOVE TO FRESH AIR & RESTORE BREATHING IF NECESSARY. GET
MEDICAL ATTENTION. EYE:IMMEDIATELY FLUSH WITH WATER FOR 15 MINUTES WHI
LE
HOLDING EYELIDS OPEN. GET MEDICAL ATTENTION. INGESTION: GET IMMEDIATE
MEDICAL ATTENTION. DO NOT INDUCE VOMITING. NOTHING BY MOUTH IF UNCONSC
IOUS.
==========
=====

Precautions for Safe Handling and Use

==========
=====
Steps If Matl Released/Spill: REMOVE SOURCES OF IGNITION & WEAR PROTEC
TIVE
EQUIPMENT. MINOR: ABSORB MATERIAL WITH CLAY, VERMICULITE, OR SIMILAR
ABSORBENT MATERIAL. PLACE IN DISPOSAL CONTAINERS. MAJOR: DIKE & CONTAI
N
SPILL. SHUT OFF LEAKS. REMOVE LIQUID BY VACUUM OR ABSORBENT.
Neutralizing Agent: NOT APPLICABLE
Waste Disposal Method: WASTE MAY BE BURNED IN AN APPROVED INCINERATOR
OR
DISPOSED OF IN ACCORDANCE WITH ALL APPLICABLE LOCAL, STATE AND FEDERAL
LAWS
AND REGULATIONS.
Precautions-Handling/Storing: STORE IN A COOL, VENTILATED WORK AREA. K
EEP
CONTAINERS CLOSED WHEN NOT IN USE. FLAMMABLE LIQUID; EMPTY CONTAINERS
CAN
BE HAZARDOUS.
Other Precautions: THE SELECTION OF PERSONAL PROTECTIVE EQUIPMENT SHOU
LD
BE MADE BY THE MATERIAL USER BASED ON THE PARTICULAR CONDITIONS WHERE
THE
MATERIAL IS TO BE USED TOGETHER WITH INFORMATION CONTAINED IN THIS MSD
S.
==========
=====

Control Measures

==========
=====

Respiratory Protection: USE NIOSH APPROVED RESPIRATOR. AIR-SUPPLIED OR FILTERING TYPE WITH ORGANIC VAPOR CARTRIDGES ARE RECOMMENDED.
Ventilation: LOCAL AND MECHANICAL EXHAUST RECOMMENDED. AVOID OPEN ELECTRICAL SOURCES NEAR PRODUCT VAPOR AREAS.
Protective Gloves: NEOPRENE, NITRILE, OR POLYVINYL ALCOHOL
Eye Protection: USE CHEMICAL SAFETY GOGGLES & FACESHIELD
Other Protective Equipment: EYE WASH STATION & SAFETY SHOWER.
Work Hygienic Practices: DO NOT TAKE INTERNALLY. AVOID SKIN CONTACT. W ASH
SKIN AFTER USING PRODUCT. DO NOT EAT, DRINK OR SMOKE IN WORK AREA.
Suppl. Safety & Health Data: NONE

==========
=====

Transportation Data

==========
=====

Trans Data Review Date: 93168
DOT PSN Code: GTN
DOT Proper Shipping Name: GASOLINE
DOT Class: 3
DOT ID Number: UN1203
DOT Pack Group: II
DOT Label: FLAMMABLE LIQUID
IMO PSN Code: HRV
IMO Proper Shipping Name: GASOLINE
IMO Regulations Page Number: 3141
IMO UN Number: 1203
IMO UN Class: 3.1
IMO Subsidiary Risk Label: -
IATA PSN Code: MUC
IATA UN ID Number: 1203
IATA Proper Shipping Name: GASOLINE
IATA UN Class: 3
IATA Label: FLAMMABLE LIQUID
AFI PSN Code: MUC
AFI Prop. Shipping Name: GASOLINE
AFI Class: 3
AFI ID Number: UN1203
AFI Pack Group: II
AFI Basic Pac Ref: 7-7

==========
=====

Disposal Data

==========
=====

==========
=====

Label Data

==========
=====
Label Required: YES
Label Status: G
Common Name: GASOLINE
Special Hazard Precautions: ACUTE-INHALATION:IRRITATION OF UPPER DERMATITIS, PNEUMOTITIS, POLYNEUROPATHY, PULMONARY EDEMA, AND KIDNEY DAMAGE. COUGHING, DIFFICULTY IN BREATHING, NAUSEA, VOMTING, FATIGUE, DIZZINESS, HEADACHES, UNCONSCIOUSNESS, AND EYE IRRITATION, DRY SKIN.
Label Name: COLORADO REFINING COMPANY
Label Street: 5800 BRIGHTON BLVD
Label City: COMMERCE CITY
Label State: CO
Label Zip Code: 80022
Label Country: US
Label Emergency Number: 517-463-1164, CHEMTREC 800-424-9300

are not known, use a full-facepiece positive-pressure, air-supplied respirator.
WARNING: Air-purifying respirators do not protect workers in oxygen-deficient atmospheres.
Skin Protection:
Wear protective gloves and clean body-covering clothing.
Eye Protection:
Use chemical safety goggles. Maintain eye wash fountain and quick-drench facilities in work area.

---

9. Physical and Chemical Properties

Appearance:
White powder interspersed with cream colored flakes.
Odor:
No information found.
Solubility:
Moderate (1-10%)
Specific Gravity:
No information found.
pH:
No information found.
% Volatiles by volume @ 21C (70F):
0
Boiling Point:
No information found.
Melting Point:
No information found.
Vapor Density (Air=1):
No information found.
Vapor Pressure (mm Hg):
No information found.
Evaporation Rate (BuAc=1):
No information found.

---

10. Stability and Reactivity

Stability:
Stable under ordinary conditions of use and storage.
Hazardous Decomposition Products:
Carbon dioxide and carbon monoxide may form when heated to decomposition.
Hazardous Polymerization:
Will not occur.
Incompatibilities:
No information found.
Conditions to Avoid:

No information found.

11. Toxicological Information

No LD50/LC50 information found relating to normal routes of occupational exposure.

--------\Cancer Lists\----------

Ingredient	---NTP Carcinogen--- Known	Anticipated	IARC Category
Alconox(R) proprietary detergent mixture	No	No	None

12. Ecological Information

Environmental Fate:
This product is biodegradable.
Environmental Toxicity:
No information found.

13. Disposal Considerations

Whatever cannot be saved for recovery or recycling should be managed in an appropriate and approved waste disposal facility. Processing, use or contamination of this product may change the waste management options. State and local disposal regulations may differ from federal disposal regulations. Dispose of container and unused contents in accordance with federal, state and local requirements.

14. Transport Information

Not regulated.

15. Regulatory Information

--------\Chemical Inventory Status - Part 1\----------

Ingredient	TSCA	EC	Japan	Australia
Alconox(R) proprietary detergent mixture	Yes	No	No	No

--------\Chemical Inventory Status - Part 2\----------

Ingredient	Korea	--Canada-- DSL	NDSL	Phil.

Alconox(R) proprietary detergent mixture	No	No	Yes	No

--------\Federal, State & International Regulations - Part 1\----------

Ingredient	-SARA 302- RQ	TPQ	------SARA 313------ List	Chemical Catg.
Alconox(R) proprietary detergent mixture	No	No	No	No

--------\Federal, State & International Regulations - Part 2\----------

Ingredient	CERCLA	-RCRA- 261.33	-TSCA- 8(d)
Alconox(R) proprietary detergent mixture	No	No	No

Chemical Weapons Convention: No TSCA 12(b): No CDTA: No
SARA 311/312: Acute: Yes Chronic: No Fire: No Pressure: No
Reactivity: No (Pure / Solid)

Australian Hazchem Code: No information found.
Poison Schedule: No information found.
WHMIS:
This MSDS has been prepared according to the hazard criteria of the Controlled Products Regulations (CPR) and the MSDS contains all of the information required by the CPR.

16. Other Information

NFPA Ratings: Health: **0** Flammability: **0** Reactivity: **0**
Label Hazard Warning:
CAUTION! MAY BE HARMFUL IF SWALLOWED OR INHALED. MAY CAUSE IRRITATION TO EYES AND RESPIRATORY TRACT.
Label Precautions:
Avoid contact with eyes.
Keep container closed.
Use with adequate ventilation.
Avoid breathing dust.
Wash thoroughly after handling.
Label First Aid:
If swallowed, DO NOT INDUCE VOMITING. Give large quantities of water. Never give anything by mouth to an unconscious person. If inhaled, remove to fresh air. If not breathing, give artificial respiration. If breathing is difficult, give oxygen. In case of eye contact, immediately flush eyes with plenty of water for at least 15 minutes. In all cases, get medical attention.
Product Use:
Laboratory Reagent.
Revision Information:

MSDS Section(s) changed since last revision of document include: 1, 2, 3, 4, 5, 6, 7, 8, 9, 10, 11, 12, 15, 16.

Disclaimer:

****

Mallinckrodt Baker, Inc. provides the information contained herein in good faith but makes no representation as to its comprehensiveness or accuracy. This document is intended only as a guide to the appropriate precautionary handling of the material by a properly trained person using this product. Individuals receiving the information must exercise their independent judgment in determining its appropriateness for a particular purpose. MALLINCKRODT BAKER, INC. MAKES NO REPRESENTATIONS OR WARRANTIES, EITHER EXPRESS OR IMPLIED, INCLUDING WITHOUT LIMITATION ANY WARRANTIES OF MERCHANTABILITY, FITNESS FOR A PARTICULAR PURPOSE WITH RESPECT TO THE INFORMATION SET FORTH HEREIN OR THE PRODUCT TO WHICH THE INFORMATION REFERS. ACCORDINGLY, MALLINCKRODT BAKER, INC. WILL NOT BE RESPONSIBLE FOR DAMAGES RESULTING FROM USE OF OR RELIANCE UPON THIS INFORMATION.

****

Prepared by: Strategic Services Division
Phone Number: (314) 539-1600 (U.S.A.)

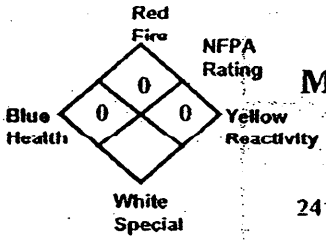

Liqui-Nox ®

MATERIAL SAFETY DATA SHEET

Alconox, Inc.
30 Glenn Street. Suite 309
White Plains, NY 10603
24 Hour Emergency Number – Chem-Tel (800) 255-3924

I. IDENTIFICATION

Product Name (as appears on label)	LIQUI-NOX
CAS Registry Number:	Not Applicable
Effective Date:	January 1, 1999
Chemical Family:	Anionic Liquid Detergent
Manufacturer Catalog Numbers for sizes	1232, 1201, 1215 and 1255

II. HAZARDOUS INGREDIENTS/IDENTITY INFORMATION

There are no hazardous ingredients in LIQUI-NOX™ as defined by the OSHA Standard and Hazardous Substance List 29 CFR 1910 Subpart Z.

III. PHYSICAL/CHEMICAL CHARACTERISTICS

Boiling Point (F):	214°F
Vapor Pressure (mm Hg):	No Data
Vapor Density (AIR=1):	No Data
Specific Gravity (Water=1):	1.075
Melting Point:	Not Applicable
Evaporation Rate (Butyl Acetate=1):	Slower
Solubility in Water:	Completely soluble in all proportions.
Appearance:	Yellow liquid, nearly odorless

IV. FIRE AND EXPLOSION DATA

Flash Point:	None (Cleveland Open Cup)
Flammable Limits:	LEL: No Data UEL: No Data
Extinguishing Media:	Water, dry chemical, CO_2, foam
Special Fire fighting Procedures:	Self-contained positive pressure breathing apparatus and protective clothing should be worn when fighting fires involving chemicals.
Unusual Fire and Explosion Hazards:	None

V. REACTIVITY DATA

Stability:	Stable
Conditions To Avoid:	None
Incompatibility (Materials To Avoid):	Oxidizing agents.
Hazardous Decomposition or Byproducts:	May release SO_2 on burning

VI. HEALTH HAZARD DATA

Route(s) of Entry:	Inhalation? No Skin? Yes Ingestion? Yes
Health Hazards (Acute and Chronic):	Skin contact may prove locally irritating, causing drying and/or chapping. Ingestion may cause discomfort and/or diarrhea.
Carcinogenicity:	NTP? No IARC Monographs? No OSHA Regulated? No
Signs and Symptoms of Exposure:	Prolonged skin contact may cause drying and/or chapping.
Medical Conditions Generally Aggravated by Exposure:	Not established. Unnecessary exposure to this product or any industrial chemical should be avoided.
Emergency and First Aid Procedures:	Eyes: Immediately flush eyes with water for at least 15 minutes. Call a physician. Skin: Flush with plenty of water. Ingestion: Drink large quantities of water or milk. Do not induce vomiting. If vomiting occurs administer fluids. See a physician for discomfort.

VII. PRECAUTIONS FOR SAFE HANDLING AND USE

Steps to be Taken if Material is Released or Spilled:	Material foams profusely. For small spills recover as much as possible with absorbent material and flush remainder to sewer. Material is biodegradable.
Waste Disposal Method:	Small quantities may be disposed of in sewer. Large quantities should be disposed of in accordance with local ordinances for detergent products.
Precautions to be Taken in Storing and Handling:	No special precautions in storing. Use protective equipment when handling undiluted material.
Other Precautions:	No special requirements other than the good industrial hygiene and safety practices employed with any industrial chemical.

VIII. CONTROL MEASURES

Respiratory Protection (Specify Type):	Not Required
Ventilation:	Local Exhaust-Normal Special-Not Required Mechanical-Not Required Other-Not Required
Protective Gloves:	Impervious gloves are recommended.
Eye Protection:	Goggles and/or splash shields are recommended.
Other Protective Clothing or Equipment:	Not required
Work/Hygienic Practices:	No special practices required

THE INFORMATION HEREIN IS GIVEN IN GOOD FAITH BUT NO WARRANTY IS EXPRESSED OR IMPLIED.

MSDS Material Safety Data Sheet

From: Mallinckrodt Baker, Inc.
222 Red School Lane
Phillipsburg, NJ 08865

Mallinckrodt CHEMICALS | J.T.Baker

24 Hour Emergency Telephone: 908-859-2151
CHEMTREC: 1-800-424-9300

National Response in Canada
CANUTEC: 613-996-6666

Outside U.S. and Canada
Chemtrec: 703-527-3887

NOTE: CHEMTREC, CANUTEC and National Response Center emergency numbers to be used only in the event of chemical emergencies involving a spill, leak, fire, exposure or accident involving chemicals.

All non-emergency questions should be directed to Customer Service (1-800-582-2537) for assistance.

TRICHLOROETHYLENE

MSDS Number: T4940 --- *Effective Date: 09/14/00*

1. Product Identification

Synonyms: Trichloroethene; TCE; acetylene trichloride; Ethinyl trichloride
CAS No.: 79-01-6
Molecular Weight: 131.39
Chemical Formula: C2HCl3
Product Codes:
J.T. Baker: 5376, 9454, 9458, 9464, 9473, 9474
Mallinckrodt: 8598, 8600, 8633

2. Composition/Information on Ingredients

Ingredient	CAS No	Percent	Hazardous
Trichloroethylene	79-01-6	100%	Yes

3. Hazards Identification

Emergency Overview

WARNING! HARMFUL IF SWALLOWED OR INHALED. AFFECTS HEART, CENTRAL NERVOUS SYSTEM, LIVER AND KIDNEYS. CAUSES SEVERE SKIN IRRITATION. CAUSES IRRITATION TO EYES AND RESPIRATORY TRACT. SUSPECT CANCER HAZARD. MAY CAUSE CANCER. Risk of cancer

depends on level and duration of exposure.

J.T. Baker SAF-T-DATA(tm) Ratings (Provided here for your convenience)

Health Rating: 3 - Severe (Cancer Causing)
Flammability Rating: 1 - Slight
Reactivity Rating: 1 - Slight
Contact Rating: 2 - Moderate
Lab Protective Equip: GOGGLES & SHIELD; LAB COAT & APRON; VENT HOOD; PROPER GLOVES
Storage Color Code: Blue (Health)

Potential Health Effects

Inhalation:
Vapors can irritate the respiratory tract. Causes depression of the central nervous system with symptoms of visual disturbances and mental confusion, incoordination, headache, nausea, euphoria, and dizziness. Inhalation of high concentrations could cause unconsciousness, heart effects, liver effects, kidney effects, and death.
Ingestion:
Cases irritation to gastrointestinal tract. May also cause effects similar to inhalation. May cause coughing, abdominal pain, diarrhea, dizziness, pulmonary edema, unconsciousness. Kidney failure can result in severe cases. Estimated fatal dose is 3-5 ml/kg.
Skin Contact:
Cause irritation, redness and pain. Can cause blistering. Continued skin contact has a defatting action and can produce rough, dry, red skin resulting in secondary infection.
Eye Contact:
Vapors may cause severe irritation with redness and pain. Splashes may cause eye damage.
Chronic Exposure:
Chronic exposures may cause liver, kidney, central nervous system, and peripheral nervous system effects. Workers chronically exposed may exhibit central nervous system depression, intolerance to alcohol, and increased cardiac output. This material is linked to mutagenic effects in humans. This material is also a suspect carcinogen.
Aggravation of Pre-existing Conditions:
Persons with pre-existing skin disorders, cardiovascular disorders, impaired liver or kidney or respiratory function, or central or peripheral nervous system disorders may be more susceptible to the effects of the substance.

---

4. First Aid Measures

Inhalation:
Remove to fresh air. If not breathing, give artificial respiration. If breathing is difficult, give oxygen. Call a physician.

Ingestion:
Induce vomiting immediately as directed by medical personnel. Never give anything by mouth to an unconscious person. Call a physician.
Skin Contact:
Immediately flush skin with plenty of soap and water for at least 15 minutes while removing contaminated clothing and shoes. Get medical attention. Wash clothing before reuse. Thoroughly clean shoes before reuse.
Eye Contact:
Immediately flush eyes with plenty of water for at least 15 minutes, lifting lower and upper eyelids occasionally. Get medical attention immediately.

Note to Physician:
Do not administer adrenaline or epinephrine to a victim of chlorinated solvent poisoning.

---

5. Fire Fighting Measures

Fire:
Autoignition temperature: 420C (788F)
Flammable limits in air % by volume:
lel: 8; uel: 12.5
Explosion:
A strong ignition source, e. g., a welding torch, can produce ignition. Sealed containers may rupture when heated.
Fire Extinguishing Media:
Use water spray to keep fire exposed containers cool. If substance does ignite, use CO_2, dry chemical or foam.
Special Information:
In the event of a fire, wear full protective clothing and NIOSH-approved self-contained breathing apparatus with full facepiece operated in the pressure demand or other positive pressure mode. Combustion by-products include phosgene and hydrogen chloride gases. Structural firefighters' clothing provides only limited protection to the combustion products of this material.

---

6. Accidental Release Measures

Ventilate area of leak or spill. Remove all sources of ignition. Wear appropriate personal protective equipment as specified in Section 8. Isolate hazard area. Keep unnecessary and unprotected personnel from entering. Contain and recover liquid when possible. Use non-sparking tools and equipment. Collect liquid in an appropriate container or absorb with an inert material (e. g., vermiculite, dry sand, earth), and place in a chemical waste container. Do not use combustible materials, such as saw dust. Do not flush to sewer! US Regulations (CERCLA) require reporting spills and releases to soil, water and air in excess of reportable quantities. The toll free number for the US Coast Guard National Response Center is (800) 424-8802.

---

7. Handling and Storage

Keep in a tightly closed container, stored in a cool, dry, ventilated area. Protect against physical damage. Isolate from any source of heat or ignition. Isolate from incompatible substances. Containers of this material may be hazardous when empty since they retain product residues (vapors, liquid); observe all warnings and precautions listed for the product.

---

8. Exposure Controls/Personal Protection

Airborne Exposure Limits:
Trichloroethylene:
-OSHA Permissible Exposure Limit (PEL):
100 ppm (TWA), 200 ppm (Ceiling),
300 ppm/5min/2hr (Max)

-ACGIH Threshold Limit Value (TLV):
50 ppm (TWA) 100 ppm (STEL);
listed as A5, not suspected as a human carcinogen.
Ventilation System:
A system of local and/or general exhaust is recommended to keep employee exposures below the Airborne Exposure Limits. Local exhaust ventilation is generally preferred because it can control the emissions of the contaminant at its source, preventing dispersion of it into the general work area. Please refer to the ACGIH document, *Industrial Ventilation, A Manual of Recommended Practices*, most recent edition, for details.
Personal Respirators (NIOSH Approved):
If the exposure limit is exceeded and engineering controls are not feasible, wear a supplied air, full-facepiece respirator, airlined hood, or full-facepiece self-contained breathing apparatus. Breathing air quality must meet the requirements of the OSHA respiratory protection standard (29CFR1910.134). This substance has poor warning properties. Where respirators are required, you must have a written program covering the basic requirements in the OSHA respirator standard. These include training, fit testing, medical approval, cleaning, maintenance, cartridge change schedules, etc. See 29CFR1910.134 for details.
Skin Protection:
Wear impervious protective clothing, including boots, gloves, lab coat, apron or coveralls, as appropriate, to prevent skin contact. Neoprene is a recommended material for personal protective equipment.
Eye Protection:
Use chemical safety goggles and/or a full face shield where splashing is possible. Maintain eye wash fountain and quick-drench facilities in work area.

---

9. Physical and Chemical Properties

Appearance:
Clear, colorless liquid.
Odor:
Chloroform-like odor.
Solubility:
Practically insoluble in water. Readily miscible in organic solvents.
Specific Gravity:
1.47 @ 20C/4C
pH:
No information found.
% Volatiles by volume @ 21C (70F):
100
Boiling Point:
87C (189F)
Melting Point:
-73C (-99F)
Vapor Density (Air=1):
4.5
Vapor Pressure (mm Hg):
57.8 @ 20C (68F)
Evaporation Rate (BuAc=1):
No information found.

---

10. Stability and Reactivity

Stability:
Stable under ordinary conditions of use and storage. Will slowly decompose to hydrochloric acid when exposed to light and moisture.
Hazardous Decomposition Products:
May produce carbon monoxide, carbon dioxide, hydrogen chloride and phosgene when heated to decomposition.
Hazardous Polymerization:
Will not occur.
Incompatibilities:
Strong caustics and alkalis, strong oxidizers, chemically active metals, such as barium, lithium, sodium, magnesium, titanium and beryllium, liquid oxygen.
Conditions to Avoid:
Heat, flame, ignition sources, light, moisture, incompatibles

---

11. Toxicological Information

Toxicological Data:
Trichloroethylene: Oral rat LD50: 5650 mg/kg; investigated as a tumorigen, mutagen, reproductive effector.

Reproductive Toxicity:
This material has been linked to mutagenic effects in humans.

--------\Cancer Lists\----------

Ingredient	---NTP Carcinogen--- Known	Anticipated	IARC Category
Trichloroethylene (79-01-6)	No	Yes	2A

12. Ecological Information

Environmental Fate:
When released into the soil, this material may leach into groundwater. When released into the soil, this material is expected to quickly evaporate. When released to water, this material is expected to quickly evaporate. This material has an experimentally-determined bioconcentration factor (BCF) of less than 100. This material is not expected to significantly bioaccumulate. When released into the air, this material may be moderately degraded by reaction with photochemically produced hydroxyl radicals. When released into the air, this material is expected to have a half-life between 1 and 10 days.
Environmental Toxicity:
The LC50/96-hour values for fish are between 10 and 100 mg/l. This material is expected to be slightly toxic to aquatic life.

13. Disposal Considerations

Whatever cannot be saved for recovery or recycling should be handled as hazardous waste and sent to a RCRA approved incinerator or disposed in a RCRA approved waste facility. Processing, use or contamination of this product may change the waste management options. State and local disposal regulations may differ from federal disposal regulations. Dispose of container and unused contents in accordance with federal, state and local requirements.

14. Transport Information

Domestic (Land, D.O.T.)

Proper Shipping Name: TRICHLOROETHYLENE
Hazard Class: 6.1
UN/NA: UN1710
Packing Group: III
Information reported for product/size: 5GL

International (Water, I.M.O.)

Proper Shipping Name: TRICHLOROETHYLENE
Hazard Class: 6.1
UN/NA: UN1710
Packing Group: III
Information reported for product/size: 5GL

International (Air, I.C.A.O.)

Proper Shipping Name: TRICHLOROETHYLENE
Hazard Class: 6.1
UN/NA: UN1710
Packing Group: III
Information reported for product/size: 5GL

15. Regulatory Information

--------\Chemical Inventory Status - Part 1\--------

Ingredient	TSCA	EC	Japan	Australia
Trichloroethylene (79-01-6)	Yes	Yes	Yes	Yes

--------\Chemical Inventory Status - Part 2\--------

Ingredient	Korea	--Canada-- DSL	NDSL	Phil.
Trichloroethylene (79-01-6)	Yes	Yes	No	Yes

--------\Federal, State & International Regulations - Part 1\--------

Ingredient	-SARA 302- RQ	TPQ	------SARA 313------ List	Chemical Catg.
Trichloroethylene (79-01-6)	No	No	Yes	No

--------\Federal, State & International Regulations - Part 2\--------

Ingredient	CERCLA	-RCRA- 261.33	-TSCA- 8(d)
Trichloroethylene (79-01-6)	100	U228	No

Chemical Weapons Convention: No TSCA 12(b): No CDTA: No
SARA 311/312: Acute: Yes Chronic: Yes Fire: No Pressure: No
Reactivity: No (Pure / Liquid)

WARNING:
THIS PRODUCT CONTAINS A CHEMICAL(S) KNOWN TO THE STATE OF CALIFORNIA TO CAUSE CANCER.

Australian Hazchem Code: No information found.
Poison Schedule: S6
WHMIS:
This MSDS has been prepared according to the hazard criteria of the Controlled Products Regulations (CPR) and the MSDS contains all of the information required by the CPR.

16. Other Information

NFPA Ratings: Health: 2 Flammability: 1 Reactivity: 0
Label Hazard Warning:
WARNING! HARMFUL IF SWALLOWED OR INHALED. AFFECTS HEART, CENTRAL NERVOUS SYSTEM, LIVER AND KIDNEYS. CAUSES SEVERE SKIN IRRITATION. CAUSES IRRITATION TO EYES AND RESPIRATORY TRACT. SUSPECT CANCER HAZARD. MAY CAUSE CANCER. Risk of cancer depends on level and duration of exposure.
Label Precautions:
Do not get in eyes, on skin, or on clothing.
Do not breathe vapor.
Keep container closed.
Use only with adequate ventilation.
Wash thoroughly after handling.
Keep away from heat and flame.
Label First Aid:
If swallowed, induce vomiting immediately as directed by medical personnel. Never give anything by mouth to an unconscious person. If inhaled, remove to fresh air. If not breathing, give artificial respiration. If breathing is difficult, give oxygen. In case of contact, immediately flush eyes or skin with plenty of water for at least 15 minutes. Remove contaminated clothing and shoes. Wash clothing before reuse. In all cases call a physician. Note to physician: Do not administer adrenaline or epinephrine to a victim of chlorinated solvent poisoning.
Product Use:
Laboratory Reagent.
Revision Information:
MSDS Section(s) changed since last revision of document include: 8, 11.
Disclaimer:
****

Mallinckrodt Baker, Inc. provides the information contained herein in good faith but makes no representation as to its comprehensiveness or accuracy. This document is intended only as a guide to the appropriate precautionary handling of the material by a properly trained person using this product. Individuals receiving the information must exercise their independent judgment in determining its appropriateness for a particular purpose. MALLINCKRODT BAKER, INC. MAKES NO REPRESENTATIONS OR WARRANTIES, EITHER EXPRESS OR IMPLIED, INCLUDING WITHOUT LIMITATION ANY WARRANTIES OF MERCHANTABILITY, FITNESS FOR A PARTICULAR PURPOSE WITH RESPECT TO THE INFORMATION SET FORTH HEREIN OR THE PRODUCT TO WHICH THE INFORMATION REFERS. ACCORDINGLY, MALLINCKRODT BAKER, INC. WILL NOT BE RESPONSIBLE FOR DAMAGES RESULTING FROM USE OF OR RELIANCE UPON THIS INFORMATION.
****

Prepared by: Strategic Services Division
Phone Number: (314) 539-1600 (U.S.A.)

MSDS Material Safety Data Sheet

From: Mallinckrodt Baker, Inc.
222 Red School Lane
Phillipsburg, NJ 08865

Mallinckrodt CHEMICALS J.T.Baker

24 Hour Emergency Telephone: 908-859-2151
CHEMTREC: 1-800-424-9300

National Response in Canada
CANUTEC: 613-996-6666

Outside U.S. and Canada
Chemtrec: 703-527-3887

NOTE: CHEMTREC, CANUTEC and National Response Center emergency numbers to be used only in the event of chemical emergencies involving a spill, leak, fire, exposure or accident involving chemicals.

All non-emergency questions should be directed to Customer Service (1-800-582-2537) for assistance.

TETRACHLOROETHYLENE

MSDS Number: T0767 --- *Effective Date: 08/02/00*

1. Product Identification

Synonyms: ethylene tetrachloride; tetrachloroethene; perchloroethylene; carbon bichloride; carbon dichloride
CAS No.: 127-18-4
Molecular Weight: 165.83
Chemical Formula: Cl2C:CCl2
Product Codes:
J.T. Baker: 9218, 9360, 9453, 9465, 9469
Mallinckrodt: 1933, 8058

2. Composition/Information on Ingredients

Ingredient	CAS No	Percent	Hazardous
Tetrachloroethylene	127-18-4	99 - 100%	Yes

3. Hazards Identification

Emergency Overview

WARNING! HARMFUL IF SWALLOWED, INHALED OR ABSORBED THROUGH SKIN. CAUSES IRRITATION TO SKIN, EYES AND RESPIRATORY TRACT. AFFECTS CENTRAL NERVOUS SYSTEM, LIVER

AND KIDNEYS. SUSPECT CANCER HAZARD. MAY CAUSE CANCER. Risk of cancer depends on level and duration of exposure.

J.T. Baker SAF-T-DATA(tm) Ratings (Provided here for your convenience)

Health Rating: 3 - Severe (Cancer Causing)
Flammability Rating: 0 - None
Reactivity Rating: 1 - Slight
Contact Rating: 2 - Moderate
Lab Protective Equip: GOGGLES & SHIELD; LAB COAT & APRON; VENT HOOD; PROPER GLOVES
Storage Color Code: Blue (Health)

Potential Health Effects

Inhalation:
Irritating to the upper respiratory tract. Giddiness, headache, intoxication, nausea and vomiting may follow the inhalation of large amounts while massive amounts can cause breathing arrest, liver and kidney damage, and death. Concentrations of 600 ppm and more can affect the central nervous system after a few minutes.
Ingestion:
Not highly toxic by this route because of low water solubility. Used as an oral dosage for hookworm (1 to 4 ml). Causes abdominal pain, nausea, diarrhea, headache, and dizziness.
Skin Contact:
Causes irritation to skin. Symptoms include redness, itching, and pain. May be absorbed through the skin with possible systemic effects.
Eye Contact:
Causes irritation, redness, and pain.
Chronic Exposure:
May cause liver, kidney or central nervous system damage after repeated or prolonged exposures. Suspected cancer risk from animal studies.
Aggravation of Pre-existing Conditions:
Persons with pre-existing skin disorders or eye problems or impaired liver or kidney function may be more susceptible to the effects of the substance. The use of alcoholic beverages enhances the toxic effects.

---

4. First Aid Measures

Inhalation:
Remove to fresh air. If not breathing, give artificial respiration. If breathing is difficult, give oxygen. Call a physician.
Ingestion:
Aspiration hazard. If swallowed, DO NOT INDUCE VOMITING. Give large quantities of water. Never give anything by mouth to an unconscious person. Get medical attention

immediately.
Skin Contact:
Wash skin with soap or mild detergent and water for at least 15 minutes while removing contaminated clothing and shoes. Wash clothing before reuse. Call a physician.
Eye Contact:
Immediately flush eyes with plenty of water for at least 15 minutes, lifting lower and upper eyelids occasionally. Get medical attention immediately.

Note to Physician:
Do not administer adrenaline or epinephrine to a victim of chlorinated solvent poisoning.

---

5. Fire Fighting Measures

Fire:
Not considered to be a fire hazard but becomes hazardous in a fire situation because of vapor generation and possible degradation to phosgene (highly toxic) and hydrogen chloride (corrosive). Vapors are heavier than air and collect in low-lying areas.
Explosion:
Not considered to be an explosion hazard. Containers may explode when involved in a fire.
Fire Extinguishing Media:
Use any means suitable for extinguishing surrounding fire. Water spray may be used to keep fire exposed containers cool.
Special Information:
In the event of a fire, wear full protective clothing and NIOSH-approved self-contained breathing apparatus with full facepiece operated in the pressure demand or other positive pressure mode.

---

6. Accidental Release Measures

Ventilate area of leak or spill. Wear appropriate personal protective equipment as specified in Section 8. Isolate hazard area. Keep unnecessary and unprotected personnel from entering. Contain and recover liquid when possible. Neutralize with alkaline material (soda ash, lime), then absorb with an inert material (e. g., vermiculite, dry sand, earth), and place in a chemical waste container. Do not use combustible materials, such as saw dust. Do not flush to sewer! US Regulations (CERCLA) require reporting spills and releases to soil, water and air in excess of reportable quantities. The toll free number for the US Coast Guard National Response Center is (800) 424-8802.

---

7. Handling and Storage

Store in a cool, dry, ventilated area away from sources of heat or ignition. Isolate from flammable materials. Protect from direct sunlight. Wear special protective equipment (Sec. 8) for maintenance break-in or where exposures may exceed established exposure

levels. Wash hands, face, forearms and neck when exiting restricted areas. Shower, dispose of outer clothing, change to clean garments at the end of the day. Avoid cross-contamination of street clothes. Wash hands before eating and do not eat, drink, or smoke in workplace. Containers of this material may be hazardous when empty since they retain product residues (vapors, liquid); observe all warnings and precautions listed for the product.

8. Exposure Controls/Personal Protection

Airborne Exposure Limits:
-OSHA Permissible Exposure Limit (PEL):
100 ppm (TWA), 200 ppm (ceiling),
300 ppm/5min/3-hour (max)

-ACGIH Threshold Limit Value (TLV):
25 ppm (TWA), 100 ppm (STEL); listed as A3, animal carcinogen
Ventilation System:
A system of local and/or general exhaust is recommended to keep employee exposures below the Airborne Exposure Limits. Local exhaust ventilation is generally preferred because it can control the emissions of the contaminant at its source, preventing dispersion of it into the general work area. Please refer to the ACGIH document, *Industrial Ventilation, A Manual of Recommended Practices*, most recent edition, for details.
Personal Respirators (NIOSH Approved):
If the exposure limit is exceeded, wear a supplied air, full-facepiece respirator, airlined hood, or full-facepiece self-contained breathing apparatus.
Skin Protection:
Wear impervious protective clothing, including boots, gloves, lab coat, apron or coveralls, as appropriate, to prevent skin contact.
Eye Protection:
Use chemical safety goggles and/or full face shield where dusting or splashing of solutions is possible. Maintain eye wash fountain and quick-drench facilities in work area.

9. Physical and Chemical Properties

Appearance:
Clear, colorless liquid.
Odor:
Ethereal odor.
Solubility:
0.015 g in 100 g of water.
Specific Gravity:
1.62 @ 20C/4C
pH:
No information found.

% Volatiles by volume @ 21C (70F):
100
Boiling Point:
121C (250F)
Melting Point:
-19C (-2F)
Vapor Density (Air=1):
5.7
Vapor Pressure (mm Hg):
18 @ 25C (77F)
Evaporation Rate (BuAc=1):
0.33 (trichloroethylene = 1)

10. Stability and Reactivity

Stability:
Stable under ordinary conditions of use and storage. Slowly decomposed by light. Deteriorates rapidly in warm, moist climates.
Hazardous Decomposition Products:
Carbon dioxide and carbon monoxide may form when heated to decomposition. Hydrogen chloride gas and phosgene gas may be formed upon heating. Decomposes with moisture to yield trichloroacetic acid and hydrochloric acid.
Hazardous Polymerization:
Will not occur.
Incompatibilities:
Strong acids, strong oxidizers, strong alkalis, especially NaOH, KOH; finely divided metals, especially zinc, barium, lithium. Slowly corrodes aluminum, iron and zinc.
Conditions to Avoid:
Moisture, light, heat and incompatibles.

11. Toxicological Information

Oral rat LD50: 2629 mg/kg; inhalation rat LC50: 34.2 g/m3/8H; investigated as a tumorigen, mutagen, reproductive effector.

--------\Cancer Lists\----------

Ingredient	---NTP Carcinogen--- Known	Anticipated	IARC Category
Tetrachloroethylene (127-18-4)	No	Yes	2A

12. Ecological Information

Environmental Fate:

When released into the soil, this material is expected to quickly evaporate. When released into the soil, this material may leach into groundwater. When released into the soil, this material may biodegrade to a moderate extent. When released to water, this material is expected to quickly evaporate. When released into water, this material is not expected to biodegrade. This material is not expected to significantly bioaccumulate. When released into the air, this material may be moderately degraded by reaction with photochemically produced hydroxyl radicals.

Environmental Toxicity:

The LC50/96-hour values for fish are between 1 and 10 mg/l. The LC50/96-hour values for fish are between 10 and 100 mg/l. This material is expected to be toxic to aquatic life.

---

13. Disposal Considerations

Whatever cannot be saved for recovery or recycling should be handled as hazardous waste and sent to a RCRA approved incinerator or disposed in a RCRA approved waste facility. Processing, use or contamination of this product may change the waste management options. State and local disposal regulations may differ from federal disposal regulations. Dispose of container and unused contents in accordance with federal, state and local requirements.

---

14. Transport Information

Domestic (Land, D.O.T.)

Proper Shipping Name: TETRACHLOROETHYLENE
Hazard Class: 6.1
UN/NA: UN1897
Packing Group: III
Information reported for product/size: 20L

International (Water, I.M.O.)

Proper Shipping Name: TETRACHLOROETHYLENE
Hazard Class: 6.1
UN/NA: UN1897
Packing Group: III
Information reported for product/size: 20L

International (Air, I.C.A.O.)

Proper Shipping Name: TETRACHLOROETHYLENE
Hazard Class: 6.1
UN/NA: UN1897
Packing Group: III
Information reported for product/size: 20L

15. Regulatory Information

--------\Chemical Inventory Status - Part 1\--------

Ingredient	TSCA	EC	Japan	Australia
Tetrachloroethylene (127-18-4)	Yes	Yes	Yes	Yes

--------\Chemical Inventory Status - Part 2\--------

Ingredient	Korea	Canada DSL	Canada NDSL	Phil.
Tetrachloroethylene (127-18-4)	Yes	Yes	No	Yes

--------\Federal, State & International Regulations - Part 1\--------

Ingredient	SARA 302 RQ	SARA 302 TPQ	SARA 313 List	SARA 313 Chemical Catg.
Tetrachloroethylene (127-18-4)	No	No	Yes	No

--------\Federal, State & International Regulations - Part 2\--------

Ingredient	CERCLA	RCRA 261.33	TSCA 8(d)
Tetrachloroethylene (127-18-4)	100	U210	No

Chemical Weapons Convention: No TSCA 12(b): No CDTA: No
SARA 311/312: Acute: Yes Chronic: Yes Fire: No Pressure: No
Reactivity: No (Pure / Liquid)

WARNING:
THIS PRODUCT CONTAINS A CHEMICAL(S) KNOWN TO THE STATE OF CALIFORNIA TO CAUSE CANCER.

Australian Hazchem Code: 2[Z]
Poison Schedule: No information found.
WHMIS:
This MSDS has been prepared according to the hazard criteria of the Controlled Products Regulations (CPR) and the MSDS contains all of the information required by the CPR.

16. Other Information

NFPA Ratings: Health: 2 Flammability: 0 Reactivity: 0
Label Hazard Warning:
WARNING! HARMFUL IF SWALLOWED, INHALED OR ABSORBED THROUGH SKIN. CAUSES IRRITATION TO SKIN, EYES AND RESPIRATORY TRACT. AFFECTS CENTRAL NERVOUS SYSTEM, LIVER AND KIDNEYS. SUSPECT CANCER HAZARD. MAY CAUSE CANCER. Risk of cancer depends on level and duration of exposure.
Label Precautions:
Do not get in eyes, on skin, or on clothing.

Do not breathe vapor or mist.
Keep container closed.
Use only with adequate ventilation.
Wash thoroughly after handling.

Label First Aid:

If inhaled, remove to fresh air. If not breathing, give artificial respiration. If breathing is difficult, give oxygen. If swallowed, DO NOT INDUCE VOMITING. Give large quantities of water. Never give anything by mouth to an unconscious person. In case of contact, immediately flush eyes or skin with plenty of water for at least 15 minutes while removing contaminated clothing and shoes. Wash clothing before reuse. In all cases call a physician.

Product Use:

Laboratory Reagent.

Revision Information:

No changes.

Disclaimer:

****

Mallinckrodt Baker, Inc. provides the information contained herein in good faith but makes no representation as to its comprehensiveness or accuracy. This document is intended only as a guide to the appropriate precautionary handling of the material by a properly trained person using this product. Individuals receiving the information must exercise their independent judgment in determining its appropriateness for a particular purpose. MALLINCKRODT BAKER, INC. MAKES NO REPRESENTATIONS OR WARRANTIES, EITHER EXPRESS OR IMPLIED, INCLUDING WITHOUT LIMITATION ANY WARRANTIES OF MERCHANTABILITY, FITNESS FOR A PARTICULAR PURPOSE WITH RESPECT TO THE INFORMATION SET FORTH HEREIN OR THE PRODUCT TO WHICH THE INFORMATION REFERS. ACCORDINGLY, MALLINCKRODT BAKER, INC. WILL NOT BE RESPONSIBLE FOR DAMAGES RESULTING FROM USE OF OR RELIANCE UPON THIS INFORMATION.

****

Prepared by: Strategic Services Division
Phone Number: (314) 539-1600 (U.S.A.)

Appendix E
Request for Laboratory Sample Analysis and Data Evaluation Form

REQUEST FOR LABORATORY SAMPLE ANALYSIS AND DATA EVALUATION

It is required that a completed request form be submitted to the QA Office with all project plans in order to expedite QA Office scheduling and ensure timeliness of analytical support and data evaluation services.

EPA Site Name:		Site Location (City/State):
EPA Program:	Site Phase:	
CERCLIS #:	GPRA #: 02D or 03E	SSID #:
EPA RPM/SAM/PO:		Mail Code:
RPM/SAM/PO Phone Number:	Fax Number:	RPM/SAM/PO Email:
Sampler Name:		Company:
Sampler Office Phone Number:	Sampler Fax Number:	Sampler Mobile Phone Number:
Sampler Address:		Sampler Email:
Proposed Sampling Dates:		

Signature and title of EPA Remedial Project Manager, Site Assessment Manager, Project Officer, or designee authorizing approval of this analytical support and data evaluation request:

Signature and Title: _____ Date: _____

INCLUDE AS PART OF THE SAMPLING AND ANALYSIS PLAN OR FAX TO REGIONAL SAMPLE CONTROL COORDINATOR (RSCC) AT (415) 947-3564. QUESTIONS CONTACT RSCC AT (415) 972-3814 OR REGION 9 QUALITY ASSURANCE MANAGER AT (415) 972-3798.

Description of requested analytical services

Compounds/Analytes	Number of Samples	Matrix	Methods by Number	Type of Data Deliverable and Turn Around Time	
				Preliminary Data*	Data Package

*** Note: EDD = Electronic Data Deliverable HCDD = Hard Copy Data Deliverable**

Unless otherwise specified, the QA Office will utilize the detection limits and quality control criteria listed in the requested method for scheduling and data evaluation purposes. If other detection limits or quality control criteria are needed, please attach relevant Data Quality Indicator (DQI) tables providing project-specific criteria. In instances where this information is not included in the method and no project-specific DQI table is otherwise provided, the RSCC and data evaluators will default to relevant QA Office DQI

INCLUDE AS PART OF THE SAMPLING AND ANALYSIS PLAN OR FAX TO REGIONAL SAMPLE CONTROL COORDINATOR (RSCC) AT (415) 947-3564. QUESTIONS CONTACT RSCC AT (415) 972-3814 OR REGION 9 QUALITY ASSURANCE MANAGER AT (415) 972-3798.

tables.

Supplementary analytical request information

Include any discussion of expanded or reduced analyte lists, reporting units, modified reporting limits, specialized preparation or analytical procedures, specialized sampling devices (i.e., Encore), etc.

INCLUDE AS PART OF THE SAMPLING AND ANALYSIS PLAN OR FAX TO REGIONAL SAMPLE CONTROL COORDINATOR (RSCC) AT (415) 947-3564. QUESTIONS CONTACT RSCC AT (415) 972-3814 OR REGION 9 QUALITY ASSURANCE MANAGER AT (415) 972-3798.

ORGANIC DATA EVALUATION REQUIREMENTS

Compound(s)	Tier	Percentage Level	Method(s) by Number	Notes	Data Reviewer
Volatiles	1A	10 20 25 50 100 Other:___	_____	____	_____
	1B	10 20 25 50 100 Other:___	_____	____	_____
	2	10 20 25 50 100 Other:___	_____	____	_____
	3	10 20 25 50 100 Other:___	_____	____	_____
Semi-Volatiles	1A	10 20 25 50 100 Other:___	_____	____	_____
	1B	10 20 25 50 100 Other:___	_____	____	_____
	2	10 20 25 50 100 Other:___	_____	____	_____
	3	10 20 25 50 100 Other:___	_____	____	_____
Pesticides	1A	10 20 25 50 100 Other:___	_____	____	_____
	1B	10 20 25 50 100 Other:___	_____	____	_____
	2	10 20 25 50 100 Other:___	_____	____	_____
	3	10 20 25 50 100 Other:___	_____	____	_____
Herbicides	1A	10 20 25 50 100 Other:___	_____	____	_____
	1B	10 20 25 50 100 Other:___	_____	____	_____
	2	10 20 25 50 100 Other:___	_____	____	_____
	3	10 20 25 50 100 Other:___	_____	____	_____
PCBs	1A	10 20 25 50 100 Other:___	_____	____	_____
	1B	10 20 25 50 100 Other:___	_____	____	_____
	2	10 20 25 50 100 Other:___	_____	____	_____
	3	10 20 25 50 100 Other:___	_____	____	_____
Other:					
_____	__	10 20 25 50 100 Other:___	_____	____	_____
_____	__	10 20 25 50 100 Other:___	_____	____	_____
_____	__	10 20 25 50 100 Other:___	_____	____	_____
_____	__	10 20 25 50 100 Other:___	_____	____	_____

Notes or Special Criteria (i.e., compounds and levels of concern, action levels, targeted samples, QC criteria changes, criteria for selection of focused review, etc.):

1. _____

2. _____

3. _____

4. _____

INCLUDE AS PART OF THE SAMPLING AND ANALYSIS PLAN OR FAX TO REGIONAL SAMPLE CONTROL COORDINATOR (RSCC) AT (415) 947-3564. QUESTIONS CONTACT RSCC AT (415) 972-3814 OR REGION 9 QUALITY ASSURANCE MANAGER AT (415) 972-3798.

5. _____

6. _____

7. _____

INORGANIC DATA EVALUATION REQUIREMENTS

Compound(s)	Tier	Percentage Level	Method(s) by Number	Notes	Data Reviewer
Metals	1A	10 20 25 50 100 Other:___	_____	____	_____
	1B	10 20 25 50 100 Other:___	_____	____	_____
	2	10 20 25 50 100 Other:___	_____	____	_____
	3	10 20 25 50 100 Other:___	_____	____	_____
Cyanide	1A	10 20 25 50 100 Other:___	_____	____	_____
	1B	10 20 25 50 100 Other:___	_____	____	_____
	2	10 20 25 50 100 Other:___	_____	____	_____
	3	10 20 25 50 100 Other:___	_____	____	_____
General Chemistry	1A	10 20 25 50 100 Other:___	_____	____	_____
	1B	10 20 25 50 100 Other:___	_____	____	_____
	2	10 20 25 50 100 Other:___	_____	____	_____
	3	10 20 25 50 100 Other:___	_____	____	_____
Anions	1A	10 20 25 50 100 Other:___	_____	____	_____
	1B	10 20 25 50 100 Other:___	_____	____	_____
	2	10 20 25 50 100 Other:___	_____	____	_____
	3	10 20 25 50 100 Other:___	_____	____	_____
Other:					
_____	__	10 20 25 50 100 Other:___	_____	____	_____
_____	__	10 20 25 50 100 Other:___	_____	____	_____
_____	__	10 20 25 50 100 Other:___	_____	____	_____
_____	__	10 20 25 50 100 Other:___	_____	____	_____

Notes or Special Criteria (i.e., compounds and levels of concern, action levels, targeted samples, QC criteria changes, criteria for selection of focused review, etc.):

1. _____

2. _____

3. _____

4. _____

5. _____

INCLUDE AS PART OF THE SAMPLING AND ANALYSIS PLAN OR FAX TO REGIONAL SAMPLE CONTROL COORDINATOR (RSCC) AT (415) 947-3564. QUESTIONS CONTACT RSCC AT (415) 972-3814 OR REGION 9 QUALITY ASSURANCE MANAGER AT (415) 972-3798.

6. _____

7. _____

INCLUDE AS PART OF THE SAMPLING AND ANALYSIS PLAN OR FAX TO REGIONAL SAMPLE CONTROL COORDINATOR (RSCC) AT (415) 947-3564. QUESTIONS CONTACT RSCC AT (415) 972-3814 OR REGION 9 QUALITY ASSURANCE MANAGER AT (415) 972-3798.