Work Plan

Treatability Study Work Plan: Bioremediation

811 East Arques Avenue Site
Sunnyvale, California

16 September 2016

Project No. 27005-08-9023

Locus TECHNOLOGIES

Work Plan

Treatability Study Work Plan: Bioremediation

Submitted to:	U.S. Environmental Protection Agency, Region 9	Submitted by:	J. Wesley Hawthorne, P.E., P.G.
Reference:	27005-08-9023	Date:	16 September 2016

Locus Technologies
299 Fairchild Drive
Mountain View, CA 94043

(650) 960-1640

locustec.com

Table of Contents

List of Tables iii

List of Figures iv

List of AppendicesList of Acronyms and Abbreviations vi

1. Introduction 1

1.1. Site Background 1

1.2. Site Hydrogeology 1

1.3. Current Remedial Activities 2

2. Data Quality Objectives (DQO) for Bioremediation Technology 4

2.1. Problem Definition 4

2.2. Goal of Study 4

2.3. Information Inputs 4

2.4. Boundaries of Study 4

2.5. Analytic Approach 5

2.6. Performance and Acceptance Criteria 5

2.7. Data Gathering Plan 5

3. Bioremediation Technology Evaluation 6

3.1. Description 6

3.2. Effectiveness 8

3.3. Implementability 9

3.4. Rationale for Selection 10

3.5. Additional EAB Considerations 10

3.5.1. Sulfate Concentrations 10

© Copyright Locus Technologies, 1997-2016. All rights reserved.

3.5.2. Freon 113 Concentrations 11
3.5.3. DHC Concentrations 11
3.6. EAB Substrate Selection 12
4. Treatability Study Work Plan 13
4.1. Test Goals 13
4.2. Experimental Design and Procedures 14
4.2.1. Pre-Field Activities 14
4.2.2. Field Activities, Equipment and Materials 16
4.3. Sampling and Analysis 20
4.3.1. Biogenic Methane Gas Monitoring 21
4.4. Data Management 22
4.5. Data Analysis and Interpretation 22
4.6. Residuals Management 23
4.7. Community Relations 23
4.8. Reports 23
4.9. Schedule 24
4.10. Management and Staffing 24
4.11. Budget 25
References 26

© Copyright Locus Technologies, 1997-2016. All rights reserved.

List of Tables

Table No	Title
1	Aquifer Depths Below Ground Surface
2	May 2009 Baseline Sampling Analytical Results
3	Enhanced Anaerobic Bioremediation Substrate Comparison
4	Substrate Design Tool Input
5	Substrate Design Tool Output
6	Field Monitoring Parameters During Injection Process
7	Baseline and Post-Injection Groundwater Sampling Frequency, Analysis, and Field Measurements for Monitoring Wells
8	Parameters Sampled and Their Indications for Treatability Study Progress
9	Screening levels and Actions for Soil Gas Methane

© Copyright Locus Technologies, 1997-2016. All rights reserved.

List of Figures

FIGURE NO.	TITLE
1	Site Location Map
2	Site Plan
3	"A" Aquifer TCE Concentration Contours, Fourth Quarter 2014
4	"A" Aquifer cis-1,2-DCE Concentration Contours, Fourth Quarter 2014
5	"A" Aquifer Freon 113 Concentration Contours, Fourth Quarter 2014
6	"B1" Aquifer TCE Concentration Contours, Fourth Quarter 2014
7	"B1" Aquifer cis-1,2-DCE Concentration Contours, Fourth Quarter 2014
8	“B1” Aquifer Freon 113 Concentration Contours, Fourth Quarter 2014
9	"B2" Aquifer TCE Concentration Contours, Fourth Quarter 2014
10	"B2" Aquifer cis-1,2-DCE Concentration Contours, Fourth Quarter 2014
11	“B2” Aquifer Freon 113 Concentration Contours, Fourth Quarter 2014
12	"B3" Aquifer TCE Concentration Contours, Fourth Quarter 2014
13	"B3" Aquifer cis-1,2-DCE Concentration Contours, Fourth Quarter 2014
14	“B3” Aquifer Freon 113 Concentration Contours, Fourth Quarter 2014
15	"A" Aquifer Groundwater Elevations, October 2014
16	"A" Aquifer Geometric Mean TCE Concentrations
17	Proposed Treatability Study Area
18	Proposed Schedule

© Copyright Locus Technologies, 1997-2016. All rights reserved.

19	Organizational Chart
20	Treatability Study Area Lithologic Cross Section

© Copyright Locus Technologies, 1997-2016. All rights reserved.

List of Appendices

APPENDIX	TITLE
A	Monitoring Well Boring Logs

© Copyright Locus Technologies, 1997-2016. All rights reserved.

List of Acronyms and Abbreviations

ACRONYM	DESCRIPTION
1,1-DCE	1,1-Dichloroethene
bgs	Below Ground Surface
CERCLA	Comprehensive Environmental Response, Compensation, and Liability Act
cis-1,2-DCE	cis-1,2-Dichloroethene
CO2	Carbon Dioxide
COC	Chemical of Concern
DHC	Dehalococcoides
DNAPL	Dense Non-Aqueous Phase Liquid
DO	Dissolved Oxygen
DQO	Data Quality Objectives
EAB	Enhanced Anaerobic Bioremediation
EPA	United States Environmental Protection Agency
ESTCP	Environmental Security Technology Certification Program
Freon 113	1,1,2-Trichloro-1,2,2-Trifluoroethane
GAC	Granular Activated Carbon
gpm	Gallons per Minute
HASP	Site-Specific Health and Safety Plan
HLA	Harding Lawson Associates

© Copyright Locus Technologies, 1997-2016. All rights reserved.

ACRONYM	DESCRIPTION
MCL	Maximum Contaminant Level
µg/L	Micrograms per Liter
NPDES	National Pollutant Discharge Elimination System
ORP	Oxidation-Reduction Potential
PCE	Tetrachloroethene
psi	Pounds per Square Inch
QA/QC	Quality Assurance/Quality Control
RD/RA	Remedial Design/Remedial Action
ROD	Record of Decision
ROI	Radius of Influence
RWQCB	Regional Water Quality Control Board
SRS	Slow Release Substrate
SVE	Soil Vapor Extraction
TCE	Trichloroethene
VOC	Volatile Organic Compound
ZVI	Zero Valent Iron

© Copyright Locus Technologies, 1997-2016. All rights reserved.

1. Introduction

This treatability study work plan provides the basis, design and monitoring schedule to implement a bioremediation treatability study at the former Philips Semiconductors facility ("Site"). The objective of this study is to evaluate the effectiveness of in situ enhanced anaerobic bioremediation ("EAB") of VOCs within the "A" aquifer at or near the site source area for the enhancement of reductive dechlorination of chlorinated ethenes as a remedial technology.

1.1. Site Background

The former facility is located in Sunnyvale, California and was comprised of four contiguous parcels: two former semiconductor fabrication and testing facilities located at 811 East Arques Avenue ("811 Arques") and 440 North Wolfe Road ("440 Wolfe") and two office buildings located at 815 and 830 Stewart Drive (Figure 1). The properties are no longer owned or operated by Philips. Past investigations at the site have determined that groundwater is impacted with volatile organic compounds ("VOCs").

Chemicals of concern for the Site were established in the California Regional Water Quality Control Board ("RWQCB") Order 91-104 ("Order"), adopted on 19 June 1991. The eight chemicals are 1,1-dichloroethane, 1,1-dichloroethene, *cis*-1,2-dichloroethene ("*cis*-DCE"), *trans*-1,2-dichloroethene, 1,1,2-trichloro-1,2,2-trifluoroethane (Freon 113), 1,1,1-trichloroethane, trichloroethene ("TCE"), and vinyl chloride. VOC concentrations at the site are shown in Figures 3-14. The principal constituent of concern is TCE which, along with its daughter compounds, will be the focus of the pilot study test described in this work plan.

1.2. Site Hydrogeology

The aquifer system at the site has been described in detail in the Remedial Investigation Report [Harding Lawson Associates (HLA) et al., 1991]. The subsurface has been divided into the "A" and "B" aquifer zones. The aquifers occur at the approximate depths listed in Table 1.

© Copyright Locus Technologies, 1997-2016. All rights reserved.

Previous investigations at the site have revealed that the aquifers at the site have varying thicknesses and are frequently discontinuous. At some locations, more than one water-bearing unit may be present within an aquifer. There are also localized areas where aquifers coalesce. The "A" aquifer is generally more laterally continuous at the site than the other aquifers (EMCON, 1996) and characterized by silty and clayey sand with thin, localized sandy and gravelly channel deposits. "A" aquifer groundwater elevation contours for the October 2014 monitoring event are presented on Figure 15. Boring logs of monitoring well within the treatment area in the “A” aquifer are presented in Appendix A. The lithographic characteristics most commonly observed along the screening interval range from sand to silty sand (SP-SM), silty sand (SM), sandy clay (CL), clayey sand (SC), and clayey gravel (GC).

Regional groundwater flow in the "A" aquifer is generally northward at the site. However, operating extraction wells, trenches, and sumps cause the groundwater flow direction to differ from this in the vicinity of the site.

1.3. Current Remedial Activities

An extensive groundwater extraction and monitoring program monitors and controls the migration of VOCs in the groundwater beneath the Site. The system consists of two extraction trenches, one near the former source area north of the 811 Arques building (811T); and the other located north of 440 North Wolfe Road (440T) property; and 22 extraction wells located throughout the Site (Figure 2). Groundwater from all of the aforementioned extraction points is conveyed to a treatment system located on the 440 North Wolfe Road property. Extracted groundwater is treated by an ultraviolet (UV) peroxide oxidation system followed by air stripping and is ultimately discharged to the Sunnyvale East Channel in accordance with NPDES Permit No. CAG912003, Order No. R2-2009-0059. Groundwater drawdown induced by the extraction system at the site is demonstrated in Figure 15. Water elevation were measured in October 2014 as part of ongoing monitoring activities.

© Copyright Locus Technologies, 1997-2016. All rights reserved.

The remedial system has done an adequate job to date of reducing VOC mass; however, the effectiveness of the system has declined over time, as is commonly the case with groundwater extraction systems. Natural mass transport mechanisms (diffusion, dispersion, adsorption, etc.) will continue to limit the rate of VOC mass removal in the subsurface. The heterogeneous soils in the aquifers that contain silts and clays in addition to sands and gravels retain some VOCs, thus retarding VOC mass removal by the extraction wells. Fine-grained materials adsorb VOCs from the groundwater. Areas where VOCs have sorbed onto the finer-grained soils may act as a continuing source of VOCs to groundwater for many years. As a result, many years may be required before remedial goals are attained using this technology alone.

© Copyright Locus Technologies, 1997-2016. All rights reserved.

2. Data Quality Objectives (DQO) for Bioremediation Technology

The data collection process in support of the bioremediation treatability study will adapt the seven data quality objectives in the EPA Data Quality Objectives Process for Hazardous Waste Site Investigations (EPA, 2000). The following DQO steps will assist in addressing site-specific questions during the investigation, identify the type and quantity of data, formulate the appropriate analytical methods specific to the quality of data, and establish performance and acceptance criteria for the technology.

2.1. Problem Definition

The VOC-impacted groundwater at the site is described in Sections 1.1 and 1.3.

2.2. Goal of Study

The objectives of this treatability study are detailed in Section 4.1.

2.3. Information Inputs

The sampling plan for this study is detailed in Section 4.3 of the Work Plan and supplemented by Table 7 at the end of this document. Table 7 summarizes the sampling wells, sampling frequency, analytical methods, and field measurements which apply to the study. The screen interval depth, boring depth, and diameter of the monitoring wells are described in the boring logs in Appendix A. A lithologic cross-section of the treatability study area is shown in Figure 20. Field and analytical data will be obtained from nine existing monitoring wells (refer to Table 7) and, if necessary, ad hoc sample locations. Methods to evaluate the distribution of the substrate during and post injection can be found in Section 4.2.2.3.

2.4. Boundaries of Study

The study area covers 5,800 sq ft of a former solvent site located at 811 Arques Ave in Sunnyvale, California (Figure 17 and Figure 1, respectively). This area contains the highest concentrations of TCE, cis-1,2-DCE, and Freon 113 (refer to Figure 3, 4, and 5). These boundaries are discussed in Section

© Copyright Locus Technologies, 1997-2016. All rights reserved.

4.2. The depth of the substrate injections will range from 10 ft to 30 ft bgs targeting the dissolved mass within the "A" aquifer (refer to Section 4.2.2.1). The treatability study is expected to last one year, and further schedule details are provided in Section 4.9. Refer to Section 4.8 regarding reporting for documenting injection activities and treatability study results.

2.5. Analytic Approach

Results of the treatability study, are expected to inform the development of a full-scale EAB program to remediate the impacted groundwater emanating from the source area. The EAB system will be evaluated for effectiveness based on data collected throughout the study. Table 8 describes how parameter data will be interpreted to determine the success of the treatment based on the criteria set forth in Sections 4.3 and 4.5. Additionally, if concentrations of individual VOCs in groundwater do not decrease, other potential causes for the persistence of the VOCs will be evaluated.

2.6. Performance and Acceptance Criteria

Quality control limits for laboratory analyses, which meet DQOs, are documented in Appendix A of the QAPP. Quality control of field samples is addressed in Section 3.5.1 of the QAPP. The laboratory will conduct the initial review and verification of data. See Section 5.2 of the QAPP for details regarding laboratory data screening and qualifiers. The Project Quality Assurance Officer will validate data to confirm that practitioner objectives have been satisfied per established criteria and that data are suitable for inclusion in data analysis. For further information, see Section 5.3 of the QAPP.

2.7. Data Gathering Plan

Sampling is outlined in Section 4.3 of this Work Plan and in Section 3 of the QAPP.

© Copyright Locus Technologies, 1997-2016. All rights reserved.

3. Bioremediation Technology Evaluation

3.1. Description

In situ bioremediation of chlorinated ethenes involves stimulating anaerobic microorganisms to convert chlorinated ethenes to environmentally non-toxic by-products. This may be done with biostimulation and/or bioaugmentation. Biostimulation includes activities that stimulate the growth and activity of microorganisms already present in the subsurface. Bioaugmentation is the addition of selected microorganisms to the treatment zone to enhance the biological activities. The ultimate aim of a bioremediation program at the Arques Site would be to reduce the groundwater concentrations of chlorinated ethenes.

For anaerobic biodegradation to occur, the dissolved oxygen (DO) concentration must be very low, and the oxidation-reduction potential (ORP) must be strongly negative, indicating highly reducing conditions (EPA, 1998). Biostimulation technologies may be used to convert an aerobic (oxidizing) to an anaerobic (reducing) environment suitable for the anaerobic microbes to thrive. Alternatively, they may be used to provide an electron source (substrate) for the microbes to enable them to reduce the chlorinated ethenes or to provide nutrients to maintain microbial activity and growth. Under anaerobic conditions, many microorganisms are capable of fermentation of organic matter to produce hydrogen. When a substrate is injected, aerobic bacteria begin to degrade it, eventually depleting the aquifer of oxygen and lowering the ORP.

After the DO is consumed, anaerobic microorganisms typically use other electron acceptors in the following order: nitrate, manganese and ferric iron oxyhydroxides, sulfate, then carbon dioxide. In the absence of nitrate and dissolved oxygen, chlorinated solvents compete with other electron acceptors and donors, especially sulfate and carbon dioxide. The chlorinated solvent is utilized as an electron acceptor, and a chlorine atom is removed and replaced with a hydrogen atom in a process known as reductive dechlorination.

© Copyright Locus Technologies, 1997-2016. All rights reserved.

There are many microbes capable of reducing TCE to DCE (especially the cis-1,2-DCE isomer). These steps are more energetically favorable than the reduction of DCE and vinyl chloride to ethene. Furthermore, the reduction of TCE does not require as strongly reducing conditions that are necessary for the less chlorinated compounds (EPA, 1998). At some sites, reductive dechlorination of TCE occurs, but the process stops as DCE concentrations increase. If the treatment zone reducing conditions are not optimal, it may not be possible for the microbes to complete the reduction to ethene. Applying additional substrate and bioaugmentation culture to the treatment zone will often result in more reducing conditions, rectifying the problem.

Several fermentable substrates can be used to stimulate reductive dechlorination. These include carbohydrates (sugars), alcohols, oils, solids (e.g., bark mulch, chitin), and complex compounds (e.g., whey and cellulose). Examples of commercially-available substrates commonly used in bioremediation include Emulsified Vegetable Oils such as EOS (EOS Remediation), Newman Zone (RNAS, Inc.), SRS®-SD (Terra Systems, Inc.), and LactOil™ (JRW Bioremediation, LLC). These products are used as electron donors to stimulate growth of indigenous aerobic bacteria, which consume dissolved oxygen, thus changing the subsurface environment from oxidizing to reducing. As the substrate is broken down, hydrogen is released, causing further reduction, and providing an electron donor source for anaerobic bacteria (EPA, 1998).

Additional products that can be used to create reducing conditions and enhance growth of anaerobic bacteria include: SRS-Z®, which is a slow-release organic carbon and zero-valent iron (ZVI) emulsion from Terra Systems; WilClearTM , a soluble lactate concentrate from JRW Bioremediation, LLC; HRC, a controlled-release polylactate ester from Regenesis, Ltd.; 3-D Microemulsion, also from Regenesis, Ltd., which uses a three-stage donor release mechanism for immediate, mid-range, and long-term release of hydrogen into the groundwater.

Table 3 identifies several different EAB substrates investigated as a part of this study and compares them based on criteria such as cost, longevity, and implementability.

© Copyright Locus Technologies, 1997-2016. All rights reserved.

3.2. Effectiveness

EAB has been effectively implemented at the adjacent AMD and TRW Microwave sites (AMEC, 2012; AECOM, 2012). At the AMD site, 2,400 pounds of molasses have been injected into the treatment zone that resulted in up to 90% reduction in concentrations of TCE, cDCE, and vinyl chloride (AMEC, 2012). Similarly at the TRW site, 5,780 pounds of EHC-L, 7,200 pounds of ZVI, and 250 gallons of Anaerobic Biochem Plus (ABC+) were injected to create a biobarrier that also stimulated more than 90% reductions in VOC concentrations (AECOM, 2012). With similar site conditions at 811 East Arques, EAB is expected to effectively target contaminant mass in the 811 East Arques source zone.

EAB can be expected to decrease the VOC concentrations within the treatment area and some distance downgradient of the treatment area. Coupled with bioaugmentation, the remedial system will improve biological activity by elevating baseline subsurface microbial populations of dehalococcoides (DHC) to a recommended population greater than 106 Cells/L. This alternative may result in degradation of TCE, with a temporary accumulation of cis-1,2-DCE and vinyl chloride before ultimate degradation of these byproducts to ethene. Additional consideration will be given to the degradation of elevated levels of Freon 113 within the test area (only elevated area at Site), which may inhibit the biotransformation of VOCs, if not completely reduced by microbial activity. To enhance the eradication of Freon 113, a ZVI-containing substrate will be applied to the portion of the test area with elevated concentrations (Figure 5) to promote the abiotic degradation of Freon 113 and minimize any potential VOC degradation inhibition.

As is the case for any injection alternative, sufficient volume and distribution of the substrate in the application area is critical to the effectiveness of bioremediation. The design volume of the substrate requires evaluation of aquifer geochemical and hydraulic properties to determine site specific electron acceptors. The Substrate Estimating Tool for Enhanced Anaerobic Bioremediation of Chlorinated Solvents developed by Parsons Infrastructure & Technology Group, Inc. is available to practitioners through the U.S. Department of Defense's Environmental Security Technology Certification Program

© Copyright Locus Technologies, 1997-2016. All rights reserved.

(ESTCP) to assist in the evaluation of a site for in-situ anaerobic enhanced bioremediation. The calculation tool estimates substrate volume based on the electron acceptor demand over the design life of the project.

The injection process involves the introduction of substrate in conditioned water at target pressures to displace resident groundwater with the substrate, typically 10% of effective pore volume. Thus, the local mobility of the contaminants may increase temporarily. However, VOC mass would soon be reduced by the abiotic and biological degradation resulting from the injected substrates. Vegetable oil substrates and zero valent iron can offer additional degradation pathways therefore expediting VOC mass removal at the site. After the conclusion of the remedial actions, concentrations may rebound to some extent due to the long-term desorption of chemicals from fine-grained, limited biological activity, and release from oil substrates as it depletes. At a minimum, concentrations are expected to rebound to values upgradient of the injection areas. However, rebound potential for EAB may be reduced by reestablishing geochemical conditions that are conducive to anaerobic biodegradation.

3.3. Implementability

Bioremediation is a well-established process and is technically feasible. Bioremediation programs at two adjacent sites with similar geochemical conditions have shown this technology to be successful in reducing TCE concentrations.

The carbon substrate and dechlorinating microbial cultures would be injected into three injection points using direct push. The iron containing substrate (ZVI) would be injected into two injection points in a test area targeting the area of elevated Freon 113 concentrations within the treatability study area. To evaluate the effectiveness of this remedy, water level data, groundwater samples, and potentially soil-gas samples would be collected from monitoring wells on a regular basis during the study, as described in Section 4.3.

© Copyright Locus Technologies, 1997-2016. All rights reserved.

3.4. Rationale for Selection

While groundwater extraction and treatment has been effective thus far, there has been a notable reduction in the rate of decrease of TCE, for example, since 2000, suggesting that TCE concentrations may be approaching asymptotic levels (Figure 16). As a result, many years may be required before remedial goals are attained using the existing treatment system.

Evaluation of EAB literature and treatment levels achieved at adjacent, geochemically-similar sites appear to indicate that EAB will be a more effective long-term remedial action to reduce the groundwater concentrations of chlorinated ethenes than continued groundwater extraction and treatment (AMEC, 2012; AECOM, 2012). Therefore, EAB is proposed for the treatability study at the 811 Arques source area.

3.5. Additional EAB Considerations

Groundwater samples were collected on 19 May 2009 for preliminary analysis of geochemical parameters that are useful in the evaluation of EAB through reductive dechlorination (Table 2). Based on these results, three characteristics of the geochemical environment have been identified that may act to reduce the effectiveness of EAB to reduce the concentrations of the target VOCs. The three characteristics – high sulfate concentrations, high Freon 113 concentrations, and relatively low DHC concentrations – are briefly discussed below.

3.5.1.Sulfate Concentrations

The primary electron acceptor at the site appears to be sulfate. The average of the three groundwater samples collected in May 2009 from wells S134A, S049A and S145A is 220 mg/L, with a maximum concentration of 330 mg/L (Table 2). Approximately 67.5% of the substrate will be required for sulfate reduction (Table 5). Although the presence of sulfate may reduce the rate of dechlorination, the measured levels are not likely to completely inhibit the reduction of the target chlorinated compounds.

© Copyright Locus Technologies, 1997-2016. All rights reserved.

3.5.2.Freon 113 Concentrations

While TCE and its daughter products can be biologically degraded, Freon 113 may prove difficult to biologically reduce. According to Figgins, et. al. (2007) biodegradation of TCE and by-products may be inhibited in the presence of Freon 113. Similarly to TCE, Freon 113 undergoes biotransformation processes with the addition of sufficient electron donors and bioaugmentation cultures, thus leading to the rapid exhaustion of substrate (Gray et al, 2014). The reduction of Freon 113 will not only compete for electron donors, but studies have shown the potential for accumulation of residual fluorinated carbon compounds from the biotransformation process (Balsinger et al, 2005). Rapid and effective degradation of Freon 113 and daughter products has been observed with the application of nano and micro scale zero valent irons in anaerobic systems (Lee et al, 2008). Emulsified zero valent iron substrate capable of degrading Freon 113 and daughter products will be implemented in a test area within the study area and is expected to limit the inhibitory effects of Freon 113 and prevent the emergence of foreign fluorinated carbon compounds into the aquifer.

3.5.3.DHC Concentrations

In general, DHC concentrations greater than 1×10^6 cells/L are considered optimum for the reductive dechlorination of TCE and other chlorinated VOCs. Baseline DHC population identified in May 2009 at wells S134A, S049A and S145A were 7.15×10^1 cells/mL, 8.92×10^2 cells/mL, and 1.19×10^2cells/mL, respectively (Table 2). Evidently, the potential for microbial dechlorination at the site is limited by the low population count. Optimal biological conditions will established by supplementing the EAB remedial technology with injections of DHC culture in addition to the selected organic substrates. Although, current biomass quantification methods do not distinguish between live and dead biomass, DHC key gene groups responsible for the dechlorination of VOCs can be characterized. The presence of DHC gene groups will be profiled and quantified during the course of the study as outlined in Section 4.3.

© Copyright Locus Technologies, 1997-2016. All rights reserved.

3.6. EAB Substrate Selection

Based on a careful evaluation of the remedial cost effectiveness of a range of commercially available substrates, the SRS®-SD substrate from Terra Systems stands out with several competitive advantages (Table 3). SRS®-SD is a slow release emulsified vegetable oil substrate, which is designed to combine both slow and fast release of electron donors and nutrients. While the fast release of electron donors is able to rapidly establish reducing anaerobic conditions, slow release of electron donors and nutrients can sustain long term biological activities. Typically, a single injection of SRS®-SD is known to last for 2 years without the need for replenishment. As a low viscosity liquid, SRS®-SD can be distributed over a substantial distance in relatively low permeability formations. It is expected to attain a radius of influence (ROI) of 10 ft using direct push technologies. In addition, SRS®-SD is priced competitively at a unit cost that is cheaper than the cost of most other substrates calculated based on recommended dosage from vendors. Based on these cost effective advantages, SRS®-SD is selected for implementation in this EAB pilot study. Terra Systems also provides SRS®-Z (a microscale iron-containing, viscous substrate capable of degrading Freon 113) and TSI-DC Bioaugmentation Culture for implementation in conjunction with SRS-SD. The application of SRS-Z will introduce a strong abiotic pathway for the destruction of VOCs and Freon 113. TSI-DC Bioaugmentation culture will supplement baseline microbial populations to support the biological degradation of VOCs. The synergistic effects of the selected technologies are expected to enhance the remedial performance of the EAB system.

© Copyright Locus Technologies, 1997-2016. All rights reserved.

4. Treatability Study Work Plan

4.1. Test Goals

This treatability study has several goals as a remedial design/remedial action (RD/RA) test. The goals are:

- Determine baseline geochemical conditions.
- Demonstrate the effectiveness of SRS®-SD to create a reducing geochemical environment as determined by the detection of dissolved metals, gases, and VOC's.
- Demonstrate the effectiveness of SRS®-SD and its co-application with TSI DC Bioaugmentation Culture to induce a biotic and abiotic anaerobic degradation of TCE to below baseline concentrations.
- Study the effectiveness of SRS-Z in removing Freon 113 and enhancing VOC degradation rates abiotically by comparing to VOC degradation rates in areas not influenced by the substrate.
- Determine the primary degradation pathway of TCE (biotic/abiotic) as demonstrated by evidence or absence of daughter products.
- Identify temporal limitations of SRS-SD and SRS-Z in maintaining highly reducing conditions at the treatability site.
- Identify the depletion rate of SRS-SD and SRS-Z over the remedial period as demonstrated by alkalinity, TOC, ORP, and volatile organic fatty acids in the pilot area.
- Gain information regarding the optimal in situ parameters (such as optimum substrate volumes, injection rates, number of applications, effective radius of influence, and optimal redox conditions) for use in developing a full-scale EAB program to remediate the impacted groundwater emanating from the source area.

The remedial activities in this study are limited to the plume within the "A" aquifer.

© Copyright Locus Technologies, 1997-2016. All rights reserved.

4.2. Experimental Design and Procedures

The treatability study will be conducted in an approximately 5,800 square foot area upgradient of, and including, the 811 East Arques extraction trench area (Figure 17). This area was selected because it is the area of highest TCE, cis-1,2-DCE, and Freon 113 concentrations at the 811 East Arques source area. A lithologic cross-section is presented in Figure 20.

Direct push injection of SRS-SD and TSI DC Bioaugmentation Culture into three injection points, each 10 ft upgradient of monitoring wells S138A, S139A, and S146A to enhance the distribution of the amendments and cost effectiveness of the treatability study (refer to Figure 17). The monitoring wells are intended to yield evidence of the ROI during and post injection. The required volume of SRS-SD will be determined using the ESTCP Substrate Design Tool with the best available geochemical and hydraulic values and most recent VOC concentrations (Table 4 and Table 5). Injection dosages are based on target ROI, interval depth, and the in-situ substrate concentration (refer to Section 4.2.2.1).

To evaluate and overcome the inhibitory effects of Freon 113 on TCE degradation, SRS-Z will be applied to a 100 sq-ft test area targeting the region with highest levels of Freon 113 within the treatment zone. The SRS-Z substrate and guar gum slurry will be prepared and applied using direct push via two injection points at a 10 ft radial distance upgradient of monitoring well S140A. The design volume of the product is based on the vendor's recommended iron to soil w/w ratio. The possibility of injecting closer to well S140A will be evaluated prior to implementation in anticipation of an expected ROI of 5.25 feet.

4.2.1. Pre-Field Activities

4.2.1.1. Site Access

Before any work begins, the schedule and logistics for conducting the field work, will be coordinated with the property owner.

© Copyright Locus Technologies, 1997-2016. All rights reserved.

4.2.1.2. Permits

The Santa Clara Valley Water District may interpret the direct push injection points to be temporary injection wells, which may require well permit(s). If required, well permits will be obtained from the Santa Clara Valley Water District prior to implementation. Additionally, a hydrant water meter permit will be obtained from the City of Sunnyvale, if hydrant water is used.

Based on 40 CFR 144, a UIC Permit is not needed for this treatability study, which entails substrate injection into Class V wells (wells used in experimental technologies). Additionally, the temporary injection points may not be considered "wells." However, the UIC Permit Director for EPA Region 9 will be contacted and provided an inventory prior to direct push injections. Inventory requirements are as follows, according to Section 144.26:

(1) Facility name and location;

(2) Name and address of legal contact;

(3) Ownership of facility;

(4) Nature and type of injection wells; and

(5) Operating status of injection wells.

The inventory may contain additional contents [Locus interpretation of "well" is "injection point" for this Treatability Study]: "a listing of all wells owned or operated setting forth the following information for each well. (A single description of wells at a single facility with substantially the same characteristics is applicable)."

(ii) Location of each well or project given by Township, Range, Section, and Quarter-Section, or by latitude and longitude to the nearest second, according to the conventional practice in the State;

(iii) Date of completion of each well;

(iv) Identification and depth of the formation(s) into which each well is injecting;

© Copyright Locus Technologies, 1997-2016. All rights reserved.

(v) Total depth of each well;

(vi) Casing and cementing record, tubing size, and depth of packer;

(vii) Nature of the injected fluids;

(viii) Average and maximum injection pressure at the wellhead;

(ix) Average and maximum injection rate; and

(x) Date of the last mechanical integrity test, if any.

4.2.1.3. Partial Shut Down of the Groundwater Extraction System

The existing groundwater extraction system at the 811 East Arques property will be shut down at least 48 hours prior to starting the treatability study and will remain so for the duration of the test to avoid extraction of the injected materials. Specifically, it is requested that EPA approve the temporary shut down of the following wells/trenches: S137A, S138A, S139A, S140A, S141A, S141B1, S142A, S143A, S144A, S145A, S146A, and 811T. Extraction pumps in the treatability study area will be removed. The extraction wells and trench at 440 North Wolfe Road and 815 Stewart Drive will continue to operate during the study period. These systems will maintain capture of the downgradient plume.

4.2.2.Field Activities, Equipment and Materials

4.2.2.1. Substrate Injection

For this treatability study, a single injection event is proposed. The event is anticipated to be completed in up to three days. The substrate SRS®-SD and TSI DC Bioaugmentation Culture will be delivered via direct push into three injection points located 10 ft upgradient of each of the extraction wells, S146A, S138A, and S139A (refer to Figure 17). The SRS-Z substrate will be applied using direct push via two injection points at a 10 ft radial distance upgradient of monitoring well S140A. Final injection locations will be determined following subsurface utility clearance.

© Copyright Locus Technologies, 1997-2016. All rights reserved.

Due to the clay content of the formation, a jettying tool tip will be used to achieve an approximate radius of influence (ROI) of 10 ft. Substrate delivery will be conducted in a top-down fashion in intervals of 2.5 ft from an initial depth of 10 ft bgs to an ending depth of 30 ft bgs Injection depth interval targets the source across the vertical depth of the "A" aquifer. In permeable regions injections will be delivered within a pressure range of 100-200 psi and flowrates at < 20 gpm, whereas, in regions dominated by clay content delivery pressure will range from 300-500 psi and flowrates from 20-30 gpm. Injection pressures will be adjusted based on pressure readings at pump head pressure gauge. The injection system monitoring components consist of flow meters, check valves, and pressure gauges.

The physical implementation of SRS-SD and TSI DC Bioaugmentation Culture, will proceed as follows:

- Install artesian well caps (or similar) at all wells within and nearby the treatability study area.
- If not completed in advance, collect 3,550 gallons of water (to attain 10% displacement of pore volume) from local hydrant in mixing tanks with secondary containment. As approved by the EPA, and if feasible given our oxidation-based treatment process, treated groundwater from the onsite treatment system will be used.
- Pitch sodium ascorbate into tank/s and recirculate until reduced conditions have been attained. The goal of conditioned water is to reach a dissolved oxygen level of less than 0.5 mg/L, -50 mV ORP, and <0.1 mg/L free chlorine. Delays to field operations may be prevented by gathering and conditioning water a day prior to injection event. Authorization from the EPA and/or Santa Clara Water Valley District will be obtained prior to the use of sodium ascorbate, as applicable; also refer to Section 4.2.1.2.
- Add ~412 gallons of Terra Systems SRS-SD emulsified vegetable oil concentrate to mixing tank with conditioned water. SRS®-SD will be shipped from Terra Systems in 55-gallon drums as a 60% by weight concentrate form.
- Blend 14 L TSI-DC bioaugmentation culture into SRS-SD mixing tank prior to injection.
- Inject 1/3 of the prepared SRS-SD and TSI-DC batch into one of the injection points upstream of monitoring well S138A, S139A, and S146A. Injection sequence will proceed from the outer

© Copyright Locus Technologies, 1997-2016. All rights reserved.

extent of the treatment area to the innermost to minimize plume migration outside the treatability area.

- Proceed with above injection process for the other two injection points designated for SRS-SD and TSI-DC cultures in a manner that maximize the distance between injections to allow water table to attenuate. Water levels will be monitored at wells S138A, S139A, S146A and S140A during and post injections using electric sounders.

The implementation of SRS-Z slurry will proceed as follows:

- Prepare ZVI slurry water by collecting approximately 650 gallons of water in mixing tank/s with secondary containment to attain 10% pore volume displacement and an ROI of 5.25 ft (5% overlap between injection points).
- Add 30 lbs of guar gum to slurry batch to improve the suspension and distribution of ZVI during injection.
- Mix 730 lbs of SRS-Z to attain 0.13% w/w iron to soil concentration, as recommended by vendor.
- Inject the equivalent of ½ of the ZVI slurry into each of the two injection points upstream of S140A at pressures of 500 psi to the breaking point of 700 psi until the viscous product has been completely introduced into the formation.

Upon completing each injection point, seal bores with a neat cement-bentonite grout containing up to 5% of bentonite by weight of cement used. Backfill using a tremie pipe to install grout from bottom of interval depth to 6 inches below surface. Complete borehole compatible with surface material and flush to grade. Mark injection location for surveying.

4.2.2.2. Monitoring of Injection Process

Backpressures will be monitored by observing pressures at the pump head at the beginning of injection, during injection, and post injection. The following observations and actions will be conducted during injections:

- If rapid decline in pressure is observed following a rapid initial pressure buildup, then the operator must stop immediately as daylighting may result.

© Copyright Locus Technologies, 1997-2016. All rights reserved.

- If the pressure drop is slow, the injection may continue at lower flow rates to prevent daylighting.
- If an increase in flow combined with a decrease in pressure is observed, this may indicate the formation has been fractured and flow rates must be adjusted down.

Daylighting prevention will also entail an assessment of the injection site prior to injection to identify potential daylighting conduits, paying close attention to pitched squeal in the pump's hydraulic system and visually inspecting the injection rods, hose bushings, and for substrate emergence on the surface of previously installed injection points.

Any evidence of daylighting will discontinue the injection process until the formation has equilibrated. Receptacles, filter socks, sorbent pads, and shop vac will be in place to capture emerging substrate. Safety data sheets of the substrates will be available onsite for control and contain guidance.

Where injection pressures in clay are not sufficient to deliver substrate, a secondary path will be identified requiring an initiation pressure of at least 700 psi at a specified depth. Where pressures exceed 1,000 psi the injection activities will be discontinued to inspect the tool for any damage. If no damage is observed pressures and flow rates will be adjusted to allow the aquifer to equilibrate.

4.2.2.3. Field Data Collection During Injection Process

During the injection process the following *in situ* parameters will be documented in field notes: equipment set up, sequence of water conditioning, substrate transfer methods, substrate volumes, chase water volumes, mixing systems, injection pressures and flowrates, observed injection thresholds, and any safety related issues. Additionally, the field measurements and observation shown in Table 6 will be recorded throughout the progress of the injection process to help assess the distribution of the substrates.

Throughout the treatability study, periodic visual inspections of groundwater samples in wells S049A, S138A, S137A, S139A, S143A, S146A, and S141A will be conducted to detect the presence of emulsion.

© Copyright Locus Technologies, 1997-2016. All rights reserved.

Breakthroughs will be logged and used to evaluate distribution patterns over time. The uniformity of propagation pattern will yield evidence of the radius of influence and potential channeling.

Additionally, groundwater samples will be subject to laboratory analyses as scheduled in the following section to evaluate the extent of the distribution zone, degradation rates of VOCs, subsurface conditions, and microbial activity.

4.3. Sampling and Analysis

In order to validate the effectiveness of biodegradation processes, a groundwater monitoring plan has been developed for the treatability study. The monitoring plan is designed to provide sufficient data to evaluate the effectiveness of the study and to provide the necessary information to plan a full-scale implementation of the technology if the treatability study is successful. Sampling data will be obtained from wells S049A, S134A, S138A, S137A, S139A, S143A, S146A, S140A, and S141A (Figure 17 and Table 7), which includes a downgradient, cross gradient, and upgradient well. Monitoring parameters will be used to evaluate the progress of the treatability study, as described in Table 8. Certain parameters may be removed from the sampling suite if information is not useful to evaluate system effectiveness.

Prior to the injection event, samples will be collected to establish geochemical and biological baseline conditions. Following the injection, geochemical parameters and VOCs will be sampled monthly for the first three months, then quarterly for three more periods. Biological analysis will be performed on a quarterly basis to quantify microbial populations. After reviewing the results, a subsequent sampling schedule may be developed. The initial study is expected to last one year.

The analytical data will be evaluated to monitor the progress of anaerobic biodegradation within, downgradient, and cross gradient of the treatment area and to determine whether any additional injections or bioaugmentation may be necessary. Supplementary screen point samples will be collected

© Copyright Locus Technologies, 1997-2016. All rights reserved.

using a Hydropunch or Geoprobe sampling tool at strategic locations when monitoring well data is insufficient to evaluate system performance.

Sampling will be performed according to established procedures with appropriate Quality Assurance/Quality Control (QA/QC) measures. Purged groundwater from the sampling event (3 well casing volumes from each well) will be disposed in the aboveground treatment system, if feasible, where it will be treated to remove VOCs, then discharged to surface water under an NPDES permit. Alternatively, refer to Section 4.6.

Groundwater samples will be submitted to Curtis & Tompkins, Ltd., of Berkeley, California. Curtis & Tompkins will complete all laboratory analyses, with the exception of dissolved gases, metabolic acids, hydrogen, carbon dioxide, and DHC analyses. Samples for the former four analytes will be submitted to Pace Analytical in Pittsburgh, PA. DHC analyses will be submitted to Microbial Insights, Inc. of Rockford, TN. All laboratories will follow industry-standard QA/QC procedures when completing the analyses.

4.3.1.Biogenic Methane Gas Monitoring

Given the proximity of existing buildings to the treatability study area, there appears to be no immediate risk to surrounding buildings as a result of excess methane production, if observed within the treatability study area. Given the proposed substrate and the addition of an iron-containing emulsion, it is also possible that methane production will be minimal. Treatability study findings will determine whether that is the case.

Methane is included in the analytical suite for pre-and post-injection well sampling. Methane monitoring methods are outlined in the QAPP. Based on analytical results, the screening levels and actions for soil gas methane are shown in Table 9.

© Copyright Locus Technologies, 1997-2016. All rights reserved.

4.4. Data Management

Data from both laboratory analyses and field measurements will be imported to and maintained in an electronic database. For the duration of the project, the database will be updated and maintained by Locus Technologies; thereafter, copies of data subsets or access to the entire database will be available as requested.

Sample information (location, date, time, etc.) will be entered into the electronic database from field logs and chain of custody documentation. Wherever possible, laboratory data will be received in an Electronic Data Deliverable (EDD) format directly from the laboratory to avoid potential transcription errors. Once received, the EDD will be uploaded into a holding table where it is checked for formatting and general data validation (quality control limits, consistency with chain of custody information, etc.). If the EDD fails any of the checks at this point, the error or discrepancy will be identified and either corrected or qualified depending on the severity of the error. No changes or corrections will be made to the EDD file itself without being reissued from the laboratory. Any validation qualifiers tagged onto the data set will identify the rationale for the qualifier and the person adding the qualifier. Wherever possible, re-analysis options should be examined to avoid applying qualifiers to the data set, since qualifiers may limit the usability of the data.

4.5. Data Analysis and Interpretation

In order to determine whether the RD/RA test goals are met (refer to Section 4.1), analytical data will be evaluated to determine:

- whether the data passed data validation (see Section 4.4); and, if so
- whether SRS®-SD created a reducing geochemical environment and its co-application with TSI-DC induce biotic and abiotic anaerobic degradation of TCE to below baseline concentrations; and, if so,

© Copyright Locus Technologies, 1997-2016. All rights reserved.

- whether SRS-Z in the test area promoted the degradation of Freon-113 and faster degradation of VOCs compared to the area not treated with the substrate; and, ultimately,
- optimal in situ parameters (such as substrate volumes, injection rates, number of applications, effective radius of influence) for use in developing a full-scale EAB program to remediate the impacted groundwater emanating from the former source area.

4.6. Residuals Management

Any waste generated on-site will be handled in accordance with all state, local, and federal regulations.

4.7. Community Relations

Refer to Section 4.2.1.1 for a description of site access activities. Technical support and input on EPA-lead community outreach materials will be provided.

4.8. Reports

Letter status reports documenting injection activities and treatability study results will be submitted to the EPA as follows:

- Quarterly status reports consisting of:
    1. Description of activities
    2. Laboratory reports of results
    3. Tabulation of water elevation and water quality results
    4. Concentration plots in monitoring wells.
- Treatability study evaluation report, submitted 90 days after receipt of results from the final sampling event. Report will include:
    5. Historical description of study activities
    6. A compilation of data collected during the study
    7. Concentration plots
    8. An evaluation of the results of the study

© Copyright Locus Technologies, 1997-2016. All rights reserved.

9. Should the study be successful, then a design for expanded implementation may be included. If the study is determined to be unsuccessful, recommendations for future actions will be included.

If necessary, reports may incorporate elements of Section 6.0 Data Evaluation and Reporting from the Air Force Center for Engineering and Environmental Science Division Protocol for In Situ Bioremediation of Chlorinated Solvents Using Edible Oil (AFCEE, 2007).

4.9. Schedule

The estimated project schedule is presented on Figure 18. The schedule assumes that the draft treatability study evaluation report will be completed approximately 1 year after baseline groundwater sampling and that sampling will be conducted monthly for the first 3 months and quarterly thereafter. However, results from monthly sampling events may provide justification for a longer sampling period and/or interval. The treatability study is expected to last one year.

4.10. Management and Staffing

The Project Team consists of the following main personnel:

Title	Name	Contact
Senior Project Manager	J. Wesley Hawthorne, P.E., P.G.	415-799-9937 hawthornej@locustec.com
Project Supervisor	Nancy-Jeanne LeFevre, P.E.	(415) 992-5360 LeFevren@locustec.com
Engineer	Linda Ocampo, E.I.T.	(415) 799-9964 ocampol@locustec.com

© Copyright Locus Technologies, 1997-2016. All rights reserved.

Additional staff is available from Locus to assist with implementation of the work plan. An organizational chart is shown in Figure 19, which identifies the responsibility for various aspects of the project.

4.11. Budget

The budget for implementation of this treatability study work plan is business-confidential.

© Copyright Locus Technologies, 1997-2016. All rights reserved.

References

AECOM, 2012, 2011 Annual Groundwater Monitoring Report, Former TRW Microwave Facility, 825 Stewart Drive, Sunnyvale, California, January.

AFCEE (Air Force Center for Engineering and Environmental), 2007, Protocol for In Situ Bioremediation of Chlorinated Solvents Using Edible Oil, prepared by Solutions- IES, Inc., Terra Systems, Inc. and Parsons Corp.

AMEC, 2012, Combined 2011 Annual Groundwater Monitoring and Annual In Situ Bioremediation Program Report, Former 901/902 Thompson Place, Sunnyvale, California, prepared for Advanced Micro Devices, Inc., 31 January.

Balsiger, Christian, Christoff Holliger, and Patrick Hohener, 2005, Reductive Dechlorination of Chlorofluorocarbons and Hydrochlorofluorocarbons in Sewage Sludge and Aquifer Sediment Microcosms. Elsevier, 17 Sep. 2004.

Dames & Moore, 1996, Five-Year Status Report and Remedial Effectiveness Evaluation, prepared for Philips Semiconductors, 13 September.

EPA, 1998, Technical Protocol for Evaluating Natural Attenuation of Chlorinated Solvents in Ground Water, Appendix B: Important Processes Affecting the Fate and Transport of Organic Compounds in the Subsurface. EPA Office of Research and Development, Washington, DC. EPA/600/R-98/128.

EPA, 2000, Data Quality Objectives Process for Hazardous Waste Site Investigations. EPA Office of Environmental Information, Washington DC. EPA/600/R-00/007.

Figgins, S., Bob Norris, B., and Goodrich, B., 2007, Competitive Inhibition of TCE Degradation by Freons Present in a Regional Plume, Paper H-33, in: A.R. Gavaskar and C.F. Silver (Symposium Chairs), In Situ and On-Site Bioremediation—2007. Proceedings of the Ninth International In Situ and On-Site Bioremediation Symposium (Baltimore, Maryland; May 7-10, 2007).

Gray, Doug, Peter Fairbanks, Jeff Roberts, Robert Casselberry, Ron Lantzy, and Edward Tokarsky, 2014, In Situ Remediation of Freon 113/Daughter Products Using a Combination of Emulsified Vegetable Oil and Engineered Bioaugmentation, Paper D-012, in: H.V. Rectanus and S.H. Rosansky (Chairs). Remediation of Chlorinated and Recalcitrant Compounds—2014. Ninth International Conference on Remediation of Chlorinated and Recalcitrant Compounds (Monterey, CA; May 2014).

Harding Lawson Associates, Engineering Science, Inc., EMCON, and Weiss Associates, 1991, Final Remedial Investigation Report, The Companies, Sunnyvale, California, 31 January.

© Copyright Locus Technologies, 1997-2016. All rights reserved.

In Situ Remediation Reagents Working Group, 2009, Susbsurface Injection of In Situ Remedial Reagents (ISSRs) Within the Los Angeles Regional Water Quality Control Board Jurisdiction, September 16, 2009.

Iwamura, 1980, Saltwater Intrusion Investigation in the Santa Clara County Baylands Area, California, Santa Clara Valley Water District, September.

Lee, M.D, Raymond, R.L, Fiorenza, S., and Shuetz, J.W., 2008, Treatability Studies Using EZVI and Bioaugmentation for Dissolved Phase and DNAPL Chlorinated Solvents, Paper F-046 in: Bruce M. Sass (Conference Chair), Remediation of Chlorinated and Recalcitrant Compounds—2008. Proceedings of the Sixth International Conference on Remediation of Chlorinated and Recalcitrant Compounds (Monterey, CA; May 2008).

Locus Technologies, 2001, Five-Year Status Report and Remedial Effectiveness Evaluation, 1996 to 2000, 811 East Arques Avenue, Sunnyvale, California, prepared for Philips Semiconductors, 18 June.

Locus Technologies, 2006, Five-Year Status Report and Remedial Effectiveness Evaluation, 2001 to 2005, 811 East Arques Avenue, Sunnyvale, California, prepared for Philips Semiconductors, 19 June.

Locus Technologies, 2011, Five-Year Status Report and Remedial Effectiveness Evaluation, 2006 to 2010, 811 East Arques Avenue, Sunnyvale, California, prepared for Philips Semiconductors, 17 June.

Regional Water Quality Control Board: San Francisco Bay Region, 1991. Site Cleanup Requirements and Rescission of Order No. 89-058 For: Signetics, Inc., 20 June.

© Copyright Locus Technologies, 1997-2016. All rights reserved.

Tables

© Copyright Locus Technologies, 1997-2016. All rights reserved.

Table 1. Aquifer Depths Below Ground Surface.

AQUIFER	DEPTH BELOW GROUND SURFACE (BGS)
"A"	10 – 30
"B1"	30 – 50
"B2"	50 – 70
"B3"	70 – 90

© Copyright Locus Technologies, 1997-2016. All rights reserved.

Table 2. May 2009 Baseline Sampling Analytical Results.

Well ID	Date Sampled	Target Analytes															
		CO_2 (µg/L)	Methane (µg/L)	Ethane (µg/L)	Ethene (µg/L)	H_2 (nM)	TOC (mg/L)	Nitrogen (mg/L)	Nitrate (mg/L)	Nitrite (mg/L)	Sulfate (mg/L)	Sulfide (mg/L)	Total Iron (mg/L)	Dissolved (ferrous) Iron (mg/L)	Chlo-ride (mg/L)	Alka-linity as $CaCO_3$ (mg/L)	DHC (cell/mL)
811 East Arques Source Area																	
Upgradient																	
134A	05/19/09	31	0.012	<0.005	<0.005	2.1	2.0	0.4	0.23	<0.05	150	<0.04	1.2	<0.1	120	420	7.15E+01
Plume Core																	
145A	05/19/09	30	<0.005	<0.005	<0.005	1.3	1.7	0.18	2.7	<0.05	180	<0.04	9.5	<0.1	100	390	1.19E+02
Downgradient																	
049A	05/19/09	39	<0.005	<0.005	<0.005	2.1	1.9	0.77	<0.05	<0.05	330	<0.04	3.4	<0.1	110	460	8.92+02

Notes:
µg/L – micrograms per liter
mg/L – milligrams per liter
nM – nanometers
TOC – total organic carbon

© Copyright Locus Technologies, 1997-2016. All rights reserved.

Table 3. Enhanced Anaerobic Bioremediation Substrate Comparison. (Next Page)

© Copyright Locus Technologies, 1997-2016. All rights reserved.

TABLE 3

COMPARISON OF SUBSTRATES FOR ENHANCED ANAEROBIC BIOREMEDIATION

811 EAST ARQUES AVENUE, SUNNYVALE, CALIFORNIA

Substrate	Description	System Configuration/ Implementability	Unit Price per lb.	Amount of Substrate Required	Total Material Cost	Pilot Test Area	Cost Per sq. ft.	Longevity	Key Advantages
EHC (PeroxyChem) (slow release substrate)	Combination of controlled-release carbon and zero valent iron (ZVI) particles used for stimulating in situ chemical reduction (ISCR). Redox potentials as low as –550 mV are commonly observed in groundwater after EHC application.	Direct mixing, hydraulic fracturing, pneumatic fracturing, injection of slurries or liquids, direct placement in trenches or excavations .	$2.50	5350 lb.	$ 13,375.00	60 ft. x 30 ft.	$ 7.43	12-60 months	Reduce sorption. Complete dechlorination of targeted compounds. Minimizes contaminant mobilization. No additional buffers required.
SRS (Terra Systems) (soluble and slow release substrate mix)	An emulsified vegetable oil substrate (60% vegetable oil) low viscosity liquid that combines slow and fast release electron donors and nutrients	Direct push (Geoprobe® or similar) drilling equipment or through installed wells.	$1.80	3560 lb.	$ 6,480.00	100 ft. x 100 ft.	$ 0.65	2-5 years	Distributed and immobilized over substantial distances in a range of aquifer materials; long lasting
HRC Regenesis (slow release substrate)	A polylactate ester that slowly degrades into lactic acid, which is fermented, producing hydrogen.	Push-point or borehole delivery methods.	$7	1770 lb.	$ 12,390.00	40 ft. x 40 ft.	$ 7.74	12-18 months	Slow release of donor, for more long-term effects. Long-term source of lactic acid/hydrogen to the subsurface. Controlled release of lactic acid to promote reducing conditions and produce hydrogen in 8 to 10 nM range. Single product application (for majority of sites)
3D Microemulsion (Regenesis) (soluble and slow release substrate mix)	Engineered electron donor material that offers a 3-stage electron donor release profile. The molecular structure of 3-D Microemulsion factory emulsified provides a hydrophile-lipophile balance (HLB) which enables maximum subsurface distribution.	Direct-push injection, hollow-stem auger, existing wells or re-injection wells.	3-D microemulsion: $3.50 HRC primer: $2.80	3-D microemulsion: 800 lb. HRC primer: 150 lb.	$ 3,220.00	20 ft. x 20 ft.	$ 8.05	3-4 years	Three stage; immediate, mid-range and long-term controlled-release of lactic, organic and fatty acids for the production of hydrogen. Maximum subsurface distribution through micellar transport.
WilClear (JRW Bioremediation) (soluble substrate)	This soluble sodium lactate concentrate degrades to volatile organic acids, which indigenous anaerobic bacteria ferment, producing hydrogen. Subsequent applications of WILCLEAR® would be required periodically to maintain a hydrogen source for anaerobic biodegradation.	Permanent injection wells or direct push technologies.	WilClear Plus: $1.68 BEA: $0.08	WilClear Plu: 4800 lb. BEA: 4800 lb.	$ 8,064.00	60 ft. x 60 ft.	$ 2.24	4-8 months	Miscibility in water and low viscosity allow for advective transport with groundwater; enhancing subsurface distribution and minimizing the number of injection points. Effective for both dissolved phase and DNAPL source area treatment.
LactOil (JRW Bioremediation) (slow release substrate)	This self-emulsifying vegetable oil emulsion is designed to provide an ongoing hydrogen source characteristic of slow-release carbon substrates while also being easily injectable and easily dispersed in the subsurface. Subsequent applications of LactOil™ would be required periodically to maintain a hydrogen source for anaerobic biodegradation.	Permanent injection wells. Direct push methods	LactOil-D: $2.04 Accelerite-L: $4.10	LactOil-D: 7200 lb. Accelerite-L: 184lb	$ 15,542.00	60 ft. x 60 ft.	$ 4.43	12-24 months	High organic content (80%) provides up to 25% more fermentables than standard emulsified vegetable oils. Low viscosity; readily mixes with water; no high shear mixing needed; low injection pressure; thermodynamically stable; good distribution of particles
Newman Zone Nonionic Buffered (RNAS) (soluble and slow release substrate mix)	An oil-in-water emulsion consisting of sub-micron droplets of uniform size. Newman Zone® is a blend of fast-release (sodium lactate) and slow-release (soybean oil) electron donors.	Direct push points, temporary injection wells or active recirculation systems	Newman Zone 190-6730 Emulsion: $1.8 Zloy: $20	Newman Zone 190-6730 Emulsion: 2880lb Zloy: 72 lb.	$ 5,184.00	60 ft. x 90 ft.	$ 0.96	2-5 years	Cheaper on a per pound basis and it has a greater hydrogen-release efficiency. Hence, the cost of multiple injections and the associated biofouling problems in wells are avoided.
EOS PRO (EOS Remediation) (slow release substrate)	A nutrient-enriched, DoD-validated, food-grade oil/water emulsion designed to quickly stimulate microbial activity while providing long-term nourishment to enhance anaerobic bioremediation of chlorinated solvents	Direct push technology or injection wells	$2.25	3360 lb.	$ 7,560.00	60 ft. x 60 ft.	$ 2.10	3-5 years	Includes bio stimulating vitamins and nutrients. Rapidly biodegradable substrates to "jump start" bacterial growth. Slow release biodegradable substrates to promote long-term biological activity. Neutral pH

Table 4. Substrate Design Tool Input. (Next Page)

© Copyright Locus Technologies, 1997-2016. All rights reserved.

Table 4 Input for Substrate Requirements in Hydrogen Equivalents

Site Name: Arques

RETURN TO COVER PAGE

NOTE: Unshaded boxes are user input.

1. Treatment Zone Physical Dimensions	Values	Range	Units	User Notes
Width (Perpendicular to predominant groundwater flow direction)	97	1-10,000	feet	
Length (Parallel to predominant groundwater flow)	60	1-1,000	feet	
Saturated Thickness	20	1-100	feet	
Treatment Zone Cross Sectional Area	1940	--	ft^2	
Treatment Zone Volume	116,400	--	ft^3	
Treatment Zone Total Pore Volume (total volume x total porosity)	391,907	--	gallons	
Treatment Zone Effective Pore Volume (total volume x effective por	357,071	--	gallons	
Design Period of Performance	1.0	.5 to 5	year	
Design Factor (times the electron acceptor hydrogen demand)	3.0	2 to 20	unitless	
2. Treatment Zone Hydrogeologic Properties				
Total Porosity	45%	.05-50	percent	Assumption based on effective porosity (45%)
Effective Porosity	41%	.05-50	percent	extraction from existing site data (41%)
Average Aquifer Hydraulic Conductivity	0.5	.01-1000	ft/day	Taken from Supplemental Subsurface Characterization report 1998
Average Hydraulic Gradient	0.015	0.0001-0.1	ft/ft	2014 Annual Report Aquifer "A" GW contours, assuming pumps are off
Average Groundwater Seepage Velocity through the Treatment Zone	0.02	--	ft/day	
Average Groundwater Seepage Velocity through the Treatment Zone	6.7	--	ft/yr	
Average Groundwater Discharge through the Treatment Zone	39,735	--	gallons/year	
Soil Bulk Density	1.56	1.4-2.0	gm/cm^3	Rule of thumb based on typical rock density: BD = (1 - pore space) x 2.65 g/cm^3
Soil Fraction Organic Carbon (foc)	0.05%	0.01-10	percent	Best available estimate
3. Native Electron Acceptors				
A. Aqueous-Phase Native Electron Acceptors				
Oxygen	5.0	0.01 to 10	mg/L	Best available estimate
Nitrate	2.70	0.1 to- 20	mg/L	2010 natural attenuation sampling results in Bioremediation/2011 work folder, Table 4
Sulfate	180	10 to 5,000	mg/L	2010 natural attenuation sampling results in Bioremediation/2011 work folder, Table 4 (180); quote (220)
Carbon Dioxide (estimated as the amount of Methane produced)	10.0	0.1 to 20	mg/L	Best available estimate
B. Solid-Phase Native Electron Acceptors				
Manganese (IV) (estimated as the amount of Mn (II) produced)	5	0.1 to 20	mg/L	Best available estimate
Iron (III) (estimated as the amount of Fe (II) produced)	50	0.1 to 20	mg/L	Best available estimate
4. Contaminant Electron Acceptors				
Tetrachloroethene (PCE)	0.032	--	mg/L	Average of May 2015 data for Wells S137A to S146A
Trichloroethene (TCE)	3.154	--	mg/L	Average of May 2015 data for Wells S137A to S146A
Dichloroethene (cis-DCE, trans-DCE, and 1,1-DCE)	2.991	--	mg/L	Average of May 2015 data for Wells S137A to S146A (cis-1,2-DCE only)
Vinyl Chloride (VC)	0.032	--	mg/L	Average of May 2015 data for Wells S137A to S146A (NDs = RLs)
Carbon Tetrachloride (CT)	0.000	--	mg/L	Average of May 2015 data for Wells S137A to S146A (all NDs)
Trichloromethane (or chloroform) (CF)	0.000	--	mg/L	Average of May 2015 data for Wells S137A to S146A (all NDs)
Dichloromethane (or methylene chloride) (MC)	0.000	--	mg/L	Average of May 2015 data for Wells S137A to S146A (all NDs)
Chloromethane	0.000	--	mg/L	Average of May 2015 data for Wells S137A to S146A (all NDs)
Tetrachloroethane (1,1,1,2-PCA and 1,1,2,2-PCA)	0.000	--	mg/L	Average of May 2015 data for Wells S137A to S146A (all NDs; no 1,1,1,2-PCA results available)
Trichloroethane (1,1,1-TCA and 1,1,2-TCA)	0.000	--	mg/L	Average of May 2015 data for Wells S137A to S146A (all NDs)
Dichloroethane (1,1-DCA and 1,2-DCA)	0.048	--	mg/L	Average of May 2015 data for Wells S137A to S146A (1,1-DCA only; 1,2-DCA are all NDs)
Chloroethane	0.000	--	mg/L	Average of May 2015 data for Wells S137A to S146A (all NDs)
Perchlorate	0.000	--	mg/L	Best available estimate
5. Aquifer Geochemistry (Optional Screening Parameters)				
A. Aqueous Geochemistry				
Oxidation-Reduction Potential (ORP)	100	-400 to +500	mV	Best available estimate
Temperature	19	5.0 to 30	ºC	Arques INF 8/12/2015
pH	7.0	4.0 to 10.0	su	Arques INF 8/12/2015
Alkalinity	390	10 to 1,000	mg/L	2010 natural attenuation sampling results in Bioremediation/2011 work folder, Table 4 (alkalinity as CaCO3)
Total Dissolved Solids (TDS, or salinity)	100	10 to 1,000	mg/L	Best available estimate
Specific Conductivity	1107	100 to 10,000	µs/cm	Arques INF 8/12/2015; 1 uS = 1 umhos
Chloride	100	10 to 10,000	mg/L	S145A 5/19/2009
Sulfide - Pre injection	0.0	0.1 to 100	mg/L	2010 natural attenuation sampling results in Bioremediation/2011 work folder, Table 4 (<0.04)
Sulfide - Post injection	0.1	0.1 to 100	mg/L	Best available estimate
B. Aquifer Matrix				
Total Iron	10000	200 to 20,000	mg/kg	Best available estimate
Cation Exchange Capacity	NA	1.0 to 10	meq/100 g	Best available estimate
Neutralization Potential	10.0%	1.0 to 100	Percent as $CaCO_3$	Best available estimate

NOTES:

Table 5. Substrate Design Tool Output. (Next Page)

© Copyright Locus Technologies, 1997-2016. All rights reserved.

Table 5 Output for Substrate Requirements in Hydrogen Equivalents

Site Name: Arques

RETURN TO COVER PAGE

1. Treatment Zone Physical Dimensions

	Values	Units	Values	Units
Width (perpendicular to groundwater flow)	97	feet	30	meters
Length (parallel to groundwater flow)	60	feet	18.3	meters
Saturated Thickness	20	feet	6.1	meters
Design Period of Performance	1	years	1	years

2. Treatment Zone Hydrogeologic Properties

	Values	Units	Values	Units
Total Porosity	0.45	percent	0.45	percent
Effective Porosity	0.41	percent	0.41	percent
Average Aquifer Hydraulic Conductivity	0.5	ft/day	1.8E-04	cm/sec
Average Hydraulic Gradient	0.015	ft/ft	0.015	m/m
Average Groundwater Seepage Velocity	0.02	ft/day	5.6E-01	cm/day
Average Groundwater Seepage Velocity	7	ft/yr	2.0	m/yr
Effective Treatment Zone Pore Volume	357,071	gallons	1,351,623	liters
Groundwater Flux (per year)	39,735	gallons/year	150,409	liters/year
Total Groundwater Volume Treated (over entire design period)	396,806	gallons total	1,502,032	liters total

3. Distribution of Electron Acceptor Demand

	Percent of Total	Hydrogen Demand (lb)
Aerobic Respiration	2.8%	2.085
Nitrate Reduction	1.0%	0.741
Sulfate Reduction	67.5%	50.043
Manganese Reduction	0.8%	0.608
Iron Reduction	4.0%	2.988
Methanogenesis	22.4%	16.639
Dechlorination	1.4%	1.030
Perchlorate Reduction	0.0%	0.000
Totals:	**100.00%**	**74.13**

Hydrogen demand in pounds/gallon:	1.87E-04
Hydrogen demand in grams per liter:	2.24E-02

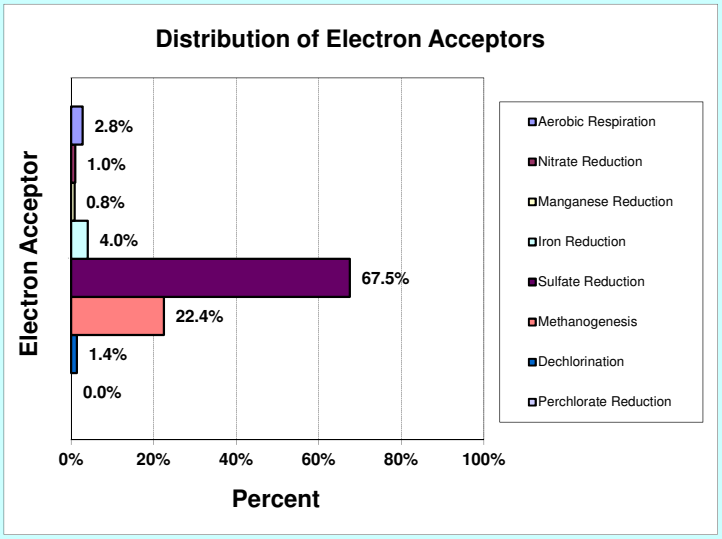

4. Substrate Equivalents: Design Factor = 3.0

Product	Quantity (lb)	Quantity (gallons)	Effective Concentration (mg/L)	Effective concentration is for total volume of groundwater treated.
1. Sodium Lactate Product	10,309	937	1,501	as lactic acid
2. Molasses Product	7,867	656	1,425	as sucrose
3. Fructose Product	6,212	555	1,501	as fructose
4. Ethanol Product	3,176	460	767	as ethanol
5. Sweet Dry Whey (lactose)	4,900	sold by pound	1,036	as lactose
6. HRC®	3,767	sold by pound	910	as 40% lactic acid/40% glycerol
7. Linoleic Acid (Soybean Oil)	1,934	248	584	as soybean oil
8. Emulsified Vegetable Oil	3,223	413	584	as soybean oil

Notes:

1. Quantity assumes product is 60% sodium lactate by weight.
2. Quantity assumes product is 60% sucrose by weight and weighs 12 pounds per gallon.
3. Quantity assumes product is 80% fructose by weight and weighs 11.2 pounds per gallon.
4. Quantity assumes product is 80% ethanol by weight and weighs 6.9 pounds per gallon.
5. Quantity assumes product is 70% lactose by weight.
6. Quantity assumes HRC® is 40% lactic acid and 40% glycerol by weight.
7. Quantity of neat soybean oil, corn oil, or canola oil.
8. Quantity assumes commercial product is 60% soybean oil by weight.

Table 6. Field Monitoring Parameters During Injection Process.

MEASUREMENT	EQUIPMENT	MONITORING OBJECTIVES
Groundwater levels	Electric sounder	Indicator of potential mounding or changes in levels during injection. Water levels will help assess the distribution of the amendments and the need to reduce flow or discontinue injection.
Pressures	Gauges or transducers	Measure injection backpressures. Drilling subcontractor will provide pressure monitoring devices.
Flow rates and volumes	Flowmeters	Measure injection loadings. Drilling subcontractor will provide pressure monitoring devices.
Groundwater quality (DO, ORP, pH, conductivity)	Multi-function meter	Serve as an indirect indicator of substrate distribution and direct indictor of reducing conditions. Will be used to determine reducing conditions of the anaerobic chase water and at monitoring wells to determine the extent of the anaerobic region.
TOC	Hand colorimeter	Employed to yield evidence of the distribution extent of vegetable oil substrate in downstream monitoring well.
Metal concentration	Hand colorimeter	Evaluate the mobilization of metals in downstream monitoring well, such as iron, during injections

© Copyright Locus Technologies, 1997-2016. All rights reserved.

MEASUREMENT	EQUIPMENT	MONITORING OBJECTIVES
Soil gas and well vapors	PID or FID	Monitor potential off gassing of VOCs and methane near injection points
Reagent and substrate concentrations	Hand colorimeter	Detect breakthroughs at monitoring wells.
Visual observations	Visual sample inspection	Inspect color change and/or consistency of groundwater for evidence of breakthough. Daylighting of substrates within and outside the treatment area
ZVI distribution	Ceramic magnet	Qualitative method to detect the presence of ZVI in downstream well.

© Copyright Locus Technologies, 1997-2016. All rights reserved.

Table 7. Baseline and Post-Injection Groundwater Sampling Frequency, Analysis, and Field Measurements Planned for Selected Monitoring Wells in the Arques Treatability Area

Sampling Wells	Sampling Frequency	Sample Analysis – Analytical Method	Field Measurements
S049A S134A S138A S137A S139A S143A S146A S140A S141A	<u>Baseline</u> VOCs, Geochemical, and Biological <u>Monthly (post-injection)</u> Month (1-3): VOCs and Geochemical parameters <u>Quarterly (post-injection)</u> Quarter (1-4): Biological Quarter (2-4): VOCs and Geochemical parameters	Chlorinated VOCs (eight COCs plus PCE) – EPA 8260 Nitrate and Sulfate – EPA 300.0 Alkalinity (as CaCO3) – SM2320B Dissolved Metals (Manganese, Arsenic, Iron) – HACH or EPA 200.7 TOC – SM5310C Sulfide – SM4500 Methane, Ethane, Ethene – RSK175 Metabolic Acids (lactic, pyruvic, acetic, propionic, and butyric)or Volatile Fatty Acids (VFA) – AM23G Hydrogen – AM20GAX Carbon Dioxide – AM20GAX Dechlorinating Bacteria (DHC) – CENSUS	pH Specific Conductance Temperature Dissolved Oxygen (DO) Oxidation-Reduction Potential (ORP) Water Level Measurements

© Copyright Locus Technologies, 1997-2016. All rights reserved.

Table 8. Parameters Sampled and Their Indications for Treatability Study Progress.

PARAMETER	METHOD	DATA USE AND INDICATIONS
Chlorinated VOCs (eight COCs plus PCE); tetrachloroethene (PCE), trichloroethene (TCE), 1,1,1-trichloroethane, 1,1,2-trichloro-1,2,2-trifluoroethane (Freon 113), cis-1,2-dichloroethene (cis-DCE), trans-1,2-dichloroethene, 1,1-dichloroethane, 1,1-dichloroethene, and vinyl chloride (VC)	EPA 8260	Data used to determine success of remedial system. Concentration of parent and daughter compounds will indicate whether environment is supportive of dechlorination. Additionally, all eight chemicals of concern will be useful in the long-term evaluation of site cleanup through bioremediation.
Nitrate	EPA 300.0	An alternate electron acceptor under anaerobic conditions. Depleting values will yield evidence of a reduced environment supportive of microbial activity.
Sulfate	EPA 300.0	An alternate electron acceptor under anaerobic conditions. Sulfate levels will give insight on the reducing conditions of the environment and degradation phase.
Alkalinity (as CaCO3)	SM2320B	Indicator of buffering capacity of aquifer and biodegradation. At levels below background and pH < 5 indicates that a buffering agent will be required.

© Copyright Locus Technologies, 1997-2016. All rights reserved.

PARAMETER	METHOD	DATA USE AND INDICATIONS
Dissolved iron and manganese	HACH or EPA 200.7	Alternate electron acceptors under anaerobic conditions. Increasing levels of ferrous iron and dissolved manganese and depleted levels of nitrate indicate reducing conditions exists. Increasing levels of ferrous iron and dissolved manganese also indicate mobilization.
Dissolved arsenic	EPA 200.7	Increasing levels of dissolved arsenic indicate mobilization.
TOC	SM5310C	Indicator of organic carbon present at the site. Evaluation of the parameter will yield total organic carbon content at site during baseline sampling and extent of substrate distribution and availability following the injection of substrates.
Sulfide	SM4500	Stand-by performance indicator. Compound will be evaluated when sulfate levels are >20 mg/L. High levels of sulfide can be toxic to microbial cultures.
Methane, Ethane, Ethene	RSK-175	Methane is an alternate electron acceptor under anaerobic conditions. Increasing methane levels indicate methanogenesis is occurring, phase precursor to VOC degradation. Increasing levels of ethene indicate conditions are conducive to the dechlorination of VOCs.

© Copyright Locus Technologies, 1997-2016. All rights reserved.

PARAMETER	METHOD	DATA USE AND INDICATIONS
Metabolic Acids (lactic, pyruvic, acetic, propionic, and butyric) or Volatile Fatty Acids (VFA)	AM23G	Indicator of the distribution extent of the substrate in the subsurface. Elevated concentrations (> 20 mg/L) indicate environment is conducive to anaerobic dechlorination.
Hydrogen	AM20GAX	Primary electron donor produced by fermentation processes. Levels < 2 nM/L may indicate that additional substrate may be required if TOC levels are depleted.
Carbon Dioxide	AM20GAX	Product of anaerobic degradation. Increasing levels indicate microbial activity and potential increase in methane.
Dechlorinating Bacteria (DHC)	CENSUS	Enumeration of DHC strains. Cell count > 10^6 per liter and presence of daughter compounds suggest environment is supportive of biodegradation.
pH	Field Measurement	Biological activity is dependent on pH levels in treatment area. A range of 5-9 supports reductive dechlorination; however, a range closer to neutral (6-8) is ideal for microbial activity. Buffering agents will be used if levels are detected below 5.

© Copyright Locus Technologies, 1997-2016. All rights reserved.

PARAMETER	METHOD	DATA USE AND INDICATIONS
Specific Conductance	Field Measurement	General water quality parameter. Used to determine well purge stabilization and as an additional line of evidence for substrate distribution. An increase in conductance may yield evidence of the presence of the substrate at sampling location.
Temperature	Field Measurement	General water quality parameter. Can be evaluated to determine well purge stabilization and as a limiting factor in microbial growth inhibitor; at < 4 degrees Celsius may limit microbial growth and > 35 Celsius will inhibit DHC.
Dissolved Oxygen (DO)	Field Measurement	Indicator of the extent of reducing or oxidizing conditions in subsurface. DO levels should be depleted to a level of < 0.5 mg/L to establish an anaerobic degradation pathway.
Oxidation-Reduction Potential	Field Measurement	Indicator of the extent of existing reducing conditions. ORP levels < -50mV indicates reducing conditions exists.
Water Level Measurements	Field Measurement	Indicator of potential mounding or changes in groundwater water levels during injection. Water levels will help assess the distribution of the amendments and the need to reduce flow or discontinue injection.

© Copyright Locus Technologies, 1997-2016. All rights reserved.

Table 9. Screening levels and Actions for Soil Gas Methane.

Sampled Medium in Treatability Study	Methane Concentration	Action
Groundwater	> 10 mg/L	Monitor soil gas in proximity of the >10 mg/L readings during subsequent sampling events.
Soil Gas	> 10% of LEL (5,000 ppm) (3,300 mg/m3)	Evaluate results and preventative measures (e.g. attenuation, effects of iron availability). If necessary based on findings, prepare for the full-scale implementation, a Methane Contingency Plan detailing evaluation criteria and approaches for soil gas monitoring and mitigation.

Methane LEL = 50,000 ppm; 1ppm = 0.66 mg/m^3 at 25 deg C, 1 atm

© Copyright Locus Technologies, 1997-2016. All rights reserved.

Figures

© Copyright Locus Technologies, 1997-2016. All rights reserved.

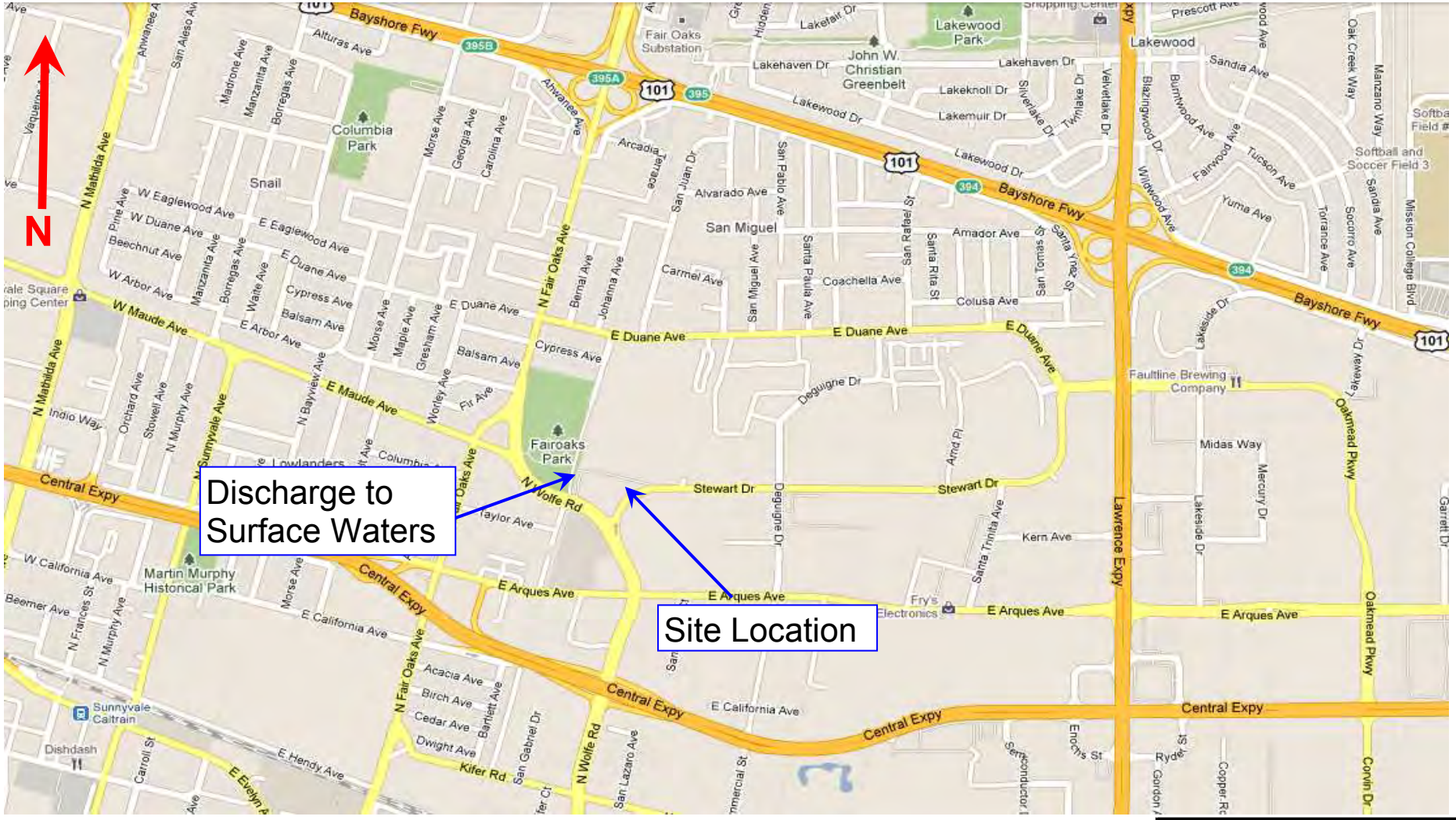

Figure 1

Site Location Map
Arques Site
440 North Wolfe Road
Sunnyvale, California

Locus TECHNOLOGIES

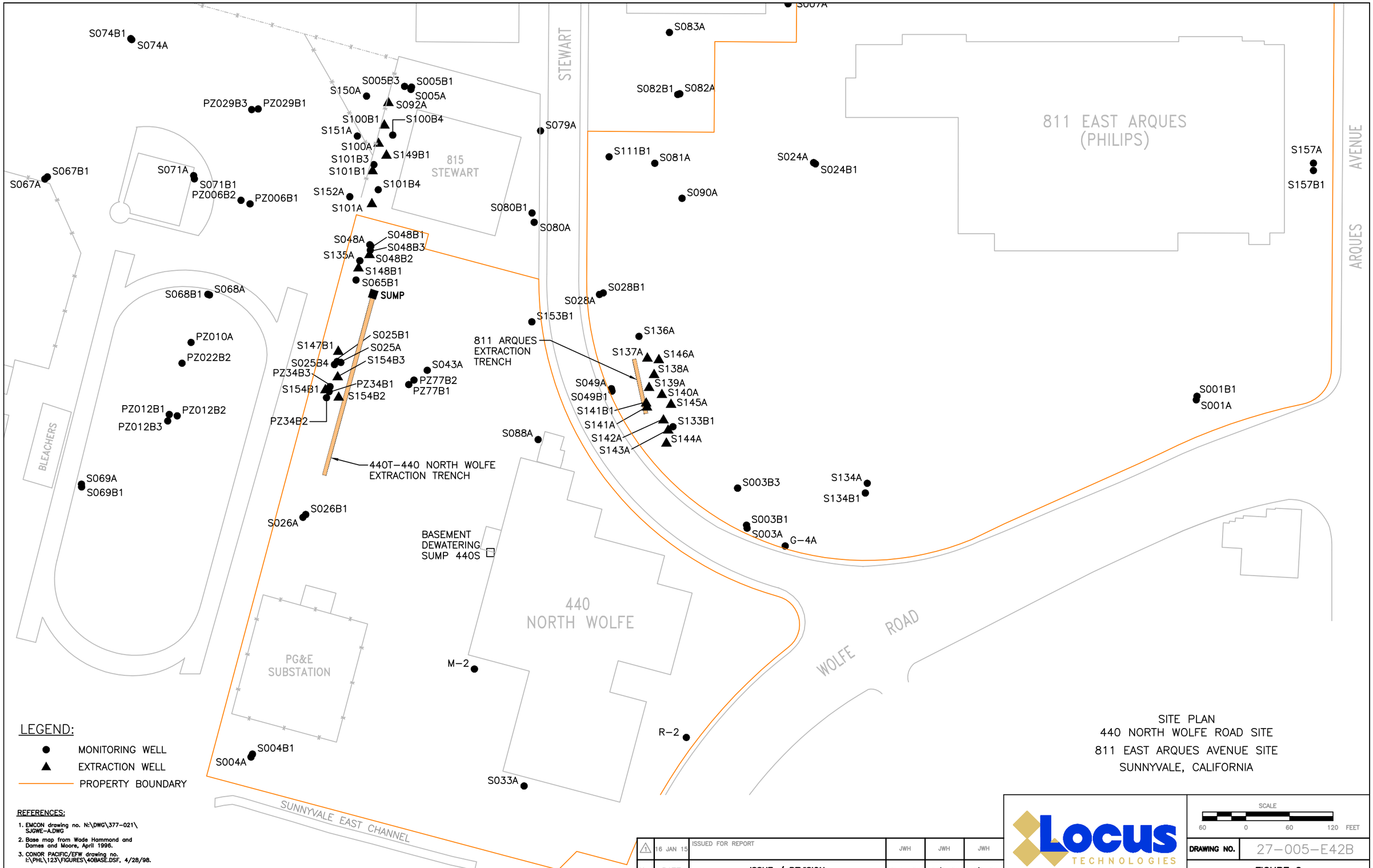

LEGEND:

- ● MONITORING WELL
- ▲ EXTRACTION WELL
- PROPERTY BOUNDARY

REFERENCES:

1. EMCON drawing no. N:\DWG\377–021\SJGWE–A.DWG
2. Base map from Wade Hammond and Dames and Moore, April 1996.
3. CONOR PACIFIC/EFW drawing no. I:\PHL\123\FIGURES\40BASE.DSF, 4/28/98.

SITE PLAN
440 NORTH WOLFE ROAD SITE
811 EAST ARQUES AVENUE SITE
SUNNYVALE, CALIFORNIA

No.	DATE	ISSUE / REVISION	DWN. BY	CK'D BY	AP'D BY
1	16 JAN 15	ISSUED FOR REPORT	JWH	JWH	JWH

Locus TECHNOLOGIES

SCALE: 60 0 60 120 FEET

DRAWING NO. 27–005–E42B

FIGURE 2

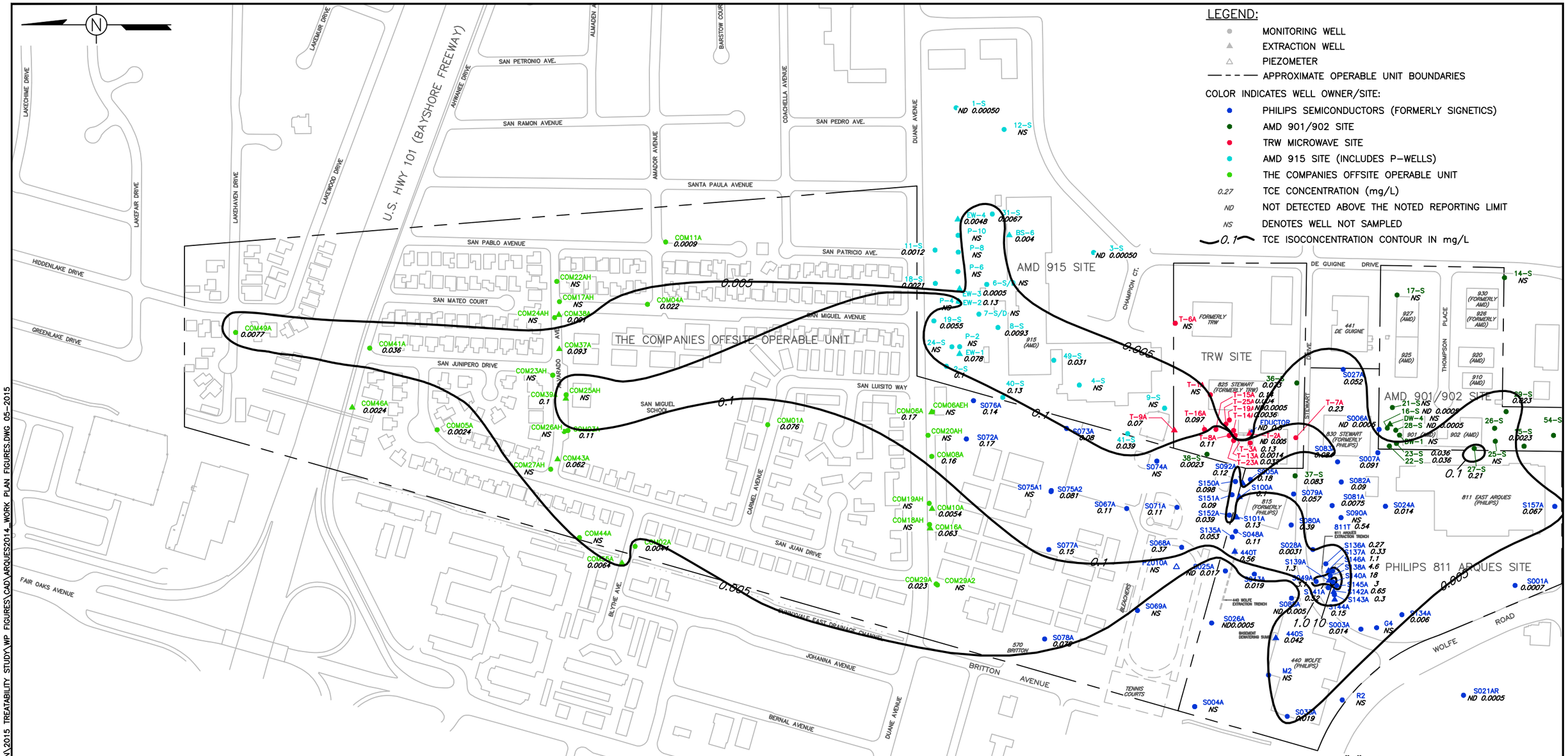

"A" AQUIFER
TCE CONCENTRATION CONTOURS
FOURTH QUARTER 2014
811 EAST ARQUES AVENUE SITE
SUNNYVALE, CALIFORNIA

REFERENCES:

1. BASE MAP FROM KIER AND WRIGHT, NOVEMBER 1997.
2. EMCON DRAWING NO. EXGWE-A, FEBRUARY 1998.

No.	DATE	ISSUE / REVISION	DWN. BY	CK'D BY	AP'D BY
1	16 JAN 15	ISSUED FOR REPORT	TH	JWH	JWH

Locus TECHNOLOGIES

0 400 800
APPROXIMATE SCALE IN FEET

DRAWING NO. 27-005-B439

FIGURE 3

FILE NAME: I:\PROJECTS\P\PHILIPS\ARQUES\BIOREMEDIATION\2015 TREATABILITY STUDY\WP FIGURES\CAD\ARQUES2014_WORK PLAN FIGURES.DWG 05-2015

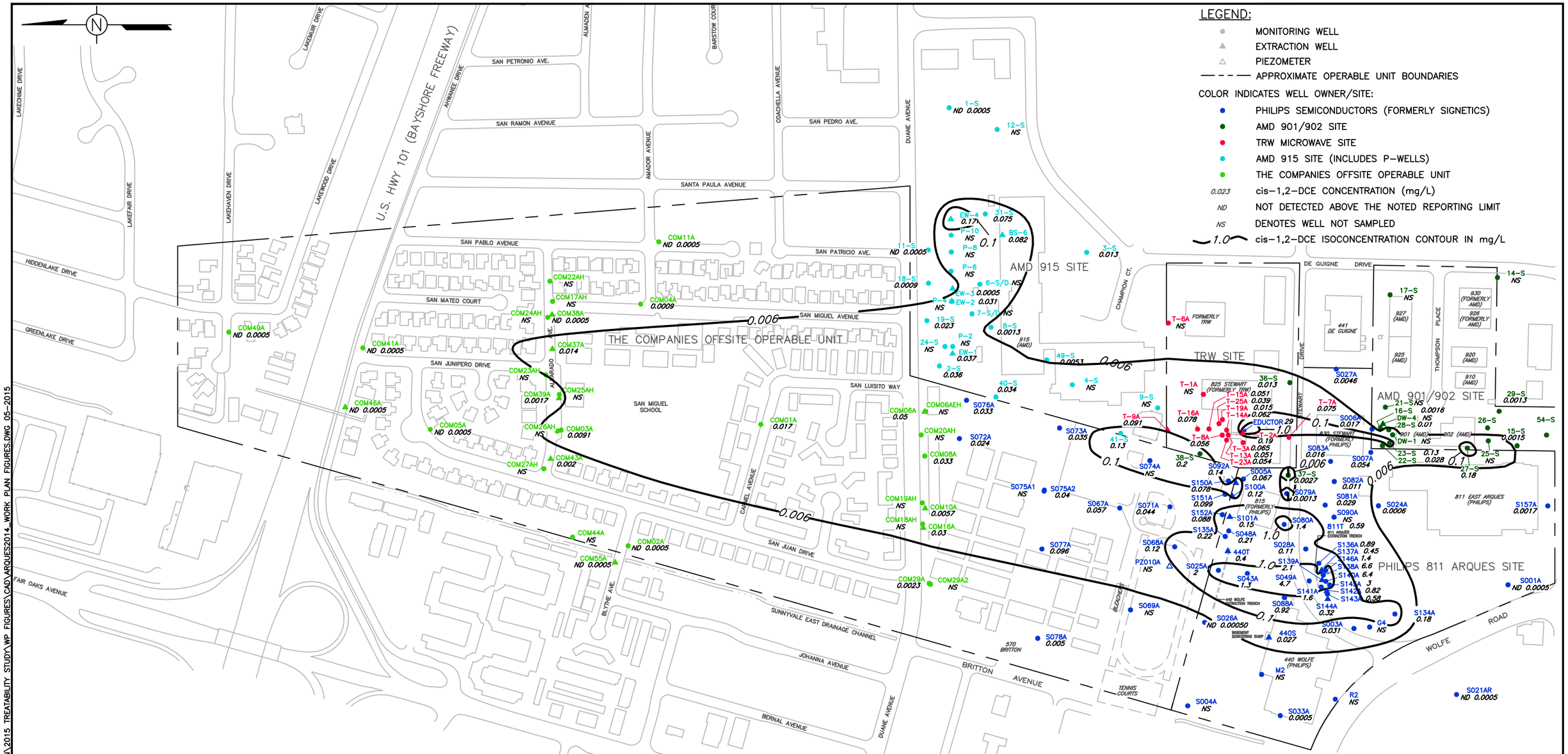

"A" AQUIFER
cis-1,2-DCE CONCENTRATION CONTOURS
FOURTH QUARTER 2014
811 EAST ARQUES AVENUE SITE
SUNNYVALE, CALIFORNIA

REFERENCES:

1. BASE MAP FROM KIER AND WRIGHT, NOVEMBER 1997.
2. EMCON DRAWING NO. EXGWE-A, FEBRUARY 1998.

No.	DATE	ISSUE / REVISION	DWN. BY	CK'D BY	AP'D BY
1	16 JAN 15	ISSUED FOR REPORT	TH	JWH	JWH

Locus TECHNOLOGIES

0 400 800
APPROXIMATE SCALE IN FEET

DRAWING NO. 27-005-B440

FIGURE 4

FILE NAME: I:\PROJECTS\P\PHILIPS\ARQUES\BIOREMEDIATION\2015 TREATABILITY STUDY\WP FIGURES\CAD\ARQUES2014_WORK PLAN FIGURES.DWG 05-2015

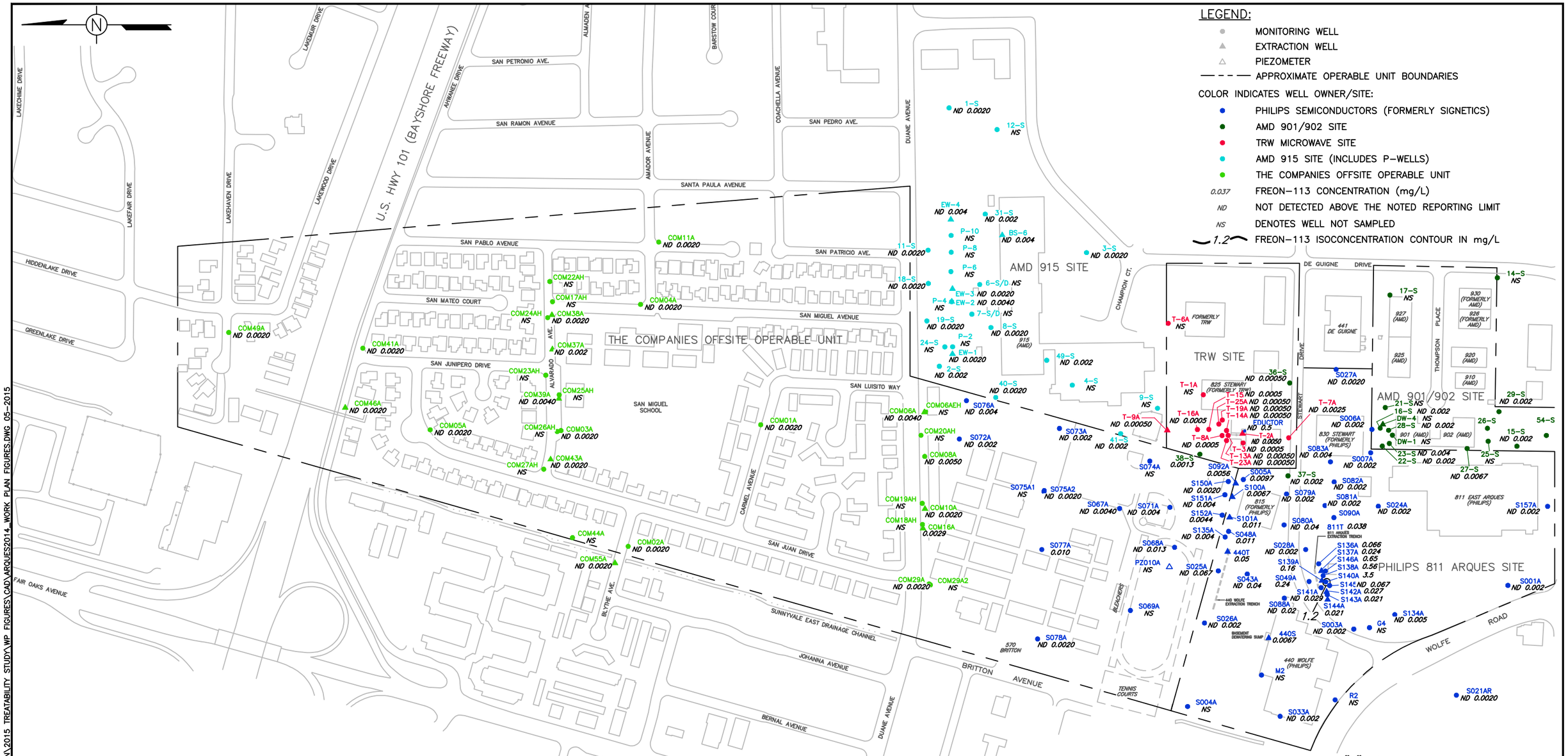

REFERENCES:

1. BASE MAP FROM KIER AND WRIGHT, NOVEMBER 1997.
2. EMCON DRAWING NO. EXGWE-A, FEBRUARY 1998.

No.	DATE	ISSUE / REVISION	DWN. BY	CK'D BY	AP'D BY
1	16 JAN 15	ISSUED FOR REPORT	TH	JWH	JWH

Locus TECHNOLOGIES

DRAWING NO. 27-005-B441

FIGURE 5

FILE NAME: I:\PROJECTS\P\PHILIPS\ARQUES\BIOREMEDIATION\2015 TREATABILITY STUDY\WP FIGURES\CAD\ARQUES2014_WORK PLAN FIGURES.DWG 05-2015

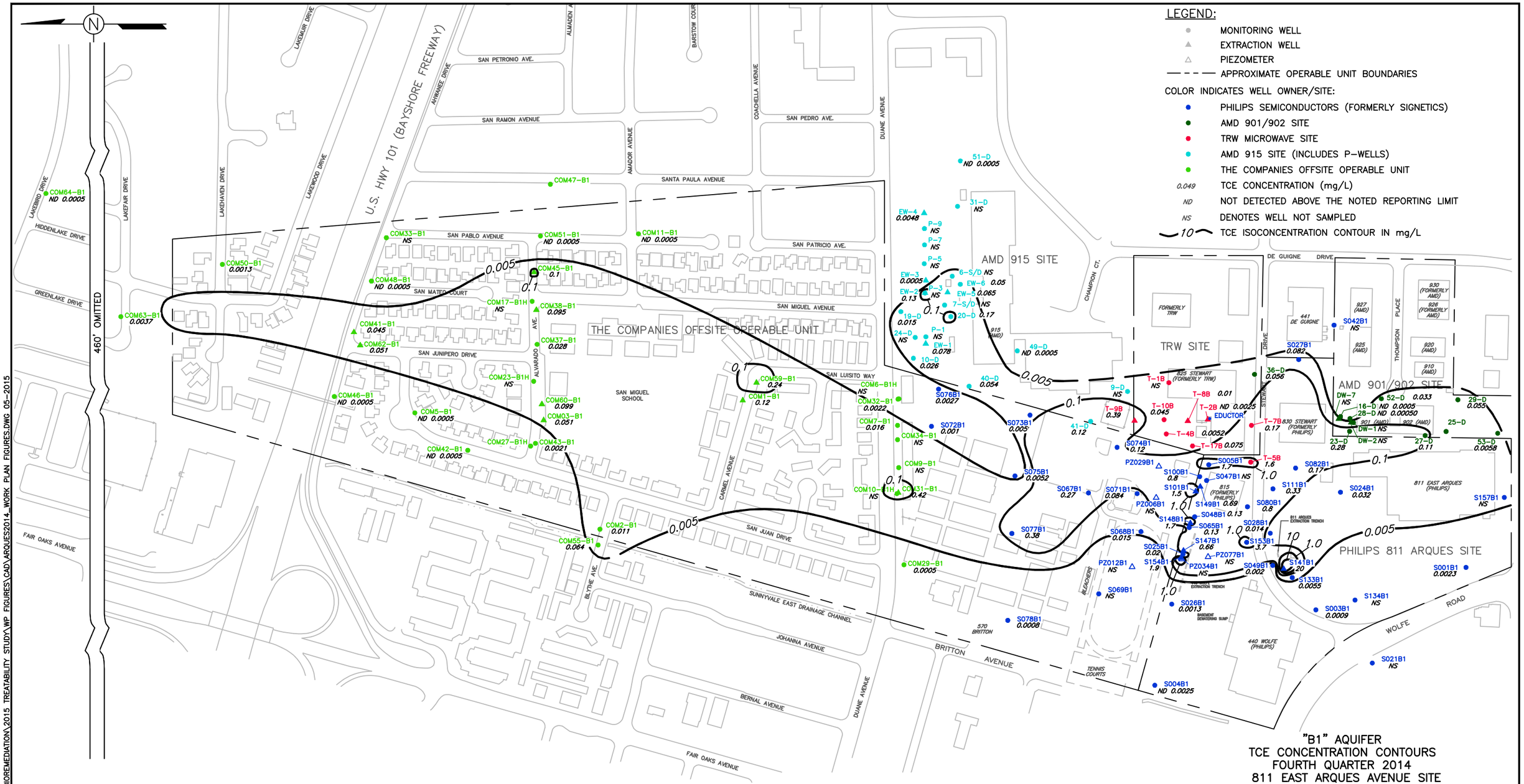

"B1" AQUIFER
TCE CONCENTRATION CONTOURS
FOURTH QUARTER 2014
811 EAST ARQUES AVENUE SITE
SUNNYVALE, CALIFORNIA

REFERENCES:

1. BASE MAP FROM KIER AND WRIGHT, NOVEMBER 1997.
2. EMCON DRAWING NO. EXGWE-A, FEBRUARY 1998.

No.	DATE	ISSUE / REVISION	DWN. BY	CK'D BY	AP'D BY
1	15 JAN 16	ISSUED FOR REPORT	TH	JWH	JWH

Locus TECHNOLOGIES

0 400 800
APPROXIMATE SCALE IN FEET

DRAWING NO. 27-005-B442

FIGURE 6

FILE NAME: I:\PROJECTS\P\PHILIPS\ARQUES\BIOREMEDIATION\2015 TREATABILITY STUDY\WP FIGURES\CAD\ARQUES2014_WORK PLAN FIGURES.DWG 05-2015

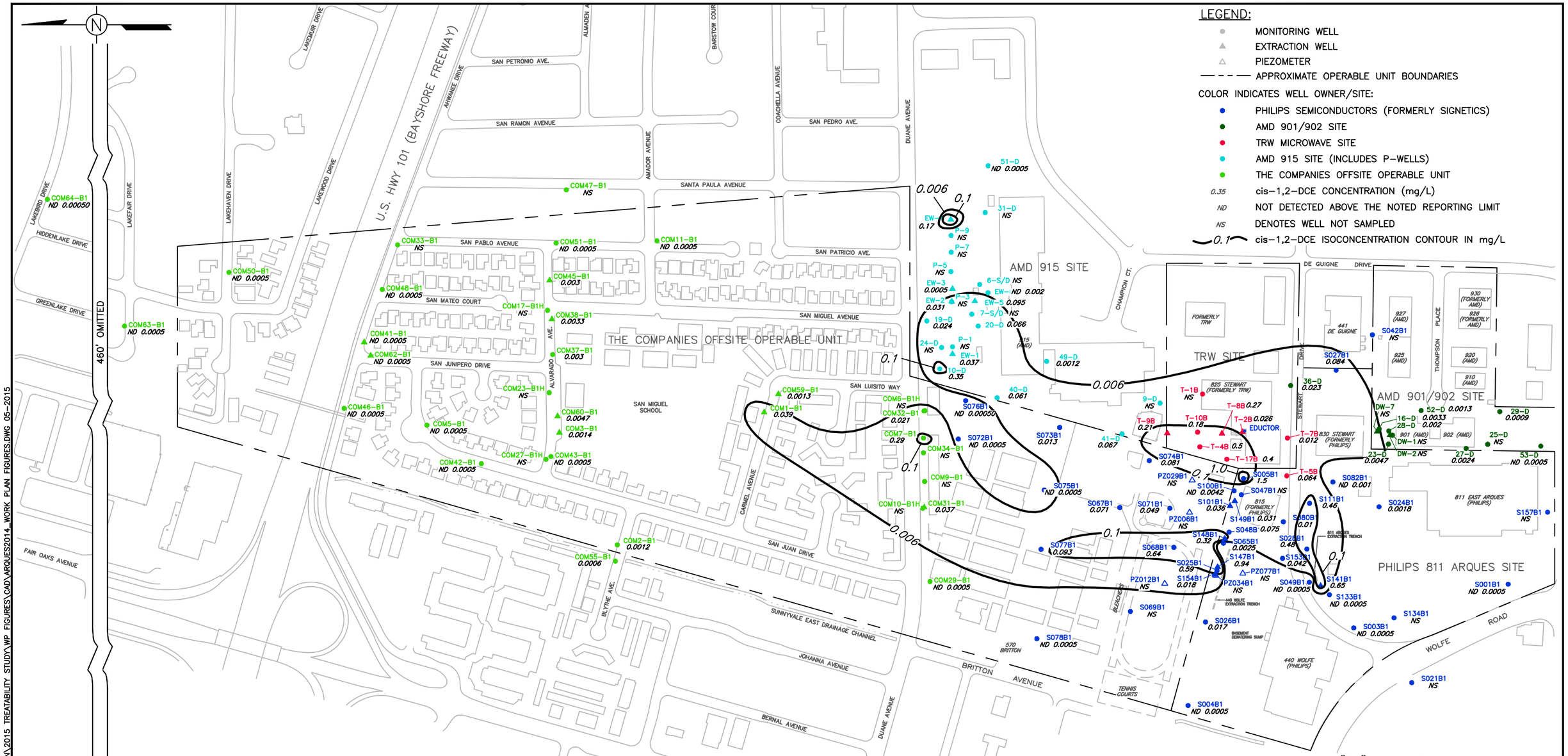

"B1" AQUIFER
cis-1,2-DCE CONCENTRATION CONTOURS
FOURTH QUARTER 2014
811 EAST ARQUES AVENUE SITE
SUNNYVALE, CALIFORNIA

REFERENCES:

1. BASE MAP FROM KIER AND WRIGHT, NOVEMBER 1997.
2. EMCON DRAWING NO. EXGWE-A, FEBRUARY 1998.

No.	DATE	ISSUE / REVISION	DWN. BY	CK'D BY	AP'D BY
1	16 JAN 15	ISSUED FOR REPORT	TH	JWH	JWH

Locus TECHNOLOGIES

0 400 800
APPROXIMATE SCALE IN FEET

DRAWING NO. 27-005-B443

FIGURE 7

FILE NAME: I:\PROJECTS\P\PHILIPS\ARQUES\BIOREMEDIATION\2015 TREATABILITY STUDY\WP FIGURES\CAD\ARQUES2014 WORK PLAN FIGURES.DWG 05-2015

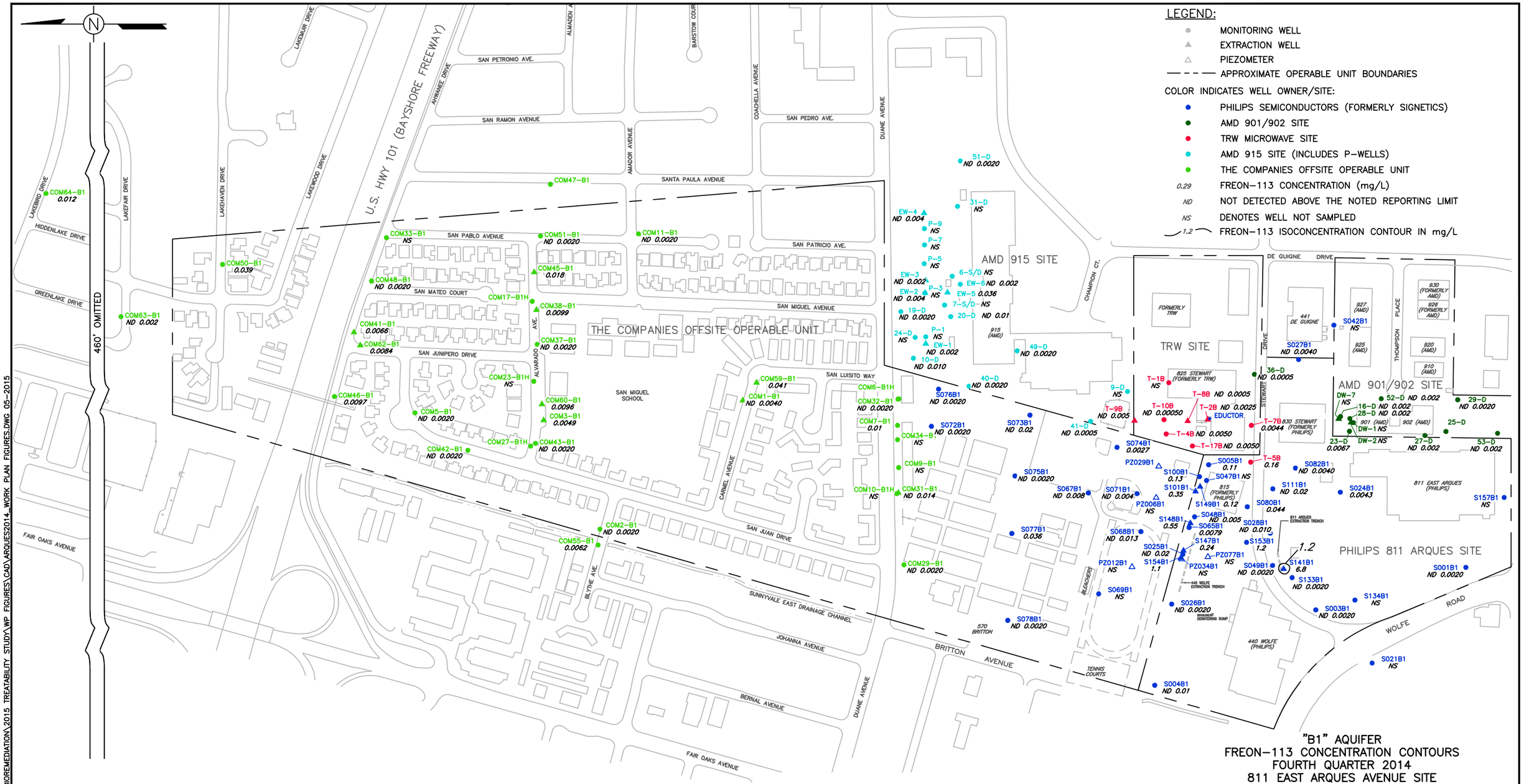

"B1" AQUIFER
FREON-113 CONCENTRATION CONTOURS
FOURTH QUARTER 2014
811 EAST ARQUES AVENUE SITE
SUNNYVALE, CALIFORNIA

REFERENCES:

1. BASE MAP FROM KIER AND WRIGHT, NOVEMBER 1997.
2. EMCON DRAWING NO. EXGWE-A, FEBRUARY 1998.

No.	DATE	ISSUE / REVISION	DWN. BY	CK'D BY	AP'D BY
1	16 JAN 15	ISSUED FOR REPORT	TH	JWH	JWH

Locus TECHNOLOGIES

0 400 800
APPROXIMATE SCALE IN FEET

DRAWING NO. 27-005-B444

FIGURE 8

FILE NAME: I:\PROJECTS\P\PHILIPS\ARQUES\BIOREMEDIATION\2015 TREATABILITY STUDY\WP FIGURES\CAD\ARQUES2014_WORK PLAN FIGURES.DWG 05-2015

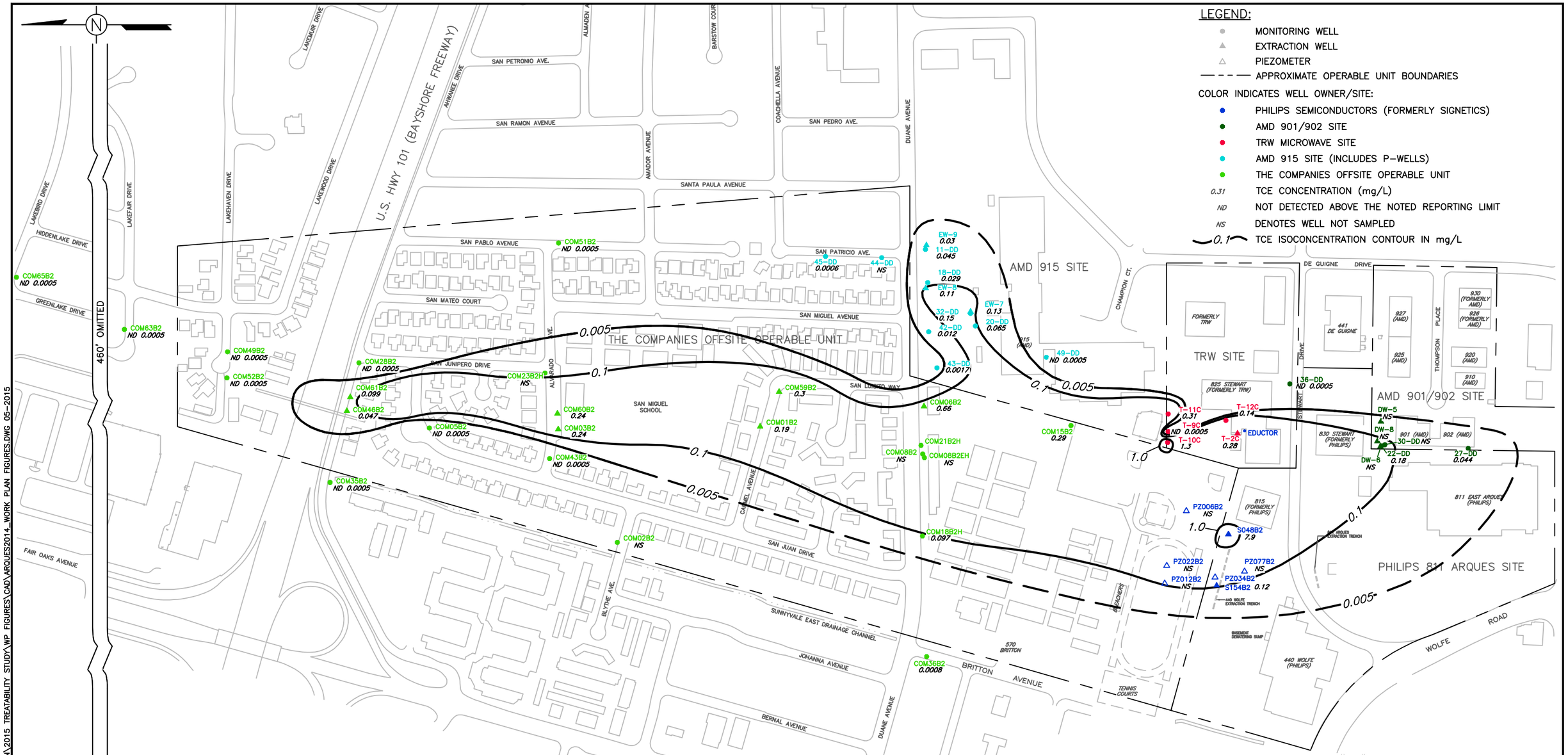

"B2" AQUIFER
TCE CONCENTRATION CONTOURS
FOURTH QUARTER 2014
811 EAST ARQUES AVENUE SITE
SUNNYVALE, CALIFORNIA

REFERENCES:

1. BASE MAP FROM KIER AND WRIGHT, NOVEMBER 1997.
2. EMCON DRAWING NO. EXGWE-A, FEBRUARY 1998.

No.	DATE	ISSUE / REVISION	DWN. BY	CK'D BY	AP'D BY
1	16 JAN 15	ISSUED FOR REPORT	TH	JWH	JWH

Locus TECHNOLOGIES

0 400 800
APPROXIMATE SCALE IN FEET

DRAWING NO. 27-005-B445

FIGURE 9

FILE NAME: I:\PROJECTS\P\PHILIPS\ARQUES\BIOREMEDIATION\2015 TREATABILITY STUDY\WP FIGURES\CAD\ARQUES2014_WORK PLAN FIGURES.DWG 05-2015

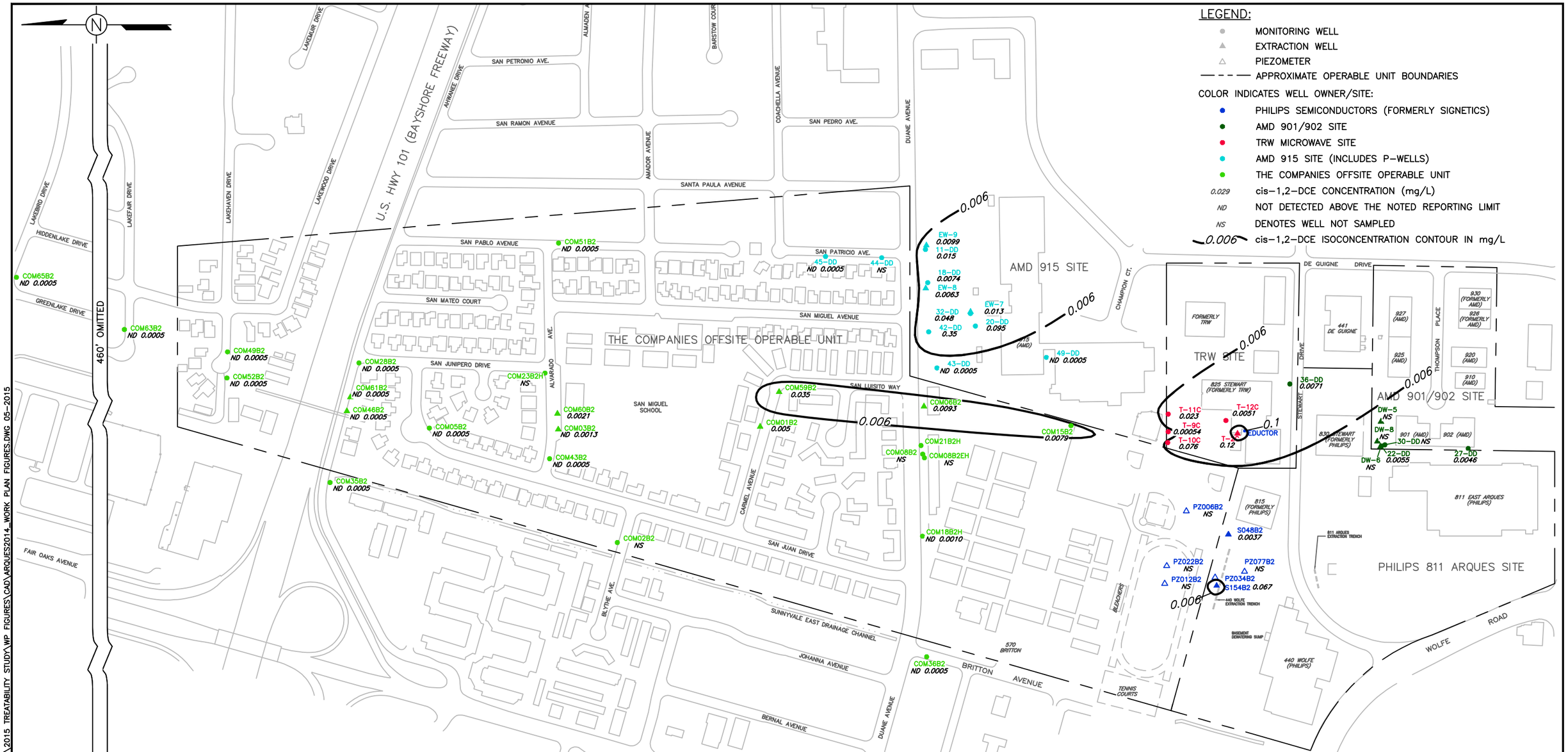

"B2" AQUIFER
cis-1,2-DCE CONCENTRATION CONTOURS
FOURTH QUARTER 2014
811 EAST ARQUES AVENUE SITE
SUNNYVALE, CALIFORNIA

REFERENCES:

1. BASE MAP FROM KIER AND WRIGHT, NOVEMBER 1997.
2. EMCON DRAWING NO. EXGWE-A, FEBRUARY 1998.

No.	DATE	ISSUE / REVISION	DWN. BY	CK'D BY	AP'D BY
1	16 JAN 15	ISSUED FOR REPORT	TH	JWH	JWH

Locus TECHNOLOGIES

0 400 800
APPROXIMATE SCALE IN FEET

DRAWING NO. 27-005-B446

FIGURE 10

FILE NAME: I:\PROJECTS\P\PHILIPS\ARQUES\BIOREMEDIATION\2015 TREATABILITY STUDY\WP FIGURES\CAD\ARQUES2014_WORK PLAN FIGURES.DWG 05-2015

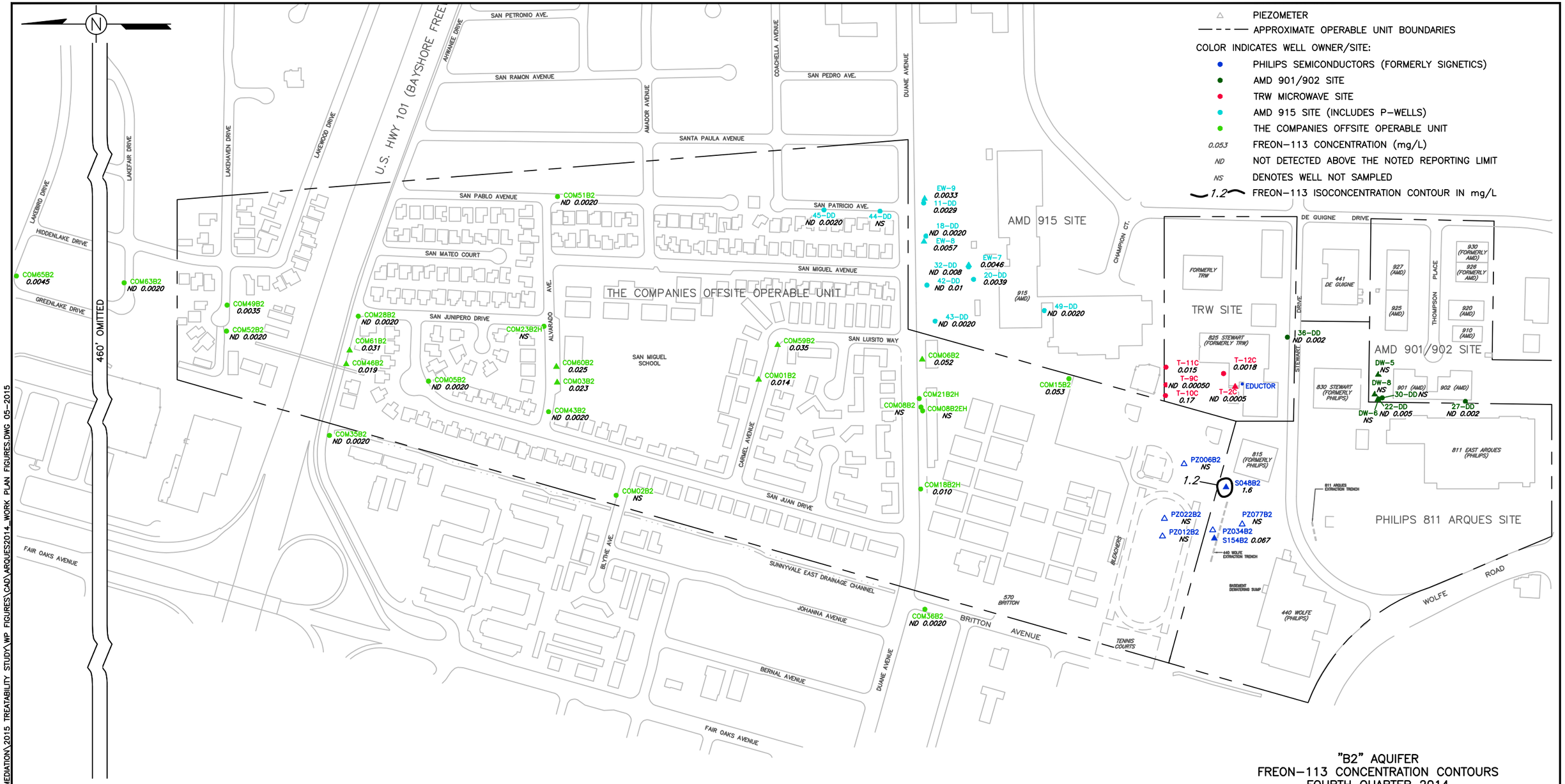

"B2" AQUIFER
FREON-113 CONCENTRATION CONTOURS
FOURTH QUARTER 2014
811 EAST ARQUES AVENUE SITE
SUNNYVALE, CALIFORNIA

REFERENCES:

1. BASE MAP FROM KIER AND WRIGHT, NOVEMBER 1997.
2. EMCON DRAWING NO. EXGWE-A, FEBRUARY 1998.

No.	DATE	ISSUE / REVISION	DWN. BY	CK'D BY	AP'D BY
1	16 JAN 15	ISSUED FOR REPORT	TH	JWH	JWH

Locus TECHNOLOGIES

0 400 800
APPROXIMATE SCALE IN FEET

DRAWING NO. 27-005-B447

FIGURE 11

FILE NAME: I:\PROJECTS\P\PHILIPS\ARQUES\BIOREMEDIATION\2015 TREATABILITY STUDY\WP FIGURES\CAD\ARQUES2014 WORK PLAN FIGURES.DWG 05-2015

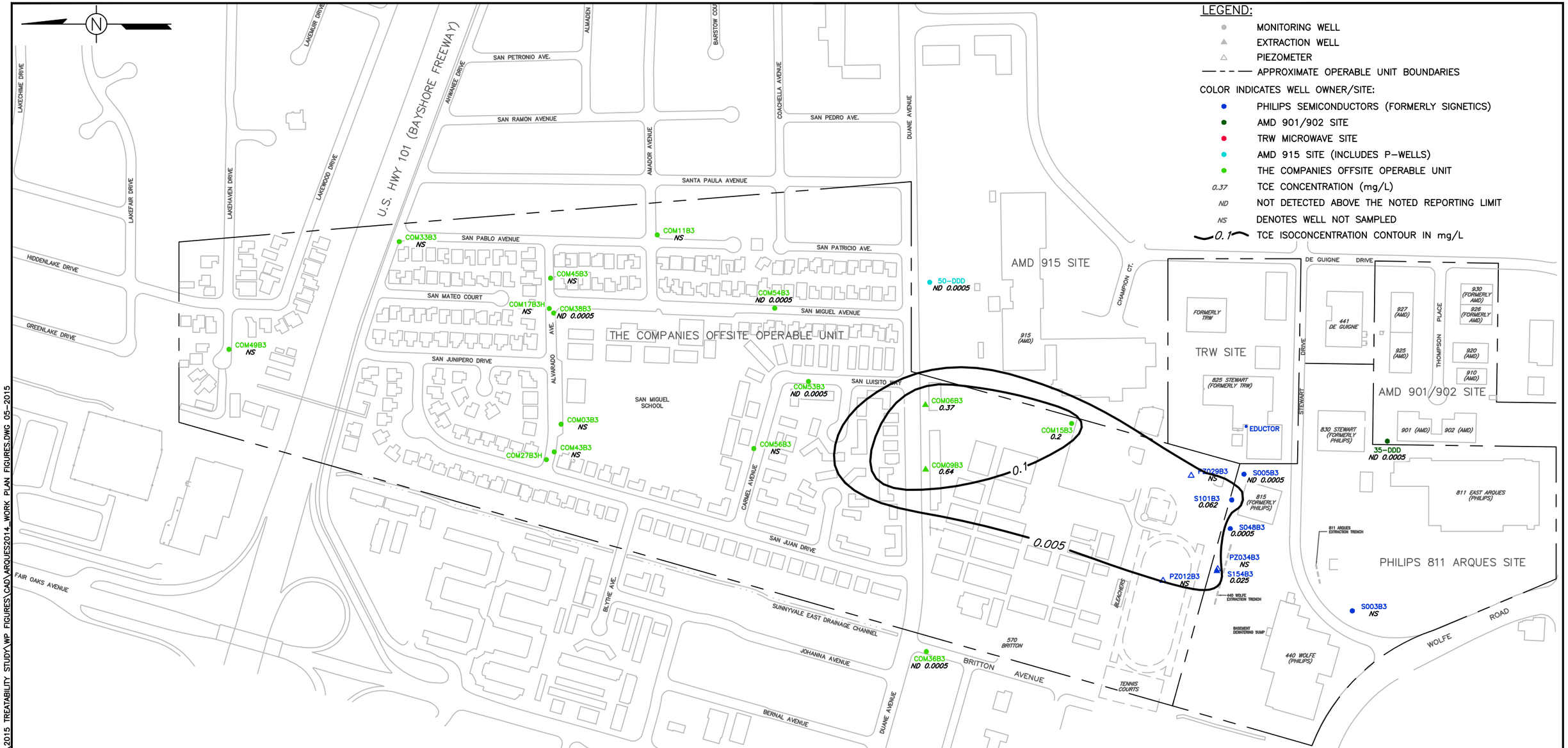

"B3" AQUIFER
TCE CONCENTRATION CONTOURS
FOURTH QUARTER 2014
811 EAST ARQUES AVENUE SITE
SUNNYVALE, CALIFORNIA

REFERENCES:

1. BASE MAP FROM KIER AND WRIGHT, NOVEMBER 1997.
2. EMCON DRAWING NO. EXGWE-A, FEBRUARY 1998.

No.	DATE	ISSUE / REVISION	DWN. BY	CK'D BY	AP'D BY
1	16 JAN 15	ISSUED FOR REPORT	TH	JWH	JWH

Locus TECHNOLOGIES

0 400 800
APPROXIMATE SCALE IN FEET

DRAWING NO. 27-005-B448

FIGURE 12

FILE NAME: I:\PROJECTS\P\PHILIPS\ARQUES\BIOREMEDIATION\2015 TREATABILITY STUDY\WP FIGURES\CAD\ARQUES2014_WORK PLAN FIGURES.DWG 05-2015

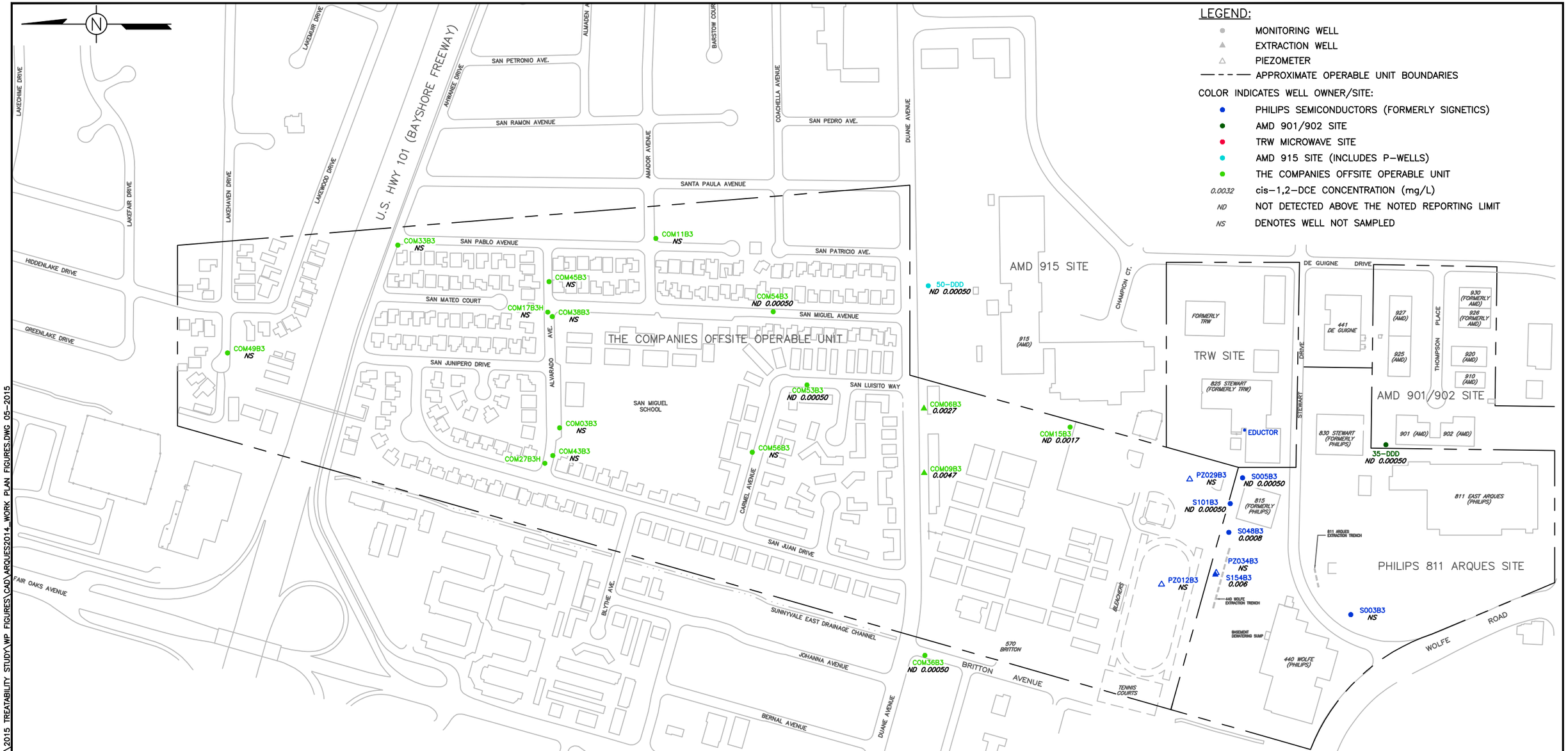

"B3" AQUIFER
cis-1,2-DCE CONCENTRATIONS
FOURTH QUARTER 2014
811 EAST ARQUES AVENUE SITE
SUNNYVALE, CALIFORNIA

REFERENCES:

1. BASE MAP FROM KIER AND WRIGHT, NOVEMBER 1997.
2. EMCON DRAWING NO. EXGWE-A, FEBRUARY 1998.

No.	DATE	ISSUE / REVISION	DWN. BY	CK'D BY	AP'D BY
1	16 JAN 15	ISSUED FOR REPORT	TH	JWH	JWH

Locus TECHNOLOGIES

0 400 800
APPROXIMATE SCALE IN FEET

DRAWING NO. 27-005-B449

FIGURE 13

FILE NAME: I:\PROJECTS\P\PHILIPS\ARQUES\BIOREMEDIATION\2015 TREATABILITY STUDY\WP FIGURES\CAD\ARQUES2014_WORK PLAN FIGURES.DWG 05-2015

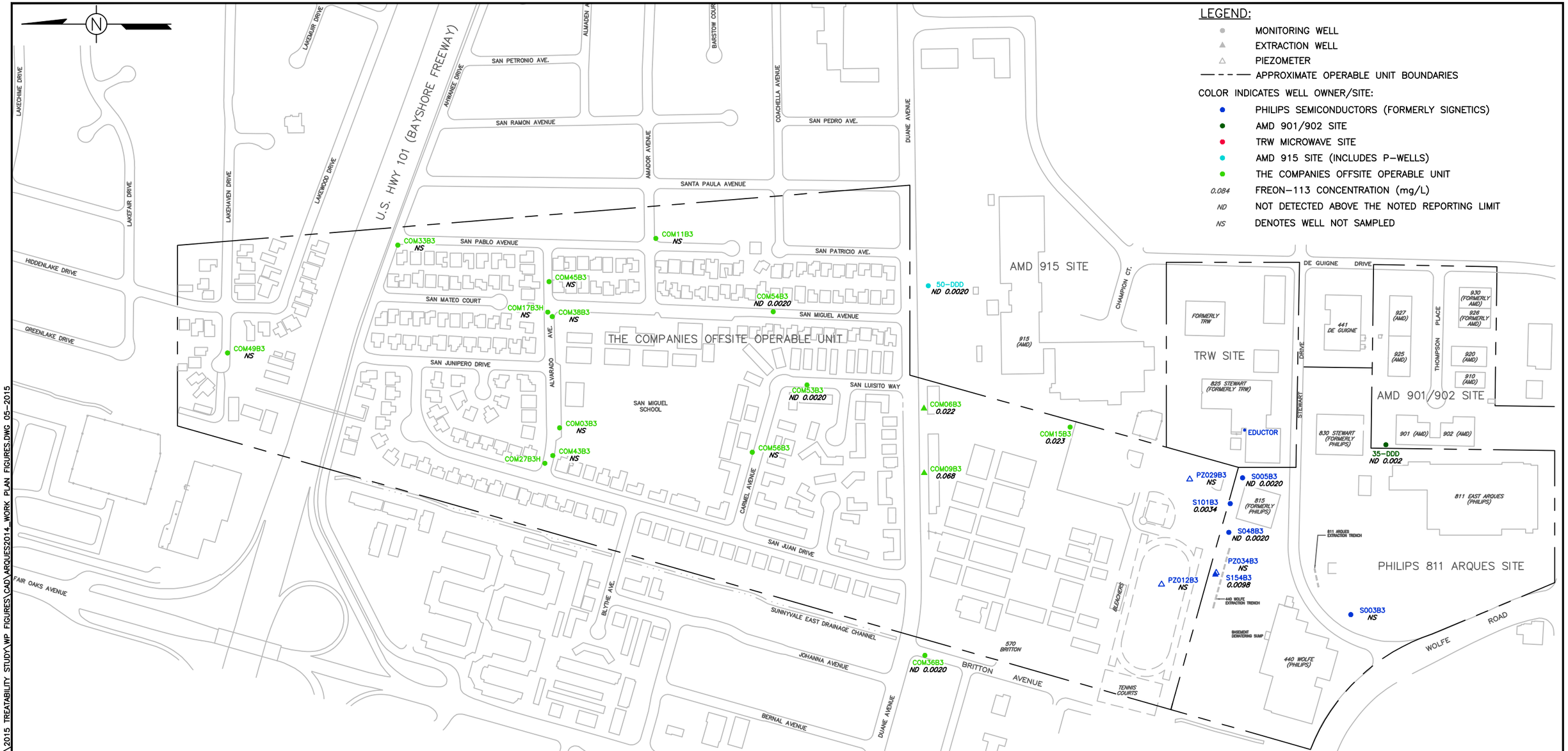

"B3" AQUIFER
FREON-113 CONCENTRATIONS
FOURTH QUARTER 2014
811 EAST ARQUES AVENUE SITE
SUNNYVALE, CALIFORNIA

REFERENCES:

1. BASE MAP FROM KIER AND WRIGHT, NOVEMBER 1997.
2. EMCON DRAWING NO. EXGWE-A, FEBRUARY 1998.

No.	DATE	ISSUE / REVISION	DWN. BY	CK'D BY	AP'D BY
1	15 JAN 16	ISSUED FOR REPORT	TH	JWH	JWH

Locus TECHNOLOGIES

0 400 800
APPROXIMATE SCALE IN FEET

DRAWING NO. 27-005-B450

FIGURE 14

FILE NAME: I:\PROJECTS\P\PHILIPS\ARQUES\BIOREMEDIATION\2015 TREATABILITY STUDY\WP FIGURES\CAD\ARQUES2014_WORK PLAN FIGURES.DWG 05-2015

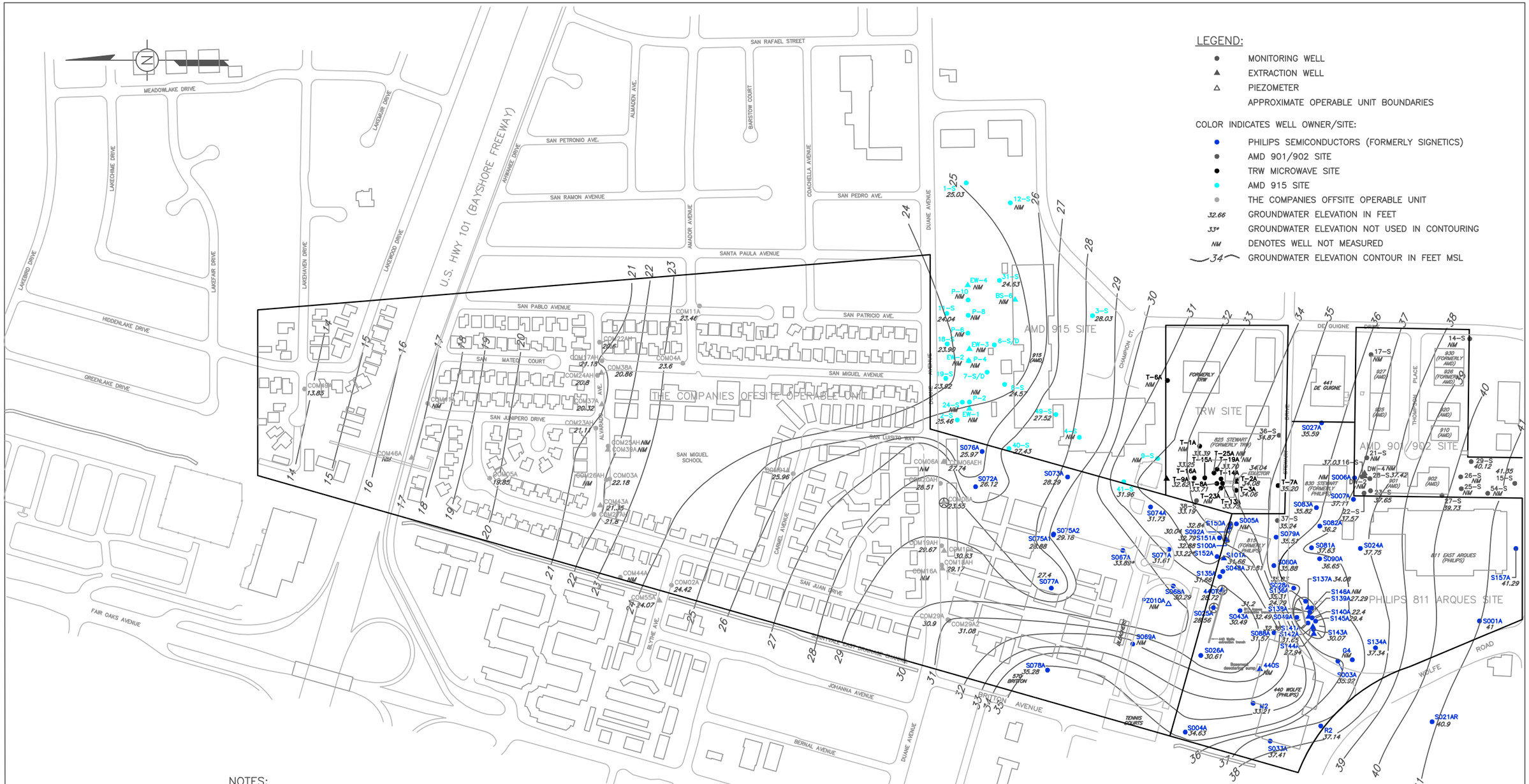

"A" AQUIFER
GROUNDWATER ELEVATION CONTOURS
OCTOBER 2014
811 ARQUES AVENUE SITE
SUNNYVALE, CALIFORNIA

NOTES:

1. WATER ELEVATIONS AT THE PHILIPS SITE WERE MEASURED ON 14 OCTOBER 2014.
2. WATER ELEVATIONS AT THE OOU SITE WERE MEASURED ON 14 OCTOBER 2014.
3. WATER ELEVATIONS AT THE AMD 901/902 AND 915 SITES WERE MEASURED ON 14 OCTOBER 2014.
4. WATER ELEVATIONS AT THE TRW SITE WERE MEASURED ON 14 OCTOBER 2014.

REFERENCES:

1. BASE MAP FROM KIER AND WRIGHT, NOVEMBER 1997.
2. EMCON DRAWING NO. EXGWE-A, FEBRUARY 1998.

No.	DATE	ISSUE / REVISION	DWN. BY	CK'D BY	AP'D BY
1	16 JAN 15	ISSUED FOR REPORT	ND	JWH	JWH

Locus TECHNOLOGIES

SCALE: 200 0 200 400 FEET

DRAWING NO. 27-005-B434

FIGURE 15

K:\99-014\B390.DWG 15 JAN 11

FIGURE 16
GEOMETRIC MEAN TCE CONCENTRATIONS

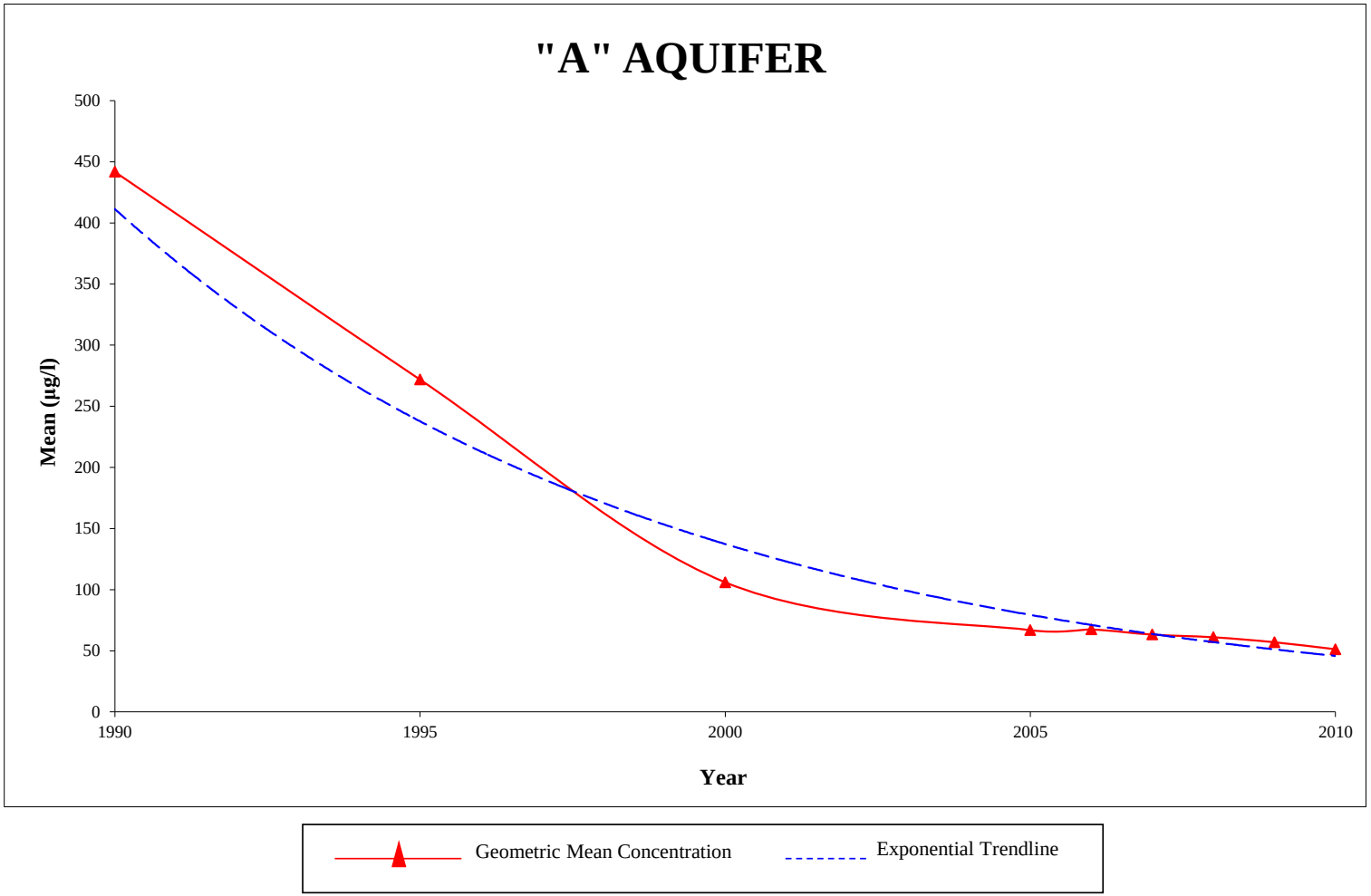

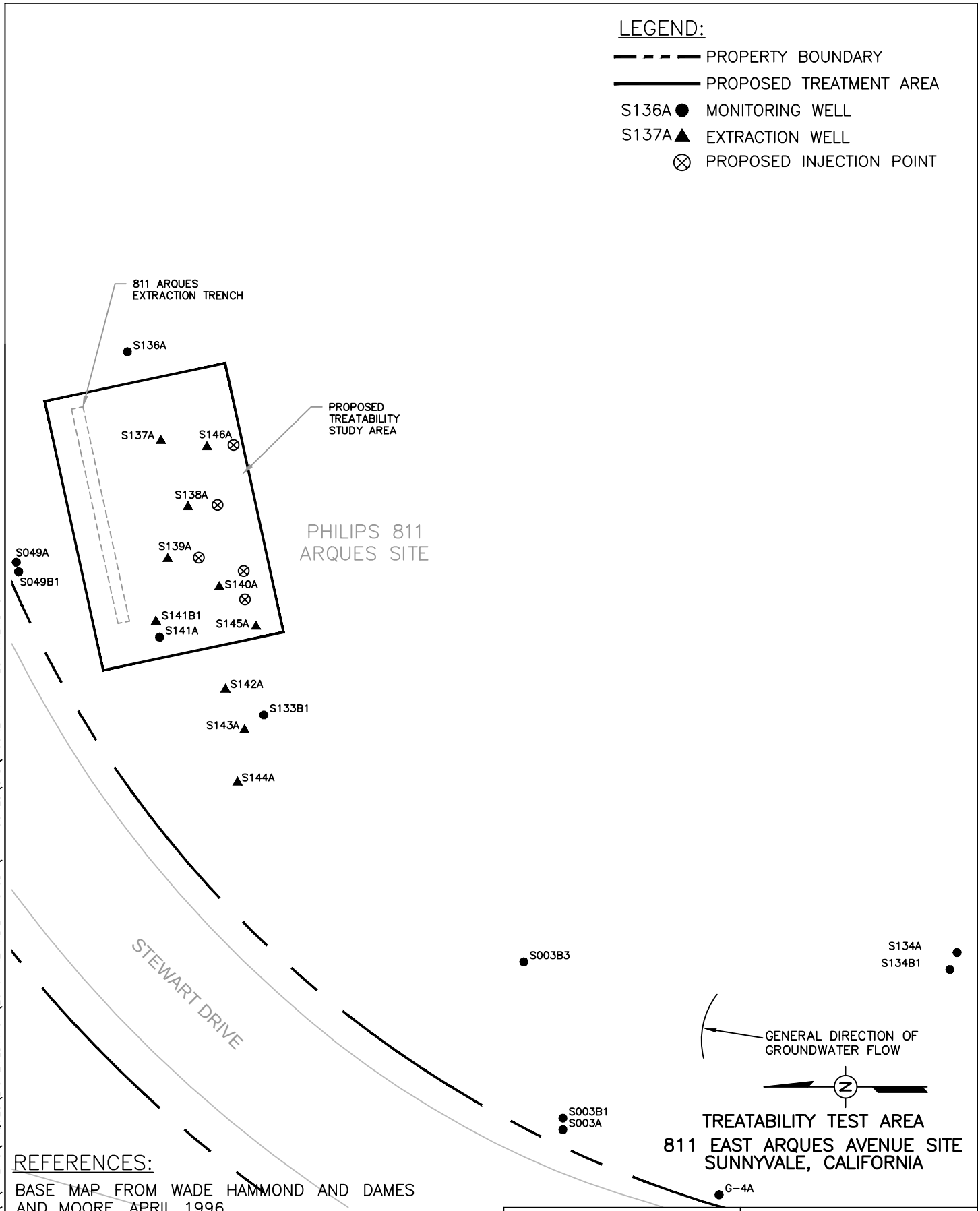

REFERENCES:

BASE MAP FROM WADE HAMMOND AND DAMES AND MOORE, APRIL 1996.

TREATABILITY TEST AREA
811 EAST ARQUES AVENUE SITE
SUNNYVALE, CALIFORNIA

No.	DATE	ISSUE / REVISION	DWN. BY	CK'D BY	AP'D BY
1	16 JAN 15	ISSUED FOR REPORT	CWC		SW

Locus TECHNOLOGIES

0 15 30 FEET
SCALE: 1"= 30'

DRAWING NO. 99-014-E42

FIGURE 17

FILE: I:\PROJECTS\P\PHILIPS\ARQUES\BIOREMEDIATION\2016 TREATABILITY STUDY\WP FIGURES\CAD\FIGURE 17 - TEST AREA.DWG

Figure 18. Bioremediation Treatability Study Proposed Schedule

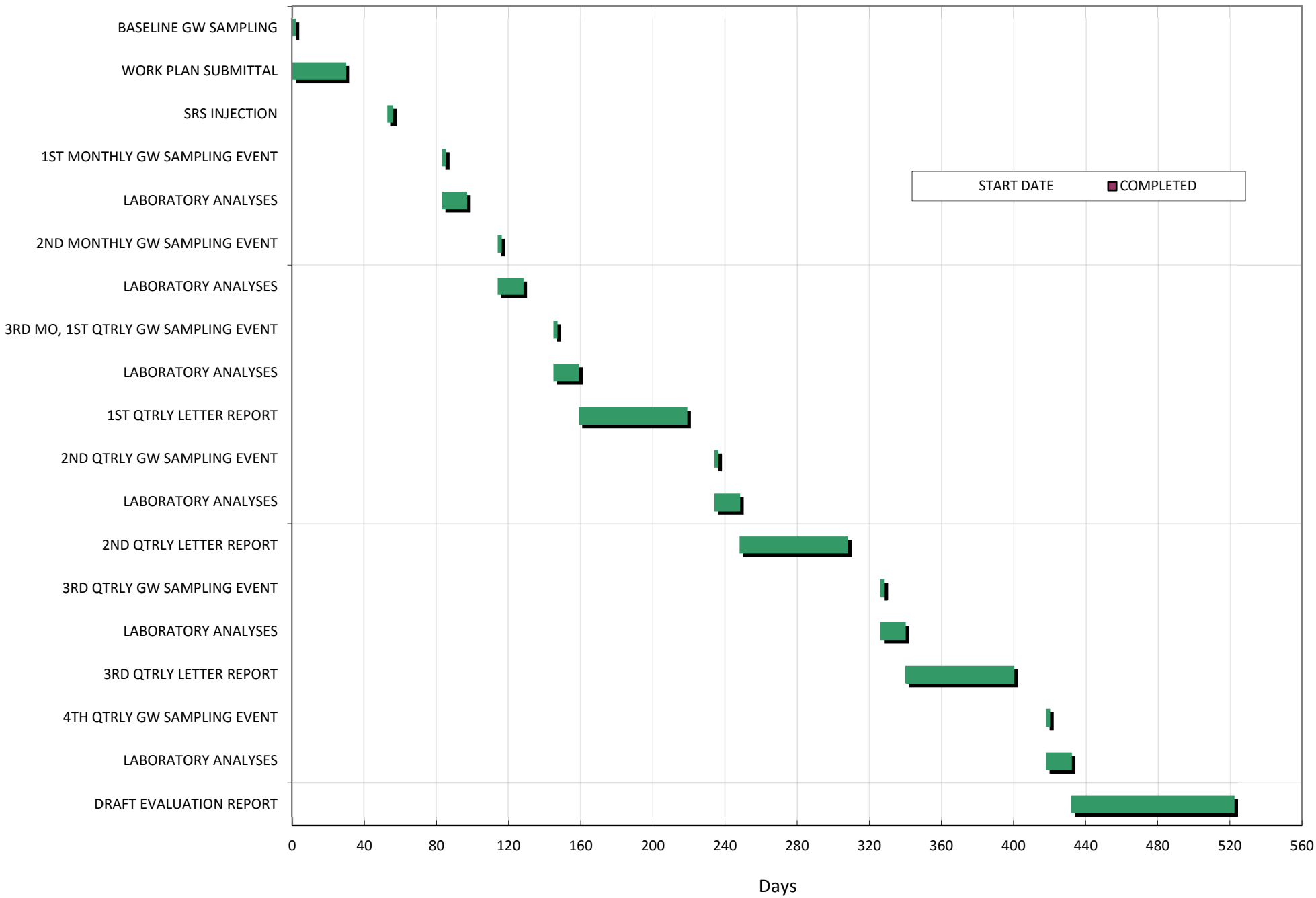

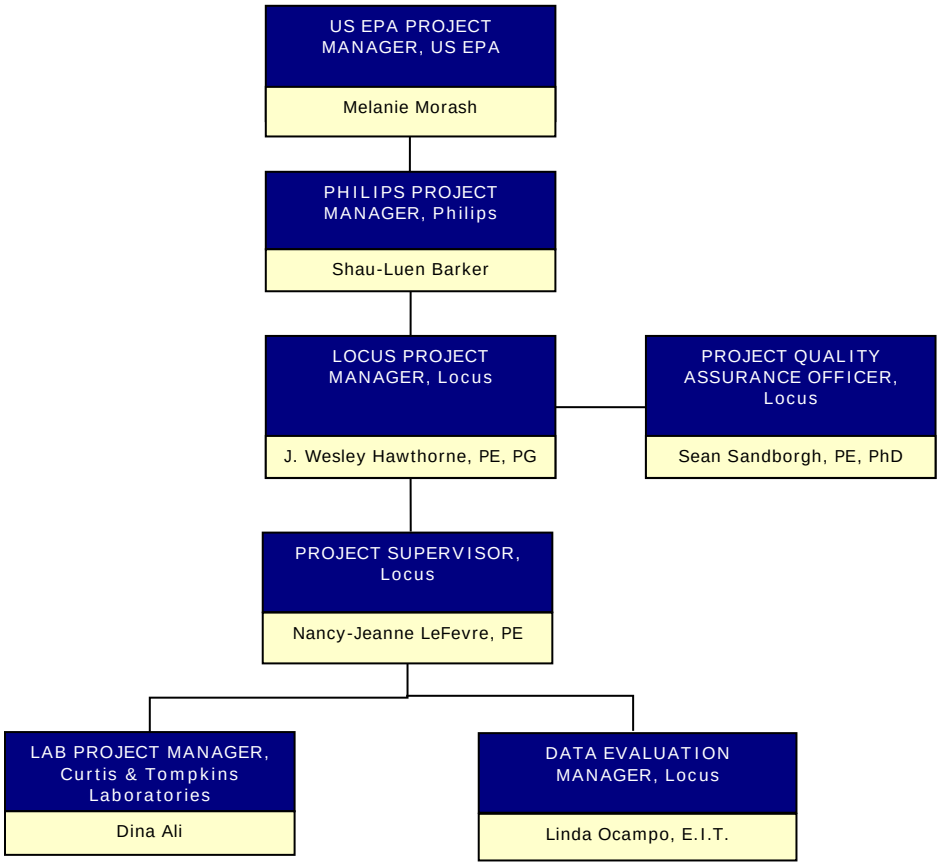

Figure 19
Organizational Chart
Treatability Study Work Plan:
Bioremediation
811 East Arques Avenue
Sunnyvale, California

Locus TECHNOLOGIES

Appendix A

Boring Logs

© Copyright Locus Technologies, 1997-2016. All rights reserved.

LOG OF EXPLORATORY BORING

Sheet 1 of 2
BORING NO. S-49 A,B

PROJECT NUMBER 377-2.1

BY LP DATE June 30, 1982

SURFACE ELEV.

CLASSIFICATION DATA			FIELD DATA			Depth in Ft.	Ground Water Levels	Samples	DESCRIPTION	
% Fines (-No.200)	Liquid Limit	Plasticity Index		Compressive Stength (TSF)	Penetration (Blows/Ft.)					
										Asphalt and baserock FILL
									(CH)	Very dark brown silty CLAY-moist
					21	5			(CH)	Very light brown very silty CLAY - moist
							▽			(Very moist)
					22	10			(SP)	Olive-brown gravelly medium SAND with well rounded clasts up to 1' - wet
										(Slightly clayey)
					16	15			(CH/CL)	Interbedded light gray silty CLAY, sandy CLAY and gravelly CLAY - wet to very moist
									(CL)	Blue-green fine sandy CLAY-very moist
					19	20				
BOTTOM OF BORING S-49A										
						25				(Increased sand content, minor gravel, moderate organics)
					38	30				
					23	35				(Many rootlets, occasional thin clayey sand lenses)
										(Very gravelly, rounded clasts up to 1" across)
					61	40				

REMARKS: Boring S-49A was converted to a ground-water monitoring well by installation of 22' of 2" PVC pipe. The lower 15' of casing was slotted and the coinciding annular space backfilled with gravel. A bentonite-concrete seal was placed in the annular space from 6' to the surface.

EMCON ASSOCIATES

LOG OF EXPLORATORY BORING

PROJECT NUMBER 377-2.1

BY LP DATE June 30, 1982

BORING NO. S-49 A,B

SURFACE ELEV.

CLASSIFICATION DATA			FIELD DATA			Depth in Ft.	Ground Water Levels	Samples	DESCRIPTION
% Fines (-No.200)	Liquid Limit	Plasticity Index		Compressive Stength (TSF)	Penetration (Blows/Ft.)				
					90+	45			(SW) Olive-brown gravelly, coarse to medium SAND - wet
					58	50			(CL) Blue-gray slightly sandy CLAY with abundant organics (rootlets, plant fiber) - very moist
									BOTTOM OF BORING AT 52'
						55			

REMARKS: Boring S-49B was converted to a ground-water monitoring well by installation of 52' of 2" PVC pipe. The lower 10' of casing was slotted and the coinciding annular space backfilled with gravel. A bentonite-concrete seal was placed in the annular space from 41' to the surace.

EMCON ASSOCIATES

LOG OF EXPLORATORY BORING

PROJECT NUMBER 377-02.75 | BORING NO. S-134A

PROJECT NAME Signetics Corporation | PAGE 1 OF 3

BY Louis Caruso | DATE 7/24/89 | SURFACE ELEV. 45.97 ft.

Recovery (ft/ft)	Penetrometer (tsf)	Penetration (blws/ft)	GROUND WATER LEVELS	DEPTH IN FT.	SAMPLES	LITHOGRAPHIC COLUMN	DESCRIPTION	WELL DETAIL
							ASPHALT BASEROCK FILL, SANDY GRAVEL	
1.5/1.5		18					SANDY CLAY (CL), mottled brownish gray (2.5Y, 5/2), very dark gray (5Y, 3/1), and light grayish brown (2.5Y, 6/2); 55-60% low to medium plasticity fines; 25-30% fine to coarse sand (f:m:c=1:2:3); 10-20% fine gravel; very stiff; damp. No product odor; abundant caliche nodules (up to 2"); localized iron oxide staining.	
0/1.5		14					@4': baserock fill mixed with native material.	
				5			CLAYEY GRAVEL (GC) to SANDY GRAVEL (GW), dark yellowish brown (10YR, 4/4); 10-15% fines; 25-35% fine to coarse sand (f:m:c=1:2:5); 50-65% fine to coarse gravel (f:c=1:2, <1-1/4"); medium dense; damp. No product odor; caliche present.	
1.2/1.5		12					SANDY CLAY to GRAVELLY CLAY (CL), as above at 1.5-4'; laminated; 1/2"-thick, very dark gray (2.5Y, N2) clay lens present.	
1.5/1.5		15					SAND (SW) to CLAYEY SAND (SC), light olive brown (2.5Y, 5/4) with patchy dark yellowish brown (10YR, 4/6) iron oxide staining; 10-15% low plasticity fines; 65-75% fine to coarse sand (f:m:c=3:2:2); 15-20% fine gravel (<3/4"); loose; damp. No product odor; adundant carbonate cement.	
1.2/1.5				10			@9.2': clayey gravel lens.	

REMARKS

Boring drilled with 8-inch hollow-stem augers. Samples obtained with modified California and Standard Penetration Test split-spoon samplers. Well construction information presented in Well Details.

EMCON ASSOCIATES

LOG OF EXPLORATORY BORING

PROJECT NUMBER 377-02.75 | BORING NO. S-134A

PROJECT NAME Signetics Corporation | PAGE 2 OF 3

BY Louis Caruso | DATE 7/24/89 | SURFACE ELEV. 45.97 ft.

Recovery (ft/ft)	Penetrometer (tsf)	Penetration (blws/ft)	GROUND WATER LEVELS	DEPTH IN FT.	SAMPLES	LITHOGRAPHIC COLUMN	DESCRIPTION	WELL DETAIL
		8					SAND to CLAYEY SAND (continued)	
1.5/1.5		12					CLAYEY GRAVEL (GC) to CLAYEY SAND (SC), mottled strong brown (7.5YR, 4/6) from iron oxide staining and olive gray (5Y, 4/2); 10-20% low plasticity fines; 40-45% fine to coarse sand (f:m:c=1:2:2); 40-45% fine to coarse gravel (f:c=1:2, <1"); medium dense; damp. No product odor; contains several silty sand lenses; patchy carbonate cementation.	
1.5/1.5		14					SANDY SILT (ML) and GRAVELLY SAND (SW) - INTERBEDDED: SANDY SILT : olive gray (5Y, 4/2); 85-90% nonplastic fines; 10-15% fine sand; trace fine gravel; stiff; moist. No product odor; iron oxide stained wood fragments present. GRAVELLY SAND: dark gray (5Y, 4/1); 5-10% fines 60-65%; fine to coarse sand (f:m:c=1:2:2); 25-35% fine to coarse gravel (f:c=5:1, <1"); medium dense; damp. No product odor. @15': thin (3-4"-thick) silty sand lens.	
1.5/1.5	1.2	6		15			SILTY CLAY (CL), dark gray (7.5YR, 4/0); 90-95% low to medium plasticity fines; 5-10% fine sand; trace fine gravel; firm; moist. No product odor; iron-oxide-stained vertical roots (up to 6" long) present. @16.2': mottled dark gray (7.5YR, N4) and gray (5Y, 5/1).	
1.5/1.5		5					SANDY CLAY (CL), mottled gray (2.5Y, N5) and dark gray (2.5Y, N4); 75-80% low plasticity fines; 20-25% fine sand; trace fine gravel; firm; moist. No product odor; trace root fragments; abundant carbonate.	
1.5/1.5	1.2	6	8/25/89 ▼ 7/24/89				CLAYEY SAND (SC) to SANDY CLAY (CL), dark gray (7.5YR, N4); 45-50% low plasticity fines; 45-50% fine sand; 5-10% fine gravel; medium dense or firm; moist. No product odor.	
1.5/1.5	1.3		▽	20				

REMARKS

Boring drilled with 8-inch hollow-stem augers. Samples obtained with modified California and Standard Penetration Test split-spoon samplers. Well construction information presented in Well Details.

EMCON ASSOCIATES

LOG OF EXPLORATORY BORING

PROJECT NUMBER 377-02.75 | BORING NO. S-134A

PROJECT NAME Signetics Corporation | PAGE 3 OF 3

BY Louis Caruso | DATE 7/24/89 | SURFACE ELEV. 45.97 ft.

Recovery (ft/ft)	Penetrometer (tsf)	Penetration (blws/ft)	GROUND WATER LEVELS	DEPTH IN FT.	SAMPLES	LITHOGRAPHIC COLUMN	DESCRIPTION	WELL DETAIL
		5					CLAYEY SAND to SANDY CLAY (continued) @19': 15-20% fine to coarse gravel. @19.2': 3"-thick sandy silt lens. @19.3': wet. @19.5': 10-15% fine to coarse gravel (<1-1/4"); some sand-filled root holes present. @21': 60-65% fine to medium sand.	
1.5/1.5								
							SANDY CLAY (CL), as above at 16.6-18'.	
1.5/1.5								
1.5/1.5							@24': 15-20% fine sand; fibrous root fragment common.	
	1.2	5						
				25				
1.5/1.5							@25.5': mottled dark greenish gray (5G, 4/1) and gray (5Y, 6/1); trace to 5% fine gravel; some open rootholes present.	
1.5/1.5								
							BORING TERMINATED AT 28.5 FEET.	
				30				

REMARKS

Boring drilled with 8-inch hollow-stem augers. Samples obtained with modified California and Standard Penetration Test split-spoon samplers. Well construction information presented in Well Details.

EMCON ASSOCIATES

WELL DETAILS

PROJECT NUMBER 377-02.75
PROJECT NAME Signetics Corporation
LOCATION 811 Arques Drive
WELL PERMIT NO. 89W1348

BORING / WELL S-134A
TOP OF CASING ELEV. 45.97 ft.
GROUND SURFACE ELEV. 46.30 ft.
DATUM MSL
INSTALLATION DATE 7/24/89

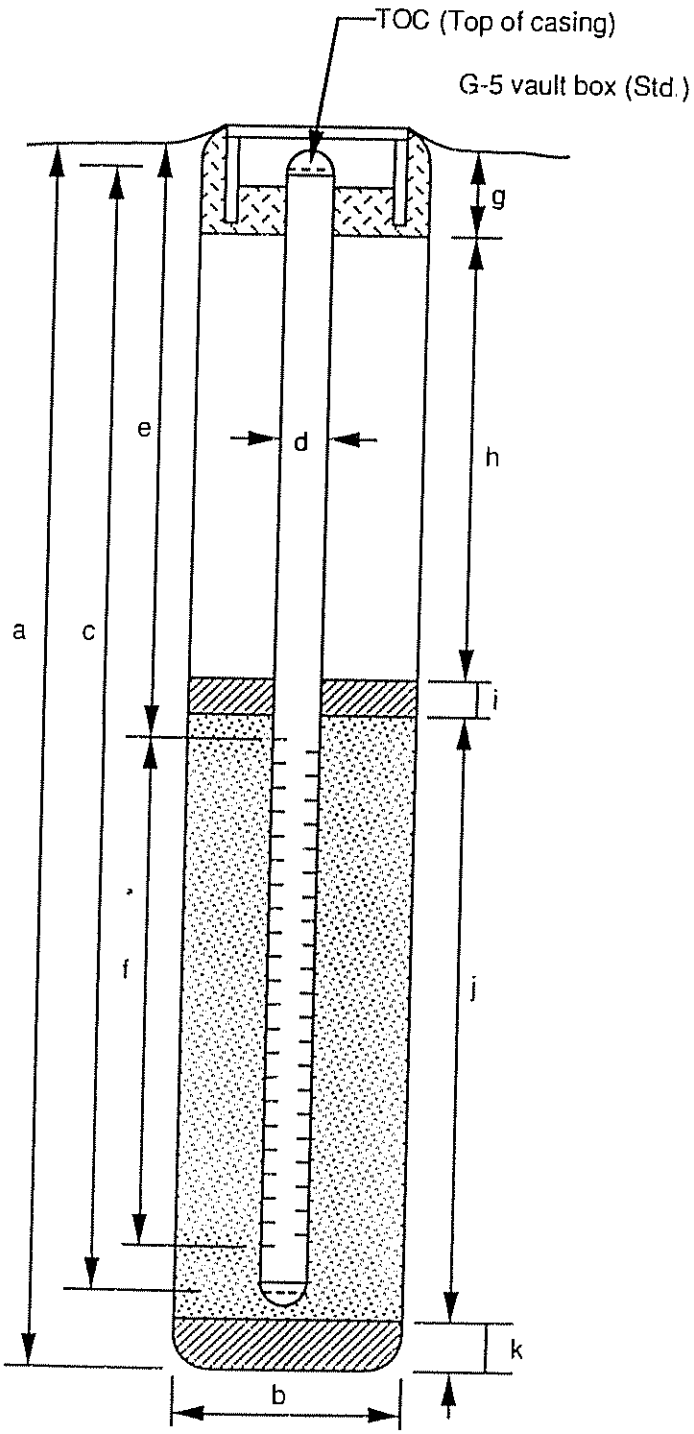

EXPLORATORY BORING

a. Total depth 28.5 ft.
b. Diameter 8 in.
Drilling method Hollow-stem auger

WELL CONSTRUCTION

c. Total casing length (0.2-28') 27.8 ft.
Material Schedule 40 PVC
d. Diameter 2 in.
e. Depth to top perforations 14 ft.
f. Perforated length 14 ft.
Perforated interval from 14 to 28 ft.
Perforation type Machine Slotted
Perforation size 0.020-inch
g. Surface seal (0-1') 1 ft.
Material Concrete
h. Backfill (1-11') 10 ft.
Material Cement w/ 5% Bentonite
i. Seal (11-12') 1 ft.
Material 3/8" Bentonite Pellets
j. Gravel pack 16 ft.
Gravel pack interval from 12 to 28 ft.
Material Lonestar #2x12 Sand
k. Bottom seal (28-28.5') 0.5 ft.
Material 3/8" Bentonite Pellets

Form prepared by LJC

LOG OF EXPLORATORY BORING

PROJECT NUMBER 377-02.90 | BORING NO. S-137A

PROJECT NAME Signetics Company | PAGE 1 OF 4

BY A. Waldman | DATE 11/5/91 | SURFACE ELEV. 42.71 ft.

Recovery (ft/ft)	PID (ppm)	Pocket Penetrometer (tsf)	GROUND WATER LEVELS	DEPTH IN FT.	SAMPLES	LITHOGRAPHIC COLUMN	DESCRIPTION	WELL DETAIL
							ASPHALT	
							FILL, GRAVEL BASE MATERIAL	
1.5/1.5	0						CLAY (CH), black (2.5Y, N2/0); high-plasticity fines; trace fine sand; trace rootlets; diffuse caliche; crumbles easily; damp.	
1.5/1.5								
				5			SILTY CLAY (CL), light brownish gray (10YR, 6/2); 90% medium-plasticity fines; 10% fine sand; trace fine gravel; crumbled texture; abundant caliche; moderately abundant rootholes; stiff to very stiff; dry.	
1.5/1.5	0	2.0						
							@6.5': grayish brown (10YR, 7/2)	
1.5/1.5		3.5					SANDY CLAY (CL), light gray (10YR, 7/2); 70% low-plasticity fines, very silty; 30% fine sand, trace medium to coarse sand; very abundant caliche; very stiff; dry.	
1.5/1.5	0						SAND (SP), brown (10YR, 5/3); 5% non-plastic fines; 90% fine to coarse sand (f:m:c=2:2:1); 5% fine gravel; damp.	
				10				

EMCON ASSOCIATES

REMARKS

Boring drilled with 8"-diameter hollow-stem augers on 11/5/91 then reamed with a 10"-diameter tricone bit on 11/8 & 11/11/91 using air-rotary casing hammer equipment. Boring sampled continuously with a 1.5'-long sampler (2.5"ID) from a depth of 2.5 feet. Boring was converted to a 4"-diameter PVC extraction well on 11/11/91. Well construction information presented in attached Well Details and shown graphically on this log. See attached explanation

LOG OF EXPLORATORY BORING

PROJECT NUMBER 377-02.90 | BORING NO. S-137A
PROJECT NAME Signetics Company | PAGE 2 OF 4
BY A. Waldman | DATE 11/5/91 | SURFACE ELEV. 42.71 ft.

Recovery (ft/ft)	PID (ppm)	Pocket Penetrometer (tsf)	GROUND WATER LEVELS	DEPTH IN FT.	SAMPLES	LITHOGRAPHIC COLUMN	DESCRIPTION	WELL DETAIL
1.5/1.5							SAND (SP), continued. @10.0': 0.4-foot-thick silty sand lens, 15% fines; 85% fine sand.	
							SANDY CLAY (CL), dark grayish brown (2.5Y, 4/2); 60% low-plasticity fines; 30% fine to coarse sand; 10% fine gravel; moist.	
1.5/1.5	31						GRAVELLY SAND TO SILTY SAND (SP-SM), dark grayish brown (2.5Y, 4/2); 10% non-plastic fines; 50% fine to coarse sand (f:m:c=1:1:1); 40% fine gravel; damp.	
1.0/1.5							SILTY SAND (SM), dark grayish brown (2.5Y, 4/2); 35% low-plasticity fines; 65% fine sand; moist.	
	218		11/5/91					
1.5/1.5				15			SANDY CLAY TO GRAVELLY CLAY (CL), very dark grayish brown (2.5Y, 3/2); 60% medium-plasticity fines; 20% fine to coarse sand; 20% fine gravel; moist to wet.	
1.5/1.5		0.8	12/23/91				CLAY (CL), grayish brown (2.5Y, 5/2); 90% medium-plasticity fines; 10% fine sand; extensive rootlet network; firm; wet.	
							SANDY CLAY (CL), grayish brown (2.5Y, 5/2); 80% medium-plasticity fines; 20% fine sand; caliche rich (nodules <15mm diameter); crumbled texture; soft to firm; wet.	
1.5/1.5		0.5					CLAYEY SAND (SC) TO SANDY CLAY (CL), dark gray (2.5Y, N4/0); 50% medium-plasticity fines; 50% fine sand; diffused caliche; wet. @19.4': 0.1-foot-thick fine-grained sand lens.	
1.5/1.5	410			20				

EMCON ASSOCIATES

REMARKS

Boring drilled with 8"-diameter hollow-stem augers on 11/5/91 then reamed with a 10"-diameter tricone bit on 11/8 & 11/11/91 using air-rotary casing hammer equipment. Boring sampled continuously with a 1.5'-long sampler (2.5"ID) from a depth of 2.5 feet. Boring was converted to a 4"-diameter PVC extraction well on 11/11/91. Well construction information presented in attached Well Details and shown graphically on this log. See attached explanation

LOG OF EXPLORATORY BORING

PROJECT NUMBER 377-02.90 | BORING NO. S-137A

PROJECT NAME Signetics Company | PAGE 3 OF 4

BY A. Waldman | DATE 11/5/91 | SURFACE ELEV. 42.71 ft.

Recovery (ft/ft)	PID (ppm)	Pocket Penetrometer (tsf)	GROUND WATER LEVELS	DEPTH IN FT.	SAMPLES	LITHOGRAPHIC COLUMN	DESCRIPTION	WELL DETAIL
1.5/1.5							CLAYEY SAND (SC) TO SANDY CLAY (CL), continued. @20.5': trace rootlets; trace fine gravel; some caliche nodules.	
1.5/1.5								
1.5/1.5		0.2					SANDY CLAY (CL), gray (2.5Y, N5/0); 75% medium-plasticity fines; 25% fine sand; abundant caliche nodules (<20mm diameter); trace roots; very soft to soft; wet.	
0.8/1.5	0			25			CLAY (CL), gray (2.5Y, N5/0); 90% medium- to high-plasticity fines; 10% fine sand; wet.	
1.5/1.5		0.8					SANDY CLAY (CL), gray (2.5Y, N5/0); 80% medium-plasticity fines; 20% fine sand; abundant caliche nodules (<15mm diameter); firm; wet.	
1.5/1.5								
0.7/1.5				30				

EMCON ASSOCIATES

REMARKS

Boring drilled with 8"-diameter hollow-stem augers on 11/5/91 then reamed with a 10"-diameter tricone bit on 11/8 & 11/11/91 using air-rotary casing hammer equipment. Boring sampled continuously with a 1.5'-long sampler (2.5"ID) from a depth of 2.5 feet. Boring was converted to a 4"-diameter PVC extraction well on 11/11/91. Well construction information presented in attached Well Details and shown graphically on this log. See attached explanation

LOG OF EXPLORATORY BORING

PROJECT NUMBER 377-02.90 | BORING NO. S-137A

PROJECT NAME Signetics Company | PAGE 4 OF 4

BY A. Waldman | DATE 11/5/91 | SURFACE ELEV. 42.71 ft.

Recovery (ft/ft)	PID (ppm)	Pocket Penetrometer (tsf)	GROUND WATER LEVELS	DEPTH IN FT.	SAMPLES	LITHOGRAPHIC COLUMN	DESCRIPTION	WELL DETAIL
							SANDY CLAY (CL), continued.	
1.5/1.5							@31.0': 0.5-foot-thick silty sand lens; 35% fines; 65% fine sand.	
1.5/1.5								
	0						CLAYEY SAND (SC), dark gray (2.5Y, N4/0); 25% medium-plasticity fines; 65% fine to coarse sand (f:m:c=1:1:1); 10% fine gravel; wet. @34.0': very silty; 40% low-plasticity fines; 55% fine sand; 5% medium to coarse sand; trace fine gravel.	
1.5/1.5								
				35				
							BORING TERMINATED AT 35.5 FEET.	
				40				

EMCON ASSOCIATES

REMARKS

Boring drilled with 8"-diameter hollow-stem augers on 11/5/91 then reamed with a 10"-diameter tricone bit on 11/8 & 11/11/91 using air-rotary casing hammer equipment. Boring sampled continuously with a 1.5'-long sampler (2.5"ID) from a depth of 2.5 feet. Boring was converted to a 4"-diameter PVC extraction well on 11/11/91. Well construction information presented in attached Well Details and shown graphically on this log. See attached explanation

WELL DETAILS

PROJECT NUMBER 377-02.90
PROJECT NAME Signetics Company
LOCATION 811 E. Arques Ave., Sunnyvale
WELL PERMIT NO. 91W2308

BORING / WELL S-137A
TOP OF CASING ELEV. 42.34'
GROUND SURFACE ELEV. 42.71'
DATUM MSL
INSTALLATION DATE 11/11/91

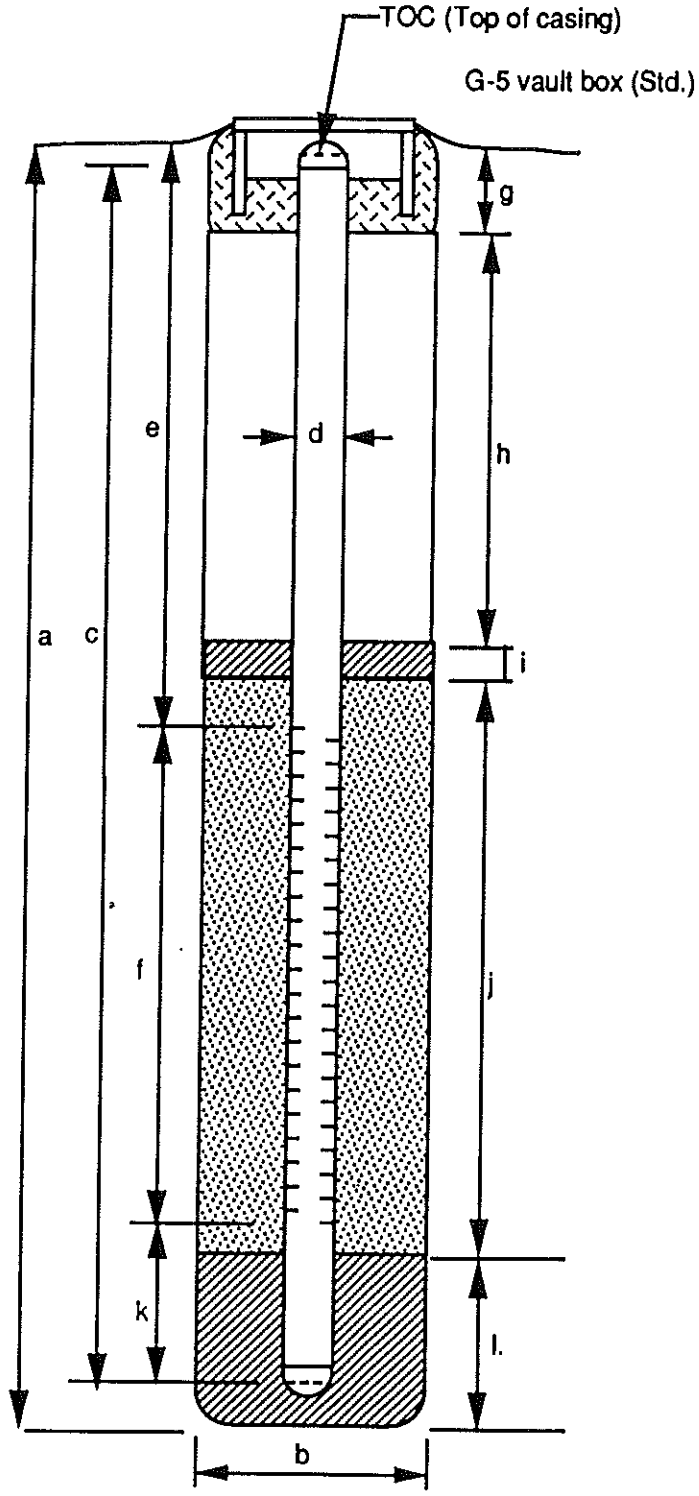

EXPLORATORY BORING

a. Total depth 35.5 ft.
b. Diameter 10 in.
Drilling methods Hollow-stem auger & air rotary casing advance. (See remark on Exp. log.)

WELL CONSTRUCTION

c. Total casing length 30.9 ft.
Material Schedule 40 PVC
d. Diameter 4 in.
e. Depth to top perforations 14.0 ft.
f. Perforated length 14.0 ft.
Perforated interval from 14.0 to 28.0 ft.
Perforation type Circumslot
Perforation size 0.020 in.
g. Surface seal (0 - 1.5') 1.5 ft.
Material Concrete
h. Backfill (1.5 - 10.0') 8.5 ft.
Material 5% bentonite/cement grout
i. Seal (10.0 - 11.0') 1.0 ft.
Material Bentonite pellets
j. Gravel pack 17.5 ft.
Gravel pack interval from 11.0 to 28.5 ft.
Material Lonestar #2/12 sand
k. Sump (28.0 - 31.3') 3.3 ft.
Material Schedule 40 PVC
l. Bottom Seal (28.5 - 35.5') 7.0 ft.
Material Bentonite chips

Well installed by AJW

LOG OF EXPLORATORY BORING

PROJECT NUMBER 377-02.90 | BORING NO. S-138A

PROJECT NAME Signetics Company | PAGE 1 OF 4

BY A. Waldman | DATE 11/5/91 | SURFACE ELEV. 43.03 ft.

Recovery (ft/ft)	PID (ppm)	Pocket Penetrometer (tsf)	GROUND WATER LEVELS	DEPTH IN FT.	SAMPLES	LITHOGRAPHIC COLUMN	DESCRIPTION	WELL DETAIL
							ASPHALT	
							FILL, GRAVEL BASE MATERIAL	
0.5/1.5	0	2.5					CLAY (CH), black (2.5Y, N2/0); high-plasticity fines; trace fine sand; trace fine gravel; trace rootlets; diffused caliche; very stiff; damp.	
1.5/1.5		2.0		5			SILTY CLAY (CL), light brownish gray (10YR, 6/2); 90% medium-plasticity fines; 10% fine sand; trace fine gravel; abundant diffuse caliche; some rootholes; trace gastropod shells; very stiff; damp. @5.5': grayish brown (10YR, 5/2).	
1.1/1.5	0							
1.2/1.5		3.5					SANDY CLAY (CL), light brown gray (2.5Y, 6/2); 70% low-plasticity fines, very silty; 25% fine sand, 5% medium sand, trace coarse sand; very abundant caliche; crumbles easily; very stiff; dry.	
1.5/1.5	0			10			SAND TO SILTY SAND (SP-SM), grayish brown (2.5Y, 5/2); 10% non-plastic fines; 75% fine to coarse sand (f:m:c=1:1:1); 15% fine gravel; damp.	

EMCON ASSOCIATES

REMARKS

Boring drilled with 8-inch-diameter hollow-stem augers on 11/5/91 then reamed with a 10-inch-diameter tricone bit on 11/12/91 using air-rotary casing hammer equipment. Boring sampled continuously with a 1.5-foot-long sampler (2.5"ID) from a depth of 2.5 feet. Boring converted to a 4-inch-diameter PVC extraction well on 11/12/91. Well construction information presented in attached Well Details and shown graphically on this log. See explanation sheet.

LOG OF EXPLORATORY BORING

PROJECT NUMBER 377-02.90 | BORING NO. S-138A

PROJECT NAME Signetics Company | PAGE 2 OF 4

BY A. Waldman | DATE 11/5/91 | SURFACE ELEV. 43.03 ft.

Recovery (ft/ft)	PID (ppm)	Pocket Penetrometer (tsf)	GROUND WATER LEVELS	DEPTH IN FT.	SAMPLES	LITHOGRAPHIC COLUMN	DESCRIPTION	WELL DETAIL
1.5/1.5							SAND TO SILTY SAND (SP-SM), continued.	
							CLAYEY SAND (SC), grayish brown (2.5Y, 5/2); 40% low-plasticity fines; 50% fine to coarse sand (f:m:c=1:1:1); 10% fine gravel; trace shell fragments; iron-oxide staining; moist.	
1.5/1.5								
	36						SAND TO SILTY SAND (SP-SM), dark grayish brown (2.5Y, 4/2); 10% non-plastic fines; 50% fine to coarse sand (f:m:c=1:1:1); 40% fine gravel; iron-oxide staining; damp.	
1.5/1.5							@13.0': 90% fine sand, trace coarse sand.	
							@13.2' and 13.8': 0.3'- and 0.1'-foot thick silty sand lenses.	
1.5/1.5							SANDY CLAY (CL), very dark grayish brown (2.5Y, 3/2); 80% medium-plasticity fines; 20% fine to medium sand, trace coarse sand; diffuse caliche; moist.	
	1100			15				
			11/5/91 ▽				CLAYEY GRAVEL (GC), 20% medium-plasticity fines; 30% fine to coarse sand; 50% fine gravel.	
1.5/1.5							SANDY CLAY (CL), grayish brown (2.5Y, 5/2); 60% medium-plasticity fines; 35% fine to coarse sand (f:m:c=2:2:1); 5% fine gravel; extensive rootlet network; wet.	
		0.8	12/23/91 ▼				@16.5': gray (2.5Y, N6/0); crumbled texture; very abundant nodular caliche.	
1.5/1.5								
		0.5					@18.5': gray (2.5Y, N5/0).	
1.5/1.5								
				20				

EMCON ASSOCIATES

REMARKS

Boring drilled with 8-inch-diameter hollow-stem augers on 11/5/91 then reamed with a 10-inch-diameter tricone bit on 11/12/91 using air-rotary casing hammer equipment. Boring sampled continuously with a 1.5-foot-long sampler (2.5"ID) from a depth of 2.5 feet. Boring converted to a 4-inch-diameter PVC extraction well on 11/12/91. Well construction information presented in attached Well Details and shown graphically on this log. See explanation sheet.

LOG OF EXPLORATORY BORING

PROJECT NUMBER 377-02.90 | BORING NO. S-138A

PROJECT NAME Signetics Company | PAGE 3 OF 4

BY A. Waldman | DATE 11/5/91 | SURFACE ELEV. 43.03 ft.

Recovery (ft/ft)	PID (ppm)	Pocket Penetrometer (tsf)	GROUND WATER LEVELS	DEPTH IN FT.	SAMPLES	LITHOGRAPHIC COLUMN	DESCRIPTION	WELL DETAIL
							SANDY CLAY (CL), continued.	
1.5/1.5							@21.0': 60% fines; 40% fine sand, trace medium sand; gravel absent; diffuse caliche.	
1.5/1.5							@22.5': disseminated caliche.	
1.5/1.5							@23.5': 80% fines; 20% fine sand; trace roots.	
1.5/1.5		1.2		25			@25.5': stiff.	
1.1/1.5		2.0					@27.0': stiff to very stiff.	
0.5/1.5							@28.0': very abundant caliche .	
0.3/1.5				30				

EMCON ASSOCIATES

REMARKS

Boring drilled with 8-inch-diameter hollow-stem augers on 11/5/91 then reamed with a 10-inch-diameter tricone bit on 11/12/91 using air-rotary casing hammer equipment. Boring sampled continuously with a 1.5-foot-long sampler (2.5"ID) from a depth of 2.5 feet. Boring converted to a 4-inch-diameter PVC extraction well on 11/12/91. Well construction information presented in attached Well Details and shown graphically on this log. See explanation sheet.

LOG OF EXPLORATORY BORING

PROJECT NUMBER 377-02.90 | BORING NO. S-138A

PROJECT NAME Signetics Company | PAGE 4 OF 4

BY A. Waldman | DATE 11/5/91 | SURFACE ELEV. 43.03 ft.

Recovery (ft/ft)	PID (ppm)	Pocket Penetrometer (tsf)	GROUND WATER LEVELS	DEPTH IN FT.	SAMPLES	LITHOGRAPHIC COLUMN	DESCRIPTION	WELL DETAIL
							SANDY CLAY (CL), continued.	
1.2/1.5							@31.0': 0.4-foot-thick sandy silt lens.	
1.5/1.5							@32.5': gray (2.5Y, N5/0); 65% fines; 35% fine to coarse sand; trace fine gravel.	
1.0/1.5							GRAVELLY SAND TO SILTY SAND (SP-SM), very dark gray (2.5Y, N3/0); 10% low-plasticity fines; 50% fine to coarse sand; 40% fine gravel; wet.	
				35			SILTY SAND (SM) dark grayish brown (2.5Y, 4/2); 40% non-plastic fines; 60% fine sand; trace roots; wet.	
							BORING TERMINATED AT 35.5 FEET.	
				40				

EMCON ASSOCIATES

REMARKS

Boring drilled with 8-inch-diameter hollow-stem augers on 11/5/91 then reamed with a 10-inch-diameter tricone bit on 11/12/91 using air-rotary casing hammer equipment. Boring sampled continuously with a 1.5-foot-long sampler (2.5"ID) from a depth of 2.5 feet. Boring converted to a 4-inch-diameter PVC extraction well on 11/12/91. Well construction information presented in attached Well Details and shown graphically on this log. See explanation sheet.

WELL DETAILS

PROJECT NUMBER 377-02.90
PROJECT NAME Signetics Company
LOCATION 811 E. Arques Ave., Sunnyvale
WELL PERMIT NO. 91W2309

BORING / WELL S-138A
TOP OF CASING ELEV. 42.67'
GROUND SURFACE ELEV. 43.03'
DATUM MSL
INSTALLATION DATE 11/12/91

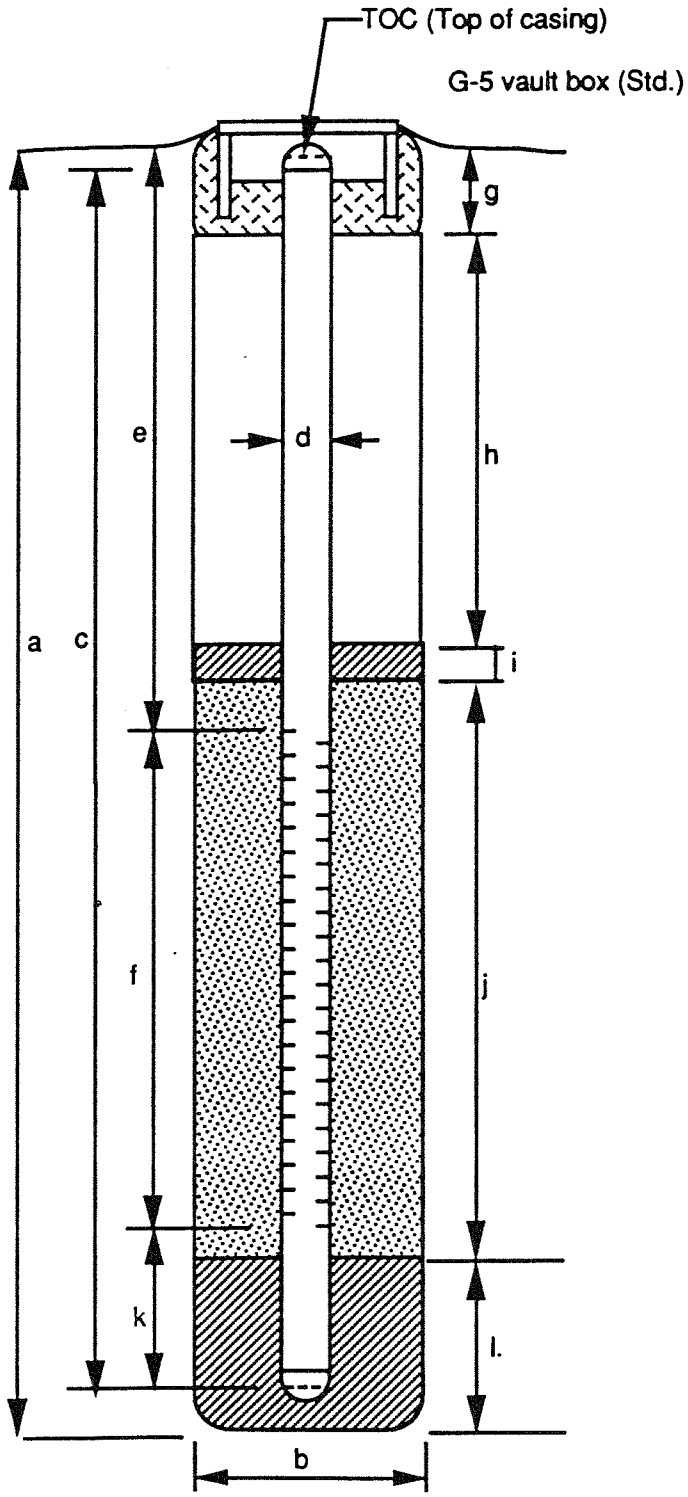

EXPLORATORY BORING

a. Total depth 35.5 ft.
b. Diameter 10 in.
Drilling methods Hollow-stem auger & air rotary casing advance. (See remark on Exp. log.)

WELL CONSTRUCTION

c. Total casing length 32.6 ft.
Material Schedule 40 PVC
d. Diameter 4 in.
e. Depth to top perforations 10.8 ft.
f. Perforated length 18.9 ft.
Perforated interval from 10.8 to 29.7 ft.
Perforation type Circumslot
Perforation size 0.020 in.
g. Surface seal (0 - 1.5') 1.5 ft.
Material Concrete
h. Backfill (1.5 - 8.0') 6.5 ft.
Material 5% bentonite/cement grout
i. Seal (8.0 - 9.0') 1.0 ft.
Material Bentonite pellets
j. Gravel pack 21.0 ft.
Gravel pack interval from 9.0 to 30.0 ft.
Material Lonestar #2/12 sand
k. Sump (29.7 - 33.0') 3.3 ft.
Material Schedule 40 PVC
l. Bottom Seal (30.0 - 35.5') 5.5 ft.
Material Bentonite chips

Well installed by AJW

LOG OF EXPLORATORY BORING

PROJECT NUMBER 377-02.90 | BORING NO. S-139A
PROJECT NAME Signetics Company | PAGE 1 OF 4
BY A. Waldman | DATE 11/4/91 | SURFACE ELEV. 42.95 ft.

Recovery (ft/ft)	PID (ppm)	Pocket Penetrometer (tsf)	GROUND WATER LEVELS	DEPTH IN FT.	SAMPLES	LITHOGRAPHIC COLUMN	DESCRIPTION	WELL DETAIL
							ASPHALT	
							FILL, GRAVEL BASE MATERIAL	
1.4/1.5	0	>4.5					CLAY (CH), black (2.5Y, N2/0); high-plasticity fines; trace fine sand; trace fine gravel; abundant rootlets; disseminated caliche; crumbles easily; hard; damp.	
0.3/1.5							@4.0': dark gray (10YR, 4/1); trace rootlets.	
1.5/1.5	0			5			CLAY (CL), dark gray (10YR, 4/1); medium-plasticity fines; trace fine sand; very abundant caliche (up to 50% of sample); hard; dry to damp.	
1.5/1.5							@5.5': grayish brown (10YR, 5/2).	
1.5/1.5	0						SILTY SAND (SM), 20% low-plasticity fines; 75% fine to coarse sand (f:m:c=2:1:1); 5% fine gravel; dry.	
				10			SAND TO SILTY SAND (SP-SM), dark grayish brown (10YR, 4/2); 10% non-plastic fines; 65% fine to coarse sand (f:m:c=1:1:1); 25% fine gravel; damp.	

EMCON ASSOCIATES

REMARKS

Boring drilled with 8-inch-diameter hollow-stem augers on 11/4/91 then reamed with a 10-inch-diameter tricone bit on 11/12/91 using air-rotary casing hammer equipment. Boring sampled continuously with a 1.5-foot-long sampler (2.5"ID). Boring converted to a 4-inch-diameter PVC extraction well on 11/12/91. Well construction information presented in attached Well Details and shown graphically on this log. See attached explanation sheet.

LOG OF EXPLORATORY BORING

PROJECT NUMBER 377-02.90 | BORING NO. S-139A

PROJECT NAME Signetics Company | PAGE 2 OF 4

BY A. Waldman | DATE 11/4/91 | SURFACE ELEV. 42.95 ft.

Recovery (ft/ft)	PID (ppm)	Pocket Penetrometer (tsf)	GROUND WATER LEVELS	DEPTH IN FT.	SAMPLES	LITHOGRAPHIC COLUMN	DESCRIPTION	WELL DETAIL
1.5/1.5							SAND TO SILTY SAND (SP-SM), continued.	
1.5/1.5	77						@12.0': 0.3-foot-thick clayey sand lens; moist.	
1.5/1.5							SILTY SAND (SM), dark grayish brown (2.5Y, 4/2); 30% non-plastic fines; 70% fine to coarse sand; damp.	
							@13.5': 15% non-plastic fines; 85% fine sand.	
1.5/1.5	2400	0.8	11/4/91 ▽	15			SANDY CLAY (CL), dark gray (2.5Y, N4/0) to dark grayish brown (2.5Y, 4/2); 75% low- to medium-plasticity fines; 25% fine to coarse sand (f:m:c=3:3:1); rootholes and rootlets; firm; wet.	
1.5/1.5			12/23/91 ▼					
							@17.0': 2-foot-thick caliche zone.	
1.5/1.5								
1.5/1.5		1.8		20			@19.0': very silty; 40% fine sand; trace caliche; stiff.	

EMCON ASSOCIATES

REMARKS

Boring drilled with 8-inch-diameter hollow-stem augers on 11/4/91 then reamed with a 10-inch-diameter tricone bit on 11/12/91 using air-rotary casing hammer equipment. Boring sampled continuously with a 1.5-foot-long sampler (2.5"ID). Boring converted to a 4-inch-diameter PVC extraction well on 11/12/91. Well construction information presented in attached Well Details and shown graphically on this log. See attached explanation sheet.

LOG OF EXPLORATORY BORING

PROJECT NUMBER 377-02.90 | BORING NO. S-139A
PROJECT NAME Signetics Company | PAGE 3 OF 4
BY A. Waldman | DATE 11/4/91 | SURFACE ELEV. 42.95 ft.

Recovery (ft/ft)	PID (ppm)	Pocket Penetrometer (tsf)	GROUND WATER LEVELS	DEPTH IN FT.	SAMPLES	LITHOGRAPHIC COLUMN	DESCRIPTION	WELL DETAIL
							SANDY CLAY (CL), continued.	
1.5/1.5							@20.5': trace rootholes and rootlets; firm.	
		0.5						
0.0/1.5								
1.5/1.5							@23.5': 80% medium-plasticity fines, slightly silty; 20% fine sand; stiff.	
		1.2						
1.5/1.5				25			@25.0': gray (2.5Y, N5/0); moderately abundant caliche; firm.	
		0.8						
1.5/1.5							**CLAY (CL)**, dark gray (2.5Y, N4/0); 90% medium plasticity fines; 10% fine sand; abundant caliche nodules (<8mm diameter); stiff; wet.	
		1.5						
1.5/1.5							**SANDY CLAY (CL)**, dark gray (2.5Y, N4/0); 70% medium-plasticity fines; 30% fine sand; wet.	
							@28.3': gray (2.5Y, N4/0); disseminated caliche.	
1.5/1.5								
				30				

EMCON ASSOCIATES

REMARKS

Boring drilled with 8-inch-diameter hollow-stem augers on 11/4/91 then reamed with a 10-inch-diameter tricone bit on 11/12/91 using air-rotary casing hammer equipment. Boring sampled continuously with a 1.5-foot-long sampler (2.5"ID). Boring converted to a 4-inch-diameter PVC extraction well on 11/12/91. Well construction information presented in attached Well Details and shown graphically on this log. See attached explanation sheet.

LOG OF EXPLORATORY BORING

PROJECT NUMBER 377-02.90 | BORING NO. S-139A

PROJECT NAME Signetics Company | PAGE 4 OF 4

BY A. Waldman | DATE 11/4/91 | SURFACE ELEV. 42.95 ft.

Recovery (ft/ft)	PID (ppm)	Pocket Penetrometer (tsf)	GROUND WATER LEVELS	DEPTH IN FT.	SAMPLES	LITHOGRAPHIC COLUMN	DESCRIPTION	WELL DETAIL
	0						**SILTY SAND (SM)**, dark gray (2.5Y, N4/0); 15% non-plastic fines; 85% fine sand, trace medium to coarse sand; wet.	
1.5/1.5		0.2					**SANDY CLAY (CL)**, dark gray (2.5Y, 4/0); 60% medium-plasticity fines; 40% fine to medium sand; wet.	
1.5/1.5		2.0					**CLAYEY SAND (SC)**, dark gray (2.5Y, N4/0); 40% medium-plasticity fines, moderately silty; 60% fine to coarse sand (f:m:c=6:3:1); trace fine gravel; wet.	
0.8/1.5	60						**GRAVELLY SAND TO SILTY SAND (SP-SM)**, dark gray (2.5Y, N4/0); 10% non-plastic fines; 50% fine to coarse sand (f:m:c=1:1:1); 40% fine gravel.	
				35			**SILTY SAND (SM)**, dark grayish brown (2.5Y, 4/2); 30% low-plasticity fines; 70% fine sand; wet.	
							BORING TERMINATED AT 35.5 FEET.	
				40				

EMCON ASSOCIATES

REMARKS

Boring drilled with 8-inch-diameter hollow-stem augers on 11/4/91 then reamed with a 10-inch-diameter tricone bit on 11/12/91 using air-rotary casing hammer equipment. Boring sampled continuously with a 1.5-foot-long sampler (2.5"ID). Boring converted to a 4-inch-diameter PVC extraction well on 11/12/91. Well construction information presented in attached Well Details and shown graphically on this log. See attached explanation sheet.

WELL DETAILS

PROJECT NUMBER 377-02.90
PROJECT NAME Signetics Company
LOCATION 811 E. Arques Ave., Sunnyvale
WELL PERMIT NO. 91W2310

BORING / WELL S-139A
TOP OF CASING ELEV. 42.71'
GROUND SURFACE ELEV. 42.95'
DATUM MSL
INSTALLATION DATE 11/12/91

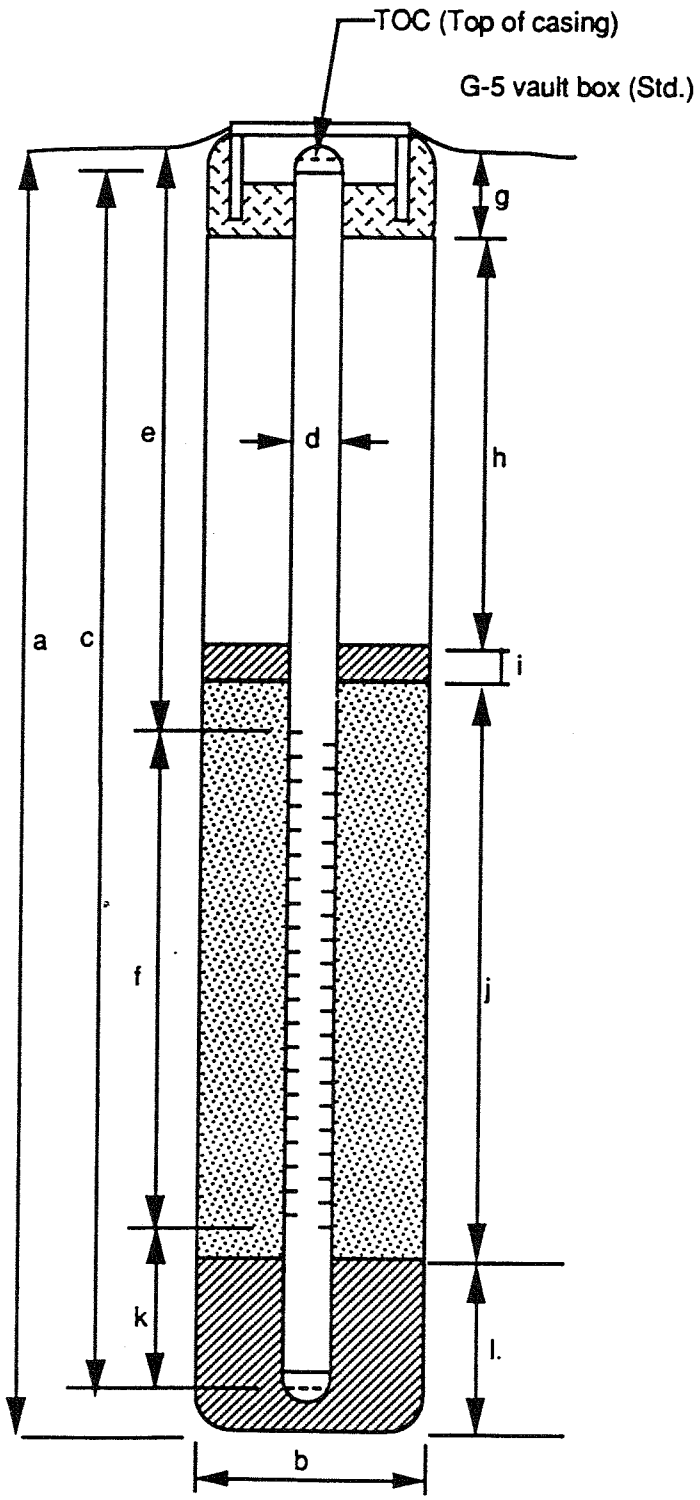

EXPLORATORY BORING

a. Total depth 35.5 ft.
b. Diameter 10 in.
Drilling methods Hollow-stem auger & air rotary casing advance. (See remark on Exp. log.)

WELL CONSTRUCTION

c. Total casing length 28.6 ft.
Material Schedule 40 PVC
d. Diameter 4 in.
e. Depth to top perforations 11.3 ft.
f. Perforated length 14.0 ft.
Perforated interval from 11.3 to 25.3 ft.
Perforation type Circumslot
Perforation size 0.020 in.
g. Surface seal (0 - 1.5') 1.5 ft.
Material Concrete
h. Backfill (1.5 - 8.5') 7.0 ft.
Material 5% bentonite/cement grout
i. Seal (8.5 - 9.5') 1.0 ft.
Material Bentonite pellets
j. Gravel pack 16.0 ft.
Gravel pack interval from 9.5 to 25.5 ft.
Material Lonestar #2/12 sand
k. Sump (25.3 - 28.8') 3.5 ft.
Material Schedule 40 PVC
l. Bottom Seal (25.5 - 35.5') 10.0 ft.
Material Bentonite chips

Well installed by AJW

LOG OF EXPLORATORY BORING

PROJECT NUMBER 377-02.90 | BORING NO. S-140A

PROJECT NAME Signetics Company | PAGE 1 OF 4

BY A. Waldman | DATE 11/5/91 | SURFACE ELEV. 43.16 ft.

Recovery (ft/ft)	PID (ppm)	Pocket Penetrometer (tsf)	GROUND WATER LEVELS	DEPTH IN FT.	SAMPLES	LITHOGRAPHIC COLUMN	DESCRIPTION	WELL DETAIL
							ASPHALT FILL, GRAVEL BASE MATERIAL	
0.3/1.5							CLAY (CH), black (2.5Y, N2/0); high-plasticity fines; trace fine sand; diffuse caliche; trace rootlets; damp.	
1.0/1.5							SILTY CLAY (CL), light brownish gray (10YR, 6/2); 95% low-plasticity fines; 5% fine sand; abundant caliche; dry.	
				5			@5.5': 90% fines; 10% fine sand.	
1.2/1.5	0							
1.5/1.5	0						CLAYEY SAND (SC); 40% low-plasticity fines, very silty; 60% fine to coarse sand; iron-oxide staining; damp.	
1.5/1.5	0						GRAVELLY SAND TO SILTY SAND (SP-SM), dark grayish brown (2.5Y, 4/2); 10% non-plstic fines; 60% fine to coarse sand (f:m:c=1:1:1); 30% fine gravel, trace coarse gravel; iron-oxide staining; damp.	
				10				

EMCON ASSOCIATES

REMARKS

Boring drilled with 8-inch-diameter hollow-stem augers on 11/5/91 then reamed with a 10-inch-diameter tricone bit on 11/14/91 using air-rotary casing hammer equipment. Boring sampled continuously with a 1.5-foot-long sampler (2.5"ID) from a depth of 2.5 feet. Boring converted to a 4-inch-diameter PVC extraction well on 11/14/91. Well construction information presented in Well Details and shown graphically on this log. See attached explanation sheet.

LOG OF EXPLORATORY BORING

PROJECT NUMBER 377-02.90 | BORING NO. S-140A
PROJECT NAME Signetics Company | PAGE 2 OF 4
BY A. Waldman | DATE 11/5/91 | SURFACE ELEV. 43.16 ft.

Recovery (ft/ft)	PID (ppm)	Pocket Penetrometer (tsf)	GROUND WATER LEVELS	DEPTH IN FT.	SAMPLES	LITHOGRAPHIC COLUMN	DESCRIPTION	WELL DETAIL
0.5/1.5							GRAVELLY SAND TO SILTY SAND (SP-SM), continued.	
0.9/1.5	8							
1.3/1.5							SILTY SAND (SM), dark grayish brown (2.5Y, 4/2); 20% non-plastic fines; 80% fine to coarse sand (f:m:c=2:2:1); damp.	
	963						@14.0': 80% fine sand.	
1.5/1.5			11/5/91	15			SANDY CLAY (CL), dark grayish brown (2.5Y, 4/2); 60% medium-plasticity fines, moderately silty; 40% fine sand; moist.	
1.5/1.5		0.5	12/23/91				@15.5': dark gray (2.5Y, N4/0); 65% fines; 35% fine to medium sand; trace coarse sand; trace fine gravel; diffuse caliche; some rootholes; firm; wet.	
1.5/1.5		0.8						
1.5/1.5		1.5		20			@19.0': sand stringers.	

EMCON ASSOCIATES

REMARKS

Boring drilled with 8-inch-diameter hollow-stem augers on 11/5/91 then reamed with a 10-inch-diameter tricone bit on 11/14/91 using air-rotary casing hammer equipment. Boring sampled continuously with a 1.5-foot-long sampler (2.5"ID) from a depth of 2.5 feet. Boring converted to a 4-inch-diameter PVC extraction well on 11/14/91. Well construction information presented in Well Details and shown graphically on this log. See attached explanation sheet.

LOG OF EXPLORATORY BORING

PROJECT NUMBER 377-02.90 | BORING NO. S-140A

PROJECT NAME Signetics Company | PAGE 3 OF 4

BY A. Waldman | DATE 11/5/91 | SURFACE ELEV. 43.16 ft.

Recovery (ft/ft)	PID (ppm)	Pocket Penetrometer (tsf)	GROUND WATER LEVELS	DEPTH IN FT.	SAMPLES	LITHOGRAPHIC COLUMN	DESCRIPTION	WELL DETAIL
							SANDY CLAY (CL), continued.	
							@20.0': nodular caliche; stiff.	
1.5/1.5							@20.5': 35% fine sand.	
		2.0						
							@21.5': nodular caliche absent; stiff to very stiff.	
1.0/1.5								
							@22.5': 0.1-foot-thick silty sand lens.	
0.5/1.5								
		1.2						
1.5/1.5				25			@25.0': 80% fines; 20% fine sand; trace nodular caliche; very soft to soft.	
		0.2						
1.5/1.5								
		1.0					@27.0': firm to stiff.	
1.5/1.5							@28.0': abundant nodular caliche; firm.	
		0.8						
1.5/1.5								
				30				

EMCON ASSOCIATES

REMARKS

Boring drilled with 8-inch-diameter hollow-stem augers on 11/5/91 then reamed with a 10-inch-diameter tricone bit on 11/14/91 using air-rotary casing hammer equipment. Boring sampled continuously with a 1.5-foot-long sampler (2.5"ID) from a depth of 2.5 feet. Boring converted to a 4-inch-diameter PVC extraction well on 11/14/91. Well construction information presented in Well Details and shown graphically on this log. See attached explanation sheet.

LOG OF EXPLORATORY BORING

PROJECT NUMBER 377-02.90 | BORING NO. S-140A

PROJECT NAME Signetics Company | PAGE 4 OF 4

BY A. Waldman | DATE 11/5/91 | SURFACE ELEV. 43.16 ft.

Recovery (ft/ft)	PID (ppm)	Pocket Penetrometer (tsf)	GROUND WATER LEVELS	DEPTH IN FT.	SAMPLES	LITHOGRAPHIC COLUMN	DESCRIPTION	WELL DETAIL
							SILTY SAND (SM), dark gray (2.5Y, N4/0); 45% low-plasticity fines; 55% fine sand; wet.	
1.3/1.5							SANDY CLAY (CL), dark gray (2.5Y, N4/0); 75% medium-plasticity fines; 25% fine sand, trace coarse sand; moist to wet.	
1.2/1.5		2.0					CLAYEY SAND (SC), 30% medium-plasticity fines; 85% fine to coarse sand; 20% fine gravel; moist to wet.	
							SANDY CLAY (CL), dark gray (2.5Y, N4/0); 75% medium-plasticity fines; 25% fine sand, trace coarse sand; moist to wet.	
1.3/1.5							SANDY GRAVEL TO SILTY GRAVEL (GP-GM), dark grayish brown (2.5Y, 4/2); 10% non-plastic fines; 40% fine to coarse sand; 50% fine gravel; wet.	
				35			SILTY SAND (SM), dark grayish brown (2.5Y, 4/2); 45% non-plastic fines; 55% fine sand; wet.	
							BORING TERMINATED AT 35.5 FEET.	
				40				

EMCON ASSOCIATES

REMARKS

Boring drilled with 8-inch-diameter hollow-stem augers on 11/5/91 then reamed with a 10-inch-diameter tricone bit on 11/14/91 using air-rotary casing hammer equipment. Boring sampled continuously with a 1.5-foot-long sampler (2.5"ID) from a depth of 2.5 feet. Boring converted to a 4-inch-diameter PVC extraction well on 11/14/91. Well construction information presented in Well Details and shown graphically on this log. See attached explanation sheet.

WELL DETAILS

PROJECT NUMBER 377-02.90
PROJECT NAME Signetics Company
LOCATION 811 E. Arques Ave., Sunnyvale
WELL PERMIT NO. 91W2311

BORING / WELL S-140A
TOP OF CASING ELEV. 42.88'
GROUND SURFACE ELEV. 43.16'
DATUM MSL
INSTALLATION DATE 11/14/91

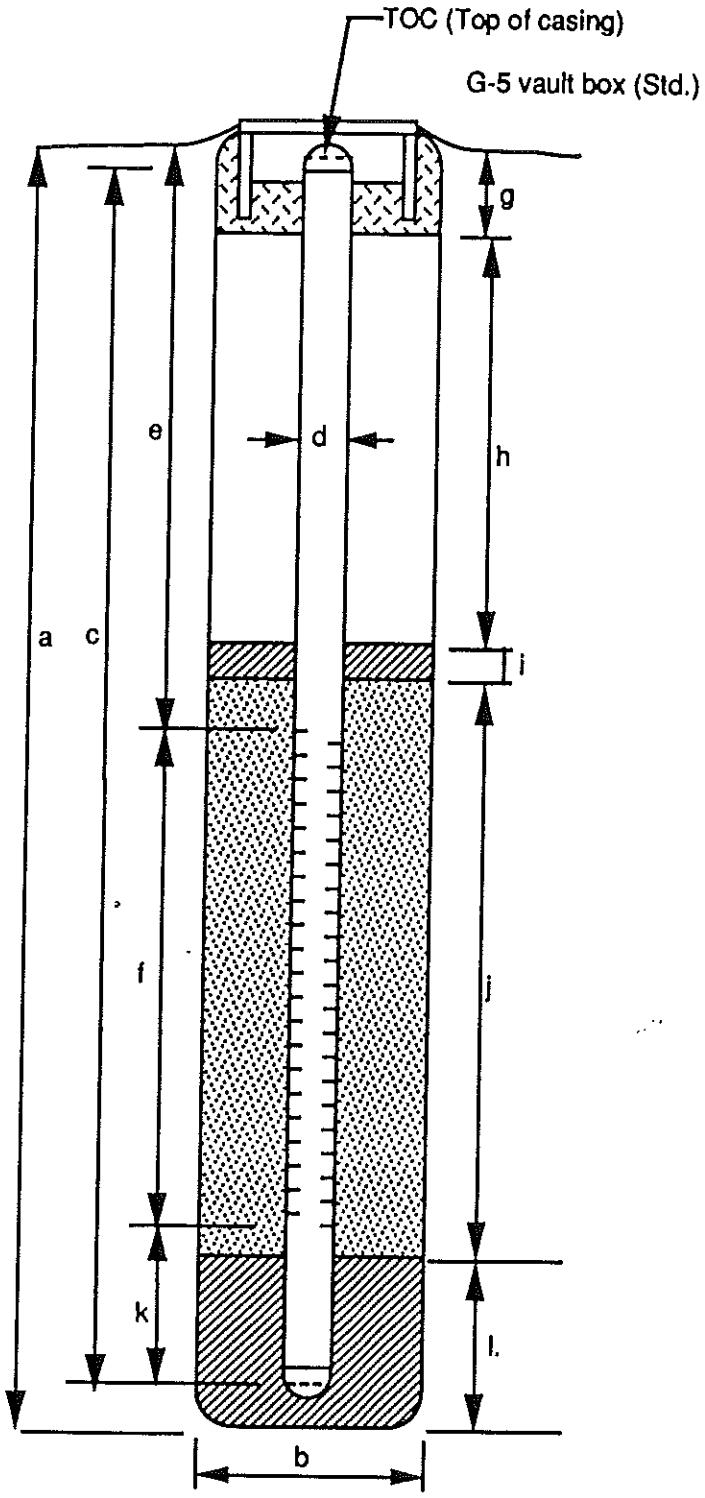

EXPLORATORY BORING

a. Total depth 35.5 ft.
b. Diameter 10 in.
Drilling methods Hollow-stem auger & air rotary casing advance. (See remark on Exp. log.)

WELL CONSTRUCTION

c. Total casing length 29.1 ft.
Material Schedule 40 PVC
d. Diameter 4 in.
e. Depth to top perforations 11.9 ft.
f. Perforated length 14.2 ft.
Perforated interval from 11.9 to 26.1 ft.
Perforation type Circumslot
Perforation size 0.020 in.
g. Surface seal (0 - 1.5') 1.5 ft.
Material Concrete
h. Backfill (1.5 - 8.0') 6.5 ft.
Material 5% bentonite/cement grout
i. Seal (8.0 - 9.0') 1.0 ft.
Material Bentonite pellets
j. Gravel pack 17.5 ft.
Gravel pack interval from 9.0 to 26.5 ft.
Material Lonestar #2/12 sand
k. Sump (26.1 - 29.4') 3.3 ft.
Material Schedule 40 PVC
l. Bottom Seal (26.5- 35.5') 9.0 ft.
Material Bentonite chips

Well installed by AJW

LOG OF EXPLORATORY BORING

PROJECT NUMBER 377-02.90 | BORING NO. S-141A

PROJECT NAME Signetics Company | PAGE 1 OF 4

BY A. Waldman | DATE 11/6/91 | SURFACE ELEV. 42.55 ft.

Recovery (ft/ft)	PID (ppm)	Pocket Penetrometer (tsf)	GROUND WATER LEVELS	DEPTH IN FT.	SAMPLES	LITHOGRAPHIC COLUMN	DESCRIPTION	WELL DETAIL
							ASPHALT	
							FILL, GRAVEL BASE MATERIAL	
1.5/1.5		>4.5					CLAY (CH), black (2.5Y, N2/0); high-plasticity fines; trace fine sand; trace rootlets; damp.	
1.3/1.5	0	4.2					@2.5': very dark grayish brown (10YR, 3/2).	
1.5/1.5		2.8		5			CLAY (CL), brown (7.5YR, 5/2), 95% medium-plasticity fines; 5% fine sand; abundant nodular caliche; hard; damp.	
1.2/1.5	4	2.5					@5.0': very stiff.	
1.5/1.5							SILTY SAND (SM), brown (10YR, 5/3); mottled; 25% non-plastic fines; 75% fine to coarse sand (f:m:c=3:2:1); trace fine gravel; iron-oxide staining; damp.	
1.3/1.5	154			10			CLAYEY SAND (SC); very dark gray brown (10YR, 3/2); 35% medium-plasticity fines; 55% fine to coarse sand (f:m:c=1:1:1); 10% fine gravel; extensive rootlet network; damp.	

EMCON ASSOCIATES

REMARKS

Boring drilled with 8-inch-diameter hollow-stem augers on 11/6/91 then reamed with a 10-inch-diameter tricone bit on 11/15/91 using air-rotary casing hammer equipment. Boring sampled continuously with a 1.5-foot-long sampler (2.5"ID) from a depth of 1 foot. Boring converted to a 4-inch-diameter PVC extraction well on 11/15/91. Well construction information presented in Well Details and shown graphically on this log. See attached explanation sheet.

LOG OF EXPLORATORY BORING

PROJECT NUMBER 377-02.90 | BORING NO. S-141A

PROJECT NAME Signetics Company | PAGE 2 OF 4

BY A. Waldman | DATE 11/6/91 | SURFACE ELEV. 42.55 ft.

Recovery (ft/ft)	PID (ppm)	Pocket Penetrometer (tsf)	GROUND WATER LEVELS	DEPTH IN FT.	SAMPLES	LITHOGRAPHIC COLUMN	DESCRIPTION	WELL DETAIL
1.5/1.5							CLAYEY SAND (SC), continued.	
1.5/1.5							SILTY SAND (SM), dark brown (10YR, 4/3); 15% non-plastic fines; 85% fine to coarse sand (f:m:c=4:1:1); damp.	
	176						SAND TO SILTY SAND (SP-SM), dark brown (10YR, 4/3); 10% non-plastic fines; 80% fine to coarse sand (f:m:c=4:2:1); 10% fine gravel; damp.	
1.5/1.5								
			11/6/91				@14.0': 0.3'-foot-thick silty sand lens; 30% fines; 70% fine sand; damp to moist.	
1.5/1.5			12/23/91	15			CLAY (CL), dark gray (2.5Y, N4/0); 95% medium-plasticity fines, moderately silty; 5% fine to medium sand; diffused caliche; trace carbon-rich organic matter; soft to firm; wet. @16.0': gray (2.5Y, N5/0).	
	1400	0.5						
1.2/1.5								
	1400							
1.2/1.5								
		1.5					SANDY CLAY (CL), gray (2.5Y, N5/0); 60% medium-plasticity fines; 40% fine to coarse sand (f:m:c=1:1:1); trace fine gravel; diffused caliche; stiff; wet.	
0.9/1.5							@18.5': dark gray (2.5Y, N4/0); 35% fine sand. @19.5': nodular caliche abundant.	
				20				

EMCON ASSOCIATES

REMARKS

Boring drilled with 8-inch-diameter hollow-stem augers on 11/6/91 then reamed with a 10-inch-diameter tricone bit on 11/15/91 using air-rotary casing hammer equipment. Boring sampled continuously with a 1.5-foot-long sampler (2.5"ID) from a depth of 1 foot. Boring converted to a 4-inch-diameter PVC extraction well on 11/15/91. Well construction information presented in Well Details and shown graphically on this log. See attached explanation sheet.

LOG OF EXPLORATORY BORING

PROJECT NUMBER 377-02.90 | BORING NO. S-141A

PROJECT NAME Signetics Company | PAGE 3 OF 4

BY A. Waldman | DATE 11/6/91 | SURFACE ELEV. 42.55 ft.

Recovery (ft/ft)	PID (ppm)	Pocket Penetrometer (tsf)	GROUND WATER LEVELS	DEPTH IN FT.	SAMPLES	LITHOGRAPHIC COLUMN	DESCRIPTION	WELL DETAIL
							SANDY CLAY (CL), continued.	
1.5/1.5		0.2					@20.5': nodular caliche absent; trace roots; soft.	
1.5/1.5		0.2					@22.0': 20% fine sand.	
0.6/1.5								
1.5/1.5		0.2		25			@25.0': 45% fine sand, trace medium to coarse sand.	
							@26.0': some caliche nodules.	
0.2/1.5							@27.0': caliche nodules abundant.	
1.5/1.5							SILTY SAND (SM), dark gray (2.5Y, N4/0); 40% slightly-plastic fines; 60% fine sand; wet. @28.7': 20% non-plastic fines; 70% fine to coarse sand; 10% fine gravel. @29.2': 30% fines; 70% fine sand; iron-oxide stains. @29.7': 20% fines; 80% fine to medium sand (f:m=1:1); iron-oxide stains absent.	
1.5/1.5				30				

EMCON ASSOCIATES

REMARKS

Boring drilled with 8-inch-diameter hollow-stem augers on 11/6/91 then reamed with a 10-inch-diameter tricone bit on 11/15/91 using air-rotary casing hammer equipment. Boring sampled continuously with a 1.5-foot-long sampler (2.5"ID) from a depth of 1 foot. Boring converted to a 4-inch-diameter PVC extraction well on 11/15/91. Well construction information presented in Well Details and shown graphically on this log. See attached explanation sheet.

LOG OF EXPLORATORY BORING

PROJECT NUMBER 377-02.90 | BORING NO. S-141A

PROJECT NAME Signetics Company | PAGE 4 OF 4

BY A. Waldman | DATE 11/6/91 | SURFACE ELEV. 42.55 ft.

Recovery (ft/ft)	PID (ppm)	Pocket Penetrometer (tsf)	GROUND WATER LEVELS	DEPTH IN FT.	SAMPLES	LITHOGRAPHIC COLUMN	DESCRIPTION	WELL DETAIL
							SILTY SAND (SM), continued.	
1.5/1.5							SANDY CLAY (CL), dark gray (2.5Y, N4/0); 75% medium-plasticity fines; 25% fine sand; trace roots; caliche; wet.	
							CLAYEY SAND (SC), dark gray (2.5Y, N4/0) 40% medium-plasticity fines; 55% fine to coarse sand, 5% fine gravel; wet.	
0.4/1.5							SILTY SAND (SM), dark grayish brown (2.5Y, 3/2); 35% non-plastic fines; 60% fine to coarse sand (f:m:c=4:2:1); 5% fine gravel; wet.	
1.0/1.5							SAND TO SILTY SAND (SP-SM), grayish brown (2.5Y, 5/2); 10% non-plastic fines; 80% fine to coarse sand (f:m:c=3:3:1); 10% fine gravel; wet.	
	2700			35			SANDY SILT (ML), dark yellowish brown (10YR, 4/4); 70% non-plastic fines; 30% fine sand; wet.	
							BORING TERMINATED AT 35.5 FEET.	
				40				

EMCON ASSOCIATES

REMARKS

Boring drilled with 8-inch-diameter hollow-stem augers on 11/6/91 then reamed with a 10-inch-diameter tricone bit on 11/15/91 using air-rotary casing hammer equipment. Boring sampled continuously with a 1.5-foot-long sampler (2.5"ID) from a depth of 1 foot. Boring converted to a 4-inch-diameter PVC extraction well on 11/15/91. Well construction information presented in Well Details and shown graphically on this log. See attached explanation sheet.

WELL DETAILS

PROJECT NUMBER 377-02.90
PROJECT NAME Signetics Company
LOCATION 811 E. Arques Ave., Sunnyvale
WELL PERMIT NO. 91W2312

BORING / WELL S-141A
TOP OF CASING ELEV. 42.20'
GROUND SURFACE ELEV. 42.55'
DATUM MSL
INSTALLATION DATE 11/15/91

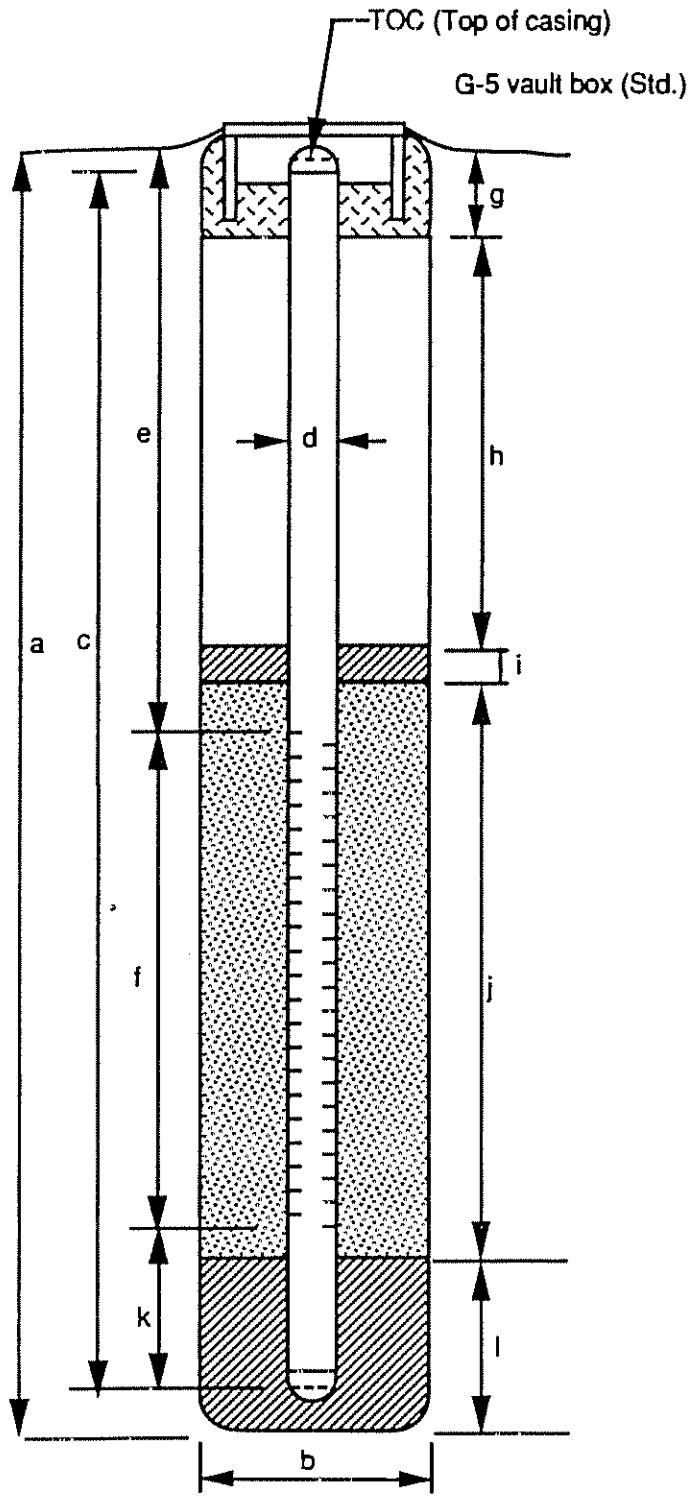

EXPLORATORY BORING

a. Total depth 35.5 ft.
b. Diameter 10 in.
Drilling methods Hollow-stem auger & air rotary casing advance. (See remark on Exp. log.)

WELL CONSTRUCTION

c. Total casing length 28.2 ft.
Material Schedule 40 PVC
d. Diameter 4 in.
e. Depth to top perforations 11.1 ft.
f. Perforated length 14.2 ft.
Perforated interval from 11.1 to 25.3 ft.
Perforation type Circumslot
Perforation size 0.020 in.
g. Surface seal (0 - 1.5') 1.5 ft.
Material Concrete
h. Backfill (1.5 - 7.5') 6.0 ft.
Material 5% bentonite/cement grout
i. Seal (7.5 - 8.5') 1.0 ft.
Material Bentonite pellets
j. Gravel pack 17.0 ft.
Gravel pack interval from 8.5 to 25.5 ft.
Material Lonestar #2/12 sand
k. Sump (25.3 - 28.6') 3.3 ft.
Material Schedule 40 PVC
l. Bottom Seal (25.5 - 35.5') 10.0 ft.
Material Bentonite chips

Well installed by AJW

LOG OF EXPLORATORY BORING

PROJECT NUMBER 377-02.90 | BORING NO. S-143A

PROJECT NAME Signetics Company | PAGE 1 OF 4

BY A. Waldman | DATE 11/4/91 | SURFACE ELEV. 43.12 ft.

Recovery (ft/ft)	PID (ppm)	Pocket Penetrometer (tsf)	GROUND WATER LEVELS	DEPTH IN FT.	SAMPLES	LITHOGRAPHIC COLUMN	DESCRIPTION	WELL DETAIL
							ASPHALT FILL, GRAVEL BASE MATERIAL	
1.5/1.5	0	3.0					CLAY (CH), black (2.5Y, N2/0); high-plasticity fines; trace fine sand; abundant rootlets; disseminated caliche; very stiff; damp.	
1.5/1.5				5			SANDY CLAY (CL), white (10YR; 8/2); 80% medium-plasticity fines; 20% fine to medium sand; caliche very abundant (nodules <15mm diameter); dry to damp.	
1.5/1.5	0							
1.1/1.5							GRAVELLY SAND TO SILTY SAND (SP-SM), brown (10YR, 5/3); 10% non-plastic fines; 70% fine to coarse sand (f:m:c=1:1:1); 20% fine gravel; trace coarse gravel; damp.	
0.6/1.5				10				

EMCON ASSOCIATES

REMARKS

Boring drilled with 8-inch-diameter hollow-stem augers on 11/4/91 then reamed with a 10-inch-diameter tricone bit on 11/13/91 using air-rotary casing hammer equipment. Boring sampled continuously with a 1.5-foot-long sampler (2.5"ID) from a depth of 2.5 feet. Boring converted to a 4-inch-diameter PVC extraction well on 11/13/91. Well construction information presented in Well Details and shown graphically on this log. See attached explanation sheet.

LOG OF EXPLORATORY BORING

PROJECT NUMBER 377-02.90 | BORING NO. S-143A

PROJECT NAME Signetics Company | PAGE 2 OF 4

BY A. Waldman | DATE 11/4/91 | SURFACE ELEV. 43.12 ft.

Recovery (ft/ft)	PID (ppm)	Pocket Penetrometer (tsf)	GROUND WATER LEVELS	DEPTH IN FT.	SAMPLES	LITHOGRAPHIC COLUMN	DESCRIPTION	WELL DETAIL
1.5/1.5	0						SAND TO SILTY SAND (SP-SM), continued.	
							CLAYEY SAND (SC), grayish brown (10YR, 5/2); 40% medium-plasticity fines; 60% fine to coarse sand; trace fine gravel; moist.	
0.7/1.5	41						GRAVELLY SAND TO SILTY SAND (SP-SM), brown (10YR, 5/3); 10% non-plastic fines; 70% fine to coarse sand (f:m:c=1:1:1); 20% fine gravel; trace coarse gravel; damp.	
1.5/1.5			11/4/91				SILTY SAND (SM), dark grayish brown (2.5Y, 4/2); 35% non-plastic fines; 65% fine sand; moist.	
1.5/1.5	704			15			SANDY CLAY (CL), dark gray (2.5Y, N4/0); 80% medium-plasticity fines; 20% fine sand, trace medium to coarse sand; abundant rootlets; wet.	
0.9/1.5			12/23/91					
1.1/1.5							CLAYEY SAND (SC), dark gray (2.5Y, N4/0); 35% medium-plasticity fines; 65% fine to coarse sand (f:m:c=4:1:1); trace fine gravel; wet.	
1.5/1.5							SAND TO SILTY SAND (SP-SM), very dark gray (2.5Y, N3/0); 10% non-plastic fines; 85% fine to coarse sand (f:m:c=2:1:1); 5% gravel; wet.	
				20			SILTY SAND (SM) TO CLAYEY SAND (SC), described on next page.	

EMCON ASSOCIATES

REMARKS

Boring drilled with 8-inch-diameter hollow-stem augers on 11/4/91 then reamed with a 10-inch-diameter tricone bit on 11/13/91 using air-rotary casing hammer equipment. Boring sampled continuously with a 1.5-foot-long sampler (2.5"ID) from a depth of 2.5 feet. Boring converted to a 4-inch-diameter PVC extraction well on 11/13/91. Well construction information presented in Well Details and shown graphically on this log. See attached explanation sheet.

LOG OF EXPLORATORY BORING

PROJECT NUMBER 377-02.90 | BORING NO. S-143A

PROJECT NAME Signetics Company | PAGE 3 OF 4

BY A. Waldman | DATE 11/4/91 | SURFACE ELEV. 43.12 ft.

Recovery (ft/ft)	PID (ppm)	Pocket Penetrometer (tsf)	GROUND WATER LEVELS	DEPTH IN FT.	SAMPLES	LITHOGRAPHIC COLUMN	DESCRIPTION	WELL DETAIL
1.5/1.5							SILTY SAND (SM) TO CLAYEY SAND (SC), continued: very dark gray (2.5Y, N3/0); 35% low-plasticity fines; 65% fine sand; trace medium to coarse sand; wet. @20.5': 45% fines; 55% fine sand; some caliche.	
1.5/1.5		1.5					SANDY CLAY (CL), dark gray (2.5Y, N4/0); 65% low-plasticity fines, moderately silty; 35% fine sand, trace medium to coarse sand; diffuse caliche; some roots; stiff; wet.	
1.5/1.5		0.5					@24.0': soft to firm.	
1.5/1.5		0.5		25				
1.5/1.5		1.0					@27.0': firm to stiff.	
1.5/1.5		1.8						
0.2/1.5				30			@29.5': 0.1-foot thick gravelly sand lens. SILTY SAND (SM), dark gray (2.5Y, N4/0); 30% non-plastic fines; 70% fine sand; wet.	

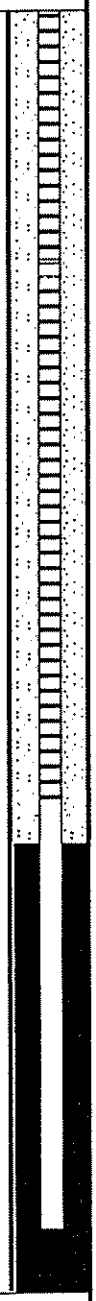

EMCON ASSOCIATES

REMARKS

Boring drilled with 8-inch-diameter hollow-stem augers on 11/4/91 then reamed with a 10-inch-diameter tricone bit on 11/13/91 using air-rotary casing hammer equipment. Boring sampled continuously with a 1.5-foot-long sampler (2.5"ID) from a depth of 2.5 feet. Boring converted to a 4-inch-diameter PVC extraction well on 11/13/91. Well construction information presented in Well Details and shown graphically on this log. See attached explanation sheet.

LOG OF EXPLORATORY BORING

PROJECT NUMBER 377-02.90 | BORING NO. S-143A

PROJECT NAME Signetics Company | PAGE 4 OF 4

BY A. Waldman | DATE 11/4/91 | SURFACE ELEV. 43.12 ft.

Recovery (ft/ft)	PID (ppm)	Pocket Penetrometer (tsf)	GROUND WATER LEVELS	DEPTH IN FT.	SAMPLES	LITHOGRAPHIC COLUMN	DESCRIPTION	WELL DETAIL
							SILTY SAND (SM), continued.	
1.5/1.5		0.5					SANDY CLAY (CL), dark gray (2.5Y, N4/0); 65% low-plasticity fines, moderately silty; 35% fine sand, trace medium to coarse sand; diffuse caliche; some roots; soft to firm; wet.	
1.5/1.5								
1.0/1.5							SILTY SAND (SM), brown (10YR, 5/3); 15% non-plastic fines; 50% fine to coarse sand (f:m:c=1:1:1); 35% fine gravel; wet.	
				35			@34.8': dark gray (2.5Y, N4/0); 25% non-plastic fines 75% fine sand; trace roots; wet.	
							BORING TERMINATED AT 35.5 FEET.	
				40				

REMARKS

Boring drilled with 8-inch-diameter hollow-stem augers on 11/4/91 then reamed with a 10-inch-diameter tricone bit on 11/13/91 using air-rotary casing hammer equipment. Boring sampled continuously with a 1.5-foot-long sampler (2.5"ID) from a depth of 2.5 feet. Boring converted to a 4-inch-diameter PVC extraction well on 11/13/91. Well construction information presented in Well Details and shown graphically on this log. See attached explanation sheet.

EMCON ASSOCIATES

WELL DETAILS

PROJECT NUMBER 377-02.90
PROJECT NAME Signetics Company
LOCATION 811 E. Arques Ave., Sunnyvale
WELL PERMIT NO. 91W2314

BORING / WELL S-143A
TOP OF CASING ELEV. 42.82'
GROUND SURFACE ELEV. 43.12'
DATUM MSL
INSTALLATION DATE 11/13/91

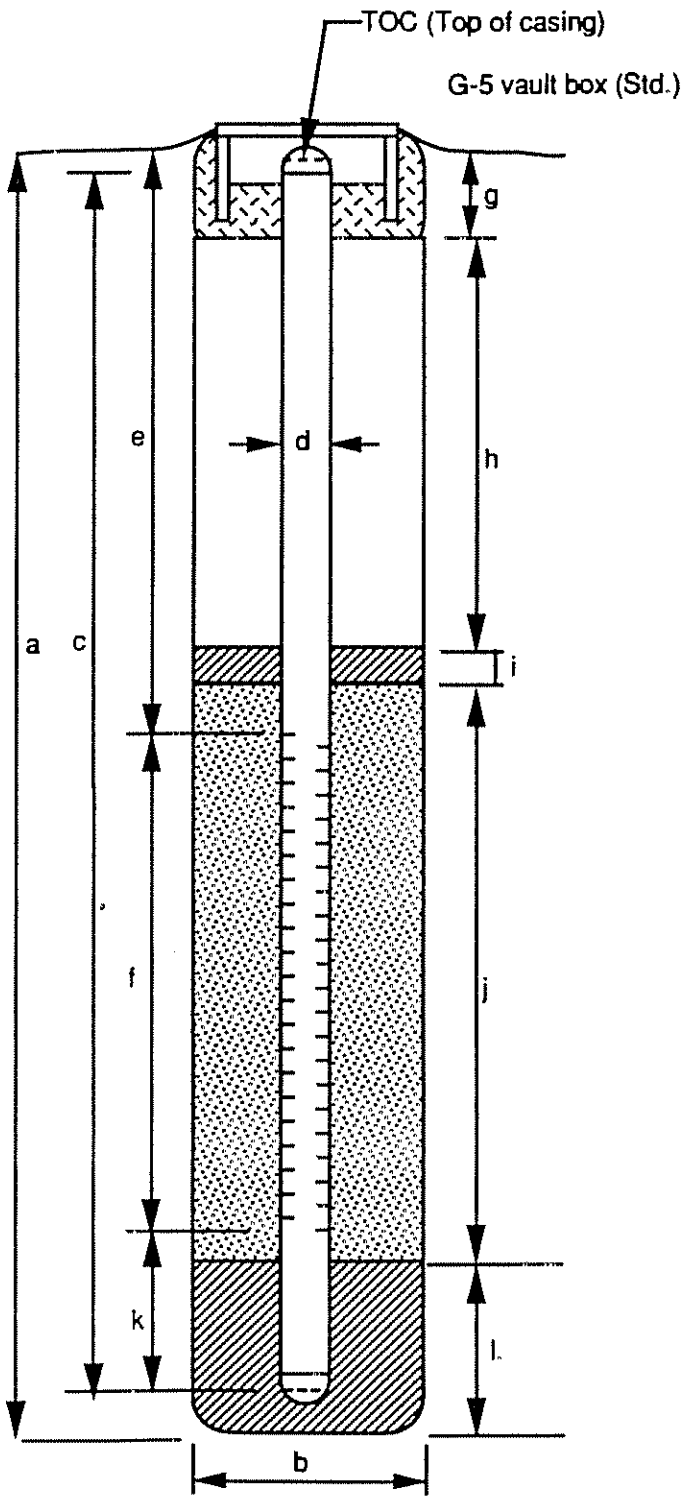

EXPLORATORY BORING

a. Total depth 35.5 ft.
b. Diameter 10 in.
Drilling methods Hollow-stem auger & air rotary casing advance. (See remark on Exp. log.)

WELL CONSTRUCTION

c. Total casing length 29.2 ft.
Material Schedule 40 PVC
d. Diameter 4 in.
e. Depth to top perforations 12.0 ft.
f. Perforated length 14.2 ft.
Perforated interval from 12.0 to 26.2 ft.
Perforation type Circumslot
Perforation size 0.020 in.
g. Surface seal (0 - 1.5') 1.5 ft.
Material Concrete
h. Backfill (1.5 - 9.0') 7.5 ft.
Material 5% bentonite/cement grout
i. Seal (9.0 - 10.0') 1.0 ft.
Material Bentonite pellets
j. Gravel pack 16.5 ft.
Gravel pack interval from 10.0 to 26.5 ft.
Material Lonestar #2/12 sand
k. Sump (26.2 - 29.5') 3.3 ft.
Material Schedule 40 PVC
l. Bottom Seal (26.5 - 35.5') 9.0 ft.
Material Bentonite chips

Well installed by AJW

LOG OF EXPLORATORY BORING

PROJECT NUMBER 377-02.90 | BORING NO. S-145A
PROJECT NAME Signetics Company | PAGE 1 OF 4
BY A. Waldman | DATE 11/7/91 | SURFACE ELEV. 43.3 ft.

Recovery (ft/ft)	PID (ppm)	Pocket Penetrometer (tsf)	GROUND WATER LEVELS	DEPTH IN FT.	SAMPLES	LITHOGRAPHIC COLUMN	DESCRIPTION	WELL DETAIL
							ASPHALT FILL, GRAVEL BASE MATERIAL	
1.4/1.5		2.2					CLAY (CH), black (2.5Y, N2/0); high-plasticity fines; trace fine sand; diffuse caliche; trace rootlets; very stiff; damp.	
1.5/1.5	0	2.0						
1.5/1.5		2.8		5			CLAY (CL), light gray (10YR, 7/2), 95% medium-plasticity fines; 5% fine sand; abundant nodular caliche; stiff to very stiff; damp.	
1.5/1.5	0	2.0					SANDY CLAY (CL), light brownish gray (10YR, 6/2), 80% medium-plasticity fines; 20% fine to coarse sand; abundant nodular caliche (<15mm diameter); stiff to very stiff; damp.	
1.5/1.5							CLAYEY SAND (SC), grayish brown (10YR, 5/2); 45% low- to medium-plasticity fines; 45% fine to coarse sand (f:m:c=3:2:1); 10% fine gravel; damp.	
1.5/1.5	0			10			SAND TO SILTY SAND (SP-SM), grayish brown (2.5Y, 5/2); 10% non-plastic fines; 70% fine to coarse sand (f:m:c=1:1:1); 20% fine gravel; iron-oxide staining; damp.	

EMCON ASSOCIATES

REMARKS

Boring drilled with 8"-diameter hollow-stem augers on 11/7/91 then reamed with a 10"-diameter tricone bit on 11/14/91 using air-rotary casing-hammer equipment. Boring sampled continuously with 1.5'-long samplers (2" & 2.5"ID) from a depth of 1 foot. Boring converted to a 4-inch-diameter PVC extraction well on 11/14/91. Well construction information presented in Well Details and shown graphically on this log. See attached explanation sheet.

LOG OF EXPLORATORY BORING

PROJECT NUMBER 377-02.90 | BORING NO. S-145A
PROJECT NAME Signetics Company | PAGE 2 OF 4
BY A. Waldman | DATE 11/7/91 | SURFACE ELEV. 43.3 ft.

Recovery (ft/ft)	PID (ppm)	Pocket Penetrometer (tsf)	GROUND WATER LEVELS	DEPTH IN FT.	SAMPLES	LITHOGRAPHIC COLUMN	DESCRIPTION	WELL DETAIL
1.5/1.5							SAND TO SILTY SAND (SP-SM), continued.	
1.5/1.5							@11.5': 0.5'-thick clayey sand lens.	
	104						SILTY SAND (SM), olive brown (2.5Y, 4/4); 15% non-plastic fines; 85% fine to medium sand, trace coarse sand; medium dense (20 blows/ft from 12' to 13'); damp.	
1.5/1.5							SILTY GRAVEL (GM), dark grayish brown (2.5Y, 4/2); 20% fines, slightly clayey; 35% fine to coarse sand; 45% fine gravel; medium dense (19 blows/ft from 13.5' to 14.5').	
1.5/1.5							@14.0': 0.3'-thick sandy silt lens.	
				15			CLAY (CL), gray (2.5Y, N5/0); 90% medium-plasticity fines; 10% fine sand; diffused caliche; stiff (10 blows/ft from 15' to 16'); moist to wet.	
	2015							
1.5/1.5		0.5	12/23/91				@16.0': 75% medium-plasticity fines; 18% fine sand, 6% medium sand, 1% coarse sand (percentages from Laboratory Sieve Analysis).	
			11/7/91					
1.2/1.5							@17.5': wet.	
1.5/1.5							CLAYEY SAND (SC), gray (2.5Y, N5/0); 40% medium-plasticity fines; 55% fine sand, 5% medium sand, trace coarse sand; diffuse caliche; wet.	
		1.5		20				

REMARKS

Boring drilled with 8"-diameter hollow-stem augers on 11/7/91 then reamed with a 10"-diameter tricone bit on 11/14/91 using air-rotary casing-hammer equipment. Boring sampled continuously with 1.5'-long samplers (2" & 2.5"ID) from a depth of 1 foot. Boring converted to a 4-inch-diameter PVC extraction well on 11/14/91. Well construction information presented in Well Details and shown graphically on this log. See attached explanation sheet.

EMCON ASSOCIATES

LOG OF EXPLORATORY BORING

PROJECT NUMBER 377-02.90 | BORING NO. S-145A

PROJECT NAME Signetics Company | PAGE 3 OF 4

BY A. Waldman | DATE 11/7/91 | SURFACE ELEV. 43.3 ft.

Recovery (ft/ft)	PID (ppm)	Pocket Penetrometer (tsf)	GROUND WATER LEVELS	DEPTH IN FT.	SAMPLES	LITHOGRAPHIC COLUMN	DESCRIPTION	WELL DETAIL
							CLAYEY SAND (SC), continued.	
1.2/1.5		0.5					SANDY CLAY (CL), gray (2.5Y, N5/0); 70% medium-plasticity fines; 30% fine sand; trace caliche nodules; trace roots; soft to firm; wet.	
1.5/1.5		0.2						
1.5/1.5		0.6					CLAY (CL), gray (2.5Y, N5/0); 95% medium-plasticity fines; 5% fine sand; trace roots; firm; wet.	
	0							
1.5/1.5				25			SANDY CLAY (CL), gray (2.5Y, N5/0); 70% medium-plasticity fines; 30% fine sand; trace caliche nodules; trace roots; soft to firm; wet.	
1.5/1.5							@26.5': 80% medium-plasticity fines; 20% fine sand; abundant nodular caliche.	
1.5/1.5								
1.5/1.5							SILTY SAND (SM) TO SANDY SILT (ML), dark grayish brown (2.5Y, 4/2); 50% low- plasticity fines; 50% fine sand; abundant caliche nodules; wet.	
				30				

EMCON ASSOCIATES

REMARKS

Boring drilled with 8"-diameter hollow-stem augers on 11/7/91 then reamed with a 10"-diameter tricone bit on 11/14/91 using air-rotary casing-hammer equipment. Boring sampled continuously with 1.5'-long samplers (2" & 2.5"ID) from a depth of 1 foot. Boring converted to a 4-inch-diameter PVC extraction well on 11/14/91. Well construction information presented in Well Details and shown graphically on this log. See attached explanation sheet.

LOG OF EXPLORATORY BORING

PROJECT NUMBER 377-02.90 | BORING NO. S-145A
PROJECT NAME Signetics Company | PAGE 4 OF 4
BY A. Waldman | DATE 11/7/91 | SURFACE ELEV. 43.3 ft.

Recovery (ft/ft)	PID (ppm)	Pocket Penetrometer (tsf)	GROUND WATER LEVELS	DEPTH IN FT.	SAMPLES	LITHOGRAPHIC COLUMN	DESCRIPTION	WELL DETAIL
							SILTY SAND (SM) TO SANDY SILT (ML), continued.	
1.5/1.5							SANDY CLAY (CL), dark gray (2.5Y, N4/0); 60% medium-plasticity fines; 35% fine to coarse sand; 5% fine gravel; trace roots; wet.	
1.5/1.5							CLAYEY SAND (SC), dark gray (2.5Y, N4/0); 40% medium-plasticity fines; 55% fine to coarse sand (f:m:c=1:1:1); 5% fine gravel; wet.	
							SILTY SAND (SM), brown (10YR, 5/3); 15% low-plasticity fines; 70% fine to coarse sand (f:m:c=1:1:1); 5% fine gravel; trace coarse gravel; wet.	
1.5/1.5	6000						@34.5': dense (45 blows/ft from 34.5' to 35.5').	
				35			@35.0': 0.3'-thick silty sand to sandy silt lens. SANDY CLAY (CL), gray (2.5Y, N5/0); 80% medium-plasticity fines; 20% fine sand; wet.	
							BORING TERMINATED AT 35.5 FEET.	
				40				

REMARKS

Boring drilled with 8"-diameter hollow-stem augers on 11/7/91 then reamed with a 10"-diameter tricone bit on 11/14/91 using air-rotary casing-hammer equipment. Boring sampled continuously with 1.5'-long samplers (2" & 2.5"ID) from a depth of 1 foot. Boring converted to a 4-inch-diameter PVC extraction well on 11/14/91. Well construction information presented in Well Details and shown graphically on this log. See attached explanation sheet.

EMCON ASSOCIATES

WELL DETAILS

PROJECT NUMBER 377-02.90
PROJECT NAME Signetics Company
LOCATION 811 E. Arques Ave., Sunnyvale
WELL PERMIT NO. 91W2316

BORING / WELL S-145A
TOP OF CASING ELEV. 42.98'
GROUND SURFACE ELEV. 43.30'
DATUM MSL
INSTALLATION DATE 11/14-15/91

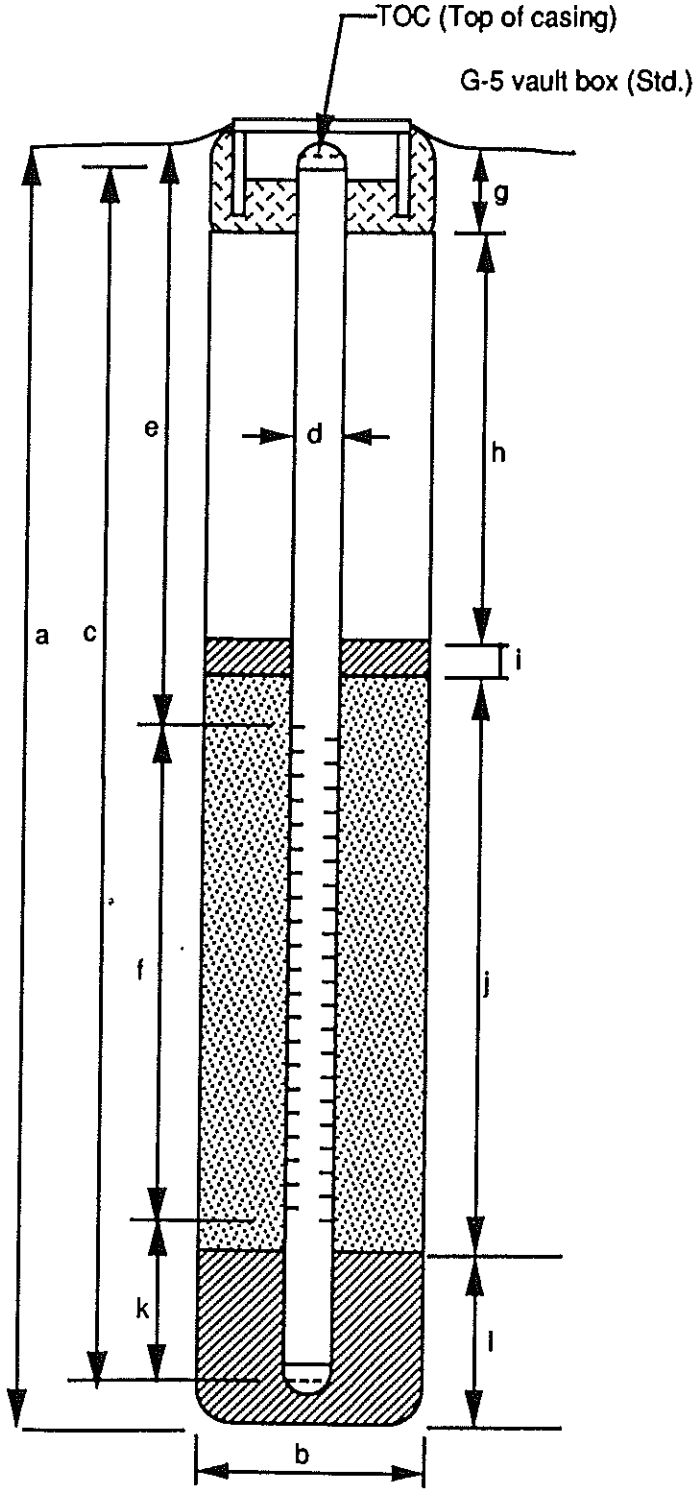

EXPLORATORY BORING

a. Total depth 35.5 ft.
b. Diameter 10 in.
Drilling methods Hollow-stem auger & air rotary casing advance. (See remark on Exp. log.)

WELL CONSTRUCTION

c. Total casing length 28.8 ft.
Material Schedule 40 PVC
d. Diameter 4 in.
e. Depth to top perforations 11.7 ft.
f. Perforated length 14.1 ft.
Perforated interval from 11.7 to 25.8 ft.
Perforation type Circumslot
Perforation size 0.020 in.
g. Surface seal (0 - 1.5') 1.5 ft.
Material Concrete
h. Backfill (1.5 - 8.0') 6.5 ft.
Material 5% bentonite/cement grout
i. Seal (8.0 - 9.0') 1.0 ft.
Material Bentonite pellets
j. Gravel pack 17.0 ft.
Gravel pack interval from 9.0 to 26.0 ft.
Material Lonestar #2/12 sand
k. Sump (25.8 - 29.1') 3.3 ft.
Material Schedule 40 PVC
l. Bottom Seal (26.0 - 35.5') 9.5 ft.
Material Bentonite chips

Well installed by AJW

LOG OF EXPLORATORY BORING

PROJECT NUMBER 377-02.90 | BORING NO. S-146A

PROJECT NAME Signetics Company | PAGE 1 OF 4

BY A. Waldman | DATE 11/7/91 | SURFACE ELEV. 43.05 ft.

Recovery (ft/ft)	PID (ppm)	Pocket Penetrometer (tsf)	GROUND WATER LEVELS	DEPTH IN FT.	SAMPLES	LITHOGRAPHIC COLUMN	DESCRIPTION	WELL DETAIL
							ASPHALT	
							FILL, GRAVEL BASE MATERIAL	
1.5/1.5		3.5					CLAY (CH), black (2.5Y, N2/0); high-plasticity fines; trace fine sand; trace rootlets; diffuse caliche; very stiff; damp.	
1.3/1.5		3.5						
1.5/1.5		2.0		5			SANDY CLAY (CL), brown (7.5YR, 4/2), 80% low-plasticity fines; 20% fine sand; abundant caliche; stiff to very stiff; damp.	
1.4/1.5								
1.5/1.5								
1.0/1.5				10			SILTY SAND (SM), grayish brown (10YR, 5/2); 20% low-plasticity fines; 75% fine to coarse sand (f:m:c=2:2:1); 5% fine gravel; iron-oxide staining; damp.	

EMCON ASSOCIATES

REMARKS

Boring drilled with 8"-diameter hollow-stem augers on 11/7/91 then reamed with a 10"-diameter tricone bit on 11/11/91 using air-rotary casing-hammer equipment. Boring sampled continuously with 1.5'-long samplers (2" & 2.5"ID) from a depth of 1 foot. Boring converted to a 4-inch-diameter PVC extraction well on 11/11/91. Well construction information presented in Well Details and shown graphically on this log. See attached explanation sheet.

LOG OF EXPLORATORY BORING

PROJECT NUMBER 377-02.90 | BORING NO. S-146A

PROJECT NAME Signetics Company | PAGE 2 OF 4

BY A. Waldman | DATE 11/7/91 | SURFACE ELEV. 43.05 ft.

Recovery (ft/ft)	PID (ppm)	Pocket Penetrometer (tsf)	GROUND WATER LEVELS	DEPTH IN FT.	SAMPLES	LITHOGRAPHIC COLUMN	DESCRIPTION	WELL DETAIL
1.3/1.5							**CLAYEY SAND (SC)**, gray (10YR, 5/1); 25% medium-plasticity fines; 50% fine to coarse sand (f:m:c=1:1:1); 20% fine gravel; damp.	
1.5/1.5	220						**SILTY SAND (SM)**, dark grayish brown (10YR, 4/2); 35% non-plastic fines; 65% fine sand; medium dense (14 blows/ft from 12' to 13'); moist.	
1.5/1.5								
1.5/1.5				15			**CLAYEY SAND (SC)**, very dark grayish brown (10YR, 3/0); 25% medium-plasticity fines; 65% fine to coarse sand (f:m:c=1:1:1); 10% fine gravel; damp.	
1.5/1.5	1300						**SANDY CLAY (CL)**, dark gray (2.5Y, N4/0); 80% medium-plasticity fines; 20% fine to medium sand; firm to stiff (8 blows/ft from 15' to 16'); ; moist. @16.0': 70% fines; 30% fine to medium sand; some roots; diffuse caliche.	
			11/7/91				@17.0': 75% fines; 20% fine sand, 4% medium sand, 1% coarse sand (percentages from Laboratory Sieve Analysis).	
1.5/1.5			12/23/91				@17.5': wet.	
							CLAYEY SAND (SC) TO SANDY CLAY (CL), dark gray (2.5Y, N4/0), 50% medium-plasticity fines; 50% fine to medium sand; trace coarse sand; abundant caliche; some roots; stiff; wet.	
1.3/1.5		0.8		20			@19.5': 0.1'-thick silty sand lens.	

REMARKS

Boring drilled with 8"-diameter hollow-stem augers on 11/7/91 then reamed with a 10"-diameter tricone bit on 11/11/91 using air-rotary casing-hammer equipment. Boring sampled continuously with 1.5'-long samplers (2" & 2.5"ID) from a depth of 1 foot. Boring converted to a 4-inch-diameter PVC extraction well on 11/11/91. Well construction information presented in Well Details and shown graphically on this log. See attached explanation sheet.

EMCON ASSOCIATES

LOG OF EXPLORATORY BORING

PROJECT NUMBER 377-02.90 | BORING NO. S-146A

PROJECT NAME Signetics Company | PAGE 3 OF 4

BY A. Waldman | DATE 11/7/91 | SURFACE ELEV. 43.05 ft.

Recovery (ft/ft)	PID (ppm)	Pocket Penetrometer (tsf)	GROUND WATER LEVELS	DEPTH IN FT.	SAMPLES	LITHOGRAPHIC COLUMN	DESCRIPTION	WELL DETAIL
							CLAYEY SAND (SC) TO SANDY CLAY (CL), continued.	
1.5/1.5		1.5						
1.5/1.5		1.0					SANDY CLAY (CL), gray (2.5Y, N5/0); 80% medium-plasticity fines; 20% fine sand; diffused caliche; trace roots; firm to stiff; moist.	
0.7/1.5	930						@24.0': stiff (9 blows/ft from 24' to 25');	
1.5/1.5		1.0		25				
1.5/1.5		0.5					@26.5': gray (2.5Y, N6/0); very abundant nodular caliche.	
1.5/1.5		2.5						
1.5/1.5				30			SILT (ML), dark gray (2.5Y, N4/0); 90% non- to low-plasticity fines; 10% fine sand; stiff to very stiff; moist.	

EMCON ASSOCIATES

REMARKS

Boring drilled with 8"-diameter hollow-stem augers on 11/7/91 then reamed with a 10"-diameter tricone bit on 11/11/91 using air-rotary casing-hammer equipment. Boring sampled continuously with 1.5'-long samplers (2" & 2.5"ID) from a depth of 1 foot. Boring converted to a 4-inch-diameter PVC extraction well on 11/11/91. Well construction information presented in Well Details and shown graphically on this log. See attached explanation sheet.

LOG OF EXPLORATORY BORING

PROJECT NUMBER 377-02.90 | BORING NO. S-146A

PROJECT NAME Signetics Company | PAGE 4 OF 4

BY A. Waldman | DATE 11/7/91 | SURFACE ELEV. 43.05 ft.

Recovery (ft/ft)	PID (ppm)	Pocket Penetrometer (tsf)	GROUND WATER LEVELS	DEPTH IN FT.	SAMPLES	LITHOGRAPHIC COLUMN	DESCRIPTION	WELL DETAIL
		2.0					SILT (ML), continued.	
1.4/1.5		1.5					SANDY CLAY (CL), gray (2.5Y, N5/0) ; 55% medium-plasticity fines; 35% fine to coarse sand (f:m:c=1:1:1); 10% fine gravel; trace roots; some caliche; stiff; moist to wet.	
1.5/1.5		1.5					@33.0': dark gray (2.5Y, N4/0); moderately silty; 70% fines; 30% fine to coarse sand (f:m:c=4:2:1); trace fine gravel.	
1.5/1.5	19	1.5		35			@34.0': 0.2'-thick silty sand lens.	
							BORING TERMINATED AT 35.5 FEET.	
				40				

EMCON ASSOCIATES

REMARKS

Boring drilled with 8"-diameter hollow-stem augers on 11/7/91 then reamed with a 10"-diameter tricone bit on 11/11/91 using air-rotary casing-hammer equipment. Boring sampled continuously with 1.5'-long samplers (2" & 2.5"ID) from a depth of 1 foot. Boring converted to a 4-inch-diameter PVC extraction well on 11/11/91. Well construction information presented in Well Details and shown graphically on this log. See attached explanation sheet.

WELL DETAILS

PROJECT NUMBER 377-02.90
PROJECT NAME Signetics Company
LOCATION 811 E. Arques Ave., Sunnyvale
WELL PERMIT NO. 91W2317

BORING / WELL S-146A
TOP OF CASING ELEV. 42.69'
GROUND SURFACE ELEV. 43.05'
DATUM MSL
INSTALLATION DATE 11/11/91

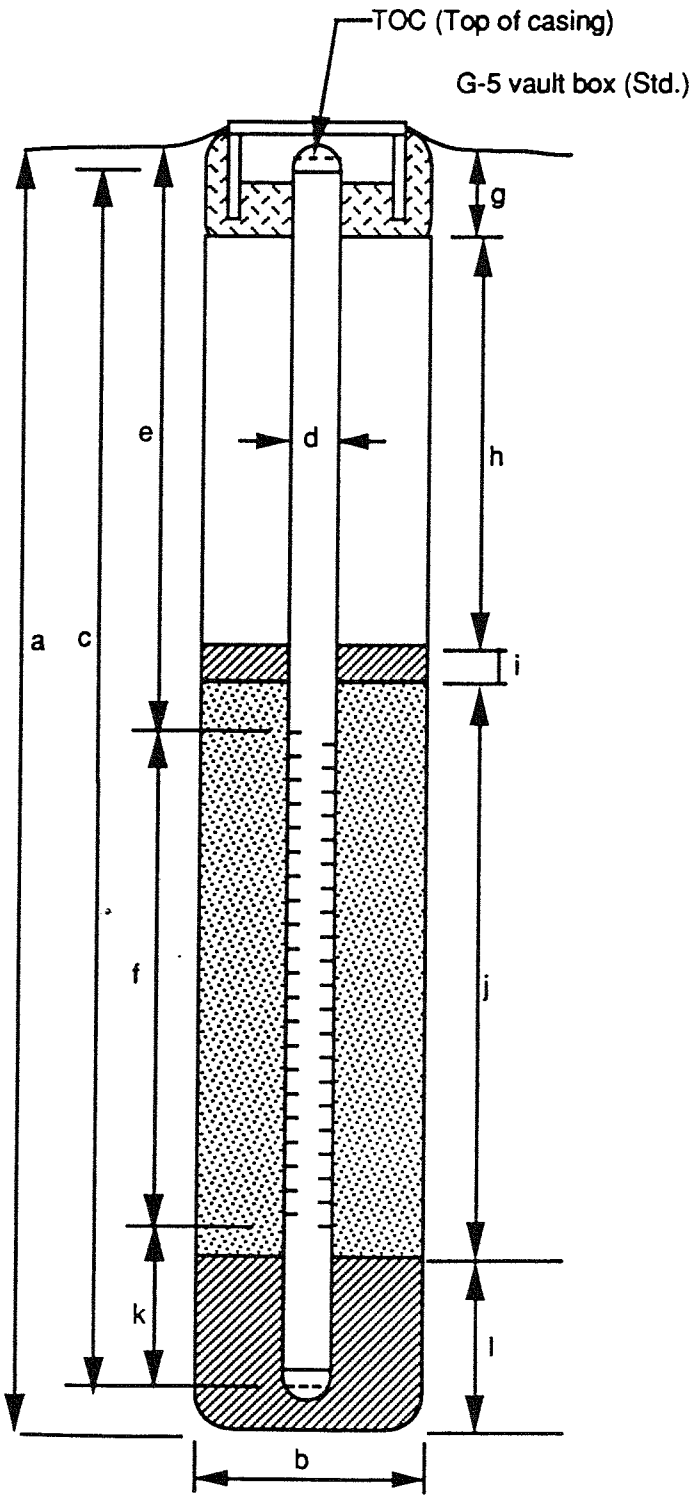

EXPLORATORY BORING

a. Total depth 35.5 ft.
b. Diameter 10 in.
Drilling methods Hollow-stem auger & air rotary casing advance. (See remark on Exp. log.)

WELL CONSTRUCTION

c. Total casing length 32.5 ft.
Material Schedule 40 PVC
d. Diameter 4 in.
e. Depth to top perforations 10.7 ft.
f. Perforated length 18.9 ft.
Perforated interval from 10.7 to 29.6 ft.
Perforation type Circumslot
Perforation size 0.020 in.
g. Surface seal (0 - 1.5') 1.5 ft.
Material Concrete
h. Backfill (1.5 - 8.0') 6.5 ft.
Material 5% bentonite/cement grout
i. Seal (8.0 - 9.0') 1.0 ft.
Material Bentonite pellets
j. Gravel pack 21.2 ft.
Gravel pack interval from 9.0 to 30.2 ft.
Material Lonestar #2/12 sand
k. Sump (29.6 - 32.9') 3.3 ft.
Material Schedule 40 PVC
l. Bottom Seal (30.2 - 35.5') 5.3 ft.
Material Bentonite chips

Well installed by AJW