N:\Design-Drafting\Clients_Q-Z\United Nuclear Corporation\NECR\013-Sheet Set\Hydrocarbon Remediation Work Plan\1011273D006

LOCATION MAP
NOT TO SCALE

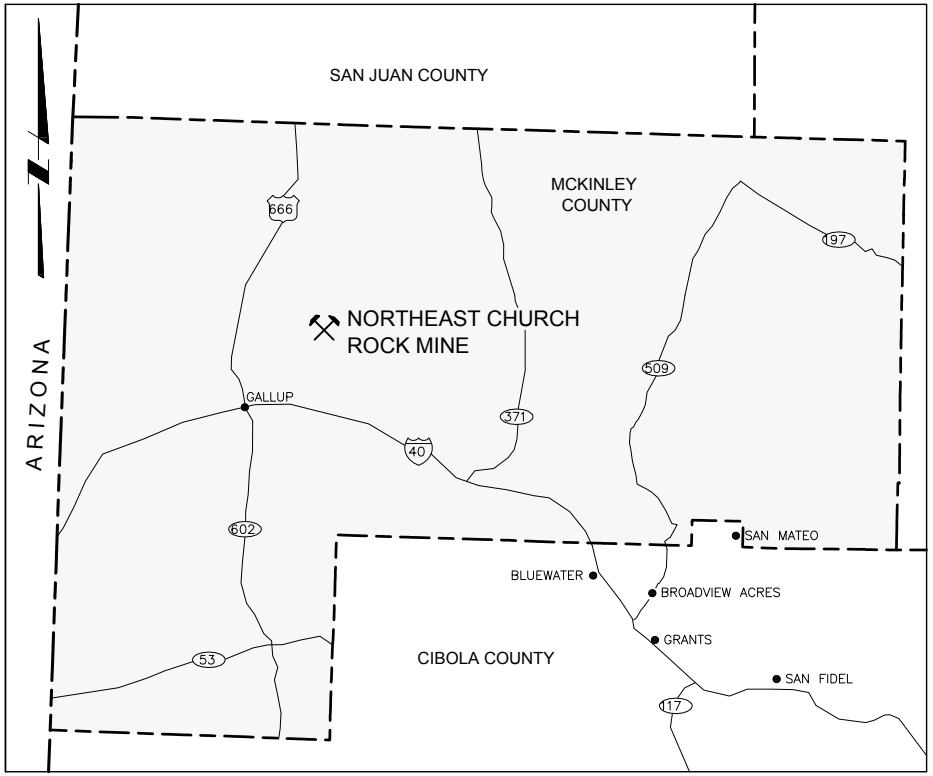

VICINITY MAP
NOT TO SCALE

LIST OF DRAWINGS

No.	TITLE	No.	TITLE
1	SITE LOCATION MAP	8	CROSS-SECTIONS A AND BN INTERVALS
2	SITE LAYOUT	9	TYPICAL MONITORING POINT CONSTRUCTION
3	SUBSURFACE TPH CONCENTRATIONS AND EXTENT OF ACTIVE REMEDIATION	10	PROPOSED BIOVENTING SYSTEM PROCESS AND INSTRUMENTATION DIAGRAM
4	PROPOSED BIOVENTING SYSTEM LAYOUT OVERVIEW	11	PROPOSED BIOVENTING SYSTEM SYMBOLS AND NOMENCLATURE
5	PROPOSED BIOVENTING SYSTEM LAYOUT	12	FENCE DETAILS
6	TRENCHING AND PIPING DETAILS	13	ELECTRICAL DETAILS
7	BIOVENTING WELL DETAILS		

DESIGNED BY	J GARVEY	10/03/12
DRAWN BY	C FOWLER	10/03/12
CHECKED BY	J SMITH	10/03/12
APPROVED BY	J SMITH	10/03/12
PROJECT MANAGER	T LEESON	10/03/12
CLIENT APPROVAL		
CLIENT REFERENCE NO		

PROJECT LOCATION: NORTHEAST CHURCH ROCK MINE

PROJECT: AREA NORTH OF NECR-1 REMEDIATION WORK PLAN

TITLE: SITE LOCATION MAP

MWH

FIGURE: 1

REVISION: 0

FILE NAME: 1011273D006

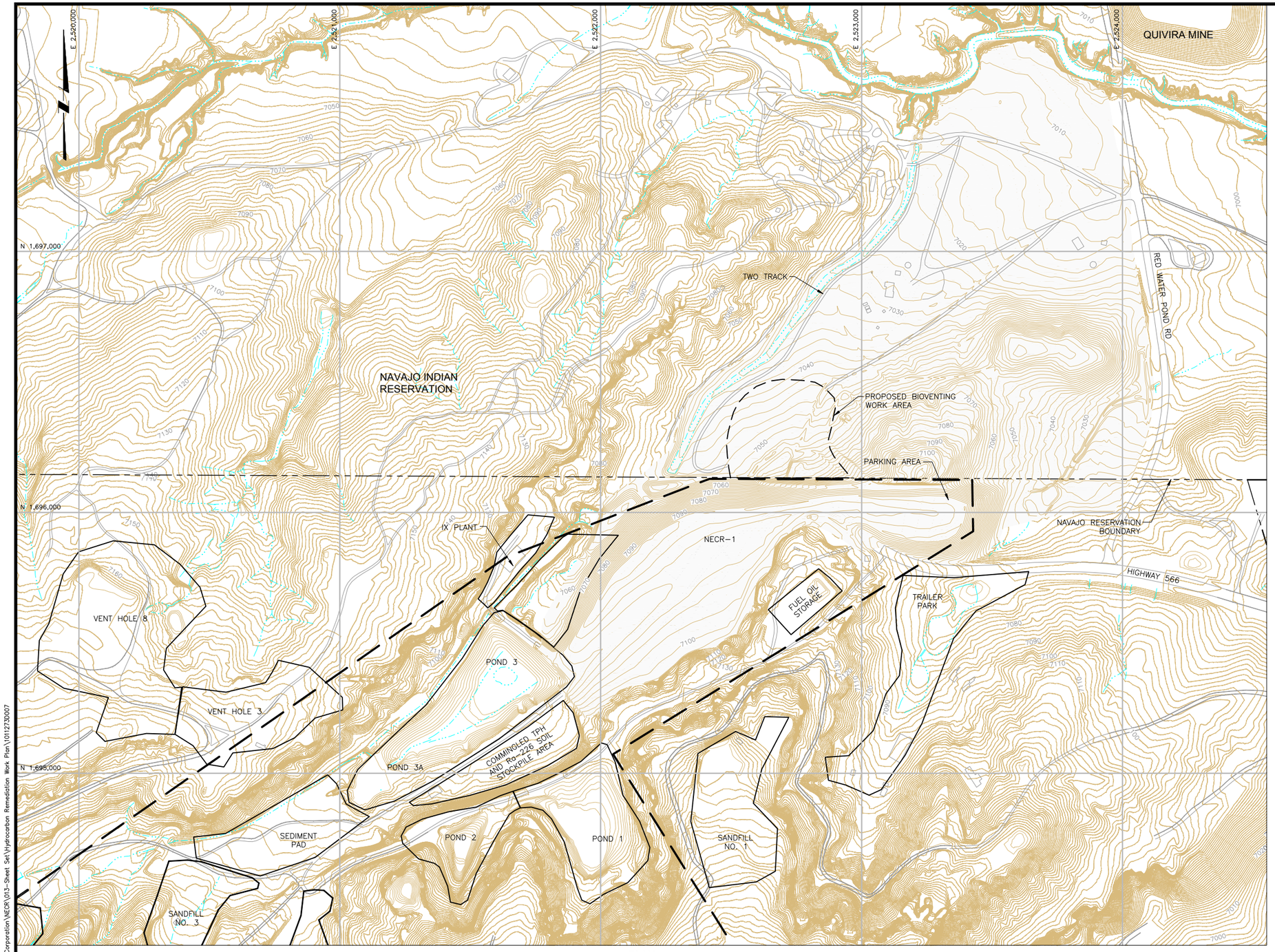

PLAN

SCALE

200' 0 200' 400'

CONTOUR INTERVAL = 2'

LEGEND:

- 7040 GROUND SURFACE CONTOUR & ELEVATION, FEET
- NECR MINE PERMIT BOUNDARY
- FACILITY BOUNDARY
- APPROXIMATE NAVAJO RESERVATION BOUNDARY
- ROADS
- NATURAL DRAINAGE
- PROPOSED BIOVENTING WORK AREA
- PHYSICAL STRUCTURE

ISSUE REV	DESCRIPTION	TECH	ENG	DATE
0	FINAL	CHF	JS	10/03/12

DISCLAIMER:
THIS DRAWING WAS DEVELOPED THROUGH THE APPLICATION OF PROFESSIONAL ENGINEERING SKILL AND PROPRIETARY METHODOLOGIES, PROCESSES, AND KNOW HOW OF MWH AS AUTHOR, ALL PURSUANT TO THE TERMS OF A CONTRACTUAL SCOPE OF WORK GOVERNING ITS PREPARATION. THIS DRAWING MAY NOT BE USED OR MODIFIED OTHER THAN IN STRICT ACCORDANCE WITH THE TERMS OF THE GOVERNING CONTRACT AND SCOPE OF WORK OR OTHERWISE ABSENT THE INVOLVEMENT AND CONSENT OF THE AUTHOR. ANY ALTERATION OR ADAPTATION OF THIS DRAWING SHALL BE CONSISTENT WITH THE AUTHOR'S CONTRACTUAL AND PROPRIETARY RIGHTS AND BE AT USER'S SOLE RISK AND WITHOUT ANY LIABILITY OR LEGAL RESPONSIBILITY OF MWH.

DRAWING REFERENCE(S):
1. ORIGINAL SURFACE TOPOGRAPHY GENERATED FROM AERIAL PHOTOGRAPHS DATED MAY 2007 BY COOPER AERIAL SURVEYS CO. AND USGS 10m DIGITAL ELEVATION MODELS (DEM).
2. FINAL SURFACE TOPOGRAPHY SURVEY DATA PROVIDED BY MORRIS SURVEYING ENGINEERING, LLC, DATED MAY. 2010.

ORIGINAL FILES LOCATED AT: \\USSBS1S01\CAD_ENGINEERING_SUPPORT\DESIGN-DRAFTING\CLIENTS_Q-Z\UNITED NUCLEAR CORPORATION\NECR\009-DRAWINGS FROM SUBCONTRACTORS\NECR IRA ASBUILT SURVEY\96012TOPO3-MAY24.DWG

PROJECTION:
STATE PLANE COORDINATES
ZONE:
NEW MEXICO WEST
DATUM:
NAD 83
UNITS:
US FEET

DESIGNED BY	J GARVEY	10/03/12
DRAWN BY	C FOWLER	10/03/12
CHECKED BY	J GARVEY	10/03/12
APPROVED BY	D CONNER	10/03/12
PROJECT MANAGER	T LEESON	10/03/12
CLIENT APPROVAL		
CLIENT REFERENCE NO.		

PROJECT LOCATION
NORTHEAST CHURCH ROCK MINE

PROJECT
AREA NORTH OF NECR-1 REMEDIATION WORK PLAN

TITLE
SITE LAYOUT

MWH

FIGURE 2

REVISION 0

FILE NAME 1011273D007

N:\Design-Drafting\Clients_Q-Z\United Nuclear Corporation\NECR\013-Sheet Set\Hydrocarbon Remediation Work Plan\1012730007

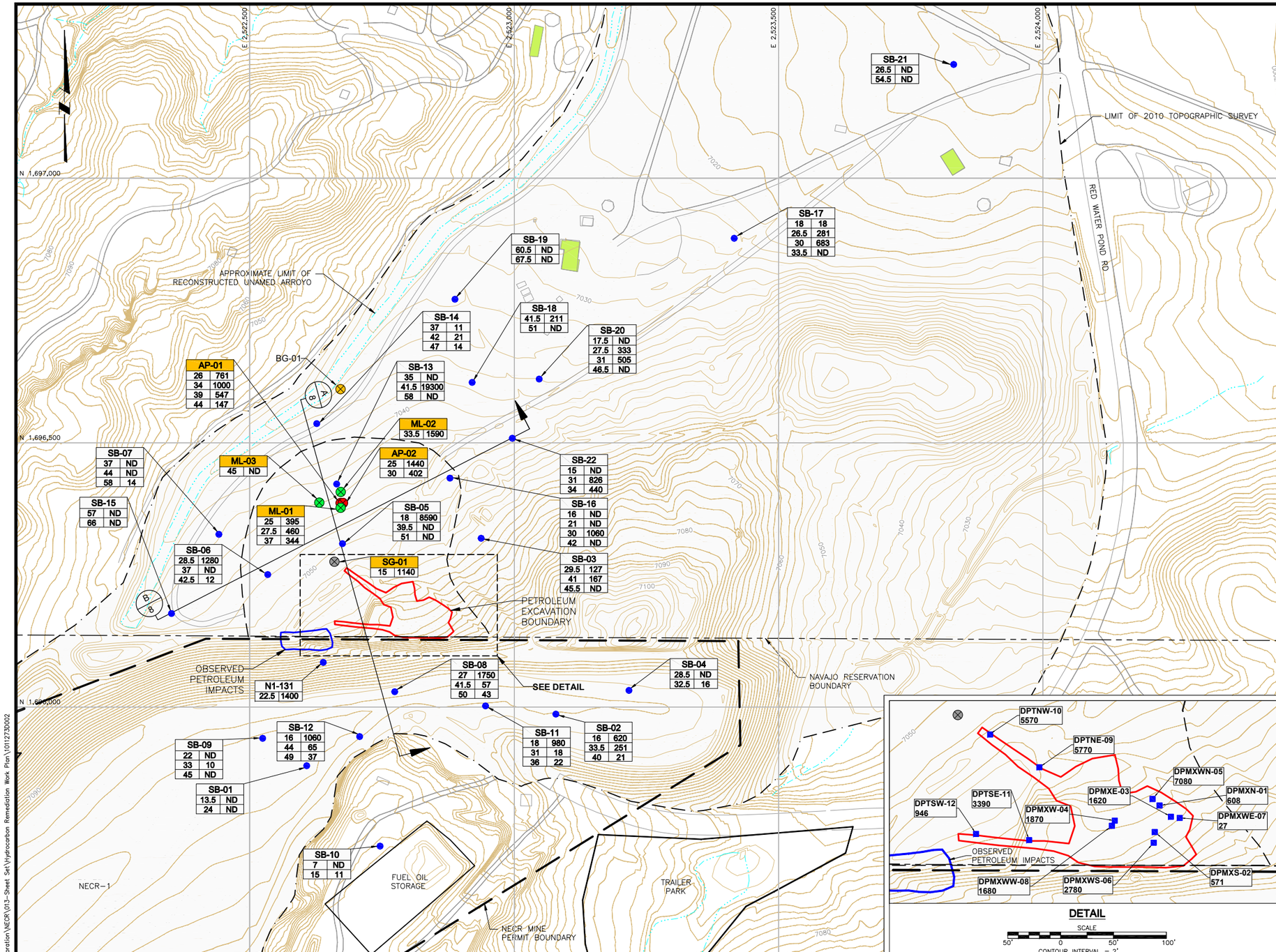

PLAN

SCALE

100' 0 100' 200'

CONTOUR INTERVAL = 2'

LEGEND:

- 7040 — GROUND SURFACE CONTOUR & ELEVATION, FEET
- LIMIT OF 2010 TOPOGRAPHIC SURVEY
- NECR MINE PERMIT BOUNDARY
- FACILITY BOUNDARY
- APPROXIMATE NAVAJO RESERVATION BOUNDARY
- ROADS
- NATURAL DRAINAGE
- PETROLEUM INVESTIGATION EXCAVATION LIMITS
- PETROLEUM IMPACTS OBSERVED DURING IRA
- EXTENT OF ACTIVE REMEDIATION (DRO > 1,000 mg/Kg)
- PHYSICAL STRUCTURE
- RESIDENTIAL AREA
- SB — SOIL BORING
- DPTNE — PETROLEUM EXCAVATION SAMPLE LOCATIONS
- AP — AIR INJECTION POINT
- ML — EXISTING MULTI-LEVEL MONITORING POINT
- SG — SOIL GAS BOREHOLE

SB-04 / 28.5 ND / 32.5 16 — SOIL BORING LOCATION ID, APRIL 2010
- TEPH RESULTS (mg/Kg)
- DEPTH (BELOW GROUND SURFACE, FEET)

ML-03 / 45 ND — SOIL BORING LOCATION ID, OCTOBER 2010
- TPH DRO RESULTS (mg/Kg)
- DEPTH (BELOW GROUND SURFACE, FEET)

ND — NON-DETECT

DPTNW / 5570 — PETROLEUM EXCAVATION SAMPLE LOCATION ID, NOVEMBER 2009
- TEPH RESULTS (mg/Kg)

A / 8 — CROSS SECTION

NOTES:

1. TEPH = TOTAL EXTRACTABLE PETROLEUM HYDROCARBONS (C10-C40).
2. TPH DRO = TOTAL PETROLEUM HYDROCARBONS DIESEL RANGE ORGANICS (C10-C28).

ISSUE REV	DESCRIPTION	TECH	ENG	DATE
0	FINAL	CHF	JS	10/03/12

DISCLAIMER:
THIS DRAWING WAS DEVELOPED THROUGH THE APPLICATION OF PROFESSIONAL ENGINEERING SKILL AND PROPRIETARY METHODOLOGIES, PROCESSES, AND KNOW HOW OF MWH AS AUTHOR, ALL PURSUANT TO THE TERMS OF A CONTRACTUAL SCOPE OF WORK GOVERNING ITS PREPARATION. THIS DRAWING MAY NOT BE USED OR MODIFIED OTHER THAN IN STRICT ACCORDANCE WITH THE TERMS OF THE GOVERNING CONTRACT AND SCOPE OF WORK OR OTHERWISE ABSENT THE INVOLVEMENT AND CONSENT OF THE AUTHOR. ANY ALTERATION OR ADAPTATION OF THIS DRAWING SHALL BE CONSISTENT WITH THE AUTHOR'S CONTRACTUAL AND PROPRIETARY RIGHTS AND BE AT USER'S SOLE RISK AND WITHOUT ANY LIABILITY OR LEGAL RESPONSIBILITY OF MWH.

DRAWING REFERENCE(S):
1. ORIGINAL SURFACE TOPOGRAPHY GENERATED FROM AERIAL PHOTOGRAPHS DATED MAY 2007 BY COOPER AERIAL SURVEYS CO. AND USGS 10m DIGITAL ELEVATION MODELS (DEM).
2. FINAL SURFACE TOPOGRAPHY SURVEY DATA PROVIDED BY MORRIS SURVEYING ENGINEERING, LLC, DATED MAY. 2010.

ORIGINAL FILES LOCATED AT: \\USSBS1S01\CAD_ENGINEERING_SUPPORT\DESIGN-DRAFTING\CLIENTS_Q-Z\UNITED NUCLEAR CORPORATION\NECR\009-DRAWINGS FROM SUBCONTRACTORS\NECR IRA ASBUILT SURVEY\96012TOPO3-MAY 24.DWG

PROJECTION: STATE PLANE COORDINATES
ZONE: NEW MEXICO WEST
DATUM: NAD 83
UNITS: US FEET

DESIGNED BY	J SMITH	10/03/12
DRAWN BY	C FOWLER	10/03/12
CHECKED BY	J SMITH	10/03/12
APPROVED BY	J SMITH	10/03/12
PROJECT MANAGER	T LEESON	10/03/12
CLIENT APPROVAL		
CLIENT REFERENCE NO.		

PROJECT LOCATION: NORTHEAST CHURCH ROCK MINE

PROJECT: AREA NORTH OF NECR-1 REMEDIATION WORK PLAN

TITLE: SUBSURFACE TPH CONCENTRATIONS AND EXTENT OF ACTIVE REMEDIATION

FIGURE: 3

REVISION: 0

FILE NAME: 1011273D002

MWH

N:\Design-Drafting\Clients_Q-Z\United Nuclear Corporation\NECR\013-Sheet Set\Hydrocarbon Remediation Work Plan\1011273D002

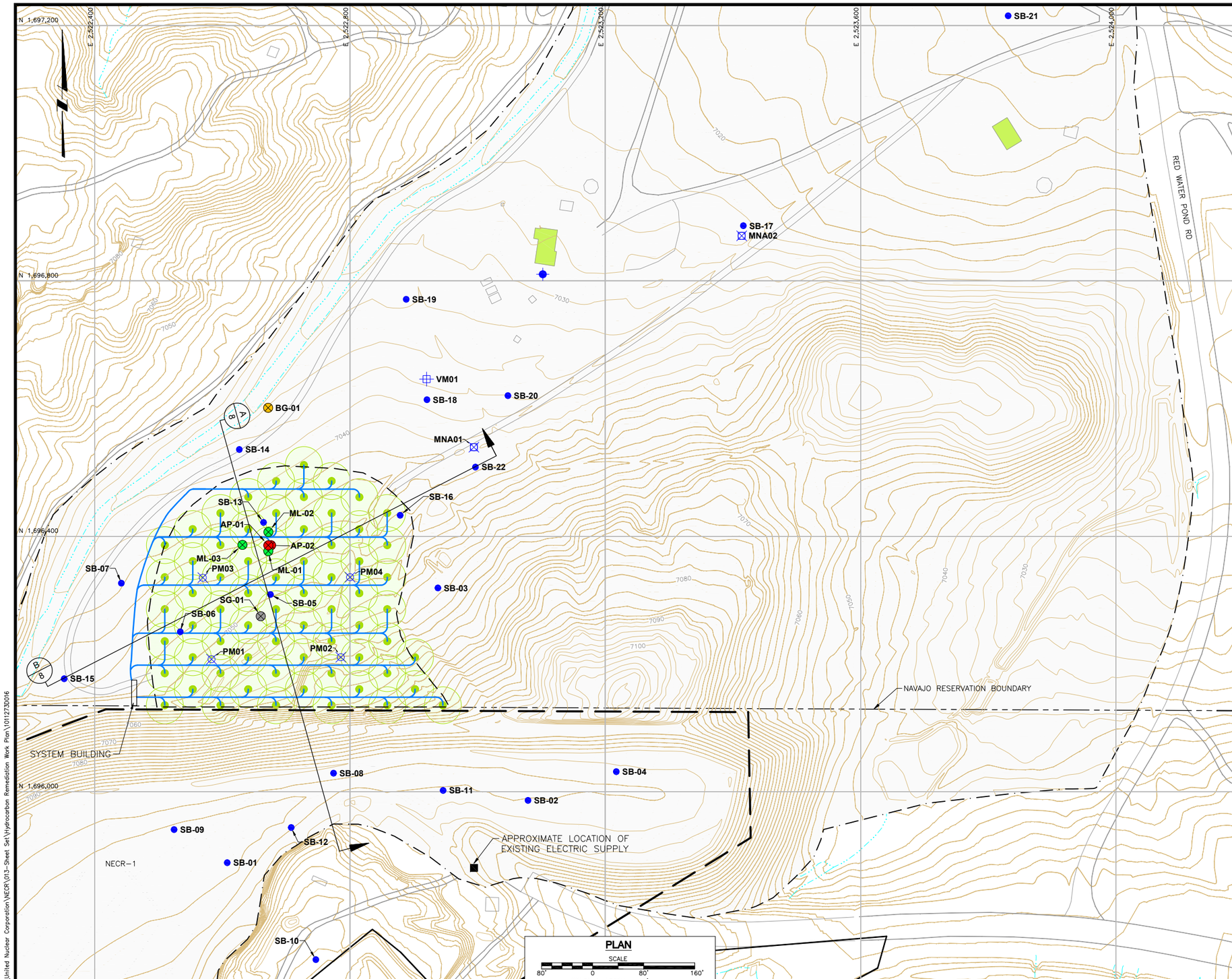

LEGEND:

- 7040 — GROUND SURFACE CONTOUR & ELEVATION, FEET
- LIMIT OF 2010 TOPOGRAPHIC SURVEY
- NECR MINE PERMIT BOUNDARY
- FACILITY BOUNDARY
- APPROXIMATE NAVAJO RESERVATION BOUNDARY
- ROADS
- NATURAL DRAINAGE
- EXTENT OF ACTIVE REMEDIATION (DRO > 1,000 mg/Kg)
- PIPING TRENCH
- PHYSICAL STRUCTURE
- RESIDENTIAL AREA
- SB — SOIL BORING
- AP — AIR INJECTION POINT
- BG — BACKGROUND SOIL GAS
- ML — EXISTING MULTI-LEVEL MONITORING POINT
- SG — SOIL GAS BOREHOLE
- PROPOSED PERFORMANCE MONITORING POINT LOCATION
- VAPOR INTRUSION MONITORING POINT
- PROPOSED VAPOR MIGRATION MONITORING POINT
- MONITORED NATURAL ATTENUATION POINT
- BIOVENTING AIR INJECTION POINT WITH 29-FOOT RADIUS OF INFLUENCE
- A/8 — CROSS SECTION

PLAN

SCALE
80' 0 80' 160'
CONTOUR INTERVAL = 2'

ISSUE REV	DESCRIPTION	TECH	ENG	DATE
0	FINAL	CHF	JS	10/03/12

DISCLAIMER:
THIS DRAWING WAS DEVELOPED THROUGH THE APPLICATION OF PROFESSIONAL ENGINEERING SKILL AND PROPRIETARY METHODOLOGIES, PROCESSES, AND KNOW HOW OF MWH AS AUTHOR, ALL PURSUANT TO THE TERMS OF A CONTRACTUAL SCOPE OF WORK GOVERNING ITS PREPARATION. THIS DRAWING MAY NOT BE USED OR MODIFIED OTHER THAN IN STRICT ACCORDANCE WITH THE TERMS OF THE GOVERNING CONTRACT AND SCOPE OF WORK OR OTHERWISE ABSENT THE INVOLVEMENT AND CONSENT OF THE AUTHOR. ANY ALTERATION OR ADAPTATION OF THIS DRAWING SHALL BE CONSISTENT WITH THE AUTHOR'S CONTRACTUAL AND PROPRIETARY RIGHTS AND BE AT USER'S SOLE RISK AND WITHOUT ANY LIABILITY OR LEGAL RESPONSIBILITY OF MWH.

DRAWING REFERENCE(S):
1. ORIGINAL SURFACE TOPOGRAPHY GENERATED FROM AERIAL PHOTOGRAPHS DATED MAY 2007 BY COOPER AERIAL SURVEYS CO. AND USGS 10m DIGITAL ELEVATION MODELS (DEM).
2. FINAL SURFACE TOPOGRAPHY SURVEY DATA PROVIDED BY MORRIS SURVEYING ENGINEERING, LLC, DATED MAY. 2010.

ORIGINAL FILES LOCATED AT:
\\USSBS1S01\CAD_ENGINEERING_SUPPORT\DESIGN-DRAFTING\CLIENTS_Q-Z\UNITED NUCLEAR CORPORATION\NECR\009-DRAWINGS FROM SUBCONTRACTORS\NECR IRA ASBUILT SURVEY\96012TOP03-MAY 24.DWG

PROJECTION:
STATE PLANE COORDINATES
ZONE:
NEW MEXICO WEST
DATUM:
NAD 83
UNITS:
US FEET

DESIGNED BY	J GARVEY	10/03/12
DRAWN BY	C FOWLER	10/03/12
CHECKED BY	D CONNER	10/03/12
APPROVED BY	J SMITH	10/03/12
PROJECT MANAGER	T LEESON	10/03/12
CLIENT APPROVAL		
CLIENT REFERENCE NO.		

PROJECT LOCATION
NORTHEAST CHURCH ROCK MINE
PROJECT
AREA NORTH OF NECR-1 REMEDIATION WORK PLAN
TITLE
PROPOSED BIOVENTING SYSTEM LAYOUT OVERVIEW

MWH

FIGURE 4
REVISION 0
FILE NAME 1011273D016

N:\Design-Drafting\Clients_Q-Z\United Nuclear Corporation\NECR\013-Sheet Set\Hydrocarbon Remediation Work Plan\1011273D016

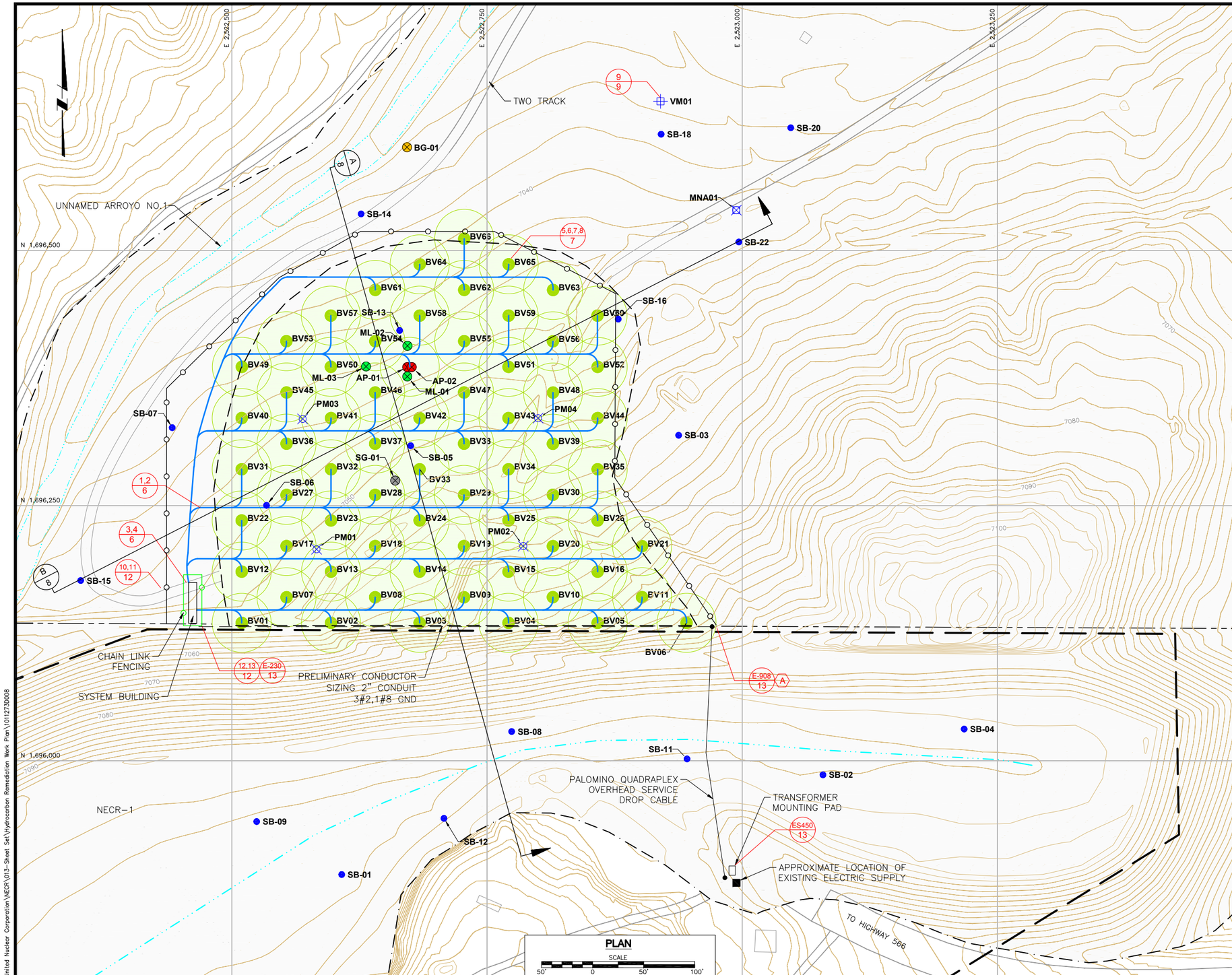

PLAN

SCALE

50' 0 50' 100'

CONTOUR INTERVAL = 2'

LEGEND:

- GROUND SURFACE CONTOUR & ELEVATION, FEET
- LIMIT OF 2010 TOPOGRAPHIC SURVEY
- NECR MINE PERMIT BOUNDARY
- FACILITY BOUNDARY
- APPROXIMATE NAVAJO RESERVATION BOUNDARY
- ROADS
- NATURAL DRAINAGE
- EXTENT OF ACTIVE REMEDIATION (DRO > 1,000 mg/Kg); FENCE PERIMETER
- DRAINAGE CHANNEL
- CHAIN LINK FENCING
- RANGE FENCE
- PHYSICAL STRUCTURE
- SB — SOIL BORING
- AP — AIR INJECTION POINT
- BG — BACKGROUND SOIL GAS
- ML — EXISTING MULTI-LEVEL MONITORING POINT
- SG — SOIL GAS BOREHOLE

PROPOSED DESIGN ELEMENTS

- BIOVENTING PIPING TRENCH
- PROPOSED PERFORMANCE MONITORING POINT LOCATION
- PROPOSED VAPOR MIGRATION MONITORING POINT
- MONITORED NATURAL ATTENUATION POINT
- BIOVENTING AIR INJECTION POINT WITH 29-FOOT RADIUS OF INFLUENCE
- 1,2 / 6 — DETAIL IDENTIFICATION; DRAWING NO. WHERE DETAIL IS ORIGINALLY SHOWN
- A / 8 — CROSS SECTION

NOTES:

1. SEE CONSTRUCTION SPECIFICATIONS FOR MINIMUM OVERHEAD POWER LINE HEIGHT REQUIREMENTS.
2. A – TRANSMISSION FROM OVERHEAD TO UNDERGROUND CONDUIT NEW CONDUIT TO RUN ALONG EXISTING TRENCH.
3. CONTRACTOR TO VERIFY CONDUCTOR SIZES FOR NO MORE THAN 5% VOLTAGE DROP.

ISSUE REV	DESCRIPTION	TECH	ENG	DATE
0	FINAL	CHF	RTL	10/03/12

DISCLAIMER:
THIS DRAWING WAS DEVELOPED THROUGH THE APPLICATION OF PROFESSIONAL ENGINEERING SKILL AND PROPRIETARY METHODOLOGIES, PROCESSES, AND KNOW HOW OF MWH AS AUTHOR, ALL PURSUANT TO THE TERMS OF A CONTRACTUAL SCOPE OF WORK GOVERNING ITS PREPARATION. THIS DRAWING MAY NOT BE USED OR MODIFIED OTHER THAN IN STRICT ACCORDANCE WITH THE TERMS OF THE GOVERNING CONTRACT AND SCOPE OF WORK OR OTHERWISE ABSENT THE INVOLVEMENT AND CONSENT OF THE AUTHOR. ANY ALTERATION OR ADAPTATION OF THIS DRAWING SHALL BE CONSISTENT WITH THE AUTHOR'S CONTRACTUAL AND PROPRIETARY RIGHTS AND BE AT USER'S SOLE RISK AND WITHOUT ANY LIABILITY OR LEGAL RESPONSIBILITY OF MWH.

DRAWING REFERENCE(S):
1. ORIGINAL SURFACE TOPOGRAPHY GENERATED FROM AERIAL PHOTOGRAPHS DATED MAY 2007 BY COOPER AERIAL SURVEYS CO. AND USGS 10m DIGITAL ELEVATION MODELS (DEM).
2. FINAL SURFACE TOPOGRAPHY SURVEY DATA PROVIDED BY MORRIS SURVEYING ENGINEERING, LLC, DATED MAY. 2010.

ORIGINAL FILES LOCATED AT: \\USSBS1S01\CAD_ENGINEERING_SUPPORT\DESIGN-DRAFTING\CLIENTS_Q-Z\UNITED NUCLEAR CORPORATION\NECR\009-DRAWINGS FROM SUBCONTRACTORS\NECR IRA ASBUILT SURVEY\96012TOPO3-MAY 24.DWG

PROJECTION: STATE PLANE COORDINATES
ZONE: NEW MEXICO WEST
DATUM: NAD 83
UNITS: US FEET

DESIGNED BY	D CONNER	10/03/12
DRAWN BY	C FOWLER	10/03/12
CHECKED BY	J SMITH	10/03/12
APPROVED BY	J SMITH	10/03/12
PROJECT MANAGER	T LEESON	10/03/12
CLIENT APPROVAL		
CLIENT REFERENCE NO.		

PROJECT LOCATION: NORTHEAST CHURCH ROCK MINE
PROJECT: AREA NORTH OF NECR-1 REMEDIATION WORK PLAN
TITLE: PROPOSED BIOVENTING SYSTEM LAYOUT

MWH

FIGURE 5 | REVISION 0
FILE NAME 1011273D008

N:\Design-Drafting\Clients_Q-Z\United Nuclear Corporation\NECR\013-Sheet Set\Hydrocarbon Remediation Work Plan\1011273D008

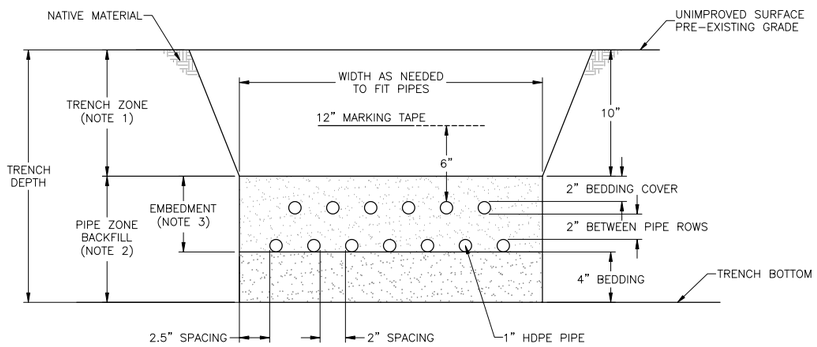

1/5 TYPICAL TRENCH SECTION

N.T.S.

TRENCH SECTION NOTES:

1. TRENCH ZONE BACKFILLED WITH TRENCH SPOILS AND COMPACTED.
2. PIPE ZONE BACKFILLED WITH BEDDING SAND AND COMPACTED.
3. MAINTAIN SEPARATION OF PIPES TO ENSURE ALL VOIDS BETWEEN PIPES ARE FILLED. IF PIPES ARE UNCOVERED AFTER THE 2" COVER, FILL WITH BEDDING SAND UNTIL PIPES ARE COMPLETELY COVERED.
4. TRENCH SIDE WALLS SHALL BE CONSTRUCTED AS STEEP AS POSSIBLE WHILE MAINTAINING WALL INTEGRITY. THEREFORE, TRENCH WIDTH WILL VARY.
5. NUMBER OF PIPES WILL VARY. 13 PIPES SHOWN AS EXAMPLE OF SPACING.

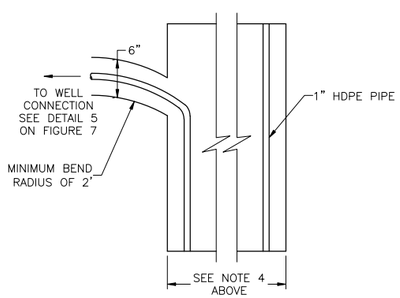

2/5 TYPICAL PIPE TURN TO WELL

N.T.S.

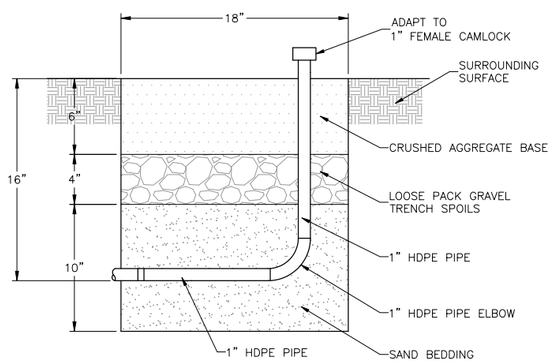

3/5 PIPING STUB-UP CROSS-SECTION

N.T.S.

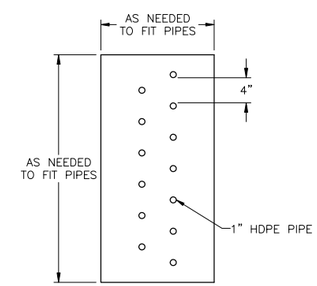

4/5 PIPING STUB-UP PLAN VIEW

N.T.S.

GENERAL NOTES:

CIVIL

1. PROPERTY OWNERSHIP AND BOUNDARIES WERE PROVIDED BY UNITED NUCLEAR CORPORATION AND ARE INDICATED ON THE DRAWINGS BASED ON EXISTING MAPPING AS PROVIDED BY THE OWNER, AND SUBSEQUENT FIELD VERIFICATION AND COMPARISON TO PHYSICAL OCCUPATION. CHANGES IN PROPERTY OWNERSHIP MAY HAVE OCCURRED SINCE THE DATE OF THIS RESEARCH. NEITHER THE OWNER NOR THE ENGINEER GUARANTEES THE ACCURACY OF THE PROPERTY OWNERSHIP INFORMATION.
2. THE CONTRACTOR SHALL TAKE ALL PRECAUTIONARY MEASURES NECESSARY TO PROTECT EXISTING SURFACE AND SUBSURFACE FACILITIES THAT ARE TO REMAIN IN PLACE AND OPERATIONAL FROM DAMAGE. ALL FACILITIES DAMAGED BY THE CONTRACTOR'S OPERATIONS SHALL BE EXPEDITIOUSLY REPAIRED OR RECONSTRUCTED AT THE CONTRACTOR'S EXPENSE WITHOUT ADDITIONAL COMPENSATION.
3. THE CONTRACTOR SHALL PROPERLY DISPOSE OF ALL DEBRIS BROUGHT ONSITE BY THE CONTRACTOR AT THE CONTRACTOR'S EXPENSE.
4. CONTRACTOR SHALL RESTORE ALL SURVEY MONUMENTS THAT ARE DAMAGED OR DESTROYED DURING CONSTRUCTION AS REQUIRED BY STATE LAW.
5. CONTRACTOR IS RESPONSIBLE FOR THE CLEANLINESS AND SAFETY OF ALL ROADWAYS ADJACENT TO THE CONSTRUCTION SITE. IF AT ANY TIME, THESE ROADWAYS ARE FOUND TO BE DANGEROUS OR NOT PASSABLE DUE TO DEBRIS OR MUD, LOCAL JURISDICTIONS MAY SHUT DOWN THE PROJECT UNTIL NECESSARY CLEAN-UP IS CARRIED OUT BY THE CONTRACTOR AT CONTRACTORS EXPENSE. IF CLEAN-UP IS DEEMED TO BE UNSATISFACTORY, LOCAL JURISDICTIONS MAY CARRY OUT REQUIRED CLEAN-UP AND BILL THE CONTRACTOR. THE CONTRACTOR IS REQUIRED TO INCUR THE COST OF ALL SUCH CLEAN-UP.

UTILITIES

1. THE CONTRACTOR SHALL VERIFY ALL LOCATIONS AND ELEVATIONS AND SHALL TAKE ALL PRECAUTIONARY MEASURES NECESSARY TO PROTECT UTILITY LINES WHETHER SHOWN OR NOT. IT SHALL BE THE RESPONSIBILITY OF THE CONTRACTOR TO DETERMINE THE EXACT LOCATION OF ALL UTILITY LINES. THE UTILITY NOTIFICATION CENTER AND AFFECTED UTILITIES SHALL BE NOTIFIED IN ADVANCE A MINIMUM OF TWO FULL BUSINESS DAYS PRIOR TO CONSTRUCTION, NOT INCLUDING DAY OF CALL.
2. PRIOR TO THE START OF CONSTRUCTION, LOCATION OF THE EXISTING UTILITIES IN AND AROUND THE AREA OF CONSTRUCTION SHALL BE VERIFIED BY THE CONTRACTOR. FOR INFORMATION, CONTACT NEW MEXICO ONE CALL SYSTEM, INC., 1-800-321-2537.
3. THE CONTRACTOR SHALL PROTECT ALL EXISTING UTILITIES IN AND AROUND THE AREAS OF WORK.

PIPING

1. THE CONTRACTOR SHALL ADJUST ALL FLUSH MOUNT RING & COVERS TO FINISHED GRADE UNLESS OTHERWISE SHOWN OR SPECIFIED.
2. ALL PIPE TRENCHING, BACKFILL, AND BEDDING SHALL BE IN ACCORDANCE WITH THE DRAWINGS AND SPECIFICATIONS.

GRADING, EROSION, AND SEDIMENT CONTROL (GESC)

1. THE CONTRACTOR IS RESPONSIBLE TO RESTORE ANY DISTURBANCE TO SURFACE FACILITIES. THE CONTRACTOR SHALL COMPLY WITH ALL GRADING, EROSION AND SEDIMENT CONTROL (GESC) PROVISIONS, AS APPROVED BY APPROPRIATE GOVERNING JURISDICTIONS.
2. ALL EXPORTED MATERIAL MUST BE DEPOSITED AT LOCATIONS THAT COMPLY WITH LOCAL AGENCY GESC PROVISIONS.

ADDITIONAL NOTES

1. THE CONTRACTOR SHALL HAVE ONE SIGNED COPY OF THE DRAWINGS, ONE COPY OF THE APPROPRIATE STANDARDS AND SPECIFICATIONS AT THE JOB SITE AT ALL TIMES, AND A COPY OF ANY PERMITS AND EXTENSION AGREEMENTS NEEDED AT THE JOB SITE AT ALL TIMES.
2. ALL MATERIALS AND WORKMANSHIP SHALL BE SUBJECT TO INSPECTION BY THE OWNER. THE OWNER RESERVES THE RIGHT TO ACCEPT OR REJECT ANY MATERIALS AND WORKMANSHIP THAT DOES NOT CONFORM TO THE OWNER'S STANDARDS AND SPECIFICATIONS.

PIPING AND TRENCH DETAIL NOTES

1. PIPING REFERS TO ALL STEEL AND HDPE PIPES.
2. TYPICAL TRENCH SECTIONS ARE TO BE USED ONLY WHERE STABLE, COMPACT SOIL CONDITIONS EXIST. IF BOULDERS OR LARGE OBSTRUCTIONS ARE ENCOUNTERED, TRENCH SECTIONS MAY BE DEEPER OR WIDER THAN SHOWN. THE ENGINEER SHALL BE ADVISED SHOULD THIS OCCUR.
3. THE NEED FOR PROTECTIVE SYSTEMS AND EXCAVATION SLOPES SHALL BE DETERMINED CONSIDERING APPLICABLE LOCAL, STATE AND FEDERAL (OSHA) SAFETY STANDARDS AND REGULATIONS, AND GEOTECHNICAL CONSULTANTS' RECOMMENDATIONS.
4. PROTECTIVE SYSTEMS SHALL BE DESIGNED AND BUILT IN ACCORDANCE WITH THE APPLICABLE LOCAL, STATE AND FEDERAL (OSHA) SAFETY STANDARDS AND REGULATIONS.
5. SUPPORTING DOCUMENTATION SHALL BE SUBMITTED TO THE ENGINEER REGARDING PIPE SHORING SYSTEM DESIGN AND COMPLIANCE WITH APPLICABLE LOCAL, STATE AND FEDERAL (OSHA) SAFETY STANDARDS.
6. UNSUPPORTED VERTICAL AND/OR SLOPING TRENCH WALL SLOPES SHALL NOT BE STEEPER THAN ALLOWED BY APPLICABLE LOCAL, STATE AND FEDERAL (OSHA) SAFETY STANDARDS AND REGULATIONS, UNLESS DOCUMENTATION IS SUBMITTED, ACCORDING TO AFOREMENTIONED SAFETY STANDARDS.
7. TRENCH SECTIONS OTHER THAN THE TYPICAL SECTIONS SHOWN MAY BE UTILIZED PROVIDED THEY COMPLY WITH APPLICABLE LOCAL, STATE AND FEDERAL (OSHA) SAFETY STANDARDS AND REGULATIONS. DOCUMENTATION SUPPORTING THIS COMPLIANCE AND PIPE SHORING SYSTEM DESIGN CALCULATIONS SHALL BE SUBMITTED TO THE ENGINEER.
8. IF OVER-EXCAVATION DUE TO POOR FOUNDATION MATERIAL IS ORDERED BY THE ENGINEER, THE BACKFILL MATERIAL SHALL BE IMPROVED ACCORDING TO THE ENGINEER.

ISSUE REV	DESCRIPTION	TECH	ENG	DATE
0	FINAL	CHF	JS	10/03/12

DISCLAIMER:
THIS DRAWING WAS DEVELOPED THROUGH THE APPLICATION OF PROFESSIONAL ENGINEERING SKILL AND PROPRIETARY METHODOLOGIES, PROCESSES, AND KNOW HOW OF MWH AS AUTHOR, ALL PURSUANT TO THE TERMS OF A CONTRACTUAL SCOPE OF WORK GOVERNING ITS PREPARATION. THIS DRAWING MAY NOT BE USED OR MODIFIED OTHER THAN IN STRICT ACCORDANCE WITH THE TERMS OF THE GOVERNING CONTRACT AND SCOPE OF WORK OR OTHERWISE ABSENT THE INVOLVEMENT AND CONSENT OF THE AUTHOR. ANY ALTERATION OR ADAPTATION OF THIS DRAWING SHALL BE CONSISTENT WITH THE AUTHOR'S CONTRACTUAL AND PROPRIETARY RIGHTS AND BE AT USER'S SOLE RISK AND WITHOUT ANY LIABILITY OR LEGAL RESPONSIBILITY OF MWH.

DESIGNED BY	J GARVEY	10/03/12
DRAWN BY	C FOWLER	10/03/12
CHECKED BY	J SMITH	10/03/12
APPROVED BY	J SMITH	10/03/12
PROJECT MANAGER	T LEESON	10/03/12
CLIENT APPROVAL		
CLIENT REFERENCE NO.		

PROJECT LOCATION: NORTHEAST CHURCH ROCK MINE

PROJECT: AREA NORTH OF NECR-1 REMEDIATION WORK PLAN

TITLE: TRENCHING AND PIPING DETAILS

FIGURE: 6

REVISION: 0

FILE NAME: 1011273D018

MWH

N:\Design-Drafting\Clients_G-Z\United Nuclear Corporation\NECR\013-Sheet Set\Hydrocarbon Remediation Work Plan\1011273D018

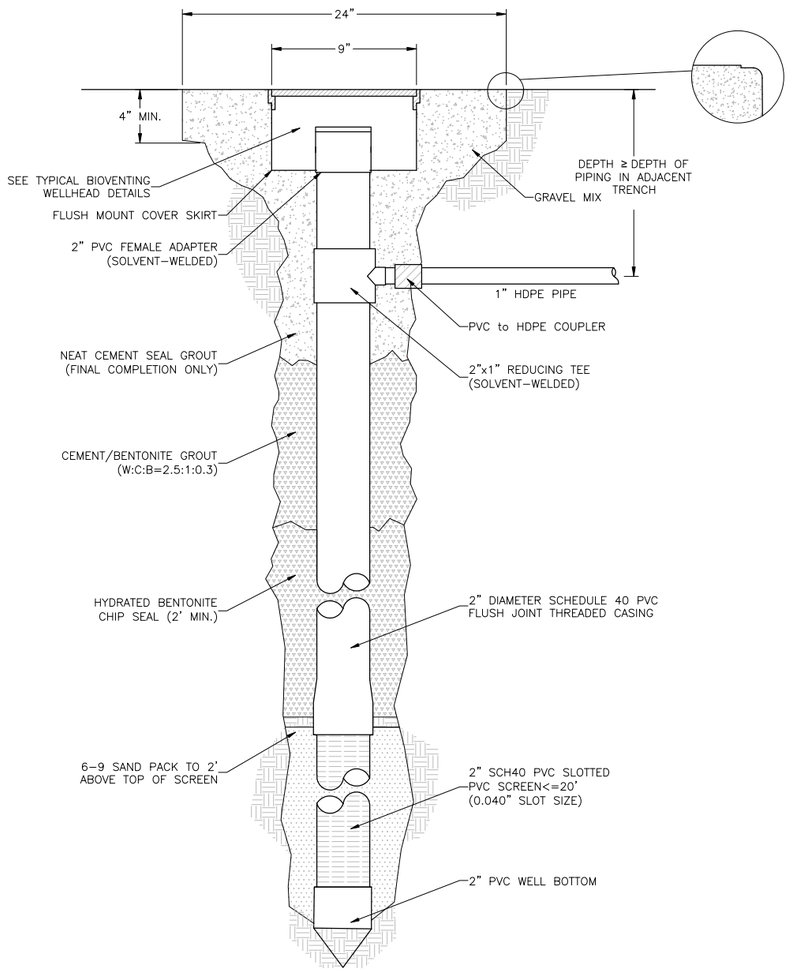

5/5 BIOVENTING WELL

N.T.S.

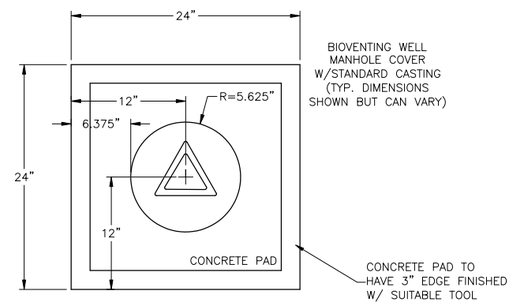

6/5 MANHOLE PLAN VIEW

N.T.S.

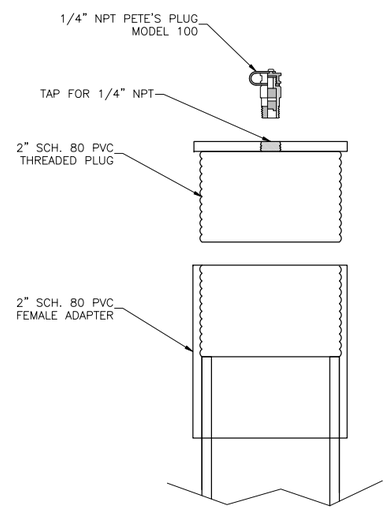

8/5 TYPICAL FINAL BIOVENTING WELLHEAD DETAIL

N.T.S.

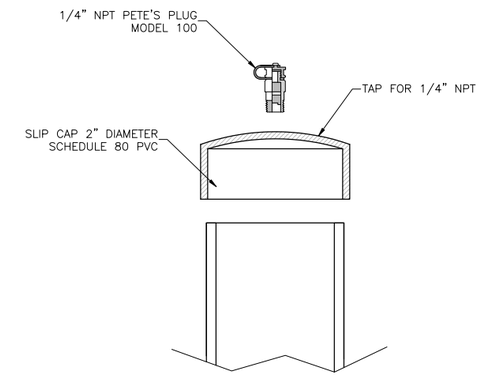

7/5 TYPICAL TEMPORARY BIOVENTING WELLHEAD DETAIL

N.T.S.

DETAIL 5 NOTES:

1. INSTALL WELL PER STATE OF NEW MEXICO.
2. WELL DEPTHS AND SCREENS WILL BE ADJUSTED IN FIELD.
3. PVC SOCKET CONNECTIONS TO BE SOLVENT–WELDED.
4. GROUT MUST HARDEN FOR AT LEAST 7 DAYS PRIOR TO PRESSURRING WELL.
5. 28–DAY COMPRESSIVE STRENGTH OF CEMENT/BENTONITE GROUT SHALL BE AT LEAST 50 PSI.
6. INITIAL COMPLETION SHOULD UTILIZE SOIL OR UNIMPACTED CUTTINGS TO FILL THE LAST 24 INCHES. NEAT CEMENT GROUT WILL BE INSTALLED UPON COMPLETION OF THE PIPING CONNECTION AND COVER.

DETAIL 6 NOTES:

1. CONCRETE SHOULD BE KEPT 2.5" BELOW TOP OF WELL.
2. TOP OF PETE'S PLUG SHOULD BE 2" BELOW LIP OF FLUSH MOUNT COVER.
3. WELL SHOULD BE CENTERED IN SKIRT.
4. ALL COMPONENTS OF LOCKING TOP–ASSEMBLY AND COVER SHOULD BE WASHED OF CEMENT.
5. IN ORDER TO ASSURE PROPER FINISH ON THE CONCRETE, IT IS NECESSARY TO ADD TWO SHOVELS FULL OF PORTLAND CEMENT FOR EACH BAG OF PREMIX, THREE TO FOUR BAGS ARE REQUIRED PER WELL, ADD 5 GALLONS OF WATER PER BAG.
6. CONCRETE TO BE FINISHED WITH WOOD FLOAT & SUITABLE EDGE TOOL.
7. CONCRETE TO BE REINFORCED WITH 3/8" REINFORCING WIRE.
8. CONCRETE PAD TO MATCH EXISTING GRADE W/HIGH POINT AT CENTER OF MANHOLE TO DEFLECT RAIN WATER TOWARDS EDGE.

ISSUE REV	DESCRIPTION	TECH	ENG	DATE
0	FINAL	CHF	JS	10/03/12

DISCLAIMER:
THIS DRAWING WAS DEVELOPED THROUGH THE APPLICATION OF PROFESSIONAL ENGINEERING SKILL AND PROPRIETARY METHODOLOGIES, PROCESSES, AND KNOW HOW OF MWH AS AUTHOR, ALL PURSUANT TO THE TERMS OF A CONTRACTUAL SCOPE OF WORK GOVERNING ITS PREPARATION. THIS DRAWING MAY NOT BE USED OR MODIFIED OTHER THAN IN STRICT ACCORDANCE WITH THE TERMS OF THE GOVERNING CONTRACT AND SCOPE OF WORK OR OTHERWISE ABSENT THE INVOLVEMENT AND CONSENT OF THE AUTHOR. ANY ALTERATION OR ADAPTATION OF THIS DRAWING SHALL BE CONSISTENT WITH THE AUTHOR'S CONTRACTUAL AND PROPRIETARY RIGHTS AND BE AT USER'S SOLE RISK AND WITHOUT ANY LIABILITY OR LEGAL RESPONSIBILITY OF MWH.

DESIGNED BY	J SMITH	10/03/12
DRAWN BY	C FOWLER	10/03/12
CHECKED BY	J SMITH	10/03/12
APPROVED BY	J SMITH	10/03/12
PROJECT MANAGER	T LEESON	10/03/12
CLIENT APPROVAL		
CLIENT REFERENCE NO.		

PROJECT LOCATION: NORTHEAST CHURCH ROCK MINE

PROJECT: AREA NORTH OF NECR-1 REMEDIATION WORK PLAN

TITLE: BIOVENTING WELL DETAILS

FIGURE: 7

REVISION: 0

FILE NAME: 1011273D009

N:\Design–Drafting\Clients_Q–Z\United Nuclear Corporation\NECR\013–Sheet Set\Hydrocarbon Remediation Work Plan\1011273D009

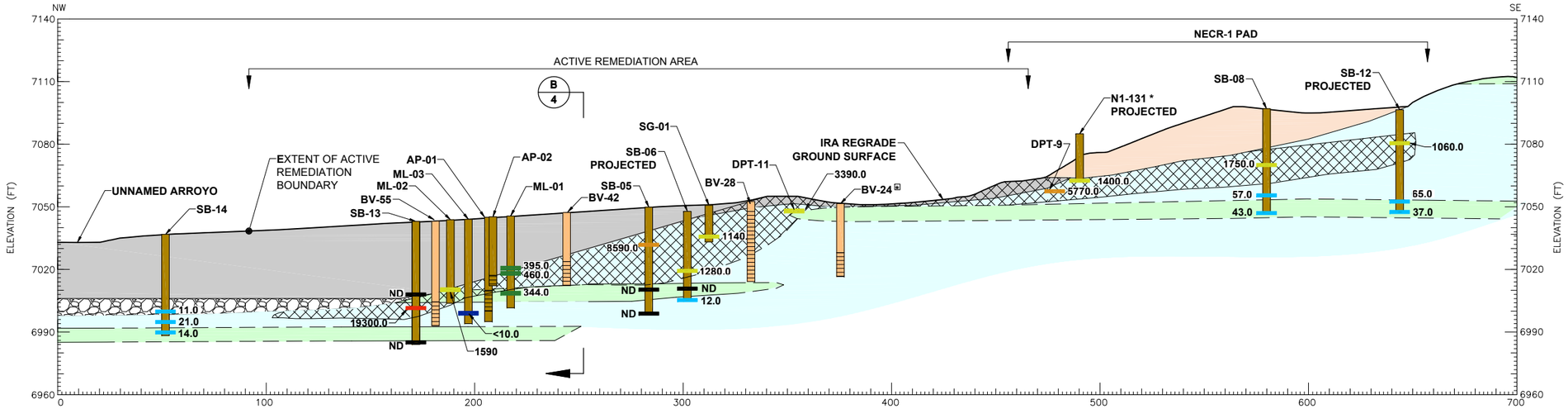

A 4 CROSS SECTION

VERTICAL SCALE 30' 0 30'
HORIZONTAL SCALE 30' 0 30'
VERTICAL EXAGGERATION = 1X

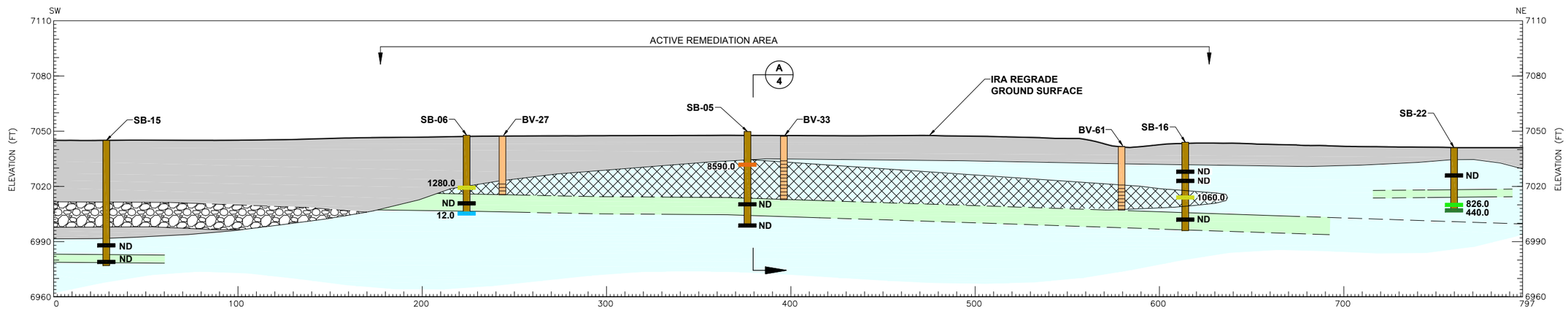

B 4 CROSS SECTION

VERTICAL SCALE 30' 0 30'
HORIZONTAL SCALE 30' 0 30'
VERTICAL EXAGGERATION = 1X

LEGEND:

- BACKFILL – CLAY/SILT/SAND/GROVEL SIZE/MATERIAL/ROUNDED/ANGULAR
- BROWN SILTY SAND/FINE GRAINED/ SOME C. SAND GRAVEL
- GROVEL/COBBLES WITH SAND
- MASSIVE/WELL CEMENTED SANDSTONE/SOME SILTSTONE
- INTERBEDDED/LAMINATED SILTSTONE/MUDSTONE/SANDSTONE/ WEATHERED/OXIDIZED
- ESTIMATED EXTENT OF TPH > 1000 mg/Kg
- APPROXIMATE LITHOLOGIC CONTACT
- SB — SOIL BORING SAMPLE
- DPT-9 — SAMPLE COLLECTED FROM IRA EXCAVATION DRO (mg/Kg)
- * — PROJECTED ONTO CROSS-SECTION
- BV — BIOVENTING AIR INJECTION POINT SAMPLE
- BOREHOLE
- BIOVENTING WELL WITH SCREENED INTERVAL

DRO (mg/Kg)

- NON-DETECT (ND)
- 0.0 – 10.0
- 10.0 – 100.0
- 100.0 – 500.0
- 500.0 – 1000.0
- 1000.0 – 5000.0
- 5000.0 – 10000.0
- 10000.0 – 20000.0

NOTES:

1. PROJECTED BORINGS NOT USED FOR CROSS-SECTION GEOLOGY.
2. BORINGS SHOWN ABOVE OR BELOW GROUND SURFACE WERE PROTECTED FROM AREAS WITH DIFFERENT GROUND SURFACE ELEVATIONS.
3. BORING N1-131 DRILLED ON PRE-IRA GROUND SURFACE DURING REMOVAL SITE EVALUATION (MWH, 2007).
4. ⊠ POTENTIAL PETROLEUM IMPACTS TO BEDROCK IN THIS AREA OF THE SITE ARE NOT WELL UNDERSTOOD AND WILL BE DELINEATED DURING DRILLING. SCREENS WILL BE COMPLETED BASED ON THE IMPACTS OBSERVED.

ISSUE/REV	DESCRIPTION	TECH	ENG	DATE
0	FINAL	CHF	JS	10/03/12

DISCLAIMER:
THIS DRAWING WAS DEVELOPED THROUGH THE APPLICATION OF PROFESSIONAL ENGINEERING SKILL AND PROPRIETARY METHODOLOGIES, PROCESSES, AND KNOW HOW OF MWH AS AUTHOR, ALL PURSUANT TO THE TERMS OF A CONTRACTUAL SCOPE OF WORK GOVERNING ITS PREPARATION. THIS DRAWING MAY NOT BE USED OR MODIFIED OTHER THAN IN STRICT ACCORDANCE WITH THE TERMS OF THE GOVERNING CONTRACT AND SCOPE OF WORK OR OTHERWISE ABSENT THE INVOLVEMENT AND CONSENT OF THE AUTHOR. ANY ALTERATION OR ADAPTATION OF THIS DRAWING SHALL BE CONSISTENT WITH THE AUTHOR'S CONTRACTUAL AND PROPRIETARY RIGHTS AND BE AT USER'S SOLE RISK AND WITHOUT ANY LIABILITY OR LEGAL RESPONSIBILITY OF MWH.

DESIGNED BY	J GARVEY	10/03/12
DRAWN BY	C FOWLER	10/03/12
CHECKED BY	J GARVEY	10/03/12
APPROVED BY	D CONNER	10/03/12
PROJECT MANAGER	T LEESON	10/03/12
CLIENT APPROVAL		
CLIENT REFERENCE NO.		

PROJECT LOCATION: NORTHEAST CHURCH ROCK MINE
PROJECT: AREA NORTH OF NECR-1 REMEDIATION WORK PLAN
TITLE: CROSS-SECTIONS A AND B
FIGURE: 8
REVISION: 0
FILE NAME: 1011273D020

MWH

N:\Design-Drafting\Clients_Q-Z\United Nuclear Corporation\NECR\013-Sheet Set\Hydrocarbon Remediation Work Plan\1011273D020

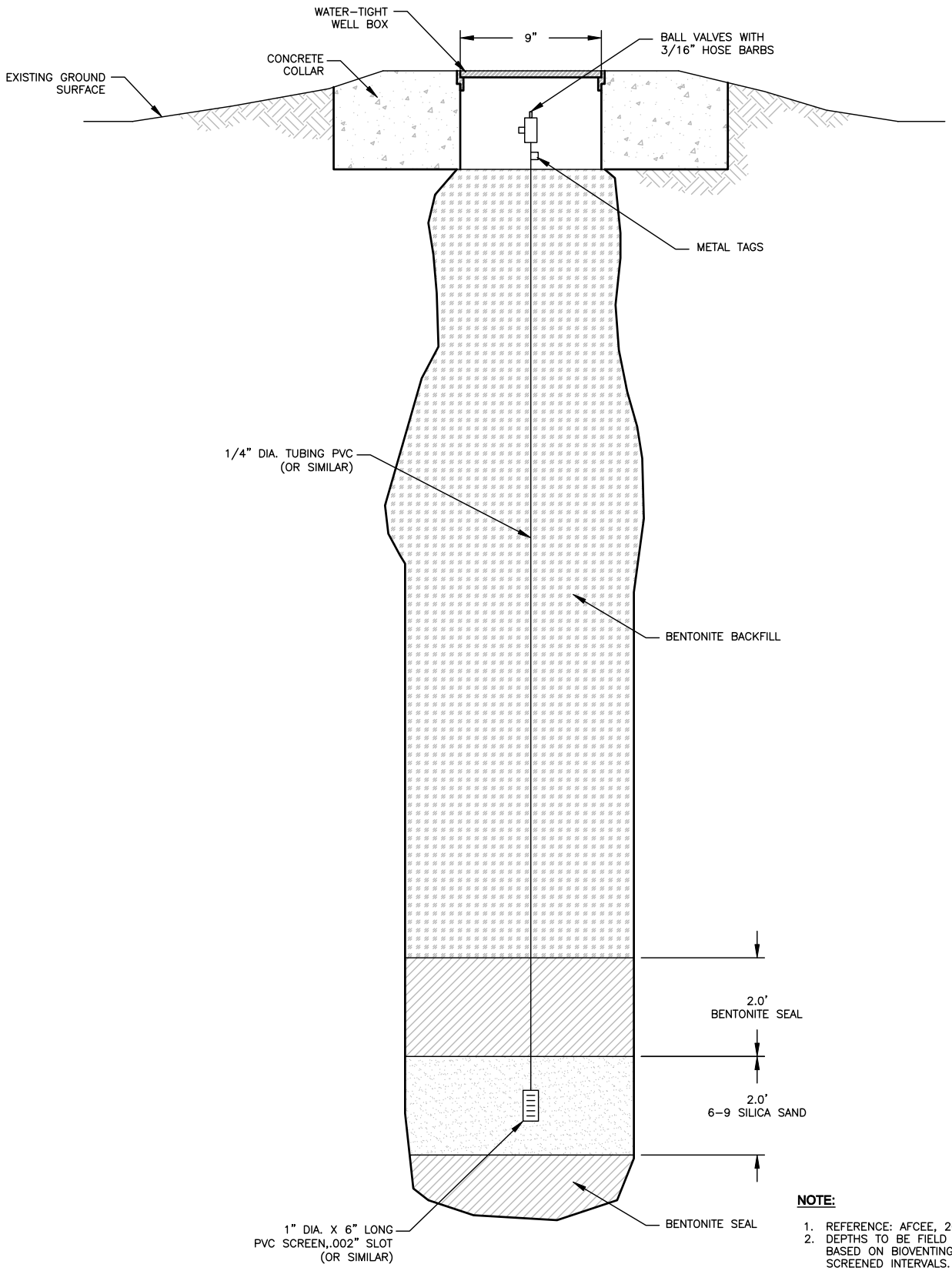

NOTE:

1. REFERENCE: AFCEE, 2004.
2. DEPTHS TO BE FIELD ADJUSTED BASED ON BIOVENTING WELL SCREENED INTERVALS.

9/5 TYPICAL MONITORING POINT CONSTRUCTION DETAIL

N.T.S.

DESIGNED BY	J SMITH	10/03/12
DRAWN BY	C FOWLER	10/03/12
CHECKED BY	J SMITH	10/03/12
APPROVED BY	J SMITH	10/03/12
PROJECT MANAGER	T LEESON	10/03/12
CLIENT APPROVAL		
CLIENT REFERENCE NO		

PROJECT LOCATION: NORTHEAST CHURCH ROCK MINE

PROJECT: AREA NORTH OF NECR-1 REMEDIATION WORK PLAN

TITLE: TYPICAL MONITORING POINT CONSTRUCTION

MWH

FIGURE: 9

REVISION: 0

FILE NAME: 1011273D010

N:\Design-Drafting\Clients_Q-Z\United Nuclear Corporation\NECR\013-Sheet Set\Hydrocarbon Remediation Work Plan\1011273D010 10/4/2012 4:52:51 PM

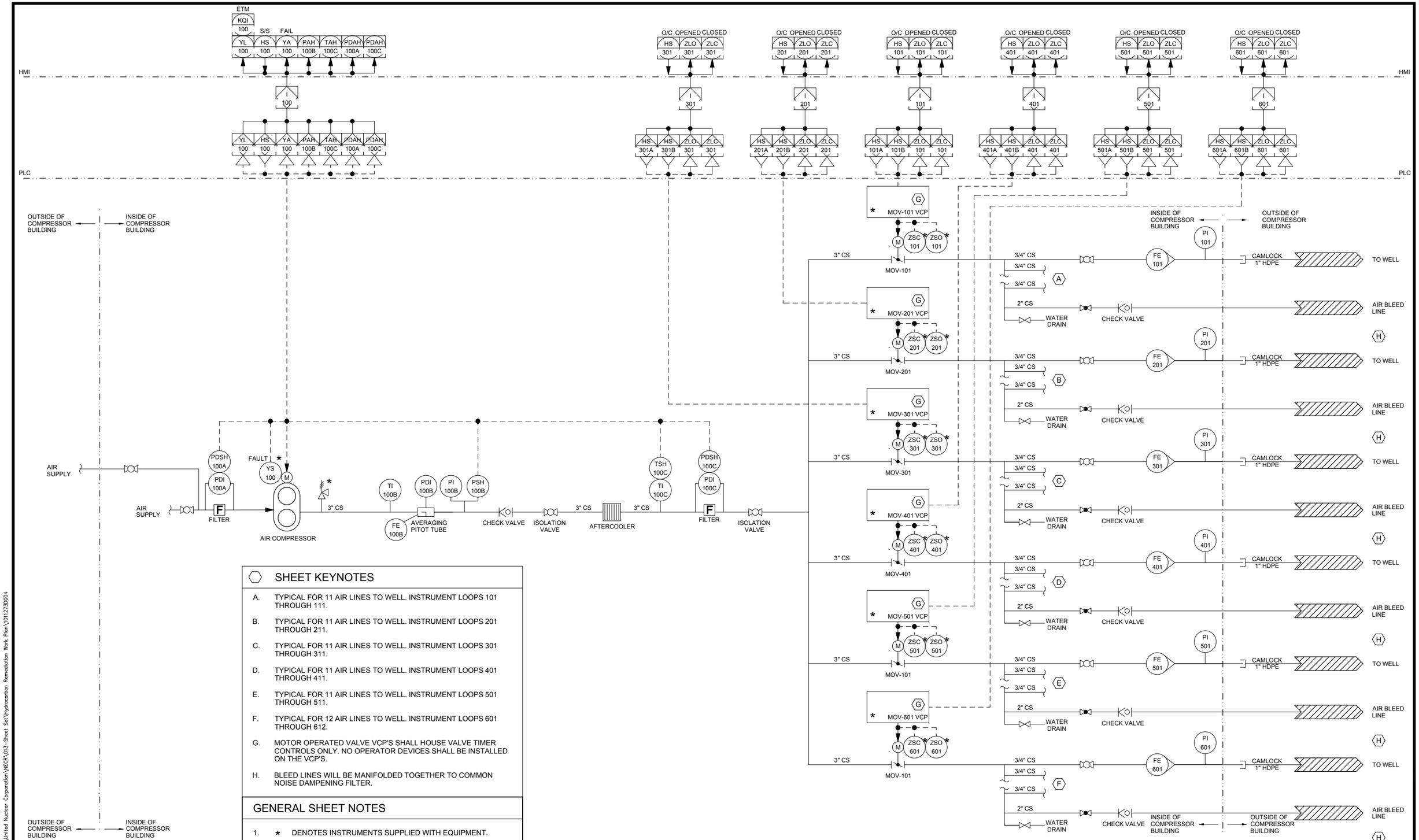

SHEET KEYNOTES

A. TYPICAL FOR 11 AIR LINES TO WELL. INSTRUMENT LOOPS 101 THROUGH 111.

B. TYPICAL FOR 11 AIR LINES TO WELL. INSTRUMENT LOOPS 201 THROUGH 211.

C. TYPICAL FOR 11 AIR LINES TO WELL. INSTRUMENT LOOPS 301 THROUGH 311.

D. TYPICAL FOR 11 AIR LINES TO WELL. INSTRUMENT LOOPS 401 THROUGH 411.

E. TYPICAL FOR 11 AIR LINES TO WELL. INSTRUMENT LOOPS 501 THROUGH 511.

F. TYPICAL FOR 12 AIR LINES TO WELL. INSTRUMENT LOOPS 601 THROUGH 612.

G. MOTOR OPERATED VALVE VCP'S SHALL HOUSE VALVE TIMER CONTROLS ONLY. NO OPERATOR DEVICES SHALL BE INSTALLED ON THE VCP'S.

H. BLEED LINES WILL BE MANIFOLDED TOGETHER TO COMMON NOISE DAMPENING FILTER.

GENERAL SHEET NOTES

1. * DENOTES INSTRUMENTS SUPPLIED WITH EQUIPMENT.

REV	DESCRIPTION	TECH	ENG	DATE
0	FINAL	CHF	JS	10/03/12

DISCLAIMER:
THIS DRAWING WAS DEVELOPED THROUGH THE APPLICATION OF PROFESSIONAL ENGINEERING SKILL AND PROPRIETARY METHODOLOGIES, PROCESSES, AND KNOW HOW OF MWH AS AUTHOR, ALL PURSUANT TO THE TERMS OF A CONTRACTUAL SCOPE OF WORK GOVERNING ITS PREPARATION. THIS DRAWING MAY NOT BE USED OR MODIFIED OTHER THAN IN STRICT ACCORDANCE WITH THE TERMS OF THE GOVERNING CONTRACT AND SCOPE OF WORK OR OTHERWISE ABSENT THE INVOLVEMENT AND CONSENT OF THE AUTHOR. ANY ALTERATION OR ADAPTATION OF THIS DRAWING SHALL BE CONSISTENT WITH THE AUTHOR'S CONTRACTUAL AND PROPRIETARY RIGHTS AND BE AT USER'S SOLE RISK AND WITHOUT ANY LIABILITY OR LEGAL RESPONSIBILITY OF MWH.

DESIGNED BY	J SMITH	10/03/12
DRAWN BY	S TRAPP	10/03/12
CHECKED BY	J SMITH	10/03/12
APPROVED BY	J SMITH	10/03/12
PROJECT MANAGER	T LEESON	10/03/12
CLIENT APPROVAL		
CLIENT REFERENCE NO.		

PROJECT LOCATION: NORTHEAST CHURCH ROCK MINE

PROJECT: AREA NORTH OF NECR-1 REMEDIATION WORK PLAN

TITLE: PROPOSED BIOVENTING SYSTEM PROCESS AND INSTRUMENTATION DIAGRAM

FIGURE: 10

REVISION: 0

FILE NAME: 1011273D004

MWH

N:\Design-Drafting\Clients_Q-Z\United Nuclear Corporation\NECR\013-Sheet Set\Hydrocarbon Remediation Work Plan\1012730004

INSTRUMENTATION CALL-OUT

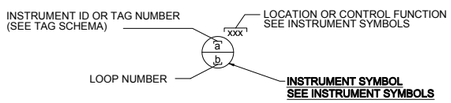

INSTRUMENT SYMBOLS

	PRIMARY LOCATION (ACCESSIBLE) (1)	PRIMARY LOCATION (INACCESSIBLE) (2)	FIELD MOUNTED	AUXILIARY LOCATION (ACCESSIBLE) (1)	AUXILIARY LOCATION (INACCESSIBLE) (2)
INSTRUMENT	a/b *	a/b *	a/b *	a/b *	a/b *
SHARED DISPLAY SHARED CONTROL	a/b	a/b	a/b	a/b	a/b
COMPUTER FUNCTION	a/b *	a/b *	a/b *	a/b *	a/b *
PROGRAMMABLE LOGIC CONTROL	a/b	a/b	a/b	a/b	a/b

(1) NORMALLY ACCESSIBLE TO OPERATOR

(2) NORMALLY INACCESSIBLE TO OPERATOR (BEHIND-THE-PANEL)

* LOCATION OR CONTROL FUNCTION - SEE BELOW

A INSTRUMENT IDENTIFICATION/TAG NUMBER (SEE TAG DESIGNATION FOR MORE INFO)

B INSTRUMENT LOOP NUMBER

SINGLE INSTRUMENT OR OTHER COMPONENT HAVING MULTIPLE FUNCTIONS

RELAY INTERLOCK LOGIC - SEE SCHEMATICS OR SPECIFICATIONS FOR MORE INFORMATION

INDICATING LIGHT - FIELD MOUNTED

INDICATING LIGHT - PANEL MOUNTED

CR CONTROL RELAY

LIGHTNING SURGE ARRESTOR

CONTROL FUNCTION DESIGNATIONS

XXX DESIGNATIONS SUCH AS 100 (LOCAL CONTROL PANEL NO 100), 200 (LOCAL CONTROL PANEL NO 200), ETC., ARE USED WHEN NECESSARY TO SPECIFY INSTRUMENT OR FUNCTION LOCATION.

AHC	AUTO/HOLD/CLOSE	OO	ON/OFF
AM	AUTO/MANUAL	OSC	OPEN/STOP/CLOSE
AS	AIR SUPPLY	PID	PROPORTIONAL/INTEGRAL/DERIVATIVE
DEV	DEVIATION	POT	POTENTIOMETER
HML	HIGH/MID/LOW	RL	RAISE/LOWER
HOA	HAND/OFF/AUTO	RSL	RAISE/STOP/LOWER
HOR	HAND/OFF/REMOTE	SD	SHUTDOWN
LOR	LOCAL/OFF/REMOTE	SEL	SELECT
LOS	LOCKOUT STOP	SP	SET POINT
LR	LOCAL/REMOTE	SR	START/RESET
MOA	MANUAL/OFF/AUTO	SS	START/STOP
OC	OPEN/CLOSE	ST	START
OCA	OPEN/CLOSE/AUTO	STR	STOP/RESET
OLH	OFF/LOW/HIGH		

INSTRUMENT SYMBOLS - CONT

COMPUTING OR CONVERTING FUNCTIONS

COMPUTING

SUMMING	DERIVATIVE	EXPONENTIAL
ADDITION	AVERAGING	BIAS
SUBTRACTION	RATIO	HIGH LIMITING
MULTIPLYING	DIFFERENCE	LOW LIMITING
DIVIDING	HIGH SELECTING	LINEARIZER
SQ ROOT EXTRACTION	LOW SELECTING	
PROPORTIONAL	INTEGRAL	

CONVERTING

E	VOLTAGE	R	RESISTANCE (ELECT)	A	ANALOG
I	CURRENT	D	DIGITAL	B	BINARY
P	PNEUMATIC	O	ELECTROMAGNETIC, SONIC	H	HYDRAULIC

PLC / REMOTE I/O POINTS

ANALOG INPUT

DISCRETE INPUT

DATA SIGNAL INPUT*

ANALOG OUTPUT

DISCRETE OUTPUT

DATA SIGNAL OUTPUT*

* 2-WIRE NETWORK INTERFACE. SEE SPECIFICATION FOR MORE INFORMATION

INSTRUMENTATION LINE SYMBOLOGY

NEW WORK (UNSCREENED)

EXISTING (SCREENED)

EXISTING TO BE DEMOLISHED

FUTURE EQUIPMENT (LONG DASH, SHORT DASH)

INSTRUMENT LINES

CAPILLARY

DATA LINK

ELECTRIC (PULSE SIGNAL)

ELECTRICAL SIGNAL

ULTRASONIC SIGNAL

HYDRAULIC SIGNAL

MECHANICAL LINK

PNEUMATIC SIGNAL

PROCESS

OTHER INSTRUMENTATION SYMBOLS AND SYMBOLOGY

24 VDC POWER SUPPLY (SIZE AS NOTED)

AS AIR SUPPLY

PRIMARY ELECTRICAL POWER (120V/60HZ UNLESS INDICATED OTHERWISE)

* INDICATES VENDOR FURNISHED EQUIPMENT

CABLE (MULTICONDUCTOR OR COAXIAL) FURNISHED WITH EQUIPMENT

(E) EXISTING EQUIPMENT

(F) FUTURE EQUIPMENT

(R) RELOCATED EQUIPMENT

TAG SCHEMA

TYPICAL TAG FORMAT

TIC-01 — INSTRUMENT TAG NUMBER
TIC — FUNCTIONAL IDENTIFICATION
T — FIRST LETTER
IC — SUCCEEDING LETTER(S)
01 — LOOP NUMBER

EXPANDED TAG FORMAT

10-PAH-01A — INSTRUMENT TAG NUMBER
10 — AREA / BUILDING NUMBER
PAH — FUNCTIONAL IDENTIFICATION
P — FIRST LETTER
AH — SUCCEEDING LETTER(S)
01 — LOOP NUMBER
A — OPTIONAL SUFFIX

RUN INDICATION SHALL BE RED, OFF INDICATION SHALL BE GREEN

	FIRST LETTER		SUCCEEDING LETTER(S)		
	MEASURED OR INITIATING VARIABLE	MODIFIER	READOUT OR PASSIVE FUNCTION	OUTPUT FUNCTION	MODIFIER
A	ANALYSIS		ALARM		
B	BURNER, COMBUSTION				
C	CONDUCTIVITY			CONTROL	CLOSED
D	DENSITY	DIFFERENTIAL			
E	VOLTAGE		SENSOR (PRIMARY ELEMENT)		
F	FLOW RATE	RATIO (FRACTION)			
G	GAGE		GLASS, VIEWING DEVICE		
H	HAND				HIGH
I	CURRENT (ELECTRICAL)		INDICATE		
J	POWER	SCAN			
K	TIME, TIME SCHEDULE	TIME RATE OF CHANGE		CONTROL STATION	
L	LEVEL		LIGHT		LOW
M	MOTOR	MOMENTARY			MIDDLE, INTERMEDIATE
N	TORQUE		ISOLATE	ISOLATOR	
O			ORIFICE, RESTRICTION		OPEN
P	PRESSURE, VACUUM		POINT (TEST) CONNECTION		
Q	QUANTITY	INTEGRATE, TOTALIZE			
R	RADIATION		RECORD		
S	SPEED, FREQUENCY	SAFETY		SWITCH	
T	TEMPERATURE			TRANSMIT	
U	MULTIVARIABLE		MULTIFUNCTION	MULTIFUNCTION	MULTIFUNCTION
V	VIBRATION, MECHANICAL ANALYSIS			VALVE, DAMPER, LOUVER	
W	WEIGHT, FORCE		WELL		
X	INTRUSION	X AXIS			
Y	EVENT, STATE, OR PRESENCE	Y AXIS		COMPUTER, CONVERT	
Z	POSITION, DIMENSION	Z AXIS		DRIVER, ACTUATOR, FINAL CONTROL ELEMENT	

ABBREVIATIONS

FOC	FIBER OPTIC CABLE	PLC	PROGRAMMABLE LOGIC CONTROLLER
FOR	FIBER OPTIC REPEATER	RIO	**REMOTE I/O**
FOT	FIBER OPTIC TRANSCEIVER	RVSS	REDUCED VOLTAGE SOLID-STATE STARTER
HMI	HUMAN MACHINE INTERFACE	RTU	REMOTE TERMINAL UNIT
LCP	LOCAL CONTROL PANEL	SW	SEAL WATER
LCS	LOCAL CONTROL STATION	TC	THERMOCOUPLE
MCC	MOTOR CONTROL CENTER	TSP	TWISTED SHIELD PAIR
MCP	MAIN CONTROL PANEL	UPS	UNINTERRUPTABLE POWER SUPPLY
MOV	MOTOR OPERATED VALVE	VCP	VENDOR SUPPLIED PANEL
MS	MOTOR STARTER	VFD	VARIABLE FREQUENCY DRIVE
NC	NORMALLY CLOSED	VSD	VARIABLE SPEED DRIVE
NO	NORMALLY OPEN		
OI	OPERATOR INTERFACE		
PC	PERSONAL COMPUTER		

GENERAL INSTRUMENTATION NOTES

1. ADDITIONAL INSTRUMENTATION AND CONTROL SYMBOLS MAY BE USED AS REQUIRED. SYMBOLS AND NOMENCLATURE ARE BASED ON ISA STANDARD 5.1-INSTRUMENTATION SYMBOLS AND IDENTIFICATION.
2. SEE ELECTRICAL AND GENERAL SHEETS FOR ADDITIONAL SYMBOLS AND ABBREVIATIONS.
3. SEE SPECIFICATION SECTION 17100 FOR COMPLETE DETAILS OF LOOP DRAWING SUBMITTAL REQUIREMENTS.
4. POWER SUPPLIES FOR INSTRUMENT LOOPS OR SYSTEMS SHALL BE FURNISHED BY THE INSTRUMENTATION SUPPLIER TO MEET THE VOLTAGE AND CURRENT REQUIREMENTS OF THE COMPONENTS IN EACH LOOP OR SYSTEM.
5. FIELD SWITCHES FOR ELECTRIC MOTOR OPERATION SHALL BE SUPPLIED BY THE ELECTRICAL CONTRACTOR. EXCEPTIONS ARE SWITCHES THAT ARE PART OF VENDOR PACKAGES.
6. VALVE ACTUATORS SHALL BE SUPPLIED WITH THE VALVE BY THE VALVE SUPPLIER, UNLESS OTHERWISE NOTED.

SAMPLE LOOP DIAGRAM (ISA EXPANDED FORMAT)

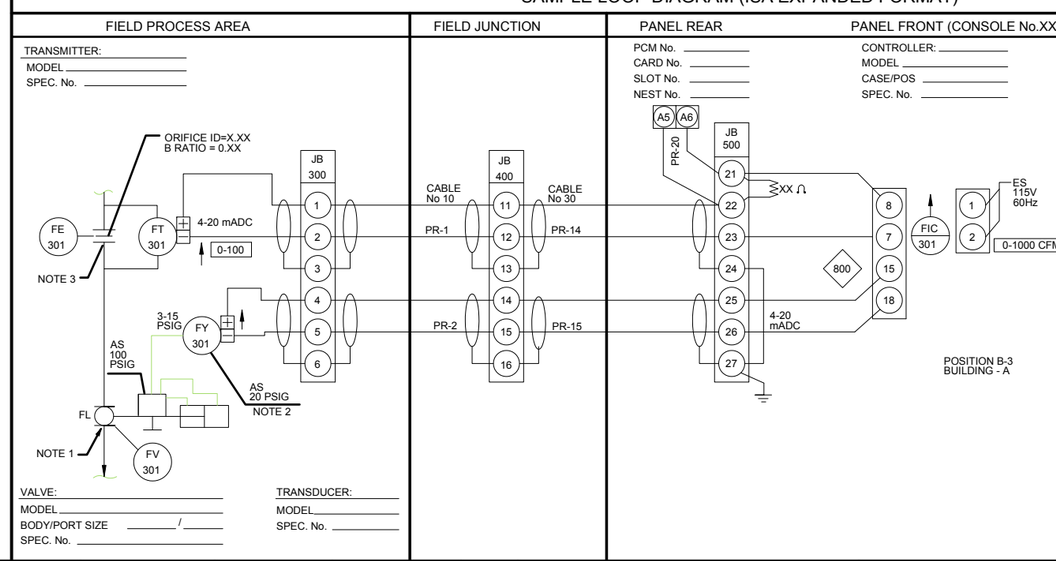

0-XXXX INSTRUMENT RANGE

XXX INSTRUMENT SET POINT

DIRECT ACTING OUTPUT SIGNAL

REVERSE ACTING OUTPUT SIGNAL

ISSUE REV	DESCRIPTION	TECH	ENG	DATE
0	FINAL	CHF	JS	10/03/12

DISCLAIMER:
THIS DRAWING WAS DEVELOPED THROUGH THE APPLICATION OF PROFESSIONAL ENGINEERING SKILL AND PROPRIETARY METHODOLOGIES, PROCESSES, AND KNOW HOW OF MWH AS AUTHOR, ALL PURSUANT TO THE TERMS OF A CONTRACTUAL SCOPE OF WORK GOVERNING ITS PREPARATION. THIS DRAWING MAY NOT BE USED OR MODIFIED OTHER THAN IN STRICT ACCORDANCE WITH THE TERMS OF THE GOVERNING CONTRACT AND SCOPE OF WORK OR OTHERWISE ABSENT THE INVOLVEMENT AND CONSENT OF THE AUTHOR. ANY ALTERATION OR ADAPTATION OF THIS DRAWING SHALL BE CONSISTENT WITH THE AUTHOR'S CONTRACTUAL AND PROPRIETARY RIGHTS AND BE AT USER'S SOLE RISK AND WITHOUT ANY LIABILITY OR LEGAL RESPONSIBILITY OF MWH.

DESIGNED BY	J SMITH	10/03/12
DRAWN BY	S TRAPP	10/03/12
CHECKED BY	J SMITH	10/03/12
APPROVED BY	J SMITH	10/03/12
PROJECT MANAGER	T LEESON	10/03/12
CLIENT APPROVAL		
CLIENT REFERENCE NO.		

PROJECT LOCATION: NORTHEAST CHURCH ROCK MINE

PROJECT: AREA NORTH OF NECR-1 REMEDIATION WORK PLAN

TITLE: PROPOSED BIOVENTING SYSTEM SYMBOLS AND NOMENCLATURE

FIGURE: 11

REVISION: 0

FILE NAME: 1011273D005

MWH

N:\Design-Drafting\Clients_Q-Z\United Nuclear Corporation\NECR\013-Sheet Set\Hydrocarbon Remediation Work Plan\1011273D005

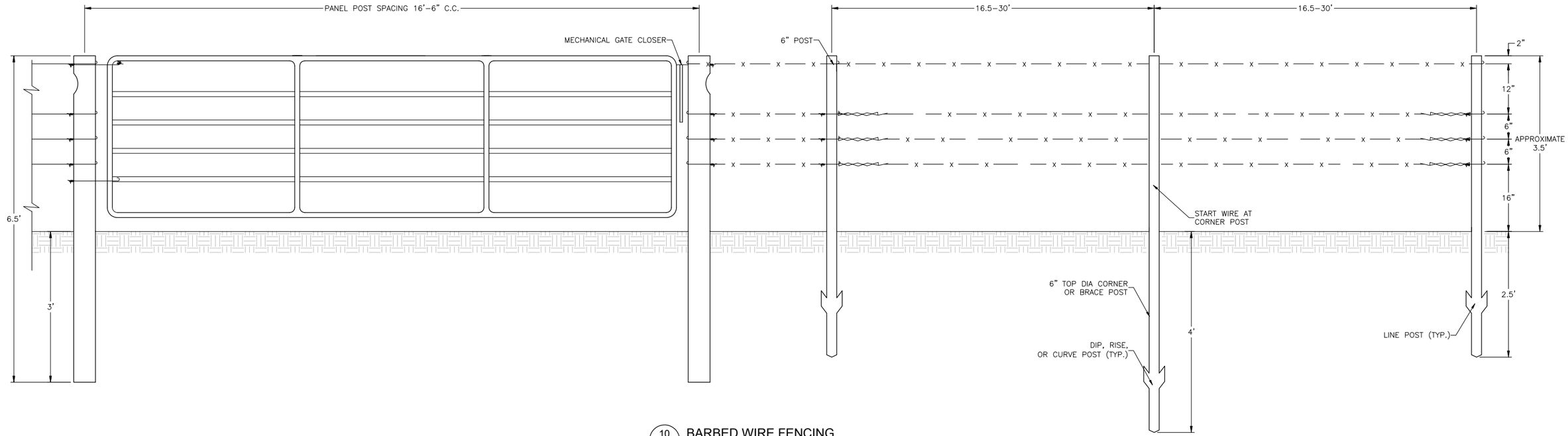

10/5 BARBED WIRE FENCING
N.T.S.

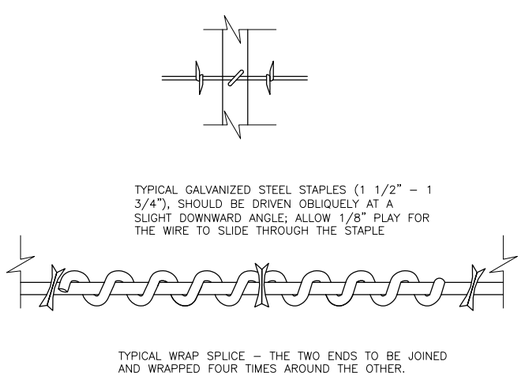

11/5 BARBED WIRE FIELD FENCING
N.T.S.

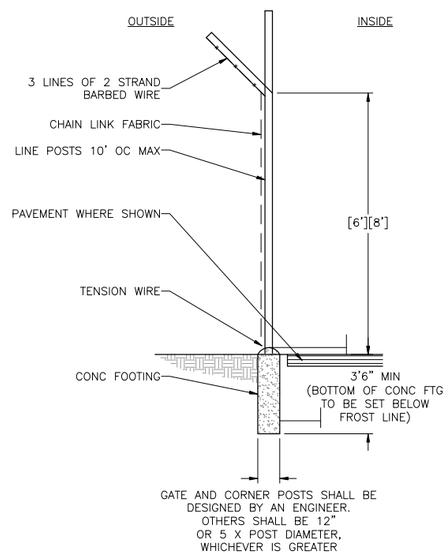

12/5 CHAIN LINK FENCE
N.T.S.

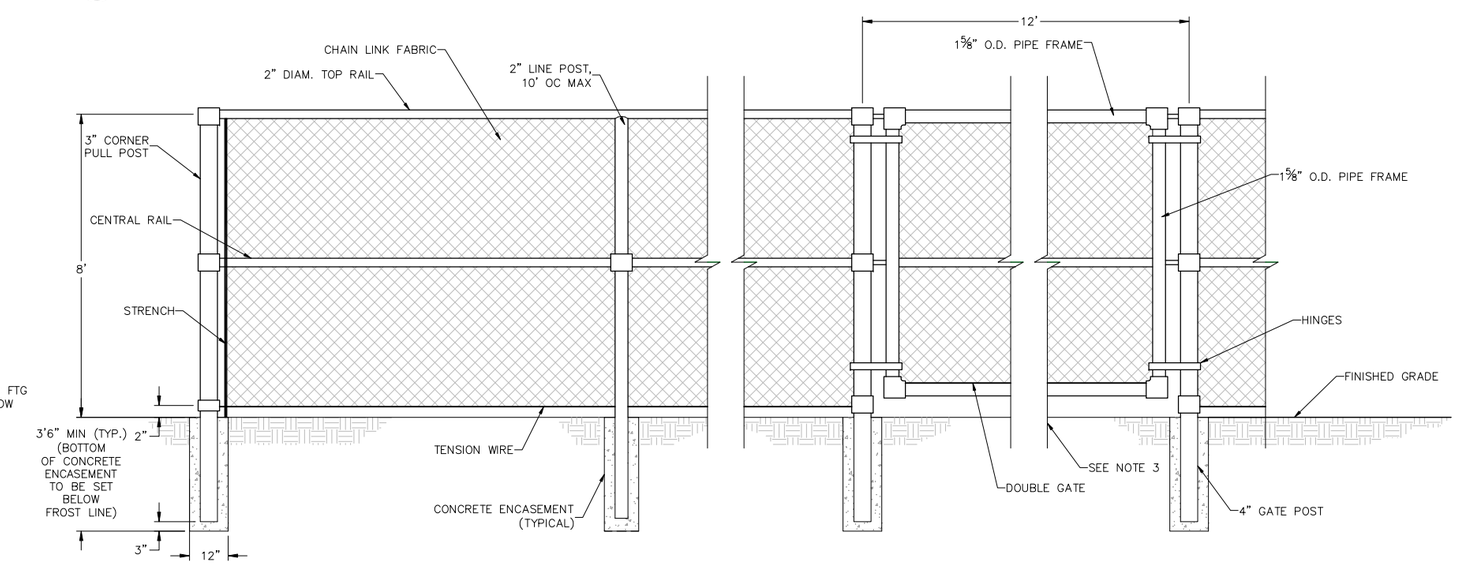

13/5 BIOVENTING SYSTEM BUILDING FENCE AND GATE
N.T.S.

NOTES:

1. SEE SPECIFICATIONS FOR FENCE MATERIAL COATINGS AND INSTALLATION REQUIREMENTS.
2. EXTENSION ARM MAY BE TURNED IN AT OPTION OF OWNER.

CHAIN LINK FENCE NOTES:

1. ALL REPOSITORY FENCE COMPONENT MATERIALS SHALL BE EITHER HOT DIPPED GALVANIZED STEEL OR IRON FENCE. FABRIC SHALL BE ALUMINUM COATED.
2. DOUBLE GATE SHALL HAVE A LOCKING MECHANISM, DROP ROD, AND TRUSS ROD.
3. DROP ROD FOR GATE OPENING SHALL HAVE A RECEIVING PIPE SLEEVE ENCASED IN CONCRETE BELOW FINISHED GRADE.

ISSUE REV	DESCRIPTION	TECH	ENG	DATE
0	FINAL	CHF	JS	10/03/12

DISCLAIMER:
THIS DRAWING WAS DEVELOPED THROUGH THE APPLICATION OF PROFESSIONAL ENGINEERING SKILL AND PROPRIETARY METHODOLOGIES, PROCESSES, AND KNOW HOW OF MWH AS AUTHOR, ALL PURSUANT TO THE TERMS OF A CONTRACTUAL SCOPE OF WORK GOVERNING ITS PREPARATION. THIS DRAWING MAY NOT BE USED OR MODIFIED OTHER THAN IN STRICT ACCORDANCE WITH THE TERMS OF THE GOVERNING CONTRACT AND SCOPE OF WORK OR OTHERWISE ABSENT THE INVOLVEMENT AND CONSENT OF THE AUTHOR. ANY ALTERATION OR ADAPTATION OF THIS DRAWING SHALL BE CONSISTENT WITH THE AUTHOR'S CONTRACTUAL AND PROPRIETARY RIGHTS AND BE AT USER'S SOLE RISK AND WITHOUT ANY LIABILITY OR LEGAL RESPONSIBILITY OF MWH.

DESIGNED BY	D CONNER	10/03/12
DRAWN BY	C FOWLER	10/03/12
CHECKED BY	J SMITH	10/03/12
APPROVED BY	J SMITH	10/03/12
PROJECT MANAGER	T LEESON	10/03/12
CLIENT APPROVAL		
CLIENT REFERENCE NO.		

PROJECT LOCATION: NORTHEAST CHURCH ROCK MINE
PROJECT: AREA NORTH OF NECR-1 REMEDIATION WORK PLAN
TITLE: FENCE DETAILS
FIGURE: 12
REVISION: 0
FILE NAME: 1011273D018

N:\Design-Drafting\Clients_G-Z\United Nuclear Corporation\NECR\013-Sheet Set\Hydrocarbon Remediation Work Plan\1011273D018

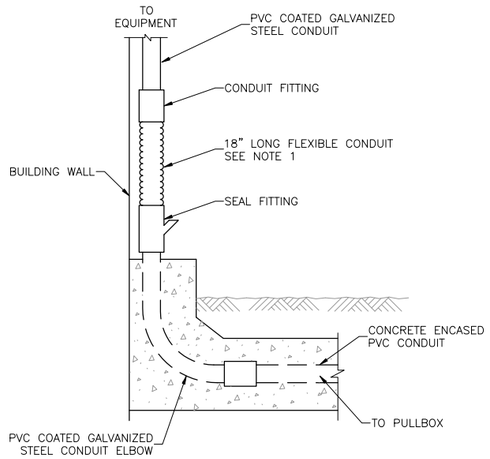

E-230 / 5 **CONDUIT TRANSITION**

REV 060109 N.T.S.

NOTES:

1. PROVIDE SLACK IN FLEXIBLE CONDUIT TO ALLOW FOR DIFFERENTIAL MOVEMENT BETWEEN ENCASED CONDUIT AND BUILDING.
2. EXPOSED CONDUIT SHALL BE FASTENED TO THE BUILDING IN ACCORDANCE WITH THE NEC AND DIVISION 16. THE FLEX CONDUIT AND SEAL FITTING SHALL NOT BE ATTACHED TO THE BUILDING.
3. CONCRETE ENCASEMENT SHALL EXTEND FROM THE PULLBOX TO 6" ABOVE GRADE. THE ENCASEMENT SHALL NOT BE TIED TO THE BUILDING

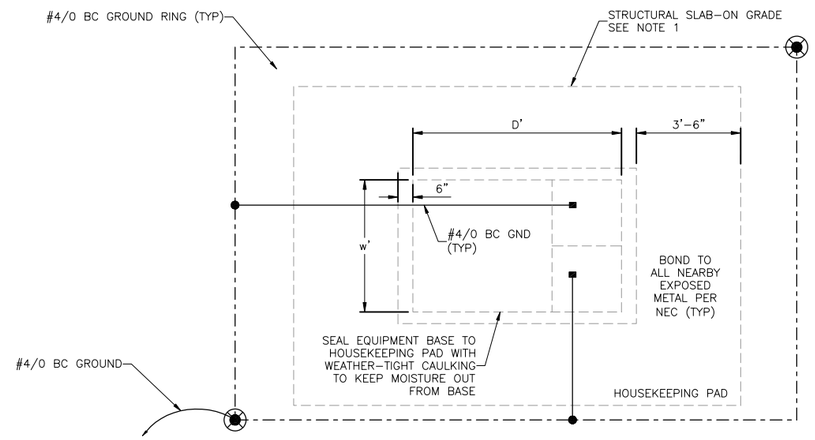

ES450 / 5 **TRANSFORMER PAD**

N.T.S.

TABLE 1	
EQUIPMENT NAME	DIMENSIONS ('H' x 'W' x 'D')
XFMR TX-7410	68" x 88" x 67"
XFMR TX-7420	56" x 68" x 71"
XFMR TX-7430	56" x 68" x 71"

(THESE DIMENSIONS ARE APPROXIMATE. THE TRANSFORMER SIZING IS ALSO APPROXIMATE AND IS SHOWN AS AN EXAMPLE. THE FINAL LOADS WILL DETERMINE THE TRANSFORMER SIZING.)

NOTES:

1. PROVIDE 30" TYPE "H" DRAIN ROCK BELOW SLAB.
2. OVERALL CONCRETE PAD DIMENSIONS SHALL BE DETERMINED FROM ELECTRICAL PLANS AND ADJUSTED AS REQUIRED TO SUIT EQUIPMENT FURNISHED. CONTRACTOR SHALL COORDINATE EQUIPMENT PAD SIZES WITH REQUIREMENTS OF THE SUPPLIERS.
3. ELECTRICAL SAMPLE DETAIL.

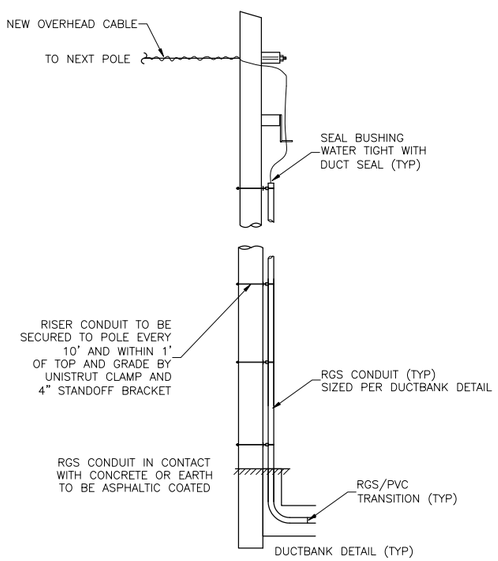

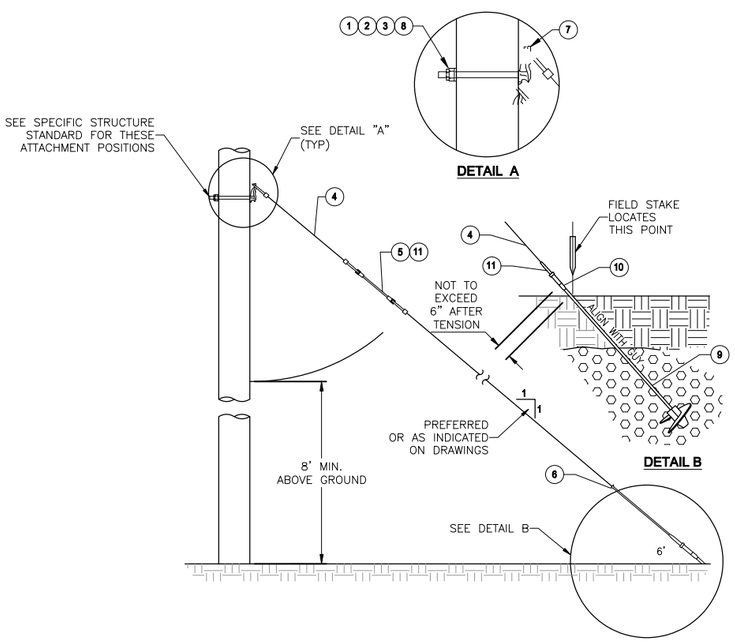

E-908 / 5 **OHPL TRANSMISSION SECTIONS**

N.T.S.

GUY MATERIAL SCHEDULE

CALLOUT	PART-NO.	DESCRIPTION	QTY.	MISC.
1	AS REQUIRED	3/4" X LENGTH REQUIRED MACHINE BOLT	2 EA	
2	AS REQUIRED	3/4" MF LOCKNUT	2 EA	
3	AS REQUIRED	3" CURVED SQUARE WASHER WITH 7/8" HOLE	2 EA	
4	AS REQUIRED	3/8" 7 STRAND EHS GUY STRAND	100 FT	
5	HUGHES BROS. NO. CF693TT-18	FIBERGLASS GUY STRAIN INSULATORS 18" MIN. LENGTH, 15,000 LB.	2 EA	USE ADDITIONAL INSULATORS AS REQUIRED
6	AS REQUIRED	GUY MARKER FULL ROUND	2 EA	YELLOW 8' LENGTH
7	CONTINENTAL NO. G-56X2	GUY HOOK WITH 18 MM HOLE	2 EA	15,000 LB MIN.
8	AS REQUIRED	3/4" DOUBLE COIL SPRING LOCKWASHER	2 EA	
9	AS REQUIRED	POWER INSTALLED SCREW ANCHOR ASSEMBLY WITH 12" HELIX AND 1" ROD	2 EA	1" HELIX
10	AS REQUIRED	TWIN EYENUT FOR 1" DIAMETER POWER INSTALLED SCREW ANCHOR	2 EA	
11	AS REQUIRED	STRANDVISE FOR 3/8" 7 STRAND EHS REGULAR BAIL	8 EA	

NOTES:

GUY STRAIN INSULATORS TO BE INSTALLED PER NESC RULE 279A2 INSULATORS SHALL BE INSTALLED AS FOLLOWS:

1. ALL INSULATORS SHALL BE LOCATED AT LEAST 8' ABOVE GROUND.
2. WHEN HAZARD WOULD EXIST WITH ONE INSULATOR, TWO OR MORE GUY INSULATORS SHALL BE USE SO AS TO INCLUDE, SO FAR AS PRACTICAL, THE EXPOSED SECTION OF THE GUY BETWEEN THEM.
3. INSULATORS SHALL BE SO PLACED THAT IN CASE ANY GUY SAGS DOWN UPON ANOTHER, THE INSULATORS WILL NOT BECOME INEFFECTIVE.

ISSUE / REV	DESCRIPTION	TECH	ENG	DATE
0	FINAL	CHF	JS	10/03/12

DISCLAIMER:
THIS DRAWING WAS DEVELOPED THROUGH THE APPLICATION OF PROFESSIONAL ENGINEERING SKILL AND PROPRIETARY METHODOLOGIES, PROCESSES, AND KNOW HOW OF MWH AS AUTHOR, ALL PURSUANT TO THE TERMS OF A CONTRACTUAL SCOPE OF WORK GOVERNING ITS PREPARATION. THIS DRAWING MAY NOT BE USED OR MODIFIED OTHER THAN IN STRICT ACCORDANCE WITH THE TERMS OF THE GOVERNING CONTRACT AND SCOPE OF WORK OR OTHERWISE ABSENT THE INVOLVEMENT AND CONSENT OF THE AUTHOR. ANY ALTERATION OR ADAPTATION OF THIS DRAWING SHALL BE CONSISTENT WITH THE AUTHOR'S CONTRACTUAL AND PROPRIETARY RIGHTS AND BE AT USER'S SOLE RISK AND WITHOUT ANY LIABILITY OR LEGAL RESPONSIBILITY OF MWH.

DESIGNED BY	J GUERRA	10/03/12
DRAWN BY	C FOWLER	10/03/12
CHECKED BY		
APPROVED BY		
PROJECT MANAGER	T LEESON	10/03/12
CLIENT APPROVAL		
CLIENT REFERENCE NO.		

PROJECT LOCATION: NORTHEAST CHURCH ROCK MINE

PROJECT: AREA NORTH OF NECR-1 REMEDIATION WORK PLAN

TITLE: ELECTRICAL DETAILS

FIGURE: 13 REVISION: 0

FILE NAME: 1011273D018

MWH

N:\Design-Drafting\Clients_Q-Z\United Nuclear Corporation\NECR\013-Sheet Set\Hydrocarbon Remediation Work Plan\1011273D018