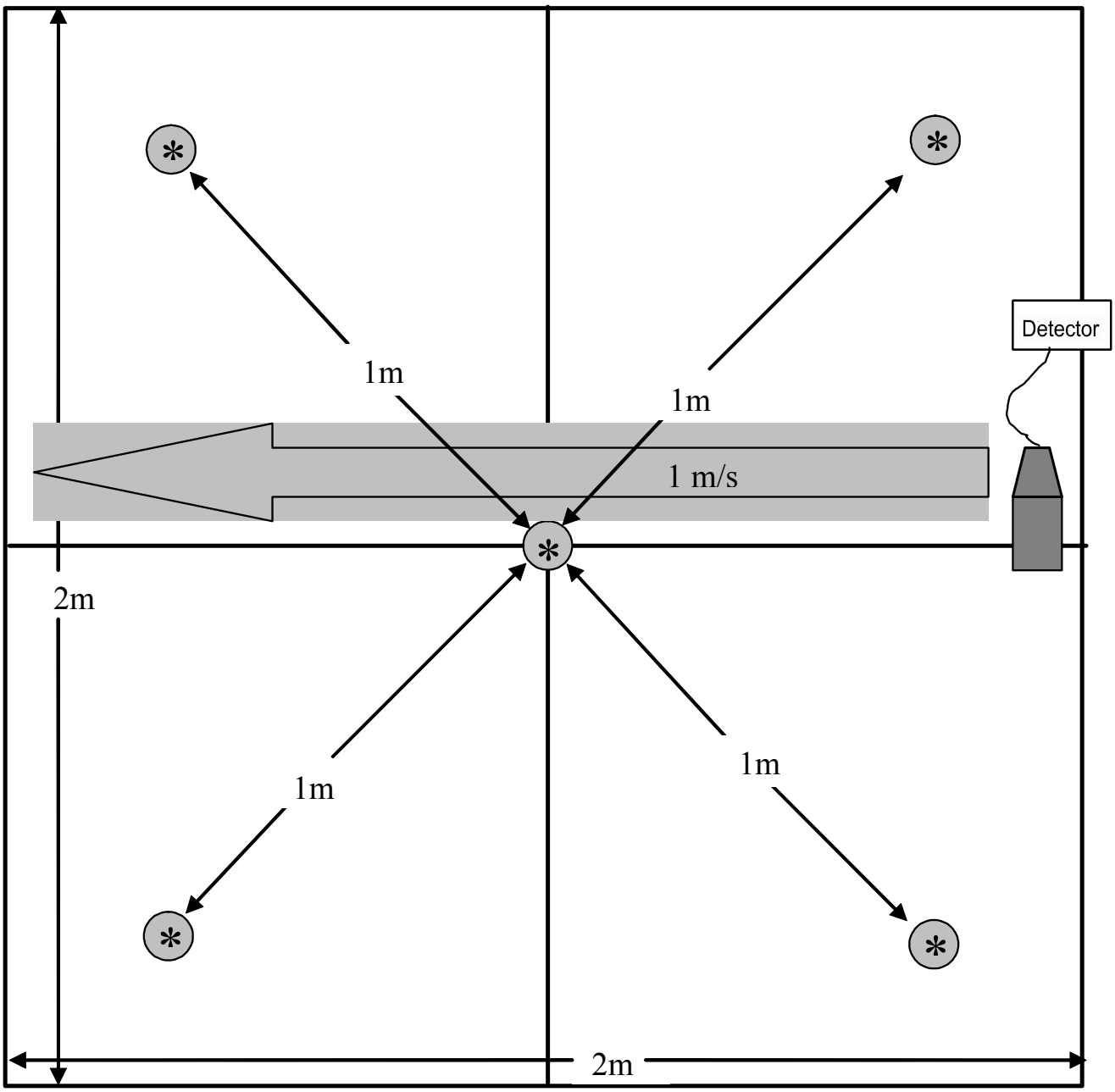

Explanation

Indicates Sampling Locations

integral consulting inc.

BROWN AND CALDWELL

Date: August 2007

Atlantic Richfield Company

Project No: 132799

Figure 6-1

Sampling Grid Showing Detector Movement Across Grid

P:\ARCO\132799 – Process Areas RI Work Plan\CAD\August 2007 Report\Figure 6-1.dwg
Aug 30, 2007 - 9:19am
rjohnson