APPENDIX J

Record Drawings

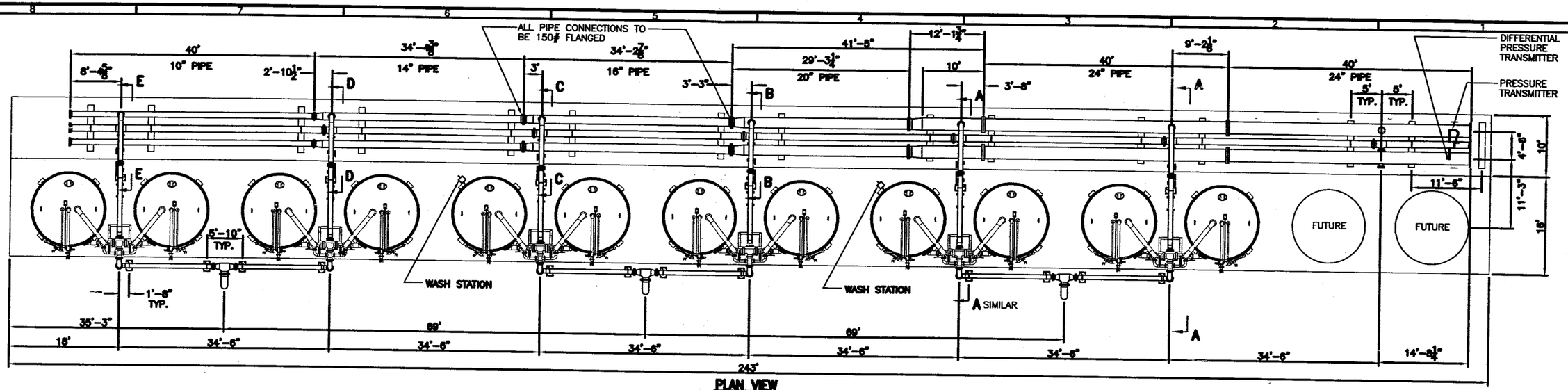

PLAN VIEW

ONE HALF OF SYSTEM – MIRROR FOR OTHER HALF

SCALE: 1/8" = 1'-0"

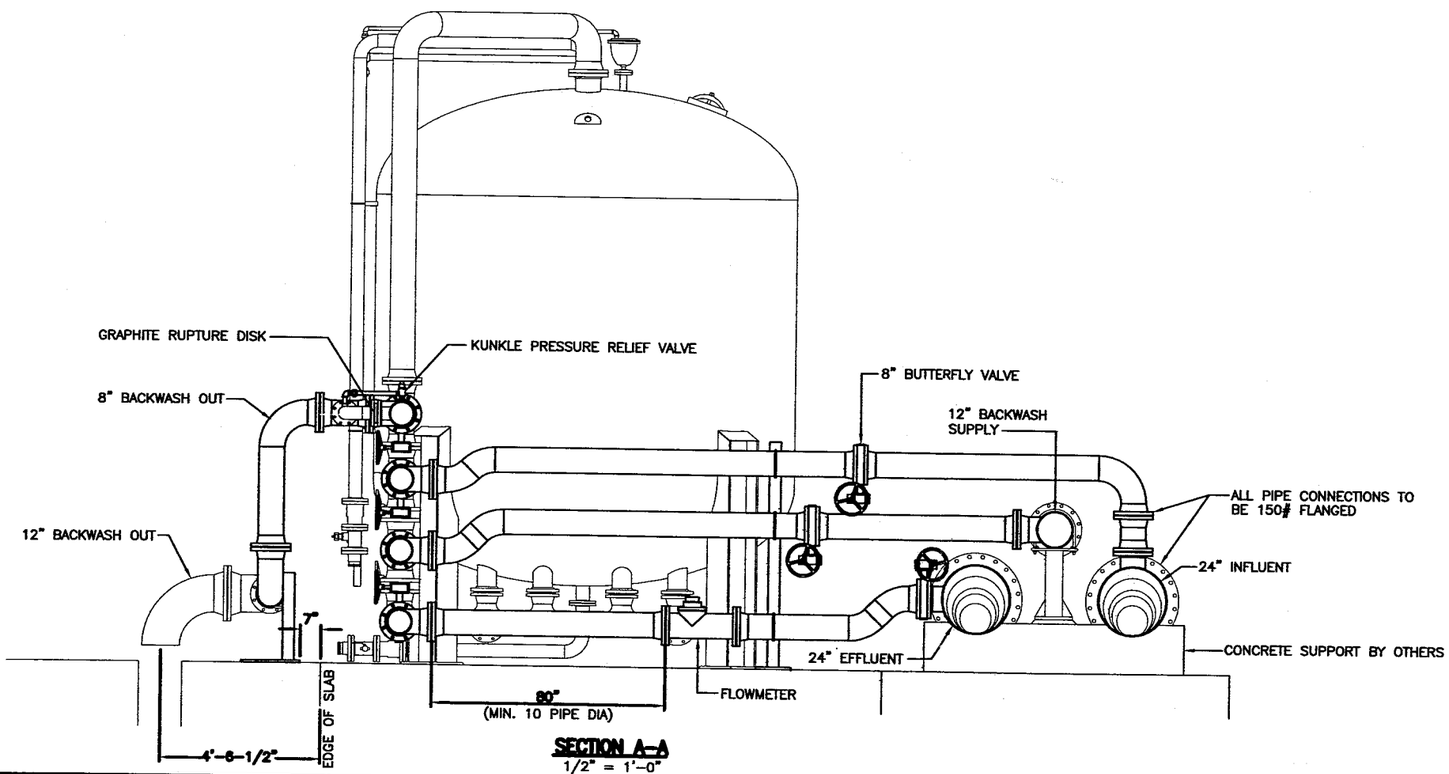

SECTION A–A

1/2" = 1'-0"

REV	DESCRIPTION	DATE	DWN	CHKD	APVD	ECN
E	Revised & added dimensions to slab & pipe support locations	4/29/04	TAC			
D	Removed 12" Pipe(BW out line), revised slab edge & dimentions	4/26/04	TAC			
C	REVISED VESSELS (LEG DESIGN & MANIFOLD PIPING) & SECTION NOTES	7/14/03	TAC			
B	MISC. REVISIONS	6/13/03	TAC	DRS		
A	MISC. REVISIONS	6/4/03	TAC	DRS		

COMPANY CONFIDENTIAL
THIS DOCUMENT AND ALL INFORMATION CONTAINED HEREIN ARE THE PROPERTY OF THE USFILTER AND/OR ITS AFFILIATES ("USF"). THE DESIGN CONCEPTS AND INFORMATION CONTAINED HEREIN ARE PROPRIETARY TO USF AND ARE SUBMITTED IN CONFIDENCE. THEY ARE NOT TRANSFERABLE AND MUST BE USED ONLY FOR THE PURPOSE FOR WHICH THE DOCUMENT IS EXPRESSLY LOANED. THEY MUST NOT BE DISCLOSED, REPRODUCED, LOANED OR USED IN ANY OTHER MANNER WITHOUT THE EXPRESS WRITTEN CONSENT OF USF. IN NO EVENT SHALL THEY BE USED IN ANY MANNER DETRIMENTAL TO THE INTEREST OF USF. ALL PARTIES RIGHTS ARE RESERVED. UPON THE DEMAND OF USF, THIS DOCUMENT, ALONG WITH ALL COPIES AND EXTRACTS, AND ALL RELATED NOTES AND ANALYSES, MUST BE RETURNED TO USF OR DESTROYED, AS INSTRUCTED BY USF. ACCEPTANCE OF THE DELIVERY OF THIS DOCUMENT CONSTITUTES AGREEMENT TO THESE TERMS AND CONDITIONS.

DESIGNER	TAC	DATE 5/09/03
CHECKER	CP	DATE 6/05/03
ENGINEER	LR	DATE 6/05/03
MANAGER	DRS	DATE 6/05/03
FILE:	URS_Muscoy	
SCALE:	NOTED	

TITLE: SITE PLAN & SECTION

CLIENT: URS – MUSCOY

USFilter — USFILTER/WESTATES, RED BLUFF, CA, 1-800-795-2664

PROJECT	DRAWING	SHEET	REV
17520 OA	MuscoyPlan-B	1 OF 1	E

STD: 2-0200-24X36D1

INTL REF:

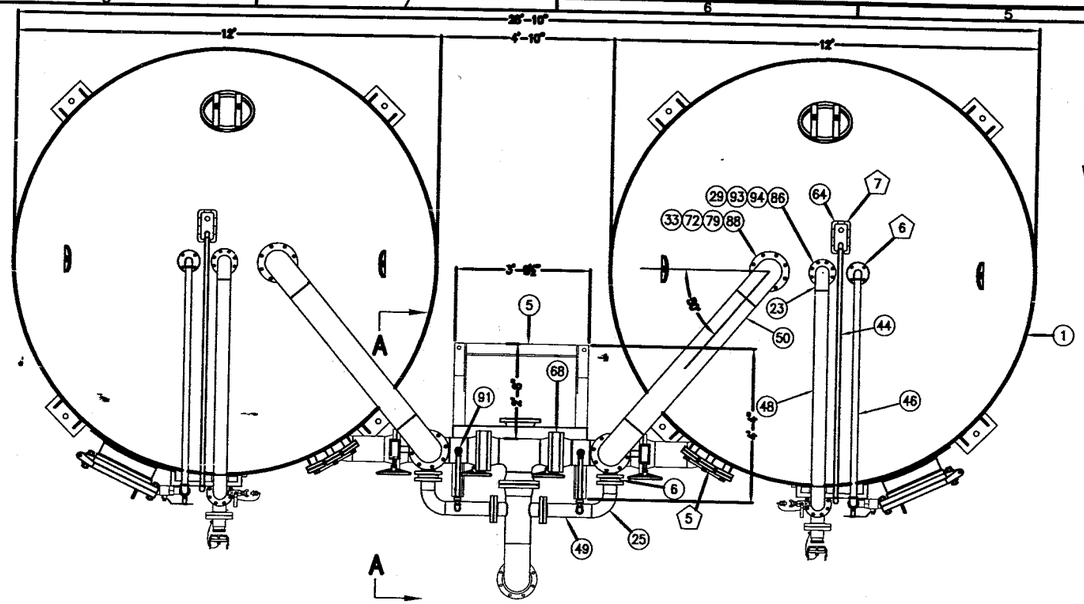

PLAN VIEW

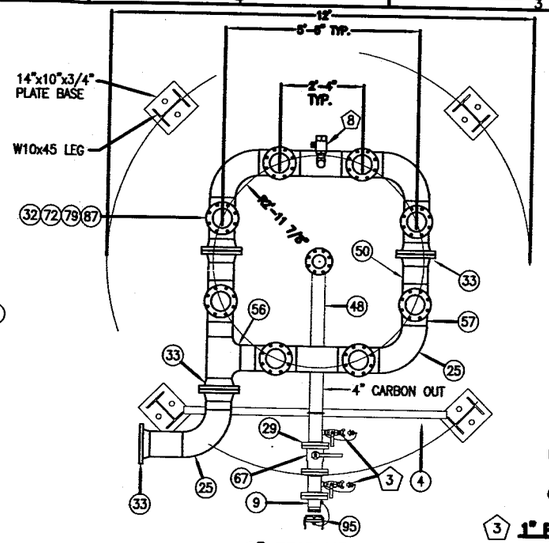

8" RING HEADER

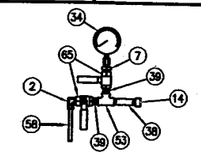

1 1/2" SAMPLE PORT
(4 REQUIRED)

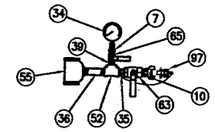

2 1" PNEUMATIC/PRESSURE PORT
(2 REQUIRED)

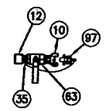

3 1" PNEUMATIC PORT
(8 REQUIRED)

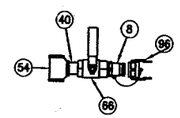

4 2" UTILITY PORT
(2 REQUIRED)

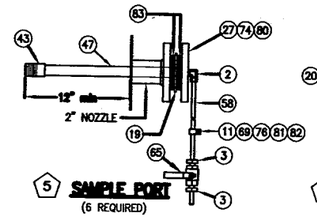

5 SAMPLE PORT
(6 REQUIRED)

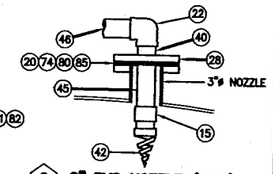

6 2" PVC NOZZLE (180°)
(2 REQUIRED)

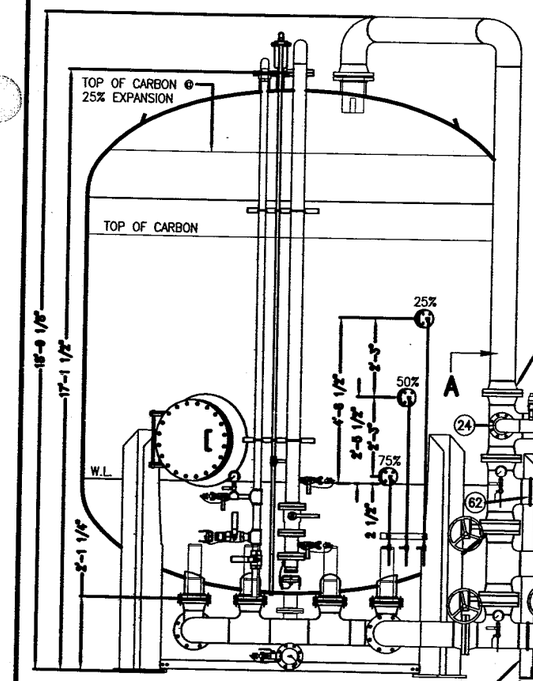

ELEVATION

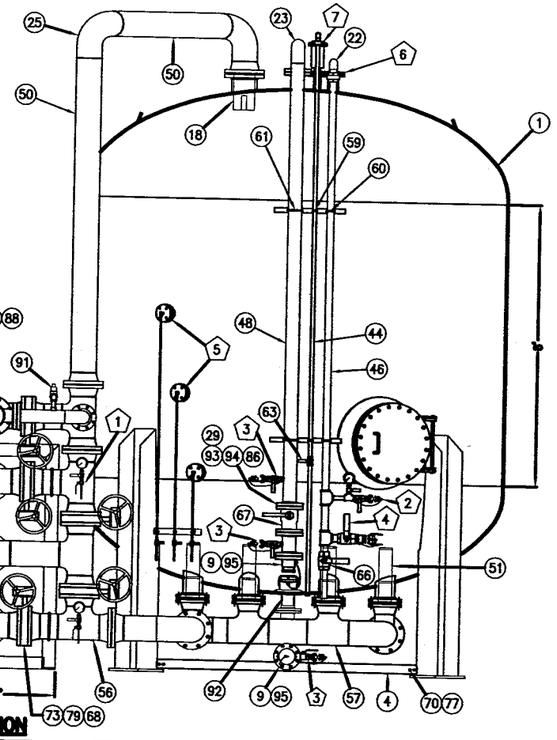

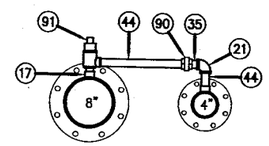

DETAIL 'B'
1" = 1'-0"

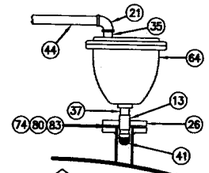

7 APCO 143C
(2 REQUIRED)

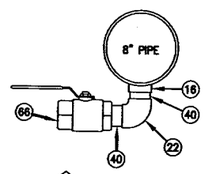

8 2" DRAIN
(2 REQUIRED)

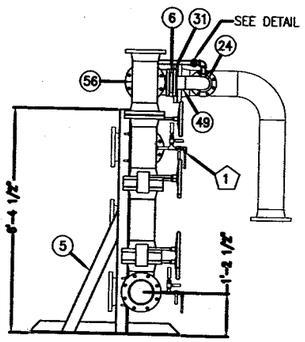

VIEW A-A

NOTES:

1. THIS DRAWING IS TO SHOW PIPING AND EQUIPMENT FOR CUSTOMER APPROVAL.
2. ALL BUTTERFLY VALVES ARE CAST IRON WITH STAINLESS TRIM, AL/BRNZ DISK.
3. PROVIDE STAINLESS STEEL SCREENS AT SEPTA UNDERDRAIN.
4. VESSELS SHALL BE 125 PSI, ASME CODE.
5. FINISH INTERIOR WITH PLASITE 4110, PREPARE AND APPLY STRICTLY IN ACCORDANCE WITH MANUFACTURERS RECOMMENDATIONS.
6. PIPING MATERIALS SHALL MEET: CS PIPE ASTM A-53 GRADE B (ERW); CS FITTINGS SA-234, ASME B16.9; SS THREADED FITTINGS ASTM A-351; SS PIPE ASTM A-312; SS BW FITTINGS ASTM A-403; MI THREADED FITTINGS ASME B-16.3.
7. FINISH ALL EXTERIOR UNCOATED CARBON STEEL WITH CARBOLINE 133 HIGH GLOSS URETHANE OVER CARBOLINE 888 RUST PREVENTATIVE EPOXY PRIMER APPLIED APPLIED PER MANUFACTURER'S RECOMMENDATIONS.
8. SYSTEM ESTIMATED SHIPPING WEIGHT: 40,000 LBS.
9. GROUTING BY OTHERS IF REQUIRED.
10. ALL INTERIOR WELDS AND ANY OTHER SHARP EDGES TO BE GROUND TO A SMOOTH RADIUS OF 1/8" MINIMUM.

SCHEDULED MATERIALS

TAG	DESCRIPTION	QTY	PART NUMBER
1	Vessel:HP1220 125 psi SA-516, Grade 70 Carbon Steel	2	HP1220-BT
2	Adapter: 90 deg Bronze 1/2" Comp x 1/2" MPT	10	M3012
3	Adapter: Str Bronze 1/2" Comp x 1/2" MPT	12	M3011
4	Angle: 2-1/2"X2-1/2"x3/8" A36	15'	A2.5X2.5X3/8
5	Angle: 4"x4"x1/2" A36	42'	A4X4X1/2
6	Burst Disk: 4" Mono Graphite 125 psi Zook	2	M3030
7	Bushing: 1/2" x 1/4" Galv. Sch/40 NPT	6	N/A
8	Cam Lock: 2" Alum: Male Cam x 2" MNPT	2	C1003A
9	Cam Lock: 4" Alum Male Cam x 4" Flange	4	C1010
10	Chicago: 1" Pneumatic Fitting AM12	10	C1020
11	Clamp: 1/2" SS & Rubber Tube	6	N/A
12	Coupling: 1" 304 SS Half	6	7011
13	Coupling: 1" Full 3000# A36	2	7006B
14	Coupling: 1/2" CS 3000# Half NPT	4	7002
15	Coupling: 2" 304 SS Full	2	7025
16	Coupling: 2" CS 3000# Half	2	7018
17	Coupling: 1" CS 3000# Half	4	N/A
18	Diffuser: 8" SS	2	S1008
19	Donut: 4" O.D. x 1" I.D. x 1/8" thick 304 SS	6	D1001
20	Donut: 5" O.D. x 2-1/4" I.D. x 1/8" thick 304 SS	2	D1002
21	Elbow: 1" 90 deg Galv. Sch/40 NPT	4	8010
22	Elbow: 2" 90 deg Galv. Sch/40 NPT	6	8013
23	Elbow: 4" 90 deg L/R 304 SS sch/10	6	2048
24	Elbow: 4" 90 deg CS L/R Weld sch/40	2	2046
25	Elbow: 8" 90 deg CS L/R Weld sch/40	14	2058
26	Flange: 2" CS Blind	2	2001
27	Flange: 2"x1/2" CS Reducing FNPT	6	2004
28	Flange: 3"x2" CS Reducing FNPT	2	2103
29	Flange: 4" 304 SS 150# S/O	16	2015
30	Flange: 4" CS 150# W/N	N/A	2014
31	Flange: 4" CS 150# S/O	8	2013
32	Flange: 6" CS 150# W/N	16	2019
33	Flange: 8" CS 150# W/N	2	2024
34	Gauge:2.5" 0-160psi Sensor,Pulsation Damper,SS Case	6	N/A
35	Nipple: 1" x Close 316 SS sch/40	10	N/A
36	Nipple: 1" x 4" 316 SS sch/40	2	N/A
37	Nipple: 1" x Close 316 SS sch/80	2	N/A
38	Nipple: 1/2" x 4" 316 SS sch/40	4	N/A
39	Nipple: 1/2" x Close 316 SS sch/40	10	N/A
40	Nipple: 2" x Close 316 SS sch/40	8	N/A
41	Nozzle: 1" Polypropylene NPT - N8	2	N/A
42	Nozzle: 2" PVC Spray - 2HHSJ PVC 170 1400	2	M3031
43	Nozzle: 3/4" Stainless Steel .015 Slot	6	N/A
44	Pipe: 1" Galv. Sch/40	40'	P1-GAL-S40
45	Pipe: 2" 304 SS sch/40	2'	P2-304-S40
46	Pipe: 2" Galv. Sch/40	40'	P2-GAL-S40
47	Pipe: 3/4" 304 SS sch/80	6'	P3/4-304-S80
48	Pipe: 4" 304L SS Sch/10	42'	P4-304-S10
49	Pipe: 4" CS sch/40	7'	P4-CS-S40
50	Pipe: 8" CS sch/40	40'	P8-CS-S40
51	Septa: 4-1/2" O.D. .015 SLOT 304 SS	16	M3037
52	Tee: 1"x1"x1/2" Galv. Sch/40 NPT	2	8008
53	Tee: 1/2" Galv.	4	8002
54	Tee: 2" Galv. Sch/40 NPT	2	8012
55	Tee: 2"x2"x1" Galv. Sch/40 NPT	2	8011
56	Tee: 8" CS Weld sch/40	12	2080
57	Tee: 8"x6"x6" CS Weld sch/40	16	2105
58	Tubing: 1/2" 304 SS .035 Wall	27'	T1/2-304X.035
59	U-Bolt: 1" Hot Dipped Galv.	4	N/A
60	U-Bolt: 2" Hot Dipped Galv.	4	N/A
61	U-Bolt: 4" Hot Dipped Galv.	6	N/A
62	U-Bolt: 8" Hot Dipped Galv.	6	N/A
63	Valve: 1" Bronze Chrome Ball	12	1004
64	Valve: 1" Press Air/Vac Vent - Apco 143-C	2	M3032
65	Valve: 1/2" Bronze	16	1002
66	Valve: 2" Bronze Chrome Ball	6	1005
67	Valve: 4" Full Port Flanged Ball 316 SS	4	1013
68	Valve: 8" Alum/Brnz Disk Butterfly Gear Op Lockable	10	1028
69	Bolt: 1/4" x 1" Hot Dipped Galv.	6	N/A
70	Bolt: 1/2" x 1" Hot Dipped Galv.	4	N/A
71	Bolt: 1-1/8" x 5-1/2" Hot Dipped Galv.	40	N/A
72	Bolt: 3/4" x 3-1/2" Hot Dipped Galv.	240	N/A
73	Bolt: 3/4" x 6" Hot Dipped Galv.	88	N/A
74	Bolt: 5/8"x3" Hot Dip Galv.	40	N/A
75	Bolt: 5/8"x4" Hot Dip Galv.	16	N/A
76	Nut: 1/4" Hot Dipped Galv. Heavy Hex	6	N/A
77	Nut: 1/2" Hot Dipped Galv. Heavy Hex	4	N/A
78	Nut: 1-1/8" Hot Dipped Galv. Heavy Hex	40	N/A
79	Nut: 3/4" Hot Dipped Galv. Heavy Hex	328	N/A
80	Nut: 5/8" Hot Dipped Galv. Heavy Hex	56	N/A
81	Washer: 1/4" Hot Dipped Galv. Flat	6	N/A
82	Washer: 1/4" Hot Dipped Galv. Split Ring Lock	6	N/A
83	Gasket: 2" Red Rubber Ring	14	N/A
84	Gasket: 20" Neoprene 1/8" thick Full Face	2	N/A
85	Gasket: 3" Red Rubber Ring	4	N/A
86	Gasket: 4" Red Rubber Ring	20	N/A
87	Gasket: 6" Red Rubber Ring	32	N/A
88	Gasket: 8" Red Rubber Ring	16	N/A
89	Union: 2" Galv. NPT	2	N/A
90	Union: 1" Galv. NPT	4	N/A
91	Valve: 1" NPT Kunkle Pressure Relief 125 psi	2	N/A
92	Abrasion Insert: 304 SS	4	N/A
93	Bolt: 5/8" x 3" 316 SS	128	N/A
94	Nut: 5/8" 316 SS Heavy Hex	128	N/A
95	Dust Cap: 4" Alum Cam Lock w/ SS Cable	4	N/A
96	Dust Cap: 2" Alum Cam Lock w/ SS Cable	2	N/A
97	Dust Cap: 1" Alum Chicago w/ SS Cable	10	N/A

REV	DESCRIPTION	DATE	DWN	CHKD	APVD	ECN
B	MISC REVISIONS	6/13/03	TAC	DRS		
A	MISC REVISIONS	6/4/03	TAC	DRS		

COMPANY CONFIDENTIAL
THIS DOCUMENT AND ALL INFORMATION CONTAINED HEREIN ARE THE PROPERTY OF THE EMPLOYER AND/OR ITS AFFILIATES ("USF"). THE DESIGN CONCEPTS AND INFORMATION CONTAINED HEREIN ARE PROPRIETARY TO USF AND ARE SUBMITTED IN CONFIDENCE. IT MAY NOT BE TRANSFERRED AND MUST BE USED ONLY FOR THE PURPOSE FOR WHICH THE DOCUMENT IS EXPRESSLY LOANED. THIS MUST NOT BE DISCLOSED, REPRODUCED, LOANED OR LICENSED IN ANY OTHER MANNER WITHOUT THE EXPRESS WRITTEN CONSENT OF USF. IN NO EVENT SHALL THIS BE USED IN ANY MANNER DETRIMENTAL TO THE INTEREST OF USF. ALL FORMS PRINTED ARE ASSIGNED, UPON THE ISSUANCE OF USF THIS DOCUMENT, ALONG WITH ALL COPIES AND EXTRACTS, AND ALL RELATED NOTES AND ANALYSES, MUST BE RETURNED TO USF OR DESTROYED, AS DIRECTED BY USF. ACCEPTANCE OF THE DELIVERY OF THIS DOCUMENT CONSTITUTES AGREEMENT TO THESE TERMS AND CONDITIONS.

		DATE
DESIGNER	TAC	5/08/03
CHECKER	CP	6/05/03
ENGINEER	LR	6/05/03
MANAGER	DRS	6/05/03
FILE:	URS_Muscoy	
SCALE:	1/2" = 1'	

TITLE: HP1230 4 LEVEL SYSTEM GENERAL ASSEMBLY

CLIENT: URS - MUSCOY

USFilter — USFILTER/WESTATES, RED BLUFF, CA, 1-800-795-2684

PROJECT	DRAWING	SHEET	REV
17520 OA	MnuscoyHP1220sys	1 OF 1	

STD: 2-0200-2423601

INTL REF:

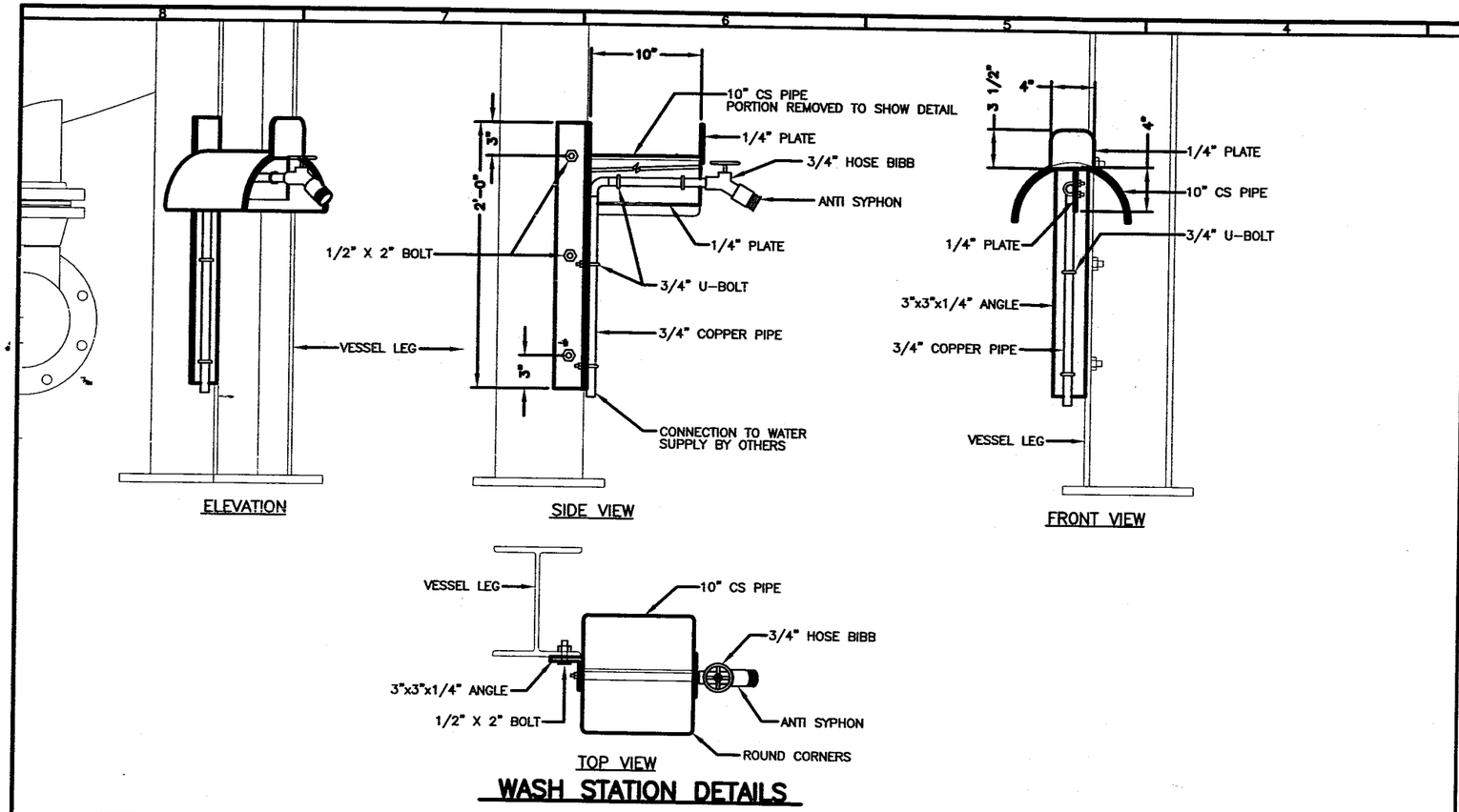

ELEVATION

SIDE VIEW

FRONT VIEW

TOP VIEW

WASH STATION DETAILS

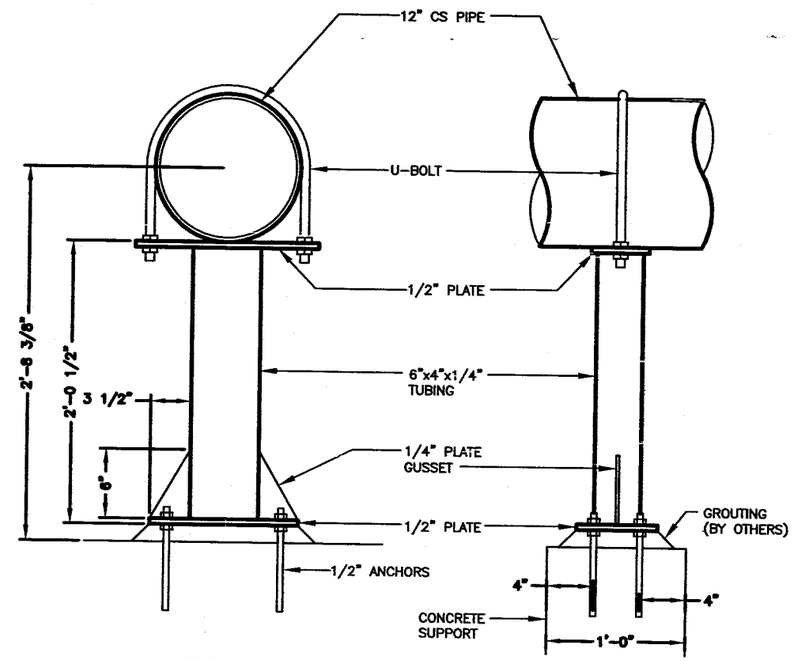

SIDE VIEW

SEE ANCHOR CALCULATIONS FOR BOLTS AND EMBEDMENT DEPTH

SIDE VIEW

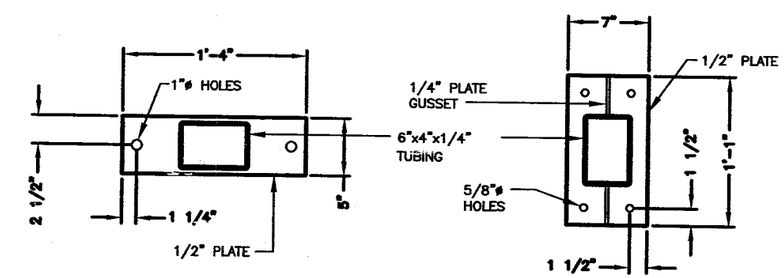

TOP PLATE DETAIL

BASE PLATE DETAIL

12" PIPE SUPPORT

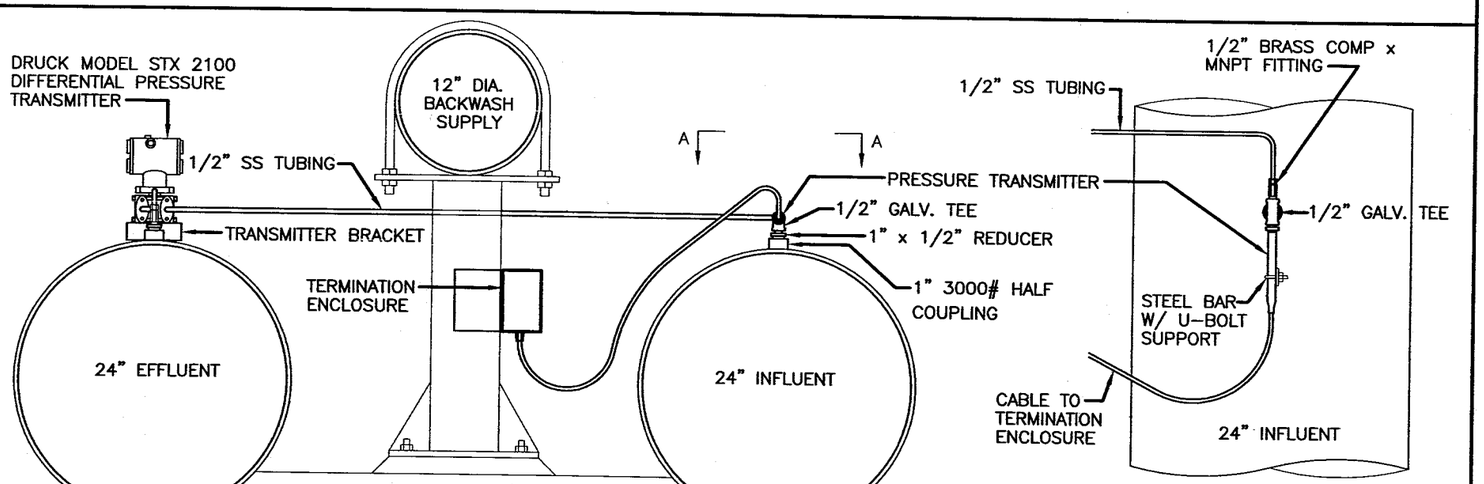

PRESSURE TRANSMITTER DETAIL

TYPICAL – ONE OF TWO LOCATIONS

VIEW A–A

REV	DESCRIPTION	DATE	DWN	CHKD	APVD	ECN
C	REVISED PRESSURE TRANSMITTER DETAIL	11/10/03	TAC			
B	ADDED PRESSURE TRANSMITTER DETAIL	8/12/03	TAC			
A	MISC. REVISIONS	6/13/03	TAC	DRS		

COMPANY CONFIDENTIAL
THIS DOCUMENT AND ALL INFORMATION CONTAINED HEREIN ARE THE PROPERTY OF THE USFILTER AND/OR ITS AFFILIATES ("USF"). THE DESIGN CONCEPTS AND INFORMATION CONTAINED HEREIN ARE PROPRIETARY TO USF AND ARE SUBMITTED IN CONFIDENCE. THEY ARE NOT TRANSFERABLE AND MUST BE USED ONLY FOR THE PURPOSE FOR WHICH THE DOCUMENT IS EXPRESSLY LOANED. THEY MUST NOT BE DISCLOSED, REPRODUCED, LOANED OR USED IN ANY OTHER MANNER WITHOUT THE EXPRESS WRITTEN CONSENT OF USF. IN NO EVENT SHALL THEY BE USED IN ANY MANNER DETRIMENTAL TO THE INTEREST OF USF. ALL PATENT RIGHTS ARE RESERVED. UPON THE DEMAND OF USF, THIS DOCUMENT, ALONG WITH ALL COPIES AND EXTRACTS, AND ALL RELATED NOTES AND ANALYSIS, MUST BE RETURNED TO USF OR DESTROYED, AS DIRECTED BY USF. ACCEPTANCE OF THE DELIVERY OF THIS DOCUMENT CONSTITUTES AGREEMENT TO THESE TERMS AND CONDITIONS.

DESIGNER	TAC	6/05/03
CHECKER	CP	6/05/03
ENGINEER	LR	6/05/03
MANAGER	DRS	6/05/03
FILE:	URS_Muscoy	
SCALE:	1" = 6"	

TITLE: DETAIL SHEET

CLIENT: URS – MUSCOY

USFilter — USFILTER/WESTATES, RED BLUFF, CA, 1-800-795-2664

PROJECT	DRAWING	SHEET	REV
17520 OA	DetailSheet	1 OF 1	

STD: 2-0200-24X36D1

INTL REF:

STD: 2-0600-8

INTL REF:

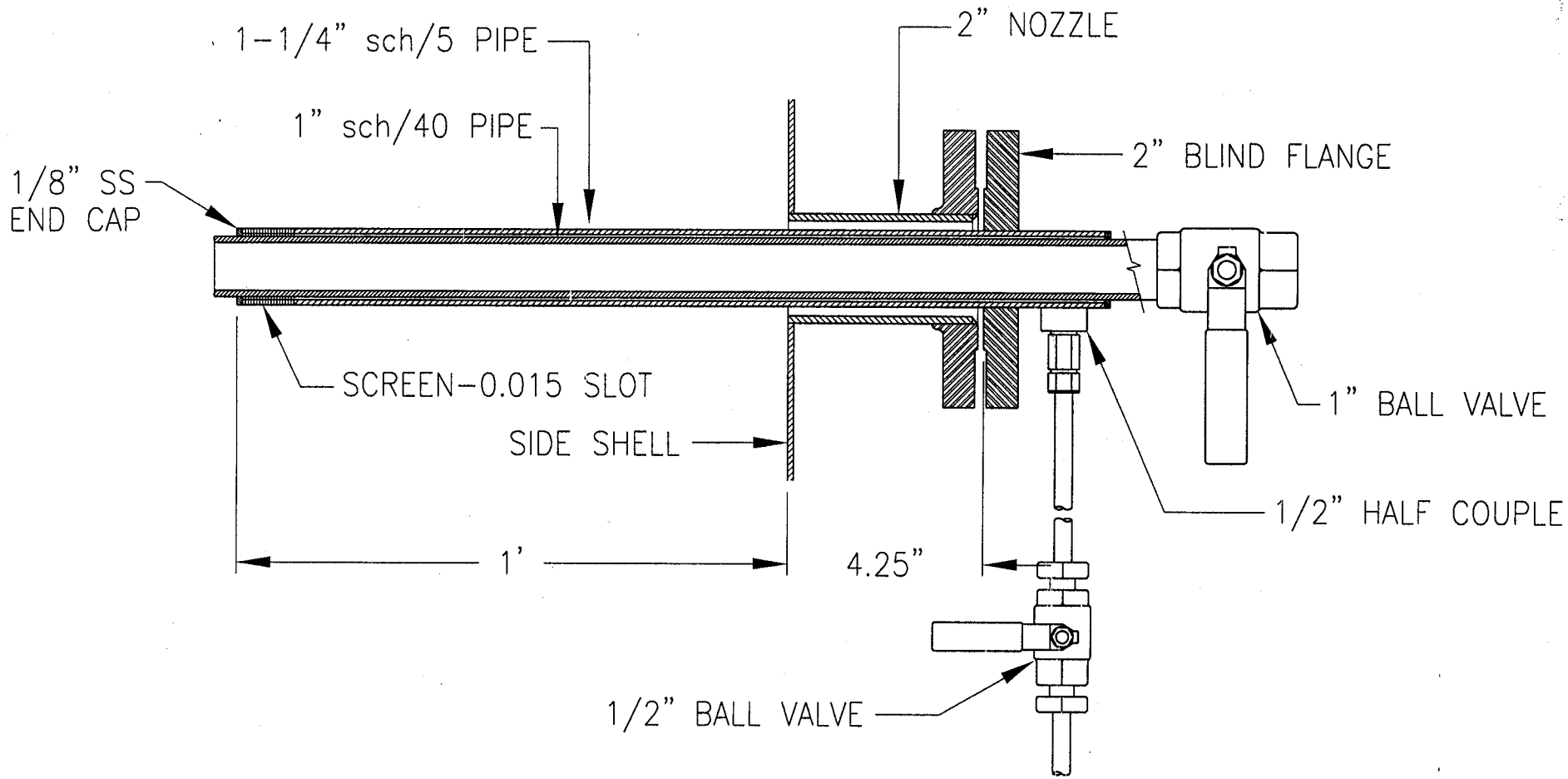

COMPANY CONFIDENTIAL

THIS DOCUMENT AND ALL INFORMATION CONTAINED HEREIN ARE THE PROPERTY OF THE USFILTER AND/OR ITS AFFILIATES ("USF"). THE DESIGN CONCEPTS AND INFORMATION CONTAINED HEREIN ARE PROPRIETARY TO USF AND ARE SUBMITTED IN CONFIDENCE. THEY ARE NOT TRANSFERABLE AND MUST BE USED ONLY FOR THE PURPOSE FOR WHICH THE DOCUMENT IS EXPRESSLY LOANED. THEY MUST NOT BE DISCLOSED, REPRODUCED, LOANED OR USED IN ANY OTHER MANNER WITHOUT THE EXPRESS WRITTEN CONSENT OF USF. IN NO EVENT SHALL THEY BE USED IN ANY MANNER DETRIMENTAL TO THE INTEREST OF USF. ALL PATENT RIGHTS ARE RESERVED. UPON THE DEMAND OF USF, THIS DOCUMENT, ALONG WITH ALL COPIES AND EXTRACTS, AND ALL RELATED NOTES AND ANALYSES, MUST BE RETURNED TO USF OR DESTROYED, AS INSTRUCTED BY USF. ACCEPTANCE OF THE DELIVERY OF THIS DOCUMENT CONSTITUTES AGREEMENT TO THESE TERMS AND CONDITIONS.

DESIGNER	TAC	DATE 8/24/04
CHECKER		DATE
ENGINEER	LLR	DATE 8/24/04
MANAGER		DATE
FILE:		
SCALE: none		

TITLE: WATER/CARBON SAMPLE PORT DETAIL

CLIENT: URS MUSCOY

USFilter

USFILTER/WESTATES
RED BLUFF, CA
1-800-795-2664

PROJECT	DRAWING	SHEET	REV
17520 OA	Sample.dwg	1 OF 1	

STD: 2-0600-8X11A | INTL REF:

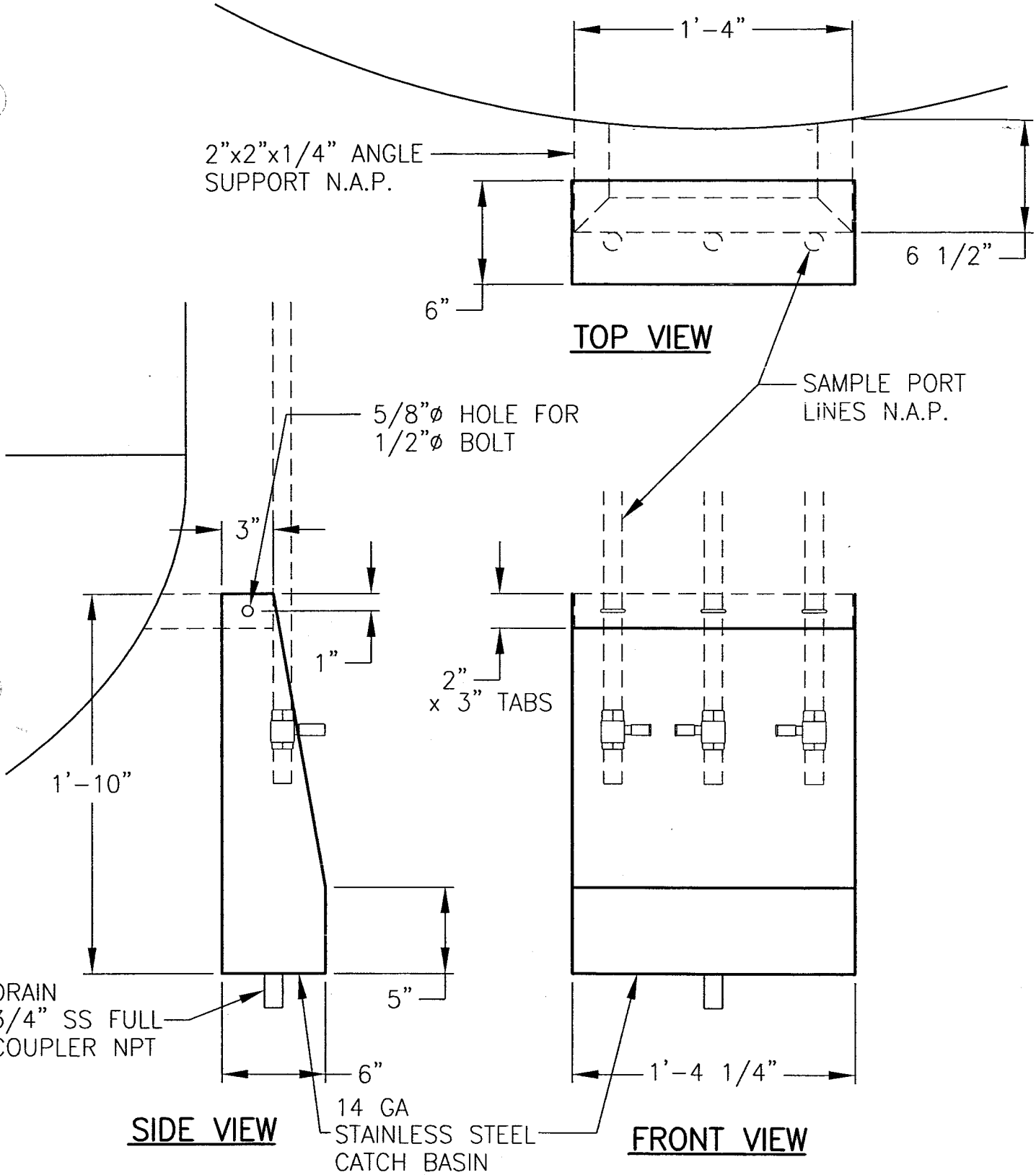

COMPANY CONFIDENTIAL
THIS DOCUMENT AND ALL INFORMATION CONTAINED HEREIN ARE THE PROPERTY OF THE USFILTER AND/OR ITS AFFILIATES ("USF"). THE DESIGN CONCEPTS AND INFORMATION CONTAINED HEREIN ARE PROPRIETARY TO USF AND ARE SUBMITTED IN CONFIDENCE. THEY ARE NOT TRANSFERABLE AND MUST BE USED ONLY FOR THE PURPOSE FOR WHICH THE DOCUMENT IS EXPRESSLY LOANED. THEY MUST NOT BE DISCLOSED, REPRODUCED, LOANED OR USED IN ANY OTHER MANNER WITHOUT THE EXPRESS WRITTEN CONSENT OF USF. IN NO EVENT SHALL THEY BE USED IN ANY MANNER DETRIMENTAL TO THE INTEREST OF USF. ALL PATENT RIGHTS ARE RESERVED. UPON THE DEMAND OF USF, THIS DOCUMENT, ALONG WITH ALL COPIES AND EXTRACTS, AND ALL RELATED NOTES AND ANALYSES, MUST BE RETURNED TO USF OR DESTROYED, AS INSTRUCTED BY USF. ACCEPTANCE OF THE DELIVERY OF THIS DOCUMENT CONSTITUTES AGREEMENT TO THESE TERMS AND CONDITIONS.

DESIGNER TAC	DATE 4/22/04	TITLE SS SAMPLE BASIN
CHECKER	DATE	
ENGINEER	DATE	CLIENT URS MUSCOY
MANAGER	DATE	USFilter USFILTER/WESTATES RED BLUFF, CA 1-800-795-2664
FILE:		
SCALE: 1"=8"		PROJECT / DRAWING SSsampleBasin / SHEET 1 OF 2 / REV

STD: 2-0600-8X11A | INTL REF:

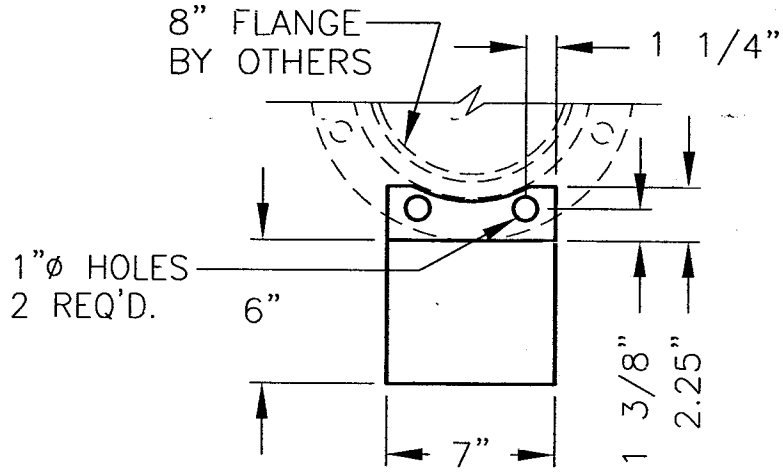

TOP VIEW

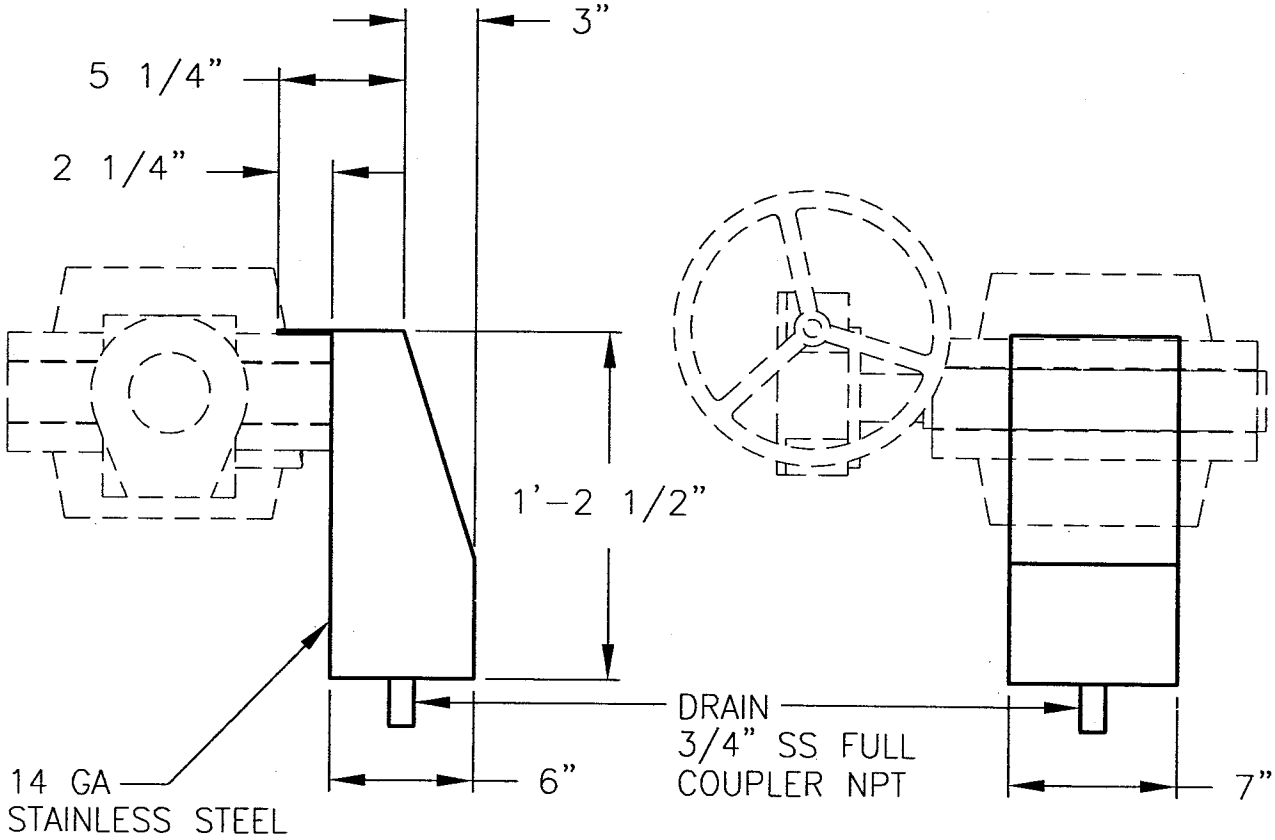

SIDE VIEW

FRONT VIEW

COMPANY CONFIDENTIAL
THIS DOCUMENT AND ALL INFORMATION CONTAINED HEREIN ARE THE PROPERTY OF THE USFILTER AND/OR ITS AFFILIATES ("USF"). THE DESIGN CONCEPTS AND INFORMATION CONTAINED HEREIN ARE PROPRIETARY TO USF AND ARE SUBMITTED IN CONFIDENCE. THEY ARE NOT TRANSFERABLE AND MUST BE USED ONLY FOR THE PURPOSE FOR WHICH THE DOCUMENT IS EXPRESSLY LOANED. THEY MUST NOT BE DISCLOSED, REPRODUCED, LOANED OR USED IN ANY OTHER MANNER WITHOUT THE EXPRESS WRITTEN CONSENT OF USF. IN NO EVENT SHALL THEY BE USED IN ANY MANNER DETRIMENTAL TO THE INTEREST OF USF. ALL PATENT RIGHTS ARE RESERVED. UPON THE DEMAND OF USF, THIS DOCUMENT, ALONG WITH ALL COPIES AND EXTRACTS, AND ALL RELATED NOTES AND ANALYSES, MUST BE RETURNED TO USF OR DESTROYED, AS INSTRUCTED BY USF. ACCEPTANCE OF THE DELIVERY OF THIS DOCUMENT CONSTITUTES AGREEMENT TO THESE TERMS AND CONDITIONS.

DESIGNER	DATE	TITLE
TAC	10/5/04	SS SAMPLE BASIN – MANIFOLD
CHECKER	DATE	
ENGINEER	DATE	CLIENT: URS MUSCOY
MANAGER	DATE	USFilter — USFILTER/WESTATES, RED BLUFF, CA, 1-800-795-2664
FILE:		
SCALE: 1'=8"		

PROJECT	DRAWING	SHEET	REV
	ManifoldSampleBasin	1 OF 2	