Carmichael Water District / Golden State Water Company Pipeline Conveyance Project

Kennedy Jenks Consultants

Sacramento
18 March 2014

Presented by
Steve Nugent
General Manager CWD

Kennedy/Jenks Consultants
Engineers & Scientists

Introduction

- Paul Schubert – GSWC
- Steve Nugent – CWD
- Alex Peterson – P.E.

Topics

- Background
- Pipeline Design
- Trenchless Drilling Technology
- Schedule
- Questions / Discussion

Background

- GSWC / CWD / Aerojet Rocketdyne
- GET Water wheeled to CWD Diversion
- CWD Bajamont Water Treatment Plant
- New Pipeline Crossing
  - 4.5 MGD all year
  - 7,000 feet, 24-inch pipe
  - Trenchless River Crossing
  - Tie-in at Rossmoor Dr and Coloma Rd

Pipeline Design

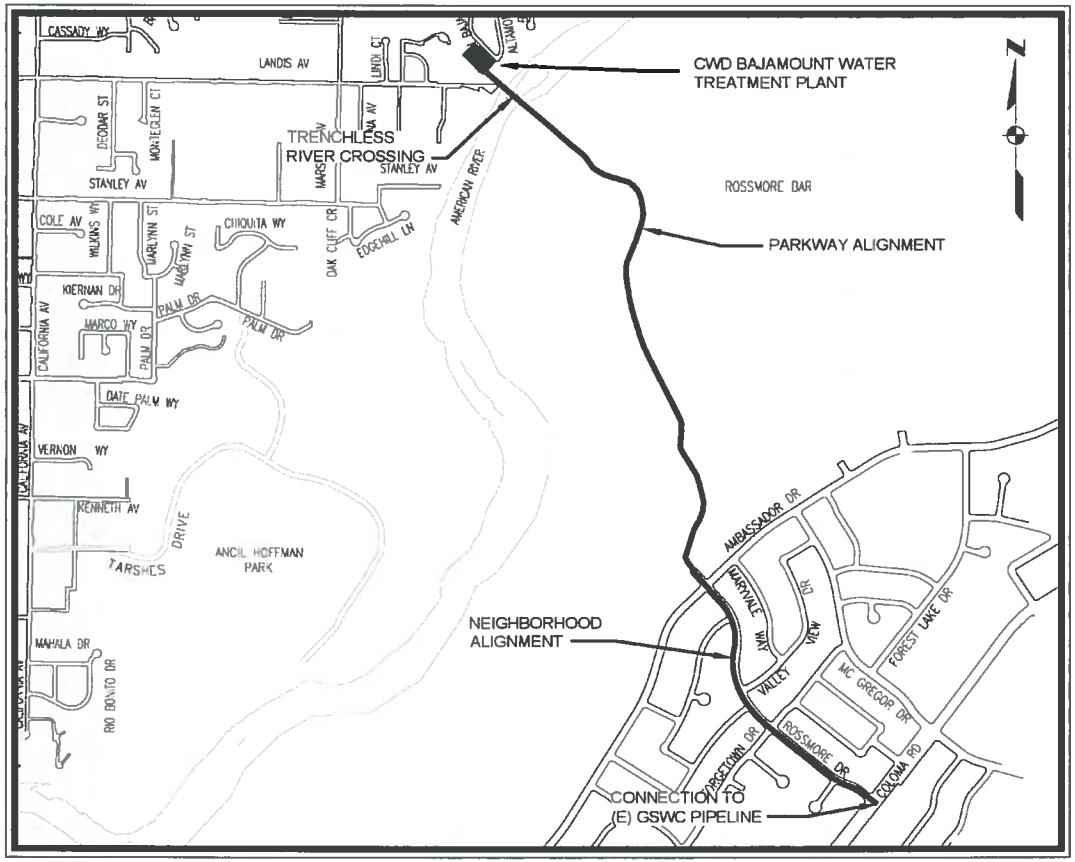

LOCATION MAP

SCALE: 1" = 1200' (APPROX)

Pipeline Design

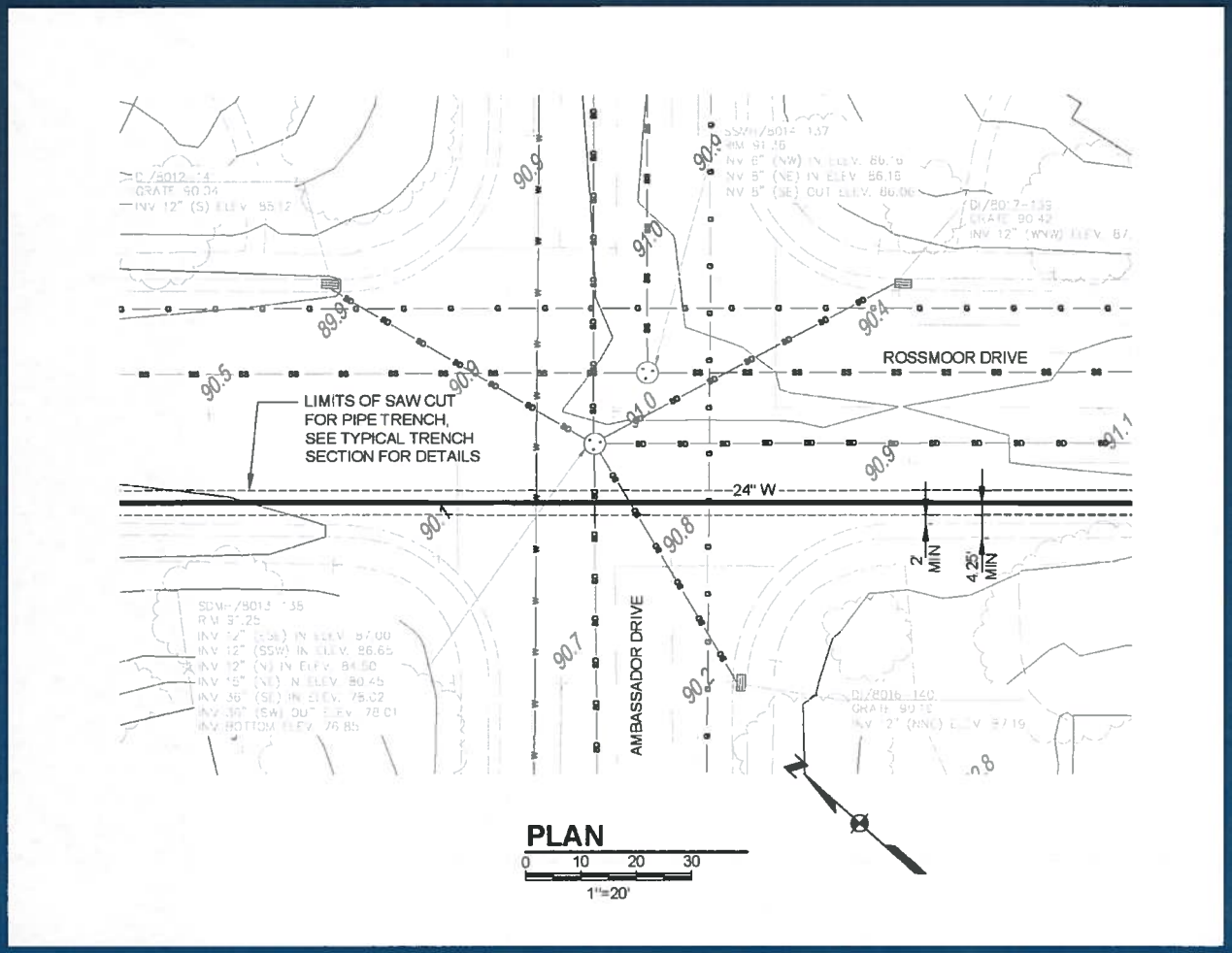

- 3 – 10 foot pipe depth

Pipeline Design Features

- Transmission Main (no services)
- Ductile Iron Pipe with HDPE River Crossing using HDD method
- Near edge of pavement to reduce street repair footprint

Pavement Restoration

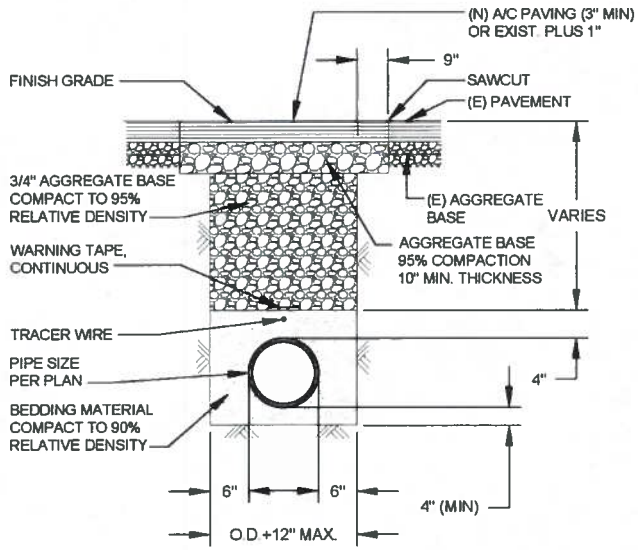

TYPICAL TRENCH SECTION THRU PAVED AREAS

SCALE: NONE

Pavement Restoration (con't)

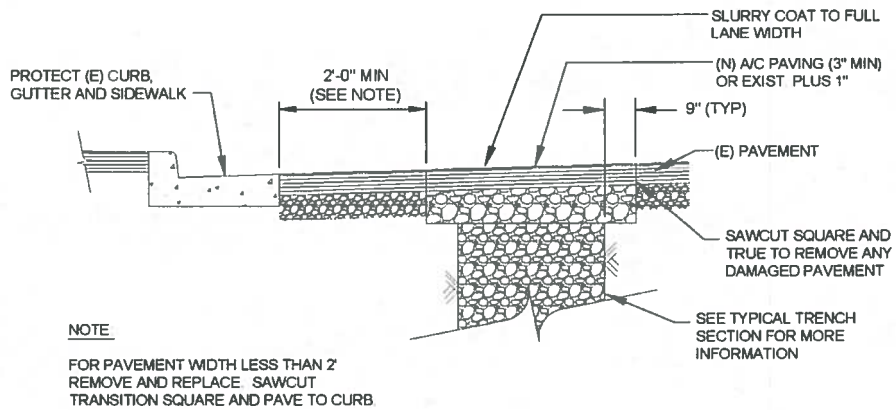

LIMITS OF PAVING

SCALE: NONE

Trenchless Drilling – Horizontal Directional Drilling

- Uses pressurized mud to cut a borehole
- Stabilizes the hole with drilling mud
- Upsizes the hole with a reamer
- Pulls fully assembled pipe into prepared bore in one continuous pull

Trenchless Drilling – Horizontal Directional Drilling

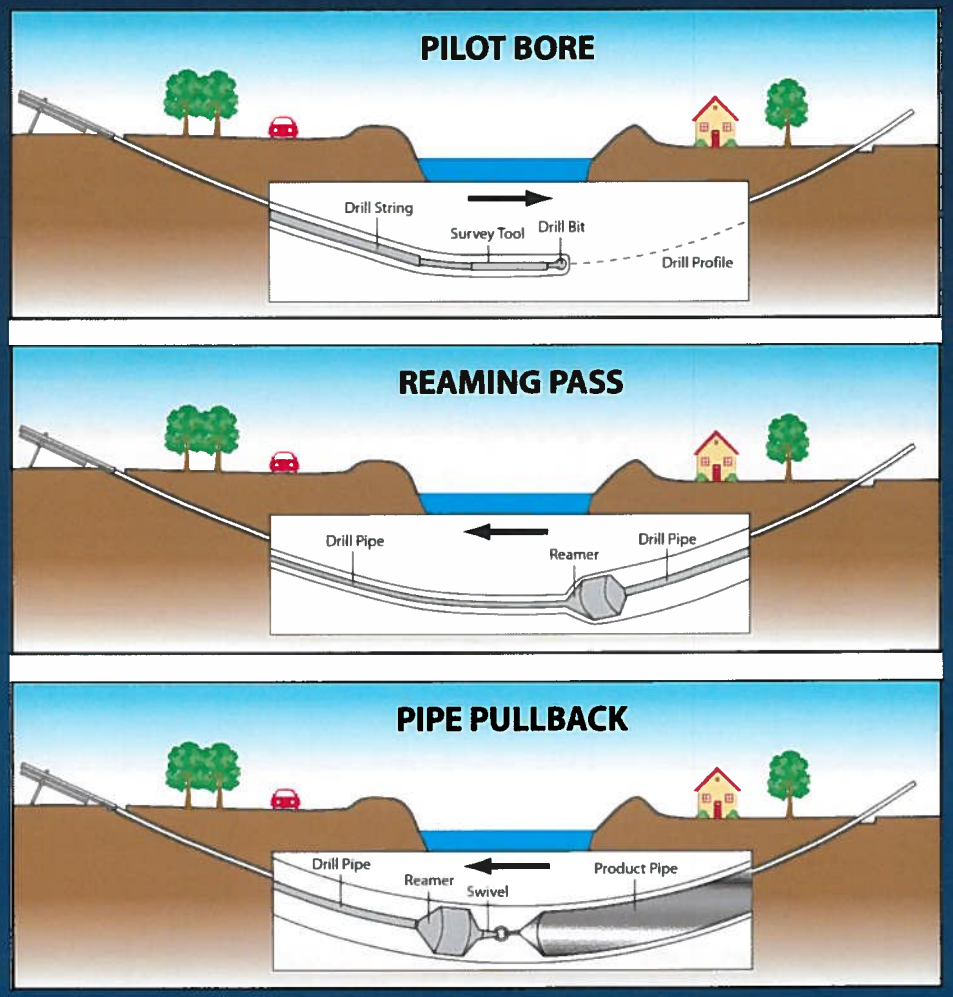

Trenchless Drilling – Horizontal Directional Drilling

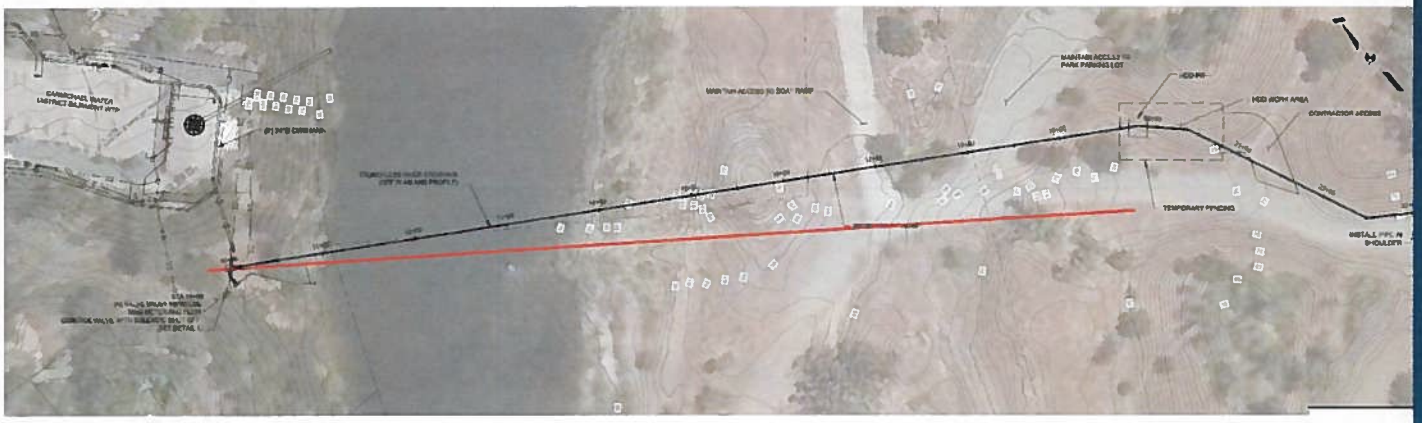

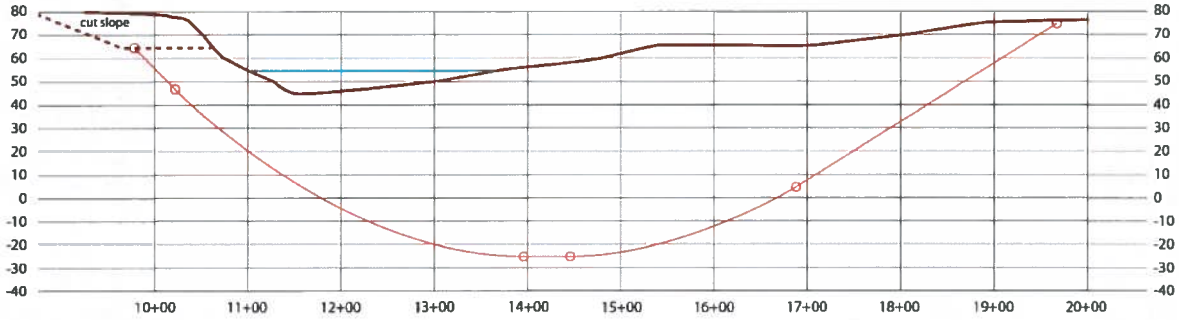

Schedule

- Design Completed– August 2014
- CEQA and Funding Completed– April 2015
- Permitting – Spring 2015
- Bidding – Spring 2015
- Construction – May 2015

Questions / Discussion