Initial Title V Permit Application for the Pacific Gas and Electric Company Colusa Generating Station

Prepared by
Atmospheric Dynamics, Inc.
Carmel-By-The-Sea, Ca.

ATMOSPHERIC DYNAMICS, INC
Meteorological & Air Quality Modeling

Prepared for
PG&E Colusa Generating Station
Maxwell, Ca.

August 2011

Revised December 2011

Table of Contents

Section 1 – District Application Forms

(These forms are based upon the CARB Title V permitting application forms which were converted to a more useable electronic format. Forms 3.17-I1 and 3.17-J2 were reformatted to provide for a more efficient use of the space provided versus the information requested.) Any supplemental tables or text are provided directly after the Form referencing the supplemental information.

Section 2 – Attachments

Section 1

STATIONARY SOURCE SUMMARY
(FORM 3.17-A1)

DISTRICT: Colusa County
COMPANY NAME: Pacific Gas and Electric Company

< DISTRICT USE ONLY = **District ID:**

Application #: **Application Received:**

Application Filing Fee: **Application Deemed Complete:**

I. FACILITY IDENTIFICATION

1. Facility Name: Colusa Generating Station (CGS) Facility Permit ID: 21006-259
2. Four digit SIC Code: 4911 (NAICS 221112) EPA Plant ID: PSD-SAC 06-11 ORIS Code: 56532
3. Parent Company (if different than Facility Name): Pacific Gas and Electric Company (PG&E)
4. Parent Company Mailing Address: 245 Market Street, San Francisco, CA. 94105
5. Facility Street Location: 4780 Dirks Road. Maxwell, CA. 95955
   Facility Mailing Address: P.O. Box 398, Maxwell, Ca. 95955
6. UTM Coordinates (if required): n/a
7. Source located within: 50 miles of the state line [ ] Yes [X] No
   50 miles of a Native American Nation [ ] Yes [ ] No [X] Not Applicable
8. Type of Organization: [X] Corporation [ ] Sole Ownership [ ] Government [ ] Partnership [ ] Utility Company
9. Legal Owner's Name: Pacific Gas and Electric Company
10. Owner's Agent Name (if any): Steve Royall
11. Responsible Official: Randal S. Livingston, Vice-President
12. Plant Site Manager/Contact: Steve Royall Telephone #:530-934-9098
13. Type of facility: Electric generating facility
14. General description of processes/products: Electricity production
15. Does your facility store, or otherwise handle, greater than threshold quantities of any substance on the Section 112(r) List of Substances and their Thresholds (see Attachment A)? [X] Yes [ ] No
16. Is a Federal Risk Management Plan [pursuant to Section 112(r)] required? [ ] Not Applicable [X] Yes [ ] No
    (If yes, attach verification that Risk Management Plan is registered with appropriate agency or description of status of Risk Management Plan submittal.)

STATIONARY SOURCE SUMMARY
(FORM 3.17-A2)

DISTRICT: Colusa County	**< DISTRICT USE ONLY =**
	DISTRICT ID:
COMPANY NAME: PG&E	**FACILITY NAME: CGS**

II. TYPE OF PERMIT ACTION

	CURRENT PERMIT (permit number)	**EXPIRATION** (date)
X Initial Title V Application		
G Permit Renewal		
G Significant Permit Modification		
G Minor Permit Modification		
G Administrative Amendment		

III. DESCRIPTION OF PERMIT ACTION

1. Does the permit action requested involve: a: [N] Portable Source [N] Voluntary Emissions Caps
   [Y] Acid Rain Source [N] Alternative Operating Scenarios
   [N] Source Subject to MACT Requirements [Section 112]

   b: [ ] None of the options in 1.a. are applicable

2. Is source operating under Compliance Schedule? [ ] Yes [X] No

3. For permit modifications, provide a general description of the proposed permit modification: n/a

TOTAL STATIONARY SOURCE EMISSIONS
(FORM 3.17-B)

DISTRICT: Colusa County	**< DISTRICT USE ONLY =**
	DISTRICT ID:
COMPANY NAME: PG&E	**FACILITY NAME: CGS**

I. TOTAL STATIONARY SOURCE EMISSIONS

Provide a brief description of operating scenario: Baseload electric power production facility.

(Potential emissions limits from Att J, Condition 14.)

POLLUTANT (name)	**POTENTIAL EMISSIONS, Permit Limits** (tons per year)	**PRE-MODIFICATION EMISSIONS** (tons per year)	**EMISSIONS CHANGE** (tons per year)
NOx	184.7	n/a	n/a
CO	267.9	n/a	n/a
VOC	47.5	n/a	n/a
SOx	15.7	n/a	n/a
PM10/PM2.5	103.4	n/a	n/a
NH3	168.2	n/a	n/a
CO2e	~2,541,420 (not a permit limit)	n/a	n/a
HAPs	<10/25 (see Att J, Cond #12)		

COMBUSTION EMISSION UNIT
(FORM 3.17-C1)

DISTRICT: Colusa County	**< DISTRICT USE ONLY =**
	DISTRICT ID:
COMPANY NAME: PG&E	**FACILITY NAME: CGS**

I. PERMIT NUMBER: 21006-259

II. EMISSION UNIT DESCRIPTION

1. Equipment type: Combustion turbine #1
2. Equipment description: Frame type combustion turbine
3. Equipment make, model & serial number: GE 7FA
4. Maximum design process rate or maximum power input/output: 172 MW @ ISO Conditions
5. Primary use: Electricity generation
6. Burner(s) design, operating temperature and capacity: 1790 mmbtu/hr @ ISO Conditions
7. Control device(s) type and description (if any): SCR and CO Catalyst

III. OPERATIONAL INFORMATION

1. Operating schedule: 24 (hours/day) 8760 (hours/year)
2. Exhaust gas properties (temperature, SCFM, %H2O, %O2 or %CO2, % excess air): (see turbine spec sheet, next page)
3. Fuel specifications: see Att N

FUEL TYPE (name)	**ANNUAL USAGE** (c.f./yr, lb/yr, gal/yr)	**HEATING VALUE** (BTU/lb or BTU/gal)	**SULFUR** (%)	**NITROGEN** (%)
Natural gas	~ 15525 mmscf/yr	~1010 btu/scf (variable)	<0.3 grs/100scf	variable

COMBUSTION EMISSION UNIT
(FORM 3.17-C2)

DISTRICT: Colusa County	**< DISTRICT USE ONLY =**
	DISTRICT ID:
COMPANY NAME: PG&E	**FACILITY NAME: CGS**

4. Unit emissions: **(Actual reported operations emissions for calendar year 2010)(Commissioning emissions are included)**

CRITERIA POLLUTANT EMISSIONS (tons per year)					
POLLUTANTS	NOx	CO	VOC	SOx	PM10/PM2.5
A. Emissions	16.86	53.01	0.068	0.405	3.07
B. Pre-modification Emissions[1]	n/a	n/a	n/a	n/a	n/a
C. Emission Change[2]	n/a	n/a	n/a	n/a	n/a
D. Emission Limit[3]					

OTHER REGULATED AIR POLLUTANT EMISSIONS (tons per year)					
POLLUTANTS	HAPs total	CO2e	NH3		
A. Emissions	See Att K		29.25		
B. Pre-Modification Emissions[1]	n/a	n/a	n/a	n/a	n/a
C. Emission Change[2]	n/a	n/a	n/a	n/a	n/a
D. Emission Limit[3]	10/25	n/a			

[1] *For permit modifications only; emissions prior to project modification.*
[2] *Difference between Pre-Modification Emissions (Section B.) and Emissions (Section A.).*
[3] *For voluntary emissions cap and emission limits [i.e. expressed as parts per million (ppm) corrected for dilution air, pounds per hour (lbs/hr), pounds per million BTU (lb/MMBTU, etc.] required by any applicable federal requirement.*

*FACILITY HAPS ARE LESS THAN 10 TPY OF ANY SINGLE HAP, AND LESS THAN 25 TPY TOTAL ALL HAPS.

GE-7FA General Operating Data

		ISO Conditions			Summer Peak Conditions			Winter Minimum Conditions		
		Case A	Case B	Case C	Case A	Case B	Case C	Case A	Case B	Case C
		Max	Avg	Min	Max	Avg	Min	Max	Avg	Min
Operating Conditions										
Ambient Dry Bulb Temp.	deg. F	59	59	59	104	104	104	34	34	34
Ambient Wet Bulb Temp.	deg. F	51	51	51	70	70	70	32	32	32
Relative Humidity	%	60%	60%	60%	18%	18%	18%	83%	83%	83%
Ambient Pressure	psia	14.68	14.68	14.68	14.68	14.68	14.68	14.68	14.68	14.68
Inlet Air										
N_2	mole % dry	78.04%	78.04%	78.04%	78.04%	78.04%	78.04%	78.04%	78.04%	78.04%
O_2	mole % dry	20.99%	20.99%	20.99%	20.99%	20.99%	20.99%	20.99%	20.99%	20.99%
CO_2	mole % dry	0.03%	0.03%	0.03%	0.03%	0.03%	0.03%	0.03%	0.03%	0.03%
Ar	mole % dry	0.94%	0.94%	0.94%	0.94%	0.94%	0.94%	0.94%	0.94%	0.94%
Total		100.00%	100.00%	100.00%	100.00%	100.00%	100.00%	100.00%	100.00%	100.00%
Molecular Weight, dry air		28.97	28.97	28.97	28.97	28.97	28.97	28.97	28.97	28.97
Dry Bulb Temperature	deg. F	53.5	59.0	59.0	75.5	104.4	104.4	34.0	34.0	34.0
Moisture Content of Ambient Air	lb H_2O/lb air	0.0064	0.0064	0.0064	0.0082	0.0082	0.0082	0.0034	0.0034	0.0034
Moisture Content of Inlet Air	lb H_2O/lb air	0.0076	0.0064	0.0064	0.0149	0.0082	0.0082	0.0034	0.0034	0.0034
Relative Humidity of Inlet Air	%	88%	60%	60%	78%	18%	18%	83%	83%	83%
Moisture Content	moles H_2O/mole air	0.012	0.010	0.010	0.024	0.013	0.013	0.005	0.005	0.005
N_2	mole %	77.09%	77.25%	77.25%	76.22%	77.02%	77.02%	77.61%	77.61%	77.61%
O_2	mole %	20.74%	20.78%	20.78%	20.50%	20.72%	20.72%	20.88%	20.88%	20.88%
CO_2	mole %	0.03%	0.03%	0.03%	0.03%	0.03%	0.03%	0.03%	0.03%	0.03%
H_2O	mole %	1.21%	1.01%	1.01%	2.34%	1.30%	1.30%	0.55%	0.55%	0.55%
Ar	mole %	0.93%	0.93%	0.93%	0.92%	0.93%	0.93%	0.93%	0.93%	0.93%
Total		100.00%	100.00%	100.00%	100.00%	100.00%	100.00%	100.00%	100.00%	100.00%
Molecular Weight		28.83	28.86	28.86	28.71	28.82	28.82	28.91	28.91	28.91

GE-7FA General Operating Data

		ISO Conditions			Summer Peak Conditions			Winter Minimum Conditions		
		Case A	Case B	Case C	Case A	Case B	Case C	Case A	Case B	Case C
		Max	Avg	Min	Max	Avg	Min	Max	Avg	Min
Combustion Turbine Exhaust										
Excess Combustion Air	%	**163.8%**	**158.3%**	**176.7%**	**166.7%**	**167.6%**	**191.3%**	**161.8%**	**155.8%**	**169.4%**
N_2	lb/hr	3,016,114	2,431,819	2,015,898	2,964,181	2,312,374	2,032,170	3,061,989	2,674,949	2,013,044
O_2	lb/hr	575,145	457,642	395,396	569,015	444,768	409,850	581,175	500,285	388,772
CO_2	lb/hr	246,642	203,099	157,200	239,767	186,434	150,625	252,287	225,572	161,202
H_2O	lb/hr	226,443	181,896	141,853	248,832	173,208	141,642	214,285	191,339	137,148
Ar	lb/hr	51,786	41,753	34,613	50,894	39,703	34,893	52,573	45,927	34,564
Total Exhaust Flow	lb/hr	4,116,130	3,316,209	2,744,960	4,072,690	3,156,487	2,769,180	4,162,310	3,638,072	2,734,730
Manufacturer's Exhaust Flow	lb/hr	**4,116,130**	**3,316,209**	**2,744,960**	**4,072,690**	**3,156,487**	**2,769,180**	**4,162,310**	**3,638,072**	**2,734,730**
N_2	mass %	73.28%	73.33%	73.44%	72.78%	73.26%	73.39%	73.56%	73.53%	73.61%
O_2	mass %	13.97%	13.80%	14.40%	13.97%	14.09%	14.80%	13.96%	13.75%	14.22%
CO_2	mass %	5.99%	6.12%	5.73%	5.89%	5.91%	5.44%	6.06%	6.20%	5.89%
H_2O	mass %	5.50%	5.49%	5.17%	6.11%	5.49%	5.11%	5.15%	5.26%	5.02%
Ar	mass %	1.26%	1.26%	1.26%	1.25%	1.26%	1.26%	1.26%	1.26%	1.26%
Total		100.00%	100.00%	100.00%	100.00%	100.00%	100.00%	100.00%	100.00%	100.00%
N_2	moles/hr	107,667	86,809	71,962	105,813	82,545	72,543	109,304	95,488	71,860
O_2	moles/hr	17,974	14,302	12,357	17,782	13,899	12,808	18,162	15,634	12,150
CO_2	moles/hr	5,620	4,628	3,582	5,463	4,248	3,432	5,749	5,140	3,673
H_2O	moles/hr	12,569	10,097	7,874	13,812	9,614	7,862	11,895	10,621	7,613
Ar	moles/hr	1,296	1,045	866	1,274	994	873	1,316	1,150	865
Total	moles/hr	145,126	116,881	96,641	144,145	111,301	97,519	146,426	128,033	96,161
N_2	mole %	74.19%	74.27%	74.46%	73.41%	74.16%	74.39%	74.65%	74.58%	74.73%
O_2	mole %	12.38%	12.24%	12.79%	12.34%	12.49%	13.13%	12.40%	12.21%	12.63%
CO_2	mole %	3.87%	3.96%	3.71%	3.79%	3.82%	3.52%	3.93%	4.01%	3.82%
H_2O	mole %	8.66%	8.64%	8.15%	9.58%	8.64%	8.06%	8.12%	8.30%	7.92%
Ar	mole %	0.89%	0.89%	0.90%	0.88%	0.89%	0.90%	0.90%	0.90%	0.90%
Total		100.00%	100.00%	100.00%	100.00%	100.00%	100.00%	100.00%	100.00%	100.00%
Molecular Weight		28.37	28.38	28.41	28.26	28.36	28.40	28.43	28.42	28.44

COMBUSTION EMISSION UNIT
(FORM 3.17-C1)

DISTRICT: Colusa County	**< DISTRICT USE ONLY =**
	DISTRICT ID:
COMPANY NAME: PG&E	**FACILITY NAME: CGS**

I. PERMIT NUMBER: 21006-259

II. EMISSION UNIT DESCRIPTION

1. Equipment type: Combustion turbine #2
2. Equipment description: Frame type combustion turbine
3. Equipment make, model & serial number: GE 7FA
4. Maximum design process rate or maximum power input/output: 172 MW @ ISO Conditions
5. Primary use: Electricity generation
6. Burner(s) design, operating temperature and capacity: 1790 mmbtu/hr @ ISO Conditions
7. Control device(s) type and description (if any): SCR and CO Catalyst

III. OPERATIONAL INFORMATION

1. Operating schedule: 24 (hours/day) 8760 (hours/year)
2. Exhaust gas properties (temperature, SCFM, %H2O, %O2 or %CO2, % excess air): (see turbine spec sheet for turbine #1)
3. Fuel specifications: see Att N

FUEL TYPE (name)	**ANNUAL USAGE** (c.f./yr, lb/yr, gal/yr)	**HEATING VALUE** (BTU/lb or BTU/gal)	**SULFUR** (%)	**NITROGEN** (%)
Natural gas	~ 15525 mmscf/yr	~1010 btu/scf (variable)	<0.3 grs/100scf	variable

COMBUSTION EMISSION UNIT
(FORM 3.17-C2)

DISTRICT: Colusa County	**< DISTRICT USE ONLY =**
	DISTRICT ID:
COMPANY NAME: PG&E	**FACILITY NAME: CGS**

4. Unit emissions: **(Actual reported operations emissions for calendar year 2010)(Commissioning emissions are included)**

CRITERIA POLLUTANT EMISSIONS (tons per year)					
POLLUTANTS	NOx	CO	VOC	SOx	PM10/PM2.5
A. Emissions	15.06	27.79	0.063	0.377	2.56
B. Pre-modification Emissions[1]	n/a	n/a	n/a	n/a	n/a
C. Emission Change[2]	n/a	n/a	n/a	n/a	n/a
D. Emission Limit[3]					

OTHER REGULATED AIR POLLUTANT EMISSIONS (tons per year)					
POLLUTANTS	HAPs total	CO2e	NH3		
A. Emissions	See Att K		25.7		
B. Pre-Modification Emissions[1]	n/a	n/a	n/a	n/a	n/a
C. Emission Change[2]	n/a	n/a	n/a	n/a	n/a
D. Emission Limit[3]	10/25	n/a			

[1] *For permit modifications only; emissions prior to project modification.*
[2] *Difference between Pre-Modification Emissions (Section B.) and Emissions (Section A.).*
[3] *For voluntary emissions cap and emission limits [i.e. expressed as parts per million (ppm) corrected for dilution air, pounds per hour (lbs/hr), pounds per million BTU (lb/MMBTU, etc.] required by any applicable federal requirement.*

*FACILITY HAPS ARE LESS THAN 10 TPY OF ANY SINGLE HAP, AND LESS THAN 25 TPY TOTAL ALL HAPS.

COMBUSTION EMISSION UNIT
(FORM 3.17-C1)

DISTRICT: Colusa County	**< DISTRICT USE ONLY =**
	DISTRICT ID:
COMPANY NAME: PG&E	**FACILITY NAME: CGS**

I. PERMIT NUMBER: 21006-259

II. EMISSION UNIT DESCRIPTION

1. Equipment type: Boiler #1
2. Equipment description: HRSG with duct burners
3. Equipment make, model & serial number: Nooter Erickson
4. Maximum design process rate or maximum power input/output: 688 mmbtu/hr @ ISO Conditions
5. Primary use: steam production for ~320 MW steam turbine
6. Burner(s) design, operating temperature and capacity: 688 mmbtu/hr
7. Control device(s) type and description (if any): SCR and CO Catalyst

III. OPERATIONAL INFORMATION

1. Operating schedule: 24 (hours/day) 8760 (hours/year)
2. Exhaust gas properties (temperature, SCFM, %H2O, %O2 or %CO2, % excess air): (see turbine spec sheet for turbine #1)
3. Fuel specifications: see Att N

FUEL TYPE (name)	**ANNUAL USAGE** (c.f./yr, lb/yr, gal/yr)	**HEATING VALUE** (BTU/lb or BTU/gal)	**SULFUR** (%)	**NITROGEN** (%)
Natural gas	2653 mmscf/yr	~1010 btu/scf (variable)	<0.3 grs/100scf	variable

COMBUSTION EMISSION UNIT
(FORM 3.17-C2)

DISTRICT: Colusa County	**< DISTRICT USE ONLY =**
	DISTRICT ID:
COMPANY NAME: PG&E	**FACILITY NAME: CGS**

4. Unit emissions: **(Actual Reported emissions for calendar year 2010)**

CRITERIA POLLUTANT EMISSIONS (tons per year)					
POLLUTANTS	NOx	CO	VOC	SOx	PM10/PM2.5
A. Emissions	See emissions for turbine #1				
B. Pre-modification Emissions[1]	n/a	n/a	n/a	n/a	n/a
C. Emission Change[2]	n/a	n/a	n/a	n/a	n/a
D. Emission Limit[3]	n/a	n/a	n/a	n/a	n/a

OTHER REGULATED AIR POLLUTANT EMISSIONS (tons per year)					
POLLUTANTS	HAPs total	CO2e	NH3		
A. Emissions	See emissions for turbine #1				
B. Pre-Modification Emissions[1]	n/a	n/a	n/a	n/a	n/a
C. Emission Change[2]	n/a	n/a	n/a	n/a	n/a
D. Emission Limit[3]	n/a	n/a	n/a	n/a	n/a

[1] *For permit modifications only; emissions prior to project modification.*
[2] *Difference between Pre-Modification Emissions (Section B.) and Emissions (Section A.).*
[3] *For voluntary emissions cap and emission limits [i.e. expressed as parts per million (ppm) corrected for dilution air, pounds per hour (lbs/hr), pounds per million BTU (lb/MMBTU, etc.] required by any applicable federal requirement.*

*FACILITY HAPS ARE LESS THAN 10 TPY OF ANY SINGLE HAP, AND LESS THAN 25 TPY TOTAL ALL HAPS.

COMBUSTION EMISSION UNIT
(FORM 3.17-C1)

DISTRICT: Colusa County	**< DISTRICT USE ONLY =**
	DISTRICT ID:
COMPANY NAME: PG&E	**FACILITY NAME: CGS**

I. PERMIT NUMBER: 21006-259

II. EMISSION UNIT DESCRIPTION

1. Equipment type: Boiler #2
2. Equipment description: HRSG with duct burners
3. Equipment make, model & serial number: Nooter Erickson
4. Maximum design process rate or maximum power input/output: 688 mmbtu/hr @ ISO Conditions
5. Primary use: steam production for ~320 MW steam turbine
6. Burner(s) design, operating temperature and capacity: 688 mmbtu/hr
7. Control device(s) type and description (if any): SCR and CO Catalyst

III. OPERATIONAL INFORMATION

1. Operating schedule: 24 (hours/day) 8760 (hours/year)
2. Exhaust gas properties (temperature, SCFM, %H2O, %O2 or %CO2, % excess air): (see turbine spec sheet for turbine #1)
3. Fuel specifications: see Att N

FUEL TYPE (name)	**ANNUAL USAGE** (c.f./yr, lb/yr, gal/yr)	**HEATING VALUE** (BTU/lb or BTU/gal)	**SULFUR** (%)	**NITROGEN** (%)
Natural gas	2653 mmscf/yr	~1010 btu/scf (variable)	<0.3 grs/100scf	variable

COMBUSTION EMISSION UNIT
(FORM 3.17-C2)

DISTRICT: Colusa County	**< DISTRICT USE ONLY =**
	DISTRICT ID:
COMPANY NAME: PG&E	**FACILITY NAME: CGS**

4. Unit emissions: **(Actual Reported emissions for calendar year 2010)**

CRITERIA POLLUTANT EMISSIONS (tons per year)					
POLLUTANTS	NOx	CO	VOC	SOx	PM10/PM2.5
A. Emissions	See emissions for turbine #2				
B. Pre-modification Emissions[1]	n/a	n/a	n/a	n/a	n/a
C. Emission Change[2]	n/a	n/a	n/a	n/a	n/a
D. Emission Limit[3]	n/a	n/a	n/a	n/a	n/a

OTHER REGULATED AIR POLLUTANT EMISSIONS (tons per year)					
POLLUTANTS	HAPs total	CO2e	NH3		
A. Emissions	See emissions for turbine #2				
B. Pre-Modification Emissions[1]	n/a	n/a	n/a	n/a	n/a
C. Emission Change[2]	n/a	n/a	n/a	n/a	n/a
D. Emission Limit[3]	n/a	n/a	n/a	n/a	n/a

[1] *For permit modifications only; emissions prior to project modification.*
[2] *Difference between Pre-Modification Emissions (Section B.) and Emissions (Section A.).*
[3] *For voluntary emissions cap and emission limits [i.e. expressed as parts per million (ppm) corrected for dilution air, pounds per hour (lbs/hr), pounds per million BTU (lb/MMBTU, etc.] required by any applicable federal requirement.*

*FACILITY HAPS ARE LESS THAN 10 TPY OF ANY SINGLE HAP, AND LESS THAN 25 TPY TOTAL ALL HAPS.

COMBUSTION EMISSION UNIT
(FORM 3.17-C1)

DISTRICT: Colusa County	**< DISTRICT USE ONLY =**
	DISTRICT ID:
COMPANY NAME: PG&E	**FACILITY NAME: CGS**

I. PERMIT NUMBER: 21006-259

II. EMISSION UNIT DESCRIPTION

1. Equipment type: Water heater
2. Equipment description: Water bath heater
3. Equipment make, model & serial number: n/a
4. Maximum design process rate or maximum power input/output: 10 mmbtu/hr
5. Primary use: fuel pre-heating
6. Burner(s) design, operating temperature and capacity: 10 mmbtu/hr
7. Control device(s) type and description (if any): Low Nox burners

III. OPERATIONAL INFORMATION

1. Operating schedule: 24 (hours/day) 8760 (hours/year)
2. Exhaust gas properties (temperature, SCFM, %H2O, %O2 or %CO2, % excess air): not available
3. Fuel specifications: see Att N

FUEL TYPE (name)	**ANNUAL USAGE** (c.f./yr, lb/yr, gal/yr)	**HEATING VALUE** (BTU/lb or BTU/gal)	**SULFUR** (%)	**NITROGEN** (%)
Natural gas	86.73 mmscf/yr	~1010 btu/scf (variable)	<0.3 grs/100scf	variable

COMBUSTION EMISSION UNIT
(FORM 3.17-C2)

DISTRICT: Colusa County	**< DISTRICT USE ONLY =**
	DISTRICT ID:
COMPANY NAME: PG&E	**FACILITY NAME: CGS**

4. Unit emissions: **(Actual Reported emissions for calendar year 2010)**

CRITERIA POLLUTANT EMISSIONS (tons per year)					
POLLUTANTS	NOx	CO	VOC	SOx	PM10/PM2.5
A. Emissions	0.2	0.4	0.015	0.015	0.015
B. Pre-modification Emissions[1]	n/a	n/a	n/a	n/a	n/a
C. Emission Change[2]	n/a	n/a	n/a	n/a	n/a
D. Emission Limit[3]	1.71	3.46	0.131	0.131	0.131

OTHER REGULATED AIR POLLUTANT EMISSIONS (tons per year)					
POLLUTANTS	HAPs total	CO2e			
A. Emissions	See Att K				
B. Pre-Modification Emissions[1]	n/a	n/a	n/a	n/a	n/a
C. Emission Change[2]	n/a	n/a	n/a	n/a	n/a
D. Emission Limit[3]			n/a	n/a	n/a

[1] *For permit modifications only; emissions prior to project modification.*
[2] *Difference between Pre-Modification Emissions (Section B.) and Emissions (Section A.).*
[3] *For voluntary emissions cap and emission limits [i.e. expressed as parts per million (ppm) corrected for dilution air, pounds per hour (lbs/hr), pounds per million BTU (lb/MMBTU, etc.] required by any applicable federal requirement.*

*FACILITY HAPS ARE LESS THAN 10 TPY OF ANY SINGLE HAP, AND LESS THAN 25 TPY TOTAL ALL HAPS.

COATING / SOLVENT EMISSION UNIT
(FORM 3.17-D1)

DISTRICT: Colusa County	**< DISTRICT USE ONLY =**
	DISTRICT ID:
COMPANY NAME: PG&E	**FACILITY NAME: CGS**

I. PERMIT NUMBER: (THIS FORM IS NOT APPLICABLE TO THE FACILITY)

II. EQUIPMENT DESCRIPTION

1. Equipment type:
2. Equipment description:
3. Equipment make, model & serial number:
4. Maximum design process rate or throughput:
5. Control device(s) type and description (if any):
6. Description of coating/solvent application/drying method(s) employed including coating transfer:
7. List and describe primary coating/solvent process equipment used:

III. OPERATIONAL INFORMATION

1. Operating schedule: (hours/day): (hours/year)
2. Coatings/solvents information:

COATING/ SOLVENT (name)	**MANUFACTURER** (name)	**MAXIMUM USE** (gal/day, gal/yr)	**VAPOR PRESSURE** (mm of Hg)	**SOLIDS CONTENT** (%)	**VOC CONTENT** (%)
n/a	n/a	n/a	n/a	n/a	n/a

COATING / SOLVENT EMISSION UNIT
(FORM 3.17-D2)

DISTRICT: Colusa County	**< DISTRICT USE ONLY =**
	DISTRICT ID:
COMPANY NAME: PG&E	**FACILITY NAME: CGS**

3. Unit emissions:

CRITERIA POLLUTANT EMISSIONS (tons per year)					
POLLUTANTS					
A. Emissions	n/a	n/a	n/a	n/a	n/a
B. Pre-modification Emissions[1]					
C. Emission Change[2]					
D. Emission Limit[3]					
OTHER REGULATED AIR POLLUTANT EMISSIONS (tons per year)					
POLLUTANTS					
A. Emissions	n/a	n/a	n/a	n/a	n/a
B. Pre-modification Emissions[1]					
C. Emission Change[2]					
D. Emission Limit[3]					

[1] *For permit modifications only; emissions prior to project modification.*
[2] *Difference between Pre-Modification Emissions (Section B.) and Emissions (Section A.).*
[3] *For voluntary emissions cap and emission limits [i.e. expressed as parts per million (ppm) corrected for dilution air, pounds per hour (lbs/hr), pounds per million BTU (lb/MMBTU, etc.] required by any applicable federal requirement.*

ORGANIC LIQUID STORAGE UNIT
(FORM 3.17-E1)

DISTRICT: Colusa County	**< DISTRICT USE ONLY =**
	DISTRICT ID:
COMPANY NAME: PG&E	**FACILITY NAME: CGS**

I. PERMIT NUMBER: 21006-259 (THIS FORM IS NOT APPLICABLE TO THE FACILITY)

II. EQUIPMENT DESCRIPTION

1. Equipment type:
2. Equipment description:
3. Equipment make, model & serial number:
4. Control device(s) type and description (if any):

III. OPERATIONAL INFORMATION

1. Operating schedule: (hours/day) (hours/year)
2. Raw material used or processed:

ORGANIC LIQUID	VAPOR PRESSURE (psi)	BOILING POINT (F)	STORAGE TEMPERATURE (F)	LIQUID THROUGHPUT (gals/year)
n/a	n/a	n/a	n/a	n/a

3. Total annual throughput: (1000 gallons)
4. Profile of material throughput: Jan-Mar (% of total) April-June (% of total) July-Sep (% of total) Oct-Dec (% of total)

IV. TANK DESIGN AND SPECIFICATIONS

1. Tank design: [ ] Floating Roof (external) [ ] Floating Roof (internal) [ ] Fixed Roof [ ] Underground [ ] Pressure [ ] Other:
2. Tank specifications: Max Fill Rate: (gals/hr) Max Withdrawal: (gal/hr) Height: (ft) Vapor Space: (ft) Diameter: (ft) Paint color: Capacity: (gal)
3. Shell type: [ ] Gunited [ ] Riveted [ ] Welded [ ] Other:

ORGANIC LIQUID STORAGE UNIT
(FORM 3.17-E2)

DISTRICT: Colusa County	**< DISTRICT USE ONLY =**
	DISTRICT ID:
COMPANY NAME: PG&E	**FACILITY NAME: CGS**

4. Roof type: [ ] Pan [ ] Pontoon [ ] Other:

5. Tank Seals: [ ] Single Seal [ ] Double Seal

Primary Seal Shoe Type:
[ ] Metallic Shoe
[ ] Vapor Mounted Resilient Seal
[ ] Liquid Mounted Resilient Seal
[ ] Wiper Seal
[ ] Other:

Secondary Seal Shoe Type:
[ ] Shoe Mounted Wiper Seal
[ ] Rim Mounted Wiper Seal
[ ] Weathershield
[ ] Other:

6. Unit emissions:

CRITERIA POLLUTANT EMISSIONS (tons per year)					
POLLUTANTS	VOC				
A. Emissions	n/a	n/a	n/a	n/a	n/a
B. Pre-modification Emissions[1]	n/a				
C. Emission Change[2]	n/a				
D. Emission Limit[3]	n/a				
OTHER REGULATED AIR POLLUTANT EMISSIONS (tons per year)					
POLLUTANTS					
A. Emissions	n/a	n/a	n/a	n/a	n/a
B. Pre-modification Emissions[1]					
C. Emission Change[2]					
D. Emission Limit[3]					

[1] *For permit modifications only; emissions prior to project modification.*
[2] *Difference between Pre-Modification Emissions (Section B.) and Emissions (Section A.).*
[3] *For voluntary emissions cap and emission limits [i.e. expressed as parts per million (ppm) corrected for dilution air, pounds per hour (lbs/hr), pounds per million BTU (lb/MMBTU, etc.] required by any applicable federal requirement.*

GENERAL EMISSION UNIT
(FORM 3.17-F1)

DISTRICT: Colusa County	**< DISTRICT USE ONLY =**
	DISTRICT ID:
COMPANY NAME: PG&E	**FACILITY NAME: CGS**

I. PERMIT NUMBER: 21006-259

II. EQUIPMENT DESCRIPTION

1. General process description: aqueous ammonia storage tank
2. Equipment type: above ground storage tank
3. Equipment description: 20,000 gal tank
4. Equipment make, model & serial number: n/a
5. Maximum design process rate or throughput:
6. Control device(s) type and description (if any): pressure relief valve (PRV) at 25-30 psig

III. OPERATIONAL INFORMATION

1. Operating schedule: 24 (hours/day) 8760 (hours/year)
2. Exhaust gas flow rate: SCFM @ %H_2O
3. Raw products used and finished products produced:

RAW PRODUCT USED (name)	**CONSUMPTION** (lbs/hr, gal/hr, etc.)	**PRODUCTS PRODUCED** (name)	**PRODUCTION** (lbs/hr, gal/hr, etc.)
Aqueous ammonia	~109,893.5 lbs (2010)	n/a	n/a

GENERAL EMISSION UNIT
(FORM 3.17-F2)

DISTRICT: Colusa County	**< DISTRICT USE ONLY =**
	DISTRICT ID:
COMPANY NAME: PG&E	**FACILITY NAME: CGS**

4. Unit emissions: (tank working losses only, SCAQMD method)

CRITERIA POLLUTANT EMISSIONS (tons per year)					
POLLUTANTS	NH3				
A. Emissions	<0.01	n/a	n/a	n/a	n/a
B. Pre-modification Emissions[1]	n/a				
C. Emission Change[2]	n/a				
D. Emission Limit[3]	n/a				
OTHER REGULATED AIR POLLUTANT EMISSIONS (tons per year)					
POLLUTANTS					
A. Emissions	n/a	n/a	n/a	n/a	n/a
B. Pre-modification Emissions[1]					
C. Emission Change[2]					
D. Emission Limit[3]					

[1] *For permit modifications only; emissions prior to project modification.*
[2] *Difference between Pre-Modification Emissions (Section B.) and Emissions (Section A.).*
[3] *For voluntary emissions cap and emission limits [i.e. expressed as parts per million (ppm) corrected for dilution air, pounds per hour (lbs/hr), pounds per million BTU (lb/MMBTU, etc.] required by any applicable federal requirement.*

Working loss Lw = 0.001 x Mv x Pva x Kn x Kp x Q
Mv = molecular weight (17)
Pva=vapor pressure at 70 F (4.28)
Kn=working loss turnover factor (1)
Kp=workingloss product factor (1)
Q=volume of liquid pumped to tank, Bbls/yr

***** See tank schematic on next page. *****

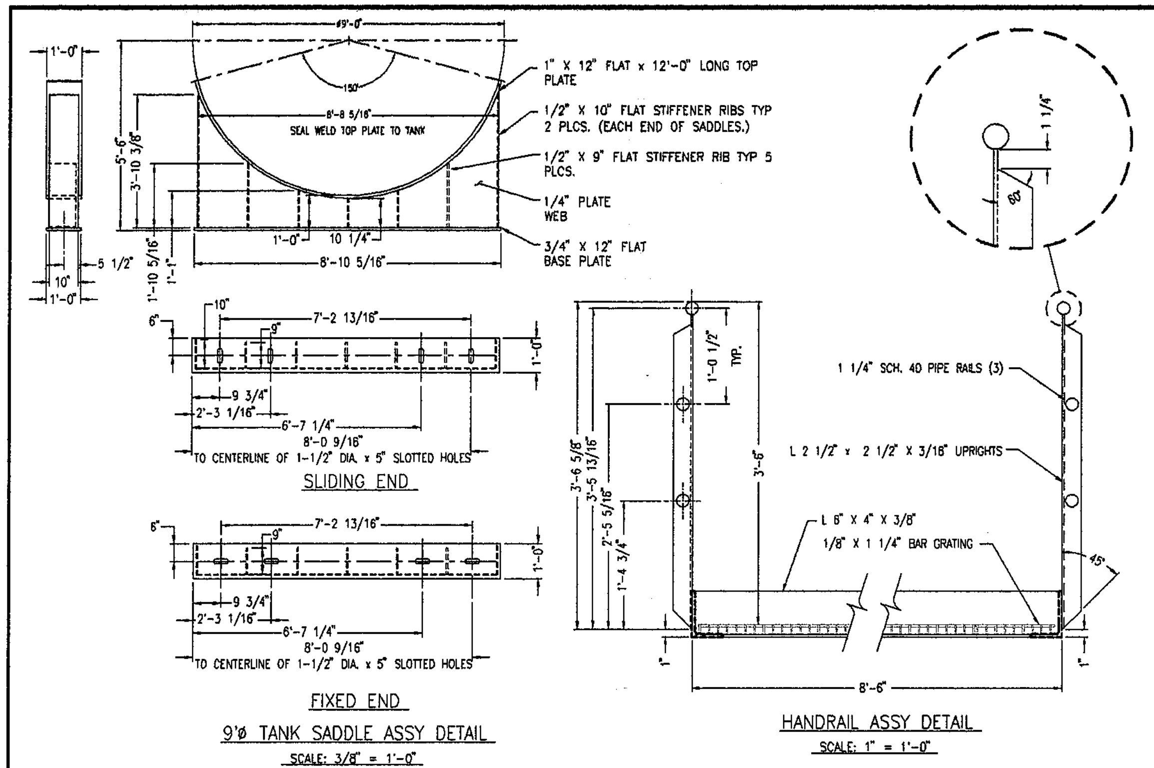

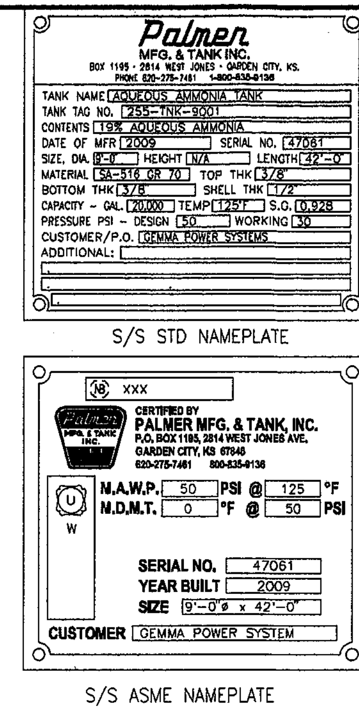

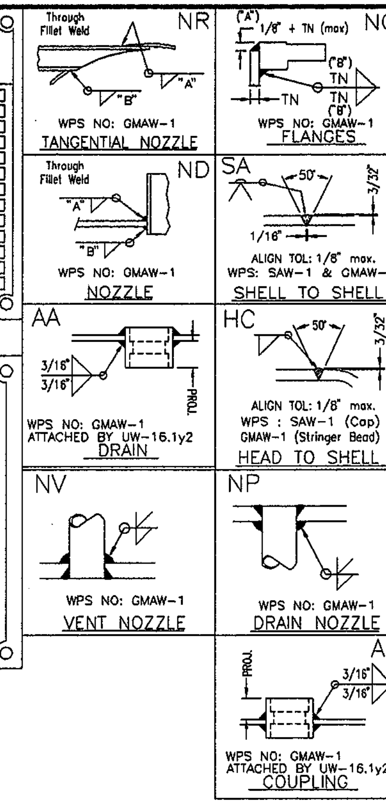

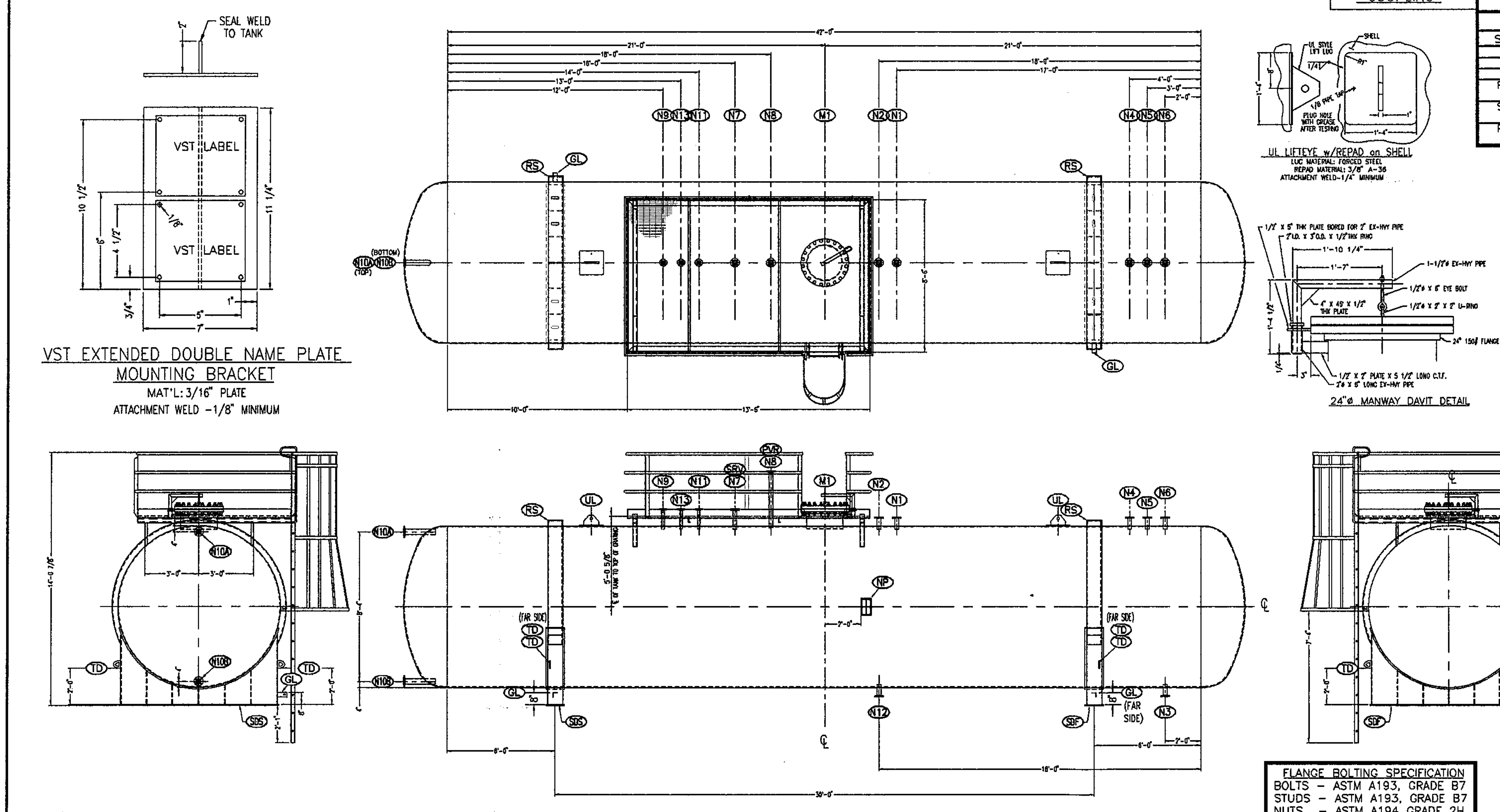

BILL OF MATERIALS

ASME U2 FORM REQ'D	MTR'S REQ'D	SYM.	QTY.	DESCRIPTION	MODEL NUMBER	WELD DETAIL	MATERIAL
	YES		2	HEADS: 9'-0" O.D. x 3/8" NOM. (.2686 MIN.), ELLIPSOIDAL 2:1		HC	SA-516 GR 70
	YES		1	SHELL: 9'-0" O.D. X 42'-0" X 1/2 " NOM. (0.2690 MIN.)		SA	SA-516 GR 70
		LE	4	PHOENIX FORGE MEDIUM LIFT EYE			SA-105
		UL	2	UL STYLE LIFT EYE W/REPAD			SA-105
		GL	2	SPECIAL GROUND LUG - 3" X 3" X 6" ANGLE W/(2) 1/2" HOLES SPACED 1" O.C.			304 SS
		NP	1	DOUBLE NAMEPLATE BRACKET			SA-36
		NP	1	ASME NAMEPLATE			S/S
		NP	1	VST NAMEPLATE			S/S
		RS	2	RING STIFFENER - MC 10 X 28.5 X 19'-6 5/16" ROLLED LEG IN TO 9'-0" ID			SA-36
		SDS	1	SADDLE ASSEMBLY - SLIDING END (SEE DETAIL THIS PAGE)			SA-36
		SDF	1	SADDLE ASSEMBLY - FIXED END (SEE DETAIL THIS PAGE)			SA-36

SCHEDULE OF FITTINGS

ASME U2 FORM REQ'D	MTR'S REQ'D	SYM.	QTY.	DESCRIPTION	SERVICE	PROJECTION EXT.	PROJECTION INT.	WELD SIZE A	WELD SIZE B	WELD DETAIL	MATERIAL
	YES	N1	1	2" 150# RFSO FLANGE	FILL	6"	A/R	-	-	NG	SA-105
			7-5/8"	2" SCH. 160 SMLS PIPE				5/16"	3/8"	ND	SA-106 GR B
	YES	N2	1	2" 150# RFSO FLANGE	VAPOR RETURN	6"	A/R	-	-	NG	SA-105
			7-5/8"	2" SCH. 160 SMLS PIPE				5/16"	3/8"	ND	SA-106 GR B
	YES	N3	1	2" 150# RFSO FLANGE	PUMP SUCTION	6"	A/R	-	-	NG	SA-105
			7-5/8"	2" SCH. 160 SMLS PIPE				5/16"	3/8"	ND	SA-106 GR B
	YES	N4	1	2" 150# RFSO FLANGE	FROM PSV	6"	A/R	-	-	NG	SA-105
			7-5/8"	2" SCH. 160 SMLS PIPE				5/16"	3/8"	ND	SA-106 GR B
	YES	N5	1	2" 150# RFSO FLANGE	FROM PSV	6"	A/R	-	-	NG	SA-105
			7-5/8"	2" SCH. 160 SMLS PIPE				5/16"	3/8"	ND	SA-106 GR B
	YES	N6	1	2" 150# RFSO FLANGE	PUMP RECIRC	6"	A/R	-	-	NG	SA-105
			7-5/8"	2" SCH.160 SMLS PIPE				3/16"	1/4"	ND	SA-106 GR B
	YES	N7	1	2" 150# RFSO FLANGE	RELIEF VALVE	11-3/8"	A/R	-	-	NG	SA-105
			1'1"	2" SCH.160 SMLS PIPE				3/16"	3/16"	ND	SA-106 GR B
	YES	N8	1	2" 150# RFSO FLANGE	BREATHER	3'-0"	A/R	-	-	NG	SA-105
			3'-0"	2" SCH.160 SMLS PIPE				5/16"	3/8"	ND	SA-106 GR B
	YES	N9	1	1-1/2" 150# RFSO FLANGE	PRESSURE TRANS.	11-3/8"	A/R	-	-	NG	SA-105
			1'-1"	1-1/2" SCH.160 SMLS PIPE				1/4"	3/8"	ND	SA-106 GR B
	YES	N10A	1	3" 150# RFSO FLANGE	LEVEL GAUGE	1'-3 1/2"	A/R	-	-	NG	SA-105
			1'-9"	3" SCH. 80 SMLS PIPE				1/4"	3/8"	NR	SA-106 GR B
	YES	N10B	1	3" 150# RFSO FLANGE	LEVEL GAUGE	1'-3 1/2"	A/R	-	-	NG	SA-105
			1'-9"	3" SCH. 80 SMLS PIPE				1/4"	3/8"	NR	SA-106 GR B
	YES	N11	1	1-1/2" 150# RFSO FLANGE	TEMP INDICATOR	11-3/8"	A/R	-	-	NG	SA-105
			1-1"	1-1/2" SCH.160 SMLS PIPE				1/4"	3/8"	ND	SA-106 GR B
	YES	N12	1	2" 150# RFSO FLANGE	DRAIN	6"	A/R	-	-	NG	SA-105
			7-5/8"	2" SCH.160 SMLS PIPE				5/16"	N/A	NP	SA-106 GR B
	YES	N13	1	1-1/2" 150# RFSO FLANGE	PRESSURE IND.	11-3/8"	A/R	-	-	NG	SA-105
			1'-1"	1-1/2" SCH.160 SMLS PIPE				1/4"	3/8"	ND	SA-106 GR B
	YES	M1	1	DAVIT	MANWAY	9"	A/R	N/A	N/A	N/A	CS
			1	24" 150# RFSO FLANGE				-	-	NG	SA-105
			1	24" 150# RF BLIND W/ HANDLES, BOLTS, NUTS AND WASHERS				N/A	N/A	N/A	SA-105
			13"	24" SCH.10 SMLS PIPE				3/16"	5/16"	ND	SA-106 GR B

ITEMS TO SHIP LOOSE

SYM.	QTY.	DESCRIPTION	
LD	1	CARBON STEEL LADDER - HOT DIP GALVANIZED	CS
PF	1	CARBON STEEL PLATFORM - 8'-6" X 13'-6" - HOT DIP GALVANIZED	CS
	1	PENBERTHY LEVEL GAUGE WITH ISOLATION VALVES AND DRAINS	
PVR	1	PRESSURE VACUUM RELIEF VENT. (PRESSURE SET TO AND VACUUM SET TO -0.75 OZ/in2.	316 SS W/TEFLON DIAPHRAGMS
SRV	1	SAFETY RELIEF VALVE -	
PVR	1	PROTECTOSEAL MODEL# F8542H END OF LINE PRESSURE VAC RELIEF VENT. (PRESSURE SET TO +0.75 OZ/in2 AND VACUUM SET TO -0.75 OZ/in2.	316 SS W/TEFLON DIAPHRAGMS

NOTES:

1. FLANGES INSTALLED IN SHELL WILL BE INSTALLED WITH BOLT HOLES STRADDLING THE TANKS VERTICAL OR HORIZONTAL CENTERLINES. FLANGES INSTALLED IN THE HEADS WILL BE INSTALLED WITH BOLT HOLES STRADDLING THE 0°-180° & 90°-270° CENTERLINES.
2. THE WETTED SURFACE AND GASKET FACE ON FLANGES WILL BE TREATED THE SAME AS THE TANK INTERIOR IN RESPECT TO SANDBLASTING, AND OR PAINTING.
3. ALL DIMENSIONS SHOWN AS NOMINAL (NOM) ARE ±1-1/2%.
4. HYDROTEST TANK TO 65 PSI. (1.3 X DESIGN PRESSURE)
5. PROVIDE 2 SETS OF PERMANENT GASKETS FOR THE MANWAY AND THE BLIND FLANGES. MANWAYS SHALL BE FITTED WITH TEMPORARY GASKETS FOR USE DURING SHIPPING. PERMANENT GASKETS SHALL BE FURNISHED IN WOODEN BOXES IDENTIFIED BY TANK NAME AND TANK TAG NUMBER.
6. TANK SHALL BE DESIGNED SO THAT OPENINGS IN THE SHELL AND SHELL REINFORCEMENTS DO NOT INTERSECT LONGITUDINAL OR CIRCUMFERENTIAL JOINTS.
7. MACHINED FLANGE SURFACES SHALL BE PROTECTED AGAINST CORROSION DURING SHIPMENT, STORAGE, AND INSTALLATION WITH THE APPLICATION OF ONE COAT OF WATER SOLUBLE, RUST-INHIBITING COATING.

COATINGS:

INTERIOR:
INTERIOR COATING SHALL BE A WATER SOLUBLE RUST INHIBITOR WITH SURFACE TREATMENT PER MANUFACTURERS REQUIREMENTS.

EXTERIOR:

SURFACE PREP:
ALL EXTERIOR STEEL SHALL BE BLAST CLEANED PER SSPC-SP6/NACE 3

EXT. COATING:
1 COAT SHERWIN WILLIAMS ZINC CLAD IV AT 3.0 - 5.0 MILS. D.F.T.

1 COAT SHERWIN WILLIAMS ACROLON 218 HS 3.0 TO 6.0 MILS. D.F.T.

LADDER & PLATFORM:
HOT DIPPED GALVANIZED.

CONSTRUCTION NOTES:

1. BUILD IN STRICT ACCORDANCE WITH THE 2007 MANDATORY SECTION OF THE ASME BOILER & PRESSURE VESSEL CODE: SECTION VIII DIV. 1 CURRENT ADDENDA VESSEL TO BE MARKED WITH ASME "U" STAMP.
2. INSPECTION BY "ONE BEACON AMERICAN INSURANCE CO."
3. ALL NOZZLES TO HAVE FULL PENETRATION WELDS.
4. NO IMPACT TESTING REQUIRED PER UG-20(F) 1-5.
5. ALL WELDS TO BE MARKED WITH WELDER I.D.

SEISMIC DATA

IBC-2006:
SITE CLASS: C
OCCUPANCY: III
Ss: 0.857g
S1: 0.331g
SEISMIC DESIGN CAT.: D
IMPORTANCE FACTOR: 1.25

FLANGE BOLTING SPECIFICATION

BOLTS - ASTM A193, GRADE B7
STUDS - ASTM A193, GRADE B7
NUTS - ASTM A194 GRADE 2H

DESIGN CONDITIONS

DESIGN PRESSURE: 50 PSIG	EMPTY WEIGHT: 31,000 LBS
DESIGN TEMP.: 125°F	CAPACITY: 20,000 GAL.
OPERATING PRESSURE: 30 PSI	RADIOGRAPHIC TEST: NONE
OPERATING TEMP.: 32° TO 100°F	CORROSION ALLOW: .0625
EXTERNAL PRESS.: ATMOS	HEAT TREATMENT: NONE
M.D.M.T: 0° AT 50 PSI SPECIFIC GRAVITY: 0.92 @ 60°F	GASKET MAT'L.: 1/16" COMPRESSED FIBER NON ASBESTOS
WIND: 90 MPH	SEISMIC: SEE SEISMIC NOTE THIS PAGE
CONTENTS: 19% AQUEOUS AMMONIA	MFG. SPEC.: ASME SECTION VIII, DIV 1
SCALE: 1/4" = 1'-0" DATE: 11/24/08	CHKD.BY: NICK B. DWN.BY: L. HULL

SYM.	DRAWING REVISIONS	CHKD. BY	DATE	DWN. BY
3	CHANGED IMPORTANCE FACTOR TO 1.25 ON SEISMIC NOTE ADDED 2'-1" DIMENSION TO LADDER CHANGED PLATFORM WIDTH TO 8'-6" IN B.O.M. TO MATCH DRAWING ADDED FLANGE TO NOZZLE N8	NB	5-6-09	L. HULL
2	ADDED PENBERTHY LEVEL GAUGE	NB	4-15-09	L. HULL
1	REVISED PER CUSTOMER MARK-UP OF 1-19-09	NB	2-2-09	L. HULL

Palmer MFG. & TANK, INC. GARDEN CITY, KANSAS.

TANK NAME	SERIAL NUMBER	TANK ID NUMBER
AQUEOUS AMMONIA TANK	47061	255-TNK-9001

GEMMA POWER SYSTEMS CALIFORNIA, INC.
PG&E - COLUSA GENERATING STATION
5025 DELOVAN ROAD
MAXWELL, CALIFORNIA 95955

9'-0" O.D. X 42'-0" | DRAWING NUMBER: 28430-6 | REV. 3

7/20/2009 9:35:42 AM

EMISSION CONTROL UNIT
(FORM 3.17-G1)

DISTRICT: Colusa County	**< DISTRICT USE ONLY =**
	DISTRICT ID:
COMPANY NAME: PG&E	**FACILITY NAME: CGS**

I. PERMIT NUMBER: 21006-259

II. EQUIPMENT DESCRIPTION (Each Turbine/HRSG has an SCR system as described below)

1. General process description: SCR NOx Control system (on each turbine/HRSG)
2. Equipment type: SCR
3. Equipment description: Aqueous ammonia based SCR NOx control system
4. Equipment make, model & serial number:
5. Emission unit(s) served by this equipment: Dedicated SCR system on each turbine/HRSG
6. Maximum design or rated capacity:

III. EQUIPMENT DESIGN INFORMATION (see SCR system spec sheet, next page)

1. Exhaust gas: Temperature: (F) Flow Rate: 3,911,460 lbs/hr
   Moisture: (%) Oxygen: (%)
   CO_2: (%)
2. General: Manufacturer: Nooter-Erickson Pressure Drop: (in-Hg)
   Inlet Temp.: (F) Outlet Temp.: (F)
3. Catalyst data: Catalyst Type/Material:
   Catalyst Life: (years) Volume: (Ft3)
   Space Velocity: (Ft3/Ft) NH3 inj. Rate: 90-250 (lbs/hr)
   NH3 Inj. Temp.: (F)
4. Baghouse data: Design: [ ] Positive Pressure [ ] Negative Pressure
   Cleaning Method:
   Fabric Material:
   Flow Rate: (SCFM) Air/Cloth Ratio:
5. ESP data: Number of fields: Cleaning Method:
   Power Input:
6. Scrubber data: Type/design: Sorbent Type:
7. Other Control Devices (include appropriate design information):

EMISSION CONTROL UNIT
(FORM 3.17-G2)

DISTRICT: Colusa County	**< DISTRICT USE ONLY =**
	DISTRICT ID:
COMPANY NAME: PG&E	**FACILITY NAME: CGS**

IV. OPERATIONAL INFORMATION

1. Operating schedule: 24 (hours/day) 8760 (hours/year)
2. Raw products used by control device: aqueous ammonia
3. Operating information:

POLLUTANTS AND EMISSION CONTROL INFORMATION			
POLLUTANT (name)	**INLET CONCENTRATION** (ppm or gr/DSCF[1])	**OUTLET CONCENTRATION** (ppm or gr/DSCF[1])	**CONTROL EFFICIENCY** (% weight)
NOx	<20 ppmvd @ 15% O2	<= 2.0 ppmvd @ 15% O2	90+%
NH3	n/a	<= 5.0 ppmvd @ 15% O2	n/a

[1] Specify percent O_2 or percent CO_2.

DESIGN BASIS

A. Performance:	
Combustion Turbine Type	GE 7FA
Outlet NOx	10.25 ppmvd @ 15% O_2
Max. Exhaust Flow	3,911,460 lb/hr
Stack NOx (Natural Gas)	2.0 ppmvd @ 15% O_2
Stack NH3	5.0 ppmvd @ 15% O_2
Ammonia Consumption (19% by weight)	
Design Flow (Initial catalyst – MIN)	90 lb/hr
Design Flow (Initial catalyst – MAX)	250 lb/hr
Skid design (includes 20% margin)	300 lb/hr
Dilution Air	5,467 ACFM @ 32" w.c. SP
B. Site Conditions:	
Location	Maxwell, CA
Elevation	180 ft
Ambient Temperature Range	18 – 114°F
Design Criteria	
Building Code	IBC 2006
Electrical Classification	Non-hazardous (NEMA 4X)
Utilities Available	
Control	120 VDC
Motor Power	460 Volt, 3 Phase, 60 Hz
Aqueous Ammonia	40 psig (minimum)
Instrument Air	60-150 psig (@ 20-100°F)

SYSTEM DESCRIPTION

II. AMMONIA SUPPLY

Technical grade ammonia (99.5% or higher in purity with a impurity content of 0.2%) mixed with de-ionized water to a concentration of approximately 19% by weight is required for this system. Ammonia storage equipment is furnished by others.

III. EQUIPMENT

The SCR system is composed of the following items:

A. Each turbine has a dedicated ammonia flow control unit (AFCU). Aqueous ammonia is supplied to the AFCU skid at 40 PSIG and ambient temperature. Two fans, a primary and secondary, are used to direct the gas through the skid and distribution piping. They are designed to provide 5,467 ACFM each with a static gauge pressure of 32" w.c. SP.

B. The process gas, a combination of exhaust gas and vaporized ammonia, is distributed from the AFCU skid through the interconnecting piping to the manifold and AIG assemblies. The gas is then injected upstream of the internal structure frame containing the catalyst modules (provided by others).

IV. CONTROL

Wiring for instrumentation is terminated in a junction box (1-201-JBX-X702) located on the AFCU skid. Control of the SCR system is achieved through a DCS system (supplied by others).

Typical SCR Specifications for GE7FA Applications

Catalyst Property	Specifications*
Mfg.	Nooter-Erickson
Type	Titanium/vanadium/tungsten w-homogeneous honeycomb structure
Dimensions	25 ft high, 70 ft wide
Volume	2050 ft^3
Life	5 years
Space Velocity	23000 hr^{-1}
NH3 injection rate	90-250 lbs/hr
NOx removal eff%	>90%
NOx outlet	2 ppmvd
Ammonia slip	<= 5 ppmvd
Max Op temp	750 F
Min Op temp	450 F
*these specifications will be differ slightly based upon site location, equipment design, and operating parameters.	

EMISSION CONTROL UNIT
(FORM 3.17-G1)

DISTRICT: Colusa County	**< DISTRICT USE ONLY =**
	DISTRICT ID:
COMPANY NAME: PG&E	**FACILITY NAME: CGS**

I. PERMIT NUMBER: 21006-259

II. EQUIPMENT DESCRIPTION (Each Turbine/HRSG has an CO catalyst system as described below)

1. General process description: CO Oxidation Catalyst Control system (on each turbine/HRSG)
2. Equipment type: CO Catalyst
3. Equipment description: Oxidation catalyst
4. Equipment make, model & serial number: BASF
5. Emission unit(s) served by this equipment: Dedicated CO Oxidation catalyst on each turbine/HRSG
6. Maximum design or rated capacity:

III. EQUIPMENT DESIGN INFORMATION (see CO catalyst spec sheet, next page)

1. Exhaust gas: Max InletTemperature: 1050 (F) Flow Rate: (SCFM)
   Moisture: (%) Oxygen: (%)
   CO_2: (%)
2. General: Manufacturer: BASF Pressure Drop: (in-Hg)
   Inlet Temp.: 1050 (F) Outlet Temp.: (F)
3. Catalyst data: Catalyst Type/Material: Platinum/alumina on stainless steel substrate
   Catalyst Life: 5-7 (years) Volume: (Ft3)
   Space Velocity: (Ft3/Ft) NH3 inj. Rate: (gal/hr)
   NH3 Inj. Temp.: n/a (F)
4. Baghouse data: Design: [ ] Positive Pressure [ ] Negative Pressure
   Cleaning Method:
   Fabric Material:
   Flow Rate: (SCFM) Air/Cloth Ratio:
5. ESP data: Number of fields: Cleaning Method:
   Power Input:
6. Scrubber data: Type/design: Sorbent Type:
7. Other Control Devices (include appropriate design information):

EMISSION CONTROL UNIT
(FORM 3.17-G2)

DISTRICT: Colusa County	**< DISTRICT USE ONLY =**
	DISTRICT ID:
COMPANY NAME: PG&E	**FACILITY NAME: CGS**

IV. OPERATIONAL INFORMATION

1. Operating schedule: 24 (hours/day) 8760 (hours/year)
2. Raw products used by control device: n/a
3. Operating information:

POLLUTANTS AND EMISSION CONTROL INFORMATION

POLLUTANT (name)	**INLET CONCENTRATION** (ppm or gr/DSCF[1])	**OUTLET CONCENTRATION** (ppm or gr/DSCF[1])	**CONTROL EFFICIENCY** (% weight)
CO	<30 ppmvd @ 15% O2	<= 3.0 ppmvd @ 15% O2	~90+%
VOC (and VOC HAPs)	n/a	<= 2.0 ppmvd @ 15% O2, with duct firing	~80+%
VOC (and VOC HAPs)	n/a	<= 1.38 ppmvd @ 15% O2, without duct firing	~80+%

[1] Specify percent O_2 or percent CO_2.

Typical CO Catalyst Specifications for GE7FA Applications

Catalyst Property	Specifications*
Mfg.	BASF
Type	Alumina-platinum on stainless steel substrate
Dimensions	25 ft high, 70 ft wide
Volume	~300 ft^3
Life	5 years
Space Velocity	218000 hr^{-1}
Area Velocity	82000 ft/hr
CO removal eff%	>70%
CO outlet	2 ppmvd
VOC removal eff%	<= 50%
VOC outlet	2 ppmvd
Max Op temp	1050 F
Min Op temp	300 F
*these specifications will differ slightly based upon site location, equipment design, and operating parameters.	

BASF

The Chemical Company

Catalyst Handling, Maintenance and Spare Parts List

PROCEDURES FOR

BASF Catalyst

CARBON MONOXIDE CONVERTER SYSTEM

Nooter Erkisen

Nooter Eriksen Job No 081223

Colusa Project

BASF Job # CR1333

REV.0

ISSUED 10/13/2008

Table A - Performance Data

CASE	1	2	3	4	5	6	7
	A - Guar	B - Guar	C	D	E	F	G
	2 x 100%	2 x 100%	2 x 100%	2 x 100%	2 X 100%	2 x 100%	2 x75%
DUCT BURNER - FIRED / UNFIRED	UNFIRED	FIRED	FIRED	UNFIRED	UNFIRED	FIRED	UNFIRED
GIVEN BURNER HEAT ADDED, MMBtuh - LHV	0.00	565.00	563.73	0.00	0.00	577.33	0.00
GIVEN GAS FLOW AFTER BURNER, lb/hr	3,604,001	3,521,567	3,631,088	3,877,000	3,384,000	3,903,348	2,904,000
GAS ANALYSIS - AFTER BURNER, % VOL. - N_2	74.47	72.60	73.56	74.99	73.00	74.02	74.32
O_2	12.15	9.16	9.53	12.74	12.23	9.98	12.14
CO_2	3.94	5.27	5.15	3.77	3.75	5.05	3.99
H_2O	8.55	12.10	10.88	7.60	10.15	10.06	8.66
Ar	0.89	0.87	0.88	0.90	0.87	0.89	0.89
CALC. GAS MOL. WT.	28.38	28.12	28.24	28.48	28.19	28.32	28.38
GIVEN CO AFTER BURNER, lb/hr	37.7	68.5	68.2	38.2	33.5	69.7	30.3
CALC. CO AFTER BURNER, ppmvd @ 15% O_2	9.0	12.5	12.3	9.0	9.0	12.1	9.0
GIVEN VOC AFTER BURNER, lb/hr	4.8	17.5	17.0	4.9	4.3	17.0	3.9
CALC. VOC** AFTER BURNER, ppmvd @ 15% O_2	2.0	5.6	5.3	2.0	2.0	5.1	2.0
GIVEN GAS TEMP. @ CO CATALYST, °F (+/-25)	575	669	669	574	571	670	564
DESIGN REQ. CO OUT, ppmvd @ 15% O_2	3.0	3.0	3.0	3.0	3.0	3.0	3.0
VOC OUT, ppmvd @ 15% O_2	2.0	2.0	2.0	2.0	2.0	2.0	2.0
GUARANTEED PERFORMANCE DATA							
CO CONVERSION, % - Min.	66.6%	76.0%	75.6%	66.6%	66.6%	75.2%	66.6%
CO OUT, lb/hr - Max.	12.6	16.4	16.7	12.7	11.2	17.3	10.1
CO OUT, ppmvd @ 15% O_2	3.0	3.0	3.0	3.0	3.0	3.0	3.0
VOC** OUT, lb/hr	3.8	6.4	6.3	3.9	3.4	6.6	3.1
VOC** OUT, ppmvd @ 15% O_2	1.6	2.0	2.0	1.6	1.6	2.0	1.6
** VOC - NON-METHANE / NON-ETHANE - 50% SATURATED							
CO PRESSURE DROP, "WG - Max.	0.7	0.8	0.8	0.8	0.7	0.9	0.6
EXPECTED PERFORMANCE DATA							
SO_2 -> SO_3 CONVERSION, % - Max.	2%	10%	10%	2%	2%	9%	2%
NO -> NO_2 CONVERSION, % - Max.	Max. 30%	Max. 30%	Max. 30%	Max. 30%	Max. 30%	Max. 30%	Max. 30%

Table A - Performance Data

CASE	8	9	10	11	12	13
	H	I	J	K	L	0
	2 X 75%	2x 50%	2x50%	1 X 50%	1 X 50%	2 X 100%
DUCT BURNER - FIRED / UNFIRED	UNFIRED	UNFIRED	UNFIRED	UNFIRED	UNFIRED	UNFIRED
GIVEN BURNER HEAT ADDED, MMBtuh - LHV	0.00	0.00	0.00	0.00	0.00	0.00
GIVEN GAS FLOW AFTER BURNER, lb/hr	2,870,001	2,403,000	2,392,000	2,403,000	2,392,000	3,435,951
GAS ANALYSIS - AFTER BURNER, % VOL. - N_2	73.60	74.31	74.40	74.59	73.60	72.03
O_2	12.09	12.09	13.09	12.94	12.09	9.13
CO_2	3.92	4.01	3.50	3.61	3.92	5.21
H_2O	9.51	8.70	8.11	7.97	9.51	12.76
Ar	0.88	0.89	0.90	0.89	0.88	0.87
CALC. GAS MOL. WT.	28.28	28.38	28.40	28.42	28.28	28.04
GIVEN CO AFTER BURNER, lb/hr	29.5	25.3	22.0	22.7	24.6	65.6
CALC. CO AFTER BURNER, ppmvd @ 15% O_2	9.0	9.0	9.0	9.0	9.0	12.4
GIVEN VOC AFTER BURNER, lb/hr	3.8	3.2	2.8	2.9	3.1	16.5
CALC. VOC** AFTER BURNER, ppmvd @ 15% O_2	2.0	2.0	2.0	2.0	2.0	5.4
GIVEN GAS TEMP. @ CO CATALYST, °F (+/-25)	564	559	559	558	558	668
DESIGN REQ. CO OUT, ppmvd @ 15% O_2	3.0	3.0	3.0	3.0	3.0	3.0
VOC OUT, ppmvd @ 15% O_2	2.0	2.0	2.0	2.0	2.0	2.0
GUARANTEED PERFORMANCE DATA						
CO CONVERSION, % - Min.	66.6%	66.6%	66.6%	66.6%	66.6%	75.8%
CO OUT, lb/hr - Max.	9.9	8.4	7.3	7.6	8.2	15.9
CO OUT, ppmvd @ 15% O_2	3.0	3.0	3.0	3.0	3.0	3.0
VOC** OUT, lb/hr	3.0	2.5	2.2	2.3	2.5	6.0
VOC** OUT, ppmvd @ 15% O_2	1.6	1.6	1.6	1.6	1.6	2.0
** VOC - NON-METHANE / NON-ETHANE - 50% SATURATED						
CO PRESSURE DROP, "WG - Max.	0.5	0.4	0.4	0.4	0.4	0.8

I. SYSTEM DESCRIPTIONS

A. Process Description

The gas turbine exhaust passes through the carbon monoxide catalytic oxidation system where the carbon monoxide is oxidized. The oxidation reaction between oxygen and carbon monoxide, which is enhanced by the catalyst, occurs at 500°F and above to form carbon dioxide.

B. Equipment Description

The CO converter unit assembly is shown on the CR1333-101 Drawing. The special stainless steel foil is pattern corrugated and folded back and forth upon itself to make a honeycomb core. The core is encased in a stainless steel enclosure measuring approximately 4 square feet. This core and enclosure is called a "module."

These modules are fitted into an internal support frame(s) made of carbon steel. Expansion seals on the outside of the internal support frame assure that the exhaust passes through the catalyst. The expansion seals also accommodate thermal expansion. The above-mentioned components are installed in an external support structure (by others) which serves as a duct spool piece.

This catalyst structure is constructed of carbon steel with a stainless steel liner over the insulation, and has a man way on one sidewall. The man way is for installation and removal of catalyst modules.

The converter duct spool is also equipped with a series of gas ports for access to measure total and static pressures for developing a velocity profile. These ports can also be used to take samples from front and back of the converter, or to mount any customer supplied instruments.

Test catalyst cores or "buttons" (cylinders about 3 inches diameter) are located in various catalyst modules. The test catalyst buttons are mounted for easy replacement from time to time for lab testing.

The largest and heaviest component, during the CO module installation, that requires manual lifting is the modules, which are approximately 25.56" wide x 22.75" tall x 2.45" deep, and weigh approx. 30 lbs

C. Safety Considerations

Normal safety precautions for working near large fired boilers and associated equipment should be followed according to good operating practice and the manufacturer's instructions.

Care must be taken to avoid hot gases that may escape while access gas ports are uncapped.

II. OPERATING AND MAINTENANCE

The principal of operation for the CO catalytic converter is a chemical reaction dependent only on temperature and requires no control instruments

The catalyst must be operated in accordance with the following conditions and limitations; failure to operate the catalyst only in accordance with these conditions and limitations voids the warranty. Refer to BASF proposal for complete warranty.

1. The catalyst is only exposed to the stated exhaust flow conditions which are free of contaminants and particulates outside those listed in the performance data in the contract

2. The catalyst will be operated in accordance with the conditions as specified by the BUYER in the performance data in the contract.

3. The maximum temperature shall not be permitted to exceed the following;

   1050°F (566°C)*

   *This temperature limit is specified without consideration to critical operating temperatures that exist as a result of structural steel characteristics.

4. For purposes of illustration, and not by way of limitation, SELLER calls to BUYER'S attention the following examples of specifications that must be met.

   (a) The following contaminants are known catalyst deactivators and contribute to shortened catalyst life: heavy and base metals such as lead, mercury, arsenic, antimony, sodium, potassium, lithium, zinc, copper, tin, iron, nickel and chrome; sulfur; silicon, phosphorous and fluorine, chlorine, iodine and ash. Hence, the contents of these contaminants in the catalyst must not singularly or collectively accumulate to such a level that exceeds 350mg/m^3 or 10-mg/ ft^3 of catalyst as determined by ICP-OES (Inductively Coupled Plasma - Optical Emissions Spectroscopy).

5. No alternative fuels are to be used other than those specified in the performance contract.

6. Thermal shocking should be avoided requiring a gradual heat-up and cool-down cycle.

7. Due to the simplicity of design the only maintenance required would be a periodic inspection of the upstream face of the catalyst. Check for debris that would cause obstructions to gas flow or which would resist thermal expansions.

8. Should other specific maintenance be required, it would be recommended by BASF Corp. through the test button program. Attached are two typical maintenance procedures, air and water washing, that could be recommended by BASF Corp.

III. Catalyst Storage

Catalyst Modules should be braced and sealed in a wooden crate. Bracing should be secure enough to prevent any loads from resting on the surface of the catalyst foil or excessive loads on the lifting and mounting lugs. A water vapor absorbent can be obtained from BASF Co. which can be stored in a crate to assure a dry environment.

Storage of the catalyst for any length of time should take place where it is **clean** and **dry**. BASF recommends storing the catalyst indoors in an area of low traffic to avoid accidental damage. Crates or platforms holding modules should always be elevated at least 4 inches from the floor to avoid puddles and allow air circulation.

If indoor storage is not accessible, then the crates should be braced and stored where it is elevated at least 6 inches off the ground and tarped for water run-off. Proper pitch bracing should be provided under the tarp to keep water from pooling. Ambient temperatures are not a concern. BASF does not recommend the outdoor storage of the catalyst for longer than one week.

IV. Turbine Shakedown

We also recommend that the "Turbine Shakedown" be completed prior to the catalyst installation in the ductwork. That is, the turbine is operated to a point where all debris and loose insulation material has been blown through the ductwork and that the turbine operation has been shown to be reliable. We are particularly concerned about any oil or fluid leaking, which could deposit on the catalyst and cause deactivation.

V. Recommended Spare Parts

There are no recommended spare parts required for the CO catalyst. The test button retains for each individual project are stored and maintained by BASF for future catalyst performance testing.

VI. MSDS

The MSDS is attached.

BASF
The Chemical Company

Material Safety Data Sheet

MSDS Code: CAM-1005

CAMET™ CO CATALYST

Revision date:	10/24/06	Date Printed:	10/24/06

NFPA Classification:		HMIS Classification:	
Health:	1	Health:	1
Flammability:	0	Flammability:	0
Instability:	0	Physical Hazard:	0
Special Hazards:		Personal Protection:	B

1. CHEMICAL PRODUCT AND COMPANY IDENTIFICATION

Chemical Name: Chemical Mixture

Product Use: Environmental catalyst.

Supplier:
BASF - The Chemical Company
101 WOOD AVENUE
ISELIN, NJ 08830-0770
1-732-205-6829

For Chemical Emergency Call CHEMTREC (24 hours):
1-800-424-9300 (US, Canada, Puerto Rico, Virgin Islands)
1-703-527-3887 (Outside Above Area)

2. COMPOSITION / INFORMATION ON INGREDIENTS

Ingredient CAS Number	Weight In Percent (%)	Notes
Stainless Steel Substrate	78-80	None.
Alumina 1344-28-1	20-22	None.
Platinum Group Metals	< 2	None.

Other Information:
NOTE: The percentage by weight values reported for this product represent approximate formulation values.

3. HAZARDS IDENTIFICATION

Emergency Overview:
Color: Light gray to dark gray

Form:	Solid
Odor:	Odorless
Flash Point, °C:	Not Determined

Most Important Hazards: Exposure to dust or fume may cause irritation of the respiratory tract. Exposure to dust or fume may cause irritation of eyes and skin.

Potential Health Effects:

Inhalation:	May cause irritation of the respiratory tract.
Ingestion:	No adverse health effects are expected from swallowing.
Skin Contact:	May cause skin irritation. May cause dermatitis.
Eye Contact:	Large amounts of dust may cause mechanical irritation.
Other Effects:	NOTE: The metal substrate contained in this product is an alloy which may contain nickel, chromium and manganese. This material is a solid and presents no health hazards as sold. However, if the material is welded, burned, ground, cut or machined, hazardous fumes or dust could be generated. May cause an allergic skin reaction. May cause allergic respiratory reaction. May cause Metal Fume Fever which is characterized by chills, fever, aching muscles, dryness and metal taste in mouth and throat, headaches, sneezing, nausea, and irritation of the nose and trachea. May cause neurological disturbances. May cause lung damage. May cause cancer.

Carcinogenicity:

Ingredient CAS Number	Weight in Percent (%)	NTP (Y/N)	IARC (See Notes)	OSHA (Y/N)	ACGIH (See Notes)
Stainless Steel Substrate	78-80	N	N	N	N
Alumina 1344-28-1	20-22	N	N	N	A4
Platinum Group Metals	< 2	N	N	N	N

Notes:
IARC: Y1=Carcinogenic to humans; Y2A=Probably carcinogenic to humans; Y2B=Possibly carcinogenic to humans; N3=Not classifiable as to its carcinogenicity; N=Not studied or probably not carcinogenic.
ACGIH: A1=Confirmed human carcinogen; A2=Suspected human carcinogen; A3=Confirmed animal carcinogen; A4=Not classifiable as a human carcinogen; A5=Not suspected as a human carcinogen; N=Not studied.

Chronic Health Hazards: None known.

Aggravated Medical Conditions: None known.

4. FIRST AID MEASURES

Inhalation: Not a hazard under normal use conditions. If exposed to excessive levels of dust or fumes, move to fresh air and seek medical attention.

Ingestion: Procedures normally not needed. If large quantities are ingested, seek medical advice.

In Contact: Flush skin with large amounts of water. If irritation persists, get medical attention.

Eye Contact: In case of contact, immediately flush eyes with plenty of water for at least 15 minutes and get medical attention if irritation persists.

5. FIRE FIGHTING MEASURES

Flash Point, °C: Not Determined
Autoignition Temperature, °C: Not Determined
Lower Explosive Limit, %: Not Determined
Upper Explosive Limit, %: Not Determined

Extinguishing Media: Water mist. Carbon dioxide. Dry chemical. Foam.

Fire Fighting Procedures: Positive pressure, self-contained breathing apparatus. Wear full protective clothing.

Unusual Fire and Explosion Hazards: Not a fire or explosion hazard.

6. ACCIDENTAL RELEASE MEASURES

Spill Procedures: Scoop or pick up pieces and place in a suitable container. Avoid dusting.

7. HANDLING AND STORAGE

- Keep container closed.
  Store in a cool, dry location away from incompatible materials.
  Wash thoroughly after handling.
- Avoid generating or breathing dust.
- Do not eat, drink or smoke when using.

8. EXPOSURE CONTROLS/PERSONAL PROTECTION

Ingredient CAS Number	Weight in Percent (%)	OSHA PEL	ACGIH TLV
Stainless Steel Substrate	78-80	None Established	None Established
Alumina 1344-28-1	20-22	15 mg/m^3 (Total dust) 5 mg/m^3 (Respirable dust)	10 mg/m^3
Platinum Group Metals	< 2	1 mg/m^3	1 mg/m^3

Unless otherwise noted, all values are reported as 8-hour Time-Weighted Averages (TWAs) and total dust (particulates only). All ACGIH TLVs refer to the 2006 standards. Unless otherwise noted, all OSHA PELs refer to 29 CFR Part 1910 Air Contaminants: Final Rule, June 30, 1993.

PEL TLV Notes: Ingredient(s) are in a solid form. Not all exposure values may be applicable. The potential health effect statements may not be applicable. If dust, mist, vapor or fume is generated, then exposure limits and potential health effects statements will be applicable.

Personal Protective Equipment: Safety glasses with side shields. Wear clean, body-covering clothing.

Respiratory Protection: Use a NIOSH/MSHA approved respirator as necessary to protect from: dust. If respiratory protection is used, follow all requirements for respiratory programs set forth in OSHA regulations (29 CFR 1910.134).

Ventilation: General ventilation. Local exhaust ventilation as necessary to control dust, mist, vapor or fumes.

9. PHYSICAL AND CHEMICAL PROPERTIES

Form: Solid
Color: Light gray to dark gray
Odor: Odorless

Solubility (in water): Insoluble
pH: 5-6 (4% slurry in water)

10. STABILITY AND REACTIVITY

Stability Data: Stable

Conditions/Hazards to Avoid: Incompatible materials.

Incompatibility (Materials to Avoid): Strong oxidizing agents.

Hazardous Decomposition Products: Toxic fumes.

Polymerization: None anticipated.

Polymerization - Avoid: None anticipated.

11. TOXICOLOGICAL INFORMATION

Information on Product:
No data available.

Information on Components:

Ingredient CAS Number	Weight in Percent (%)	Acute Toxicity - Oral	Acute Toxicity - Inhalation	Acute Toxicity - Dermal	Acute Toxicity - Other
Stainless Steel Substrate	78-80	Not Available	Not Available	Not Available	Not Available
Alumina 1344-28-1	20-22	Not Available	Not Available	Not Available	Not Available
Platinum Group Metals	< 2	Not Available	Not Available	Not Available	Not Available

12. ECOLOGICAL INFORMATION

Information on Product:

Environmental Fate: No data available.

Ecotoxicological Information: No data available.

13. DISPOSAL CONSIDERATIONS

US EPA Waste Number: Not Regulated
Disposal of Waste Method: Local disposal laws and regulations will determine the proper waste disposal/recycling/reclamation procedure. Disposal requirements are dependent on the hazard classification and will vary by location and the type of disposal selected. All waste materials should be reviewed to determine the applicable hazards (testing may be necessary).

14. TRANSPORT INFORMATION

International Transport Regulations:

ICAO Class: Not Regulated

IMO Class: Not Regulated

US Transportation Regulations:

DOT Classification: Not Regulated

Canadian Transportation of Dangerous Goods (TDG):

TDG Classification: Not Regulated

15. REGULATORY INFORMATION

International Inventories:

United States:	This product or its ingredients are listed on or compliant with the TSCA Inventory.
Canada:	Not Determined
Europe:	Not Determined
Japan:	Not Determined
Australia:	Not Determined
Korea:	Not Determined
Philippines:	Not Determined
China:	Not Determined

US Federal Regulations:

Ingredient CAS Number	Weight in Percent (%)	Subject to SARA 313 Reporting
Stainless Steel Substrate	78-80	No
Alumina 1344-28-1	20-22	No
Platinum Group Metals	< 2	No

SARA 311/ 312 Hazard Categories:
Acute Health Hazard

CAA 602 Ozone Depleting Substances (ODS):
This product neither contains nor is manufactured with an ozone depleting substance subject to the labeling requirements of the Clean Air Act Amendments 1990 and 40 CFR Part 82.

US State Regulations:

VOC Content (CARB): Not Determined

Canadian Regulations:
WHMIS Classification:
Class D Division 2 Subdivision B
This product has been classified in accordance with the hazard criteria of the *Controlled Products Regulations* and the MSDS contains all the information required by the *Controlled Products Regulations* .

16. OTHER INFORMATION

Revision number:	3
Section(s) Revised in this Version:	Section 1: Chemical Product and Company Identification Section 16: Other Information
Prepared By:	Corporate Environmental Health & Safety Group

.PORTANT: WHILE THE DESCRIPTIONS, DESIGNS, DATA AND INFORMATION CONTAINED HEREIN ARE PRESENTED IN GOOD FAITH AND BELIEVED TO BE ACCURATE , IT IS PROVIDED FOR YOUR GUIDANCE ONLY. BECAUSE MANY FACTORS MAY AFFECT PROCESSING OR APPLICATION/USE, WE RECOMMEND THAT YOU MAKE TESTS TO DETERMINE THE SUITABILITY OF A PRODUCT FOR YOUR PARTICULAR PURPOSE PRIOR TO USE. NO WARRANTIES OF ANY KIND, EITHER EXPRESSED OR IMPLIED, INCLUDING WARRANTIES OF MERCHANTABILITY OR FITNESS FOR A PARTICULAR PURPOSE, ARE MADE REGARDING PRODUCTS DESCRIBED OR DESIGNS, DATA OR INFORMATION SET FORTH, OR THAT THE PRODUCTS, DESIGNS, DATA OR INFORMATION MAY BE USED WITHOUT INFRINGING THE INTELLECTUAL PROPERTY RIGHTS OF OTHERS. IN NO CASE SHALL THE DESCRIPTIONS, INFORMATION, DATA OR DESIGNS PROVIDED BE CONSIDERED A PART OF OUR TERMS AND CONDITIONS OF SALE. FURTHER, YOU EXPRESSLY UNDERSTAND AND AGREE THAT THE DESCRIPTIONS, DESIGNS, DATA, AND INFORMATION FURNISHED BY BASF HEREUNDER ARE GIVEN GRATIS AND BASF ASSUMES NO OBLIGATION OR LIABILITY FOR THE DESCRIPTION, DESIGNS, DATA AND INFORMATION GIVEN OR RESULTS OBTAINED, ALL SUCH BEING GIVEN AND ACCEPTED AT YOUR RISK.
END OF DATA SHEET

EXEMPT EQUIPMENT
(FORM 3.17-H)

DISTRICT: Colusa County	**< DISTRICT USE ONLY =**
	DISTRICT ID:
COMPANY NAME: PG&E	**FACILITY NAME: CGS**

I. EQUIPMENT EXEMPT FROM DISTRICT PERMIT REQUIREMENTS

EXEMPT EQUIPMENT	EQUIPMENT DESCRIPTION	BASIS FOR EXEMPTION
Unit 1 Wet Cooling System	Wet cooling system	Rule 3.0, 3.1, 3.3(d)(3) and (h)
Unit 2 Wet Cooling System	Wet cooling system	Rule 3.0, 3.1, 3.3(d)(3) and (h)

COMPLIANCE PLAN
(FORM 3.17-I1)

DISTRICT: Colusa	< DISTRICT USE ONLY =
	DISTRICT ID:
COMPANY NAME: PG&E	FACILITY NAME: CGS

I. PROCEDURE FOR USING FORM 3.17-I

This form shall be submitted as part of the Title V Application. The Responsible Official shall identify the applicable federal requirement(s) to which the source is subject. In the Compliance Plan (Form 3.17-I), a Responsible Official shall identify whether the source identified in the Title V Application currently operates in compliance with all applicable federal requirements.

II. APPLICABLE FEDERAL REQUIREMENTS

Source(s): Units 1 and 2 (Turbines and HRSGs)

Applicable Requirement	Summary Title	In Compliance?	Exempt?	Comment	Effective Date*
40 CFR 63	Title III - MACT	Yes	No	Case specific MACT	APPL
40 CFR 60	NSPS Subpart KKKK	Yes	No	See Attachment G	OP
40 CFR 52.21	PSD Provisions	Yes	No	See Attachments E and F	APPL
40 CFR 72-75	Title IV-Acid Rain Provisions	Yes	No	See Attachment I	APPL
40 CFR 70	Title V Provisions	Yes	No	This application fulfills the filing requirements.	OP + 12 months
CHSC 44300	Air Toxics Hot Spots Program	Yes	No	ATIP, ATIR to be filed on APCD schedule.	OP
Rule 1.8	Emissions Monitoring	Yes	No		OP
Rule 1.9	Records/Reports	Yes	No		OP
Rule 1.10	Source Tests	Yes	No		OP
Rule 1.11	Field Inspections	Yes	No		OP
Rule 1.12	APE, Maintenance	Yes	No		OP
Rule 1.13	Equipment Breakdown	Yes	No		OP
Rule 2.10	Nuisance	Yes	No		OP
Rule 2.13	Visible Emissions	Yes	No		CN, OP
Rule 2.15	PM Concentration	Yes	No		OP
Rule 2.16	Dusts and Fumes	Yes	No		OP
Rule 2.17	Separation of Emissions	Yes	No		OP
Rule 2.18	Combination of Emissions	Yes	No		OP
Rule 2.22	Sulfur Oxides	Yes	No		OP
Rule 2.23	Reduced Sulfur Compounds	Yes	No		OP

Rule 3.0	General Requirements	Yes	No		APPL
Rule 3.1	Permits Required	Yes	No		APPL
Rule 3.6	Standards for ATC-NSR	Yes	No		APPL
Rule 3.18	Major HAPs Source	Yes	No		APPL
CCAPCD PTO, 3/30/11	Permit to Operate (NSR), Rule 3.6	Yes	No	See Attachment J, Conditions 1-12, 14-19.	3/30/11
Amended PSD Permit, SAC 06-01, 3/19/10	Sections I thru XI, 40 CFR 52.21.	Yes	No	See Attachment F	3/19/10
Colusa APCD Acid Rain Permit, 2009-11-ARP-IV-1, 3/1/10	Acid Rain Provisions, Title IV CAA	Yes	No	See Attachment I	3/1/10
Source(s): NG Water Bath Heater					
Rule 2.39	Process Heaters	Yes	No	See Attachment J, Conditions 1-10, 13, 14, 17-19.	APPL
Basic CCAPCD regs as noted above. Effective at date of OP.					
Source(s): Ammonia Tank/System for SCR					
40 CFR 68	RMP Provisions	Yes	No	See Facility RMP for ammonia.	OP

*APPL = at time of ATC application submittal, OP = at time of commencement of operations, CN = at time of commencement of construction.

See attached text summary of applicable requirements and regulations.

Colusa Generating Station #21006-259

CCAPCD Applicable Requirements-Brief Summaries of Rule Requirements

Regulation 1 – General Provisions

Rule 1.8 "Emission Monitoring": The Air Pollution Control Officer may require the owner of any air contaminant source to install, use, and maintain monitoring equipment; sample emissions; establish and maintain records; and make periodic emission reports in a format acceptable to the Air Pollution Control Officer.

Rule 1.9 "Records and Reports": Air pollution monitoring data, facility operation records, and such fuel composition data as deemed necessary shall be recorded, compiled, and submitted to the Air Pollution Control Officer by the owner of a stationary source.

Rule 1.10 "Tests": All tests shall be made and the results calculated in accordance with test procedures approved by the Air Pollution Control Officer. All tests shall be made under the direction of person qualified by training and experience in the field of air pollution control and approved by the Air Pollution Control Officer.

The Air Pollution Control Officer may conduct or require the owner of a stationary source to conduct tests of emissions of air contaminants from any source. Upon request of the Air Pollution Control Officer, the person responsible for the source to be tested shall provide necessary holes in stacks or ducts and such other safe and proper sampling and testing facilities, exclusive of instruments and sensing devices as may be necessary for proper determination of the emission of air contaminants.

Rule 1.11 "Field Inspection": Each source of air pollution subject to permit or registration shall be inspected or tested at such intervals of time so that no extended periods of violations will occur.

Rule 1.12 "Air Pollution Equipment, Scheduled Maintenance": In the case of shutdown or restart of air pollution control equipment for necessary scheduled maintenance, the intent to shut down such equipment shall be reported to the Air Pollution Control Officer at least 24 hours prior to the planned shutdown. Such prior notice shall include, but is not limited to the following:

- Identification of the specific facility to be taken out of service as well as its location and permit number;
- The expected length of time that the air pollution control equipment will be out of service;
- The nature and quantity of emissions of air contaminants likely to occur during the shutdown period;
- Measures such as the use of off-shift labor and equipment that will be taken to minimize the length of the shutdown period;

- The reasons that it would be impossible or impractical to shutdown the source operation during the normal facility maintenance period.

Rule 1.13 "Equipment Breakdown": In the event that any emission source, air pollution control equipment, or related facility breaks down in such a manner that may cause the emission of air contaminants in violation of this article, the person responsible for such equipment shall immediately notify the Air Pollution Control Officer of such failure or breakdown and subsequently provide a written statement giving all pertinent facts, including the estimated duration of the breakdown. The Air Pollution Control Officer shall be notified when the condition causing the failure or breakdown has been corrected and the equipment is again in operation.

Regulation 2 – Prohibitions

Rule 2.10 "Nuisance": In accordance with Section 41700 of the California Health and Safety Code, a person shall not discharge from any source whatsoever such quantities of air contaminants or other materials that cause injury, detriment, nuisance, or annoyance to any considerable number of persons or to the public or that endanger the comfort, repose, health, or safety of any such person or the public or which cause or have a natural tendency to cause injury or damage to business or property. The air quality impact analysis is designed to ensure that the proposed project will not cause any public nuisance.

Rule 2.13 "Visible Emissions": As provided by Section 41701 of the California Health and Safety Code, a person shall not discharge into the atmosphere from any single source of emissions whatsoever, any air contaminants for a period or periods aggregating more than 3 minutes in any 1 hour which is:

a. As dark or darker in shade as that designated as No. 2 on the Ringelmann Chart, as published by the United States Bureau of Mines; or

b. Of such opacity as to obscure an observer's view to a degree equal to or greater than does smoke described in subsection a., above.

Rule 2.15 "Particulate Matter Concentration": A person shall not discharge into the atmosphere from any source, except as allowed by Rule 2.14, subsection a. and c. of this regulation, particulate matter in excess of 0.3 grain per standard dry cubic foot of gas. Emissions from each source at the site are expected to be compliant with this regulation. PM10 emissions are not expected to exceed 0.02 grain per dry standard cubic feet.

When the source involves a combustion process, the concentration must be calculated to 12 percent carbon dioxide (CO2). In measuring the combustion, contaminants from incinerators used to dispose of combustible refuse by burning the CO2 produced by combustion of any liquid or gaseous fuels shall be excluded from the calculation to 12 percent of CO2.

Rule 2.16 "Dust and Fumes": A person shall not discharge in any 1 hour from any source whatsoever, except as provided by Rule 2.14, subsections a. and c. of this regulation, dust or fumes in total quantities in excess of the amounts shown in the following table:

To use the following table, take the process weight per hour as such is defined in the attached definitions. Then find this figure on the table opposite which is the maximum number of pounds of contaminants which may be discharged into the atmosphere in any one hour. As an example: if "A" has a process which emits contaminants into the atmosphere and which process takes four (4) hours to complete, he will divide the weight of all materials in the specific process, in this example 2,400 lbs., by '4', giving a process weight per hour of 600 lbs. The table shows that "A" may not discharge more than 1.83 lbs., in any one hour during the process. Interpolation of the data in the table for process weights up to 60,000 pounds/hour shall be accomplished by use of the equation:

$$E = 4.10\ P^{0.67}$$

and interpolation and extrapolation of the data for process weight rates in excess of 60,000 pounds/hour shall be accomplished by use of the equation:

$$E = (55.0\ P) - 40$$

E = Rate of emission in pounds/hour;

P = Process weight rate in ton/hour.

ALLOWABLE RATE OF EMISSION BASED ON PROCESS WEIGHT RATE

Process Weight Rate		Rate of Emission	Process Weight Rate		Rate of Emission
Lb. Hr.	Ton Hr.	Lb. Hr.	Lb. Hr.	Ton Hr.	Lb. Hr.
100	0.15	0.551	16,000	8.0	16.5
200	0.10	0.877	18,000	9.0	17.9
400	0.20	1.40	20,000	10.0	19.2
600	0.30	1.83	30,000	15.0	25.2
800	0.40	2.22	40,000	20.0	30.5
1,000	0.50	2.58	50,000	25.0	35.4
1,500	0.75	3.38	60,000	30.0	40.0
2,000	1.00	4.10	70,000	35.0	41.3
2,500	1.25	4.70	80,000	40.0	42.5
3,000	1.50	5.38	90,000	45.0	43.6
3,500	1.75	5.96	100,000	50.0	50.0
4,000	2.00	6.52	120,000	60.0	46.3

5,000	2.50	7.58	140,000	70.0	47.8
6,000	3.00	8.56	180,000	80.0	49.0
7,000	3.50	9.49	200,000	100.0	51.2
8,000	4.00	10.4	1,000,000	500.0	69.0
9,000	4.50	11.2	2,000,000	1,000.0	77.6
10,000	5.00	12.0	6,000,000	3,000.0	92.7
12,000	6.00	13.6			

Rule 2.17 "Separation of Emissions": If air contaminants from a single source operation are emitted through two or more emission points, the total emitted quantity of any air contaminant limited in this regulation cannot exceed the quantity that would be the allowable emission through a single emission point; the total emitted quantity of any such air contaminant shall be taken as the product of the highest concentration measured in any of the emission points and the combined exhaust gas volume from all emission points, unless the person responsible for the source operation establishes, to the satisfaction of the Air Pollution Control Officer, the correct total emitted quantity.

Rule 2.18 "Combination of Emissions":

a. If air contaminants from two or more source operations are combined prior to emission and there are adequate and reliable means reasonably susceptible to confirmation and use by the Air Pollution Control Officer for establishing a separation of the components of the combined emission to indicate the nature, extent, quantity, and degree of emission arising from each source operation, then all of the applicable prohibitions shall apply to each such source operation separately.

b. If the air contaminants from two or more source operations are combined prior to emission, and the combined emissions cannot be separated according to the requirements of subsection a. of this rule, then all applicable prohibitions shall be applied to the combined emission as if it originated in a single source operation, subject to the most stringent limitations and requirements placed by these prohibitions on any of the source operations whose air contaminants are so combined.

Rule 2.22 "Sulfur Oxides": A person shall not discharge into the atmosphere from any single source of emission whatsoever, any sulfur oxides in excess of 0.2 percent by volume (2,000 ppm) collectively calculated as sulfur dioxide (SO2).

Rule 2.23 "Reduced Sulfur Compounds": a. It shall be unlawful for any person to permit the emissions of air contaminants from any premises that will result in ground level concentrations of total reduced sulfur compounds, expressed as hydrogen sulfide, in excess of 0.03 ppm for a period of 60 minutes.

Rule 2.39 "Industrial, Institutional, and Commercial Boilers, Steam Generators, and Process Heaters Oxides of Nitrogen Control Measure" (adopted 1/23/96): The purpose of this rule is to reduce oxides of nitrogen emissions to levels consistent with reasonably available control technology (RACT). Gaseous fired units with a rated heat input capacity greater or equal to 5 million BTU per hour shall demonstrate compliance with the emission limit of 0.084 lbs/MMBtu of heat input or 70 ppmv for oxides of nitrogen.

Regulation 3 – Permits

Rule 3.0 "General Requirements":

a. No person shall cause or permit the construction or modification of any new source of air contaminants without first obtaining an Authority to Construct from the Air Pollution Control Officer so as to comply with applicable regulations and rules and ambient air quality standards of the District.

b. The Control Officer shall not approve such construction or modification unless the applicant demonstrates to the satisfaction of the Air Pollution Control Officer that the new source can be expected to comply with all the applicable state laws and District regulations and rules.

Rule 3.1 "Permits Required" (amended 4/12/94): The permits required are the Authority to Construct and a Title V Permit to Operate issued by the Air Pollution Control Officer under Title V of the Federal Clean Air Act as amended in 1990.

Rule 3.6 "Standards for Authority to Construct (New Source Review) (adopted 09/14/93): The purpose of this rule is to establish preconstruction review requirements for new and modified stationary sources of air pollution for use of BACT, analysis of air quality impacts, and to ensure that the operation of such sources does not interfere with the attainment or maintenance of ambient air quality standards.

1. Best Available Control Technology: An Applicant shall apply BACT to any new emissions unit or modification of an existing emissions unit, which results in an emissions increase and the potential to emit for the emissions unit that equals or exceeds the following amounts:

2. Offset Requirements, General: Offsets shall be required for a new stationary source with a potential to emit, calculated pursuant to Rule 3.6.d.4., of nonattainment pollutants or their precursors equal to or exceeding 25 tons per year. The amount of offsets required shall be at least equal to that portion of the potential to emit that exceeds 25 tons per year.

3. Location of Offsets and Offsets Ratios: Offset ratio and the corresponding distances from the proposed stationary source shall be:

A. Onsite, at a ratio of 1:1

B. Within 20 miles, at a ratio of 1.2:1

C. 20 to 50 miles, at a ratio of 1.5:1

D. Over 50 miles, at a ratio of 2:1

4. Interpollutant Offsets: The Air Pollution Control Officer may approve interpollutant offsets on a case-by-case basis, provided that the Applicant demonstrates to the satisfaction of the Air Pollution Control Officer, through the use of an impact analysis, that the emission increases from the new or modified source will result in a net air quality benefit and will not cause or contribute to a violation of any air quality standard. In such cases, the Air Pollution Control Officer may, based upon an air quality analysis, impose offset ratios greater than the requirements of this rule.

5. Ambient Air Quality Standards: In no case shall the emissions from the new or modified stationary source cause or make worse the violation of an Ambient Air Quality Standard. An impact analysis shall be used to estimate the effects of a new or modified source. In making this determination, the Air Pollution Control Officer shall take into account the mitigation of emissions through offsets obtained pursuant to this rule.

Federal and State Level Applicable Regulations

Prevention of Significant Deterioration Requirements

In addition to the ambient air quality standards described above, the federal Prevention of Significant Deterioration program has been established to protect deterioration of air quality in those areas that already meet NAAQS. The PSD program specifies allowable concentration increases for attainment pollutants due to new emission sources. These increases allow economic growth while preserving the existing air quality, protecting public health and welfare, and protecting Class I areas (national parks and wilderness areas). The PSD regulations require major stationary sources to undergo a preconstruction review that includes an analysis and implementation of BACT, a PSD increment consumption analysis, an ambient air quality impact analysis, and analysis of AQRVs (impacts on visibility). The CGS was and is subject to these requirements.

The incremental emission PSD triggers for SO2, NOx, PM10, and CO are as shown in the original permitting application submittals. For project emissions of SO2, NOx, or PM10 above these PSD triggers, the Applicant must demonstrate through modeling that such emissions will not interfere with the attainment or maintenance of the applicable NAAQS and will not cause an exceedance of the applicable PSD increments. For project emissions of CO that exceed the trigger levels, the Applicant must demonstrate through modeling that the increase in emissions will not interfere with the attainment or maintenance of the CO NAAQS. There are no Class I areas within CCAPCD. Yolla Bolly-Middle Eel Wilderness and Caribou Wilderness are the Class I areas nearest to the site. All areas within the district are Class II areas; there are no Class III areas within the CCAPCD.

Acid Rain Program Requirements

Title IV of the CAAA applies to sources of air pollutants that contribute to acid rain formation, including certain sources of SO2 and NOx emissions. Title IV is implemented by the U.S. EPA under 40 CFR 72, 73, and 75. Allowances of SO2 emissions are set aside in 40 CFR 73. Sources subject to Title IV are required to obtain SO2 allowances, to monitor their emissions, and obtain SO2 allowances when a new source is permitted. Sources such as the CGS that use pipeline-quality natural gas are exempt from many of the acid rain program requirements. However, these sources must still estimate SO2 and CO2 emissions, and monitor NOx emissions with certified continuous emissions monitoring systems (CEMS). All subject facilities must submit an acid rain permit application to U.S. EPA 24 months prior to commencing operation.

New Source Performance Standards

New Source Performance Standards (NSPS) have been established by U.S. EPA to limit air pollutant emissions from certain types of new and modified stationary sources. The NSPS regulations are contained in 40 CFR 60 and cover nearly 70 source categories. Stationary gas turbines are regulated under Subpart KKKK. In general, local emission limitation rules or BACT requirements are more restrictive than the NSPS requirements. For example, the controlled NOx emissions from the CGS's stationary gas turbine is controlled to 2.0 or less parts per million by volume dry (ppmvd) at 15 percent oxygen, significantly less than the NSPS limit of 15 ppmvd at 15 percent oxygen.

The NSPS fuel requirements for SO2 are satisfied by the use of natural gas, and emissions and fuel monitoring will be performed to comply with NSPS, acid rain, and other regulatory requirements.

Federally Mandated Operating Permits

Title V of the CAA requires U.S. EPA to develop a federal operating permit program that is implemented under 40 CFR 70. This program is administered by CCAPCD under Regulation 3, Rule 3.17. Permits must contain emission estimates based on potential-to-emit, identification of all emission sources and controls, a compliance plan, and a statement indicating each source's compliance status. The permits must also incorporate all applicable federal, state, or CCAPCD orders, rules and regulations.

Because the facility will constitute a new stationary source, the Applicant will submit a complete Title V permit application for a Title V permit to operate within 12 months after plant startup. This application document fulfills the Title V initial filing requirement.

Air Toxics "Hot Spots" Program

As required by the California Health and Safety Code Section 44300, all facilities with criteria air pollutant emissions in excess of 10 tons per year are required to submit air toxic "Hot Spots" emissions information. This requirement is applicable only after the start of operation. CGS will submit its ATIP and ATIR based upon the Districts notification and submittal schedule.

New Source Review Requirements

The federal Clean Air Act, U.S. EPA regulations, and the California Clean Air Act establish the criteria for siting new and modified emission sources. The federally mandated process for permitting new or modified sources in federal nonattainment areas is referred to as Nonattainment New Source Review (NNSR). This requirement is not applicable in this case because the county is in attainment for all NAAQS. Due the state-level non-attainment status, CCAPCD is responsible for NSR rule development and enforcement for sources in Colusa County. The District's NSR rules are contained in Regulation 3, Rule 3.6. The rules required that first, Best Available Control Technology (BACT) must be applied to any new source that emits above the level specified in Regulation 3, Rule 3.6. Second, all potential emission increases from the sources above specified thresholds must be offset by real, quantifiable, surplus, permanent, and enforceable emission decreases in the form of ERCs, Regulation 3, Rule 3.16 "Emission Reduction Credit and Banking". Third, ambient air quality impact assessments must be conducted to confirm that the proposed project does not cause or contribute to a violation of a federal or California AAQS or jeopardize public health. Finally, the Applicant must certify that all major sources owned or operated in the State of California are either in compliance or on an approved schedule for compliance with applicable air quality regulations. All of the above noted regulatory submittals and analyses under the NSR rule have been submitted, reviewed, and approved.

COMPLIANCE PLAN
(FORM 3.17-I2)

DISTRICT: Colusa	**< DISTRICT USE ONLY =**
	DISTRICT ID:
COMPANY NAME: PG&E	**FACILITY NAME: CGS**

III. COMPLIANCE CERTIFICATION

Under penalty of perjury, I certify the following:

[Ξ] ***Based on information and belief formed after reasonable inquiry, the source identified in this application will continue to comply with the applicable federal requirement(s) with which the source is in compliance as identified in form 3.17-I1;***

[Ξ] ***Based on information and belief formed after reasonable inquiry, the source identified in this application will comply with the future-effective applicable federal requirement(s) identified in form 3.17-I1, on a timely basis[1];***

9 ***Based on information and belief formed after reasonable inquiry, the source identified in this application is not in compliance with the applicable federal requirement(s), identified in form 3.17-I1, and I have attached a compliance plan schedule.[2]***

_____ _____

Signature of Responsible Official Date

1. Unless a more detailed schedule is expressively required by an applicable federal requirement.

2. At the time of expected permit issuance, if the source expects to be out of compliance with an applicable federal requirement, the applicant is required to provide a compliance schedule with this application, with the following exception. A source which is operating under a variance that is effective for less than 90 days need not submit a Compliance Schedule. For sources operating under a variance, which is in effect for more than 90 days, the Compliance Schedule is the schedule that was approved as part of the variance granted by the hearing board.

The compliance schedule shall contain a schedule of remedial measures, including an enforceable sequence of actions with milestones, leading to compliance with this applicable federal requirement. For sources operating under a variance, the compliance schedule is part of the variance granted by the hearing board. The compliance schedule shall resemble, and be at least as stringent as that contained in any judicial consent decree or administrative order to which the source is subject. For sources not operating under a variance, consult the Air Pollution Control Officer regarding procedures for obtaining a compliance schedule.

COMPLIANCE PLAN
(FORM 3.17-I2)

DISTRICT: Colusa	< DISTRICT USE ONLY =
	DISTRICT ID:
COMPANY NAME: PG&E	FACILITY NAME: CGS

III. COMPLIANCE CERTIFICATION

Under penalty of perjury, I certify the following:

✗ *Based on information and belief formed after reasonable inquiry, the source identified in this application will continue to comply with the applicable federal requirement(s) with which the source is in compliance as identified in form 3.17-I1;*

✗ *Based on information and belief formed after reasonable inquiry, the source identified in this application will comply with the future-effective applicable federal requirement(s) identified in form 3.17-I1, on a timely basis[1];*

☐ *Based on information and belief formed after reasonable inquiry, the source identified in this application is not in compliance with the applicable federal requirement(s), identified in form 3.17-I1, and I have attached a compliance plan schedule.[2]*

Signature of Responsible Official

1/24/12
Date

1. Unless a more detailed schedule is expressively required by an applicable federal requirement.

2. At the time of expected permit issuance, if the source expects to be out of compliance with an applicable federal requirement, the applicant is required to provide a compliance schedule with this application, with the following exception. A source which is operating under a variance that is effective for less than 90 days need not submit a Compliance Schedule. For sources operating under a variance, which is in effect for more than 90 days, the Compliance Schedule is the schedule that was approved as part of the variance granted by the hearing board.

   The compliance schedule shall contain a schedule of remedial measures, including an enforceable sequence of actions with milestones, leading to compliance with this applicable federal requirement. For sources operating under a variance, the compliance schedule is part of the variance granted by the hearing board. The compliance schedule shall resemble, and be at least as stringent as that contained in any judicial consent decree or administrative order to which the source is subject. For sources not operating under a variance, consult the Air Pollution Control Officer regarding procedures for obtaining a compliance schedule.

COMPLIANCE PLAN CERTIFICATION
(FORM 3.17-J1)

DISTRICT: Colusa County	**< DISTRICT USE ONLY =**
	DISTRICT ID:
COMPANY NAME: PG&E	**FACILITY NAME: CGS**

I. CERTIFICATION STATUS

1. Indicate the dates the applicant intends to submit the **COMPLIANCE CERTIFICATION REPORT** to the district during the entire permit term. The district federal operating permits rule requires the applicant to submit this report at least annually.

The CCR will be submitted annually. The submittal date will be established by the APCD, but it is anticipated that the CCR will be submitted concurrently with the 4th Quarter emissions report.

2. For sources required to have a schedule of compliance to remedy a violation, indicate the dates the applicant intends to submit **CERTIFIED PROGRESS REPORTS** to the district during the permit term. The district federal operating permits rule requires the applicant to submit this report at least semiannually.

N/A

3. Describe the compliance status of the source with respect to applicable enhanced monitoring, and compliance certification requirements of Section 114(a)(3) of the Clean Air Act:

The source (facility) is in compliance with all required monitoring provisions as outlined in the current PTO (see Attachment J).

COMPLIANCE PLAN CERTIFICATION
(FORM 3.17-J2)

DISTRICT: Colusa County	**< DISTRICT USE ONLY =**
	DISTRICT ID:
COMPANY NAME: PG&E	**FACILITY NAME: CGS**

II. CERTIFICATION INFORMATION

Each applicable regulation is to be reviewed to determine if the specific regulation contains any applicable monitoring, reporting, recordkeeping, or testing language or requirements applicable to the source(s). If no such requirements were noted in the applicable regulation, then the source should indicate how the source or facility will demonstrate compliance, i.e., Proposed Compliance Method column.

Source(s): Units 1 and 2 (Turbines and HRSGs)

Applicable Req'mt.	Title	Monitoring	Reporting	Recordkeeping	Test Method	Proposed Compliance Methods
40 CFR 63	Title III - MACT	No	Yes	Yes	See Att J	Report annual emission based on fuel use and source testing.
40 CFR 60	NSPS Subpart KKKK	Yes, see Att G	Yes, see Att G	Yes, see Att G	Yes, see Att G	None required
40 CFR 52.21	PSD Provisions	Yes, see Att F	Yes, see Att F	Yes, see Att F	Yes, see Att F	None required
40 CFR 72-75	Title IV-Acid Rain Provisions	Yes	Yes	Yes	CEMs and Fuel Analysis	None required
40 CFR 70	Title V Provisions	Yes	Yes	Yes	As specified in the T5 permit	None required
CHSC 44300	Air Toxics Hot Spots Program	No	Yes	No	No	Prepare ATIP and ATIR at District request, and update on District schedule.
Rule 1.8	Emissions Monitoring	Yes	Yes	Yes	See Atts F, G, I, J	None required
Rule 1.9	Records/Reports	Yes	Yes	Yes	See Atts F, G, I, J	None required
Rule 1.10	Source Tests	No	No	No	See Att J	None required
Rule 1.11	Field Inspections	No	No	No	See Att J	None required
Rule 1.12	APE, Maintenance	No	Yes	Yes	No	None required

Rule 1.13	Equipment Breakdown	Yes (implied)	Yes	Yes	No	Comply with notification and reporting req's.
Rule 2.10	Nuisance	No	No	No	No	None required
Rule 2.13	Visible Emissions	Yes (implied)	Yes	Yes	EPA M9 or COMS	EPA M9 observations during annual source test cycle.
Rule 2.15	PM Concentration	No	Yes	No	See Atts F, J	Source testing per Att J.
Rule 2.16	Dusts and Fumes	No	No	No	No	Source testing per Att J.
Rule 2.17	Separation of Emissions	No	No	No	No	Consult with APCD
Rule 2.18	Combination of Emissions	No	No	No	No	Consult with APCD
Rule 2.22	Sulfur Oxides	No	No	No	See Att J	Fuel S analyses, See Att J
Rule 2.23	Reduced Sulfur Compounds	No	No	No	No	Fuel S analyses, See Att J
Rule 3.0	General Requirements	No	No	No	No	None required
Rule 3.1	Permits Required	No	No	No	No	None required
Rule 3.6	Standards for ATC-NSR	No	No	No	No	None required
Rule 3.18	Major HAPs Source	No	No	No	No	Maintain current T-BACT
CCAPCD PTO, 3/30/11	Permit to Operate (NSR), Rule 3.6	Yes, see Att J	Yes, see Att J	Yes, see Att J	Yes, see Att J	
Amended PSD Permit, SAC 06-01, 3/19/10	Sections I thru XI, 40 CFR 52.21.	Yes, see Att F	Yes, see Att F	Yes, see Att F	Yes, see Att F	
Colusa APCD Acid Rain Permit, 2009-11-ARP-IV-1, 3/1/10	Acid Rain Provisions, Title IV CAA	Yes, see Att I	Yes, see Att I	Yes, see Att I	Yes, see Att I	
Source(s): NG Water Bath Heater						
Rule 2.39	Process Heaters	Yes	Yes	Yes	Att J, #8	
Basic CCAPCD regs as noted above. Effective at date of OP. See Att J.						
Source(s): Ammonia Tank/System for SCR						
40 CFR 68	RMP Provisions	Yes	Yes	Yes	n/a	Maintain RMP per CUPA requirements

See the attached supplemental table to Form 3.17-J2.

Colusa Generating Station
First Year and Ongoing Monitoring, Reporting, and Recordkeeping Requirements

Supplement to Form 3.17-J2

Permit Cond # or Rule Citation	Monitoring, Reporting, Recordkeeping Requirement	Agency Involved	Agency Due Date	Comments
CCAPCD ATC, 3-2-09				
#3	APC Maintenance startup/shutdown	CCAPCD	24 hrs prior to	applies to startup and shutdown of APC equipment/systems
#4	upset/breakdown	CCAPCD	within 24 hrs	submit followup written report on occurrence within 72 hours
#7	source test notification, annual source testing	CCAPCD	10 days prior to	notify APCD at least 10 days before the actual test date*
#7	source test protocol	CCAPCD	45 days prior to	submit test protocol to APCD 45 days prior to test date*
#10	monthly gas sulfur content tests	CCAPCD	monthly	suggested submittal date is NLT the 30th day of the following month
#15/16	CEMS specifications	CCAPCD		Annual RATA and access to data
#17	CEMS quarterly reports	CCAPCD	30 days after end of calendar qtr	quarterly report must also contain process and startup data
#18	annual emissions report	CCAPCD	not specified	comprehensive annual emissions and operations report
				*applicable to initial and follow-on annual testing
EPA Region 9 PSD Permit, Amended 3-19-10				
#II.A	commencement of construction	EPA Region 9	within 30 days	notify EPA-9 within 30 days of the start of construction
#II.B	startup date	EPA Region 9	within 15 days	notify EPA-9 within 15 days of the startup (first firing)
#II.C	initial stack performance tests	EPA Region 9	30 days prior to test date	notify EPA-9 30 days prior to performance test date
#X.F.2	source test protocol	EPA Region 9	30 days prior to test date	submit test protocol to EPA-9 30 days prior to test date
#X.F.7	source test report	EPA Region 9	within 60 days of test	submit to EPA-9 within 60 days after testing the stack test report
#II.D	initial CEMS performance tests	EPA Region 9	30 days prior to test date	notify EPA-9 30 days prior to CEMs performance test date
#X.C.6	CEMS test protocol	EPA Region 9	30 days prior to test date	submit test protocol to EPA-9 30 days prior to test date
#X.C.7	CEMs test report	EPA Region 9	within 60 days of test date	submit to EPA-9 within 60 days after testing the CEMS test report
#IV.A	upset/breakdown	EPA Region 9	within 2 working days	notify EPA-9 within 2 working days of upset/malfunction/breakdown, notification by fax or email to R9.AEO@epa.gov
#IV.B	upset/malfunction/breakdown report	EPA Region 9	within 15 days of IV.A	submit written report to EPA-9 with details on #IV.A within 15 days
#VI	transfer of ownership	EPA Region 9	none specified	notify EPA-9 of any transfer of ownership
#X.F.9	CEMS annual and quarterly tests	EPA Region 9	within 60 days of test date	submit to EPA-9 within 60 days after testing the CEMS test report
#X.G.5	excess emissions reports	EPA Region 9	within 30 days of end of QTR	submit semi-annual excess emissions reports to EPA-9 (within 30 days of the end of the QTR)
#XI	see Condition XI for all EPA-9 addresses, fax numbers, and email addresses.			

*** per X.E.7 initial starup is defined at "first firing" of each unit, and per X.F.1 stack performance tesst must be initiated within 60 days of the max production date but NLT 180 days after "first firing".

NSPS, Subpart KKKK (40 CFR 60)				
Subpart A, 60.7 (a)(2)	anticipated startup date	CCAPCD/EPA9	30-60 days prior to startup	submit notice to CCAPCD and EPA-9 no earlier than 60 days but no less than 30 days prior to anticipated startup date
Subpart A, 60.7 (a)(3)	actual startup date	CCAPCD/EPA9	within 15 days of startup	submit notice to CCAPCD and EPA-9 no less than 15 days after the actual startup date
Subpart A, 60.7 (a)(5)	CEMS compliance date	CCAPCD/EPA9	30 days prior to demo date	submit notice to CCAPCD and EPA-9 no less than 30 days prior to the CEMS compliance demonstation date
Subpart A, 60.7 (a)(7)(c)	semi-annual excess emissions report	CCAPCD/EPA9	30 days following end of QTR	submit NSPS excess emissions reports semi-annually within 30 days of the end of the applicable QTR

KKKK, 60.4375 (b)	annual source test reports	CCAPCD/EPA9	within 60 days of the test date	submit the source test report per 60.4340 to CCAPCD and EPA-9 within 60 days after the test date
KKKK, 60.4365, 60.4370	fuel sulfur demonstration	CCAPCD/EPA9	prior to startup	suggest compliance with 60.4365(a), this determination should be provided to CCAPCD and EPA-9 prior to startup

Title IV, Acid Rain Provisions

40 CFR 72

Section 72.9	annual compliance certification	EPA/CCAPCD	NLT 60 days after year end	submit to EPA-9 and CAPCD the Acid Rain annual compliance certification NLT 60 days after the end of the calendar year
Section 75.4	CEMS certification tests	EPA/CCAPCD	NLT 90 days after startup	perform CEMS certification tests NLT 90 days after startup, submit test results to EPA-9 and CCAPCD within 30 days after tests
Section 75.61	CEMS certification test date	EPA/CCAPCD	NLT 45 days prior to test date	provide notification of CEMS cert tests to EPA-9 and CCAPCD NLT 45 days prior to the test date
Section 75.62	CEMs monitoring plan	EPA/CCAPCD	NLT 45 days prior to test date	submit the CEMS monitoring plan to EPA-9 and CCAPCD NLT 45 days prior to the test date
Section 75.63	CEMS certification request	EPA/CCAPCD	NLT 30 days after the test date	submit the CEMS certification request and test results to EPA-9 and CCAPCD NLT 30 days after the test date
Section 75.64	quarterly reports/compliance cert	EPA/CCAPCD	30 days following end of QTR	submit required monitoring and emissions reports to EPA-9 and CCAPCD NLT 30 days after the end of the QTR, report must contain a compliance certification

CERTIFICATION STATEMENT
(FORM 3.17-M)

DISTRICT: Colusa County	**< DISTRICT USE ONLY =**
	DISTRICT ID:
COMPANY NAME: PG&E	**FACILITY NAME: CGS**

Identify, by checking off below, the forms and attachments that are part of your application. If the application contains forms or attachments that are not identified below, please identify these attachments in the blank space provided below. Review the instructions if you are unsure of the forms and attachments that need to be included in a complete application.

Forms included with application

X Stationary Source Summary Form
X Total Stationary Source Emission Form
X Compliance Plan Form
X Compliance Plan Certification Form
X Exempt Equipment Form
X Certification Statement Form

List other forms or attachments

X See the following page.

Attachments included with application

X Description of Operating Scenarios
X Sample emission calculations
X Fugitive emission estimates
X List of applicable requirements
Discussion of units out of compliance with applicable federal requirements and, if required, submit a Schedule of Compliance
X Facility schematic showing emission
X NSR Permit
X PSD Permit
Enhanced monitoring protocols
Risk management verification per 112(r)

I certify under penalty of law, based on information and belief formed after reasonable inquiry, that the information contained in this application, composed of the forms and attachments identified above, is true, accurate, and complete.

I certify that I am the responsible official, as defined in CCAPCD Rule 3.17.

_____ _____
Signature of Responsible Official Date

___Randal S. Livingston_____

Print Name of Responsible Official

___Vice-President_____

Title of Responsible Official

CERTIFICATION STATEMENT
(FORM 3.17-M)

DISTRICT: Colusa County	< DISTRICT USE ONLY =
	DISTRICT ID:
COMPANY NAME: PG&E	FACILITY NAME: CGS

Identify, by checking off below, the forms and attachments that are part of your application. If the application contains forms or attachments that are not identified below, please identify these attachments in the blank space provided below. Review the instructions if you are unsure of the forms and attachments that need to be included in a complete application.

	Forms included with application
X	Stationary Source Summary Form
X	Total Stationary Source Emission Form
X	Compliance Plan Form
X	Compliance Plan Certification Form
X	Exempt Equipment Form
X	Certification Statement Form

	Attachments included with application
X	Description of Operating Scenarios
X	Sample emission calculations
X	Fugitive emission estimates
X	List of applicable requirements
	Discussion of units out of compliance with applicable federal requirements and, if required, submit a Schedule of Compliance
X	Facility schematic showing emission
X	NSR Permit
X	PSD Permit
	Enhanced monitoring protocols
	Risk management verification per 112(r)

	List other forms or attachments
X	**See the following page.**

I certify under penalty of law, based on information and belief formed after reasonable inquiry, that the information contained in this application, composed of the forms and attachments identified above, is true, accurate, and complete.

I certify that I am the responsible official, as defined in CCAPCD Rule 3.17.

Signature of Responsible Official _____ Date 1/24/12

___Randal S. Livingston_____

Print Name of Responsible Official

___Vice-President_____

Title of Responsible Official

Colusa County APCD
100 Sunrise Blvd. Suite A-3
Colusa, Ca. 95932 : (530) 458-0595

Supplement to Form 3.17 M-Application Attachments

Facility Name: Colusa Generating Station

Facility ID: 21006-259

Title V Application Attachments

Attachment ID	Attachment Name/Contents
A	CEC Final Decision dated April 2008 (with AQ Amendments)
B	APCD FDOC dated 11/28/06 as Amended 6/5/08
C	PG&E Request to Modify FDOC dated 11/18/08
D	CCAPCD PTO dated 3/2/09
E	Proposed EPA PSD Permit dated 9/09
F	Amended EPA PSD Permit dated 3/19/10
G	NSPS Subpart KKKK Compliance Analysis-Supplement to Form 3.17-I1
H	Unit 1&2-CEMS Data Flow Schematics
I	Acid Rain Permit dated 3/1/10
J	Current CCAPCD PTO dated 3/30/11 and 4/1/11
K	GHG and Air Toxic Emissions Calculations for 2010
L*	Air Quality Analysis, AFC Section 8.1, 11/06
M*	Air Quality Emissions Appendix G-3, AFC, 11/06
N*	Project Description, AFC Section 3.0, Excerpts Only, 11/06 Includes Project Location Maps, Plot Plans, Process Diagrams, Operating Scenario Heat Balances, Fuel Analysis Data, etc.
O	
P	
Q	
*Data in these attachments may have been revised during the CEC and APCD review process.	

Section 2

Colusa County APCD
100 Sunrise Blvd. Suite A-3
Colusa, Ca. 95932 : (530) 458-0595

Attachment A

NOTE:
On 7/15/09, the CEC approved PG&E's Amendment #1. The yellow boxes shown in the Air Quality Section of this Final Decision indicates the conditions and/or verification language that were modified by the CEC. The CEC Order has been appended to the back of this PDF file.

CALIFORNIA
ENERGY
COMMISSION

COLUSA GENERATING STATION

Application For Certification (06-AFC-9)
Colusa County

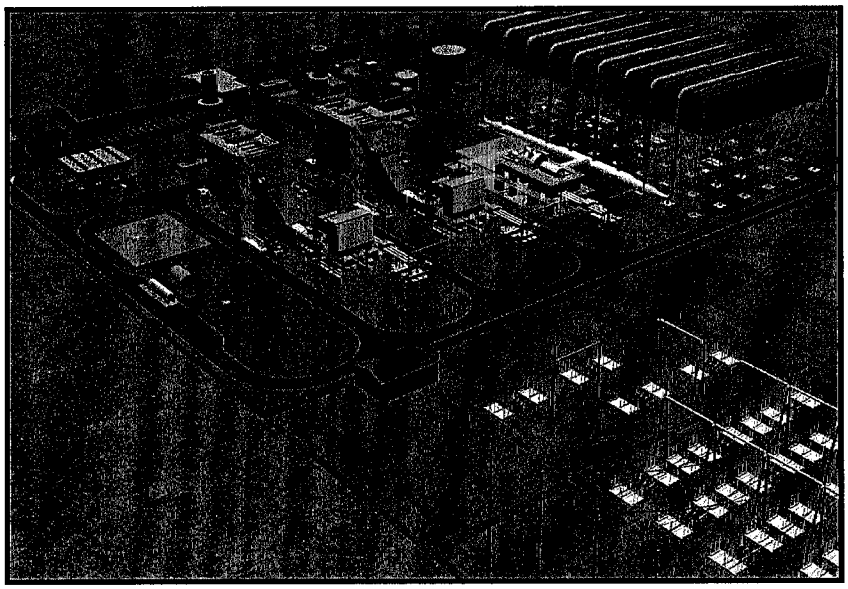

FINAL COMMISSION DECISION

APRIL 2008
(06-AFC-9)
CEC-800-2008-001-CMF

V. PUBLIC HEALTH AND SAFETY ASSESSMENT

Operation of the CGS will create combustion products and utilize certain hazardous materials that could potentially cause adverse health effects to the general public and to the workers at the facility. The following sections describe the regulatory programs, standards, protocols, and analyses that address these issues.

A. AIR QUALITY

This section examines the potential adverse impacts of criteria air pollutant emissions resulting from project construction and operation. In consultation with the local air pollution control district, the Commission determines whether the project will likely conform with applicable LORS, whether it will likely result in significant air quality impacts, including violations of ambient air quality standards, and whether the project's proposed mitigation measures will likely reduce potential impacts to insignificant levels. Applicant and Staff reached agreement on all relevant issues, including the proposed Conditions of Certification.

SUMMARY AND DISCUSSION OF THE EVIDENCE

In carrying out this analysis, the Commission evaluated the following three major points:

- Whether the CGS is likely to conform with applicable federal, state and Colusa County Air Pollution Control District air quality laws, ordinances, regulations, and standards (Title 20, Cal. Code Regs., § 1744 [b]),
- Whether the CGS is likely to cause significant new violations of air quality standards or contribute to existing violations of those standards (Title 20, Cal. Code Regs., § 1742 [b]), and
- Whether the mitigation proposed for the CGS is adequate to lessen the potential impacts to a level of insignificance (Title 20, Cal. Code Regs., § 1742 [b]).

In addition to review by the Commission, the project was reviewed by the Colusa County Air Pollution Control District (District), which has issued its Final Determination of Compliance (FDOC) for the project. The District found the project to be in compliance with all District rules and regulations. The Conditions of Certification recommended by the District in the FDOC are incorporated into the Conditions of Certification in this Decision.

The proposed CGS would be located on an agricultural 100-acre site in northern Colusa County near the Colusa County–Glenn County border. The foothills of the Coastal Range are located approximately one mile to the west of the subject site. The proposed site is located approximately four miles west of Interstate five, six miles north-northeast of Maxwell, 11 miles south-southwest of Willows, and 14 miles north-northwest of Williams.

The project is located within the jurisdiction of the Colusa County Air Pollution Control District. The applicable federal and California ambient air quality standards (AAQS) are presented in **AIR QUALITY Table 1**. The standards are presented in parts per million (ppm), or in milligrams or micrograms of pollutant per cubic meter of air (mg/m^3 or $\mu g/m^3$).

///

///

/// .

AIR QUALITY Table 1
Federal and State Ambient Air Quality Standards

Pollutant	Averaging Time	Federal Standard	California Standard
Ozone (O_3)	8 Hour	0.08 ppm (157 μg/m^3)	0.070 ppm (137 μg/m^3)
	1 Hour	—	0.09 ppm (180 μg/m^3)
Carbon Monoxide (CO)	8 Hour	9.0 ppm (10 mg/m^3)	9.0 ppm (10 mg/m^3)
	1 Hour	35.0 ppm (40 mg/m^3)	20.0 ppm (23 mg/m^3)
Nitrogen Dioxide (NO_2)	Annual	0.053 ppm (100 μg/m^3)	under review
	1 Hour	—	0.25 ppm (470 μg/m^3)
Sulfur Dioxide (SO_2)	Annual	0.030 ppm (80 μg/m^3)	—
	24 Hour	0.14 ppm (365 μg/m^3)	0.04 ppm (105 μg/m^3)
	3 Hour	0.5 ppm (1300 μg/m^3)	—
	1 Hour	—	0.25 ppm (655 μg/m^3)
Respirable Particulate Matter (PM10)	Annual	—	20.0 μg/m^3
	24 Hour	150.0 μg/m^3	50.0 μg/m^3
Fine Particulate Matter (PM2.5)	Annual	15.0 μg/m^3	12.0 μg/m^3
	24 Hour	35.0 μg/m^3	—
Sulfates (SO_4)	24 Hour	—	25.0 μg/m^3
Lead	30-Day Average	—	1.5 μg/m^3
	Calendar Quarter	1.5 μg/m^3	—
Hydrogen Sulfide (H_2S)	1 Hour	—	0.03 ppm (42 μg/m^3)
Vinyl Chloride (chloroethene)	24 Hour	—	0.01 ppm (26 μg/m^3)
Visibility Reducing Particulates	8 Hour	—	In sufficient amount to produce an extinction coefficient of 0.23 per kilometer due to particles when the relative humidity is less than 70 percent.

Source: Ex. 200, p. 4.1-5.

The U.S. Environmental Protection Agency (U.S. EPA), California Air Resources Board (ARB), and the local air district classify an area as attainment, unclassifiable, or nonattainment, depending on whether or not the monitored ambient air quality data show compliance, are insufficient, or show non-compliance with the ambient air quality standards, respectively. **AIR QUALITY Table 2** summarizes federal and state attainment status for criteria pollutants for Colusa County.

AIR QUALITY Table 2
Federal and State Attainment Status for Colusa County

Pollutant	Attainment Status	
	Federal	State
Ozone	Unclassifiable/Attainment [a]	Nonattainment-Transitional
CO	Unclassifiable/Attainment [a]	Unclassified
NO_2	Unclassifiable/Attainment [a]	Attainment
SO_2	Attainment	Attainment
PM10	Unclassifiable/Attainment [a]	Nonattainment
PM2.5	Unclassifiable/Attainment [a]	Unclassified

[a] Unclassified/Attainment – The attainment status for the subject pollutant is classified as either attainment or unclassified.
Source: Ex. 200, p. 4.1-6.

The proposed CGS is a nominal 660-megawatt (MW) natural gas-fired, combined cycle electric generating facility. The proposed major air emissions sources are:

- Two General Electric 7FA natural gas-fired combustion turbine generators (CTGs) with dry, low NOx combustors and inlet air evaporative coolers;
- Two heat recovery steam generators (HRSGs) each equipped with 688-MMBtu/hr duct burners;
- One diesel-fueled 1,340-horsepower emergency generator engine;
- One diesel-fueled 300-horsepower fire water pump; and
- One natural gas-fired auxiliary boiler with 44-MMBtu/hr heat input.

(Ex. 200, p. 4.1-17.)

Construction at the CGS project site is expected to occur over a period of 24 months, with off-site construction starting one month before project site construction. The CGS construction will consist of laydown and construction of the power plant buildings and switchyard. This includes the following major structures:

- Two CTGs and one steam turbine generator,
- Two HRSGs and stacks,
- Air-cooled condenser,
- Aqueous ammonia storage tank and piping,
- Fin-fanned cooler,
- Administration and control building,

- Water treatment building,
- Main transformer, suspension pole, and lattice tower,
- Two water storage tanks,
- Zero liquid discharge (ZLD) wastewater treatment system,
- Storm water collection system including a 2.5-acre detention basin,
- Auxiliary boiler and steam lines.

(Ex. 200, pp. 4.1-17 – 4.1-18.)

1. Linear and Off-Site Construction

The CGS will include the following linear and off-site improvements:

- Asphalt paved roadway approximately 2,700 feet in length and 30 feet in width,
- Twelve new transmission lattice towers, four on-site and eight off-site,
- Natural gas pipeline from the adjacent PG&E natural gas main, approximately 1,500 feet of 8-inch pipe,
- Water supply pipeline from the nearby Tehama-Colusa Canal, approximately 2,700 feet of 4-inch pipe,
- Widening of the Delevan and McDermott Roads intersection,
- Reconstruction of the existing Teresa Creek Bridge,
- Tehama-Colusa Canal Access Road.

(Ex. 200, p. 4.1-18):

The construction of these facilities will generate air emissions, primarily fugitive dust from earth moving activities and combustion emissions generated from the construction equipment and vehicles. The projected highest daily emissions, based on the highest monthly emissions over the 24 month construction activity, are shown in **AIR QUALITY Table 3**. The peak short-term emissions, particularly the peak PM10 and PM2.5 emissions, will occur for site grading and construction laydown activities, which are scheduled during months two through four of project construction.

AIR QUALITY Table 3
CGS Project Construction Emissions

Pollutant	Worst-Case Hour (lb/hr)	Worst-Case Month (lb/month)	Worst-Case Annual (tons/yr)
NOx	33.40	6,677.9	33.58
CO	17.10	3,420.1	17.68
VOC	5.40	1,071.3	5.53
SOx	0.03	6.0	0.03
Exhaust PM10	1.60	328.8	2.19
Fugitive PM10	15.30	3,056.6	7.27
Exhaust PM2.5	1.60	328.8	2.19
Fugitive PM2.5	3.20	635.8	1.51

Based on 10-hour day where the exhaust PM values correspond to the peak fugitive dust period and the fugitive dust PM2.5 was calculated using a PM2.5 to PM10 factor of 0.208 for construction.
Source: Ex. 200, p. 4.1-19.

For fugitive dust emission calculation, the Applicant utilized an uncontrolled emission factor of 0.11 tons of PM10 per month per acre, assuming a 90 percent control efficiency resulting from on-site mitigation measures, to estimate the fugitive dust emissions from the acres disturbed during construction. The Applicant also calculated fugitive dust emissions from specific on-site dirt pushing activities and unpaved on-site travel using U.S. EPA emission factor calculations. (Ex. 200, p. 4.1-19.)

2. Initial Commissioning Impacts on Air Quality

Initial commissioning refers to the time period between completion of construction and reliable production of electricity for sale on the market. For most power plants, operating emission limits usually do not apply during the initial commissioning procedures. During the initial testing phases of initial commissioning, the post-combustion controls systems such as selective catalytic reduction (SCR) and oxidation catalysts are generally not operational. The short-

term, worst-case, and entire initial commissioning period emissions estimated for each pollutant are presented in **AIR QUALITY Table 4**.

AIR QUALITY Table 4
Emissions from Initial Commissioning Activities

Pollutant	Turbine Load for Peak Emissions	Peak Emission Rate (lb/hr) [a]	Total Emissions for Commissioning (tons) [b]
NOx	50%	475.0	97.0
CO	25%	1,287.3	303.6
VOC	25%	47.1	13.1
SO_2	100% w/DB	7.4	0.6
PM10	100% w/DB	18.0	13.8

Peak hourly SO_2 corrected to 1.0 grain/100 standard cubic feet (SCF) natural gas sulfur content, and total corrected to 0.3 grain/100 SCF with duct burners (DB) operating.
[a] Emissions per turbine/HRSG.
[b] Emissions for both turbines/HRSGs.
Source: Ex. 200, p. 4.1-21.

3. Operational Emission Controls and Monitoring

NOx Controls

A SCR emission control system including catalyst and ammonia injection system is proposed for installation on the two HRSGs. In addition, the CTGs will be equipped with a Dry Low NOx Combustion System (DLN).The combined DLN and SCR systems will limit exhaust concentrations of NOx, which will be reduced to 2.0 parts per million by volume, dry (ppmvd) at 15 percent O_2. Stack emissions of ammonia from the SCR system (ammonia slip) will be limited to five ppmvd at 15 percent O_2. (Ex. 200, p. 4.1-21.)

The auxiliary boiler will be limited to 15 ppmvd NOx at 15 percent O_2. The emergency generator engine and the firewater pump engine will meet the latest U.S. EPA/ARB diesel engine standards. (*id.*)

CO and VOC Controls

Installation of an oxidation catalyst is proposed for the two HRSGs to limit CO emissions to three ppmvd and VOC emissions to two ppmvd at 3 percent O_2. As

noted above, the auxiliary boiler will meet specific emission limits. In the case of CO and VOC emissions, these limits are 50 and 10 ppmvd, respectively, at 3 percent O2. As also noted above, the two diesel engines will meet appropriate EPA/ARB Tier standards, which will also control CO and VOC emissions.

PM and SO_2 Controls

The exclusive use of pipeline-quality natural gas, a relatively clean-burning fuel, will limit the formation of PM and SO_2 emissions from the turbine/HRSGs and auxiliary boiler. Natural gas contains very little non-combustible gas or solid residues and only a small amount of reduced sulfur compounds, thus resulting in relatively low emissions of the above-mentioned pollutants. It is assumed for emission calculations purposes that the short-term maximum natural gas sulfur content is 1.0 grains/100 SCF, while the long-term or annual average sulfur content is 0.3 grains/100 SCF. This is a revision from the 0.2 grains/100 SCF used by the Applicant in the AFC. (Ex. 200, p. 4.1-22.)

In addition to meeting appropriate EPA/ARB Tier standards, which will also control PM emissions, the exclusive use of ultra-low sulfur (15 ppm by weight) diesel fuel will control their SO_2 emissions. (*id.*)

Emission Monitoring

Continuous emission monitors (CEMs) will be installed to measure NOx, CO, and O_2 emissions to assure adherence with the proposed turbine/HRSG emission limits. The CEM system will generate reports of emissions data in accordance with permit requirements and will send alarm signals to the plant's control room when the level of emissions approaches or exceeds pre-selected limits. (*id.*)

4. Project Operating Emissions

The CGS will emit NO_x, CO, VOC (volatile organic compounds), SO_x, and PM_{10}. The emissions will vary depending on the activity being conducted. The operational activities of CGS include startup of the power plant and nominal and

maximum operation of the power plant. The estimated emissions from each activity are discussed below.

5. Startup/Shutdown

Startup and shutdown events typically have higher NOx, CO, and VOC emission rates than full load operations. The expected emission rates during startup and the required time for each activity are summarized in **AIR QUALITY Table 5**. Emissions of SOx and PM10 are a function of the quantity of fuel burned. Since fuel consumption will be less during start-up and shutdown than at full load duct firing operation, emissions of these pollutants are equal to or less than the emission rates shown for normal operations in **AIR QUALITY Table 6**.

AIR QUALITY Table 5
Startup and Shutdown Emission Estimates

Startup/Shutdown Type	Timeframe	NOx	CO	VOC	SO_2	PM10
Cold Startup (270 min)	lb/hr/CT	333.3	373.6	27.7	1.80	12.0
	lb/event/CT	779.1	1,355.6	106.7	4.56	48.8
Warm Startup (180 min)	lb/hr/CT	152.0	370.3	27.7	1.80	12.0
	lb/event/CT	456.2	790.5	47.4	2.61	30.8
Hot Startup (90 min)	lb/hr/CT	249.9	429.6	27.7	1.80	12.0
	lb/event/CT	259.9	679.6	38.0	1.50	12.8
Shutdown (30 min)	lb/hr/CT	115.0	483.5	23.9	0.90	6.0
	lb/event/CT	115.0	483.5	23.9	0.90	6.0

Source: Ex. 200, p. 4.1-23.

6. Normal Operating Emissions

Operating emissions from two gas turbine/HRSGs were estimated using base case emission rates and emissions from startup and shutdown. They are shown in **AIR QUALITY Table 6**.

AIR QUALITY Table 6

Normal Hourly Emissions for the CGS Turbines/HRSGs

Operating Load and Temperature	Two Turbine/HRSG Pollutant Emission Rates (lb/hr)					
	NOx	CO	VOC	SOx	PM10	NH_3
50% Load, 18°F	19.4	17.8	4.4	7.1	25.2	18.0
50% Load, 59°F	18.2	16.6	4.2	6.6	25.0	16.8
50% Load, 114°F	17.2	15.6	4.2	6.3	25.0	15.8
75% Load, 18°F	24.6	22.6	5.4	8.9	25.4	22.8
75% Load, 59°F	23.0	21.0	5.0	8.3	25.4	21.2
75% Load, 114°F	22.0	20.0	5.0	7.9	25.2	20.4
100% Load, 18°F (no DB)	30.6	28.0	6.8	11.0	25.8	28.4
100% Load, 59°F (no DB)	28.4	26.0	6.2	10.2	25.6	26.2
100% Load, 114°F (no DB)	27.0	24.6	6.0	9.7	25.6	25.0
100% Load, 18°F (w/DB)	41.4	37.8	14.4	14.8	40.0	38.4
100% Load, 59°F (w/DB)	39.2	35.8	13.6	14.0	39.8	36.4
100% Load, 114°F (w/DB)	38.0	34.8	13.2	13.6	40.2	35.2

Source: Ex. 200, p. 4.1-23.

Maximum Expected Emissions

Maximum operating emissions from the turbines are based on short-term, worst-case emissions from both turbines. The worst-case operating conditions for each criteria pollutant are pollutant specific. PM10 and SOx emissions are directly proportional to fuel usage; therefore, worst case emissions are at 100 percent load with duct burners operating. For other pollutants, the worst-case operating condition is during startups or shutdown. The worst-case scenario for each pollutant is given in **AIR QUALITY Table 7**. Maximum operating emissions from the turbines as modeled for impact analysis purposes are presented in **AIR QUALITY Table 8**.

AIR QUALITY Table 7

Worst Case Operating Conditions for Each Criteria Pollutant

1-Hour Emissions	NOx, CO	Cold startup
	CO	Shutdown
	VOC	Startup – any kind
	PM10, SO_2	100% load with duct burners operating at 114°F and 18°F
3-Hour Emissions	SO_2	100% load with duct burners operating at 18°F
8-Hour Emissions	CO	6 hours of startup and shutdown with the balance at 100% load with duct burners operating at 18°F
24-Hour Emissions	NOx, CO, VOC	6 hours of startup and shutdown with the balance at 100% load with duct burners operating at 18°F
	PM10, SO_2	100% load with duct burners operating at 114°F and 18°F

Source: Ex. 200, p. 4.1-25.

AIR QUALITY Table 8
Maximum Short-Term Emissions for Both Turbines

	Units	NOx	CO	VOC	SOx	PM10
1-Hour	(lb/hr)	666.6	967.0	55.4	14.8	40.2
3-Hour	(lb/3 hrs)	--	--	--	44.4	--
8-Hour	(lb/8 hrs)	--	7,054.2	--	--	--
24-Hour	(lb/day)	2,994.6	7,659.0	630.6	355.2	964.8

Source: Ex. 200, p. 4.1-25.

Auxiliary Equipment Emissions

CGS has an auxiliary boiler, an emergency generator engine, and an emergency firewater pump engine. The auxiliary boiler is used to maintain turbine seals and provide steam to the air cooled condenser steam jet air injectors during shutdown, facilitate startup, and include capacity to operate the zero liquid discharge system. The requested maximum hours of operation for the auxiliary boiler are 3,744 hours per year. The non-emergency operation of the emergency generator and firewater pump will be limited to 50 hours of testing per year. Emissions from the auxiliary equipment are presented in **AIR QUALITY Table 9**.

AIR QUALITY Table 9
Annual Emissions from Auxiliary Equipment

	NOx		CO		VOC		SOx		PM10	
Equipment	**(lb/hr)**	**(ton/yr)**	**(lb/hr)**	**(ton/yr)**	**(lb/hr)**	**(ton/yr)**	**(lb/hr)**	**(ton/yr)**	**(lb/hr)**	**(ton/yr)**
Auxiliary Boiler	0.79	1.48	1.61	3.01	0.18	0.10	0.13	0.07	0.33	0.62
Emergency Gen.	13.90	0.35	0.32	0.008	0.15	0.004	0.01	0.003	0.09	0.002
Firewater Pump	1.98	0.05	0.22	0.006	a	A	<0.01	0.003	0.08	0.002

a – Included in Tier 3 NOx emission limit, which is specified as non-methane hydrocarbons (NMHC) + NOx.
Source: Ex. 200, p. 4.1-26.

Total Facility Emissions

The total quarterly and annual emission levels for both gas turbine/HRSGs and auxiliary equipment are provided in **AIR QUALITY Table 10**. Actual operating conditions at the CGS will vary, but will not exceed these quarterly and annual emission levels.

AIR QUALITY Table 10
Criteria Pollutant Quarterly and Annual Emissions for CGS

Period	Units	NOx	CO	VOC	SOx	PM10
1st Quarter	(ton/qtr)	45.60	54.20	12.36	4.05	35.29
2nd Quarter	(ton/qtr)	43.62	52.40	11.69	3.83	35.39
3rd Quarter	(ton/qtr)	51.34	107.06	11.90	3.87	35.70
4th Quarter	(ton/qtr)	44.31	53.86	11.82	3.87	35.69
Annual	(ton/yr)	184.87	267.52	47.77	15.62	142.08

Source: Ex. 200, p. 4.1-26.

Ammonia Emissions

The Applicant has estimated that the maximum ammonia slip emissions for both turbines will be 38.4 pounds/hour. (Ex. 8, p. 8.1-44.)

7. Assessment of Impacts and Discussion of Mitigation

We assess three kinds of impacts: construction, operation, and cumulative effects. Construction impacts result from the emissions that occur during construction of the project. Operation impacts result from the operating emissions of the proposed project over the proposed lifetime of the project. Cumulative effects analysis assesses the impacts that result from the proposed project's incremental effect together with other closely related past and present projects and those reasonably foreseeable future projects, whose impacts may compound or increase the incremental effect of the proposed project. Cumulative impacts are also assessed in terms of conformance with the District's attainment or maintenance plans.

Staff used two main significance criteria in evaluating this project. First, all project emissions of non-attainment criteria pollutants and their precursors (NOx, VOC, PM10, and SO_2) are considered significant and must be mitigated. Second, any ambient air quality standard (AAQS) violation or any contribution to any AAQS violation caused by any project emissions is considered to be significant and must be mitigated. For construction emissions, the mitigation that is considered is

limited to controlling both construction equipment tailpipe emissions and fugitive dust emissions to the maximum extent feasible. For operating emissions, the mitigation includes both feasible emission controls (BACT) and the use of emission reduction credits to offset emissions of non-attainment criteria pollutants and their precursors.

The ambient air quality standards used as a basis for determining project significance are health-based standards established by the ARB and U.S. EPA. They are set at levels adequate to protect the health of all members of the public, including those most sensitive to adverse air quality impacts such as the aged, people with existing illnesses, children, and infants, including a margin of safety.

8. Construction Impacts and Mitigation

The following section discusses the project's short-term direct construction ambient air quality impacts, as estimated by the Applicant, and provides a discussion of appropriate mitigation. Staff reviewed the construction emissions estimates and air dispersion modeling procedures and considers them to be adequate for impact determination and generally conservative for this siting case.

Construction Impact Analysis

As can be seen from the modeling results provided in **AIR QUALITY Table 11**, the construction impacts of PM10 and PM2.5 (24-hour and annual) exceed the ambient air quality standards and are, therefore, potentially significant. The Applicant's construction modeling analysis indicates that the maximum NOx, CO, and SO_2 impacts will remain below the California ambient air quality standards (CAAQS) and national ambient air quality standards (NAAQS).

AIR QUALITY Table 11
CGS Construction Impacts (μg/m³)*

Pollutant	Averaging Period	Project Impact (μg/m³)	Background (μg/m³)	Total Impact (μg/m³)	Limiting Standard (μg/m³)	Type of Standard	Percent of Standard
NO_2	1 hour	120.3	131.6	251.9	470	CAAQS	54
	annual	6.3	22.6	28.9	100	NAAQS	29
PM10	24hour	332.6	92.0	424.6	50	CAAQS	849
	annual	3.3	25.5	28.8	20	CAAQS	144
PM2.5	24 hour	26.6	27.0	53.6	35	NAAQS	150
	Annual	0.61	11.2	11.8	12	CAAQS	98
CO	1 hour	1354.7	6,670.0	8,025.0	23,000	CAAQS	35
	8 hour	190.0	3,778.0	3,968.0	10,000	CAAQS	40
SO_2	1 hour	2.1	47.2	49.3	655	CAAQS	8
	3 hour	0.69	42.5	43.2	1,300	NAAQS	3
	24 hour	0.10	7.1	7.2	105	CAAQS	7
	Annual	0.008	2.7	2.7	80	NAAQS	3

* Micrograms per cubic meter.
Source: Ex. 200, p. 4.1-29.

The Applicant's modeling procedures, specifically the use of area sources to model the fugitive dust emissions, greatly overestimate the PM10 and PM2.5 impacts at fence line. Therefore, we find that the construction PM2.5 impacts, after the mitigation proposed by the Applicant, will not cause a new exceedance of the 24-hour standard; however, the PM10 impacts remain potentially significant and would require all feasible mitigation measures.

Construction Mitigation

Due to the potentially significant PM10 impacts from construction, we require that construction emission impacts be mitigated to the greatest feasible extent.

Applicant's Proposed Mitigation

The Applicant has proposed, and we require, the implementation of the following measures to reduce emissions during construction activities. (Ex. 8, pp. 8.1-29, 30.)

- Water unpaved roads and disturbed areas frequently (at least twice a day).
- Limit speed of vehicles on the construction areas to no more than 10 miles per hour.

- Post visible speed limit signs at construction site entrance.
- Sweep paved internal roads after the evening peak period.
- Increase frequency of watering when wind speeds exceed 15 miles per hour.
- Employ tire washing and gravel ramps prior to entering a public roadway to limit deposits of accumulated mud and dirt on the roads.
- Treat the entrance roadways to the construction site with soil stabilization compounds.
- Place sandbags adjacent to roadways to prevent runoff to public roadways.
- Install windbreaks at the windward sides on construction areas prior to the soil being disturbed. The windbreaks shall remain in place until the soil is stabilized or permanently covered.
- Employ dust sweeping vehicles at least twice a day to sweep at least the first 500 feet of public roadways that are used by construction and worker vehicles.
- Sweep newly paved roads at least twice weekly.
- Replace ground cover in disturbed areas as quickly as possible.
- Cover all trucks hauling dirt, sand, soil, or other loose materials and maintain a minimum of six inches of freeboard between the top of the load and the top of the trailer.
- Apply covers or dust suppressants to soil storage piles and disturbed areas that remain inactive for more than two weeks.
- Pre-wet the soil to be excavated during construction.
- Designate a person to oversee the implementation of the fugitive dust control program.

Applicant-proposed heavy diesel construction equipment exhaust emission control measures include:

- All diesel-fueled engines used for construction of the facility shall be fueled only with ultra-low sulfur diesel which contains no more than 15 ppm sulfur.
- All diesel-fueled engines used in the construction shall have clearly visible tags showing that the engine meets the conditions set forth in this program.
- All construction diesel engines rated at 100 horsepower or above shall meet at least the California Tier 2 Emissions Standards. If a Tier 2 engine is not available, a Tier 1 engine shall be provided. In the case that no Tier 1 engine is available for a particular application, the engine shall be equipped with a catalyzed diesel particulate filter (soot filter), unless the use of a soot filter is certified as not practical by the engine manufacturer.

- All earthmoving equipment and heavy-duty construction-related trucks shall be properly maintained and the engines tuned to the manufacturer's specifications.
- Diesel heavy construction equipment shall not remain running at idle for more than five minutes, to the extent practical.
- All equipment idle times shall be limited to no more than 15 minutes.
- Electric motors shall be employed for construction equipment when feasible.

Adequacy of Proposed Mitigation

The Applicant's proposed construction emissions mitigation measures are substantial. However, the Applicant's revised PM10 emission estimate assumes a very aggressive 90-percent control efficiency factor for fugitive dust, which may be overly optimistic. All reasonably feasible construction emission mitigation measures, including some not already proposed by the Applicant, are needed to mitigate the potentially significant construction PM10 impacts.

Required Additional Mitigation

The Applicant shall implement construction PM10 and NOx emission mitigation measures that include both the mitigation measures proposed by the Applicant and additional mitigation measures and compliance assurance measures in Conditions of Certification **AQ-SC1** through **AQ-SC5**.

Based on the relatively short-term nature of the worst-case construction impacts, the distance to sensitive receptors, and the required implementation of all reasonably feasible construction emission mitigation measures, we find that the construction air quality impacts will be less than significant.

9. Operation Impacts and Mitigation

The following section discusses the project's direct ambient air quality impacts, as estimated by the Applicant and evaluated by Staff, and the required mitigation measures.

Operational Modeling Analysis

A refined modeling analysis was performed to identify off-site criteria pollutant impacts from operational emissions of the proposed project. Turbine emission rates were first calculated from equipment vendor estimates for 12 load conditions:

- Four load cases: 50 percent load, 75 percent load, 100 percent load, and 100 percent load with duct firing.
- Each load case was evaluated at three different ambient conditions: winter minimum, yearly average, and summer maximum.

These conditions were then modeled to determine the worst-case, short- term conditions, the assumptions to be used for the quarterly emission estimates, and the stack parameters to be used in the modeling analysis. The Applicant's predicted maximum concentrations of the non-reactive pollutants for the CGS are summarized below in **AIR QUALITY Table 12.**

AIR QUALITY Table 12
CGS Normal Operating Impacts (μg/m^3)

Pollutant	Averaging Period	Project Impact (μg/m^3)	Background (μg/m^3)	Total Impact (μg/m^3)	Limiting Standard (μg/m^3)	Type of Standard	Percent of Standard
NO_2	1 hour	40.10	131.6	171.7	470	CAAQS	37
	annual	0.64	22.6	23.2	100	NAAQS	23
PM10	24 hour	6.10	92.0	98.1	50	CAAQS	196
	annual	0.51	25.5	26.0	20	CAAQS	130
PM2.5	24 hour	2.73	27.0	29.7	35	NAAQS	82
	annual	0.51	11.2	11.7	12	CAAQS	98
CO	1 hour	1,395.80	6,670.0	8,066.0	23,000	CAAQS	35
	8 hour	293.10	3,778.0	4,071.0	10,000	CAAQS	41
SO_2	1 hour	20.33	47.2	67.5	655	CAAQS	10
	3 hour	8.58	42.5	51.1	1,300	NAAQS	4
	24 hour	1.62	7.1	8.7	105	CAAQS	8
	annual	0.04	2.7	2.7	80	NAAQS	3

Source: Ex. 200, p. 4.1-33.

The Applicant's modeling results indicate that the project's normal operational impacts would not create violations of NO_2, SO_2, CO, or PM2.5 standards, but could further exacerbate existing violations of the PM10 standards. In light of the

existing PM10 and PM2.5 non-attainment status for the project site area, we find that the modeled impacts are significant and require mitigation.

Fumigation Modeling Impact Analysis

During the early morning hours before sunrise, the air is usually very stable. During such meteorological conditions, emissions from elevated stacks rise through this stable layer and are dispersed. When the sun first rises, the air at ground level is heated, resulting in a vertical (both rising and sinking air) mixing of air for approximately a few hundred feet. Emissions from a stack that enter this vertically mixed layer of air will also be vertically mixed, bringing some of those emissions down to the ground level. Later in the day, as the sun continues to heat the ground, this vertical mixing layer rises higher and higher, and the emissions plume becomes better dispersed. The early morning pollution event, called fumigation, usually lasts approximately 30 to 90 minutes. There is the potential for higher short-term concentrations to occur during such conditions.

Fumigation conditions are generally only compared to one-hour standards. The Applicant analyzed the maximum one-hour air quality impacts under fumigation conditions from the project using the SCREEN3 model. (Ex. 8, p. 8.1-51.) The results of the analysis, as shown in **AIR QUALITY Table 13**, indicate that the fumigation impacts would be lower than the maximum normal operating emission impacts.

AIR QUALITY Table 13
Maximum CGS Fumigation Impacts (μg/m^3)

Pollutant	Averaging Period	Project Impact (μg/m^3)	Background (μg/m^3)	Total Impact (μg/m^3)	Limiting Standard (μg/m^3)	Type of Standard	Percent of Standard
NO_2	one hour	3.09	131.6	134.7	470	CAAQS	29
CO	one hour	2.82	6,670.0	6,673.0	23,000	CAAQS	29
SO_2	one hour	1.16	47.2	48.4	655	CAAQS	7

Source: Ex. 8, p. 8.1-51.

Maximum fumigation impacts for the turbines were predicted to occur about 16 kilometers (km) from the facility. The impacts under fumigation conditions have been determined to be lower than the maximum concentrations calculated by AERMOD in complex terrain. This is due to the gas turbine/HRSG stack temperatures which reduce the potential for fumigation and the fact that the SCREEN3 fumigation modeling does not consider elevated terrain.

Startup Modeling Impact Analysis

The Applicant modeled facility impacts during the startup of the new turbines/HRSGs along with operation of the auxiliary boiler. Emissions rates for this scenario were based on requested permitted NOx and CO emission rates during startup (see **AIR QUALITY Table 5**). Startup impacts were evaluated using the AERMOD model, and NOx impacts were determined using the NOx OLM modeling option. As shown in **AIR QUALITY Table 14**, the worst-case emissions would not cause an exceedance of the one-hour NO_2 standard or the one-hour and eight-hour CO standards. Therefore, the modeling results indicate that the startup emissions do not have the potential to cause significant short-term ambient air quality impacts.

AIR Quality Table 14
CGS Startup Worst-Case Short-Term Impacts, (μg/m^3)

Pollutant	Averaging Period	Project Impact (μg/m^3)	Background (μg/m^3)	Total Impact (μg/m^3)	Limiting Standard (μg/m^3)	Type of Standard	Percent of Standard
NO_2	one hour	329.7	131.6	461.3	470	CAAQS	98
CO	one hour	1,395.8	6,670.0	8,066.0	23,000	CAAQS	35
CO	eight hour	293.1	3,778.0	4,071.0	10,000	CAAQS	41

Source: Ex. 200, p. 4.1-34.

Commissioning Modeling Impact Analysis

The Applicant evaluated nine separate initial commissioning activities that would occur prior to meeting normal emission limits. The worst case conditions for the short-term NOx and CO impacts were determined and modeled. The Applicant

has committed to commissioning one turbine at a time prior to installation of the emission control systems and has modeled the impacts considering that only one turbine is operating at the worst-case initial commissioning conditions.

The AERMOD model was used for the modeling analysis, and the NOx OLM option was used for the one-hour NOx modeling. As shown in **AIR QUALITY Table 15**, the worst-case emissions would not cause an exceedance of the one-hour NO_2 standard or the one-hour and eight-hour CO standards. Therefore, the modeling results indicate that the commissioning emissions do not have the potential to cause significant short-term ambient air quality impacts.

AIR QUALITY Table 15
Maximum CGS Initial Commissioning Impacts

Pollutant	Averaging Period	Project Impact ($\mu g/m^3$)	Background ($\mu g/m^3$)	Total Impact ($\mu g/m^3$)	Limiting Standard ($\mu g/m^3$)	Type of Standard	Percent of Standard
NO_2	one hour	197.0	131.6	328.6	470	CAAQS	70
CO	one hour	2,504.0	6,670.0	9,174.0	23,000	CAAQS	40
	eight hour	888.0	3,778.0	4,666.0	10,000	CAAQS	47

Source: Ex. 200, p. 4.1-35 .

Class I Area Impacts

A criteria pollutant, visibility, and air quality related values (AQRV) analysis of a project's operating emissions impacts to Class 1 areas is required under the federal Prevention of Significant Deterioration (PSD) permitting program. The analysis provided by the Applicant showed that the only Class 1 PSD area (which pertains to national parks and national wildlife refuges) located within the 100-kilometer distance prescribed in the PSD regulation is the Yolla Bolly-Middle Eel Wilderness approximately 88 km northwest of the proposed project site. The Applicant provided a modeling analysis which showed that the impacts for CGS are well below all of the Class 1 area impact criteria. (Ex. 8, Table 8.1-26, p. 8.1-51; Ex. 47, Table 6-4, p. 6-7.)

The Applicant provided an assessment of the potential changes to visibility and of nitrogen and sulfur deposition which showed that visibility passed all screening

criteria and that the project's total sulfur and nitrogen deposition values were well below the United States Forest Service prescribed values. (Ex. 8, p. 8.1-13 and Table 8.1-27, p. 8.1-52.) We find that the potential air visibility and deposition impacts to Class 1 PSD areas from the exhaust emissions of the project are less than significant.

Impacts to Emerald Farms

Emerald Farms, an Intervenor in this siting case, has significant and sensitive farming operations located near the proposed power plant project site. The Applicant provided an analysis regarding the concerns noted by Emerald Farms in its petition to intervene, including air quality impacts to area farming operations. (Ex. 55.) The Applicant's analysis focused on the impacts of ozone pollution and other criteria and air toxics impacts from the CGS plant operation. The general findings of the Applicant's analysis--that the project should not cause significant increases in ozone pollution or otherwise increase ground level pollutants in a manner that would significantly impact Emerald Farms, or other local farming operations—are uncontroverted.

Emerald farms also raised the issue of potential crop damage from sulfur emissions, stating both that their farming operations include crops that are sensitive to sulfur emissions (SO_2) and that their crops are being damaged by the existing PG&E Delevan Compressor Station gas turbines. Recognition of Air Pollution Injury to Vegetation (Flagler, 1998), cited by Emerald Farms, indicates that there are many factors that can mimic SO_2 damage, such as damage from salt, anhydrous ammonia, and various pests and parasites. Further, it is uncontroverted that project SO_2 emissions will be below any LORS requirements. Therefore we find that the crop damage claimed by Emerald Farms is probably being caused by factors other than SO_2 emissions from the Delevan compressors and further find that the proposed CGS SO_2 emissions will not have any significant impacts to local crops.

There is potential for crop damage caused by particulate fallout. The Applicant has proposed extensive particulate emissions controls to mitigate fugitive dust emissions that Staff has formalized and augmented in Conditions of Certification **AQ-SC1** to **AQ-SC5**; we find that these measures will adequately control particulate emissions during construction.

10. Operations Mitigation

Emission Controls

The Applicant proposes to employ DLN, SCR with ammonia injection, and an oxidation catalyst, and to operate exclusively on pipeline-quality natural gas to limit turbine emission levels. The auxiliary boiler will use BACT. The emergency engines will meet the most recent ARB/U.S. EPA engine standards. (Ex. 51, DR 27.)

Emission Offsets

District Rule 3.6 requires that the Applicant provide emission offsets, in the form of banked Emission Reduction Credits (ERC) for the project's emissions exceeding the CCAPCD offset threshold of 25 tons per year. The CGS would require offsets for NOx, VOC, and PM10 based on District Rule 3.6. **AIR QUALITY Table 16** shows the summary of the emission liabilities that need to be offset under Rule 3.6 requirements.

AIR QUALITY Table 16
CGS District Offset Requirements (lb/year)

	NOx	VOC	PM10	SO_2	CO [a]
CGS Emissions	369,736.3	95,534.1	284,154.7	31,233.7	535,049.3
Offset Threshold	50,000	50,000	50,000	50,000	50,000
Offsets Triggered?	**Yes**	**Yes**	**Yes**	**No**	**No**

Source: Ex. 200, p. 4.1-38.

All air pollutant offsets provided for the project, by rule, are estimated on a quarterly basis. The Applicant is proposing over 20 different sources of ERCs to mitigate the project's potential emissions. Two of these ERC sources are stationary source shutdowns, and 20 are agricultural burning cessation ERCs.

The Appendix to the Air Quality Conditions of Certification in this Decision provides a complete listing of all of the ERC sources proposed by the Applicant, and for the agricultural burning cessation ERCs, identifies the specific crops associated with the burning cessation.

For this project the District's offset requirements would meet or exceed the Energy Commission's minimum offsetting goal of a 1:1 ratio of annual operating emissions for all pollutants other than VOC and SO_2. The Applicant has proposed to provide VOC and SO_2 emission reduction credits to offset the permitted annual emissions at a 1:1 ratio. The Applicant has demonstrated, per District requirements and Energy Commission policy, that it owns ERCs in quantities sufficient to offset the project's NOx, VOC, PM10, and SO_2 emissions. A brief discussion of each category of ERC's follows.

NOx Emission Offsets

The Applicant has proposed the use of VOC-for-NOx interpollutant offsets. VOC and NOx are accepted as the principle precursors of ozone, and through a set of complex reactions these pollutants form ground level ozone. Reductions in either VOC or NOX pollution can reduce ozone formation. Therefore, interpollutant offsets VOC-for-NOx and NOx-for-VOC can be used to reach the goal of mitigating a project's impacts to ozone formation. The key issue is the determination of an appropriate interpollutant offset ratio, which depends on the ambient amounts of VOC and NOx emissions and general air chemistry of the area in question. The interpollutant ratio proposed by the Applicant (1.4:1) is primarily based on the methods of a study conducted for the San Francisco Bay Area. (Ex. 51, DR 10.) Even using the emissions within the greater Sacramento Valley air basin would predict a VOC-for-NOx interpollutant offset ratio of less than 1.4:1.

The Air Resources Board has challenged VOC-for-NOx interpollutant offsets for this project but has not supported its challenge with information that would fully explain and substantiate its position. The Applicant appears to be in compliance

with the District's NOx offset requirements and is providing ERCs at a total offset ratio of greater than the Commission-required 1:1 for the CGS project. We therefore find that this offset proposal satisfies CEQA mitigation requirements and accept the proposed VOC-for-NOx interpollutant ratio, which has been accepted by the CCAPCD in its FDOC. (Ex. 201.)

VOC Emission Offsets

The evidence shows that the Applicant is in compliance with the District's VOC offset requirements; however, the District's offset requirements are less than the Commission's required total offset ratio of 1:1. Therefore, we are imposing a requirement that the VOC ERCs provided meet a minimum of a 1:1 ratio in the Conditions of Certification. We find that this offset proposal, as mitigated, satisfies CEQA mitigation requirements.

PM10 Emission Offsets

The evidence shows that the Applicant is in compliance with the District's PM10 offset requirements and is providing PM10 ERCs at a greater than 1:1 total offset ratio for the CGS project.

The District does not specifically require the offsetting of PM2.5 emissions or require PM10 ERCs to break out their PM2.5 fractions. The PM emissions from the CGS are controlled combustion emissions and are therefore predominantly PM2.5. Therefore, we find that most of the ERCs being used to offset the PM10 emissions are also PM2.5 emission reductions and will provide a minimum 1:1 offset ratio for the project's PM2.5 emissions.

SO_2 Emission Offsets

The Applicant is not required by the District to provide SO_2 offsets, but is proposing to offset annual SO_2 emissions per Commission mitigation requirements. The offset proposal exceeds the quarterly emissions in every quarter except the third quarter. However, this third quarter deficit would be adequately covered by providing the necessary additional 731.6 pounds of SO_2

ERCs using an ERC certificate from any combination of calendar quarters. Therefore, we find that this offset proposal, as recommended to be adjusted by Staff, satisfies CEQA mitigation requirements.

Adequacy of Proposed Mitigation

The District has determined that the project's proposed emission controls/emission levels meet BACT requirements and that the proposed emission levels are reduced to the lowest technically feasible levels. This, coupled with Staff's determination that the proposed emission controls and emission levels and the proposed emission offset package mitigate all project impacts to less than significant, provide substantial support for our determination that the Applicant's offset proposal meets CEQA mitigation requirements.

11. Cumulative Impacts

"Cumulative impacts" are defined as "two or more individual effects which, when considered together, are considerable or . . . compound or increase other environmental impacts. . . A cumulative impact consists of an impact that is created as a result of a combination of the project evaluated in the EIR together with other projects causing related impacts." (CEQA Guidelines §§ 15355 and 15130[a][1].) Such impacts may be relatively minor and incremental, yet still be significant because of the existing environmental background, particularly when one considers other closely related past and present projects as well as those in the reasonably foreseeable future.

Much of the preceding discussion is concerned with cumulative impacts; air quality measurement, by its very nature, involves measuring pollutants accumulated from many sources.

The Colusa County Air Pollution Control District (CCAPCD) is the agency with principle responsibility for analyzing and addressing cumulative air quality impacts, including the impacts of ambient ozone and particulate matter. Colusa

County is currently designated either as attainment or unclassifiable with respect to the federal ambient air quality standards; therefore the District is not required to have a federal Air Quality Management Plan. Colusa County Air Pollution Control has jointly developed an Air Quality Attainment Plan (AQAP) for the Northern Sacramento Valley Air Basin (NSVAB) to deal with state ambient air quality attainment. This plan includes certain stationary source, area source, and transportation control measures (TCMs). These plans are updated roughly every three years and the most recently adopted plan is the 2003 AQAP. (Ex. 200, p. 4.1-44.) Since the project will comply with all existing emission control LORS and will fully offset all non-attainment pollutant and precursor emissions, we find that the project will not conflict with the District's AQAP.

Localized Cumulative Impacts

The power plant's localized cumulative impacts can be estimated through air dispersion modeling. The modeling results are added to the background ambient air quality monitoring data to determine the cumulative project emission impacts. The necessity and extent of mitigation can then be determined.

The cumulative assessment for the CGS includes the adjacent PG&E Delevan Compressor Station gas turbines, the only other nearby industrial emission source, to ensure that there are no significant localized impacts due to the proximity of these two major sources. The results of this cumulative modeling effort, **AIR QUALITY Table 17**, show that the CGS along with the PG&E Delevan Compressor Station will contribute slightly to existing violations of the PM10 AAQS standards.

AIR QUALITY Table 17
Cumulative Impacts Modeling Results (ug/m^3)

Pollutant	Averaging Time	Maximum Modeled Concentration (ug/m^3)	Background (ug/m^3)	Total Impact (ug/m^3)	Limiting AAQS (ug/m^3)	Percent of Limiting Standard
NO_2	1 Hour	332.80	125.98	**458.79**	470	**98**
	Annual	1.23	22.6	23.8	100	24
CO	1 Hour	952.36	6,670.0	7,622.0	23,000	33
	8 Hour	172.66	3,778.0	3,951.0	10,000	40
PM10	24 Hour	4.78	**92.0**	**96.8**	50	**194**
	Annual	0.51	**25.5**	**26.0**	20	**130**
PM2.5	24 Hour	2.59	27.0	29.6	35	85
	Annual	0.51	11.2	11.7	12	98
SO_2	1 Hour	14.17	47.2	61.4	655	9
	3 Hour	8.30	42.5	50.8	1300	4
	24 Hour	1.81	7.1	8.9	105	8
	Annual	0.04	2.7	2.7	80	3

Source: Ex. 200, p. 4.1-47.

However, determination of cumulative impact requires taking into account the proposed project's incremental effect together with other closely related past, present, and reasonably foreseeable future projects whose impacts may compound or significantly increase the incremental effect of the proposed project. We find that the CGS would not have a significant cumulative impact. The project's slight impact on existing PM10 violations is not sufficient to support a finding of significant cumulative impact.

12. Secondary Pollutant Impacts

Ozone and PM2.5 Impacts

The project's gaseous emissions of NOx, SO_2, VOC, and ammonia can contribute to the formation of secondary pollutants ozone and PM10/PM2.5.

The Applicant is proposing to mitigate the project's NOx, VOC, SO_2, and PM10 emissions through the use of emission offsets and to limit the ammonia slip emissions to 5 ppm. The NOx, VOC, SO_2, and PM10 offsets are proposed by the Applicant to be provided at a minimum 1:1 ratio and will be higher than 1:1 for

PM10 and NOx as required by District rules. With the proposed emission offsets, we find that the project will not cause significant secondary pollutant impacts.

Greenhouse Gases

The generation of electricity can produce air emissions known as greenhouse gases in addition to the criteria air pollutants. Greenhouse gases are known to contribute to the warming of the earth's atmosphere. These include primarily carbon dioxide, nitrous oxide (N_2O, not NO or NO_2, which are commonly known as NOx or oxides of nitrogen), and methane (unburned natural gas). Also included are sulfur hexafluoride (SF_6), hydrofluorocarbons (HFCs), and perfluorocarbons (PFCs) from transformers and chillers.

Climate change from rising temperatures represents a risk to California's economy, public health, and environment. (Ex. 200, p. 4.1-49.) In 1998, the Commission identified a range of strategies to prepare for an uncertain climate future, including a need to account for the environmental impacts associated with energy production, planning, and procurement. (*id.*) In 2003, the Commission recommended that the state require reporting of greenhouse gas emissions as a condition of state licensing of new electric generating facilities (*id.*) Such reporting would be done in accordance with reporting protocols currently in place or that will be adopted with the implementation of new laws. The Intergovernmental Panel on Climate Change (IPCC), an international scientific body, has developed standard reporting protocols and methodologies for governments and agencies to follow in calculating GHG inventories. (*id.*)

The California Global Warming Solutions Act of 2006 (AB32) requires the ARB to adopt a statewide greenhouse gas emissions limit equivalent to the statewide GHG emissions levels in 1990 to be achieved by 2020. ARB has a mandate to adopt rules and regulations requiring the maximum technologically feasible and cost-effective GHG emission reductions.

The ARB was scheduled to adopt regulations requiring mandatory GHG emissions reporting and defining the statewide GHG emissions cap for 2020 by January 2008. ARB would adopt a plan by January 1, 2009, that would indicate how emission reductions would be achieved from significant sources of GHGs via regulations, market mechanisms, and other actions. Then, during 2009, ARB Staff would draft rule language to implement its plan and hold public workshops on each measure including market mechanisms. Strategies that the state might pursue for managing GHG emissions in California are identified in the California Climate Action Team's Report to the Governor. (*id.*)

The Electricity Greenhouse Gas Emission Standards Act (SB 1368) was also enacted in 2006, imposing a GHG or Environmental Performance Standard upon generation and contracts. At its January 25, 2007 meeting, the CPUC adopted an Emissions Performance Standard for the state's Investor Owned Utilities of 1,100 pounds (or 0.5 metric tons) CO_2 per megawatt-hour (MWh). The Emissions Performance Standard applies to base load power from new power plants, new investments in existing power plants, and new or renewed contracts with terms of five years or more, including contracts with power plants located outside of California. A similar performance standard is undergoing rulemaking by the CEC for the Publicly Owned Utilities.

We adopt condition of certification **AQ-SC8**, which requires the project owner to report the quantities of relevant greenhouse gases emitted as a result of electric power production. We find that **AQ-SC8**, with the reporting of GHG emissions, will enable the project to be consistent with the regulations and policies described above. The greenhouse gas emissions to be reported in condition of certification **AQ-SC8** are carbon dioxide, methane, nitrous oxide, sulfur hexafluoride, HFCs and PFCs emissions that are directly associated with the production and transmission of electric power.

13. Compliance with Laws, Ordinances, Regulations, and Standards

The Colusa County Air Pollution Control District's Final Determination of Compliance (FDOC) was published on June 11, 2007, and its addendum was published on June 29, 2007, showing compliance with all District rules and regulations had been demonstrated to the District's satisfaction. (Ex. 201.) The District's FDOC conditions are presented in the Conditions of Certification.

Commission Staff has considered minority populations in its analysis of air quality impacts. The minority populations (as identified in **Socioeconomics Figure 1**) are well below 50 percent, which indicates that the site area would not have the potential for local environmental justice issues. Additionally, no potential significant adverse impacts have been identified, and therefore, there are no environmental justice issues.

The District is responsible for issuing the federal New Source Review (NSR) permit. This project will require a PSD permit from U.S. EPA prior to initiating construction. The PSD permit will include compliance requirements for the New Source Performance Standard for gas turbines (40 CFR 60 Subpart KKKK). The Applicant provided the PSD permit application to the U.S. EPA (Ex. 47), and the application has been deemed complete (U.S. EPA response to PSD Application, Docket No. 39683). The PSD permit may not be completed until after the completion of this licensing case.

The Applicant will demonstrate that the project will comply with Section 41700 of the California State Health and Safety Code, which restricts emissions that would cause nuisance or injury, with the issuance of the District's Final Determination of Compliance and the Energy Commission's affirmative finding for the project.

FINDINGS AND CONCLUSIONS

Based on the evidence, we make the following findings and conclusions:

1. The proposed CGS is located within the jurisdiction of the Colusa County Air Pollution Control District.

2. The project will employ the best available technology to control emissions of criteria pollutants.

3. Project emissions will be fully offset.

4. Use of emission reduction credits in this case is appropriate, and is consistent with applicable federal and state emission control strategies.

5. The District issued a Final Determination of Compliance that finds the CGS will comply with all applicable District rules for project operation.

6. The project's construction-related impacts are temporary and short-term in nature. They are mitigated to below a level of significance by measures identified in the Conditions of Certification.

7. The record contains an adequate analysis of the project's contributions to cumulative air quality impacts.

8. Implementation of the Conditions of Certification listed below ensures that the CGS will not result in any significant direct, indirect, or cumulative impacts to air quality.

CONDITIONS OF CERTIFICATION

AQ-SC1 Air Quality Construction Mitigation Manager (AQCMM): The project owner shall designate and retain an on-site AQCMM who shall be responsible for directing and documenting compliance with conditions **AQ-SC3, AQ-SC4,** and **AQ-SC5** for the entire project site and linear facility construction. The on-site AQCMM may delegate responsibilities to one or more AQCMM Delegates. The AQCMM and AQCMM Delegates shall have full access to all areas of construction on the project site and linear facilities and shall have the authority to stop any or all construction activities as warranted by applicable construction mitigation conditions. The AQCMM and AQCMM Delegates may have other responsibilities in addition to those described in this condition.

The AQCMM shall not be terminated without written consent of the CPM.

Verification: At least 60 days prior to the start of ground disturbance, the project owner shall submit to the CPM, for approval, the name, resume, qualifications, and contact information for the on-site AQCMM and all AQCMM Delegates. The AQCMM and all Delegates must be approved by the CPM before the start of ground disturbance.

AQ-SC2 Air Quality Construction Mitigation Plan (AQCMP): The project owner shall provide an AQCMP, for approval, which details the steps that will be taken and the reporting requirements necessary to ensure compliance with conditions **AQ-SC3, AQ-SC4,** and **AQ-SC5**.

Verification: At least 60 days prior to the start of any ground disturbance, the project owner shall submit the AQCMP to the CPM for approval. The CPM will notify the project owner of any necessary modifications to the plan within 30 days from the date of receipt. The AQCMP must be approved by the CPM before the start of ground disturbance.

AQ-SC3 Construction Fugitive Dust Control: The AQCMM shall submit documentation to the CPM in each Monthly Compliance Report (MCR) that demonstrates compliance with the following mitigation measures for the purposes of preventing all fugitive dust plumes from leaving the project site and linear facility routes. Any deviation from the following mitigation measures shall require prior CPM notification and approval.

a) Areas to be excavated shall be thoroughly pre-wetted prior to excavation.

b) All unpaved roads and disturbed areas in the project and linear construction sites shall be watered as frequently as necessary to comply with the dust mitigation objectives of **AQ-SC4**. The frequency of watering may be reduced or eliminated during periods of precipitation.

c) No vehicle shall exceed 10 miles per hour within the construction site.

d) The construction site entrances shall be posted with visible speed limit signs.

e) All construction equipment vehicle tires shall be inspected and washed as necessary to be cleaned free of dirt prior to entering paved roadways.

f) Gravel ramps of at least 20 feet in length must be provided at the tire washing/cleaning station.

g) All unpaved exits from the construction site shall be graveled or treated to prevent track-out to public roadways.

h) All construction vehicles shall enter the construction site through the treated entrance roadways, unless an alternative route has been submitted to and approved by the CPM.

i) Construction areas adjacent to any paved roadway shall be provided with sandbags or other measures as specified in the Storm Water Pollution Prevention Plan (SWPPP) to prevent runoff to roadways.

j) All paved roads within the construction site shall be swept at least twice daily (or less during periods of precipitation) on days when construction activity occurs to prevent the accumulation of dirt and debris.

k) At least the first 500 feet of any public roadway exiting from the construction site shall be swept at least twice daily (or less during periods of precipitation) on days when construction activity occurs or on any other day when dirt or runoff from the construction site is visible on the public roadways.

l) On-site paved roads shall be swept at least once daily after the evening peak period.

m) All soil storage piles and disturbed areas that remain inactive for longer than 10 days shall be covered or shall be treated with appropriate dust suppressant compounds.

n) All vehicles that are used to transport solid bulk material on public roadways and that have the potential to cause visible emissions shall be provided with a cover, or the materials shall be sufficiently wetted and loaded onto the trucks in a manner to provide at least two feet of freeboard.

o) Wind erosion control techniques (such as windbreaks, water, chemical dust suppressants, and/or vegetation) shall be used on all construction areas that may be disturbed. Any windbreaks installed to comply with this condition shall remain in place until the soil is stabilized or permanently covered with vegetation.

p) Ground cover will be replaced in disturbed areas as soon as possible.

Verification: The project owner shall include in the MCR (1) a summary of all actions taken to maintain compliance with this condition, (2) copies of any complaints filed with the air district in relation to project construction, and (3) any other documentation deemed necessary by the CPM and AQCMM to verify compliance with this condition. Such information may be provided via electronic format or disk at the project owner's discretion.

AQ-SC4 Dust Plume Response Requirement: The AQCMM or an AQCMM Delegate shall monitor all construction activities for visible dust plumes. Observations of visible dust plumes that have the potential to be

transported (1) off the project site or (2) 200 feet beyond the centerline of the construction of linear facilities or (3) within 100 feet upwind of any regularly occupied structures not owned by the project owner indicate that existing mitigation measures are not resulting in effective mitigation. The AQCMM or Delegate shall implement the following procedures for additional mitigation measures in the event that such visible dust plumes are observed:

Step 1: The AQCMM or Delegate shall direct more intensive application of the existing mitigation methods within 15 minutes of making such a determination.

Step 2: The AQCMM or Delegate shall direct implementation of additional methods of dust suppression if Step 1 specified above fails to result in adequate mitigation within 30 minutes of the original determination.

Step 3: The AQCMM or Delegate shall direct a temporary shutdown of the activity causing the emissions if Step 2 specified above fails to result in effective mitigation within one hour of the original determination. The activity shall not restart until the AQCMM or Delegate is satisfied that appropriate additional mitigation or other site conditions have changed so that visual dust plumes will not result upon restarting the shutdown source. The owner/operator may appeal to the CPM any directive from the AQCMM or Delegate to shut down an activity, provided that the shutdown shall go into effect within one hour of the original determination, unless overruled by the CPM before that time.

Verification: The AQCMP shall include a section detailing how the additional mitigation measures will be accomplished within the time limits specified.

AQ-SC5 Diesel-Fueled Engines Control: The AQCMM shall submit to the CPM, in the MCR, a construction mitigation report that demonstrates compliance with the following mitigation measures for the purposes of controlling diesel construction-related emissions. Any deviation from the following mitigation measures shall require prior CPM notification and approval.

a) All diesel-fueled engines used in the construction of the facility shall be fueled only with ultra-low sulfur diesel, which contains no more than 15 ppm sulfur.

b) All diesel-fueled engines used in the construction of the facility shall have clearly visible tags issued by the on-site AQCMM showing that the engine meets the conditions set forth herein.

c) All construction diesel engines, which have a rating of 100 hp or more, shall meet, at a minimum, the Tier 2 California Emission Standards for Off-Road Compression-Ignition Engines as specified in Title 13, California Code of Regulations Section 2423(b)(1) unless certified by the on-site AQCMM that such engine is not available for a particular item of equipment. In the event a Tier 2 engine is not available for any off-road engine larger than 100 hp, that engine shall be equipped with a Tier 1 engine. In the event a Tier 1 engine is not available for any off-road engine larger than 100 hp, that engine shall be equipped with a catalyzed diesel particulate filter (soot filter), unless certified by engine manufacturers or the on-site AQCMM that the use of such devices is not practical for specific engine types. For purposes of this condition, the use of such devices is "not practical" if, among other reasons:

   (1) There is no available soot filter that has been certified by either the California Air Resources Board or U.S. Environmental Protection Agency for the engine in question; or

   (2) The construction equipment is intended to be on-site for 10 days or less.

   (3) The CPM may grant relief from this requirement if the AQCMM can demonstrate that he/she has made a good faith effort to comply with this requirement and that compliance is not possible.

d) The use of a soot filter may be terminated immediately if one of the following conditions exists, provided that the CPM is informed within 10 working days of the termination:

   (1) The use of the soot filter is excessively reducing normal availability of the construction equipment due to increased downtime for maintenance and/or reduced power output due to an excessive increase in backpressure.

   (2) The soot filter is causing or is reasonably expected to cause significant engine damage.

   (3) The soot filter is causing or is reasonably expected to cause a significant risk to workers or the public.

   (4) Any other seriously detrimental cause which has the approval of the CPM prior to the termination being implemented.

e) All heavy earthmoving equipment and heavy duty construction-related trucks with engines meeting the requirements of (c) above shall be properly maintained and the engines tuned to the engine manufacturer's specifications.

f) All diesel heavy construction equipment shall not remain running at idle for more than five minutes, to the extent practical.

g) Construction equipment will employ electric motors when feasible.

Verification: The project owner shall include in the MCR (1) a summary of all actions taken to maintain compliance with this condition, (2) copies of all diesel fuel purchase records, (3) a list of all heavy equipment used on site during that month, including the owner of that equipment and a letter from each owner indicating that equipment has been properly maintained, and (4) any other documentation deemed necessary by the CPM and AQCMM to verify compliance with this condition. Such information may be provided via electronic format or disk at the project owner's discretion.

AQ-SC6 The project owner shall submit to the CPM for review and approval any modification proposed by the project owner to any project air permit. The project owner shall submit to the CPM any modification to any permit proposed by the District or U.S. EPA and any revised permit issued by the District or U.S. EPA, for the project.

Verification: The project owner shall submit any proposed air permit modification to the CPM within five working days of its submittal either by 1) the project owner to an agency, or 2) receipt of proposed modifications from an agency. The project owner shall submit all modified air permits to the CPM within 15 days of receipt.

On July 15, 2009, AQ-SC7 was modified as a result of the CEC's Order Approving PG&E's Amendment #1.

The revised condition and verification language for AQ-SC7 is set forth in the CEC's Order attached to the back of this pdf file.

AQ-SC7 The project owner shall surrender the emission offset credits listed in the Appendix to these Air Quality Conditions of Certification, or a modified list, as allowed by this condition, at the time and in the quantities required by condition **AQ-27** and herein. The project owner may request CPM approval for any substitutions or modification of credits listed in said Appendix. The CPM, in consultation with the District, may approve any such change to the ERC list provided that the project remains in compliance with all applicable laws, ordinances, regulations, and standards; the requested change(s) clearly will not cause the project to result in a significant environmental impact; and each requested change is consistent with applicable federal and state laws and regulations. In addition to the offset requirements in **AQ-27**, the Applicant will provide sufficient VOC and SO_2 ERCs to mitigate the VOC and SO_2 emissions on a 1:1 basis annually, which will require the Applicant to obtain 731.6 pounds of additional SO_2 ERCs prior to initiation of construction.

Verification: The project owner shall provide a record of the required additional SO_2 ERC source(s) prior to initiation of construction. The project owner shall submit to the CPM a list of the ERC certificates and quantities surrendered to the District within 30 days of their surrender. The project owner shall request any changes to the ERC certificates to be surrendered at least 60 days prior to their surrender date as required in condition **AQ-27**. If the CPM, in consultation with the District, approves a substitution or modification, the CPM shall file a statement of the approval with the commission docket and mail a copy of the statement to every person on the post-certification mailing list. The CPM shall maintain an updated list of approved ERCs for the project.

AQ-SC8 Until the California Global Warming Solutions Act of 2006 (AB32) is implemented, the project owner shall either participate in a GHG registry approved by the CPM, or report on an annual basis to the CPM the quantity of greenhouse gases (GHG) emitted as a direct result of facility electricity production.

The project owner shall maintain a record of fuels types and carbon content used on-site for the purpose of power production. These fuels shall include but are not limited to each fuel type burned: (1) in combustion turbines, (2) HRSGs (if applicable) or auxiliary boiler (if applicable), (4) internal combustion engines, (4) flares, and/or (5) for the purpose of startup, shutdown, operation or emission controls.

The project owner may perform annual source tests of CO_2 and CH_4 emissions from the exhaust stacks while firing the facility's primary fuel, using the following test methods or other test methods as approved by the CPM. The project owner shall produce fuel-based emission factors in units of lbs CO_2 equivalent per MMBtu of fuel burned from the annual source tests. If a secondary fuel is approved for the facility, the project owner may also perform these source tests while firing the secondary fuel.

Pollutant	Test Method
CO_2	EPA Method 3A
CH_4	Protocol: EPA Method 18 (VOC measured as CH_4)

As an alternative to performing annual source tests, the project owner may use the Intergovernmental Panel on Climate Change (IPCC) Methodologies for Estimating Greenhouse Gas Emissions (MEGGE). If MEGGE is chosen, the project owner shall calculate the CO_2, CH_4 and N_2O emissions using the appropriate fuel-based carbon content coefficient (for CO_2) and the appropriate fuel-based emission factors (for CH_4 and N_2O).

The project owner shall convert the N_2O and CH_4 emissions into CO_2 equivalent emissions using the current IPCC Global Warming Potentials (GWP). The project owner shall maintain a record of all SF_6 that is used for replenishing on-site transformers. At the end of each reporting period, the project owner shall total the mass of SF_6 used and convert that to a CO_2 equivalent emission using the IPCC GWP for SF_6. The project owner shall maintain a record of all PFCs and HFCs that are used for replenishing on-site refrigeration and chillers directly related to electricity production. At the end of each reporting period, the project owner shall total the mass of PFCs and HFCs used and convert that to a CO_2 equivalent emission using the IPCC GWP.

On an annual basis, the project owner shall report the CO_2 and CO_2 equivalent emissions from the described emissions of CO_2, N_2O, CH_4, SF_6, PFCs, and HFCs.

Verification: The project annual greenhouse gas emissions shall be reported, as a CO_2 equivalent, by the project owner to a climate action registry approved by the CPM, or to the CPM as part of the fourth Quarterly or the annual Air Quality Report, until such time that GHG reporting requirements are adopted and in force for the project as part of the California Global Warming Solutions Act of 2006.

AQ-SC9 The project owner shall submit to the CPM Quarterly Operation Reports, following the end of each calendar quarter, as also required under Condition of Certification **AQ-22**, that include operational and emissions information as necessary to demonstrate compliance with the Conditions of Certification herein. The Quarterly Operation Report will specifically note or highlight incidences of noncompliance.

The CEC Order Approving PG&E's Amendment #1 added two new conditions related to the WSAC. See AQ-SC10 and AQ-SC11 in Order attached to back of this pdf file.

Verification: The project owner shall submit the Quarterly Operation Reports to the CPM and APCO no later than 30 days following the end of each calendar quarter.

DISTRICT FINAL DETERMINATION OF COMPLIANCE CONDITIONS (COC2007H, CEC 2007P)

AQ-1 All facility operating Staff shall be advised of and familiar with these permit conditions.

Verification: The project owner shall submit to the CPM and APCO signed records of facility operating Staff indicating review of permit conditions at least 30 days prior to commencement of operation and shall maintain this training and records documenting this training at the site for inspection.

AQ-2 The "Right of Entry," as provided by the California Health and Safety Code Section 41510 of Division 26, shall apply at all times.

Verification: The project owner shall make the site available to representatives of the District, ARB, and the Energy Commission for inspection, including securing samples of emissions or any records required to be maintained in connection with the emissions sources.

AQ-3 In the case of shutdown or restart of air pollution control equipment for necessary scheduled maintenance, the intent to shut down such equipment shall be reported to the Air Pollution Control Officer at least 24 hours prior to the planned shutdown. Such notification does not exempt the facility from complying with all permit limits and requirements.

Verification: The project owner shall submit to the CPM and APCO notification of scheduled maintenance of air pollution control equipment at least 24 hours prior to any planned shutdowns.

AQ-4 If any upset or breakdown occurs with equipment under permit in such a manner that may cause excess emissions of air contaminants, the APCO shall be notified of such failure or breakdown within 24 hours or by 9:00 a.m. by the following working day. The person responsible shall also submit a written statement of full disclosure of the upset/breakdown to the District within 72 hours. The report shall contain the date, time, duration, estimated emissions, cause, and remedy.

Verification: The project owner shall comply with the notification requirements of the District and submit written copies of these notification reports to the CPM and the APCO as part of the Quarterly Operation Reports (**AQ-22**).

AQ-5 Fugitive emissions, including dust and odors, shall be controlled at all times such that a nuisance is not created at any point beyond the facility's property lines.

Verification: The project owner will document any complaints that it has received from the public in the Quarterly Operation Reports (**AQ-22**). The project owner shall make the site available for inspection by representatives of the District, ARB, and the Energy Commission.

AQ-6 A person shall be designated to oversee the fugitive dust control program described in the application and this document. Entry roads to the proposed facility site will be paved prior to commencing construction. During construction, the people on site shall access real-time weather information from the Western Weather Group to determine the prevailing local wind speed. If wind gusts at the Maxwell weather station exceed 15 mph, construction personnel shall increase the frequency of watering the exposed soil. All of the mitigation measures will be implemented.

Verification: The project owner shall make the site available for inspection by representatives of the District, ARB, and the Energy Commission.

AQ-7 The placement of the source testing ports shall be as specified in 40 CFR Part 60, Appendix A, Method 1. A source test protocol shall be submitted to the District for approval the Air Pollution Control Officer (APCO), at least 45 days prior to conducting the annual source tests. The District shall be notified at least 10 days prior to actual source testing.

Verification: The project owner shall supply diagrams of the proposed source testing port design and location for approval at least 30 days before erecting the HRSG stacks. The project owner shall provide a source test plan to the CPM and District for approval 45 days prior to testing. The project owner shall notify the CPM and the District 10 days prior to any compliance source test.

On July 15, 2009, AQ-8 was modified as a result of the CEC's Order Approving PG&E's Amendment #1. The revised verification language for AQ-8 is set forth in the CEC's Order attached to the back of this pdf file.

AQ-8 Stack gas testing, using EPA, ARB, or other APCO approved methods shall be required on an annual basis for NOx, VOC, and CO on the HRSG stacks and the auxiliary boiler stack. The HRSG stacks and the auxiliary boiler stack shall also be tested for SOx and PM10 emissions during the first year and if requested by the APCO, in subsequent years. The emergency generator and firewater pump engines shall be tested for NOx, SOx, VOC, CO, and PM10 during the first year and thereafter only as requested by the APCO.

Verification: The results and field data collected during source tests shall be submitted to the CPM and the District within 60 days of testing.

AQ-9 Annual testing of the HRSG stacks shall include quantification of formaldehyde and ammonia (NH_3) emissions for compliance with permit limits. The facility owner/operator shall verify, by continuous recording, the ammonia injection rate to the system. The ammonia source test shall be conducted over the expected operating range of the turbine (including, but not limited to 50%, 75%, and 100% load) to establish the range of ammonia injection rates necessary to achieve NOx emission reductions while maintaining the ammonia slip levels. The source test shall also determine the correlation between the heat input rates of each gas turbine and ammonia mass emissions.

Verification: The results and field data collected during source tests shall be submitted to the CPM and the District within 60 days of testing. The proposed ammonia injection/emission rate correlation will be provided to the District and CPM for approval with the ammonia source test report.

AQ-10 The gas turbines, duct burners, and auxiliary boiler shall be fired exclusively on pipeline quality natural gas.

Verification: The project owner shall submit information on the quality and type of fuel used for the gas turbines, duct burners, and auxiliary boiler to the CPM and the APCO in the Quarterly Operation Reports (**AQ-22**).

On July 15, 2009, AQ-10 was modified as a result of the CEC's Order Approving PG&E's Amendment #1. The revised condition and verification language for AQ-10 is set forth in the CEC's Order attached to the back of this pdf file.

AQ-11 The annual average sulfur content in the natural gas used at the facility shall be less than or equal to 0.3 grains per 100 SCF. Monthly testing, at the site, using approved methods (i.e., EPA 19 and ASTM D-3246) is required to determine the sulfur content of the natural gas. Pacific Gas and Electric natural gas testing data from Burney will be also be reviewed and provided to the District.

Verification: The project owner shall compile the required data on the sulfur content of the natural gas and submit the information to the CPM and the APCO in the Quarterly Operation Reports (**AQ-22**).

On July 15, 2009, AQ-12 was modified as a result of the CEC's Order Approving PG&E's Amendment #1. The revised condition and verification language for AQ-12 is set forth in the CEC's Order attached to the back of this pdf file.

AQ-12 The sulfur content limit in diesel fuel used in the construction equipment and emergency generator and firewater pump engines shall be no more than 15 ppm. Emissions from the two stationary engines mentioned above shall not exceed Ringelmann 0.5 or 10 percent opacity for an aggregate of three minutes in a one-hour period.

Verification: The project owner shall compile the required data on the sulfur content of the diesel fuel and emissions from the emergency generator and firewater pump engines and submit the information to the CPM and the APCO in the Quarterly Operation Reports (**AQ-22**). The project owner shall make the site available for inspection by representatives of the District, ARB, and the Energy Commission.

AQ-13 All applicable federal standards and test procedures of Subpart KKKK - -Standards of Performance for Stationary Combustion Turbines shall be met.

Verification: The project owner shall provide copies of all correspondence with U.S.EPA regarding compliance with Subpart KKKK provisions to the District and CPM in the Quarterly Operation Reports (**AQ-22**), and shall integrate required testing procedures into the facility source testing plan (**AQ-8**).

AQ-14 The CTGs shall meet a VOC limit of 2.0 ppmvd with duct burner firing and 1.38 ppmvd without duct burner firing @ 15% O_2 averaged over one hour. Maximum hourly steady state emission limits for each CTG are:

Pounds VOC with Duct Firing	Pounds VOC without Duct Firing
7.2	3.4

Verification: The project owner shall submit to the CPM and APCO CTG source test emissions data demonstrating compliance with this condition as required by condition **AQ-8** and shall provide operating data that establishes ongoing compliance with this condition using a determined relationship with CO emissions, previously approved by the CPM and APCO using source test data, as part of the Quarterly Operation Reports (**AQ-22**).

AQ-15 The CTGs shall meet a NOx limit of 2.0 ppmvd @ 15% O_2 averaged over one hour except during commissioning. Maximum hourly steady state emission limits for each CTG are:

Pounds NOx with Duct Firing	Pounds NOx without Duct Firing
20.7	15.3

Verification: The project owner shall submit to the CPM and APCO CTG continuous emissions monitoring system data demonstrating compliance with this condition as part of the Quarterly Operation Reports (**AQ-22**).

AQ-16 The CTGs shall meet a CO limit of 3.0 ppmvd @ 15% O_2 over a three-hour rolling average except during commissioning. Maximum hourly steady state emission limits for each CTG are:

Pounds CO with Duct Firing	Pounds CO without Duct Firing
18.9	14.0

Verification: The project owner shall submit to the CPM and APCO CTG continuous emissions monitoring system data demonstrating compliance with this condition as part of the Quarterly Operation Reports (**AQ-22**).

On July 15, 2009, AQ-17 was modified as a result of the CEC's Order Approving PG&E's Amendment #1. The revised condition and verification language for AQ-17 is set forth in the CEC's Order attached to the back of this pdf file.

AQ-17 The auxiliary boiler shall meet a NOx limit of 15.0 ppmvd @ 3% O_2 over one hour.

Verification: The project owner shall submit to the CPM and APCO auxiliary boiler source test emissions data demonstrating compliance with this condition as required in condition **AQ-8** and shall provide confirmation of normal operations of the boiler as part of the Quarterly Operation Reports (**AQ-22**).

AQ-18 Ammonia slip shall be limited to 5.0 ppmvd @ 15% O_2 over one hour. Formaldehyde emissions will be limited to 0.917 lbs per million standard cubic feet (MMscf) of natural gas. Maximum hourly steady state emission limits for each CTG are:

Pounds NH_3 with Duct Firing	Pounds NH_3 without Duct Firing
19.2	14.2

Verification: The project owner shall submit to the CPM and APCO CTG emissions data demonstrating compliance with this condition as part of the Quarterly Operation Reports (**AQ-22**). The project owner shall provide for approval of the CPM and APCO a calculation method to determine the ammonia slip emissions, using source test data, based on the NOx concentration and the ammonia injection rate; and this calculation shall be revised for approval as necessary after each source test performed under **AQ-9**.

AQ-19 Continuous emission monitoring (CEM) systems shall be installed to sample, analyze, and record NOx, CO, and O_2 concentration in the

exhaust gas of both HRSG stacks. This system will generate reports of emissions data in accordance with permit requirements and will send alarm signals to the plant distributed control system (DCS) control room when the level of emissions approaches or exceeds pre-selected limits. Relative accuracy test audits (RATA) shall be conducted annual to verify the performance of the CEM system.

Verification: The project owner shall make the site available for inspection by representatives of the District, ARB, and the Energy Commission to verify the continuous monitoring system is properly installed and operational. Emissions data generated by the CEMS system shall be submitted to the CPM and APCO as part of the Quarterly Operation Reports (**AQ-22**). The RATA test results shall be provided along with the annual source test report as required under **AQ-8**.

AQ-20 The Colusa County APCD shall have remote access to the data logger at the facility to enable District staff to monitor real-time emissions as recorded by the CEMs.

Verification: The project owner shall make the site available for inspection by representatives of the District, ARB, and the Energy Commission to confirm remote access to CEMs data is accessible remotely by Colusa County Air Pollution Control District.

AQ-21 The CEMs shall be installed, calibrated, and operational prior to the first firing of the gas turbines. The commissioning phase of the turbines and heat recovery steam generators without abatement of emissions shall not exceed 500 total hours. All reasonable efforts will be made to shorten the length of time of the commissioning phase. Only one gas turbine may be commissioned at a time. Emissions from the commissioning phase of the turbines and heat recovery steam generators shall accrue toward the quarterly and annual emission limits specified in these conditions.

Verification: The project owner shall provide notification to the District and the CPM of the anticipated dates for installation, calibration, and testing for the CEMS at least 10 days prior to installation. The project owner shall provide a report to the District and CPM for approval demonstrating compliance with CEMS calibration requirements prior to turbine first fire. The project owner shall provide monthly commissioning status reports, which include hours of operation without abatement and associated emissions data.

AQ-22 Quarterly reports of CEM and process data, including startup information, shall be submitted to the District within 30 days after the end of each quarter. Format of the data submission will be determined by the District and may include both electronic spreadsheet and hard copy files.

Verification: The project owner shall submit to the CPM and APCO the CEM audits demonstrating compliance with this condition in Quarterly Operation Reports.

AQ-23 The emissions from the emergency generator and firewater pump engines shall not exceed the hourly limits established in the table below. Total annual operating hours shall not exceed 50 per engine. Testing of these two engines shall not be allowed during gas turbine commissioning and facility startup operations. The generator and firewater pump engines must comply with the Tier rating emissions for their model years.

On July 15, 2009, AQ-23 was modified as a result of the CEC's Order Approving PG&E's Amendment #1. The revised condition and verification language for AQ-23 is set forth in the CEC's Order attached to the back of this pdf.

One-Hour Maximum Emissions (lbs)		
Source	**Generator**	**Fire Pump**
NOx	13.88	1.98
CO	0.32	1.72
VOC	0.15	Incl. in NOx
PM10	0.09	0.10
SO_2	0.01	<0.01

Verification: The project owner shall submit to the CPM and APCO for approval the emergency generator and firewater pump selected manufacturer emissions data and engines specifications demonstrating compliance with this condition at least 30 days prior to installation. The project owner shall provide 12-month rolling engine operating hours data to show compliance with the operating hours restriction limits in this condition as part of the Quarterly Operation Reports (**AQ-22**).

AQ-24 The emission rates from the auxiliary boiler shall not exceed the hourly limits established in the table below. The boiler shall not operate more than 3,744 hours per year.

On July 15, 2009, AQ-24 was modified as a result of the CEC's Order Approving PG&E's Amendment #1. The revised condition and verification language for AQ-24 is set forth in the CEC's Order attached to the back of this pdf.

One-Hour Maximum Emissions (lbs)		
Source		**Auxiliary Boiler**
NOx		0.79
CO		1.61
VOC		0.18
PM10		0.33
SO_2		0.13

Verification: The project owner shall submit to the CPM and APCO for approval the auxiliary boiler selected manufacturer emissions data and specifications demonstrating compliance with this condition and condition **AQ-17** at least 30 days prior to installation. The project owner shall submit to the CPM and APCO auxiliary boiler source test emissions data required under condition **AQ-8** demonstrating compliance with the emission limits for the pollutants included in the source test.

AQ-25 The total emissions from the CTGs and HRSGs shall not exceed those established below for hourly and daily operations.

On July 15, 2009, AQ-25 was modified as a result of the CEC's Order Approving PG&E's Amendment #1. The revised condition and verification language for AQ-25 is set forth in the CEC's Order attached to the back of this pdf.

On July 15, 2009, AQ-25 was modified as a result of the CEC's Order Approving PG&E's Amendment #1. The revised condition and verification language for AQ-25 is set forth in the CEC's Order attached to the back of this pdf.

Maximum Emissions Both Turbines (lbs)		
Pollutant	**1-Hour Emissions**	**24-Hour Emissions**
NOx	666.60	2,994.60
CO	967.00	7,659.00
VOC	55.40	630.60
PM10	40.20	964.80
SO_2	14.80	355.20

Verification: The project owner shall submit to the CPM and APCO CTG and HRSG emissions data demonstrating compliance with this condition as part of the Quarterly Operation Reports (**AQ-22**).

On July 15, 2009, AQ-26 was modified as a result of the CEC's Order Approving PG&E's Amendment #1. The revised condition and verification language for AQ-26 is set forth in the CEC's Order attached to the back of this pdf.

AQ-26 The total emissions from the Colusa Power Plant shall not exceed the limits established below.

Quarterly and Annual Estimated Combustion Emissions from CGS Facility					
Pollutant	1st Quarter Emissions (tons)	2nd Quarter Emissions (tons)	3rd Quarter Emissions (tons)	4th Quarter Emissions (tons)	Annual Emissions (tons)
NOx	45.60	43.62	51.34	44.31	184.87
CO	54.20	52.40	107.06	53.86	267.52
VOCs	12.36	11.69	11.90	11.82	47.77
PM10	35.29	35.39	35.70	35.69	142.08
SO_2	4.05	3.83	3.87	3.87	15.62

Verification: The project owner shall submit to the CPM and APCO plant emissions data demonstrating compliance with this condition as part of the Quarterly Operation Reports (**AQ-22**).

AQ-27 Offsets for the Colusa Generating Station power plant shall be in effect prior to operation of the facility and will not be less than the following amounts at any time. The offsets presented in the table below reflect distance factors and the VOC:NOx interpollutant ratio. Sufficient ERCs for PM10 will be provided prior to start of construction activities to offset construction PM10 emissions.

On July 15, 2009, AQ-27 was modified as a result of the CEC's Order Approving PG&E's Amendment #1. The revised condition and verification language for AQ-27 is set forth in the CEC's Order attached to the back of this pdf.

Emission Offsets by Calendar Quarter				
Pollutant in tons	**Quarter 1**	**Quarter 2**	**Quarter 3**	**Quarter 4**
Oxides of nitrogen (NO_2)	50.75	47.01	36.55	53.80
Volatile organic compounds (CH_4)	12.36	11.69	11.90	11.82
Particulate Matter PM10	32.51	30.75	24.09	34.74
Oxides of sulfur (SO_2)	3.50	2.94	1.39	3.85

Verification: At least 30 days prior to commencing construction, the project owner shall surrender no less than 5.08 tons of PM10 ERCs per quarter to the

On July 15, 2009, AQ-28 was modified as a result of the CEC's Order Approving PG&E's Amendment #1. The revised condition language for AQ-28 is set forth in the CEC's Order attached to the back of this pdf.

District and provide documentation of that surrender to the CPM and APCO. At least 60 days prior to commencing CTG first fire, the project owner shall surrender the remaining ERC certificates to offset the emissions in the amounts shown above, and as required in Condition **AQ-SC7**, to the District and provide documentation of that surrender to the CPM and APCO.

AQ-28 The construction of the facility cannot commence until all construction permits, including the U.S. EPA PSD permit, are obtained.

Verification: The project owner shall keep proof of the project's District air permit and Energy Commission certification including copies of all permit conditions and Conditions of Certification on site starting at the commencement of construction through the final decommissioning of the project. The project owner shall make the District's permit conditions and Conditions of Certification available at the project site to representatives of the District, ARB and the Energy Commission for inspection. The project owner shall provide a copy of the U.S. EPA PSD permit to the CPM once it is available.

AQ-29 Total facility emissions of Hazardous Air Pollutants (HAP) shall not exceed 10 tons per year for any single pollutant except ammonia, formaldehyde, and propylene.

Verification: The project owner shall submit to the CPM and APCO a HAPs emissions estimation plan for approval within one year of initiating operation that will consider integrating both emission source test data and recognized HAPs emission factors for the calculation of HAPs emissions. The project owner shall submit to the CPM and APCO emission estimates using the approved emission estimation plan methodology to demonstrate compliance with this condition as part of the Quarterly Operation Reports (**AQ-22**) fourth quarter report.

SEE REVISED TABLE ATTACHED TO CEC ORDER APPROVING AMENDMENT #1 (APPENDED TO BACK OF THIS PDF)

AIR QUALITY CONDITIONS OF CERTIFICATION APPENDIX

EMISSION REDUCTION CREDITS

Condition of Certification AQ-SC7
Required Emission Reduction Credits [a]

ERC Certificate Number and Number Reduction Source Location Distance from Project	Pollutant	Total Q1 (lb)	Total Q2 (lb)	Total Q3 (lb)	Total Q4 (lb)	Annual (lbs)
Stationary Source ERCs						
Highway 70 Industrial Park, LP // Oroville, CA // Butte County [b] (Cert. 08-05-36, 08-05-37, 08-05-39) > 20 < 50 miles	NOx	35,000.0	35,000.0	35,000.0	35,000.0	140,000.0
	VOC	87,500.0	87,500.0	87,500.0	87,500.0	350,000.0
	PM10	33,500.0	33,500.0	33,500.0	33,500.0	134,000.0
	SO_2	0.0	0.0	0.0	0.0	0.0
Jack W. Baber // Sierra Mountain Mills, Camptonville, CA // Yuba County [c] (Cert. ERC-9937006-00T) > 50 miles	NOx	420.0	707.0	641.0	501.0	2,269.0
	VOC	199.0	335.0	304.0	238.0	1,076.0
	PM10	6,034.0	10,156.0	9,218.0	7,201.0	32,609.0
	SO_2	166.0	279.0	254.0	198.0	897.0
Agricultural Burn Cessation ERCs						
Baber Family Trust // Colusa, CA // Colusa County [d] (Cert. 06-01-02-03) < 20 miles	NOx	1,004.8	810.3	324.1	1,102.0	3,241.2
	VOC	908.1	732.4	292.9	996.0	2,929.4
	PM10	1,217.3	981.7	392.7	1,335.1	3,926.8
	SO_2	212.5	171.4	68.6	233.1	685.6
Jack W. Baber and Judith S. Baber // Colusa, CA // Colusa County [d] (Cert. 06-01-02-04) < 20 miles	NOx	2,401.8	1,936.9	774.8	2,634.2	7,747.7
	VOC	2,170.8	1,750.7	700.3	2,380.9	7,002.7
	PM10	2,909.8	2,346.6	938.7	3,191.4	9,386.5
	SO_2	508.1	409.7	163.9	557.2	1,638.9
Estate of Jack W. Baber Jr. // Colusa, CA // Colusa County [d] (Cert. 06-01-02-05) < 20 miles	NOx	848.5	684.3	273.7	930.7	2,737.2
	VOC	767.0	618.5	247.4	841.2	2,474.1
	PM10	1,028.0	829.1	331.6	1,127.5	3,316.2
	SO_2	179.5	144.8	57.9	196.9	579.1
Pixie E. Baber // Colusa, CA // Colusa County [d] (Cert. 06-01-02-05.2) < 20 miles	NOx	809.0	625.5	261.0	887.3	2,582.8
	VOC	731.2	589.7	235.9	802.0	2,358.8
	PM10	980.2	790.5	316.2	1,075.0	3,161.9
	SO_2	171.1	138.0	55.2	187.7	552.0
Jack W. Baber and Judith S. Baber // Colusa, CA // Colusa County [d] (Cert. 06-01-02-06) < 20 miles	NOx	587.8	474.1	189.6	644.7	1,896.2
	VOC	531.3	428.5	171.4	582.7	1,713.9
	PM10	712.2	574.3	229.7	781.1	2,297.3
	SO_2	124.3	100.3	40.1	136.4	401.1
Inez Garrette // Colusa, CA // Colusa County [d] (Cert. 06-01-02-07) < 20 miles	NOx	195.9	158.0	63.2	214.9	632.0
	VOC	177.1	142.8	57.1	194.2	571.2
	PM10	237.4	191.4	76.6	260.4	765.8
	SO_2	41.4	33.4	13.4	45.5	133.7

Jack W. Baber and Judith S. Baber // Colusa, CA // Colusa County [d] (Cert. 06-01-02-08) < 20 miles	NOx	2,083.5	1,680.2	672.1	2,285.1	6,720.9
	VOC	1,883.1	1,518.7	607.5	2,065.4	6,074.7
	PM10	2,524.2	2,035.6	814.3	2,768.5	8,142.6
	SO_2	440.7	355.4	142.2	483.4	1,421.7
Jack W. Baber Jr. // Colusa, CA // Colusa County [d] (Cert. 06-01-02-09) < 20 miles	NOx	1,577.2	1,271.9	508.8	1,729.8	5,087.7
	VOC	1,425.5	1,149.6	459.9	1,563.5	4,598.5
	PM10	1,910.8	1,541.0	616.4	2,095.7	6,163.9
	SO_2	333.6	269.1	107.6	365.9	1,076.2
Davis Ranches // Colusa, CA // Colusa County [d] (Cert. 06-7-2001-1) > 20 miles < 50 miles	NOx	13,034.2	10,511.5	4,204.6	14,295.6	42,045.9
	VOC	11,780.9	9,500.7	3,800.3	12,921.0	38,002.9
	PM10	15,791.4	12,735.0	5,094.0	17,319.6	50,940.0
	SO_2	2,752.2	2,223.6	889.4	3,024.1	8,889.3
Gunnersfield Ent., Inc. // Maxwell, CA // Colusa County [d] (Cert. 06-01-02-02) < 20 miles	NOx	5,616.0	4,529.0	1,811.6	6,159.4	18,116.0
	VOC	5,076.0	4,093.5	1,637.4	5,567.2	16,374.1
	PM10	6,803.9	5,487.0	2,194.8	7,462.4	21,948.1
	SO_2	1,188.0	958.1	383.2	1,303.0	3,832.3
Jon B. Chaney // Maxwell, CA // Colusa County [d] (Cert. 06-01-02-01) < 20 miles	NOx	2,104.1	1,696.9	678.5	2,307.8	6,787.3
	VOC	1,901.8	1,533.7	613.5	2,085.9	6,134.9
	PM10	2,549.3	2,055.8	822.3	2,796.0	8,223.4
	SO_2	445.1	359.0	143.6	488.2	1,435.9
Jack DeWit // Maxwell, CA // Colusa County [d] (Cert. 06-07-02-05) < 20 miles	NOx	1,143.0	921.8	368.7	1,253.7	3,687.2
	VOC	1,033.1	833.2	333.3	1,133.1	3,332.7
	PM10	1,384.8	1,116.8	446.7	1,518.8	4,467.1
	SO_2	241.8	195.0	78.0	265.2	780.0
Jerry Maltby et. al. // Williams, CA // Colusa County [d] (Cert. 06-06-11-01) < 20 miles	NOx	4,522.5	3,647.2	1,458.9	4,960.2	14,588.8
	VOC	4,087.7	3,296.5	1,318.6	4,483.3	13,186.1
	PM10	5,479.2	4,418.7	1,767.5	6,009.5	17,674.9
	SO_2	956.7	771.5	308.6	1,049.3	3,086.1
Keeley Family Limited Partnership // Colusa, CA // Colusa County [d] (Cert. 06-07-06-01) < 20 miles	NOx	1,685.2	1,359.0	543.6	1,848.2	5436.0
	VOC	1,523.1	1,228.3	491.3	1,670.5	4913.3
	PM10	2,041.6	1,646.5	658.6	2,239.2	6585.9
	SO_2	356.5	287.5	115.0	391.0	1149.9
Jim Lagrande // Colusa, CA // Colusa County [e] (Cert. 06-01-03-01) < 20 miles	NOx	1,315.0	1,118.2	567.0	1,448.9	4,449.1
	VOC	1,192.2	1,110.7	634.7	1,312.5	4,250.1
	PM10	1,598.0	1,496.9	864.4	1,758.3	5,717.6
	SO_2	279.0	242.7	119.6	305.5	946.8
Charles Tuttle, Gordon Ranch // Maxwell, CA // Colusa County [e] (Cert. 06-07-02-01) < 20 miles	NOx	1,592.3	1,448.5	789.1	1,750.8	5,580.7
	VOC	1,439.2	1,451.0	951.0	1,586.3	5,427.5
	PM10	1,929.2	1,960.9	1,301.1	2,126.8	7,318.0
	SO_2	336.8	306.0	166.3	370.3	1,179.5

Charles Tuttle, Tenant Ranch // Maxwell, CA // Colusa County [f] (Cert. 06-07-02-03) < 20 miles	NOx	1.6	118.8	352.8	3.2	476.4
	VOC	5.1	210.0	857.5	5.7	1,078.3
	PM10	5.1	292.9	1,095.4	7.9	1,401.3
	SO_2	0.2	24.9	62.2	0.7	88.0
Charles Tuttle, Helphenstine Ranch // Maxwell, CA // Colusa County [g] (Cert. 06-07-02-02) < 20 miles	NOx	0.0	85.8	143.8	2.3	232.0
	VOC	0.0	151.7	254.2	4.1	410.0
	PM10	0.0	211.6	354.5	5.7	571.8
	SO_2	0.0	18.0	30.1	0.5	48.5
Charles Tuttle, Williams Ranch // Maxwell, CA // Colusa County [g] (Cert. 06-07-02-04) < 20 miles	NOx	0.0	60.9	102.1	1.6	164.7
	VOC	0.0	107.7	180.4	2.9	291.0
	PM10	0.0	150.2	251.7	4.1	405.9
	SO_2	0.0	12.8	21.4	0.3	34.5
William Payne // Woodland, CA // Sutter County [d] (Cert. ERC 2001-26) > 20 miles < 50 miles	NOx	1,701.0	1,874.0	3,033.0	1,901.0	8,509.0
	VOC	1,538.0	2,362.0	8,034.0	1,718.0	13,652.0
	PM10	2,061.0	3,240.0	9,931.0	2,303.0	17,535.0
	SO_2	360.0	395.0	489.0	402.0	1,646.0

Source: E&LW, 2006d.

[a] The quantities listed are the certificate totals. The total quantity required for offsetting may be less than the total for each pollutant shown above, and those remaining credits can be retained by the applicant at their discretion after surrendering the amounts required as shown in Condition of Certification AQ-SC7.

[b] These emission reductions were the result of the permanent shutdown of the Louisiana Pacific fiberboard production plant and associated emission sources (hardboard production line, two boilers, etc.) in Oroville.

[c] These emission reductions were the result of the permanent shutdown of two wood-fired boilers at Sierra Mountain Mills.

[d] Agricultural burn cessation crop is rice for these sources.

[e] Agricultural burn cessation crop is rice and wheat for these sources.

[f] Agricultural burn cessation crop is safflower and wheat for this source.

[g] Agricultural burn cessation crop is wheat for these sources.

B. PUBLIC HEALTH

The public health analysis supplements the previous discussion of air quality and considers the potential public health effects from project emissions of toxic air contaminants. In this analysis, we review the evidence concerning whether such emissions will result in significant public health impacts or violate standards for public health protection.[4]

SUMMARY AND DISCUSSION OF THE EVIDENCE

Project construction and operation will result in routine emissions of toxic air contaminants (TACs). These substances are categorized as noncriteria pollutants because there are no ambient air quality standards established to regulate their emissions.[5] In the absence of standards, state and federal regulatory programs have developed a health risk assessment procedure to evaluate potential health effects from these emissions.

The risk assessment consists of the following steps:

- Identify the types and amounts of hazardous substances that the CGS could emit to the environment;
- Estimate worst-case concentrations of project emissions in the environment using dispersion modeling;
- Estimate amounts of pollutants to which people could be exposed through inhalation, ingestion, and dermal contact;[6] and

---

[4] This Decision discusses other potential public health concerns in the following sections. The accidental release of hazardous materials is discussed in **HAZARDOUS MATERIALS MANAGEMENT** and **WORKER SAFETY AND FIRE PROTECTION**. Electromagnetic fields are discussed in the section on **TRANSMISSION LINE SAFETY AND NUISANCE**. Potential impacts to soils and surface water sources are discussed in the **SOIL AND WATER RESOURCES** section. Hazardous and non-hazardous wastes are described in **WASTE MANAGEMENT**.

[5] Criteria pollutants are discussed in the **AIR QUALITY** section, *supra*.

[6] Exposure pathways, or ways in which people might come into contact with toxic substances, include inhalation, dermal (through the skin) absorption, soil ingestion, consumption of locally grown plant foods, and mother's milk.

- Characterize potential health risks by comparing worst-case exposure to safe standards based on known health effects. (Ex. 200, p. 4.7-5.)

Typically, the initial risk analysis for a project is performed at a "screening level" which is designed to conservatively estimate actual health risks. The risks for screening purposes are based on examining conditions that would lead to the highest, or worst-case, risks and then using those conditions in the study. Such conditions include:

- Using the highest levels of pollutants that could be emitted from the plant;
- Assuming weather conditions that would lead to the maximum ambient concentration of pollutants;
- Using the type of air quality computer model which predicts the greatest plausible impacts;
- Calculating health risks at the location where the pollutant concentrations are estimated to be the highest;
- Using health-based standards designed to protect the most sensitive members of the population (i.e., the young, elderly, and those with respiratory illnesses); and
- Assuming that an individual's exposure to cancer-causing agents occurs continuously for 70 years.

(*id.*)

The risk assessment process addresses three categories of health impacts: acute (short-term) health effects; chronic (long-term) non-cancer effects; and cancer risk (also long-term). Acute health effects result from short-term (one-hour) exposure to relatively high concentrations of pollutants. Chronic health effects are those which arise as a result of long-term exposure to lower concentrations of pollutants. The exposure period is considered to be approximately from ten to one hundred percent of a lifetime, or from seven to seventy years. (Ex. 200, pp. 4.7-5 – 4.7-6.)

The analysis for non-cancer health effects compares the maximum project contaminant levels to safe levels called "reference exposure levels" or RELs. These are amounts of toxic substances to which even sensitive people can be

exposed and suffer no adverse health effects. These exposure levels are designed to protect the most sensitive individuals in the population such as infants, the aged, and people suffering from illness or disease which makes them more sensitive to the effects of toxic substance exposure. The RELs are based on the most sensitive adverse health effects reported, and include margins of safety.

For carcinogenic substances, the health assessment considers the risk of developing cancer and assumes that continuous exposure to the cancer-causing substance occurs over a 70-year lifetime. The risk that is calculated is not meant to project the actual expected incidence of cancer, but rather a theoretical upper-bound number based on worst-case assumptions. (Ex. 200, p. 4.7-6.)

Cancer risk is expressed in chances per million, and is a function of the maximum expected pollutant concentration, the probability that a particular pollutant will cause cancer, and the length of the exposure period. Cancer risks for each carcinogen are added to yield total cancer risk. The conservative nature of the screening assumptions used means that actual cancer risks due to project emissions are likely to be considerably lower than those estimated.

If the screening analysis predicts no significant risks, then no further analysis is required. However, if risks are above the significance level, then further analysis, using more realistic, site-specific assumptions, is performed to obtain a more accurate assessment of potential public health risks. A total hazard index of less than one indicates that cumulative worst-case exposures are less than, or below, the safe levels[7]. Cancer risks are calculated based on the total risk from exposure to all cancer causing chemicals. A significant increased lifetime cancer risk occurs if one excess case of cancer in an exposed population of 100,000

[7] The hazard index for every toxic substance which has the same type of health effect is added to yield a total hazard index. The total hazard index is calculated separately for acute and chronic effects.

(equivalent to a risk of ten in one million or 10×10^{-6}) is calculated to occur. (Ex. 200, pp. 4.7-7 - 4.7-8.)

Toxic emissions will be attributable to the project during both its construction and its operation phases. Applicant and Staff each performed an analysis of the impacts of the CGS which evaluated potential cancer and non-cancer health risks to the public. (Ex 200, pp. 4.7-10 - 4.7-14.)

The evidence explains, in depth, the methodology used in identifying and quantifying the emission rates of the toxic non-criteria pollutants which could adversely affect public health. The Applicant's estimates of CGS's potential contribution to the area's carcinogenic and non-carcinogenic pollutants were obtained from a screening-level health risk assessment consistent with OEHHA's Air Toxics Hot Spots Program Risk Assessment Guidelines. The results from this assessment are summarized in **Public Health Table 1**. (Ex. 200, p. 4.7-12.)

PUBLIC HEALTH Table 1
CGS Operation Hazard/Risk

Type of Hazard/Risk	Hazard Index/Risk	Significance Level	Significant?
Acute Non-cancer	0.42	1.0	No
Chronic Non-cancer	0.03	1.0	No
Individual Cancer	1.19×10^{-6}	10.0×10^{-6}	No

Source: Ex. 200, p. 4.7-12.

This modeling shows that all cancer risks due to emissions from CGS are less than the significance threshold of ten in one million and that all chronic and acute non-cancer hazard indices are less than the 1.0 threshold. CGS's emissions would not present significant cancer risk or non-cancer hazards to any member of the public. Staff's analysis, while slightly different from the Applicant's, also shows that the CGS emissions would not present significant cancer risk or

noncancer hazards to any member of the public, including low income and minority populations. (*id.*)

Cumulative Impacts and Mitigation

The maximum cancer risk for emissions from CGS is 1.17 in one million located at the facility western fence line. The maximum impact location occurs where pollutant concentrations from CGS would theoretically be the highest. Even at this location, we do not expect any significant change in lifetime risk to any person, and the increase does not represent any real contribution to the average lifetime cancer incidence rate due to all causes (environmental as well as life-style and genetic). Modeled facility-related residential risks are lower at more distant locations, and actual risks are expected to be much lower since worst-case estimates are based on conservative assumptions and thus overstate the true magnitude of the risk expected. Therefore, we do not consider the incremental impact of the additional risk posed by the CGS to be either individually or cumulatively significant.

The calculated worst-case long-term noncancer health impact from CGS (0.028 hazard index) is well below the significance level of 1.0 at the location of maximum impact. At this level, we do not expect any cumulative health impacts to be the result of emissions from the proposed power plant. As with cancer risk, long-term hazard would be lower at all other locations.

The only existing facility in the vicinity of the proposed CGS project that may contribute to a cumulative public health impact is the PG&E Delevan Compressor Station, adjacent to the project site, which has three gas turbines. The Applicant conducted a Cumulative Impact Analysis (CIA) for criteria pollutants emitted by this facility and the proposed CGS, which is presented in Table 8.1-28 of Exhibit 8. With the exception of one proposal for an 18-unit subdivision development, there are no known developments planned in the vicinity of the CGS site.

We find that the CGS will not cause a significant cumulative public health impact even when added to the impact from the compressor station because: 1) the maximum individual cancer risk at the point of maximum impact (PMI) is very low -1.2 in one million - which is far less than the level of significance 10 in one million; 2) this risk is found at the western fence line, not near the compressor station; 3) the risk at any other location would be lower than that at the PMI; and 4) even if the compressor station risk was significant, the CGS contribution to a cumulative risk would be less than 10 percent of the total, thus rending the contribution insignificant.

FINDINGS AND CONCLUSIONS

Based on the evidence, we make the following findings and conclusion:

1. Construction and normal operation of the project will result in the routine release of criteria and noncriteria pollutants that have the potential to adversely impact public health.

2. Emissions of criteria pollutants, which are discussed in the **AIR QUALITY** section of this Decision, will be mitigated to levels consistent with applicable standards.

3. Applicant performed a health risk assessment, using well-established scientific protocol, to analyze potential adverse health effects of toxic air contaminants.

4. Emission of non-criteria pollutants from the CGS will not cause acute or chronic adverse public health effects.

5. The maximum non-cancer and the maximum cancer risks associated with the project are substantially below the significance thresholds commonly accepted for risk analysis purposes.

6. Emissions from the construction, operation, and closure of the proposed natural gas-burning CGS will not have a significant impact on the public health of the surrounding population.

7. The impact of the proposed CGS, combined with the existing Delevan Compressor Station, would not create a cumulatively significant impact. There are no known or reasonable foreseeable future developments which would add to or create a significant cumulative impact.

We therefore conclude that project emissions of noncriteria pollutants do not pose a significant direct, indirect, or cumulative public health risk and that the project will comply with all applicable laws, ordinances, regulations, and standards. No Conditions of Certification are proposed.

July 15, 2009

CONCLUSION AND ORDER

The California Energy Commission hereby adopts Staff's recommendations and approves the following changes to the Commission Decision for the Colusa Generating Station Project. New language is shown as **bold and underlined**, and deleted language is shown in ~~strikeout~~.

CONDITIONS OF CERTIFICATION

AQ-SC7 The project shall surrender the emission offset credits listed in Appendix A or a modified list, as allowed by this condition, at the time and in the quantities required by condition **AQ-27** and herein. The project owner may request CPM approval for any substitutions or modification of credits listed in Appendix A. The CPM, in consultation with the District, may approve any such change to the ERC list provided that the project remains in compliance with all applicable laws, ordinances, regulations, and standards; the requested change(s) clearly will not cause the project to result in a significant environmental impact; and each requested change is consistent with applicable federal and state laws and regulations. In addition to the offset requirements of stipulated in **AQ-27**, the applicant will provide sufficient VOC and SO_2 ERCs to mitigate the VOC and SO_2 emissions on a 1:1 basis annually.~~, which will require the applicant to obtain 731.6 pounds of additional SO_2 ERCs prior to initiation of construction.~~

Revisions to the offset package that require review and approval by the CPM include revisions in the amount of stationary source ERCs that are stipulated to be surrendered, where as currently stipulated all stationary source ERCs for NOx, PM10 and SO_2 as listed in Appendix A will be surrendered and all VOC ERCs needed to offset the project will come from the listed stationary source VOC ERCs. Additionally, any increase in the amount of VOC for NOx interpollutant offsets must be approved with an updated interpollutant offset ratio analysis.

Verification: ~~The project owner shall provide a record of the required additional SO_2 ERC source(s) prior to initiation of construction.~~ The project owner shall submit to the CPM a list of the ERC certificates and quantities surrendered to the District within 30 days of their surrender. The project owner shall request any changes to the ERC certificates to be surrendered at least 60 days prior to their surrender date as required in condition **AQ-27**. If the CPM, in consultation with the District, approves a substitution or modification, the CPM shall file a statement of the approval with the commission docket and mail a copy of the statement to every person on the post-certification mailing list. The CPM shall maintain an updated list of approved ERCs for the project.

AQ-SC10 The wet surface air cooler shall have a mist eliminator with a manufacturer guaranteed mist reduction rate of 0.005% or less of the water recirculation rate.

Verification: The project owner shall provide the CPM a copy of the manufacturer guarantee for the mist eliminator 30 days prior to installation of the wet surface air cooler.

AQ-SC11 The wet surface air cooler spray water shall be tested for total dissolved solids and that data shall be used to determine and report the particulate matter emissions from

the wet surface air cooler. The wet surface air cooler spray water shall be tested at least once annually during the anticipated summer operation peak period (July through September).

Verification: The project owner shall provide the water quality test results and the wet surface air cooler particulate (PM10/PM2.5) emissions estimates to the CPM as part of the fourth quarter's quarterly operational report (**AQ-SC9**).

DISTRICT CONDITIONS

Additionally, staff recommends adopting the revised Colusa County Air Pollution Control District's conditions of certification (COC 2009) as shown below. District conditions not shown below are recommended to remain unchanged.

Verification: **AQ-8** Stack gas testing, using EPA, ARB, or other APCO approved methods shall be required on an annual basis for NOx, VOC, and CO on the HRSG stacks ~~and the auxiliary boiler stack~~. The HRSG stacks ~~and the auxiliary boiler stack~~ shall also be tested for SOx and PM10 emissions during the first year and if requested by the APCO, in subsequent years. The natural gas water bath heater~~emergency generator and firewater pump engines~~ shall be tested for NOx, SOx, VOC, CO, and PM10 during the first year and thereafter only as requested by the APCO. The results and field data collected during source tests shall be submitted to the CPM and the District within 60 days of testing.

AQ-10 The gas turbines, duct burners, and natural gas water bath heater~~auxiliary boiler~~ shall be fired exclusively on pipeline quality natural gas.

Verification: The project owner shall submit information on the quality and type of fuel used for the gas turbines, duct burners, and natural gas water bath heater~~auxiliary boiler~~ to the CPM and the APCO in the Quarterly Operation Reports (**AQ-22**).

AQ-12 The sulfur content limit in diesel fuel used in the construction equipment ~~and emergency generator and firewater pump engines~~ shall be no more than 15 ppm. ~~Emissions from the two stationary engines mentioned above shall not exceed Ringelmann 0.5 or 10 percent opacity for an aggregate of three minutes in a one-hour period.~~

Verification: The project owner shall compile and submit the required data on the sulfur content of the diesel fuel as required in staff condition **AQ-SC5**.~~and emissions from the emergency generator and firewater pump engines and submit the information to the CPM and the APCO in the Quarterly Operation Reports (AQ-22). The project owner shall make the site available for inspection by representatives of the District, ARB, and the Energy Commission.~~

AQ-17 The ~~auxiliary boiler~~natural gas water bath heater shall have a low NOx burner and shall meet a NOx limit of ~~15.0~~ 30.0 ppmvd @ 3% O_2 averaged over one hour.

Verification: The project owner shall submit to the CPM and APCO natural gas water bath heater~~auxiliary boiler~~ source test emissions data demonstrating compliance with this condition as required in condition **AQ-8** and shall provide confirmation of normal operations of the heater~~boiler~~ as part of the Quarterly Operation Reports (**AQ-22**).

AQ-23 The emissions from the natural gas water bath heater ~~emergency generator and firewater pump engines~~ shall not exceed the hourly limits established in the table below. ~~Total annual operating hours shall not exceed 50 per engine. Testing of these two engines shall not be allowed during gas turbine commissioning and facility startup operations. The generator and firewater pump engines must comply with the Tier rating emissions for their model years.~~

One-Hour Maximum Emissions (lbs)			
Source	**Bath Heater**	~~**Generator**~~	~~**Fire Pump**~~
NOx	0.39	~~13.88~~	~~1.98~~
CO	0.79	~~0.32~~	~~1.72~~
VOC	0.03	~~0.15~~	~~Incl. in NOx~~
PM10	0.03	~~0.09~~	~~0.10~~
SO_2	0.03	~~0.01~~	~~<0.01~~

Verification: The project owner shall submit to the CPM and APCO for approval the natural gas water bath heater ~~emergency generator and firewater pump~~ selected manufacturer emissions data ~~and engines specifications~~ demonstrating compliance with this condition at least 30 days prior to installation. ~~The project owner shall provide 12-month rolling engine operating hours data to show compliance with the operating hours restriction limits in this condition as part of the Quarterly Operation Reports (**AQ-22**).~~

AQ-24 Deleted. ~~The emission rates from the auxiliary boiler shall not exceed the hourly limits established in the table below. The boiler shall not operate more than 3,744 hours per year.~~

~~One-Hour Maximum Emissions (lbs)~~		
~~**Source**~~		~~**Auxiliary Boiler**~~
~~NOx~~		~~0.79~~
~~CO~~		~~1.61~~
~~VOC~~		~~0.18~~
~~PM10~~		~~0.33~~
~~SO_2~~		~~0.13~~

Verification: ~~The project owner shall submit to the CPM and APCO for approval the auxiliary boiler selected manufacturer emissions data and specifications demonstrating compliance with this condition and condition **AQ-17** at least 30 days prior to installation. The project owner shall submit to the CPM and APCO auxiliary boiler source test emissions data required under condition **AQ-8** demonstrating compliance with the emission limits for the pollutants included in the source test.~~

AQ-25 The total emissions from the CTGs and HRSGs shall not exceed those established below for hourly and daily operations.

Maximum Emissions Both Turbines (lbs)		
Pollutant	**1-Hour Emissions**	**24-Hour Emissions**
NOx	666.60	2,994.60
CO	967.00	7,659.00
VOC	55.40	630.60
PM10	27.00~~40.20~~	648.00~~964.80~~
SO_2	14.80	355.20

Verification: The project owner shall submit to the CPM and APCO CTG and HRSG emissions data demonstrating compliance with this condition as part of the Quarterly Operation Reports (**AQ-22**).

AQ-26 The total emissions from the Colusa Power Plant shall not exceed the limits established below.

Quarterly and Annual Estimated Combustion Emissions from CGS Facility					
Pollutant	**1st Quarter Emissions (tons)**	**2nd Quarter Emissions (tons)**	**3rd Quarter Emissions (tons)**	**4th Quarter Emissions (tons)**	**Annual Emissions (tons)**
NOx	45.56~~45.60~~	43.58~~43.62~~	51.30~~51.34~~	44.27~~44.31~~	184.70~~184.87~~
CO	54.29~~54.20~~	52.49~~52.40~~	107.15~~107.06~~	53.95~~53.86~~	267.89~~267.52~~
VOCs	12.30~~12.36~~	11.63~~11.69~~	11.84~~11.90~~	11.76~~11.82~~	47.54~~47.77~~
PM10	25.54~~35.29~~	25.78~~35.39~~	26.02~~35.70~~	26.02~~35.69~~	103.36~~142.08~~
SO_2	4.07~~4.05~~	3.85~~3.83~~	3.89~~3.87~~	3.89~~3.87~~	15.69~~15.62~~

Verification: The project owner shall submit to the CPM and APCO plant emissions data demonstrating compliance with this condition as part of the Quarterly Operation Reports (**AQ-22**).

AQ-27 Offsets for the Colusa Generating Station power plant shall be in effect prior to operation of the facility and will not be less than the following amounts at any time. The offsets presented in the first table below do not reflect distance factors adjustments, ~~and~~ the 1.4:1 VOC:NOx interpollutant ratio, nor the 25 tons per year emission allowance. No less than 5.08 tons of PM10 ERCs per quarter shall~~All ERCs for PM10 will~~ be provided prior to start of construction activities to offset construction PM10 emissions.

Emission Offsets by Calendar Quarter (not adjusted)					
Pollutant in tons	**Quarter 1**	**Quarter 2**	**Quarter 3**	**Quarter 4**	**Annual**
Oxides of nitrogen (NO_2)	36.7950.7	35.41~~47.0~~	31.36~~36.5~~	37.93~~53.8~~	141.49
Volatile organic compounds	39.89~~12.3~~	39.89~~11.6~~	39.89~~11.9~~	39.89~~11.8~~	159.56
Particulate Matter PM10	30.43~~32.5~~	28.33~~30.7~~	22.15~~24.0~~	31.75~~34.7~~	112.66
~~Oxides of sulfur (SO_2)~~	~~3.50~~	~~2.94~~	~~1.39~~	~~3.85~~	

Emission Offsets by Calendar Quarter (adjusted for distance and interpollutant offset ratio)					
Pollutant in tons	**Quarter 1**	**Quarter 2**	**Quarter 3**	**Quarter 4**	**Annual**
Oxides of nitrogen (NO_2)	26.20	47.01	36.55	53.80	99.83
Volatile organic compounds	26.59	26.59	26.59	26.59	106.36
Particulate Matter PM10	21.22	19.73	15.21	22.20	78.36

Verification: At least 30 days prior to commencing construction, the project owner shall surrender PM10 ERC certificates in the amounts to offset the emissions shown above to the District and provide documentation of that surrender to the CPM and APCO. At least 60 days prior to commencing CTG first fire, the project owner shall surrender the remaining ERC certificates to offset the emissions in the amounts shown above and as required in Condition **AQ-SC7**, to the District and provide documentation of that surrender to the CPM and APCO.

AQ-28 The construction of the facility cannot commence until all construction permits, including the U.S. EPA PSD permit, are obtained. Specified, limited construction activities are allowed prior to issuance of the PSD permit as stated in the USEPA policy document dated December 18, 1978.

Verification: The project owner shall keep proof of the project's District air permit and Energy Commission certification including copies of all permit conditions and conditions of certification on site starting at the commencement of construction through the final decommissioning of the project. The project owner shall make the District's permit conditions and conditions of certification available at the project site to representatives of the District, ARB and the Energy Commission for inspection. The project owner shall provide a copy of the U.S. EPA PSD permit to the CPM once it is available.

July 15, 2009

References

CEC (California Energy Commission) 2007. Final Staff Assessment Colusa Generating Station (06-AFC-9). November 2007.

CEC 2008. Final Commission Decision Colusa Generating Station (06-AFC-9). April 2008.

COC (Colusa County Air Pollution Control District) 2009. Revised Authority to Construct Conditions. E-mailed from Les Fife, CCAPCD Consultant, to William Walters, Aspen Environmental Group. March 5, 2009.

PG&E (Pacific Gas & Electric Company) 2008a. Colusa Generating Station (06-AFC-09) Amendment 1. Submitted August 2008.

PG&E (Pacific Gas & Electric Company) 2008b. Colusa Generating Station (06-AFC-09) Data Response Set 1 (1-17). Submitted November 2008.

PG&E (Pacific Gas & Electric Company) 2009a. Colusa Generating Station (06-AFC-09) Data Response Set 2 (18, 19). Submitted January 2009.

PG&E (Pacific Gas & Electric Company) 2009b. Colusa Generating Station (06-AFC-09) Data Response Set 3 (20-24). Submitted February 2009.

July 15, 2009

Appendix A
Emissions Reduction Credits

Condition of Certification AQ-SC7
Required Emission Reduction Credits [a]

ERC Certificate Number and Number Reduction Source Location Distance from Project	Pollutant	Total Q1 (lb)	Total Q2 (lb)	Total Q3 (lb)	Total Q4 (lb)	Annual (lbs)
Stationary Source ERCs						
Highway 70 Industrial Park, LP // Oroville, CA // Butte County [b] (Cert. 08-05-36, 08-05-37, 08-05-39) > 20 < 50 miles	NOx	35,000.0	35,000.0	35,000.0	35,000.0	140,000.0
	VOC	87,500.0	87,500.0	87,500.0	87,500.0	350,000.0
	PM10	33,500.0	33,500.0	33,500.0	33,500.0	134,000.0
	SO_2	0.0	0.0	0.0	0.0	0.0
PGE Credits/Gerber Compressor Station//Gerber, CA//Tehama County (Cert. 01-009) > 20 < 50 miles	NOx	15,995.9	15,995.9	15,995.9	15,995.9	63,983.6
	VOC	0.0	0.0	0.0	0.0	0.0
	PM10	352.2	352.2	352.2	352.2	1,408.8
	SO_2	18.0	18.0	18.0	18.0	72.0
Jack W. Baber // Sierra Mountain Mills, Camptonville, CA // Yuba County [c] (Cert. ERC-9937006-00T) > 50 miles	NOx	420.0	707.0	641.0	501.0	2,269.0
	VOC	199.0	335.0	304.0	238.0	1,076.0
	~~PM10~~	~~6,034.0~~	~~10,156.0~~	~~9,218.0~~	~~7,201.0~~	~~32,609.0~~
	SO_2	166.0	279.0	254.0	198.0	897.0
Agricultural Burn Cessation ERCs						
Baber Family Trust // Colusa, CA // Colusa County [d] (Cert. 06-01-02-03) < 20 miles	~~NOx~~	~~1,004.8~~	~~810.3~~	~~324.1~~	~~1,102.0~~	~~3,241.2~~
	~~VOC~~	~~908.1~~	~~732.4~~	~~292.9~~	~~996.0~~	~~2,929.4~~
	~~PM10~~	~~1,217.3~~	~~981.7~~	~~392.7~~	~~1,335.1~~	~~3,926.8~~
	SO_2	212.5	171.4	68.6	233.1	685.6
Jack W. Baber and Judith S. Baber // Colusa, CA // Colusa County [d] (Cert. 06-01-02-04) < 20 miles	~~NOx~~	~~2,401.8~~	~~1,936.9~~	~~774.8~~	~~2,634.2~~	~~7,747.7~~
	~~VOC~~	~~2,170.8~~	~~1,750.7~~	~~700.3~~	~~2,380.9~~	~~7,002.7~~
	~~PM10~~	~~2,909.8~~	~~2,346.6~~	~~938.7~~	~~3,191.4~~	~~9,386.5~~
	SO_2	508.1	409.7	163.9	557.2	1,638.9
Estate of Jack W. Baber Jr. // Colusa, CA // Colusa County [d] (Cert. 06-01-02-05) < 20 miles	~~NOx~~	~~848.5~~	~~684.3~~	~~273.7~~	~~930.7~~	~~2,737.2~~
	~~VOC~~	~~767.0~~	~~618.5~~	~~247.4~~	~~841.2~~	~~2,474.1~~
	~~PM10~~	~~1,028.0~~	~~829.1~~	~~331.6~~	~~1,127.5~~	~~3,316.2~~
	SO_2	179.5	144.8	57.9	196.9	579.1
Pixie E. Baber // Colusa, CA // Colusa County [d] (Cert. 06-01-02-05.2) < 20 miles	NOx	809.0	625.5	261.0	887.3	2,582.8
	~~VOC~~	~~731.2~~	~~589.7~~	~~235.9~~	~~802.0~~	~~2,358.8~~
	PM10	980.2	790.5	316.2	1,075.0	3,161.9
	SO_2	171.1	138.0	55.2	187.7	552.0
Jack W. Baber and Judith S. Baber // Colusa, CA // Colusa County [d] (Cert. 06-01-02-06) < 20 miles	NOx	587.8	474.1	189.6	644.7	1,896.2
	VOC	531.3	428.5	171.4	582.7	1,713.9
	~~PM10~~	~~712.2~~	~~574.3~~	~~229.7~~	~~781.1~~	~~2,297.3~~
	~~SO_2~~	~~124.3~~	~~100.3~~	~~40.1~~	~~136.4~~	~~401.1~~

July 15, 2009

IT IS SO ORDERED.

Date: 7/15/09

STATE OF CALIFORNIA
ENERGY RESOURCES CONSERVATION
AND DEVELOPMENT COMMISSION

KAREN DOUGLAS
Chairman

Colusa County APCD
100 Sunrise Blvd. Suite A-3
Colusa, Ca. 95932 : (530) 458-0595

Attachment B

June 11, 2007 – Corrected – August 23, 2007
Amended April 14, 2008 (condition 27) and June 5, 2008 (condition 28)

FINAL
DETERMINATION OF COMPLIANCE

COLUSA GENERATING STATION
E&L Westcoast, L.L.C.
Application submitted November 22,2006

COLUSA COUNTY
AIR POLLUTION CONTROL DISTRICT
100 Sunrise Blvd, Suite F
Colusa CA 95932

November 28, 2006

TABLE OF CONTENTS

I APPLICANT

II BACKGROUND INFORMATION

III FACILITY LOCATION

IV FACILITY DESCRIPTION

- PROCESS EQUIPMENT
- OPERATING CONDITIONS
- AIR POLLUTION CONTROL EQUIPMENT / STRATEGIES
- AIR POLLUTION MITIGATION MEASURES

V FACILITY EMISSIONS

VI AIR QUALITY CONCENTRATIONS

VII COMPLIANCE ANALYSES

- GENERAL REQUIREMENTS
- AUTHORITY TO CONSTRUCT
  - NEW SOURCE REVIEW RULE
  - BEST AVAILABLE CONTROL TECHNOLOGY
  - OFFSET REQUIREMENTS
  - AIR QUALITY IMPACT ANALYSES
- PROHIBITORY RULES
- AIR TOXICS
  - RISK ASSESSMENT
- NEW SOURCE PERFORMANCE STANDARDS
- TITLE V FEDERAL OPERATING PERMIT

VIII PERMIT CONDITIONS

IX APPENDICES

COLUSA GENERATING STATION PROJECT

I APPLICANT

This Authority to Construct/Permit to Operate (ATC/PTO) application is for the construction and operation of a nominally rated 660 megawatt (MW) combined cycle power plant in Colusa County by E&L Westcoast, L.L.C. (E&L Westcoast).

E&L Westcoast, LLC
8403 Colesville, Suite 915
Silver Spring, Maryland 20910

Contact:
Mr. Andrew Welch, P.E.
Project Manager
E&L Westcoast, LLC

II BACKGROUND INFORMATION

The application was submitted to the Colusa County Air Pollution Control District (CCAPCD) on November 22, 2006 with the intention of obtaining a Determination of Compliance. The submittal was also intended to serve as an application for an Authority to Construct from the District.

The proposed project is sited adjacent to existing industrial facilities in an unincorporated area of Colusa County (Section 35, Township 18N, Range 4W) designated Agricultural-General (A-G) and zoned Exclusive Agriculture (EA). The Colusa Generating Station (CGS) is compatible with these industrial facilities. The closest resident is approximately 1.7 miles southeast of the site. E&L Westcoast has applied to Colusa County for a change in General Plan Land Use Designation and Zoning, and a subdivision of the 100-acre parcel. The application to the County will be processed in conjunction with the California Energy Commission's (CEC) review of this project utilizing the CEC's role as lead agency for the California Environmental Quality Act (CEQA) and its environmental analysis.

III FACILITY LOCATION

The CGS is proposed to be located about 4 miles west of Interstate 5 (I-5) in Colusa County, California on a 100-acre parcel of land. The site is adjacent to the PG&E Delevan Compressor Station near Maxwell. The power plant and switchyard will occupy approximately 26.6 acres within the 100-acre project site. The site is presently undeveloped agricultural land used for grazing cattle. Site topography is rolling hills from 175 to 190 feet above mean sea level. The map below shows the site in relation to nearby roads and the towns of Delevan and Maxwell.

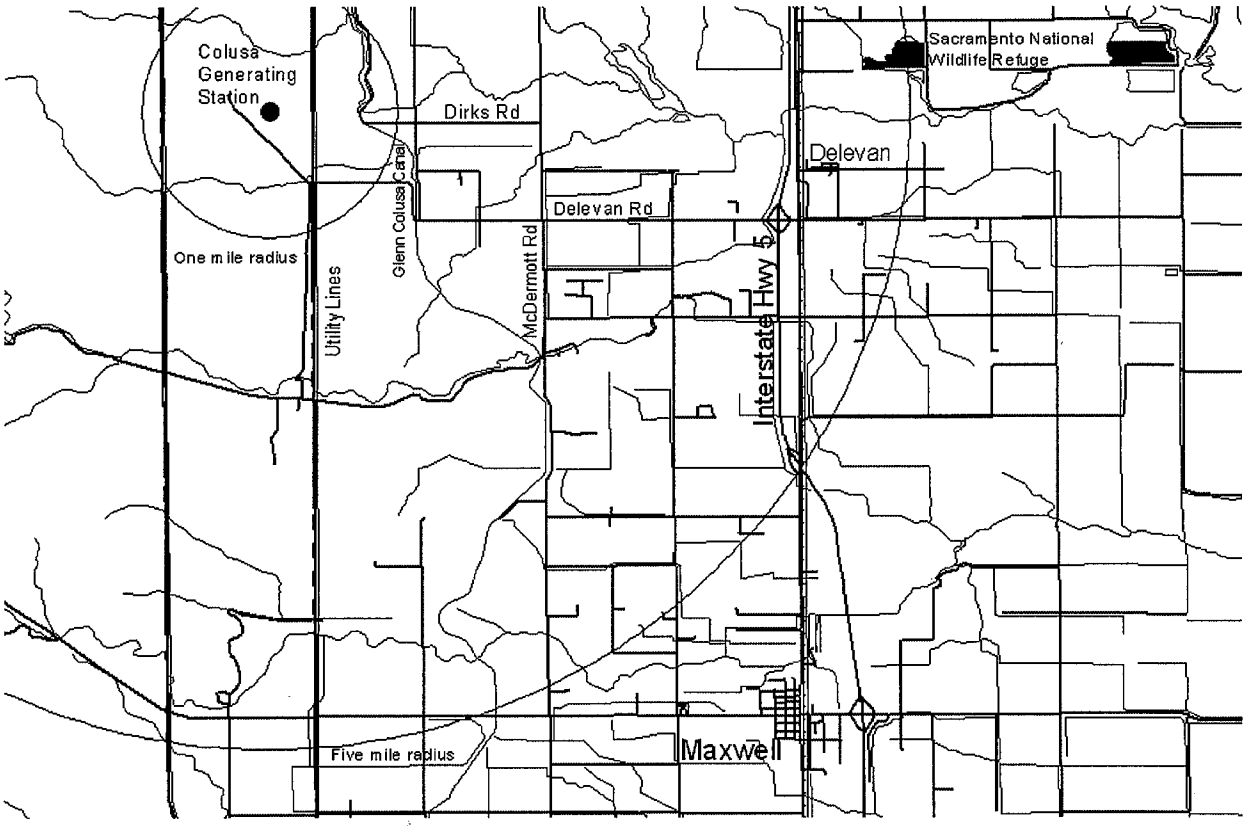

IV FACILITY DESCRIPTION

The proposed CGS power plant will consist of two General Electric (GE) Frame 7-FA combustion gas turbines (CTGs) equipped with dry, low nitrogen oxide (DLN) combustors; two heat recovery steam generators (HRSGs), each equipped with a duct burner, an oxidation catalyst, and an aqueous ammonia selective catalytic reduction (SCR) system; a multistage steam turbine generator (STG); dry cooling tower technology; an auxiliary boiler with ultra low NOx burner; and associated support equipment. Each CTG will generate an average of 172 MW. Up to 320 MW will be produced by the steam turbine.

PROCESS EQUIPMENT

The CGS will include two GE Frame 7-FA combustion gas turbines with electrical generators. They will burn natural gas fuel. Gas purchased from suppliers will be delivered to the project site via a new 8-inch pipeline interconnected to the Pacific Gas Transmission/PG&E gas transmission lines. The CTGs will each be equipped with evaporative inlet air coolers/filters to enhance turbine performance in hot weather. An auxiliary boiler will be installed at the facility. The boiler is used to generate steam that is vented to the CTG trains to preheat the equipment which allows for quicker startup.

Hot exhaust gases from the CTGs will be directed to parallel HRSGs where steam will be generated at three pressures. The steam produced by the HRSGs will be combined to drive a single steam turbine. The HRSGs will include duct burners to increase steam output and achieve higher levels of power output in selected modes of operation. Cooled exhaust gases from each HRSG will be exhausted to the atmosphere through a stack that will be approximately 175 feet in height.

Steam from the HRSGs will be directed to the steam turbine, then exhausted and condensed in an air-cooled condenser. Condensate from the condenser is returned to the steam cycle. The CGS will use "dry" cooling technology for its operation.

Each of the CTGs and the steam turbine are connected to electric generators, which generate electrical energy at 18 kilovolts.

The proposed facility will have a backup emergency generator (1,000 kW) powered by a diesel engine. Also, two emergency firewater pumps are planned, one electric powered and the other by a diesel fired internal combustion engine. The engine will be tested periodically but otherwise only operate to pump water from the firewater storage tank in the event of a fire.

The CGS will have one remote reservoir cold solvent degreasing station. This equipment will employ low VOC solvent used at room temperature. The solvent will be stored within an enclosed remote reservoir and sprayed on parts within a basin that drains back to the solvent reservoir. The degreasing station will be equipped with a lid that will be closed when the degreaser is not in use. No rags or other porous material will be stored in the degreaser. Spent solvent will be recycled or disposed of in an appropriate manner by an approved contractor.

Major Project Equipment

Equipment	Quantity	Make/Model/Size/Capacity
Combustion Turbine Generators	2	General Electric 7-FA 1917.2 MMbtu/hr
Steam Turbine Generator	1	320 MW condensing reheat STG
Heat Recovery Steam Generators	2	Duct burners rated at 688 MMbtu/hr
Auxiliary Boiler	1	NBC or equivalent 44 MMbtu/hr
Firewater Pump Engines	2	One a 300 hp diesel fired
Emergency Generator 1,000 kW	1	1,340 hp diesel engine powered
Aqueous Ammonia Storage Tank	1	20,000 US gal for NOx control
SCR Catalysts	2	NOx control
Oxidation Catalysts	2	VOC and CO control

OPERATING CONDITIONS

The CGS plant will be operated 7 days a week, 24 hours a day. In any given hour, the plant may be operating at peak load, base load, or part load with both CTGs or with one CTG running. Peak load operation will most likely occur during summer on-peak hours, and minimum load operation during non-summer off-peak hours. Shutdown periods for annual maintenance will be scheduled during extended periods of low demand, which typically occur in the winter or early spring.

The CGS facility will burn natural gas fuel in the turbines, duct burners and auxiliary boiler.

Natural Gas Analysis

Constituent	Percent by Volume
Methane	94
Ethane	3
Propane	0.1
n-Butane	0.01
i-Butane	0.01
n-Pentane	0.00
i-Pentane	0.01
Hexane+	0.01
Oxygen	0.00
Nitrogen	2.2
Carbon dioxide	0.66
Total	100.00
Sulfur (grains per 100 scf)	<0.20
Specific Gravity (air = 1.00)	0.59
Higher Heating Value (Btu/scf)	1010

Source: PG&E 2006.
Btu = British thermal unit(s)
scf = standard cubic feet

Heat and material balances are presented in the following table. These are four typical operating cases. Further clarification of the duct burner and evaporative cooler operations is presented as it relates to ambient weather conditions. Prevailing temperature and relative humidity influence the need for operation of these systems.

Case	Description	Ambient Temp, °F	Duct Fire Status	Evaporation Cooler Status	CGT Firing Rate LHV	HRSG Duct Firing Rate LHV	Net Facility Output CGT&STG
1	July Peak	94	On	On	1,558.3	574.2	640.0
2	ISO	59	On	Off	1,601.9	565.6	666.3
3	ISO	59	Off	Off	1,601.9	0.0	519.4
4	ISO, minimum	59	Off	Off	1,045.4	0.0	130.0
Note	Independent System Operator (ISO) – Firing Rates in MM Btu/hr – LHV is 20,300 Btu/lb – Output MW						

Case	Description	Ambient Temp, °F	Duct Fire Status	Evaporation Cooler Status	CGT A Output	CGT B Output	STG Output
1	July Peak	94	On	On	166.4	166.4	327.9
2	ISO	59	On	Off	172.9	172.9	341.3
3	ISO	59	Off	Off	172.9	172.9	188.1
4	ISO, minimum	59	Off	Off	86.4	0.0	55.9
Note	Independent System Operator (ISO) – Output in MW before subtracting the auxiliary load ~ 20-14 MW						

Two CTG operations (base load and cycling load) are described below in terms of the anticipated number of startups per year and annual hours online with and without duct firing.

These definitions apply to the following tables: "Hot Start" means less than 8 hours since time of last firing (Startup time:90 minutes); "Warm Start" means between 8 and 72 hours since time of last firing (Startup time: 180 minutes); and "Cold Start" means more than 72 hours since time of last firing (Startup time: 270 minutes).

Quarterly and Annual Turbine Estimated Operating Conditions (if base load)					
Operating Condition	1st Quarter	2nd Quarter	3rd Quarter	4th Quarter	Annual
Number of Startups	14	14	14	14	56
Hot Starts	10.5	10.5	10.5	10.5	42
Warm Starts	0	0	0	0	0
Cold Starts	3.5	3.5	3.5	3.5	14
Startup/Shutdown Time (hours)	38.5	38.5	38.5	38.5	154
Turbines w/o Duct Burners (hours)	1,082	1,106	1,129	1,129	4,446
Turbines w/ Duct Burners (hours)	1,040	1,040	1,040	1,040	4,160
Total CTG Operating Hours	2,160	2,184	2,208	2,208	8,760

Quarterly and Annual Turbine Estimated Operating Conditions (if cycling load)					
Operating Condition	1st Quarter	2nd Quarter	3rd Quarter	4th Quarter	Annual
Number of Startups	74	74	74	74	296
Hot Starts	61	61	61	61	244
Warm Starts	12	12	12	12	48
Cold Starts	1	1	1	1	4
Startup/Shutdown Time (hours)	168	168	168	168	672
Turbines w/o Duct Burners (hours)	0	0	0	0	0
Turbines w/ Duct Burners (hours)	1,040	1,040	1,040	1,040	4,160
Total CTG Operating Hours	1,208	1,208	1,208	1,208	4,832

Hourly fuel use rates of the facility's main combustion equipment are indicated in the next table. Natural gas is the primary fuel with diesel being used in the emergency generator and firewater pump engines.

Source	**Fuel – Units/Hr**	**Maximum**
Combustion Gas Turbine, each	Gas MMBtu-HHV	1,917.2
Duct Burner, each	Gas MMBtu-HHV	674.3
Auxiliary Boiler	Gas MMBtu	44
Emergency Generator	Diesel MMBtu	9.9
Firewater Pump Engine	Diesel MMBtu	2.2

For gas turbines "normal" conditions are 100% load and 60F average annual ambient temperature and "maximum" conditions are 100% load and 18F winter minimum temperature. For the duct burners "normal" conditions are 100% load and 60F average annual ambient temperature and "maximum"

conditions are full fire and 114F summer maximum temperature. The boiler's "maximum" fuel use rate is at the nameplate rating. The emergency generator's "normal" conditions are weekly testing (one hour) at 50% load and "maximum" conditions are 100% load or 1,340 brake horsepower (bhp). The firewater pump engine's "normal" conditions are weekly testing (one hour) at 50% load and "maximum" conditions are 100% load or 300 brake horsepower (bhp).

AIR POLLUTION CONTROL EQUIPMENT / STRATEGIES

Air pollution emissions from the combustion of natural gas in the CTG and HRSG duct burners are controlled by the best available control technology (BACT) systems. Emissions that are controlled include NO_X, CO, VOCs, PM_{10}, and SO_2. A continuous emissions monitoring system (CEMS) will be installed to monitor NO_X, CO, and oxygen (O_2) concentrations in the stack emissions. The CEMS generates a log of emissions data for compliance documentation and activates an alarm in the plant control room when stack emissions exceed specified limits.

The facility will include selective catalytic reduction (SCR) with ammonia injection emissions control equipment for reduction of nitrogen oxides (NO_x) and an oxidation catalyst for reduction of carbon monoxide (CO) and volatile organic compound (VOC) emissions in the exhaust gas.

NOx Control

Dry low NOx (DLN) combustors in the combustion turbines, low NOx duct burners, and SCR will be used to control NO_x concentrations in the exhaust gas emitted to the atmosphere. DLN combustors in the CTGs followed by SCR in the HRSGs will control stack NO_X emissions to a maximum 2.0 ppmvd corrected to 15 percent oxygen. The DLN combustors control NO_X emissions to approximately 9 ppmvd at the CTG exhausts by pre-mixing fuel and air immediately prior to combustion. The SCRs equipment will include a reactor chamber, catalyst modules, ammonia storage system, ammonia vaporization and injection system, and monitoring equipment and sensors. The SCR process uses aqueous ammonia as a reagent.

The auxiliary boiler will be equipped with an ultra low NOx burner.

CO and VOC Control

An oxidation catalyst installed in the HRSG will control the CO and VOC emissions from the CTG combustors and HRSG duct burners. The HRSG limit for CO emissions will be 3 ppmvd to ensure that VOC emissions are controlled to less than 2 ppmvd at 15 percent oxygen. This catalytic system will promote the oxidation of CO to carbon dioxide (CO_2) and VOCs to CO_2 and water vapor without the need for additional reagents such as ammonia.

PM_{10} Particulate Control

Particulate emissions will be controlled using clean-burning natural gas as the exclusive fuel for the CTGs and duct burners. PM_{10} emissions consist primarily of hydrocarbon particles formed during combustion. In addition, the CTGs will be equipped with high-efficiency inlet air filters.

SOx Control

Sulfur oxides will be controlled using pipeline-quality natural gas as the exclusive fuel for the CTGs and duct burners. The amount of SO_x emissions is dependent upon the amount of sulfur compounds in the natural gas. The Public Utilities Commission has established standards for the sulfur content in natural gas. The level of sulfur will be limited to 1.0 grains per 100 standard cubic feet of gas.

Toxic Control

Use of natural gas and state-of-the-art combustion technology will minimize the quantities of potentially toxic air emissions that will be created. The SCR process will use aqueous ammonia. Ammonia slip will be limited to 5.0 ppmvd corrected to 15 percent oxygen.

Mitigation Measures for Dust Control

Dust emissions from construction activities are expected to be 90 percent with the following measures.

1. Frequent watering of unpaved roads and disturbed areas (at least twice a day).
2. Limit speed of vehicles on the construction areas to no more than 10 miles per hour.
3. Sweep paved internal roads after the evening peak period.
4. Increase frequency of watering when wind speeds exceed 15 miles per hour.
5. Employ tire washing and gravel ramps prior to entering a public roadway to limit accumulated mud and dirt deposited on the roads.
6. Pave the entrance roadways to the construction site.
7. Place sandbags adjacent to roadways to prevent run-off to public roadways.
8. Employ dust sweeping vehicles at least twice a day to sweep public roadways that are used by construction and worker vehicles.
9. Sweep newly paved roads at least twice weekly.
10. Replace ground cover in disturbed areas as quickly as possible.
11. Cover all trucks hauling dirt, sand, soil or other loose materials and maintain a minimum of six inches of freeboard between the top of the load and the top of the trailer.
12. Limit equipment idle times to no more than 15 minutes.
13. Employ electric motors for construction equipment when feasible.
14. Apply covers or dust suppressants to soil storage piles and disturbed areas that remain inactive for over two weeks.
15. Pre-wet the soil to be excavated during construction.

V FACILITY EMISSIONS

Construction Emissions

The primary emission sources during the construction phase include fugitive dust from disturbed areas due to grading, excavating, and construction at the site and heavy equipment emissions. A particulate matter emission factor of 0.11 ton of PM_{10} per acre per month was used to estimate fugitive dust emissions (MRI, 1996). The construction schedule calls for approximately the following maximum amounts of acreage to be disturbed during various construction phases (these are not cumulative acres):

Months 1-2: 73.7 acres
Months 3-5: 35.9 acres
Months 6-20: 38.0 acres
Months 21-24: 2.6 acres

The sites and related preparations include: construction trailer and parking lot, construction laydown area, power block area, switchyard, plant access road, transmission line, water supply pipeline, and Teresa Creek bridge.

Based on the 24-month construction schedule, the worst-case monthly emissions would occur during the first and second months of construction when 73.7 acres of land are disturbed. This would result in uncontrolled emissions of approximately 8.11 tons of PM_{10} per month. Assuming 90 percent control efficiency from the fugitive dust suppression program outlined above to mitigate construction related emissions, the controlled worst-case construction dust emissions are estimated to be 7.4 lb/hour, 74 lb/day, 0.81 tons/month and approximately 5.7 tons/year, based on the average disturbed land acreage listed above for Months 1 through 12.

Estimated Controlled Emissions from Site Preparation			
Scenario	**Time period**	**Units**	**PM_{10}**
Worst case months 1-12	Annual	Tons	5.7
Worst case month 1	Monthly	Tons	0.81
Worst case 24 hours	Daily	Pounds	74.0
Worst case 1 hour	Hourly	Pounds	7.4

Another source of PM_{10} dust emissions from the project construction phase includes earth moving with heavy equipment. Controlled PM_{10} emissions of fugitive dust from this activity come from the several pieces of equipment listed in the table below. A second source of emissions during construction is equipment exhaust. Emissions from equipment would occur over a 24-month construction period.

	Controlled Fugitive Dust as PM_{10} Emissions from Earth Moving					
Construction Equipment	**Source**	**Lbs/Month 1**		**Lbs/Month 2**		**Lbs/Month 3**
Excavator Loader	Loading trucks	420.9		210.4		210.4
Excavator Backhoe	Unloading trucks	22.8		11.4		11.4
Dozer Tractor Crawler	Unpaved roads	766.9		383.5		383.5
Front End Loader	Bulldozing	224.6		224.6		224.6
Trenching Machine	TOTAL	1,435.2		829.9		829.9
Excavator Motor Grader						
Vibrating Plate Compactor	**Estimated Emissions From Construction Equipment Exhaust**					
Roller Vibrator	Worst Case	NOx	CO	VOCs	SOx	PM_{10}
Water Truck	Lbs/Hour	33	19.7	5.8	0.03	2.2
Concrete Mixer	Lbs/Month	6,589.70	3,941.50	1,166.4	6.2	447.6
Concrete Pump, trailer mount	Lbs/Year	66,110.50	39,157.60	11,661.20	61.1	4,624.1
Mortar Mixer	Worst-case hourly emissions estimated by dividing worst-case monthly by 200 hours (20 days of 10 hours)					
Paving Machine	Worst-case annual emissions were estimated by summing emissions for each 12-month period					
Dump Truck						
Cranes (6-500 tons)	**Estimated Peak PM_{10} Emissions During Construction**					
Manlift, telescoping	Worst Case Scenario	Fugitive Dust		Exhaust		Total PM_{10}
Welder (250 amp)	Lbs/Hour	15.3		1.6		16.9
AirCompressors(185-750cfm)	Lbs/Day	152.83		16.38		169.2
Generator (6 kW)	Lbs/Month	3,056.60		327.6		3,384.20
Forklifts (2-4 tons)	Lbs/Year	14,532		4,624		19,156
Fuel/Lube Truck	Exhaust PM_{10} peak month does not occur in same month as Fugitive Dust Emissions peak month.					
Pickup Truck (1/2-ton)	Total emissions were based on projected daily hours of equipment operation in a given month.					
Stakebed Truck						
Hydraulic Boom Truck						
Concrete Trowel						
Concrete Floor Saw						
Bobcat Skip Loader						

Hydrotest Pump	

Operational Emissions

Operational equipment emissions covered are from the two turbines, under various operating conditions, the auxiliary boiler, emergency generator engine and firewater pump engine. A description of the various turbine operational scenarios and emissions are included in the following tables.

Gas Turbines

Emissions from the two turbines were estimated for all applicable scenarios using base emission rates and startup/shutdown emissions. The base criteria pollutant emission rates provided by the turbine vendor and the engineer for three load conditions (50 , 75 , and 100 percent) and three ambient temperatures (18°F, 59°F, and 114°F).

Estimated Emission Rates for Gas Turbines and SCR with Ammonia Injection Normal Operation (pounds/hour - two turbines)

Load	Pollutant	Ambient Temperature 18°F	59°F	114°F
100%	VOCs	6.8	6.2	6.0
	Ammonia Slip	28.4	26.2	25.0
	CO	28.0	26.0	24.6
	NO_X	30.6	28.4	27.0
	SO_2	12.0	11.0	11.0
	PM_{10}	25.8	25.6	25.6
75%	VOCs	5.4	5.0	5.0
	Ammonia Slip	22.8	21.2	20.4
	CO	22.6	21.0	20.0
	NO_X	24.6	23.0	22.0
	SO_2	10.0	9.0	9.0
	PM_{10}	25.4	25.4	25.2
50%	VOCs	4.4	4.2	4.2
	Ammonia Slip	18.0	16.8	15.8
	CO	17.8	16.6	15.6
	NO_X	19.4	18.2	17.2
	SO_2	8.0	7.0	7.0
	PM_{10}	25.2	25.0	25.0
100% with Duct Burners	VOCs	14.4	13.6	13.2
	Ammonia Slip	38.4	36.4	35.2
	CO	37.8	35.8	34.8
	NO_X	41.4	39.2	38.0
	SO_2	16.0	15.0	15.0
	PM_{10}	40	39.8	40.2

Startup and shutdown events typically have higher emission rates than normal operating conditions.

Estimated Emission Rates for One Gas Turbine During Startup and Shutdown

	Cold Startup		Warm Startup		Hot Startup		Shutdown	
	270 Minutes		180 Minutes		90 Minutes		30 Minutes	
Pollutant	Max lb/hour	Total lb/270 min	Max lb/hour	Total lb/180 min	Max lb/hour	Total lb/90 min	Max lb/hour	Total lb/30 min

NO_X	333.3	779.10	152.00	456.20	249.90	259.90	115.00	115.00
CO	373.60	1355.60	370.30	790.50	429.60	679.60	483.50	483.50
VOCs	27.7	106.70	27.7	47.40	27.7	38.00	23.9	23.90
SO_2	2.0	5.05	2.0	2.88	2.0	1.66	1.0	1.0
PM_{10}	12.00	48.80	12.00	30.80	12.00	12.80	6.00	6.00

The number of startups was estimated for each quarter. To calculate quarterly emissions, emissions from these startups were added to operational emissions, assuming 100 percent load and 59°F for the specified number of hours per quarter and duct burner operation at 59°F for the specified number of hours. The analysis is conservative because no credit was taken for downtime associated with each shutdown.

Estimated Quarterly and Annual Emissions for Two Turbines					
Pollutant	**1st Quarter Emissions (tons)**	**2nd Quarter Emissions (tons)**	**3rd Quarter Emissions (tons)**	**4th Quarter Emissions (tons)**	**Annual Emissions (tons)**
NO_X	45.1	43.1	50.9	43.8	182.9
CO	53.4	51.6	106.3	53.1	264.4
VOCs	12.3	11.6	11.8	11.7	47.4
PM_{10}	35.1	35.2	35.4	35.5	141.2
SO_2	4.05	3.83	3.87	3.87	15.62

Worst-case short-term emissions from the turbines were calculated for use in the air quality modeling. For worst 1-hour emissions, the worst-case startup condition was used. Based on the startup information, NO_X, CO, and VOC emissions during a cold startup are the worst-case condition. PM_{10} and SO_X emissions are maximized at peak fuel usage. The maximum amount of fuel is used when the turbines and duct burners are running 100 percent and the ambient temperature is 18°F.

The 24-hour NO_X, CO, and VOC emission rates were calculated assuming six hours of startup (3 hot starts and stops), and the balance (18 hours) operating at the worst-case operating condition (turbine and duct burners are running 100 percent and the ambient temperature is 18°F). PM_{10} and SO_X worst-case 24-hour emission rates were calculated assuming the turbine and duct burners are running at 100 percent for 24 hours and the ambient temperature is 18°F for SO_X and 114°F for PM_{10}.

Estimated Worst-Case Short-Term Emission (per turbine excluding commissioning)	
1-Hour Emissions (lb/hour)	
NO_X	333.30
CO	483.50
VOCs	27.7
PM_{10}	20.1
SO_2	7.4
24-Hour Emissions (lb/day)	
NO_X	1,497.30
CO	3,829.50
VOCs	315.30
PM_{10}	482.4
SO_2	177.6

The gas turbine commissioning period has a unique emissions profile because the air pollution control equipment is not fully functional. The gas turbine commissioning periods begin when the turbines first burn natural gas. Every reasonable effort will be made to minimize CO, VOC, and NO_x emissions during the commissioning period. Cold, pre-operational equipment checks will be required. However, these checks will not require the equipment to be running or emitting air pollutants. The applicant proposes a

commissioning period of approximately 6 months during which all installed equipment will be run and tested. Applicant requests 500 hours maximum of partially abated emissions for each gas turbine train.

Once installed, the oxidation catalyst in each train will abate CO and VOC emissions from the gas turbine and the duct burners because it is essentially a passive device. While the SCR catalyst can in some cases be installed prior to initial startup of the combustion turbines, it may not be installed until later in the commissioning period, after completion of steam blows, which could deposit debris and otherwise damage the catalyst.

The SCR catalyst may not be installed at the same time as the oxidation catalyst. NO_x emissions from the gas turbines and the duct burners may be only partially abated during times that the gas turbine burners are being tuned and the SCR system is being tested. Regardless of the fact that the oxidation catalyst and SCR may not be installed until late in the commissioning process, the inherent low emissions of NO_x, CO, and VOCs associated with the DLN combustors will ensure that the impacts of these emissions are minimized.

The commissioning period will be divided into four phases:

1. Gas combustion turbine 1 (CT#1) duct burner (DB#1);
2. Gas combustion turbine 2 (CT#2) duct burner (DB#2);
3. Commissioning of both HRSGs and the steam turbine; and
4. Performance and reliability testing of the entire plant together

Commissioning emission estimates were conservatively estimated as worst case by assuming that the control efficiency of the applicable abatement systems is essentially zero during significant portions of the commissioning phase. The CEMS will also undergo commissioning at this time. Once the CEMS is commissioned, it will record emissions of NO_x and CO. Emissions of SO_2 and PM_{10} may be quantified by using emission factors based on fuel flow. Peak emission rates of CO and NO_x will only occur from one gas turbine at a time. Where applicable, emission offsets are proposed as mitigation of the emissions.

Commissioning Emissions	**Unit**	**Load**	**Time (hrs)**	**SO_X (lb/hr)**	**NO_X (lb/hr)**	**CO (lb/hr)**	**VOC (lb/hr)**	**PM_{10} (lb/hr)**
Phase Tests								
First fire	CT # 1	10.0%	4.0	0.3	146.0	250.0	24.2	12.0
	CT # 2	10.0%	4.0	0.3	146.0	250.0	24.2	12.0
Green rotor run-in	CT # 1	25.0%	12.0	0.4	217.3	1,287.3	47.1	12.0
	CT # 2	25.0%	12.0	0.4	217.3	1,287.3	47.1	12.0
Steam blows	CT # 1	25.0%	168.0	0.4	217.3	1,287.3	47.1	12.0
	CT # 2	25.0%	168.0	0.4	217.3	1,287.3	47.1	12.0
Restoration	CT # 1	n/a	n/a	n/a	n/a	n/a	n/a	n/a
	CT # 2	n/a	n/a	n/a	n/a	n/a	n/a	n/a
Turbine roll/ overspeed	CT # 1	10.0%	16.0	0.3	146.0	250.0	24.2	12.0
	CT # 2	10.0%	16.0	0.3	146.0	250.0	24.2	12.0
Part load DLN tuning	CT # 1	50.0%	12.0	0.6	475.0	808.0	8.2	12.0
	CT # 1	100.0%	18.0	0.9	58.0	29.0	2.8	12.0
	CT # 2	50.0%	12.0	0.6	475.0	808.0	8.2	12.0
	CT # 2	100.0%	18.0	0.9	58.0	29.0	2.8	12.0

Commissioning Emissions Phase Tests	Unit	Load	Time (hrs)	SO_X (lb/hr)	NO_X (lb/hr)	CO (lb/hr)	VOC (lb/hr)	PM_{10} (lb/hr)
Outage/ Water Wash	CT # 1	n/a	n/a	n/a	n/a	n/a	n/a	n/a
	CT # 2	n/a	n/a	n/a	n/a	n/a	n/a	n/a
Fine DLN tuning/ Finalize control constants	CT # 1	50.0%	40.0	0.6	475.0	808.0	8.2	12.0
	CT # 1	75.0%	24.0	0.7	58.0	29.0	2.8	12.0
	CT # 1	100.0%	96.0	0.9	58.0	29.0	2.8	12.0
	CT # 2	50.0%	40.0	0.6	475.0	808.0	8.2	12.0
	CT # 2	75.0%	24.0	0.7	58.0	29.0	2.8	12.0
	CT # 2	100.0%	96.0	0.9	58.0	29.0	2.8	12.0
Duct burners and safety valves	CT # 1	100.0%	144.0	0.9	58.0	29.0	2.8	12.0
	CT # 2	100.0%	144.0	0.9	58.0	29.0	2.8	12.0
	DB # 1	50.0%	24.0	0.2	23.9	23.9	3.0	3.0
	DB # 1	100.0%	96.0	0.3	47.9	47.9	6.0	6.0
	DB # 2	50.0%	24.0	0.2	23.9	23.9	3.0	3.0
	DB # 2	100.0%	96.0	0.3	47.9	47.9	6.0	6.0
Outage (strainers/ catalyst, etc.)	CT # 1	n/a	n/a	n/a	n/a	n/a	n/a	n/a
	CT # 2	n/a	n/a	n/a	n/a	n/a	n/a	n/a
	DB # 1	n/a	n/a	n/a	n/a	n/a	n/a	n/a
	DB # 2	n/a	n/a	n/a	n/a	n/a	n/a	n/a
CEMS drift and Source testing	CT # 1	100.0%	64.0	0.9	12.8	11.6	2.0	12.0
	CT # 2	100.0%	64.0	0.9	12.8	11.6	2.0	12.0
	DB # 1	100.0%	64.0	0.3	10.5	19.2	4.2	6.0
	DB # 2	100.0%	64.0	0.3	10.5	19.2	4.2	6.0
Functional tests	CT # 1	100.0%	96.0	0.9	12.8	11.6	2.0	12.0
	CT # 2	100.0%	96.0	0.9	12.8	11.6	2.0	12.0
	DB # 1	100.0%	96.0	0.3	10.5	19.2	4.2	6.0
	DB # 2	100.0%	96.0	0.3	10.5	19.2	4.2	6.0
Outage/ Water Wash	CT # 1	n/a	n/a	n/a	n/a	n/a	n/a	n/a
	CT # 2	n/a	n/a	n/a	n/a	n/a	n/a	n/a
	DB # 1	n/a	n/a	n/a	n/a	n/a	n/a	n/a
	DB # 2	n/a	n/a	n/a	n/a	n/a	n/a	n/a
Performance test	CT # 1	100.0%	24.0	0.9	12.8	11.6	2.0	12.0
	CT # 2	100.0%	24.0	0.9	12.8	11.6	2.0	12.0
	DB # 1	100.0%	24.0	0.3	10.5	19.2	4.2	6.0
	DB # 2	100.0%	24.0	0.3	10.5	19.2	4.2	6.0

Commissioning Emissions Phase Tests	Unit	Load	Time (hrs)	SO_X (lb/hr)	NO_X (lb/hr)	CO (lb/hr)	VOC (lb/hr)	PM_{10} (lb/hr)
Continuous operation test	CT # 1	100.0%	192.0	0.9	12.8	11.6	2.0	12.0
	CT # 2	100.0%	192.0	0.9	12.8	11.6	2.0	12.0
	DB # 1	100.0%	192.0	0.3	10.5	19.2	4.2	6.0
	DB # 2	100.0%	192.0	0.3	10.5	19.2	4.2	6.0

Totals for CGS Commissioning	Oxides of Sulfur	Oxides of Nitrogen	Carbon Monoxide	Volatile Organics	Particulate PM_{10}
Pounds lbs/hour*time	12,000	194,021.2	607,266.1	26,273.3	27,633.6
Tons	6.0	97.0	303.6	13.1	13.8
Tons/CT & DB	3.0	48.5	152	6.75	7

Auxiliary Boiler

Auxiliary boiler emissions are based on 3,744 hours of operation per year. A summary of auxiliary boiler emissions is presented in table below.

Auxiliary Boiler Emissions			
Pollutant	Emission Factors (lb/MMBtu)	Emissions	
		lb/hr	ton/yr
NO_X	0.018	0.79	1.48
CO	0.037	1.61	3.01
PM_{10}	0.0075	0.33	0.62
SO_2	NA	0.13	0.07
VOC	0.0042	0.18	0.34

Emergency Generator Engine

The project will include one 1,340 brake hp diesel fired engine to power an emergency, backup electrical generator. The applicant proposes a USEPA Tier 2 and CARB-Certified candidate engine for this application. Annual emissions from the engine included in the table are based on a maximum non-emergency use rate of 50 hours of operation per year. SO_2 emissions were estimated using ultra-low sulfur diesel fuel containing 15ppm sulfur. The manufacturer estimated emissions for NO_X, CO, PM_{10}, and VOCs.

Non-Emergency Emissions	Generator
Estimated brake horsepower	1,340
	Hourly Emissions (pounds)
NO_X	13.88
CO	0.32

VOCs	0.15
PM_{10}	0.09
SO_2	0.01
Annual Emissions (tons)	
NO_X	0.347
CO	0.008
VOCs	0.004
PM_{10}	0.002
SO_2	0.0003

Firewater Pump Engine

One 300 brake hp diesel engine will be purchased to power a firewater pump. The applicant also proposes a USEPA Tier 3 and CARB-Certified candidate engine for this application. SO_2 emissions were estimated using ultra-low sulfur diesel fuel containing 15 ppm sulfur. Emissions were estimated based on hourly emission rates provided by the manufacturer for NO_X, CO, PM_{10}, and VOCs. Annual emissions from these engines included in the table are based on a maximum non-emergency use rate of 50 hours of operation per year.

Non-Emergency Emissions	**Firewater Pump**
Estimated brake horsepower	300
Hourly Emissions (pounds)	
NO_X	1.98
CO	1.72
VOCs	Included in NOx
PM_{10}	0.10
SO_2	<0.01
Annual Emissions (tons)	
NO_X	0.05
CO	0.04
VOCs	Included in NOx
PM_{10}	0.0025
SO_2	0.0003

Combined Emissions

Total combined annual emissions are shown below. The table includes emissions from two gas turbines, duct burners, auxiliary boiler, and emergency generator and emergency firewater pump engines.

Quarterly and Annual Estimated Combustion Emissions from CGS Facility					
Pollutant	**1st Quarter Emissions (tons)**	**2nd Quarter Emissions (tons)**	**3rd Quarter Emissions (tons)**	**4th Quarter Emissions (tons)**	**Annual Emissions (tons)**
NO_X	45.77	43.77	51.57	44.47	185.58
CO	55.35	53.55	108.25	55.05	272.20
VOCs	12.51	11.81	12.01	11.91	48.24
PM_{10}	35.36	35.46	35.66	35.76	142.24
SO_2	4.05	3.83	3.87	3.87	15.62

Toxic Air Contaminant Emissions

Facility operations at the proposed Colusa Generating Station were evaluated to determine whether toxic substances would be used or generated that may cause adverse health effects if released to the air. The primary sources of potential emissions from facility operations are the natural gas fired CTGs and the aqueous ammonia used in the SCR control system located in the HRSGs. Natural gas combustion in the auxiliary boiler is also a source of potential emissions. The diesel fuel combusted in the two emergency engines (i.e., generator and fire pump) produces air toxic contaminants. Ammonia emissions associated with potential ammonia slip from the SCR system were also included as well as all air toxics associated with the auxiliary boiler, diesel generator, and the diesel firewater pump.

Gas Turbines

Conservative assumptions were made for estimating air toxic emissions. These assumptions may not be consistent in all cases with the assumptions made for estimating emissions of criteria pollutants. However, they result in higher estimated emissions than the assumptions used in the air quality section. Worst-case estimates of annual turbine emissions were made by assuming that both turbines would operate simultaneously under full load conditions (100 percent load at 59°F annual average) for 8,760 hours per year with full duct burner firing. The exit temperature and velocity for each turbine stack used in the model represented the 100 percent load, with duct firing, at 59°F ambient temperature operating mode. Ammonia slip emissions were estimated to be 5 ppmvd at 15% oxygen. For maximum hourly emissions, the maximum natural gas consumption rate of about 2,452 MMBtu (higher heating value) per hour per combustion turbine including duct burners was used represented the 100 percent load, with duct firing, at 59°F ambient temperature operating mode. Estimated emissions shown below:

Emissions from CTG/HRSG with SCR and Oxidation Catalyst

Chemical Species	Emission Factor (lb/MMBtu)	Emission Factor (lb/MMcf)	Maximum Hourly Emissions per CTG (lb/hour)	Annual Emissions Per CTG (lb/year)
Ammonia	5 ppm[c]	5 ppm[c]	18.20	1.59E+05
1,3-Butadiene	1.24E-07	1.27E-04	3.04E-04	2.66E+00
Acetaldehyde	1.34E-04	1.37E-01	3.28E-01	2.87E+03
Acrolein	1.85E-05	1.89E-02	4.53E-02	3.96E+02
Benzene	1.30E-05	1.33E-02	3.18E-02	2.79E+02
Ethylbenzene	1.75E-05	1.79E-02	4.29E-02	3.75E+02
Formaldehyde	8.96E-04	9.17E-01	2.20	1.92E+04
Hexane	2.53E-04	2.59E-01	6.20E-01	5.43E+03
Propylene	7.53E-04	7.71E-01	1.85	1.62E+04
Propylene oxide	4.67E-05	4.78E-02	1.14E-01	1.00E+03
Toluene	6.93E-05	7.10E-02	1.70E-01	1.49E+03
Xylenes	2.55E-05	2.61E-02	6.25E-02	5.47E+02
Polycyclic Aromatic Hydrocarbons			Total Lbs	206,790
Benzo(a)anthracene	2.21E-08	2.26E-05	5.41E-05	4.74E-01
Benzo(a)pyrene	1.36E-08	1.39E-05	3.98E-05	1.32E-01
Benzo(b)fluoranthene	1.10E-08	1.13E-05	2.71E-05	2.37E-01
Benzo(k)fluoranthene	1.07E-08	1.10E-05	2.63E-05	2.31E-01
Chrysene	2.46E-08	2.52E-05	6.03E-05	5.29E-01
Dibenz(a,h)anthracene	2.29E-08	2.35E-05	5.63E-05	4.93E-01
Indeno(1,2,3-cd)pyrene	2.29E-08	2.35E-05	5.63E-05	4.93E-01

Emissions from CTG/HRSG with SCR and Oxidation Catalyst

Chemical Species	Emission Factor (lb/MMBtu)	Emission Factor (lb/MMcf)	Maximum Hourly Emissions per CTG (lb/hour)	Annual Emissions Per CTG (lb/year)
Naphthalene	1.62E-06	1.66E-03	3.97E-03	3.48E+01

Auxiliary Boiler

Emission factors for the natural gas fired auxiliary boiler were obtained from the CATEF Database (CARB 2001). Annual emissions were calculated based on 3,744 hours per year. Emission factors and estimated maximum hourly and annual auxiliary boiler emissions are summarized in the following table.

Emissions from Auxiliary Boiler

Chemical Species	Emission Factor (lb/MMBtu)	Emission Factor (lb/MMcf)	Maximum Hourly Emissions (lb/hour)	Annual Emissions (lb/year)
Acetaldehyde	8.66E-06	8.87E-03	3.81E-04	1.43E+00
Benzene	4.21E-06	4.31E-03	1.85E-04	6.94E-01
Formaldehyde	2.16E-04	2.21E-01	9.50E-03	3.56E+01

Emergency Generator Engine

Toxic emissions from the diesel generator engine were estimated using the PM_{10} emissions as a surrogate for the toxic compound, diesel exhaust. Emergency diesel generator emissions were estimated assuming it would run at its full rated capacity (1,340 hp) for 1 hour per week for emergency preparedness. Emissions are summarized in the table.

Emissions from Emergency Generator

Source	Chemical Species	Emission Factor (grams/hp-hour)	Maximum Hourly Emissions (lb/hour)	Annual Emissions (lb/year)
Emergency Generator	Diesel particulate (PM_{10})	0.13	3.84E-01	1.92E+01

Firewater Pump Engine

Toxic emissions from the diesel firewater pump engine were estimated using the PM_{10} emissions as a surrogate for the toxic compound, diesel exhaust. Emergency diesel firewater pump emissions were estimated assuming it would run at its full rated capacity (300 hp) for 1 hour per week for emergency preparedness. Emissions are summarized in the table.

Emissions from Emergency Firewater Pump

Source	Chemical Species	Emission Factor (grams/hp-hour)	Maximum Hourly Emissions (lb/hour)	Annual Emissions (lb/year)
Emergency Firewater Pump	Diesel particulate (PM_{10})	0.13	8.59E-02	4.30E+00

The air toxic emissions presented in the above tables were used in estimating the potential public health risks due to operation of the proposed equipment and the results of the Health Risk Assessment (HRA). Significant impacts are defined as a maximum incremental cancer risk greater than ten in one million population, a chronic Threshold Hazard Index (THI) over one, or an acute THI over one.

VI AIR QUALITY CONCENTRATIONS

The US Environmental Protection Agency (EPA), in response to the federal Clean Air Act of 1970, established federal Ambient Air Quality Standards (AAQS) in Title 40 Code of Federal Regulations (CFR) Part 50. The federal AAQS include both primary and secondary standards for six "criteria" pollutants. These criteria pollutants are ozone, carbon monoxide (CO), nitrogen dioxide (NO_2), sulfur dioxide (SO_2), ten micron particulate (PM_{10}), and lead. Primary standards were established to protect human health, and secondary standards were designed to protect property and natural ecosystems from the effects of air pollution.

The 1990 Clean Air Act Amendments established attainment deadlines for all designated areas that were not in attainment with the federal AAQS. In addition to the federal EPA AAQS described above, a new federal standard for $PM_{2.5}$ and a revised ozone standard were promulgated in July 1997. In a court case filed in1998 these new AAQS issues were resolved and the 1-hour ozone standard was revoked in 2005 while the revised $PM_{2.5}$ standard was made effective in 2006. The State of California Air Resources Board (ARB) has adopted AAQS that are in some cases more stringent than the federal AAQS. The state and federal AAQS relevant to the CGS are summarized in the table.

Federal and California Ambient Air Quality Standards				
Pollutant	**Averaging Time**	**California AAQS[a,b]**	**Federal AAQS[b,c]**	
			Primary	**Secondary**
Ozone	1-hour	0.09 ppm (180 μg/m^3)		Same as primary standard
	8-hour[d]	0.07 ppm (137 μg/m^3)	0.08 ppm (157 μg/m^3)	
Carbon Monoxide (CO)	8-hour	9 ppm (10 mg/m^3)	9 ppm (10 mg/m^3)	NA
	1-hour	20 ppm (23 mg/m^3)	35 ppm (40 mg/m^3)	
Nitrogen Dioxide (NO_2)[e]	Annual (Arithmetic Mean)	NA	0.053 ppm (100 μg/m^3)	Same as primary standard
	1-hour	0.25 ppm (470 μg/m^3)	NA	
Sulfur Dioxide (SO_2)	Annual (Arithmetic Mean)	NA	0.03 ppm (80 μg/m^3)	NA
	24-hour	0.04 ppm[f] (105 μg/m^3)	0.14 ppm (365 μg/m^3)	NA
	3-hour	NA	NA	0.05 ppm (1,300 μg/m^3)
	1-hour	0.25 ppm (655 μg/m^3)	NA	NA
Respirable Particulate Matter (PM_{10})	Annual (Geometric Mean)	20 μg/m^3 [h]	NA [g]	Same as primary standard
	24-hour	50 μg/m^3	150 μg/m^3	
	Annual (Arithmetic Mean)	NA	NA	
Fine Particulate Matter ($PM_{2.5}$)[d]	24-hour	NA	35 μg/m^3 [g]	Same as primary standard
	Annual (Arithmetic Mean)	12 μg/m^3 [g]	15 μg/m^3	
Visibility Reducing Particles	1 observation	See footnote h.	No federal standard	No federal standard
Notes:				

Federal and California Ambient Air Quality Standards
[a] Title 17, California Code of Regulations, California AAQS for ozone (as VOCs), CO, SO_2 (1-hour), NO_2, and (PM_{10} are values that are not to be exceeded. The visibility standard is not to be equaled or exceeded. [b] 40 CFR 50. National AAQS, other than those for ozone and based on annual averages, are not to be exceeded more than once a year. The ozone standard is attained when the expected number of days per calendar year with maximum hourly average concentrations above the standard is equal to or less than 1. [c] Concentrations are expressed first in units in which they were promulgated. Equivalent units are given in parentheses and based on a reference temperature of 25°C and a reference pressure of 760 mm of mercury. All measurements of air quality area to be corrected to a reference temperature of 25°C and a reference pressure of 760 mm of mercury (1,013.2 millibar); ppm in this table refers to ppm by volume, or micromoles of pollutant per mole of gas. [d] USEPA promulgated new federal 8-hour ozone and $PM_{2.5}$ standards on July 18, 1997. The federal 1-hour ozone standard continues to apply in areas that violated the standard. [e] NO_2 is the compound regulated as a criteria pollutant; however, emissions are usually based on the sum of all NO_X. [f] At locations where the state standards for ozone and/or PM_{10} are violated. National standards apply elsewhere. [g] The federal (PM_{10} standard was revoked on September 22, 2006. The $PM_{2.5}$ standard was modified on September 22, 2006. The California PM_{10} standard was modified and a new $PM_{2.5}$ standard promulgated on July 5, 2003. [h] Insufficient amount to reduce the prevailing visibility to less than 10 miles when the relative humidity is less than 70 percent. "Prevailing visibility" is defined as the greatest visibility, which is attained or surpassed around at least half of the horizon circle, but not necessarily in continuous sectors. NA= not applicable mg/m^3= milligram(s) per cubic meter $\mu g/m^3$ = microgram(s) per cubic meter ppm = part(s) per million

The EPA, ARB, and the local air pollution control districts determine air quality attainment status by comparing local ambient air quality measurements from the state or local ambient air monitoring stations with the federal and California AAQS. Those areas that meet AAQS are classified as "attainment" areas; areas that do not meet the standards are classified as "nonattainment" areas. Areas that have insufficient air quality data may be identified as unclassifiable areas. These attainment designations are determined on a pollutant-by-pollutant basis. The Colusa County Air Pollution Control District is designated a state nonattainment area for PM_{10} and ozone based on air quality monitoring data showing exceedances of the State standards. The table below presents the status (both federal and State) for Colusa County.

Federal and State Air Quality Status for Colusa County*

Pollutant	Federal Attainment Status	State Attainment Status
Ozone	Unclassifiable/Attainment	Nonattainment/Transitional**
CO	Unclassifiable/Attainment	Unclassified*
NO_2	Unclassifiable/Attainment	Attainment
SO_2	Unclassifiable	Attainment
PM_{10}	Unclassifiable	Nonattainment
$PM_{2.5}$	Unclassifiable/Attainment	Unclassified*

Notes:
* Attainment status obtained from 40 CFR 81.
** Proposed designations for 2006.

California Designations:

Unclassified: a pollutant is designated unclassified if the data are incomplete and do not support a designation of attainment or non-attainment.

Attainment: a pollutant is designated attainment if the state standard for that pollutant was not violated at any site in the area during a three year period.

Non-attainment: a pollutant is designated non-attainment if there was at least one violation of a State standard for that pollutant in the area.

Non-attainment/Transitional: is a subcategory of the non-attainment designation. An area is designated

non-attainment/transitional to signify that the area is close to attaining the standard for that pollutant.

Federal EPA Designations:

Non-attainment: any area that does not meet (or that contributes to ambient air quality in a nearby area that does not meet) the national primary or secondary ambient air quality standard for the pollutant.

Attainment: any area (other than an area identified in clause (i)) that meets the national primary or secondary ambient air quality standard for the pollutant.

Unclassifiable: any area that cannot be classified on the basis of available information as meeting or not meeting the national primary or secondary ambient air quality standard for the pollutant.

Background Ambient Air Quality Data Used in Modeling Analyses				
Pollutant	**Site**	**Year**	**Averaging Time**	**Concentration**
Nitrogen Dioxide	Yuba City – Almond Street Station	2003	Annual average	0.014 ppm
Nitrogen Dioxide	Yuba City – Almond Street Station	2004-2005 average	Max 1 hour average	0.064 ppm
Sulfur Dioxide	Sacramento – Del Paso Manor Station	2003	Annual average	0.001 ppm
Sulfur Dioxide	Sacramento – Del Paso Manor Station	2003	Max 24 hour average	0.003 ppm
Carbon Monoxide	Yuba City – Almond Street Station	2005	Max 8 hour average	3.39 ppm
Carbon Monoxide	Yuba City – Almond Street Station	2004	Max 1 hour average	5.8 ppm
Particulate $Matter_{10}$	Colusa – Sunrise Boulevard Station	2005	Annual Arithmetic Mean	25.5 $\mu g/m^3$
Particulate $Matter_{10}$	Colusa – Sunrise Boulevard Station	2005	Max 24 hour average	92 $\mu g/m^3$
Particulate $Matter_{2.5}$	Colusa – Sunrise Boulevard Station	2005	3-Year Maximum Annual Arithmetic Mean	11 $\mu g/m^3$
Particulate $Matter_{2.5}$	Colusa – Sunrise Boulevard Station	2005	3-yr Ave. 98th Percentile, Max 24 hour average	26 $\mu g/m^3$

Air Dispersion Modeling

The purpose of the air dispersion modeling analysis is to demonstrate that air emissions from the CGS will not cause or contribute to exceeding any State or federal AAQS and will not negatively impact visibility in Class I areas, and to evaluate impacts relative to applicable the Prevention of Significant Deterioration (PSD) increments. The modeling addresses emissions from construction activities and routine plant operations. The impacts from construction activities include fugitive dust and emissions associated with combustion byproducts from diesel and gasoline fueled equipment. The impacts from routine plant operations are associated with combustion byproducts from the turbines, duct burners, auxiliary boiler, and the two emergency diesel engines. Separate modeling analyses were performed for the construction and the plant operation sources because they will occur during different time periods and have different emission rates. The modeling approach for assessing the CGS impacts is discussed below.

The modeling was conducted using the American Meteorological Society/Environmental Protection Agency Regulatory Model (AERMOD) (USEPA 2004). For this analysis, AERMOD was selected, because it is consistent with the most recent USEPA policy and the data needed to support its application are available in Colusa County. AERMOD was run with the following additional options: Final plume rise at all receptors, Stack-tip downwash, Buoyancy-induced dispersion, Calms processing, Default wind profile exponents, Default vertical potential temperature gradients, and Rural dispersion coefficients. The effect of building wakes (i.e., downwash) on the stack plumes was evaluated for the routine plant operating emissions (downwash is not applicable to area sources, i.e., construction activities) in accordance with USEPA guidance (USEPA 1985).

Meteorological data suitable for input to AERMOD were obtained from a meteorological observation station, outside the town of Maxwell (population about 1,300), located approximately 8 miles south of the CGS project site. The 5 years of meteorological data to be used in this modeling analysis include data from 2001 through 2005. Supplemental cloud cover data from Red Bluff were also used.
AERMOD used the following receptor spacing:

25-meter spacing along the property line and extending from the property line out to 100 meters
100-meter spacing within 1 km of project sources for any locations not covered by the 25-meter grid
500-meter spacing within 1 to 5 km of project sources
1,000-meter spacing within 5 to 10 km of project sources

If maximum concentrations are predicted where the grid spacing is less dense than 25 meter, a 25-meter spaced nested grid of receptors was placed surrounding the receptor where the maximum concentration was predicted. This nested grid extended out 500 m in all directions or until the next regular grid receptors was encountered. The receptor locations were designated using Universal Transverse Mercator (UTM) coordinates. Receptor elevations were obtained from U.S. Geological Survey 7.5-minute electronic data.

The modeling for the CGS required the determination of worst-case emissions scenarios for the following averaging periods and pollutants to demonstrate compliance with AAQS:
1-hour for CO, NO2, and SO2
3-hour for SO2
8-hour for CO
24-hour for PM10, PM2.5 and SO2
Annual for PM10, PM2.5, NO2, and SO2

Site Construction Modeling

For construction activities at the project site, it was assumed that the equipment exhaust emissions would be emitted from two volume sources within the construction zone. PM_{10} emissions from fugitive dust were modeled using two area sources. The area sources were placed to include the construction, laydown, and contractor parking areas. The worst-case hourly and annual emission rates were used to model short-term and annual emissions, respectively. Fugitive dust emissions were included for both annual and 24-hour PM_{10} impacts. The modeling parameters are shown below:

Construction Emissions Release Parameters for the Proposed Project			
	Stack Characteristics (for the Construction Zone)		
Equipment Exhaust Emissions Source	Release Height (m)	Horizontal Dimension (m)	Vertical Dimension (m)

Volume 1	10	58.14	2.326
Volume 2	10	37.21	2.326
Fugitive Dust Areas	**Release Height (m)**	**East-West Distance (m)**	**North-South Distance (m)**
Fugitive Dust Area 1	3	240	240
Fugitive Dust Area 1	3	150	150

The modeling results are presented in the top half of the second table below.

Turbine Impact Screening Modeling

Screening modeling was performed to determine which turbine operating modes (i.e., load level, duct burner firing, ambient temperature) produced "worst-case" impacts for each pollutant and averaging time.

The model simulated natural gas combustion emissions from two 19-foot-diameter 175-foot-tall stacks. The stacks were modeled as point sources at their proposed locations. The stack parameters for each of the 12 operating modes are shown in the table as well as the AERMOD modeling results.

Turbine Impact Screening Results												
	Winter Minimum (18°F)				**Yearly Average (59°F)**				**Summer Maximum (114°F)**			
CTG Load	**100%**	**100%**	**75%**	**50%**	**100%**	**100%**	**75%**	**50%**	**100%**	**100%**	**75%**	**50%**
Duct Burner Status	On	Off	Off	Off	On	Off	Off	Off	On	Off	Off	Off
Stack Velocity (ft/sec)	68.6	71	55.1	44.3	63.7	66	52.3	42.8	63.1	63.7	51.5	42
Stack Temperature (°F)	162	193	181	175	161	193	181	175	186	202	188	167
AERMOD Results ($\mu g/m^3$/grams per second)												
1-hour	14.54	12.46	15.29	22.37	15.38	12.69	16.62	23.24	13.61	12.65	15.85	**25.21**
3-hour	7.92	5.87	8.48	10.22	8.58	6.37	8.88	10.52	7.10	6.21	8.63	**11.37**
8-hour	4.70	4.46	5.26	7.63	5.29	4.58	5.70	7.98	4.67	4.55	5.44	**8.80**
24-hour	1.55	1.43	1.76	2.43	1.69	1.46	1.84	2.54	1.51	1.46	1.81	**2.80**
Annual	0.22	0.17	0.25	0.33	0.25	0.19	0.26	0.34	0.21	0.18	0.25	**0.37**
Bolded screening result represent maximum.												

Refined modeling was performed to identify off-site, criteria pollutant impacts from operational emissions of the proposed project. The modeling was performed as previously described. However, in addition to the turbine/HRSG, the generator and fire pump engines and auxiliary boiler were also included in the refined modeling analysis.

Based on the screening results, stack parameters from the 50 percent load, with no duct firing, at 114°F ambient temperature simulate worst-case 1-hour dispersion. These parameters were used in the modeling to provide a conservative value for the pollutant dispersion. Pollutant emission rates for warm startups and cold startups were applied to these dispersion impacts to represent worst-case, short-term impacts of CO (1-hour) and NO_2 (1-hour), respectively. The SO_2 1-hour impact was estimated using the actual emission rate and stack parameters for the 100 percent load, with duct firing, at 18°F ambient temperature operating mode. Annual average impacts were estimated using the stack parameters for the 100 percent load, with duct firing, at 59F ambient temperature operating mode. Annual emission rates for NO_2, PM_{10}, and SO_2, were used in the analysis. PM_{10} 24-hour impacts were based on the actual emission rate and stack parameters for the 100 percent load, with duct firing, at 114°F ambient temperature operating mode.

Short-term, worst-case emission rates are summarized in the table below.

Proposed Colusa Generating Station Project AERMOD Modeling Results (μg/m³)								
Pollutant	Averaging Period	Max Modeled Impact	PSDLevel[a] Significant Impact	Background[b] Concentration	Total Predicted Concentration	AAQS	UTM Coordinates	
							East (m)	North (m)
Construction Impacts								
CO	1-hour	1,354.7	NA	6,444	7,799	23,000	562,750	4,357,230
	8-hour	190.0	NA	3,768	3,958	10,000	563,060	4,357,131
NO_2	1-hour[c]	230.81	NA	120.3	351.1	470	562,750	4,357,230
	Annual[c]	8.40	NA	26.3	34.7	100	562,750	4,357,523
PM_{10}	24-hour	332.60	NA	92	424.6	50	563,060	4,357,131
	Annual	3.33	NA	25.5	28.8	20	562,750	4,357,523
$PM_{2.5}$	24-hour	26.61	NA	26	52.6	35	562,750	4,357,500
	Annual[d]	0.69	NA	11	11.7	12	562,750	4,357,523
SO_2	1-hour	2.06	NA	15.6	17.7	655	562,750	4,357,230
	3-hour[e]	0.69	NA	15.6	16.3	1,300	562,750	4,357,230
	24-hour	0.100	NA	7.8	7.9	105	563,060	4,357,131
	Annual	.0083	NA	2.6	2.6	80	562,750	4,357,523
Routine Plant Operation Impacts								
CO	1-hour	1,396	2,000	6,444	7,840	23,000	558,375	4,359,450
	8-hour	293	500	3768	4,061	10,000	558,325	4,359,325
NO_2	1-hour[c]	336.3	NA	120.3	456.6	470	558,800	4,353,925
	Annual[e]	0.64	1	26.3	27.0	100	562,750.2	4,357,572
PM_{10}	24-hour	4.35	5	92	96.4	50	562,600	4,357,800
	Annual	0.5	1	25.5	26.0	30	562,425	4,358,075
$PM_{2.5}$	24-hour[d]	2.73	NA	26	28.6	35	562,325	4,358,200
	Annual	0.51	NA	11	11.5	12	562,425	4,358,075
SO_2	1-hour	22.00	NA	15.6	37.6	655	558,350	4,359,500
	3-hour[e]	9.25	NA	15.6	24.9	1,300	559,025	4,355,700
	24-hour	1.75	NA	7.8	9.6	105	562,600	4,357,800
	Annual	0.06	NA	2.6	2.7	80	562,425	4,358,075

Proposed Colusa Generating Station Project AERMOD Modeling Results ($\mu g/m^3$)								
Pollutant	Averaging Period	Max Modeled Impact	PSDLevel[a] Significant Impact	Background[b] Concentration	Total Predicted Concentration	AAQS	UTM Coordinates	
							East (m)	North (m)

Notes:

[a] Source: 40 CFR 52.21.
[b] Background represents the maximum value measured at various air monitoring stations around the CGS site, 2003-2005 (except for 1-hour NO_2 which uses the arithmetic average of 2004-2005 measurements).
[c] Results used OLM to estimate NO_2 impacts.
[d] $PM_{2.5}$ results are 98th percentile and background is 3-year average, 98th percentile
[e] Background 3-hour SO_2 not reported, used 1-hr background

AAQS = Most stringent ambient air quality standard for the averaging period
NA = Not applicable
NR = Not reported
m = meters
OLM = ozone limiting method
$\mu g/m^3$ = micrograms per cubic meter
CO = carbon monoxide
NO_2 = nitrogen dioxide
PM_{10}= particulate matter less than or equal to 10 microns in diameter
SO_2 = sulfur dioxide

Fumigation occurs when a plume with pollution emissions that was originally emitted into a stable layer of air is mixed rapidly to ground level when unstable air below the plume reaches plume level. Fumigation can cause very high ground-level pollution concentrations. Fumigation can occur during the break up of the nocturnal radiation inversion by daytime solar warming of the ground surface. Such conditions are short-lived and are typically compared only with 1-hour standards. A fumigation analysis was performed using the USEPA SCREEN3 model. Fumigation impacts are summarized in the table.

Proposed Project Operations Fumigation Impact Results			
Pollutant	Source	Inversion Impact ($\mu g/m^3$)	Distance to Max. Impact (m)
NO_2 1 hour	Normal Operation Turbine	3.09	15,953
NO_2 1 hour	Turbine Startup	52.45	15,953
CO 1 hour	Normal Operation Turbine	76.09	15,953
CO 1 hour	Turbine Startup	2.82	15,953
SO_2 1 hour	Turbine – Normal Operations or Startup	1.25	15,953
SO_2 3 hour	Turbine – Normal Operations or Startup	1.25	15,953
Note: 1-hour SCREEN3 results multiplied by 0.9 to convert to 3-hour and 0.7 to convert to 8-hour.			

Fumigation impacts were estimated and summarized above. Fumigation impacts are all below PSD significance thresholds. Predicted Class 1 Area pollutant concentrations from the CGS project are compared to proposed and adopted significant impact levels (SILs) listed in the table. The maximum, modeled impacts are below applicable federal PSD SILs for all criteria pollutants.

Predicted Class I Area Pollutant Concentrations from CGS Compared to Proposed and Adopted Significant Impact Levels (µg/m3)						
	Maximum Predicted Concentration					
	NO_2[a]	PM_{10}		SO_2		
Class I and Other Areas of Interest	Annual Average	24-Hour Average	Annual Average	3-Hour Average	24-Hour Average	Annual Average

Predicted Class I Area Pollutant Concentrations from CGS Compared to Proposed and Adopted Significant Impact Levels (µg/m3)						
	Maximum Predicted Concentration					
	NO_2[a]	PM_{10}		SO_2		
Class I and Other Areas of Interest	**Annual Average**	**24-Hour Average**	**Annual Average**	**3-Hour Average**	**24-Hour Average**	**Annual Average**
USEPA Proposed SIL[b]	0.1	0.3	0.2	1	0.2	0.1
Federal Land Manager - Recommended SIL[b]	0.03	0.27	0.08	0.48	0.07	0.03
Class I Area PSD Increment[c]	2.5	8	4	25	5	2
CGS Maximum Impact	0.008	0.198	0.018	0.16	0.045	0.0015

Notes:

[a]NO was conservatively assumed to be 100 percent converted to NO_2.

[b]USEPA proposed and Federal Land Manager recommended from Federal Register, Vol. 61, No. 142, p. 38292, July 23, 1996.

[c]Adopted PSD level from 40 CFR 52.21(c).

VII COMPLIANCE ANALYSES

The Colusa County Air Pollution Control District Rules and Regulations contain various requirements that must be met by this proposed project. The rules are grouped into six basic categories 1) General requirements; 2) Authority to Construct; 3) Prohibitory Rules; 4) Air Toxics; 5) New Source Performance Standards; and 6) Title V Federal Operating Permit.

The District expects all general requirements, prohibitory rules, new source performance standards, air toxic policies and the Title V provisions to be met by the proposed facility.

GENERAL REQUIREMENTS

Regulation 1 – General Provisions, Rule 1.11 "Field Inspection" - Each source of air pollution subject to permit or registration shall be inspected or tested at such intervals of time so that no extended periods of violations will occur. *FINDING - this will be a permit condition*

Regulation 1 – General Provisions, Rule 1.12 "Air Pollution Equipment, Scheduled Maintenance" - In the case of shut-down or re-start of air pollution control equipment for necessary scheduled maintenance, the intent to shut down such equipment shall be reported to the Air Pollution Control Officer at least twenty-four (24) hours prior to the planned shutdown. *FINDING - this will be a permit condition*

Regulation 1 – General Provisions, Rule 1.13 "Equipment Breakdown" - In the event that any emission source, air pollution control equipment, or related facility breaks down in such a manner which may cause the emission of air contaminants in violation of this article, the person responsible for such equipment shall immediately notify the Air Pollution Control Officer of such failure or breakdown and subsequently a written statement giving all pertinent facts, including the estimated duration of the breakdown. The Air Pollution Control Officer shall be notified when the condition causing the failure or breakdown has been corrected and the equipment is again in operation. *FINDING - this will be a permit condition*

AUTHORITY TO CONSTRUCT

Regulation 3 – Permits, Rule 3.0 "General Requirements" - No person shall cause or permit the construction or modification of any new source of air contaminants without first obtaining an Authority to Construct from the Air Pollution Control Officer so as to comply with applicable regulations and rules and ambient air quality standards of the District. The Control Officer shall not approve such construction or modification unless the applicant demonstrates to the satisfaction of the Air Pollution Control Officer that the new source can be expected to comply with all the applicable state laws and District regulations and rules. *FINDING - this is being done.*

Regulation 3 – Permits, Rule 3.1 "Permits Required" - Any person building, erecting, altering or replacing any article, machine, equipment or other contrivance, the use of which may cause the issuance of air contaminants or the use of which may eliminate or reduce or control the issuance of air contaminants, shall first obtain written authorization for such construction from the Air Pollution Control Officer. *FINDING - this is being done.*

NEW SOURCE REVIEW RULE

Regulation 3 – Permits, Rule 3.6 "Standards for Authority to Construct (New Source Review)"

The federal Clean Air Act, U.S. EPA regulations, California Clean Air Act and the Colusa County APCD establish the criteria for siting new and modified emission sources. The federally mandated process for permitting new or modified sources in federal non-attainment areas is referred to as Non-attainment New Source Review (NNSR). The Colusa District is responsible for NSR rule enforcement for sources in Colusa County. The District's NSR rules are contained in Regulation 3, Rule 3.6. The rule requires that Best Available Control Technology (BACT) be applied to any new or modified emissions unit that emits above a specified level. The rule requires all potential emission increases of non-attainment pollutants or their precursors above specified thresholds be offset by real, quantifiable, surplus, permanent, and enforceable emission decreases in the form of emission reduction credits. An ambient air quality impact assessment must be conducted to confirm that the proposed project does not cause or contribute to a violation of a federal or California ambient air quality standard (AAQS) or jeopardize public health. Finally, the project proponent must certify that all major sources owned or operated in the State of California are either in compliance or on an approved schedule for compliance with applicable air quality regulations.

BEST AVAILABLE CONTROL TECHNOLOGY

An Applicant shall apply BACT to any new emissions unit or modification of an existing emissions unit, which results in an emissions increase and the potential to emit for the emissions unit that equals or exceeds the following amounts:

Pollutant	**BACT Rule Limit**	**CGS Project Emissions - (hours)**		
	Pounds/Day	1 Turbine (24)	Boiler (24)	Generator (1)
Volatile organic compounds	25	315.3	4.32	0.15
Nitrogen oxides	25	1,497.3	11.52	13.88
Sulfur oxides	80	96.0	1.58	0.01
Particulate matter (PM_{10})	80	482.4	5.28	0.09
Carbon monoxide	500	3,829.5	39.12	0.32

As indicated by the data presented in the table above the gas turbines with associated duct burners must have BACT installed for all pollutants. The auxiliary boiler nitrogen oxides number represents controlled emissions with a low NOx burner. This would be considered BACT. The emergency generator engine operates only one hour per week and does not exceed the BACT thresholds.

FINDING - The CTGs will meet the following BACT emission limits: VOC of 2.0, NOx of 2.0 and CO of 3.0. All limits are ppmvd at 15 percent oxygen. BACT for SOx and PM_{10} is the use of natural gas as fuel.

OFFSET REQUIREMENTS

Offsets are required for a new stationary source with a potential to emit non-attainment pollutants or their precursors equal to or exceeding 25 tons per year. The amount of offsets required shall be at least equal to that portion of the potential to emit that exceeds 25 tons per year. Location of offsets and offsets ratios by corresponding distances from the proposed source shall be:

Onsite, at a ratio of	1:1
Within 20 miles, at a ratio of	1.2:1
20 to 50 miles, at a ratio of	1.5:1
Over 50 miles, at a ratio of	2:1

The Air Pollution Control Officer may approve interpollutant offsets on a case-by-case basis, provided that the applicant demonstrates to the satisfaction of the Air Pollution Control Officer, through the use of an impact analysis, that the emission increases from the new or modified source will result in a net air quality benefit and will not cause or contribute to a violation of any air quality standard.

The applicant proposed a 1.4:1 ratio as a VOC for NOx interpollutant offset ratio based upon the two nearest relevant studies: the Sacramento Area Ozone Study (CARB, 1995) and the San Francisco Bay Area Ozone Attainment Plan (OAP) (ABAG, BAAQMD, and MTC, 2001). The rate of ozone formation is heavily dependent on initial NO_X and VOC concentrations, as well as local meteorological conditions. The relationship between ozone formation and the initial concentrations of NO_X and VOC has been the subject of many studies and is often depicted graphically through ozone isopleth diagrams. Ozone isopleth diagrams illustrate the dependence of ozone production on the initial amounts of VOC and NO_X. The total 2005 VOC and NO_X emissions for Colusa County were 6.81 tons per day VOC and 10.12 tons per day NO_X. The peak 1-hour ozone level, used as the background in the AFC was 89 ppb. There is consistency between the peak ozone reading predicted by the Colusa isopleth and the actual peak ozone concentration measured in Colusa. Because ozone is a regional pollutant, the applicant also evaluated the Sacramento Valley Air Basin precursor emission inventory and found that reducing more VOC is beneficial to lowering ozone concentrations. Although theoretically the ratio predicted is 1.4:1 NOx to VOC the applicant is proposing to reverse the ratio and provide 1.4 tons of VOC emission reductions to offset a 1.0 ton increase in NOx emissions.

E&L Westcoast needs to offset emissions increases of the following amounts:

NO_x : 160.55 tpy
VOC : 23.24 tpy
PM_{10} : 117.24 tpy

The applicant has prepared the following tables (with distance factor adjustments from the project site) describing available stationary and area source emission reduction credits that could be used as offsets for the project's emissions increase. Two stationary sources are located in the Sacramento Valley Air Basin in adjacent air districts. The Colusa County Air District consultant inspected both sources while they were still in operation. The stationary sources are located northeast of the proposed CGS facility.

Highway 70 Industrial Park, LP // Oroville, CA // Butte County						
Certificate(s) and Distance	Pollutant	1st Quarter (lbs)	2nd Quarter (lbs)	3rd Quarter (lbs)	4th Quarter (lbs)	Annual (lbs)
(Cert. 08-05-36, 08-05-37)	NO_X	23,333.3	23,333.3	23,333.3	23,333.3	93,333.3
(Cert.08-05-39)	VOC	58,333.3	58,333.3	58,333.3	58,333.3	233,333.3
> 20 < 50 miles	PM_{10}	22,333.3	22,333.3	22,333.3	22,333.3	89,333.3

Jack W. Baber // Sierra Mountain Mills, Camptonville, CA // Yuba County						
Certificate(s) and Distance	Pollutant	1st Quarter (lbs)	2nd Quarter (lbs)	3rd Quarter (lbs)	4th Quarter (lbs)	Annual (lbs)
(Cert. ERC-9937006-00T)	NO_X	210.0	353.5	320.5	250.5	1,134.5
	VOC	99.5	167.5	152.0	119.0	538.0
	PM_{10}	3,017.0	5,078.0	4,609.0	3,600.5	16,304.5
> 50 miles	SO_2	83.0	139.5	127.0	99.0	448.5

Emissions will also be offset through the purchase of ERCs generated by the cessation of agricultural burning. Colusa County is an agricultural county. The primary crop is rice, with additional acres of wheat, corn, safflower and other crops also under cultivation. ERCs generated by elimination of agricultural burning are calculated by a methodology that takes into account the following factors:

Historical burn fraction (*i.e.,* what percentage of the crop land is actually burned in a given year), or HBF; Quarterly burn fraction (how much of the total annual burning takes place in a given quarter), or QBF; Fuel loading factor (how many tons of crop residue there are per acre), or FL; and Emission factors (pounds of emissions per ton of crop residue burned), or EF. Proposed agricultural burning ERCs are:

Baber Family Trust // Colusa, CA // Colusa County						
Certificate(s) and Distance	Pollutant	1st Quarter (lbs)	2nd Quarter (lbs)	3rd Quarter (lbs)	4th Quarter (lbs)	Annual (lbs)
(Cert. 06-01-02-03)	NO_X	837.3	675.3	270.1	918.3	2,701.0
	VOC	756.8	610.3	244.1	830.0	2,441.2
	PM_{10}	1,014.4	818.1	327.3	1,112.6	3,272.3
< 20 miles	SO_2	177.1	142.8	57.2	194.3	571.3

Jack W. Baber and Judith S. Baber // Colusa, CA // Colusa County						
Certificate(s) and Distance	Pollutant	1st Quarter (lbs)	2nd Quarter (lbs)	3rd Quarter (lbs)	4th Quarter (lbs)	Annual (lbs)
(Cert. 06-01-02-04)	NO_X	2,001.5	1,614.1	645.7	2,195.2	6,456.4
	VOC	1,809.0	1,458.9	583.6	1,984.1	5,835.6
	PM_{10}	2,424.8	1,955.5	782.3	2,659.5	7,822.1
< 20 miles	SO_2	423.4	341.4	136.6	464.3	1,365.8

Estate of Jack W. Baber Jr. // Colusa, CA // Colusa County

Certificate(s) and Distance	Pollutant	1st Quarter (lbs)	2nd Quarter (lbs)	3rd Quarter (lbs)	4th Quarter (lbs)	Annual (lbs)
(Cert. 06-01-02-05)	NO_X	707.1	570.3	228.1	775.6	2,281.0
	VOC	639.2	515.4	206.2	701.0	2,061.8
	PM_{10}	856.7	690.9	276.3	939.6	2,763.5
< 20 miles	SO_2	149.6	120.7	48.3	164.1	482.6

Pixie E. Baber // Colusa, CA // Colusa County						
Certificate(s) and Distance	Pollutant	1st Quarter (lbs)	2nd Quarter (lbs)	3rd Quarter (lbs)	4th Quarter (lbs)	Annual (lbs)
(Cert. 06-01-02-05.2)	NO_X	674.2	521.3	217.5	739.4	2,152.3
	VOC	609.3	491.4	196.6	668.3	1,965.7
	PM_{10}	816.8	658.8	263.5	895.8	2,634.9
< 20 miles	SO_2	142.6	115.0	46.0	156.4	460.0

Jack W. Baber and Judith S. Baber // Colusa, CA // Colusa County						
Certificate(s) and Distance	Pollutant	1st Quarter (lbs)	2nd Quarter (lbs)	3rd Quarter (lbs)	4th Quarter (lbs)	Annual (lbs)
(Cert. 06-01-02-06)	NO_X	489.8	395.1	158.0	537.3	1,580.2
	VOC	442.8	357.1	142.8	485.6	1,428.3
	PM_{10}	593.5	478.6	191.4	650.9	1,914.4
< 20 miles	SO_2	103.6	83.6	33.4	113.7	334.3

Inez Garrette // Colusa, CA // Colusa County						
Certificate(s) and Distance	Pollutant	1st Quarter (lbs)	2nd Quarter (lbs)	3rd Quarter (lbs)	4th Quarter (lbs)	Annual (lbs)
(Cert. 06-01-02-07)	NO_X	163.3	131.7	52.7	179.1	526.7
	VOC	147.6	119.0	47.6	161.8	476.0
	PM_{10}	197.8	159.5	63.8	217.0	638.2
< 20 miles	SO_2	34.5	27.8	11.2	37.9	111.4

Jack W. Baber and Judith S. Baber // Colusa, CA // Colusa County						
Certificate(s) and Distance	Pollutant	1st Quarter (lbs)	2nd Quarter (lbs)	3rd Quarter (lbs)	4th Quarter (lbs)	Annual (lbs)
(Cert. 06-01-02-08)	NO_X	1,736.3	1,400.2	560.1	1,904.3	5,600.8
	VOC	1,569.3	1,265.6	506.3	1,721.2	5,062.3
	PM_{10}	2,103.5	1,696.3	678.6	2,307.1	6,785.5
< 20 miles	SO_2	367.3	296.2	118.5	402.8	1,184.8

Jack W. Baber Jr. // Colusa, CA // Colusa County						
Certificate(s) and Distance	Pollutant	1st Quarter (lbs)	2nd Quarter (lbs)	3rd Quarter (lbs)	4th Quarter (lbs)	Annual (lbs)

(Cert. 06-01-02-09)	NO_X	1,314.3	1,059.9	424.0	1,441.5	4,239.8
	VOC	1,187.9	958.0	383.3	1,302.9	3,832.1
	PM_{10}	1,592.3	1,284.2	513.7	1,746.4	5,136.6
< 20 miles	SO_2	278.0	224.3	89.7	304.9	896.8

Jon B. Chaney // Maxwell, CA // Colusa County						
Certificate(s) and Distance	Pollutant	1st Quarter (lbs)	2nd Quarter (lbs)	3rd Quarter (lbs)	4th Quarter (lbs)	Annual (lbs)
(Cert. 06-01-02-01)	NO_X	1,753.4	1,414.1	565.4	1,923.2	5,656.1
	VOC	1,584.8	1,278.1	511.3	1,738.3	5,112.4
	PM_{10}	2,124.4	1,713.2	685.3	2,330.0	6,852.8
< 20 miles	SO_2	370.9	299.2	119.7	406.8	1,196.6

Gunnersfield Ent., Inc. // Maxwell, CA // Colusa County						
Certificate(s) and Distance	Pollutant	1st Quarter (lbs)	2nd Quarter (lbs)	3rd Quarter (lbs)	4th Quarter (lbs)	Annual (lbs)
(Cert. 06-01-02-02)	NO_X	4,680.0	3,774.2	1,509.7	5,132.8	15,096.7
	VOC	4,230.0	3,411.3	1,364.5	4,639.3	13,645.1
	PM_{10}	5,669.9	4,572.5	1,829.0	6,218.7	18,290.1
< 20 miles	SO_2	990.0	798.4	319.3	1,085.8	3,193.6

Jerry Maltby et. al. // Williams, CA // Colusa County						
Certificate(s) and Distance	Pollutant	1st Quarter (lbs)	2nd Quarter (lbs)	3rd Quarter (lbs)	4th Quarter (lbs)	Annual (lbs)
(Cert. 06-06-11-01)	NO_X	3,768.8	3,039.3	1,215.8	4,133.5	12,157.3
	VOC	3,406.4	2,747.1	1,098.8	3,736.1	10,988.4
	PM_{10}	4,566.0	3,682.3	1,472.9	5,007.9	14,729.1
< 20 miles	SO_2	797.3	642.9	257.2	874.4	2,571.8

Keeley Family Limited Partnership // Colusa, CA // Colusa County						
Certificate(s) and Distance	Pollutant	1st Quarter (lbs)	2nd Quarter (lbs)	3rd Quarter (lbs)	4th Quarter (lbs)	Annual (lbs)
(Cert. 06-07-06-01)	NO_X	1,404.3	1,132.5	453.0	1,540.2	4,530.0
	VOC	1,269.3	1,023.6	409.4	1,392.1	4,094.4
	PM_{10}	1,701.4	1,372.1	548.8	1,866.0	5,488.2
< 20 miles	SO_2	297.1	239.6	95.8	325.8	958.3

Jim Lagrande // Colusa, CA // Colusa County						
Certificate(s) and Distance	Pollutant	1st Quarter (lbs)	2nd Quarter (lbs)	3rd Quarter (lbs)	4th Quarter (lbs)	Annual (lbs)
(Cert. 06-01-03-01)	NO_X	1,099.2	956.8	472.5	1,207.4	3,735.9

	VOC	993.5	925.6	528.9	1,092.9	3,540.9
	PM_{10}	1,331.7	1,247.4	720.3	1,465.3	4,764.7
< 20 miles	SO_2	232.5	202.3	99.7	255.4	789.8

Charles Tuttle, Gordon Ranch // Maxwell, CA // Colusa County						
Certificate(s) and Distance	Pollutant	1st Quarter (lbs)	2nd Quarter (lbs)	3rd Quarter (lbs)	4th Quarter (lbs)	Annual (lbs)
(Cert. 06-07-02-01)	NO_X	1,327.0	1,207.0	657.6	1,459.0	4,650.6
	VOC	1,199.4	1,209.2	792.5	1,321.9	4,522.9
	PM_{10}	1,607.7	1,634.1	1,084.3	1,772.3	6,098.3
< 20 miles	SO_2	280.7	255.0	138.5	308.6	982.9

Charles Tuttle, Helphenstine Ranch // Maxwell, CA // Colusa County						
Certificate(s) and Distance	Pollutant	1st Quarter (lbs)	2nd Quarter (lbs)	3rd Quarter (lbs)	4th Quarter (lbs)	Annual (lbs)
(Cert. 06-07-02-02)	NO_X	0.0	71.5	119.8	1.9	193.3
	VOC	0.0	126.4	211.8	3.4	341.6
	PM_{10}	0.0	176.3	295.4	4.8	476.5
< 20 miles	SO_2	0.0	15.0	25.1	0.4	40.5

Charles Tuttle, Tenant Ranch // Maxwell, CA // Colusa County						
Certificate(s) and Distance	Pollutant	1st Quarter (lbs)	2nd Quarter (lbs)	3rd Quarter (lbs)	4th Quarter (lbs)	Annual (lbs)
(Cert. 06-07-02-03)	NO_X	1.3	99.0	294.0	2.7	397.0
	VOC	4.3	175.0	714.6	4.8	898.6
	PM_{10}	4.3	244.1	912.9	6.6	1,167.8
< 20 miles	SO_2	0.2	20.8	51.8	0.6	73.3

Charles Tuttle, Williams Ranch // Maxwell, CA // Colusa County						
Certificate(s) and Distance	Pollutant	1st Quarter (lbs)	2nd Quarter (lbs)	3rd Quarter (lbs)	4th Quarter (lbs)	Annual (lbs)
(Cert. 06-07-02-04)	NO_X	0.0	50.8	85.1	1.4	137.2
	VOC	0.0	89.7	150.4	2.4	242.5
	PM_{10}	0.0	125.2	209.7	3.4	338.3
< 20 miles	SO_2	0.0	10.6	17.8	0.3	28.7

Jack DeWit // Maxwell, CA // Colusa County						
Certificate(s) and Distance	Pollutant	1st Quarter (lbs)	2nd Quarter (lbs)	3rd Quarter (lbs)	4th Quarter (lbs)	Annual (lbs)
(Cert. 06-07-02-05)	NO_X	952.5	768.2	307.3	1,044.8	3,072.7
	VOC	860.9	694.3	277.8	944.3	2,777.3

	PM_{10}	1,154.0	930.7	372.3	1,265.7	3,722.6
< 20 miles	SO_2	201.5	162.5	65.0	221.0	650.0

Davis Ranches // Colusa, CA // Colusa County						
Certificate(s) and Distance	Pollutant	1st Quarter (lbs)	2nd Quarter (lbs)	3rd Quarter (lbs)	4th Quarter (lbs)	Annual (lbs)
(Cert. 06-7-2001-1)	NO_X	8,689.5	7,007.7	2,803.1	9,530.4	28,030.6
	VOC	7,853.9	6,333.8	2,533.5	8,614.0	25,335.3
	PM_{10}	10,527.6	8,490.0	3,396.0	11,546.4	33,960.0
> 20 miles < 50 miles	SO_2	1,834.8	1,482.4	592.9	2,016.1	5,926.2

William Payne // Woodland, CA // Sutter County						
Certificate(s) and Distance	Pollutant	1st Quarter (lbs)	2nd Quarter (lbs)	3rd Quarter (lbs)	4th Quarter (lbs)	Annual (lbs)
(Cert. ERC 2001-26)	NO_X	1,134.0	1,249.3	2,022.0	1,267.3	5,672.7
	VOC	1,025.3	1,574.7	5,356.0	1,145.3	9,101.3
	PM_{10}	1,374.0	2,160.0	6,620.7	1,535.3	11,690.0
> 20 miles < 50 miles	SO_2	240.0	263.3	326.0	268.0	1,097.3

The map presented below is a portion of Colusa County with sections, township and range outlined, the CGS site identified and surrounding rice fields (highlighted in yellow crosshatching). Three nearby grower fields are noted that are part of the agricultural ERCs proposed as offsets.

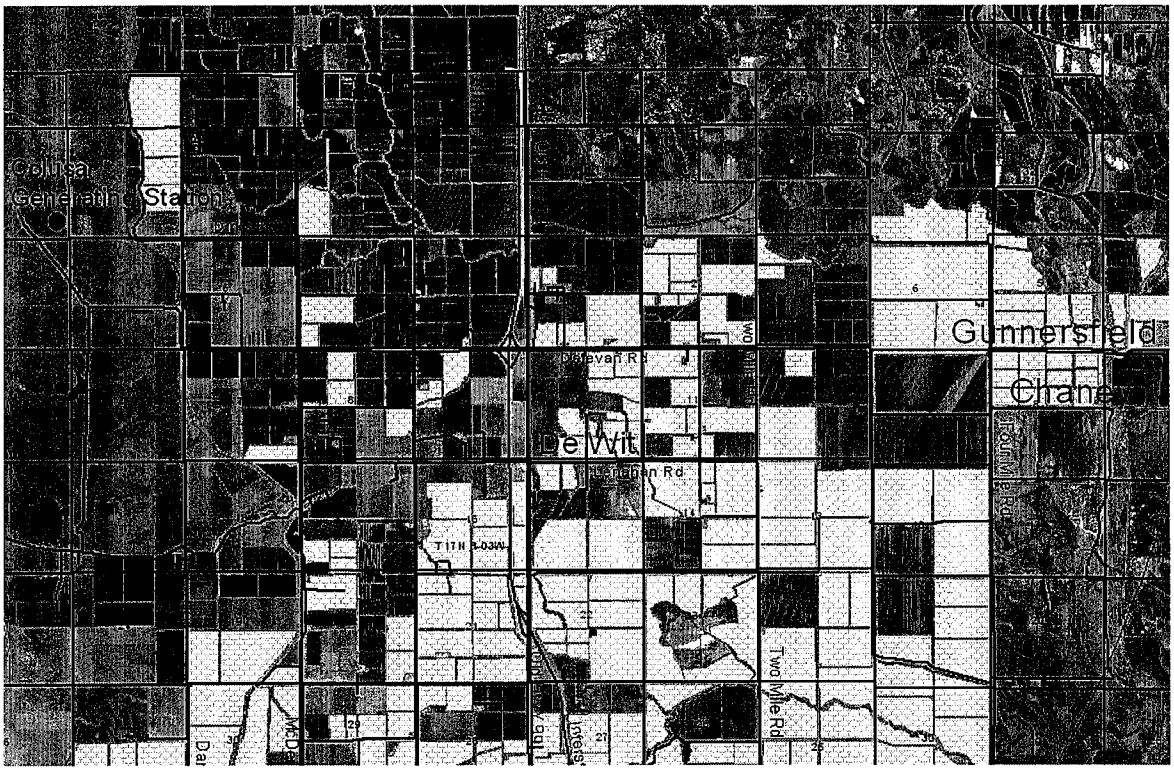

FINDING - the ERC offset information and quarterly pollutant amounts will need to be verified by District analyses. Applicant will be required to have the ERC certificate ownerships transferred to them from the current owners and then surrender the certificates to the Colusa County Air Pollution Control District. Offsets coming from other air districts will need to have a signed MOU between the Colusa County Air Pollution Control District and those districts approving the transfer of emission reduction credits. All of these actions must take place before the facility is allowed to operate.

AIR QUALITY IMPACT ANALYSES

One provision of the NSR Rule regards analyzing project emissions as they might affect ambient air quality levels. The rule states, "In no case shall the emissions from the new or modified stationary source cause or make worse the violation of an Ambient Air Quality Standard." An impact analysis shall be used to estimate the effects of a new or modified source. In considering the project's emission impacts, the Air Pollution Control Officer will take into account the mitigation of emissions through offsets and determine that there is a net air quality benefit. **"Net air quality benefit" means a net improvement in air quality resulting from actual emission reductions impacting the same general area affected by the new or modified source.** The Colusa County Air Pollution Control District has conducted analyses of the emission reduction credits proposed by the applicant. The analyses describe the burning management program, impacts from burning on non-attainment pollutants, how agricultural ERCs are calculated, enforcing agricultural ERCs and modeling of pollution emissions from agricultural burning in Colusa County. The analyses are covered in appendices A through E.

1) Appendix A – Agricultural Burning in Colusa County
2) Appendix B – Impact of Agricultural Burning on Particulate Matter and Ozone Concentrations
3) Appendix C – Emission Reduction Credits and Offsets
4) Appendix D – Enforcement of Emission Reduction Credits and Offsets
5) Appendix E – Modeling of Emissions from Agricultural Burning ERC Fields

The Colusa County Air Pollution Control District analyzed the impact of agricultural burning emissions on air quality levels in the County. Analyses included impacts from combustion of agricultural residues on both particulate matter and ozone concentrations. Agricultural burning emissions include particulate emissions less than ten microns in size as-well-as precursors to ozone (i.e., oxides of nitrogen and volatile organic compounds).

Several air quality studies were reviewed that addressed the impact of agricultural (vegetative) burning on particulate levels. All of the studies concluded that potassium is a strong indicator of vegetative burning sources and is linked to agricultural burns. The Air District reviewed particulate PM_{10} data from the Colusa air monitoring site operated by the California Air Resources Board at Sunrise Blvd. During the years of 1991 through 1995, for September, October and November, the Board's monitoring laboratory analyzed the particulate for various chemical species including potassium. The correlation between the total PM_{10} data and potassium values clearly confirmed the contribution from agricultural burning (see appendix B).

Many studies have been conducted showing the relationship of vegetative burning to ozone formation. Some of the air quality studies have occurred in the United States while others were in foreign countries. One study from the National Center for Atmospheric Research in Boulder, Colorado stated "Although the ingredients for ozone can be found in urban pollution, pollutants from fires might cause a significant increase in ozone levels, even far downwind from the fires."

District staff collected hourly data for $PM_{2.5}$ from the ARB realtime Beta Attenuation Monitor (BAM) located at the Colusa Sunrise Blvd site. Also we obtained the corresponding hourly ozone data from the same site. Hourly data that we analyzed were from 2005 for the months of June through October (the ozone season). These data, for each month, show a parallel in terms of particulate and ozone values for almost every hour (see appendix B).

The proposed project offsets come from emission reductions at stationary sources and area sources (i.e., agricultural burning). Emission reductions in NOx, VOC, PM_{10} and SO_2 will, at a minimum, be at a ratio of 1.2:1 tons reduced emissions to new project emissions. This means the emission reductions occurred within 20 miles of the project site. Some of the emission reductions were between 20 and 50 miles distance and a very small amount were greater than 50 miles. The following percentage of offsets were less than 20 miles from the project site and within Colusa County respectively: NOx 36.9 and 50.7%, VOC 20.5 and 28%, PM_{10} 38 and 51.9%, and SO_2 68 and 93.4%. Although the third quarter has the fewest offset tons of ozone precursors the ratio of ERC offsets to new project emissions is 1.28:1 which is sufficient mitigation.

Transfer of emission reduction credits from Butte, Yuba and Sutter counties have been approved by the Butte County Air Quality Management District and the Feather River Air Quality Management District (Yuba and Sutter counties). Appendix F is Resolution 2007-10 from the Board of the Butte County AQMD authorizing the transfer emission credits. Appendix G is Resolution 2007-02 from the Board of the Feather River Air Quality Management District authorizing the transfer of credits.

Therefore, based on the offset quantities, distances, studies reviewed and air quality data that were collected and analyzed we conclude that the offsets, including agricultural burning emission reductions, will produce a net a quality benefit.

E&L Westcoast's consultant has performed air quality modeling using the AERMOD model. This model is EPA recognized and approved. Ozone modeling was not done although the precursor emissions of NOx and VOC will exacerbate current levels. The PM_{10} and $PM_{2.5}$ emissions from both construction activities and routine plant operations showed levels above the California Ambient Air Quality Standards. *FINDING - the offsets provided for the facility will mitigate all of the air quality impacts.*

Colusa Generating Station Project Modeling Results – Routine Plant Operations					
Pollutant	**Averaging Period**	**Maximum modeled**	**Background ug/m3**	**Total**	**CA&EPA AAQS ug/m3**
NO_2	1-hour	336.3	120.3	456.6	470
NO_2	Annual	0.64	26.3	26.9	100
PM_{10}	24-hour	4.35	92	96.4	50
PM_{10}	Annual	0.5	25.5	26.0	20
$PM_{2.5}$	24-hour	2.73	26	28.7	35
$PM_{2.5}$	Annual	0.51	11	11.5	12

PROHIBITORY RULES

Regulation 2 – Prohibitions, Rule 2.10 "Nuisance" - In accordance with Section 41700 of the California Health and Safety Code a person shall not discharge from any source whatsoever such quantities of air

contaminants or other materials which cause injury, detriment, nuisance or annoyance to any considerable number of persons or to the public or which endanger the comfort, repose, health or safety of any such person or the public or which cause or have a natural tendency to cause injury or damage to business or property. *FINDING - this facility is not expected to cause a nuisance.*

Regulation 2 – Prohibitions, Rule 2.13 "Visible Emissions" - As provided by Section 41701 of the California Health and Safety Code, a person shall not discharge into the atmosphere from any single source of emissions whatsoever, any air contaminants for a period or periods aggregating more than three minutes in any one hour which is: as dark or darker in shade as that designated as No. 2 on the Ringelmann Chart, as published by the United States Bureau of Mines; or of such opacity as to obscure an observer's view to a degree equal to or greater than does smoke described in the phrase above. *FINDING - because of the use of natural gas this facility is expected to meet these rule limits.*

Regulation 2 – Prohibitions, Rule 2.15 "Particulate Matter Concentration" - A person shall not discharge into the atmosphere from any source, particulate matter in excess of 0.3 grains per standard dry cubic foot of gas. *FINDING - because of the use of natural gas this facility is expected to meet this limit.*

Regulation 2 – Prohibitions, Rule 2.16 "Dust and Fumes" - A person shall not discharge in any one hour from any source whatsoever, dust or fumes in total quantities in excess of the amounts shown in the table. To use the table, take the process weight per hour as such is defined in Rule 1.2 Definitions.

"Process Weight Per Hour" means the total weight excluding water added for processing or air used in processing introduced into any specific process may cause and discharge into the atmosphere. Solid fuels charged will be considered as part of the process weight, but liquid and gaseous fuels and combustion air will not. The "process weight per hour" will be derived by dividing the total process weight by the number of hours in one complete operation from the beginning of any given process to the completion thereof, excluding any time during which the equipment is idle."

Then find this figure on the table opposite, which is the maximum number of pounds of contaminants that may be discharged into the atmosphere in any one hour. *FINDING - this rule will be met.*

Regulation 2 – Prohibitions, Rule 2.22 "Sulfur Oxides" - A person shall not discharge into the atmosphere from any single source of emission whatsoever, any sulfur oxides in excess of 0.2 percent by volume (2,000 ppm) collectively calculated as sulfur dioxide (SO_2). *FINDING - this rule will be met.*

Regulation 2 – Prohibitions, Rule 2.23 "Reduced Sulfur Compounds" - It shall be unlawful for any person to permit the emissions of air contaminants from any premises that will result in ground level concentrations of total reduced sulfur compounds, expressed as hydrogen sulfide, in excess of 0.03 ppm for a period of sixty (60) minutes. *FINDING - this rule will be met.*

Regulation 2 – Prohibitions, Rule 2.36 "Stationary Internal Combustion Engines" - To limit emissions of nitrogen oxides (NOx) and carbon monoxide (CO) from stationary internal combustion engines. The provisions of this rule apply to any gaseous, diesel, or any other liquid-fueled stationary internal combustion engine within the boundaries of the District. Except for the administrative requirements of Section f.3. the provisions of this rule shall not apply to the following engines: Engines operated exclusively for fire fighting or flood control. *FINDING - this rule will be met because the emergency firewater pump engine is exempt.*

Regulation 2 – Prohibitions, Rule 2.39 "Industrial, Institutional, and Commercial Boilers, Steam Generators, and Process Heaters Oxides of Nitrogen Control Measure" - To reduce Oxides of Nitrogen

emissions during the operations of Industrial, Institutional, and Commercial Boilers, Steam Generators, and Process Heaters to levels consistent with reasonably available control technology (RACT). This rule applies to all boilers, steam generators, and process heaters used in industrial, institutional, and commercial operations that exist within the boundaries of the Colusa County Air Pollution Control District on the date of adoption of this Rule.

No later than one year following District adoption of this Rule, all existing units with a rated heat input capacity greater than or equal to 5 million BTU per hour shall demonstrate final compliance with the following Reasonably Available Control Technology (RACT) emission limitations dependent upon the specific fuel fired in the unit and based upon a three-hour averaging period.

RACT: Gaseous only fuel firing: 0.084 lbs/MMBtu of heat input or 70 ppmv

FINDING - the new auxiliary boiler will comply with the requirements of District Rule 3.6 - Standards for Authority to Construct (New Source Review - BACT) and thereby also meet this rule.

Regulation 2 – Prohibitions, Rule 2.41 "Determination of Reasonably Available Control Technology for the Control of Oxides of Nitrogen from Stationary Gas Turbines" - To limit the emissions of nitrogen oxides (NOx) to the atmosphere from the operation of stationary gas turbines. Except as provided in Section c., this determination shall apply to all existing stationary gas turbines rated by the manufacturer as 0.3 megawatt (MW) power output and larger.

Unless opting for the alternative compliance strategy, the owner or operator of any stationary gas turbine unit subject to the provisions of this rule shall not operate such unit under load conditions, excluding the thermal stabilization period, which results in the measured NOx emissions concentration exceeding the emissions limit listed below averaged over three (3) hours.

		Gas	Oil
RACT:	0.3 MW and Greater	42	65 ppmvd @ 15%O_2

FINDING - the new gas turbine units will comply with the requirements of District Rule 3.6 - Standards for Authority to Construct (New Source Review - BACT) and thereby also meet this rule.

AIR TOXICS

Facility operations were evaluated to determine whether certain substances would be used or generated that may cause adverse health effects if released into the air. The primary sources of potential emissions from facility operations are the natural gas–fired combustion turbine generators (and duct burners) and the aqueous ammonia slipstream from the selective catalytic reduction control system. Toxic emissions from the auxiliary boiler were also evaluated. Emissions from the emergency generator and fire pump engines were estimated using PM_{10} emissions as a surrogate for the toxic compound, diesel exhaust.

The potential human health risks posed by the Project's emissions were assessed using procedures consistent with the Air Toxics Hot Spots Program Risk Assessment Guidelines – The Air Toxics Hot Spots Program Guidance Manual for Preparation of Health Risk Assessments (Cal-EPA and OEHHA 2003). The OEHHA guidelines were developed to provide health risk assessment (HRA) procedures as required under the Air Toxics Hot Spots Information and Assessment Act of 1987. The HRA was conducted in four steps using the Hotspots Analysis and Reporting Program (HARP [CARB 2005]):

1. Hazard Identification and Emission Quantification
2. Exposure Assessment

3. Dose-Response Assessment
4. Risk Characterization

First, hazard identification was performed to determine the potential health effects that may be associated with project emissions. Second, an exposure assessment was conducted to estimate the extent of public exposure to the CGS project emissions. Third, a dose-response assessment was performed in HARP to characterize the relationship between pollutant exposure and the incidence of an adverse health effect in exposed populations. Fourth, risk characterization was performed to integrate the health effects and public exposure information and provide qualitative estimates of health risks from project emissions. Risk modeling was performed using HARP to estimate cancer and non-cancer health risks for the project. From the OEHHA guidelines a list of pollutants with potential cancer and non-cancer health effects associated with the emissions from the project are presented in the following table. Unit risk factors for cancer and both chronic (long term) and acute (short term) reference exposure levels (REL) are indicated.

Toxicity Values Used To Characterize Health Risks

Compound	Sources of Emissions	Inhalation Cancer Potency Factor $(mg/kg\text{-}day)^{-1}$	Chronic REL ($\mu g/m^3$)	Acute REL ($\mu g/m^3$)
Diesel particulate (PM_{10})	Two diesel engines	1.1E+00	5.0E+00	--
Ammonia	Gas turbine stacks	--	2.0E+02	3.2E+03
1,3-Butadiene	Gas turbine stacks	6.0E-01	2.0E+01	--
Acetaldehyde	Gas turbine stacks/aux boiler	1.0E-02	9.0E+00	--
Acrolein	Gas turbine stacks	--	6.0E-02	1.9E-01
Benzene	Gas turbine stacks/aux boiler	1.0E-01	6.0E+01	1.3E+03
Ethylbenzene	Gas turbine stacks/	--	2.0E+03	--
Formaldehyde	Gas turbine stacks/aux boiler	2.1E-02	3.0E+00	9.4E+01
Hexane	Gas turbine stacks	--	7.0E+03	--
Propylene	Gas turbine stacks	--	3.0E+03	--
Propylene oxide	Gas turbine stacks	1.3E-02	3.0E+01	3.1E+03
Toluene	Gas turbine stacks	--	3.0E+02	3.7E+04
Xylenes	Gas turbine stacks	--	7.0E+02	2.2E+04
Polycyclic Aromatic Hydrocarbons				
Benzo(a)anthracene	Gas turbine stacks	3.9E-01	--	--
Benzo(a)pyrene	Gas turbine stacks	3.9E+00	--	--
Benzo(b)fluoranthene	Gas turbine stacks	3.9E-01	--	--
Benzo(k)fluoranthene	Gas turbine stacks	3.9E-01	--	--
Chrysene	Gas turbine stacks	3.9E-02	--	--
Dibenz(a,h)anthracene	Gas turbine stacks	3.9E-01	--	--
Indeno(1,2,3-cd)pyrene	Gas turbine stacks	3.9E-01	--	--
Naphthalene	Gas turbine stacks	1.2E-01	9.0E+00	--

Source: Cal-EPA/OEHHA 2005 -- = not applicable [1]mg/kg-day = milligram(s) per kilogram per day

RISK ASSESSMENT

The HRA was conducted using worst-case turbine, auxiliary boiler, and emergency diesel engine emissions. Cancer and chronic non-cancer health effects were estimated using the annual turbine and other source emission estimates. Acute non-cancer health effects were estimated using the worst-case maximum hourly emissions for the turbines and other sources. The maximum hourly emissions in lb/hour were used as input to the HARP model. Toxicological data, unit risk factors and RELs are built

into the CARB's HARP model. Risk values were modeled for all sensitive receptors within 3 miles of the CGS project and all grid, boundary and census receptors within 6 miles of the CGS project.

Adverse health effects are expressed as cancer or non-cancer health risks. Cancer risk is typically reported as "lifetime cancer risk," which is the estimated maximum increase of risk of developing cancer caused by long-term exposure to a pollutant suspected of being a carcinogen. The calculation of cancer risk assumes an individual is exposed continuously to pollutants for 24 hours per day for 70 years. For carcinogenic health effects, an exposure is considered potentially significant when the predicted lifetime cancer risk exceeds 10 in 1 million (1.0×10^{-5}).

Non-cancer risk is reported as a "total hazard index" (THI). The THI is calculated for each target organ as a fraction based on the maximum acceptable exposure level to a pollutant. The acceptable exposure level is generally the level at (or below) which no adverse health effects are expected. The THI is calculated for short-term (acute) and long-term (chronic) exposures. For non-carcinogenic health effects, an exposure that affects each target organ is considered potentially significant when the THI exceeds a value of 1.

Results of the emission modeling and risk assessment analyses are shown in the table below.

Cancer Risk at Maximum Point of Impact	Chronic Risk at Maximum Point of Impact	Acute Risk at Maximum Point of Impact
1.194 Excess risk in 1 million	0.03055 THI	0.4205 THI

The estimated cancer risks at all locations are well below the significance criteria of 10 in 1 million. The estimated chronic and acute THIs are well below the significance criterion of 1. *FINDING - the proposed project emissions pose no significant health effects relative to the criteria established for carcinogenic and non-carcinogenic health effects.*

NEW SOURCE PERFORMANCE STANDARDS

New Source Performance Standards (NSPS) have been established by U.S. EPA to limit air pollutant emissions from certain types of new and modified stationary sources. The NSPS regulations are contained in 40 CFR 60 and cover many source categories. Stationary gas turbines are regulated under Subpart GG.

The Colusa County Air District BACT requirements are more restrictive than the NSPS requirements. For example, the controlled NOx emissions from the CGS's gas turbines will be controlled to 2.0 parts per million by volume dry (ppmvd) at 15 percent oxygen, significantly less than the NSPS limit of 75 ppmvd at 15 percent oxygen.

The NSPS fuel requirements for SO_2 will be satisfied by the use of natural gas, and emissions and fuel monitoring will be required to assure compliance with NSPS, acid rain, and other regulatory provisions.

TITLE V FEDERAL OPERATING PERMIT

Title V of the federal Clean Air Act requires U.S. EPA to develop a federal operating permit program that is implemented under 40 CFR 70. This program is administered by CCAPCD under Regulation 3, rule 3-17. Permits must contain emission estimates based on potential-to-emit, identification of all emission sources and controls, a compliance plan, and a statement indicating each source's compliance status. The permits must also incorporate all applicable federal, state, or District orders, rules and regulations.

Because the facility will constitute a new stationary source, the facility owner will be required to submit a complete application for a Title V permit to operate within 12 months after plant startup.

VIII PERMIT CONDITIONS

1) All facility operating staff shall be advised of and familiar with these permit conditions.

2) The "Right of Entry", as provided by the California Health and Safety Code Section 41510 of Division 26, shall apply at all times.

3) In the case of shut-down or re-start of air pollution control equipment for necessary scheduled maintenance, the intent to shut down such equipment shall be reported to the Air Pollution Control Officer at least twenty-four (24) hours prior to the planned shutdown. Such notification does not exempt the facility from complying with all permit limits and requirements.

4) If any upset or breakdown occurs with equipment under permit in such a manner that may cause excess emissions of air contaminants, the APCO shall be notified of such failure or breakdown within twenty-four (24) hours or by 9:00 a.m. by the following working day. The person responsible shall also submit a written statement of full disclosure of the upset/breakdown to the District within 72 hours. The report shall contain the date, time, duration, estimated emissions, cause, and remedy.

5) Fugitive emissions, including dust and odors shall be controlled at all times such that a nuisance is not created at any point beyond the facility's property lines.

6) A person shall be designated to oversee the fugitive dust control program described in the application and this document. Entry roads to the proposed facility site will be paved prior to commencing construction. During construction, the people onsite shall access real-time weather information from the Western Weather Group to determine the prevailing local wind speed. If wind gusts at the Maxwell weather station exceed 15 mph construction personnel shall increase the frequency of watering the exposed soil. All of the mitigation measures will be implemented.

7) The placement of the source testing ports shall be as specified in 40 CFR Part 60, Appendix A, Method 1. A source test protocol shall be submitted to the District, for approval by the Air Pollution Control Officer (APCO), at least 45 days prior to conducting the annual source tests. The District shall be notified at least 10 days prior to actual source testing.

8) Stack gas testing, using EPA, ARB or other APCO approved methods, shall be required on an annual basis for NOx, VOC and CO on the HRSG stacks and the auxiliary boiler stack. The HRSG stacks and the auxiliary boiler stack shall also be tested for SOx and PM_{10} emissions during the first year and if requested by the APCO in subsequent years. The emergency generator and firewater pump engines shall be tested for NOx, SOx, VOC, CO, and PM_{10} during the first year and thereafter only as requested by the APCO.

9) Annual testing of the HRSG stacks shall include quantification of formaldehyde and ammonia (NH_3) emissions for compliance with permit limits. The facility owner/operator shall verify, by continuous recording, the ammonia injection rate to the system. The ammonia source test shall be conducted over the expected operating range of the turbine (including, but not limited to 50%, 75%, and 100% load) to establish the range of ammonia injection rates necessary to achieve NOx emission reductions while maintaining ammonia slip levels. The source test shall also determine the correlation between the heat input rates of each gas turbine and ammonia mass emissions.

10) The gas turbines, duct burners, and auxiliary boiler shall be fired exclusively on pipeline quality natural gas.

11) The annual average sulfur content in the natural gas used at the facility shall be less than or equal to 0.3 grains per 100 scf. Monthly testing, at the site, using approved methods (i.e., EPA 19 and ASTM D-3246) is required to determine the sulfur content of the natural gas. Pacific Gas and Electric natural gas testing data from Burney shall also be reviewed and provided to the District.

12) The sulfur content limit in diesel fuel used in the construction equipment and emergency generator and firewater pump engines shall be no more than 15 ppm. Emissions from the two stationary engines mentioned above shall not exceed Ringelmann 0.5 or 10 percent opacity for an aggregate of three minutes in a one hour period.

13) All applicable federal standards and test procedures of Subpart KKKK--Standards of Performance for Stationary Combustion Turbines shall be met.

14) The CTGs shall meet a VOC limit of 2.0 ppmvd with duct burner firing and 1.38 ppmvd without duct burner firing @ 15% O_2 averaged over one hour. Maximum hourly steady state emission limits for each CTG are:

Pounds VOC with Duct Firing	Pounds VOC without Duct Firing
7.2	3.4

15) The CTGs shall meet a NOx limit of 2.0 ppmvd @ 15% O_2 averaged over one hour except during commissioning. Maximum hourly steady state emission limits for each CTG are:

Pounds NOx with Duct Firing	Pounds NOx without Duct Firing
20.7	15.3

16) The CTGs shall meet a CO limit of 3.0 ppmvd @ 15% O_2 over a three-hour rolling average except during commissioning. Maximum hourly steady state emission limits for each CTG are:

Pounds CO with Duct Firing	Pounds CO without Duct Firing
18.9	14.0

17) The auxiliary boiler shall meet a NOx limit of 15.0 (9 PSD) ppmvd @ 3% O_2 averaged over one hour.

18) Ammonia slip shall be limited to 5.0 ppmvd @ 15% O_2 averaged over one hour. Formaldehyde emissions will be limited to 0.917 lbs per MMscf of natural gas. Maximum hourly steady state emission limits for each CTG are:

Pounds NH_3 with Duct Firing	Pounds NH_3 without Duct Firing
19.2	14.2

19) Continuous emission monitoring (CEM) systems shall be installed to sample, analyze, and record NO_x, CO, O_2 concentration in the exhaust gas of both HRSG stacks. This system will generate reports of emissions data in accordance with permit requirements and will send alarm signals to the plant distributed control system (DCS) control room when the level of emissions approaches

or exceeds pre-selected limits. Relative accuracy test audits shall be conducted annually to verify performance of the CEM system.

20) The Colusa County APCD shall have remote access to the data logger at the facility to enable District staff to monitor realtime emissions as recorded by the CEMs.

21) The CEMs shall be installed, calibrated and operational prior to the first firing of the gas turbines. The commissioning phase of the turbines and heat recovery steam generators without abatement of emissions shall not exceed 500 total hours. All reasonable efforts will be made to shorten the length of time of the commissioning phase. Only one gas turbine may be commissioned at a time. Emissions from the commissioning phase of the turbines and heat recovery steam generators shall accrue toward the quarterly and annual emission limits specified in these conditions.

22) Quarterly reports of CEM and process data, including startup information, shall be submitted to the District within **30 days** after the end of each quarter. Format of the data submission will be determined by the District and may include both electronic spreadsheet and hard copy files.

23) The emissions from the emergency generator and firewater pump engines shall not exceed the hourly limits established in the table below. Total annual operating hours shall not exceed 50 per engine. Testing of these two engines shall not be allowed during gas turbine commissioning and facility startup operations. The generator and firewater pump engines must comply with the Tier rating emissions for their model years.

One Hour Maximum Emissions (lbs)		
Source	**Generator**	**Fire Pump**
NO_X	13.88	1.98
CO	0.32	1.72
VOC	0.15	Incl. in NO_X
PM_{10}	0.09	0.10
SO_2	0.01	<0.01

24) The emission rates from the auxiliary boiler shall not exceed the hourly limits established in the table below. The boiler shall not operate more than 3,744 hours per year.

One Hour Maximum Emissions (lbs)		
Source		**Auxiliary Boiler**
NO_X		0.79
CO		1.61
VOC		0.18
PM_{10}		0.33
SO_2		0.13

25) The total emissions from the CTGs and HRSGs shall not exceed those established below for hourly and daily operations.

Maximum Emissions Both Turbines (lbs)		
Pollutant	**1-Hour Emissions**	**24-Hour Emissions**
NO_X	666.60	2,994.60

Maximum Emissions Both Turbines (lbs)		
CO	967.00	7,659.00
VOC	55.40	630.60
PM_{10}	40.20	964.80
SO_2	14.80	355.20

26) The total emissions from the Colusa Power Plant shall not exceed the limits established below.

Quarterly and Annual Estimated Combustion Emissions from CGS Facility					
Pollutant	**1st Quarter Emissions (tons)**	**2nd Quarter Emissions (tons)**	**3rd Quarter Emissions (tons)**	**4th Quarter Emissions (tons)**	**Annual Emissions (tons)**
NO_x	45.60	43.62	51.34	44.31	184.87
CO	54.20	52.40	107.06	53.86	267.52
VOCs	12.36	11.69	11.90	11.82	47.77
PM_{10}	35.29	35.39	35.70	35.69	142.08
SO_2	4.05	3.83	3.87	3.87	15.62

27) Offsets for the Colusa Generating Station power plant shall be in effect prior to operation of the facility and will not be less than the following amounts at any time. The offsets presented in the table below reflect distance factors and the VOC:NOx interpollutant ratio. No less than 5.08 tons of PM_{10} ERCs per quarter will be provided prior to start of construction activities to offset PM_{10} construction emissions.

Emission Offsets by Calendar Quarter					
Pollutant in tons	**Quarter 1**	**Quarter 2**	**Quarter 3**	**Quarter 4**	**Annual Tons**
Oxides of nitrogen (NO_2)	50.75	47.01	36.55	53.80	188.11
Volatile organic compounds (CH_4)	12.36	11.69	11.90	11.82	47.77
Particulate Matter PM_{10}	32.51	30.75	24.09	34.74	122.09
Oxides of sulfur (SO_2)	3.50	2.94	1.39	3.85	11.68

28) The construction of the facility cannot commence until all construction permits, including the USEPA PSD permit are obtained. Specified, limited construction activities are allowed prior to issuance of the PSD permit as stated in the USEPA policy document dated December 18, 1978.

29) Total facility emissions of Toxic Air Contaminants (TACs) shall not exceed 10 tons per year for any single pollutant except ammonia, formaldehyde and propylene.

IX APPENDICES

Appendix A – Agricultural Burning in Colusa County
Appendix B – Impact of Agricultural Burning on Particulate Matter and Ozone Concentrations
Appendix C – Emission Reduction Credits and Offsets
Appendix D – Enforcement of Emission Reduction Credits and Offsets
Appendix E – Modeling of Emissions from Agricultural Burning ERC Fields
Appendix F – Resolution regarding ERC transfer from the Butte County AQMD
Appendix G - Resolution regarding ERC transfer from the Feather River AQMD

Colusa County APCD
100 Sunrise Blvd. Suite A-3
Colusa, Ca. 95932 : (530) 458-0595

Attachment C

Pacific Gas and Electric Company®

Power Generation
Fossil Plant Construction

915 Highland Pointe Dr., #130
Roseville, CA 95678

916.760.9837
Internal: 760.9837
Fax: 916.760.9838

November 18, 2008

CGS08-L-0006

Harry A. Krug
Director of Air Quality Standards
Colusa County Air Pollution Control District
100 Sunrise Boulevard, Suite A-3
Colusa, California 95932-3246

Subject Pacific Gas and Electric Company Colusa Generating Station Request to Modify the Determination of Compliance

Dear Mr. Krug:

After careful evaluation and a comprehensive review of the project design, Pacific Gas and Electric Company (PG&E) has determined that several changes to the Colusa Generating Station (CGS) project description are necessary. These changes have the potential to alter the conditions of the Final Determination of Compliance (FDOC) issued by Colusa County Air Pollution Control District (APCD) on June 11, 2007. Attached to this letter, as Exhibit 1, is a completed Authority to Construct Application Form and a check in the amount of $155.

The redesigned CGS project will include the following components:

- Relocation of the administrative and water treatment buildings.
- Removal of the diesel emergency generator.
- Replacement of the second fire water pump diesel engine with an electric motor driven fire pump.
- Removal of the auxiliary boiler.
- Relocation of the gas meter station to the north side of the project site.
- Addition of a natural gas water bath heating system.
- Addition of a wet surface air cooler for additional lubrication oil cooling.

Based on a review by PG&E's engineers, the proposed design changes will not require a larger construction work force or a longer construction period.

The proposed changes to the general equipment arrangement reflect a difference in design philosophies between the previous project owner and PG&E. Many of these changes stem

from PG&E's past experience in designing, operating, and maintaining power plants. The proposed changes have the added benefit of reducing overall construction and operational costs. The major changes are due to the elimination of some plant equipment and a reduction in the size or location of other equipment.

Rationale for the Proposed Changes

This section lists the proposed changes to the project design. Exhibit 2 includes a detailed plot plan of the project that includes the proposed changes, presents revised elevation drawings for the project, and revised heat and mass balance drawings for annual average and peak conditions. The major changes being proposed by PG&E are summarized below.

Reduction in the Combustion Turbine $PM_{10/2.5}$ Emission Rate

Consistent with PG&E's agreement with the U.S. Forestry Service, the combustion turbine generator's (CTG) $PM_{10/2.5}$ emission rate has been reduced from 20.1 pounds per hour per unit to 13.5, resulting in an annual reduction in PM emissions of 38.7 tons per year.

Eliminate the Diesel Emergency Generator

The diesel emergency generator was intended to provide emergency electrical power to operate critical controls and systems in the event of electrical interruption. However, due to the parasitic electrical demand required for a dry cooled plant (approximately 2.5 megawatts), the emergency generator is significantly undersized. As a result, PG&E proposes to connect CGS to the two adjacent 230-kilovolt (kV) transmission lines at the north and south switchgear. Furthermore, PG&E will keep interconnected to the 12-kV distribution line that will supply CGS with electrical power during construction. The potential of these three redundant electrical sources being out of service at the same time is highly unlikely. Therefore, PG&E has determined that the emergency generator is no longer required.

Replace the Diesel Fire Pump with an Electric Fire Pump

The CGS was permitted with two 100-percent-redundant firewater pumps (one electric and one diesel-fired) to ensure that fire water is available during emergencies. PG&E has identified a solution for the issue of emergency electrical power through interconnection of the CGS with redundant electrical sources (the two 230-kV transmission lines and the 12-kV distribution line). PG&E has requested the Colusa County Fire Marshall to review the approach and the Fire Marshal has approved PG&E's electrical solution to replace the second diesel fire pump with an electric fire pump, resulting in two electric fire pumps onsite with redundant electrical sources. There will be further reduction in emissions by replacing the diesel engine with an electric motor.

Eliminate the Auxiliary Boiler

The CGS permit includes an auxiliary boiler to facilitate start up of the plant. Based on PG&E's operating experience, the benefits of using the auxiliary boiler to increate plant start up do not warrant the added capital and maintenance cost. PG&E expects that the required heat to maintain the steam turbine and heat recovery steam generators (HRSG) in a start-ready condition can be extracted from the HRSG's high pressure drum. Therefore, PG&E is proposing that the auxiliary boiler be eliminated from the CGS project description.

Relocate the Natural Gas Metering Station

As with other changes to the CGS general arrangement, the relocation of the natural gas metering station to the north side of the plant will provide PG&E with a more logical plant layout.

Incorporate a Natural Gas Water Bath Heater System

The natural gas supply supplied to the CGS is expected to have some condensation in the pipeline when the gas temperature falls below the dew point of approximately 42°F. PG&E has established a minimum natural gas fuel temperature of 45°F in order to avoid operational issues. The natural gas will be supplied at a pressure of 900 pounds per square inch gauge (psig), and the CGS will require the pressure to be reduced to approximately 500 psig. This pressure reduction is estimated to cause a 28°F decrease in the natural gas temperature (7°F decrease for each 100 psig pressure reduction). Therefore, PG&E has determined that fuel gas heating is required. PG&E proposes to install a water bath heating system to maintain the natural gas temperature for the CGS at approximately 75°F. A schematic and specifications for the water bath heater are included in Exhibit 2.

Incorporate a Wet Surface Air Cooler

The steam turbine lubricating oil system utilizes a fin-fan cooling system (similar to an automotive radiator). This system has reduced cooling capacity during warmer ambient conditions. PG&E has determined through its design review process that additional steam turbine lubricating oil cooling may be necessary, and proposes to install a wet surface air cooler (WSAC) to provide this additional cooling capacity. The WSAC operates by passing the lubricating oil through heat transfer tubes in the WSAC and spraying the tubes with cooled water. Similar to a cooling tower, air is drawn into the WSAC from the sides and exhausted through the top of the cooler. Cooling is achieved from the evaporation of the water off the heat transfer tubing. Exhibit 2 contains the specifications for the WSAC system. The WSAC unit may be exempt from APCD permitting requirements based on Rule 3.3 (d)(3).

Changes in Air Emissions

The reduction in the combustion turbine $PM_{10/2.5}$ emission rate and the elimination of the auxiliary boiler, emergency diesel-fired generator, and diesel-fired fire pump will result in a reduction in potential criteria and hazardous air pollutant air emissions.

The addition of the water bath fuel gas heater will result in a slight increase in air emissions. The water bath heater is expected to have a maximum heat input rating of 10 million British thermal units (MMBtu) per hour and will be exclusively fired on pipeline quality natural gas. The heater will include a low oxides of nitrogen burner that will limit NOx and CO emissions to 30 and 100 parts per million by volume (ppmvd) corrected to 3 percent oxygen, respectively. The heater is expected to operate 8,760 hours per year. Emission estimates for the water bath fuel gas heater are presented in Table 1.

TABLE 1
PG&E CGS Water Bath Fuel Gas Heater

	Emissions				
Pollutant	lb/MMBtu	lb/hour	lb/day	lb/year	ton/year
NO_x	0.039	0.39	9.38	3,425.5	1.713
CO	0.079	0.79	19.0	6,945.2	3.473
SO_2[a]	0.003	0.028	0.67	245.1	0.123
VOC	0.003	0.027	0.66	240.5	0.120
$PM_{10/2.5}$	0.003	0.029	0.71	257.6	0.129

[a] Peak SO_2 based on 1.0 gr/100 scf.

The WSAC operates by spraying fresh water (from the Glenn Colusa canal) on an internal heat exchanger containing lubricating oil while drawing air into the unit to evaporate the water off the heat exchanger. The air, evaporated water, and entrained water droplets are vented to the atmosphere. Air emissions result from water droplets entrained in the discharge air that contain dissolved solids that when dehydrated can form particulate matter. Estimated particulate matter emissions for the WSAC are presented in Table 2, and assume that 100 percent of the total dissolved solids in the WSAC water is emitted as particulate matter ($PM_{10/2.5}$). The WSAC is only expected to be used during warmer ambient conditions. However, the emissions estimate presented in Table 2 reflect operation of the unit for 8,760 hours per year, resulting in a conservative estimate of the annual emissions. The WSAC PM10 emissions are based on a make-up water TDS of 200 parts per million, a

recirculation rate of 8,000 gallons per minute (based on a water spray of 1,960 gpm per cell and 4 cells), a drift elimination rate of 0.005 percent, and 6 cycles of concentration.

TABLE 2
PG&E CGS Wet Surface Air Cooler Emission Estimate

	Emissions			
Pollutant	Lb/hr	lb/day	lb/yr	ton/yr
PM10	0.24	5.76	2,102.4	1.051

Tables 3 summarizes the revised hourly emissions of criteria pollutants generated from operational activities as a result of the elimination of the auxiliary boiler, emergency generator and firewater pump, the reduced $PM_{10}/PM_{2.5}$ emissions from the CTGs and the addition of the water bath heater and the WSAC. A calculation of the emissions from the modified project including the CTGs, the water bath heater and the PM_{10} emissions from the WSAC is included in Exhibit 2.

TABLE 3
PG&E CGS Change in Maximum Hourly Emissions, lb/hour

	Emissions, lb/hour				
Operational Source	**NO_x**	**SO_x**	**CO**	**VOC**	**$PM_{10}/PM_{2.5}$**
Auxiliary Boiler[a]	(0.48)	(0.13)	(1.63)	(0.18)	(0.33)
Emergency Generator[a]	(13.88)	(0.01)	(0.32)	(0.15)	(0.09)
Firewater Pump[a]	(1.98)	(<0.01)	(0.22)	Incl in NOx	(0.08)
CTGs	No change	No change	No change	No change	27[b]
Water Bath Heater	0.391	0.028	0.793	0.027	0.029
WSAC	—	—	—	—	0.24

TABLE 3
PG&E CGS Change in Maximum Hourly Emissions, lb/hour

	Emissions, lb/hour				
Operational Source	**NO_x**	**SO_x**	**CO**	**VOC**	**$PM_{10}/PM_{2.5}$**

Negative values shown in parentheses.

[a] Source eliminated. Value from FDOC Conditions 23 and 24.

[b] Previous value was 40.2 lb/hr for both turbines (Condition 27), revised value is 27 lb/hr (13.5 lb/hr per turbine) yielding a reduction of 13.2 lb/hr combined for both turbines.

The maximum daily CTG emissions $PM_{10/2.5}$ emissions are expected to be 324 pounds per day per CTG. This maximum emission rate results from 100 percent CTG operation and maximum duct burner firing for 24 hours at an ambient air temperature of 114 °F. The change in daily emissions is presented in Table 4 for the CTG, water bath heater, and WSAC. The WSAC unit may be exempt from APCD permitting requirements based on Rule 3.3 (d)(3).

TABLE 4
PG&E CGS Change in Maximum Daily Emissions per CTG, lb/day

	Emissions, lb/day				
Operational Source	**NO_x**	**SO_x**	**CO**	**VOC**	**$PM_{10}/PM_{2.5}$**
CTGs	No change	No change	No change	No change	324
Water Bath Heater	9.38	0.672	19.032	0.648	0.696
WSAC	—	—	—	—	5.76

Table 5 presents the maximum expected daily increase in air emissions and a comparison of each emission unit separately to the APCD's Best Available Control Technology Thresholds contained in Rule 3.6(c)(1).

TABLE 4
PG&E CGS Comparison of the Maximum Daily Emissions to the APCD BACT Thresholds, lb/day

	Emissions, lb/day				
Operational Source	**NO_x**	**SO_x**	**CO**	**VOC**	**$PM_{10}/PM_{2.5}$**
CTGs	0	0	0	0	-316.8
Water Bath Heater	9.38	0.672	19.032	0.648	0.696
WSAC[a]	—	—	—	—	5.76
APCD BACT Threshold Per Source	**25**	**80**	**500**	**25**	**80**
BACT Required for any Source (Yes/No)	**No**	**No**	**No**	**No**	**No**

[a] The WSAC may be an exempt unit per Rule 3.3(d)(3).

The annual estimated emissions for the proposed changes to the CGS project are presented in Table 5, including a comparison of the new potential and permitted emissions. The difference in permitted emissions verses the new potential emissions shows that a small increase in CO and VOC emissions is expected, a slight decrease in NOx and SO_2 emissions, and a significant decrease in particulate matter emissions. The potential increase in criteria emissions are below the PSD Significant Emission Rate (SER) threshold requiring PSD review. PG&E is submitting a request to modify the facility's PSD permit directly to U.S. EPA Region IX (with a copy to the APCD).

TABLE 5
PG&E CGS Potential Emission Increase

Pollutant	New Potential Emissions Tons/Year	Permitted Emissions Tons/year	Difference Tons/year	PSD SER Threshold Tons/year	PSD Review
NO_X	184.71	184.87	-0.16	40	No
CO	272.24	267.52	4.72	100	No
VOC	48.51	47.77	0.74	40	No

TABLE 5
PG&E CGS Potential Emission Increase

Pollutant	New Potential Emissions Tons/Year	Permitted Emissions Tons/year	Difference Tons/year	PSD SER Threshold Tons/year	PSD Review
NO_X	184.71	184.87	-0.16	40	No
$PM_{10/2.5}$	103.34	142.08	-38.74	25/15	No
SO_2	15.49	15.62	-0.13	40	No

Notes: Assumes same operating schedule as included in the FDOC. The permitted emissions from FDOC Condition 26.

PG&E expects to work with the APCD to identify an ERC package that will satisfy the APCD's Rule 3.6 and the California Energy Commissions California Environmental Quality Act requirements for mitigation. In order to facilitate modification of the FDOC, PG&E has included as Exhibit 3 its proposed changes to the FDOC conditions. The sizable reduction in $PM_{10/2.5}$ shown in Table 5, distributed linearly across all four quarters of the year, is included in Exhibit 3 as a reduction in potential emissions and corresponding ERCs.

If you have any questions, please call me or Jerry Salamy of CH2M HILL (916-286-0207) to discuss.

Sincerely,

Jon Maring
Senior Director, New Generation

cc: Dale Rundquist/CEC
Shaheerah Kelly/US EPA Region IX
Tom Miller/CGS Project Manager

Attachments
File No. 3.1.5.1

Colusa County APCD
100 Sunrise Blvd. Suite A-3
Colusa, Ca. 95932 : (530) 458-0595

Attachment D

VIII PERMIT CONDITIONS - 3/2/2009

1) All facility operating staff shall be advised of and familiar with these permit conditions.

2) The "Right of Entry", as provided by the California Health and Safety Code Section 41510 of Division 26, shall apply at all times.

3) In the case of shut-down or re-start of air pollution control equipment for necessary scheduled maintenance, the intent to shut down such equipment shall be reported to the Air Pollution Control Officer at least twenty-four (24) hours prior to the planned shutdown. Such notification does not exempt the facility from complying with all permit limits and requirements.

4) If any upset or breakdown occurs with equipment under permit in such a manner that may cause excess emissions of air contaminants, the APCO shall be notified of such failure or breakdown within twenty-four (24) hours or by 9:00 a.m. by the following working day. The person responsible shall also submit a written statement of full disclosure of the upset/breakdown to the District within 72 hours. The report shall contain the date, time, duration, estimated emissions, cause, and remedy.

5) Fugitive emissions, including dust and odors shall be controlled at all times such that a nuisance is not created at any point beyond the facility's property lines.

6) A person shall be designated to oversee the fugitive dust control program described in the application and this document. Entry roads to the proposed facility site will be paved prior to commencing construction. During construction, the people onsite shall access real-time weather information from the Western Weather Group to determine the prevailing local wind speed. If wind gusts at the Maxwell weather station exceed 15 mph construction personnel shall increase the frequency of watering the exposed soil. All of the mitigation measures will be implemented.

7) The placement of the source testing ports shall be as specified in 40 CFR Part 60, Appendix A, Method 1. A source test protocol shall be submitted to the District, for approval by the Air Pollution Control Officer (APCO), at least 45 days prior to conducting the annual source tests. The District shall be notified at least 10 days prior to actual source testing.

8) Stack gas testing, using EPA, ARB or other APCO approved methods, shall be required on an annual basis for NOx, VOC and CO on the HRSG stacks. The HRSG stacks and the auxiliary boiler stack shall also be tested for SOx and PM_{10} emissions during the first year and if requested by the APCO in subsequent years. The natural gas water bath heater shall be tested for NOx, SOx, VOC, CO, and PM_{10} during the first year and thereafter only as requested by the APCO.

9) Annual testing of the HRSG stacks shall include quantification of formaldehyde and ammonia (NH_3) emissions for compliance with permit limits. The facility owner/operator shall verify, by continuous recording, the ammonia injection rate to the system. The ammonia source test shall be conducted over the expected operating range of the turbine (including, but not limited to 50%, 75%, and 100% load) to establish the range of ammonia injection rates necessary to achieve NOx emission reductions while maintaining ammonia slip levels. The source test shall also determine the correlation between the heat input rates of each gas turbine and ammonia mass emissions.

10) The gas turbines, duct burners, and natural gas water bath heater shall be fired exclusively on pipeline quality natural gas.

11) The annual average sulfur content in the natural gas used at the facility shall be less than or equal to 0.3 grains per 100 scf. Monthly testing, at the site, using approved methods (i.e., EPA 19 and ASTM D-3246) is required to determine the sulfur content of the natural gas. Pacific Gas and Electric natural gas testing data from Burney shall also be reviewed and provided to the District.

12) The sulfur content limit in diesel fuel used in the construction equipment shall be no more than 15 ppm.

13) All applicable federal standards and test procedures of Subpart KKKK--Standards of Performance for Stationary Combustion Turbines shall be met.

14) The CTGs shall meet a VOC limit of 2.0 ppmvd with duct burner firing and 1.38 ppmvd without duct burner firing @ 15% O_2 averaged over one hour. Maximum hourly steady state emission limits for each CTG are:

Pounds VOC with Duct Firing	Pounds VOC without Duct Firing
7.2	3.4

15) The CTGs shall meet a NOx limit of 2.0 ppmvd @ 15% O_2 averaged over one hour except during commissioning. Maximum hourly steady state emission limits for each CTG are:

Pounds NOx with Duct Firing	Pounds NOx without Duct Firing
20.7	15.3

16) The CTGs shall meet a CO limit of 3.0 ppmvd @ 15% O_2 over a three-hour rolling average except during commissioning. Maximum hourly steady state emission limits for each CTG are:

Pounds CO with Duct Firing	Pounds CO without Duct Firing
18.9	14.0

17) The natural gas water bath heater shall have a low NOx burner and shall meet a NOx limit of 30.0 ppmvd @ 3% O_2 averaged over one hour.

18) Ammonia slip shall be limited to 5.0 ppmvd @ 15% O_2 averaged over one hour. Formaldehyde emissions will be limited to 0.917 lbs per MMscf of natural gas. Maximum hourly steady state emission limits for each CTG are:

Pounds NH_3 with Duct Firing	Pounds NH_3 without Duct Firing
19.2	14.2

19) Continuous emission monitoring (CEM) systems shall be installed to sample, analyze,

and record NO_x, CO, O_2 concentration in the exhaust gas of both HRSG stacks. This system will generate reports of emissions data in accordance with permit requirements and will send alarm signals to the plant distributed control system (DCS) control room when the level of emissions approaches or exceeds pre-selected limits. Relative accuracy test audits shall be conducted annually to verify performance of the CEM system.

20) The Colusa County APCD shall have remote access to the data logger at the facility to enable District staff to monitor real-time emissions as recorded by the CEMs.

21) The CEMs shall be installed, calibrated and operational prior to the first firing of the gas turbines. The commissioning phase of the turbines and heat recovery steam generators without abatement of emissions shall not exceed 500 total hours. All reasonable efforts will be made to shorten the length of time of the commissioning phase. Only one gas turbine may be commissioned at a time. Emissions from the commissioning phase of the turbines and heat recovery steam generators shall accrue toward the quarterly and annual emission limits specified in these conditions.

22) Quarterly reports of CEM and process data, including startup information, shall be submitted to the District within 30 days after the end of each quarter. Format of the data submission will be determined by the District and may include both electronic spreadsheet and hard copy files.

23) The emissions from the natural gas water bath heater shall not exceed the hourly limits established in the table below.

One Hour Maximum Emissions (lbs)	
Source	**Bath Heater**
NO_X	**0.39**
CO	0.79
VOC	0.03
PM_{10}	0.03
SO_2	0.03

24) The total emissions from the CTGs and HRSGs shall not exceed those established below for hourly and daily operations.

Maximum Emissions Both Turbines (lbs)		
Pollutant	**1-Hour Emissions**	**24-Hour Emissions**
NO_X	666.60	2,994.60
CO	967.00	7,659.00
VOC	55.40	630.60
PM_{10}	27.00	648.00
SO_2	14.80	355.20

25) The total emissions from the Colusa Power Plant shall not exceed the limits established below.

Quarterly and Annual Estimated Combustion Emissions from CGS Facility					
Pollutant	**1st Quarter Emissions (tons)**	**2nd Quarter Emissions (tons)**	**3rd Quarter Emissions (tons)**	**4th Quarter Emissions (tons)**	**Annual Emissions (tons)**
NO_x	**45.56**	43.58	51.30	44.27	184.70
CO	54.29	52.49	107.15	53.95	267.89
VOCs	**12.30**	11.63	11.84	11.76	47.54
PM_{10}	25.54	25.78	26.02	26.02	103.36
SO_2	4.07	3.85	3.89	3.89	15.69

26) Offsets for the Colusa Generating Station power plant shall be in effect prior to operation of the facility and will not be less than the following amounts at any time. The offsets presented in the first table below do not reflect distance factor adjustments, the 1.4 to 1 VOC:NOx interpollutant ratio nor the 25 tons per year emission allowance. No less than 5.08 tons of PM_{10} ERCs per quarter will be provided prior to start of construction activities to offset PM_{10} construction emissions.

Emission Offsets by Calendar Quarter (not adjusted)					
Pollutant in tons	Quarter 1	Quarter 2	Quarter 3	**Quarter 4**	**Annual Tons**
Oxides of nitrogen (NO_2)	36.79	35.41	31.36	37.93	141.49
Volatile organic compounds (CH_4)	39.89	39.89	39.89	39.89	159.56
Particulate Matter PM_{10}	30.43	28.33	22.15	31.75	112.66

Emission Offsets by Calendar Quarter (adjusted for distance and interpollutant ratio)					
Pollutant in tons	Quarter 1	Quarter 2	Quarter 3	**Quarter 4**	**Annual Tons**
Oxides of nitrogen (NO_2)	26.20	24.99	21.52	27.12	99.83
Volatile organic compounds (CH_4)	26.59	26.59	26.59	26.59	106.36
Particulate Matter PM_{10}	21.22	19.73	15.21	22.20	78.36

27) The construction of the facility cannot commence until all construction permits, including the USEPA PSD permit are obtained. Specified, limited construction activities are allowed prior to issuance of the PSD permit as stated in the USEPA policy document dated December 18, 1978.

28) Total facility emissions of Toxic Air Contaminants (TACs) shall not exceed 10 tons per year for any single pollutant except ammonia, formaldehyde and propylene.

Authorized By: _____
Harry A. Krug
Air Pollution Control Officer

Colusa County APCD
100 Sunrise Blvd. Suite A-3
Colusa, Ca. 95932 : (530) 458-0595

Attachment E

COLUSA GENERATING STATION
PREVENTION OF SIGNIFICANT DETERIORATION PERMIT
PROPOSED PERMIT CONDITIONS

PSD Permit No.: SAC 06-01

PROJECT DESCRIPTION

The Prevention of Significant Deterioration (PSD) permit was issued on September 29, 2009 for the Colusa Generating Station (CGS). This revised permit incorporates design changes for the project into the permit. The project will consist of two combustion turbine generators (CT), each vented to a heat recovery steam generator (HRSG). The facility will also consist of a single condensing reheat steam turbine generator (STG), dry cooling tower technology, and other associated equipment. Each HRSG will be equipped with a duct burner. Each of the CTs will be equipped with dry low NOx (DLN) combustors. The facility will install selective catalytic reduction (SCR) and oxidation catalyst systems. Pacific Gas & Electric Company (Permittee) will construct and operate CGS. The project is subject to the PSD program for nitrogen oxides (NO_x), carbon monoxide (CO), volatile organic compounds (VOC), particulate matter (PM), and particulate matter less than 10 microns (PM_{10}).

EQUIPMENT DESCRIPTION

Emission Unit Id.	Description
EU-1	One (1) natural gas-fired CT generator rated at 172 MW, vented to a HRSG with a 688 MMBtu/hr duct burner
EU-2	One (1) natural gas-fired CT generator rated at 172 MW, vented to a HRSG with a 688 MMBtu/hr duct burner
EU-3	One (1) natural gas-fired 10 MMBtu/hr water bath heater
EU-4	One (1) 8,000 gpm wet surface air cooler

PERMIT CONDITIONS

I. Permit Expiration

As provided in 40 CFR 52.21(r), this PSD Permit shall become invalid if construction:

A. is not commenced (as defined in 40 CFR 52.21(b)(9)) within 18 months after the approval takes effect; or

B. is discontinued for a period of 18 months or more; or

C. is not completed within a reasonable time.

II. Permit Notification Requirements

Permittee shall notify EPA Region 9 in writing or by electronic mail of the:

A. date construction is commenced, postmarked within 30 days of such date.

B. actual date of initial startup, as defined in Condition X.E.7., postmarked within 15 days of such date.

C. date upon which initial performance tests will commence, in accordance with the provisions of Condition X.F.1., postmarked not less than 30 days prior to such date. Notification may be provided with the submittal of the performance test protocol required pursuant to Condition X.F.2.

D. date upon which initial performance evaluation of the CEMS will commence in accordance with 40 CFR 60.13(c), postmarked not less than 30 days prior to such date. Notification may be provided with the submittal of the CEMS performance test protocol required pursuant to Condition X.C.6.

III. Facility Operation

At all times, including periods of startup, shutdown and malfunction, Permittee shall, to the extent practicable, maintain and operate the facility including associated air pollution control equipment in a manner consistent with good air pollution control practice for minimizing emissions. Determination of whether acceptable operating and maintenance procedures are being used will be based on information available to the EPA which may include, but is not limited to, monitoring results, opacity observations, review of operating maintenance procedures and inspection of the source.

IV. Malfunction Reporting

A. Permittee shall notify EPA by facsimile or electronic mail at R9.AEO@epa.gov within two (2) working days following the discovery of any failure of air pollution control equipment, process equipment, or of a process to operate in a normal manner, which results in an increase in emissions above the allowable emission limits stated in Section X.D. of this permit.

B. In addition, Permittee shall notify EPA in writing or electronic mail within fifteen (15) days of any such failure described under Condition IV.A. The notification shall include a description of the malfunctioning equipment or abnormal operation, the date of the initial malfunction, the period of time over which emissions were increased due to the failure, the cause of the failure, the estimated resultant emissions in excess of those allowed in Section X.D., and the methods utilized to mitigate emissions and restore normal operations.

C. Compliance with this malfunction notification provision shall not excuse or otherwise constitute a defense to any violation of this permit or any law or regulation such malfunction may cause.

V. Right of Entry

The EPA Regional Administrator, and/or an authorized representative, upon the

presentation of credentials, shall be permitted:

A. to enter the premises where the source is located or where any records are required to be kept under the terms and conditions of this PSD Permit; and

B. during normal business hours, to have access to and to copy any records required to be kept under the terms and conditions of this PSD Permit; and

C. to inspect any equipment, operation, or method subject to requirements in this PSD Permit; and

D. to sample materials and emissions from the source(s).

VI. Transfer of Ownership

In the event of any changes in control or ownership of the facilities to be constructed, this PSD Permit shall be binding on all subsequent owners and operators. Permittee shall notify the succeeding owner and operator of the existence of this PSD Permit and its conditions by letter, a copy of which shall be forwarded to EPA Region 9.

VII. Severability

The provisions of this PSD Permit are severable, and, if any provision of the PSD Permit is held invalid, the remainder of this PSD Permit shall not be affected.

VIII. Other Applicable Regulations

Permittee shall construct and operate this project in compliance with this PSD permit and all other applicable federal, state, and local air quality regulations. This PSD permit does not release the Permittee from any liability for compliance with other applicable federal, state and local environmental laws and regulations, including the Clean Air Act.

IX. Reserved

X. Special Conditions

A. Reserved

B. Air Pollution Control Equipment and Operation

1. Prior to initial startup, as defined in Condition X.E.7, Permittee shall install, and thereafter continuously operate and maintain:

   a. Dry Low NO_x Burners, Selective Catalytic Reduction (SCR) and Oxidation Catalyst units to control NO_x and CO emissions from EU-1 and EU-2; and

   b. A low NO_x burner for EU-3.

2. The aforementioned "continuous periods of operation" do not include periods of shakedown, startup and shutdown, as defined in Condition X.E. except as required by Condition X.B.3.

3. During any turbine startup, ammonia injection shall be initiated as soon as the SCR catalyst temperature exceeds 500 degrees F.

4. The SCR units for EU-1 and EU-2 shall be designed to meet a NO_x emission limit of no more than 2.0 ppmvd (1-hr average) corrected to 15 percent O_2, for the life of the SCR catalyst.

5. Permittee shall ensure that the duct burners are not operated unless the associated turbine units are in operation.

C. **Continuous Monitoring Systems**

1. At the earliest feasible opportunity, in accordance with the recommendations of the equipment manufacturer and the construction contractor, Permittee shall install, and thereafter operate, maintain, certify, and quality-assure a continuous emission monitoring system (CEMS) for each CT which measures stack gas NO_x, CO and O_2 concentrations in ppmv. The pollutant concentrations shall be corrected to 15 percent O_2 on a dry basis.

2. The NO_x and O_2 CEMS shall meet the applicable requirements of 40 CFR Part 60 Appendix B, Performance Specifications 2 and 3, and 40 CFR Part 60 Appendix F, Procedure 1. The operator may use the procedures in the Linearity Check of 40 CFR Part 75, Appendix A, section 6.2 in lieu of the cylinder gas audit procedures in 40 CFR Part 60, Appendix F, Procedure 1.

3. The CO CEMS shall meet the applicable requirements of 40 CFR Part 60 Appendix B, Performance Specification 4, and 40 CFR Part 60 Appendix F, Procedure 1, except the relative accuracy specified in section 13.2 of 40 CFR Part 60 Appendix B, Performance Specification 4 shall not exceed 20 percent.

4. The performance evaluation of the CEMS may either be conducted separately, as specified in 40 CFR 60.4405(b)(5), or as part of the initial performance test of each emission unit.

5. The CEMS shall complete a minimum of one cycle of operations (sampling, analyzing and data recording) for each successive 15-minute period.

6. Permittee shall submit a CEMS performance test protocol to the EPA no later than 30 days prior to the test date to allow review of the test plan and to arrange for an observer to be present at the test. The performance test shall be conducted in accordance with the submitted protocol, and any changes required by EPA.

7. Permittee shall furnish the EPA a written report of the results of performance tests within 60 days of completion.

8. The stack gas volumetric flow rates shall be calculated in accordance with the fuel flow meter requirements of 40 CFR Part 75 Appendix D in combination with the appropriate parts of EPA Method 19.

9. Prior to the date of initial startup (as defined in this PSD permit), Permittee shall install, and thereafter maintain and operate, in accordance with X.C.1., continuous monitoring and recording systems to measure and record the following operational parameters:

   a. The ammonia injection rate of the ammonia injection system.

   b. Exhaust gas temperature at the inlet to the SCR reactor.

D. Emission and Operational Limits

The following emission and operational limits shall apply at all times, except as provided below:

1. Total annual emissions from EU-1, EU-2, EU-3, and EU-4 shall not exceed the following:

   a. 184.7 tons NO_x per rolling 12-month period

   b. 267.9 tons CO per rolling 12-month period

   c. 47.4 tons VOC per rolling 12-month period

   d. 103.4 tons PM per rolling 12-month period

   e. 103.4 tons PM_{10} per rolling 12-month period

2. Daily emissions from each CT (EU-1 and EU-2) shall not exceed the following:

   a. 1,497.3 lbs NO_x per day

   b. 3,829.5 lbs CO per day

   c. 315.3 lbs VOC per day

   d. 324 lbs of PM per day

   e. 324 lbs of PM_{10} per day

3. Emissions from each CT (EU-1 and EU-2) shall not exceed the following, except as provided by the provisions of Condition X.E.:

   a. 19.6 lbs of NO_x per hour or 2.0 ppmvd NO_x, corrected to 15 percent O_2, averaged over any 1-hour period

   b. 17.9 lbs of CO per hour or 3.0 ppmvd CO, corrected to 15 percent O_2, averaged over any consecutive 3-hour period

   c. 11.0 lbs of VOC per hour or 2.0 ppmvd VOC, corrected to 15

percent O_2, averaged over any 1-hour period

d. 13.5 lbs of PM per hour

e. 13.5 lbs of PM_{10} per hour

4. Emissions from EU-3 shall not exceed the following:

a. 0.39 lbs of NO_x per hour or 30.0 ppmvd NO_x, corrected to 3 percent O_2, averaged over any consecutive 3-hour period

b. 0.79 lbs of CO per hour or 100.0 ppmvd CO, corrected to 3 percent O_2, averaged over any consecutive 3-hour period

c. 0.027 lbs of VOC per hour or 7 ppmvd VOC, corrected to 3 percent O_2, averaged over any consecutive 3-hour period

d. 0.029 lbs of PM per hour

e. 0.029 lbs of PM_{10} per hour

5. Emissions from EU-4 shall not exceed the following:

a. 0.24 lbs PM_{10} per hour from EU-4

E. **Requirements during Shakedown, Startup and Shutdown Periods**

The CT emission limits in Section X.D.3. shall not apply during CT shakedown, startup and shutdown periods. During shakedown, startup and shutdown periods, the following requirements shall apply:

1. The CEMS shall be in operation during each startup and shutdown period.

2. No more than one CT shall be in startup mode at any time.

3. Duration of cold startups shall not exceed 270 minutes, warm startups shall not exceed 180 minutes, and hot startups shall not exceed 90 minutes per occurrence.

4. Duration of shutdowns shall not exceed 30 minutes per occurrence.

5. While in a startup or shutdown period, exhaust emissions for each CT shall not exceed the limits in the following table:

Pollutant	Cold Startup		Warm Startup		Hot Startup		Shutdown	
	lb/hour	lb/event	lb/hour	lb/event	lb/hour	lb/event	lb/hour	lb/event
NO_x	333.3	779.10	152.0	456.20	249.90	259.90	115.0	115.0
CO	373.6	1355.6	370.3	790.5	429.6	679.6	483.5	483.5
VOC	27.7	106.7	27.7	47.4	27.7	38.0	23.9	23.9
SO_2	0.40	1.01	0.40	0.58	0.40	0.33	0.20	0.20
PM/PM_{10}	12.0	48.8	12.0	30.8	12.0	12.8	6.0	6.0

6. The time, date and duration of each startup and shutdown event shall be recorded. The records shall include lbs/hour emission calculations based on the CEMS data. These records shall be kept for five years following the date of such events.

7. For CTs, "initial startup" shall be defined as the first fire of each unit.

8. Shakedown shall be defined as the period beginning with initial startup and ending no later than initial performance testing, during which the Permittee conducts operational and contractual testing and tuning to ensure the safe, efficient and reliable operation of the plant.

9. Startup shall be defined as the period beginning with ignition and lasting until the equipment has reached a continuous operating level and meets permit limits specified in Condition X.D.3. Cold startup means a startup when the combustion turbine has not been in operation during the preceding 72 hours. Hot startup means a startup when the combustion turbine has been in operation during the preceding 8 hours. Warm startup means a startup that is not a hot or cold startup.

10. Shutdown shall be defined as the period beginning with the lowering of equipment from base load and lasting until fuel flow is completely off and combustion has ceased.

11. Compliance with the PM/PM_{10} and SO_2 emission limits that apply during startup and shutdown periods may be demonstrated by compliance with Condition X.I.1.

12. Compliance with the VOC limits that apply during startup and shutdown periods shall be based on compliance with the CO limits during the startup and shutdown periods.

F. **Performance Tests**

1. Within 60 days after achieving the maximum production rate the facility will operate at, but not later than 180 days after the initial startup of equipment, and annually thereafter (within 30 days of the initial performance test anniversary), Permittee shall conduct performance tests (as described in 40 CFR 60.8) for NO_x, CO, VOC, PM, and PM_{10} emissions from each gas turbine. The annual test shall be performed in accordance with the requirements of 40 CFR Part 60, Appendix F, Procedure 1, Section 5.1.1.

2. Permittee shall submit a performance test protocol to EPA no later than 30 days prior to the test to allow review of the test plan and to arrange for an observer to be present at the test. The performance test shall be conducted in accordance with the submitted protocol, and any changes required by EPA.

3. Performance tests shall be conducted in accordance with the test methods set forth in 40 CFR 60.8 and 40 CFR Part 60, Appendix A, as modified below:

   a. EPA Methods 1-4 and 7E if NO_x emissions are measured in ppmv.

   b. EPA Methods 1-4, 7E, and 19 if NO_x emissions are measured on a heat input basis.

   c. EPA Methods 1-4 and 10 for CO emissions.

   d. EPA Methods 25A or 25B for VOC emissions.

   e. EPA Methods 1-4 and 5 for PM emissions.

   f. EPA Methods 1-4, 5 and 202 – as modified below, for PM_{10} emissions:

      i. EPA Method 202 test methodology must include the following:

         (A) A one-hour nitrogen purge,

         (B) The alternative procedure described in section 8.1 to neutralize the sulfuric acid,

         (C) Evaporation of the last 1 ml of the inorganic fraction by air drying following evaporation of the bulk of the impinger water in a 105 °C oven as described in the first sentence of section 5.3.2.3., and

         (D) Each test run period shall be 2 hours.

      ii. In lieu of Method 202, the Permittee may use EPA Conditional Test Methods for particulate matter: CTM-039

or CTM-040.

g. In lieu of the specified test methods, alternative methods may be used with prior written approval from EPA.

4. In addition to the performance test for NO_2 required in condition X.F.1, the initial performance test conducted after 'initial startup' shall use the test procedures for a 'high NO_2 emission site,' as specified in San Diego Test Method 100, to measure NO_2 emissions. The source shall be classified as either a 'low' or 'high' NO_2 emission site based on these test results. If the emission source is classified as a:

   a. 'high NO_2 emission site,' then each subsequent performance test shall use the test procedures for a 'high NO_2 emission site,' as specified in San Diego Test Method 100.

   b. 'low NO_2 emission site,' then the test procedures for a 'high NO_2 emission site,' as specified in San Diego Test Method 100, shall be performed once every five years to verify the source's classification as a 'low NO_2 emission site.'

5. The performance test methods specified in Condition X.F.3., may be modified as follows:

   a. Perform a minimum of 9 reference method runs, with a minimum time per run of 21 minutes, at a single load level, between 90 and 100 percent of peak (or the highest physically achievable) load.

   b. Use the test data both to demonstrate compliance with the applicable NO_x emission limit and to provide the required reference method data for the RATA of the CEMS.

6. For performance test purposes, sampling ports, platforms, and access shall be provided on the emission unit exhaust system in accordance with the requirements of 40 CFR 60.8(e).

7. Permittee shall furnish the EPA a written report of the results of performance tests within 60 days of completion.

8. Upon written request from the Permittee, and adequate justification, EPA may waive a specific annual test and/or allow for testing to be done at less than maximum operating capacity.

9. The CEMS shall be tested annually and quarterly in accordance with the requirements of 40 CFR 60 Appendix F, Procedure 1.

G. **Recordkeeping and Reporting**

1. Permittee shall maintain records of the hours of operation for EU-3 and EU-4.

2. Permittee shall maintain records of the fuel used in EU-1, EU-2, and EU-3.

3. Permittee shall maintain all records on site of actual operating data and emissions calculations for lb/hr, lb/event, lb/day and tpy emissions limits required in section X.D. of this PSD Permit.

4. Permittee shall maintain CEMS records that contain the following: the occurrence and duration of any startup, shutdown or malfunction, performance testing, evaluations, calibrations, checks, adjustments, maintenance, duration of any periods during which a continuous monitoring system or monitoring device is inoperative, and emission measurements.

5. Permittee shall maintain records and submit a written report of all excess emissions to EPA semi-annually. The report is due on the 30th day following the end of the calendar quarter and shall include the following:

   a. Time intervals, data and magnitude of the excess emissions, the nature and cause (if known), corrective actions taken and preventive measures adopted;

   b. Applicable time and date of each period during which the CEMS was inoperative (monitor down time), except for zero and span checks, and the nature of system repairs or adjustments; and

   c. A negative declaration when no excess emissions occurred or when the CEMS has not been inoperative, repaired, or adjusted.

6. Excess emissions shall be defined as any operating hour in which the 4-hour rolling average NO_x concentration, or the 3-hour rolling average CO concentration, as measured by the CEMS, exceeds the maximum emission limits set forth in Condition X.D.3.

7. A period of monitor down time shall be any unit operating hour in which sufficient data are not obtained to validate the hour for NO_x, CO or O_2.

8. Excess emissions indicated by the CEM system shall be considered violations of the applicable emission limit for the purpose of this permit.

9. All records required by this PSD Permit shall be retained for five years following the date of such measurements, maintenance, and reports.

H. **New Source Performance Standards**

The proposed power plant is subject to the federal regulations entitled Standards of Performance for New Stationary Sources (40 CFR Part 60). The owner or operator shall meet all applicable requirements of 40 CFR Part 60 Subparts A, Dc, IIII and KKKK.

I. **Fuel Use**

1. Permittee shall use only pipeline quality natural gas to fire EU-1, EU-2, and EU-3.
2. Permittee shall keep a monthly record of the quantity of natural gas used in EU-1, EU-2, and EU-3.
3. Permittee shall sample and record the sulfur content of the natural gas fuel on a monthly basis.
4. The monthly fuel sulfur content reading shall not exceed 0.75 grain per 100 dry standard cubic feet, and the rolling 12-month average fuel sulfur content shall not exceed 0.68 grains per 100 dry standard cubic feet.
5. The fuel sulfur content of the natural gas shall be determined using any of the following test methods: ASTM D1072, D3246, D4468, D5504 or D6667.

XI. Agency Notifications

A. Unless otherwise directed by the EPA or this permit, the owner or operator shall submit a copy of all test plans, reports, certifications, notifications, and other information pertaining to compliance with this permit to:

Director, Air Division (Attn: AIR-5)
U. S. Environmental Protection Agency Region 9
75 Hawthorne Street
San Francisco, CA 94105-3901

Email: R9.AEO@epa.gov
Fax: (415) 947-3579

B. The owner or operator shall submit permit applications, permit amendments, and other applicable permit information, which includes but not limited to installation of control equipment, replacement of an emissions unit, and changes that contravene permit terms, to:

Director, Air Division (Attn: AIR-3)
U. S. Environmental Protection Agency Region 9
75 Hawthorne Street
San Francisco, CA 94105-3901

C. Copies of all correspondence required by this PSD Permit shall be forwarded to:

Air Pollution Control Officer
Colusa County APCD
100 Sunrise Blvd. #F
Colusa, CA 95932-3246

Colusa County APCD
100 Sunrise Blvd. Suite A-3
Colusa, Ca. 95932 : (530) 458-0595

Attachment F

AMENDED
PREVENTION OF SIGNIFICANT DETERIORATION PERMIT ISSUED PURSUANT TO THE REQUIREMENTS OF 40 CFR § 52.21

U.S. ENVIRONMENTAL PROTECTION AGENCY, REGION 9

PSD PERMIT NUMBER: SAC 06-01

PERMITTEE: Pacific Gas & Electric Company
915 Highland Point Drive, Suite 130
Roseville, CA 95678

FACILITY NAME: Colusa Generating Station

FACILITY LOCATION: 4780 Dirks Road
Maxwell, CA 95955

Pursuant to the provisions of the Clean Air Act (CAA), Subchapter I, Part C (42 U.S.C. Section 7470, *et. seq.*), and the Code of Federal Regulations (CFR) Title 40, Section 52.21, the United States Environmental Protection Agency Region 9 (EPA) is issuing an Amended *Prevention of Significant Deterioration* (PSD) air quality permit to the Pacific Gas & Electric Company (PG&E). This Amended PSD Permit revises the PSD permit issued to PG&E on September 29, 2008 and amended on March 19, 2010, for the construction and operation of a new 660 mega-watt (MW) combined cycle power plant called Colusa Generating Station (CGS), in Colusa County, California.

PG&E is authorized to construct and operate the CGS power plant as described herein, in accordance with the permit application as revised (and plans submitted with the permit application), the federal PSD regulations at 40 CFR § 52.21, and other terms and conditions set forth in this Amended PSD Permit. Failure to comply with any condition or term set forth in this Amended PSD Permit will be grounds for enforcement action pursuant to Section 113 of the Clean Air Act. This permit does not relieve CGS from the obligation to comply with applicable federal, state, and Colusa County Air Pollution Control District air pollution control rules and regulations.

This Amended PSD Permit becomes effective immediately.

Deborah Jordan
Director, Air Division

3-11-2011
Date

COLUSA GENERATING STATION
PREVENTION OF SIGNIFICANT DETERIORATION PERMIT
AMENDED PERMIT CONDITIONS

PSD Permit No.: SAC 06-01

PROJECT DESCRIPTION

The Colusa Generating Station (CGS) will consist of two combustion turbine generators (CT), each vented to a heat recovery steam generator (HRSG). The facility will also consist of a single condensing reheat steam turbine generator (STG), dry cooling tower technology, and other associated equipment. Each HRSG will be equipped with a duct burner. Each of the CTs will be equipped with dry low NOx (DLN) combustors. The facility will install selective catalytic reduction (SCR) and oxidation catalyst systems. Pacific Gas & Electric Company (Permittee) will construct and operate CGS. The project is subject to the PSD program for nitrogen oxides (NO_x), carbon monoxide (CO), volatile organic compounds (VOC), particulate matter (PM), and particulate matter less than 10 microns (PM_{10}).

EQUIPMENT DESCRIPTION

Emission Unit Id.	Description
EU-1	One (1) natural gas-fired CT generator rated at 172 MW, vented to a HRSG with a 688 MMBtu/hr duct burner
EU-2	One (1) natural gas-fired CT generator rated at 172 MW, vented to a HRSG with a 688 MMBtu/hr duct burner
EU-3	One (1) natural gas-fired 10 MMBtu/hr water bath heater
EU-4	One (1) 8,000 gpm wet surface air cooler

PERMIT CONDITIONS

I. Permit Expiration

As provided in 40 CFR 52.21(r), this PSD Permit shall become invalid if construction:

A. is not commenced (as defined in 40 CFR 52.21(b)(9)) within 18 months after the approval takes effect; or

B. is discontinued for a period of 18 months or more; or

C. is not completed within a reasonable time.

II. Permit Notification Requirements

Permittee shall notify EPA Region 9 in writing or by electronic mail of the:

A. date construction is commenced, postmarked within 30 days of such date.

B. actual date of initial startup, as defined in Condition X.E.7., postmarked within 15 days of such date.

C. date upon which initial performance tests will commence, in accordance with the provisions of Condition X.F.1., postmarked not less than 30 days prior to such date. Notification may be provided with the submittal of the performance test protocol required pursuant to Condition X.F.2.

D. date upon which initial performance evaluation of the CEMS will commence in accordance with 40 CFR 60.13(c), postmarked not less than 30 days prior to such date. Notification may be provided with the submittal of the CEMS performance test protocol required pursuant to Condition X.C.6.

III. Facility Operation

At all times, including periods of startup, shutdown and malfunction, Permittee shall, to the extent practicable, maintain and operate the facility including associated air pollution control equipment in a manner consistent with good air pollution control practice for minimizing emissions. Determination of whether acceptable operating and maintenance procedures are being used will be based on information available to the EPA which may include, but is not limited to, monitoring results, opacity observations, review of operating maintenance procedures and inspection of the source.

IV. Malfunction Reporting

A. Permittee shall notify EPA by facsimile or electronic mail at R9.AEO@epa.gov within two (2) working days following the discovery of any failure of air pollution control equipment, process equipment, or of a process to operate in a normal manner, which results in an increase in emissions above the allowable emission limits stated in Section X.D. of this permit.

B. In addition, Permittee shall notify EPA in writing or electronic mail within fifteen (15) days of any such failure described under Condition IV.A. The notification shall include a description of the malfunctioning equipment or abnormal operation, the date of the initial malfunction, the period of time over which emissions were increased due to the failure, the cause of the failure, the estimated resultant emissions in excess of those allowed in Section X.D., and the methods utilized to mitigate emissions and restore normal operations.

C. Compliance with this malfunction notification provision shall not excuse or otherwise constitute a defense to any violation of this permit or any law or regulation such malfunction may cause.

V. Right of Entry

The EPA Regional Administrator, and/or an authorized representative, upon the presentation of credentials, shall be permitted:

A. to enter the premises where the source is located or where any records are required to be kept under the terms and conditions of this PSD Permit; and

B. during normal business hours, to have access to and to copy any records required to be kept under the terms and conditions of this PSD Permit; and

C. to inspect any equipment, operation, or method subject to requirements in this PSD Permit; and

D. to sample materials and emissions from the source(s).

VI. Transfer of Ownership

In the event of any changes in control or ownership of the facilities to be constructed, this PSD Permit shall be binding on all subsequent owners and operators. Permittee shall notify the succeeding owner and operator of the existence of this PSD Permit and its conditions by letter, a copy of which shall be forwarded to EPA Region 9.

VII. Severability

The provisions of this PSD Permit are severable, and, if any provision of the PSD Permit is held invalid, the remainder of this PSD Permit shall not be affected.

VIII. Other Applicable Regulations

Permittee shall construct and operate this project in compliance with this PSD permit and all other applicable federal, state, and local air quality regulations. This PSD permit does not release the Permittee from any liability for compliance with other applicable federal, state and local environmental laws and regulations, including the Clean Air Act.

IX. Reserved

X. Special Conditions

A. Reserved

B. Air Pollution Control Equipment and Operation

1. Prior to initial startup, as defined in Condition X.E.7, Permittee shall install, and thereafter continuously operate and maintain:

a. Dry Low NO_x Burners, Selective Catalytic Reduction (SCR) and Oxidation Catalyst units to control NO_x and CO emissions from EU-1 and EU-2; and

b. A low NO_x burner for EU-3.

2. The aforementioned "continuous periods of operation" do not include periods of shakedown, startup and shutdown, as defined in Condition X.E. except as required by Condition X.B.3.

3. During any turbine startup, ammonia injection shall be initiated as soon as the SCR catalyst temperature exceeds 500 degrees F.

4. The SCR units for EU-1 and EU-2 shall be designed to meet a NO_x emission limit of no more than 2.0 ppmvd (1-hr average) corrected to 15 percent O_2, for the life of the SCR catalyst.

5. Permittee shall ensure that the duct burners are not operated unless the associated turbine units are in operation.

C. **Continuous Monitoring Systems**

1. At the earliest feasible opportunity, in accordance with the recommendations of the equipment manufacturer and the construction contractor, Permittee shall install, and thereafter operate, maintain, certify, and quality-assure a continuous emission monitoring system (CEMS) for each CT which measures stack gas NO_x , CO and O_2 concentrations in ppmv. The pollutant concentrations shall be corrected to 15 percent O_2 on a dry basis.

2. The NO_x and O_2 CEMS shall meet the applicable requirements of 40 CFR Part 60 Appendix B, Performance Specifications 2 and 3, and 40 CFR Part 60 Appendix F, Procedure 1. The operator may use the procedures in the Linearity Check of 40 CFR Part 75, Appendix A, section 6.2 in lieu of the cylinder gas audit procedures in 40 CFR Part 60, Appendix F, Procedure 1.

3. The CO CEMS shall meet the applicable requirements of 40 CFR Part 60 Appendix B, Performance Specification 4, and 40 CFR Part 60 Appendix F, Procedure 1, except the relative accuracy specified in section 13.2 of 40 CFR Part 60 Appendix B, Performance Specification 4 shall not exceed 20 percent.

4. The performance evaluation of the CEMS may either be conducted separately, as specified in 40 CFR 60.4405(b)(5), or as part of the initial performance test of each emission unit.

5. The CEMS shall complete a minimum of one cycle of operations (sampling, analyzing and data recording) for each successive 15-minute period.

6. Permittee shall submit a CEMS performance test protocol to the EPA no later than 30 days prior to the test date to allow review of the test plan and to arrange for an observer to be present at the test. The performance test shall be conducted in accordance with the submitted protocol, and any changes required by EPA.

7. Permittee shall furnish the EPA a written report of the results of performance tests within 60 days of completion.

8. The stack gas volumetric flow rates shall be calculated in accordance with the fuel flow meter requirements of 40 CFR Part 75 Appendix D in combination with the appropriate parts of EPA Method 19.

9. Prior to the date of initial startup (as defined in this PSD permit), Permittee shall install, and thereafter maintain and operate, in accordance with X.C.1., continuous monitoring and recording systems to measure and record the following operational parameters:

    a. The ammonia injection rate of the ammonia injection system.

    b. Exhaust gas temperature at the inlet to the SCR reactor.

D. **Emission and Operational Limits**

The following emission and operational limits shall apply at all times, except as provided below:

1. Total annual emissions from EU-1, EU-2, EU-3, and EU-4 shall not exceed the following:

    a. 184.7 tons NO_x per rolling 12-month period

    b. 267.9 tons CO per rolling 12-month period

    c. 47.5 tons VOC per rolling 12-month period

    d. 103.4 tons PM per rolling 12-month period

    e. 103.4 tons PM_{10} per rolling 12-month period

2. Daily emissions from each CT (EU-1 and EU-2) shall not exceed the following:

    a. 1,497.3 lbs NO_x per day

    b. 3,829.5 lbs CO per day

    c. 315.3 lbs VOC per day

    d. 324 lbs of PM per day

    e. 324 lbs of PM_{10} per day

3. Emissions from each CT (EU-1 and EU-2) shall not exceed the following, except as provided by the provisions of Condition X.E.:

a. 19.6 lbs of NO_x per hour or 2.0 ppmvd NO_x, corrected to 15 percent O_2, averaged over any 1-hour period

b. 17.9 lbs of CO per hour or 3.0 ppmvd CO, corrected to 15 percent O_2, averaged over any consecutive 3-hour period

c. 11.0 lbs of VOC per hour or 2.0 ppmvd VOC, corrected to 15 percent O_2, averaged over any 1-hour period

d. 13.5 lbs of PM per hour

e. 13.5 lbs of PM_{10} per hour

4. Emissions from EU-3 shall not exceed the following:

a. 0.39 lbs of NO_x per hour or 30.0 ppmvd NO_x, corrected to 3 percent O_2, averaged over any consecutive 3-hour period

b. 0.79 lbs of CO per hour or 100.0 ppmvd CO, corrected to 3 percent O_2, averaged over any consecutive 3-hour period

c. 0.027 lbs of VOC per hour or 7 ppmvd VOC, corrected to 3 percent O_2, averaged over any consecutive 3-hour period

d. 0.029 lbs of PM per hour

e. 0.029 lbs of PM_{10} per hour

5. Emissions from EU-4 shall not exceed the following:

a. 0.24 lbs PM_{10} per hour from EU-4

E. **Requirements during Shakedown, Startup and Shutdown Periods**

The CT emission limits in Section X.D.3. shall not apply during CT shakedown, startup and shutdown periods. During shakedown, startup and shutdown periods, the following requirements shall apply:

1. The CEMS shall be in operation during each startup and shutdown period.

2. No more than one CT shall be in startup mode at any time.

3. Duration of cold startups shall not exceed 270 minutes, warm startups shall not exceed 180 minutes, and hot startups shall not exceed 90 minutes per occurrence.

4. Duration of shutdowns shall not exceed 30 minutes per occurrence.

5. While in a startup or shutdown period, exhaust emissions for each CT shall not exceed the limits in the following table:

Pollutant	Cold Startup		Warm Startup		Hot Startup		Shutdown	
	lb/hour	lb/event	lb/hour	lb/event	lb/hour	lb/event	lb/hour	lb/event
NO_x	333.3	779.10	249.9	456.20	152.0	259.90	115.0	115.0
CO	429.6	1355.6	373.6	790.5	370.3	679.6	483.5	483.5
VOC	27.7	106.7	27.7	47.4	27.7	38.0	23.9	23.9
SO_2	0.40	1.01	0.40	0.58	0.40	0.33	0.20	0.20
PM/PM_{10}	12.0	48.8	12.0	30.8	12.0	12.8	6.0	6.0

6. The time, date and duration of each startup and shutdown event shall be recorded. The records shall include lbs/hour emission calculations based on the CEMS data. These records shall be kept for five years following the date of such events.

7. For CTs, “initial startup” shall be defined as the first fire of each unit.

8. Shakedown shall be defined as the period beginning with initial startup and ending no later than initial performance testing, during which the Permittee conducts operational and contractual testing and tuning to ensure the safe, efficient and reliable operation of the plant.

9. Startup shall be defined as the period beginning with ignition and lasting until the equipment has reached a continuous operating level and meets permit limits specified in Condition X.D.3. Cold startup means a startup when the combustion turbine has not been in operation during the preceding 72 hours. Hot startup means a startup when the combustion turbine has been in operation during the preceding 8 hours. Warm startup means a startup that is not a hot or cold startup.

10. Shutdown shall be defined as the period beginning with the lowering of equipment from base load and lasting until fuel flow is completely off and combustion has ceased.

11. Compliance with the PM/PM_{10} and SO_2 emission limits that apply during startup and shutdown periods may be demonstrated by compliance with Condition X.I.1.

12. Compliance with the VOC limits that apply during startup and shutdown periods shall be based on compliance with the CO limits during the startup and shutdown periods.

F. **Performance Tests**

1. Within 60 days after achieving the maximum production rate the facility will operate at, but not later than 180 days after the initial startup of equipment, and annually thereafter (within 30 days of the initial performance test anniversary), Permittee shall conduct performance tests (as described in 40 CFR 60.8) for NO_x, CO, VOC, PM, and PM_{10} emissions from each gas turbine. The annual test shall be performed in accordance with the requirements of 40 CFR Part 60, Appendix F, Procedure 1, Section 5.1.1.

2. Permittee shall submit a performance test protocol to EPA no later than 30 days prior to the test to allow review of the test plan and to arrange for an observer to be present at the test. The performance test shall be conducted in accordance with the submitted protocol, and any changes required by EPA.

3. Performance tests shall be conducted in accordance with the test methods set forth in 40 CFR 60.8 and 40 CFR Part 60, Appendix A, as modified below:

   a. EPA Methods 1-4 and 7E if NO_x emissions are measured in ppmv.

   b. EPA Methods 1-4, 7E, and 19 if NO_x emissions are measured on a heat input basis.

   c. EPA Methods 1-4 and 10 for CO emissions.

   d. EPA Methods 25A or 25B for VOC emissions.

   e. EPA Methods 1-4 and 5 for PM emissions.

   f. EPA Methods 1-4, 5 and 202 – as modified below, for PM_{10} emissions:

      i. EPA Method 202 test methodology must include the following:

         (A) A one-hour nitrogen purge,

         (B) The alternative procedure described in section 8.1 to neutralize the sulfuric acid,

         (C) Evaporation of the last 1 ml of the inorganic fraction by air drying following evaporation of the bulk of the impinger water in a 105 ºC oven as described in the first sentence of section 5.3.2.3., and

(D) Each test run period shall be 2 hours.

ii. In lieu of Method 202, the Permittee may use EPA Conditional Test Methods for particulate matter: CTM-039 or CTM-040.

g. In lieu of the specified test methods, alternative methods may be used with prior written approval from EPA.

4. In addition to the performance test for NO_2 required in condition X.F.1, the initial performance test conducted after 'initial startup' shall use the test procedures for a 'high NO_2 emission site,' as specified in San Diego Test Method 100, to measure NO_2 emissions. The source shall be classified as either a 'low' or 'high' NO_2 emission site based on these test results. If the emission source is classified as a:

   a. 'high NO_2 emission site,' then each subsequent performance test shall use the test procedures for a 'high NO_2 emission site,' as specified in San Diego Test Method 100.

   b. 'low NO_2 emission site,' then the test procedures for a 'high NO_2 emission site,' as specified in San Diego Test Method 100, shall be performed once every five years to verify the source's classification as a 'low NO_2 emission site.'

5. The performance test methods specified in Condition X.F.3., may be modified as follows:

   a. Perform a minimum of 9 reference method runs, with a minimum time per run of 21 minutes, at a single load level, between 90 and 100 percent of peak (or the highest physically achievable) load.

   b. Use the test data both to demonstrate compliance with the applicable NO_x emission limit and to provide the required reference method data for the RATA of the CEMS.

6. For performance test purposes, sampling ports, platforms, and access shall be provided on the emission unit exhaust system in accordance with the requirements of 40 CFR 60.8(e).

7. Permittee shall furnish the EPA a written report of the results of performance tests within 60 days of completion.

8. Upon written request from the Permittee, and adequate justification, EPA may waive a specific annual test and/or allow for testing to be done at less than maximum operating capacity.

9. The CEMS shall be tested annually and quarterly in accordance with the requirements of 40 CFR 60 Appendix F, Procedure 1.

G. **Recordkeeping and Reporting**

1. Permittee shall maintain records of the hours of operation for EU-3 and EU-4.

2. Permittee shall maintain records of the fuel used in EU-1, EU-2, and EU-3.

3. Permittee shall maintain all records on site of actual operating data and emissions calculations for lb/hr, lb/event, lb/day and tpy emissions limits required in section X.D. of this PSD Permit.

4. Permittee shall maintain CEMS records that contain the following: the occurrence and duration of any startup, shutdown or malfunction, performance testing, evaluations, calibrations, checks, adjustments, maintenance, duration of any periods during which a continuous monitoring system or monitoring device is inoperative, and emission measurements.

5. Permittee shall maintain records and submit a written report of all excess emissions to EPA semi-annually. The report is due on the 30th day following the end of the calendar quarter and shall include the following:

   a. Time intervals, data and magnitude of the excess emissions, the nature and cause (if known), corrective actions taken and preventive measures adopted;

   b. Applicable time and date of each period during which the CEMS was inoperative (monitor down time), except for zero and span checks, and the nature of system repairs or adjustments; and

   c. A negative declaration when no excess emissions occurred or when the CEMS has not been inoperative, repaired, or adjusted.

6. Excess emissions shall be defined as any operating hour in which the 4-hour rolling average NO_x concentration, or the 3-hour rolling average CO concentration, as measured by the CEMS, exceeds the maximum emission limits set forth in Condition X.D.3.

7. A period of monitor down time shall be any unit operating hour in which sufficient data are not obtained to validate the hour for NO_x, CO or O_2.

8. Excess emissions indicated by the CEM system shall be considered violations of the applicable emission limit for the purpose of this permit.

9. All records required by this PSD Permit shall be retained for five years following the date of such measurements, maintenance, and reports.

H. **New Source Performance Standards**

The proposed power plant is subject to the federal regulations entitled Standards of Performance for New Stationary Sources (40 CFR Part 60). The owner or operator shall meet all applicable requirements of 40 CFR Part 60 Subparts A, Dc, and KKKK.

I. **Fuel Use**

1. Permittee shall use only pipeline quality natural gas to fire EU-1, EU-2, and EU-3.
2. Permittee shall keep a monthly record of the quantity of natural gas used in EU-1, EU-2, and EU-3.
3. Permittee shall sample and record the sulfur content of the natural gas fuel on a monthly basis.
4. The monthly fuel sulfur content reading shall not exceed 0.75 grain per 100 dry standard cubic feet, and the rolling 12-month average fuel sulfur content shall not exceed 0.68 grains per 100 dry standard cubic feet.
5. The fuel sulfur content of the natural gas shall be determined using any of the following test methods: ASTM D1072, D3246, D4468, D5504 or D6667.

XI. Agency Notifications

A. Unless otherwise directed by the EPA or this permit, the owner or operator shall submit a copy of all test plans, reports, certifications, notifications, and other information pertaining to compliance with this permit to:

Director, Air Division (Attn: AIR-5)
U. S. Environmental Protection Agency Region 9
75 Hawthorne Street
San Francisco, CA 94105-3901

Email: R9.AEO@epa.gov
Fax: (415) 947-3579

B. The owner or operator shall submit permit applications, permit amendments, and other applicable permit information, which includes but not limited to installation of control equipment, replacement of an emissions unit, and changes that contravene permit terms, to:

Director, Air Division (Attn: AIR-3)
U. S. Environmental Protection Agency Region 9
75 Hawthorne Street
San Francisco, CA 94105-3901

C. Copies of all correspondence required by this PSD Permit shall be forwarded to:

Air Pollution Control Officer
Colusa County APCD
100 Sunrise Blvd. #F
Colusa, CA 95932-3246

Colusa County APCD
100 Sunrise Blvd. Suite A-3
Colusa, Ca. 95932 : (530) 458-0595

Attachment G

Colusa Generating Station – NSPS Subpart KKKK Requirements

(sections which are not applicable to CGS are not listed)

Section	Requirement
60.4305	CGS Turbines/HRSGs are rated at larger than 10 mmbtu/hr and construction commenced after February 18, 2005. Subpart KKKK applies.
60.4310	No exemptions apply.
60.4315	Pollutants regulated under Subpart KKKK: NOx and SO2.
60.4320	NOx emissions limit: 15 ppmv @15%O2
60.4330	SO2 emissions limit: 0.90 lbs SO2/MWh (gross output), or cannot burn any fuel which contains total potential sulfur emissions in excess of 0.060 lbs SO2/MMBtu (heat input).
60.4333	Operate turbine/HRSG, APC systems, and monitoring equipment to minimize emissions at all times including during startup, shutdown, and malfunction.
60.4340(b)(1)	For units with SCR, install a NOx CEMS per 60.4335(b) or 60.4345. If Part 75 applies, NOx can be monitored per Appendix E of Part 75. (CGS QAP applies here)
60.4345	Meet all CEMS Performance Specs and develop a QA Plan for the CEMS. . (CGS QAP applies here)
60.4350	All CEMS data must be reduced to hourly averages per 60.13(h). . (CGS QAP applies here)
60.4355	If applicable, develop and insure all parametric monitoring and monitoring plans comply with this section. . (CGS QAP applies here)
60.4360	Monitor fuel sulfur content, or invoke exemption per 60.4365.
60.4365	Exemption for fuel sulfur monitoring, if fuel is demonstrated not to exceed potential sulfur emissions of 0.060 lbs SO2/mmbtu, Use PG&E gas quality data to show that exemption applies per 60.4365 (a) or (b).
60.4375	Submit excess emissions reports per 60.7(c). Within 30 days following the end of each 6 month period (see 60.4395).
60.4380(b)	Determine excess emissions and monitor downtime per (b) (1-3)
60.4400	Initial and annual NOX performance tests not required if CEMS used per 60.4340(b)(1)
60.4405	If NOx CEMS used, use 60.4405 (a-d) procedures in lieu of performance test.
60.4415	Perform initial SO2 performance test per 60.4415 (2) or (3). This test must be conducted even if the 60.4365 exemption is invoked.

KKKK Compliance (Colusa Generating Station)

40 CFR Part 60 Subpart KKKK applies to all stationary gas turbines rated at greater than or equal to 10 MMBtu/hr that commence construction, modification, or reconstruction after February 18, 2005. The gas turbines involved in this project have a rating of 1612 MMBtu/hr and were installed after February 18, 2005. Therefore, this subpart applies to these gas turbines. The KKKK compliance summary for the stationary natural gas turbines is summarized below and are based on the following applicable sections of the KKKK performance standards. The non applicable portions of KKKK are not listed in the compliance summary:

Section	Requirement
60.4305	CGS Turbines/HRSGs are rated at larger than 10 mmbtu/hr and construction commenced after February 18, 2005. Subpart KKKK applies.
60.4310	No exemptions apply.
60.4315	Pollutants regulated under Subpart KKKK: NO_x and SO_2.
60.4320	NOx emissions limit: 15 ppmv @15%O_2
60.4330	SO2 emissions limit: 0.90 lbs SO2/MWh (gross output), or cannot burn any fuel which contains total potential sulfur emissions in excess of 0.060 lbs SO2/MMBtu (heat input).
60.4333	Operate turbine/HRSG, APC systems, and monitoring equipment to minimize emissions at all times including during startup, shutdown, and malfunction.
60.4340(b)(1)	For units with SCR, install a NO_x CEMS per 60.4335(b) or 60.4345. If Part 75 applies, NO_x can be monitored per Appendix E of Part 75. (CGS QAP applies here)
60.4345	Meet all CEMS Performance Specs and develop a QA Plan for the CEMS. . (CGS QAP applies here)
60.4350	All CEMS data must be reduced to hourly averages per 60.13(h). . (CGS QAP applies here)
60.4355	If applicable, develop and insure all parametric monitoring and monitoring plans comply with this section. . (CGS QAP applies here)
60.4360	Monitor fuel sulfur content, or invoke exemption per 60.4365.
60.4365	Exemption for fuel sulfur monitoring, if fuel is demonstrated not to exceed potential sulfur emissions of 0.060 lbs SO_2/MMBtu, Use PG&E gas quality data to show that exemption applies per 60.4365 (a) or (b).
60.4375	Submit excess emissions reports per 60.7(c). Within 30 days following the end of each 6 month period (see 60.4395).
60.4380(b)	Determine excess emissions and monitor downtime per (b) (1-3)
60.4400	Initial and annual NO_X performance tests not required if CEMS used

	per 60.4340(b)(1)
60.4405	If NO_x CEMS used, use 60.4405 (a-d) procedures in lieu of performance test.
60.4415	Perform initial SO_2 performance test per 60.4415 (2) or (3). This test must be conducted even if the 60.4365 exemption is invoked.

Compliance with the applicable provisions of NSPS KKKK are summarized below. Specific data to support the compliance determinations listed below are included as attachments.

Section	Compliance
60.4305	KKKK is applicable to the facility. In compliance
60.4310	No exemptions apply.
60.4315	NO_x and SO_2 are in compliance with the KKKK emission standards and monitoring requirements.
60.4320	NO_x emissions limit: 9 ppmv @15%O_2 (See attached GE data sheet). In compliance.
60.4330	SO_2 emissions limit: CT1 172 MW 1.283 lb/hr (SO_2 source test date: x , attached) CT2 172 MW 1.649 lb/hr (SO_2 source test date: x , attached) CT1 - 1.283/172 = 0.0075 lb/MWh CT2 - 1.649/172 = 0.0096 lb/MWh In compliance with SO2 emission limits. The project will only use pipe quality natural gas with sulfur limits less than 0.06 lbs/MMBtu. See attached natural gas fuel analysis. In compliance with limits.
60.4333	The facility will operate turbine/HRSG, APC systems, and monitoring equipment to minimize emissions at all times including during startup, shutdown, and malfunction. In compliance.
60.4340(b)(1)	CT1 and CT2 utilize SCR and NO_x CEMS per 60.4335(b) or 60.4345. In addition, Part 75 applies and NO_x is monitored per Appendix E of Part 75. See attached Quality Assurance Plan (attached). In compliance.
60.4345	In compliance. See attached QAP plan.
60.4350	In compliance. See attached QAP plan.
60.4355	In compliance. See attached QAP plan.
60.4360	In compliance through exemption per 60.4365.
60.4365	Requesting exemption (a) and (b) for sulfur monitoring. The fuel used is pipeline quality natural gas with an average grain loading less than 0.30 gr/100 SCF which converts to 0.0008 lb/mmbtu of SO_2. See attached fuel analysis.

60.4375	No excess emissions during this reporting period. In compliance.
60.4380(b)	No excess emissions or monitor downtime, per (b) (1-3). In compliance.
60.4400	In compliance. NO_x CEMs used per 60.4340(b)(1). Additionally, see attached initial source test for NOx, CO and VOC emission rates (lb/hr and ppmvd @ 15% O_2), NH_3 emission rate, PM10 emission rate. NO_x, CO, VOC, and PM10 will be tested annually.
60.4405	In compliance. See QAP for CEMs certification.
60.4415	In compliance. Initial SO_2 source test results are attached. Also see attached QAP. Future compliance under this requirement may be determined using one of three methods summarized in 60.4415.

Colusa County APCD
100 Sunrise Blvd. Suite A-3
Colusa, Ca. 95932 : (530) 458-0595

Attachment H

COLUSA GENERATING STATION - UNIT 1 & 2
REGPERFECT DATA FLOW CHART

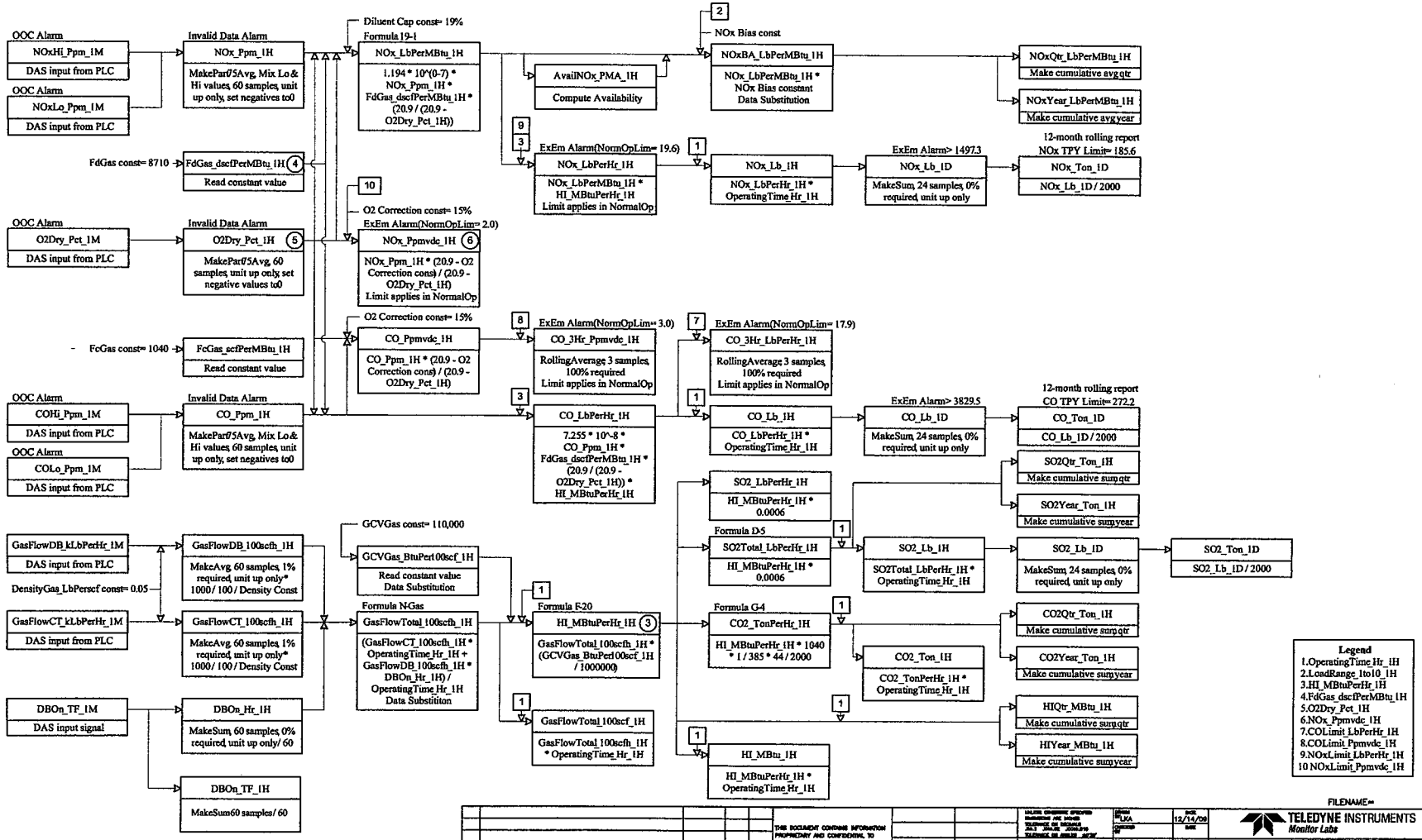

LTR.	DESCRIPTION	DATE	DRAWN	APVD
S0	INITIAL DRAWING	12/14/09	LKA	

REVISIONS

THIS DOCUMENT CONTAINS INFORMATION PROPRIETARY AND CONFIDENTIAL TO MONITOR LABS, INC. AND IS FURNISHED UPON THE EXPRESS CONDITION THAT THE INFORMATION CONTAINED HEREIN WILL NOT BE DUPLICATED, REPRODUCED, DISCLOSED OR DISSEMINATED TO OTHERS OR USED FOR ANY PURPOSE OTHER THAN IN CONNECTION WITH THE EVALUATION THEREOF WITHOUT THE PRIOR WRITTEN CONSENT OF MONITOR LABS, INCORPORATED.

NEXT ASSEMBLY | USED ON

UNLESS OTHERWISE SPECIFIED DIMENSIONS ARE IN INCHES TOLERANCES ON DECIMALS .XX ± .03 .XXX ± .010 .XXXX ± .005 TOLERANCE ON ANGLES ±0°30'

DO NOT SCALE DRAWING

MATERIAL | FINISH

DRAWN LKA 12/14/09 | CHECKED | ENGR APPR | MFG APPR | DATE

TELEDYNE INSTRUMENTS Monitor Labs

COLUSA GENERATING STATION
UNIT 1 & 2
DATA FLOW CHART

SIZE D | CAGE CODE | DWG NO 80286401 | REV S0

SCALE | SHEET 1 OF 3

FILENAME=

COLUSA GENERATING STATION - UNIT 1 & 2
REGPERFECT DATA FLOW CHART

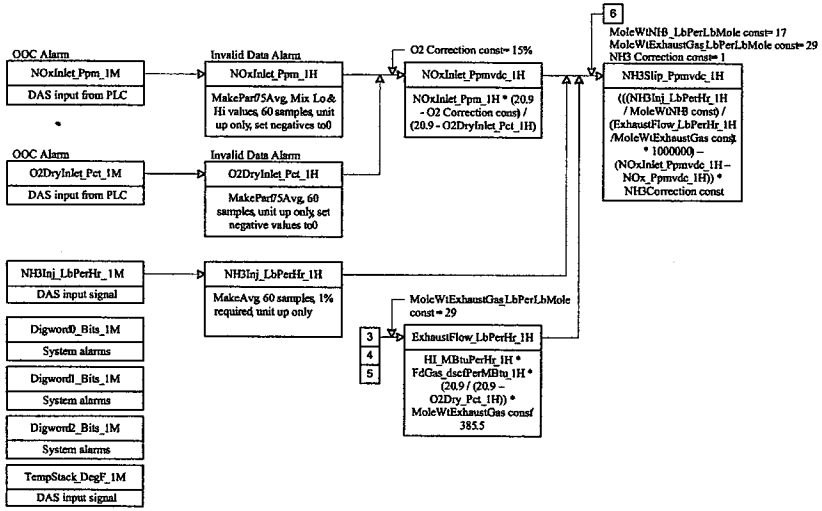

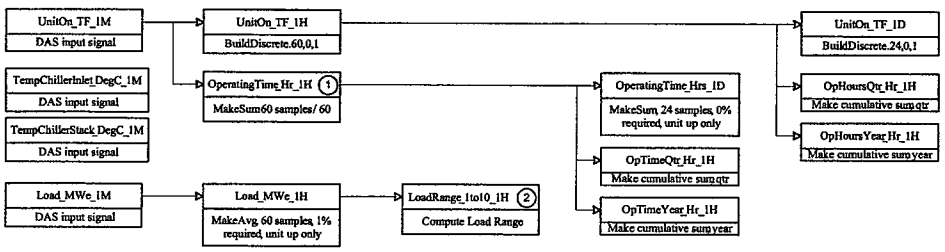

Legend
1. OperatingTime_Hr_1H
2. LoadRange_1to10_1H
3. HI_MBtuPerHr_1H
4. FdGas_dscfPerMBtu_1H
5. O2Dry_Pct_1H
6. NOx_Ppmvdc_1H
7. COLimit_LbPerHr_1H
8. COLimit_Ppmvdc_1H
9. NOxLimit_LbPerHr_1H
10. NOxLimit_Ppmvdc_1H

LTR.	DESCRIPTION	DATE	DRAWN	APVD
S0	INITIAL DRAWING	12/14/09	LKA	

REVISIONS

THIS DOCUMENT CONTAINS INFORMATION PROPRIETARY AND CONFIDENTIAL TO MONITOR LABS, INC. AND IS FURNISHED UPON THE EXPRESS CONDITION THAT THE INFORMATION CONTAINED HEREIN WILL NOT BE DUPLICATED, REPRODUCED, DISCLOSED OR DISSEMINATED TO OTHERS OR USED FOR ANY PURPOSE OTHER THAN IN CONNECTION WITH THE EVALUATION THEREOF WITHOUT THE PRIOR WRITTEN CONSENT OF MONITOR LABS, INCORPORATED.

NEXT ASSEMBLY | USED ON

DO NOT SCALE DRAWING

MATERIAL | FINISH

DRAWN BY LKA 12/14/09

FILENAME=

TELEDYNE INSTRUMENTS Monitor Labs

COLUSA GENERATING STATION
UNIT 1 & 2
DATA FLOW CHART

SIZE D | DWG NO 80286401 | REV S0

SCALE | SHEET 2 OF 3

COLUSA GENERATING STATION - UNIT 1 & 2
REGPERFECT DATA FLOW CHART

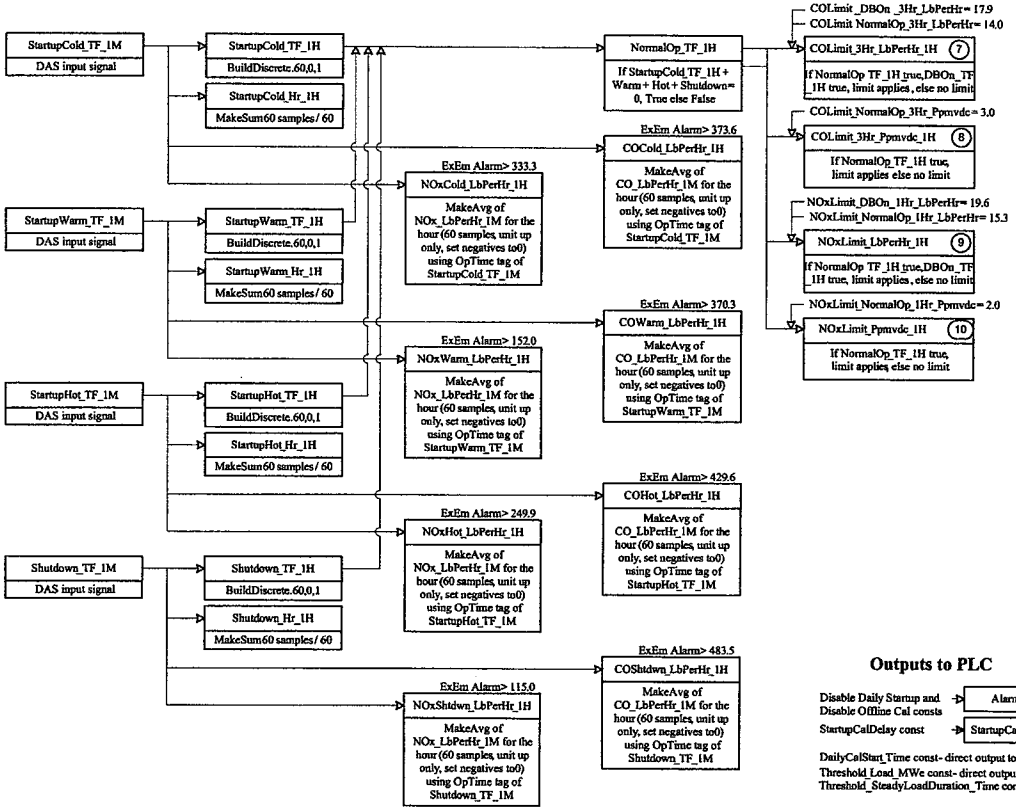

RATA and other Miscellaneous Calculated Minute Tags

GasFlowCT_100scfh_1M
GasFlowCT_kLbPerHr_1M * 1000 / 100 / DensityGas Const

GasFlowDB_100scfh_1M
GasFlowDB_kLbPerHr_1M * 1000 / 100 / DensityGas Const

CO_Ppm_1M
GetGood, Lo or Hi value

NOx_Ppm_1M
GetGood, Lo or Hi value

NOxInlet_Ppmvdc_1M
NOxInlet_Ppm_1M * (20.9 - O2 Correction cons) / (20.9 - O2DryInlet_Pct_1M)

SUSD_Type_1M
If StartupCold_TF_1M > 0, set Status38;
If StartupWarm_TF_1M > 0 set Status39;
If StartupHot_TF_1M > 0 set Status40;
If Shutdown_TF_1M > 0 set Status41

CO_SUSD_LbPerHr_1M
If StartupCold_TF_1M > 0, If StartupWarm_TF_1M > If StartupHot_TF_1M > 0 If Shutdown_TF_1M > 0 Cumulate Emissions For Spotlight Display Only

NOx_SUSD_LbPerHr_1M
If StartupCold_TF_1M > 0, If StartupWarm_TF_1M > If StartupHot_TF_1M > 0 If Shutdown_TF_1M > 0 Cumulate Emissions For Spotlight Display Only

StartupCold_Minutes_1M
Calculate a running sum of consecutive True values of StartupCold_TF_1M

StartupWarm_Minutes_1M
Calculate a running sum of consecutive True values of StartupWarm_TF_1M

StartupHot_Minutes_1M
Calculate a running sum of consecutive True values of StartupHot_TF_1M

Shutdown_Minutes_1M
Calculate a running sum of consecutive True values of Shutdown_TF_1M

GasFlowTotal_100scfh_1M
GasFlowCT_100scfh_1M * UnitOn_TF_1M + GasFlowDB_100scfh_1M * DBOn_TF_1M

HI_MBtuPerHr_1M
GasFlowTotal_100scfh_1M * (GCVGas const / 1000000)

ExhaustFlow_LbPerHr_1M
HI_MBtuPerHr_1M * FdGas const* (20.9 / (20.9 – O2Dry_Pct_1M)) * MoleWtExhaustGas const 385.5

NH3Slip_Ppmvdc_1M
(((NH3Inj_LbPerHr_1M / MoleWtNH3 const) / (ExhaustFlow_LbPerHr_1M/MoleWtExhaustGas const) * 1000000) - (NOxInlet_Ppmvdc_1M - NOx_Ppmvdc_1M)) * NH3Correction const

CO_Ppmvdc_1M
CO_Ppm_1M * (20.9 - O2 Correction cons) / (20.9 - O2Dry_Pct_1M)

CO_LbPerHr_1M
7.255 * 10^-8 * CO_Ppm_1M * FdGas const * (20.9 / (20.9 - O2Dry_Pct_1M)) * HI_MBtuPerHr_1M; Combine status from SUSD_Type_1M tag

NOx_LbPerMBtu_1M
1.194 * 10^(-7) * NOx_Ppm_1M * FdGas const * (20.9 / (20.9 - O2Dry_Pct_1M))

NOx_Ppmvdc_1M
NOx_Ppm_1M * (20.9 - O2 Correction cons) / (20.9 - O2Dry_Pct_1M)

NOx_LbPerHr_1M
NOx_LbPerMBtu_1M * HI_MBtuPerHr_1M; Combine status from SUSD_Type_1M tag

SO2_LbPerHr_1M
HI_MBtuPerHr_1M * 0.0006

PM10_LbPerHr_1M
HI_MBtuPerHr_1M * PM10 Emission Rate const

VOC_LbPerHr_1M
HI_MBtuPerHr_1M * VOC Emission Rate const

Outputs to PLC

Disable Daily Startup and Disable Offline Cal consts → AlarmOOC_Bits_1M

StartupCalDelay const → StartupCalDelay_Minutes_1M

DailyCalStart_Time const - direct output to PLC
Threshold_Load_MWe const - direct output to PLC
Threshold_SteadyLoadDuration_Time const - direct output to PLC

Legend
1.OperatingTime_Hr_1H
2.LoadRange_1to10_1H
3.HI_MBtuPerHr_1H
4.FdGas_dscfPerMBtu_1H
5.O2Dry_Pct_1H
6.NOx_Ppmvdc_1H
7.COLimit_LbPerHr_1H
8.COLimit_Ppmvdc_1H
9.NOxLimit_LbPerHr_1H
10 NOxLimit_Ppmvdc_1H

LTR.	DESCRIPTION	DATE	DRAWN	APVD
S0	INITIAL DRAWING	12/14/09	LKA	

REVISIONS

THIS DOCUMENT CONTAINS INFORMATION PROPRIETARY AND CONFIDENTIAL TO MONITOR LABS, INC. AND IS FURNISHED UPON THE EXPRESS CONDITION THAT THE INFORMATION CONTAINED HEREIN WILL NOT BE DUPLICATED, REPRODUCED, DISCLOSED OR DISSEMINATED TO OTHERS OR USED FOR ANY PURPOSE OTHER THAN IN CONNECTION WITH THE EVALUATION THEREOF WITHOUT THE PRIOR WRITTEN CONSENT OF MONITOR LABS, INCORPORATED.

UNLESS OTHERWISE SPECIFIED DIMENSIONS ARE INCHES TOLERANCE ON DECIMALS .XX ± .XXX ± .XXXX ± ANGLES ± TOLERANCE ON BEND ±0°30'

DO NOT SCALE DRAWING

MATERIAL

FINISH

NEXT ASSEMBLY | USED ON

DRAWN LKA 12/14/09

FILENAME=

TELEDYNE INSTRUMENTS Monitor Labs

COLUSA GENERATING STATION
UNIT 1 & 2
DATA FLOW CHART

SIZE D | DWG NO 80286401 | REV S0

SHEET 3 OF 3

Colusa County APCD
100 Sunrise Blvd. Suite A-3
Colusa, Ca. 95932 : (530) 458-0595

Attachment I

COLUSA COUNTY
DEPARTMENT OF AGRICULTURE - AIR POLLUTION CONTROL DISTRICT
HARRY A. KRUG
AGRICULTURAL COMMISSIONER & SEALER OF WEIGHTS & MEASURES - (530) 458-0580
DIRECTOR OF AIR QUALITY STANDARDS - (530) 458-0590
100 SUNRISE BLVD., SUITE F, COLUSA, CALIFORNIA 95932

ACID RAIN PERMIT

COLUSA COUNTY AIR POLLUTION CONTROL DISTRICT
100 SUNRISE BOULEVARD, SUITE A-3
COLUSA, CALIFORNIA 95932-3246

Permit Number: 2009-11-ARP-IV-1
Term: Five years, or until the issuance of a Title V Permit incorporating the requirements of the Acid Rain Permit

Facility Name: Colusa Generating Station **ORIS Code:** 56532
Facility Location: 4780 Dirks Road, Maxwell, Colusa County, California
Company Name: Pacific Gas and Electric Company
Contact: Randal Livingston - email RSL3@pge.com
Mailing Address: Mail Code N11E, 245 Market Street, San Francisco, CA 94105-1814

This Permit is issued pursuant to **Colusa County APCD Rule 3.0** and **Title IV of the Clean Air Act** subject to the permit application attached by reference. The owner and operator of the source shall comply with the standard requirements and special provisions set forth in the permit application under 40 CFR 72.31. This permit is deemed to incorporate the definitions of terms under 40 CFR 72.2. Per 40 CFR 72.51, each affected unit operated in accordance with this permit shall be deemed to be operating in compliance with the Acid Rain Program, except as provided in 40 CFR 72.9(g).

UNIT	Unit Will Hold Allowances in Accordance with 40 CFR 72.9(c)(1)	Commence Operation Date	CEMS Certification Application Submittal Date
CTG-1	Yes	5/1/2010	10/28/2010
CTG-2	Yes	5/1/2010	10/28/2010

Harry Krug
Director of Air Quality Standards
Colusa County Air Pollution Control District

3/1/10
Date

Colusa County Sun-Herald

433 Market Street
P.O. Box 89
Colusa, CA 95932

Proof of Publication

STATE OF CALIFORNIA,

County of Colusa

Colusa County Air Pollution Control District

I, **Kelli Smith** am a resident of **Sutter County**, over the age of eighteen years and not a party to or interested in the matter noticed.

I am the principal clerk of the printer of the **Colusa Sun-Herald**, which newspaper was adjudged by the Superior Court of the State of California in and for the County of Colusa a newspaper of general circulation in the City of Colusa, County of Colusa, State of California, under date of June 9, 1952, Case Number 10316

The Notice, of which the annexed is a printed copy, appeared in said newspaper on the following dates:

January 16, 2010

I declare under penalty of perjury under the laws of the State of California that the foregoing is true and correct.

Date: **January 20, 2010**

Kelli Smith

(Signature)

COLUSA COUNTY
AIR POLLUTION CONTROL DISTRICT
NOTICE OF 30 DAY PUBLIC COMMENT PERIOD
COLUSA GENERATING STATION
PACIFIC GAS & ELECTRIC
CONDITIONAL APPROVAL OF TITLE IV PERMIT

Notice is hereby given that the Colusa County Air Pollution Control District will open a public comment period in regards to the Conditional approval of the Title IV permit for the Colusa Generating Station, submitted by Pacific Gas and Electric. Pacific Gas and Electric is in the process of building a 660 net megawatt combined cycle power generation unit located near the west end of Delevan Rd., northwest of Maxwell.

The public comment period will end at 5:00 pm on February 15, 2010. A copy of the Colusa Generating Station's preliminary analysis and any additional information pertinent to the approval can be obtained at the following location.

Colusa County Air Pollution Control District
100 Sunrise Blvd. Suite F
Colusa, California 95932
(530)458-0590

All comments are due in writing to the above location prior to 5:00 PM on February 15, 2010.

CS - January 16, 2010 Ad #00090598

Colusa County APCD
100 Sunrise Blvd. Suite A-3
Colusa, Ca. 95932 : (530) 458-0595

Attachment J

COLUSA COUNTY AIR POLLUTION CONTROL DISTRICT

100 Sunrise Blvd. Suite F Colusa, California 95932
Tel (530) 458-0590 Fax (530) 458-5000

PERMIT-TO-OPERATE

Permit number 21006-259

Issuance date 4/1/2011

Source type 660 MW Power Plane

PACIFIC GAS AND ELECTRIC CO. - COLUSA GENERATING STATION

PO Box 398 Maxwell CA 95955

4780 Dirks Rd

Fee information

Total fees	Type of fees	Fees received
$4,823.00	Annual Permit	

Inventory year 2010

Operating schedule 24/7/52

Emissions in tons per year

Total particulate	PM10	NOX	Total hydrocarbons	RHC	SOX	CO
4.6	5.65	43.3	0.24	0.24	2.21	81.55

Emissions of toxic air contaminants	Compliance information and date
2.42	

This permit to operate is issued pursuant to the California Health and Safety Code and local District regulations and shall remain in effect for a period of one year from the date of issuance.

Permit issued by: Joseph Damiano
Joseph Damiano
Director of Air Quality Standards

COLUSA COUNTY
AIR POLLUTION CONTROL DISTRICT
JOSEPH J. DAMIANO
DIRECTOR OF AIR QUALITY STANDARDS
100 SUNRISE BLVD., SUITE F, COLUSA, CALIFORNIA 95932
(530) 458-0590

PACIFIC GAS AND ELECTRIC

COLUSA GENERATING STATION

PERMIT TO OPERATE CONDITIONS – 8/8/2011

1) All facility operating staff shall be advised of and familiar with these permit conditions.

2) The "Right of Entry", as provided by the California Health and Safety Code Section 41510 of Division 26, shall apply at all times.

3) In the case of shut-down or re-start of air pollution control equipment for necessary scheduled maintenance, the intent to shut down such equipment shall be reported to the Colusa County Air Pollution Control District (District) Air Pollution Control Officer (APCO) at least twenty-four (24) hours prior to the planned shutdown. Such notification does not exempt the facility from complying with all permit limits and requirements.

4) If any upset or breakdown occurs with equipment under permit in such a manner that may cause excess emissions of air contaminants, the APCO shall be notified of such failure or breakdown within twenty-four (24) hours or by 9:00 a.m. by the following working day. The person responsible shall also submit a written statement of full disclosure of the upset/breakdown to the District within 72 hours. The report shall contain the date, time, duration, estimated emissions, cause, and remedy.

5) Fugitive emissions, including dust and odors shall be controlled at all times such that a nuisance is not created at any point beyond the facility's property lines.

6) The following equipment are permitted at the 664 MW electrical generating facility. The number, capacity and emission control systems are permit limits and requirements.

Equipment	Quantity	Make/Model	Size/Capacity	Controls
Combustion Turbine Generator (CTG)	2	General Electric 7-FA	1,790 MMbtu/hr HHV 172 MW	SCR w/ammonia Oxidation catalyst
Steam Turbine Generator	1	Condensing reheat	320 MW	
Heat Recovery Steam Generator (HRSG)	2	Nooter Eriksen w/duct burners	644 MMbtu/hr HHV	SCR w/ammonia Oxidation catalyst
Natural Gas Fuel Heater	1	Water and glycol bath	10 MMbtu/hr	Low NOx burner
Aqueous Ammonia Storage Tank	1	Used for NOx control	20,000 US gal	

7) Annual source tests are required. A source test protocol shall be submitted to the District, for approval by the Air Pollution Control Officer (APCO), at least 45 days prior to conducting the source tests. The District shall be notified at least 10 days prior to actual source testing. Both printed and electronic copies of the source tests must be provided to the District

8) Stack gas testing, using EPA, ARB or other APCO approved methods, shall be required on an annual basis for NOx, VOC and CO on the HRSG stacks. The HRSG stacks shall also be tested for SOx and PM_{10} emissions during the first year and if requested by the APCO in subsequent years. The natural gas water bath heater shall be tested for NOx, SOx, VOC, CO, and PM_{10} during the first year and thereafter only as requested by the APCO.

9) Annual testing of the HRSG stacks shall include quantification of formaldehyde and ammonia (NH_3) emissions for compliance with permit limits. The facility owner/operator shall verify, by continuous recording, the ammonia injection rate to the system. The ammonia source test shall be conducted over the expected operating range of the turbine (including, but not limited to 50%, 75%, and 100% load) to establish the range of ammonia injection rates necessary to achieve NOx emission reductions while maintaining ammonia slip levels. The source test shall also determine the correlation between the heat input rates of each gas turbine and ammonia mass emissions.

10) The CTGs, duct burners, and natural gas water bath heater shall be fired exclusively on pipeline quality natural gas. The annual average sulfur content in the natural gas used at the facility shall be less than or equal to 0.3 grains per 100 scf. Monthly testing, at the site, using approved methods (i.e., EPA 19 and ASTM D-3246) is required to determine the sulfur content of the natural gas. The test results shall be provided to the District each quarter.

11) Permit limits on elapsed time for CTG startups and shutdown and associated emissions are presented below. Only one gas turbine may be started at a time.

Time and Emissions for One Gas Turbine During Startup and Shutdown Operations								
	Cold Startup		**Warm Startup**		**Hot Startup**		**Shutdown**	
	270 Minutes		**180 Minutes**		**90 Minutes**		**30 Minutes**	
Pollutant	**Max lb/hour**	**Total lb/270 min**	**Max lb/hour**	**Total lb/180 min**	**Max lb/hour**	**Total lb/90 min**	**Max lb/hour**	**Total lb/30 min**
NO_X	333.3	779.1	249.9	456.2	152.0	259.9	115.0	115.0
CO	429.6	1,355.6	373.6	790.5	370.3	679.6	483.5	483.5
VOC	27.7	106.7	27.7	47.4	27.7	38.0	23.9	23.9
SO_2	0.4	1.01	0.4	0.58	0.4	0.33	0.2	0.2
PM_{10}	12.0	48.8	12.0	30.8	12.0	12.8	6.0	6.0

12) Each CTG shall meet the following maximum steady state (non startup or shutdown conditions) emission limits (concentrations are ppmvd @ 15% O_2):

Pollutant	Emission	Average	W/ Duct Firing	W/O Duct Firing
NOx	Pounds	Hour	20.7	15.3

	Pounds	Day	1,497.3	1,497.3
	Concentration	Hour	2.0	2.0
VOC	Pounds	Hour	7.2	3.4
	Pounds	Day	315.3	315.3
	Concentration	Hour	2.0	1.38
CO	Pounds	Hour	18.9	14.0
	Pounds	Day	3,829.5	3,829.5
	Concentration	3Hour	3.0	3.0
PM10	Pounds	Day	324	324
NH3	Pounds	Hour	19.2	14.2
	Concentration	Hour	5.0	5.0

Toxic Air Contaminant	Emission Limit per MMscf Natural Gas
Formaldehyde	0.917 pounds

Total facility emissions of toxic air contaminants shall not exceed 10 tons per year for any single pollutant except ammonia, formaldehyde and propylene.

13) The natural gas water bath heater shall meet the emission limits stated below.

Pollutant	Pounds per Hour	Concentration ppmvd @ 3% O_2
NO_X	0.39	30.0
CO	0.79	
VOC	0.03	
PM_{10}	0.03	
SO_2	0.03	

14) Total emissions from the Colusa Generating Station (CGS) shall not exceed the limits established below.

Quarterly and Annual Combustion Emissions from CGS Facility					
Pollutant	1st Quarter Emissions (tons)	2nd Quarter Emissions (tons)	3rd Quarter Emissions (tons)	4th Quarter Emissions (tons)	Annual Emissions (tons)
NO_x	45.56	43.58	51.30	44.27	184.7
CO	54.29	52.49	107.15	53.95	267.9
VOCs	12.30	11.63	11.84	11.76	47.5
PM_{10}	25.54	25.78	26.02	26.02	103.4
SO_2	4.07	3.85	3.89	3.89	15.7

15) Continuous emission monitoring (CEM) systems shall sample, analyze, and record NO_X, CO and O_2 concentrations in the exhaust gas of both HRSG stacks. This system will generate reports of emissions data in accordance with the permit requirements and will send alarm signals to the plant distributed control system (DCS) control room when the

level of emissions approaches or exceeds pre-selected limits. Relative accuracy test audits shall be conducted annually to verify performance of the CEM system.

16) The Colusa County Air District shall have realtime access to the CEM data at the facility to enable District staff to monitor emissions and compliance with these permit conditions as recorded by the CEMs. The format and content of the data display shall be approved by the District.

17) Quarterly reports of the facility CEM and process data (including fuel use for each combustion equipment unit), including startup information, shall be submitted to the District within 30 days after the end of each quarter. Format of the data submission will be determined by the District and includes both electronic and hard copy files.

18) An annual report shall also be submitted for the CGS facility including: total emissions for all pollutants for each combustion unit and the entire facility, total operating hours for each combustion unit, numbers and types of startups and shutdowns for each CTG, total fuel used for each combustion unit, results of the monthly sulfur content tests, and total ammonia used. Format of the data submission will be determined by the District and includes both electronic and hard copy files.

19) Offsets for the Colusa Generating Station shall be in effect prior to operation of the facility and will not be less than the following amounts at any time. The offsets presented in the first table below reflect distance factor adjustments, the 1.4 to 1 VOC:NOx interpollutant ratio and the 25 tons per year emission allowance.

Emission Offsets by Calendar Quarter (adjusted for distance and interpollutant ratio)					
Pollutant in tons	Quarter 1	Quarter 2	Quarter 3	**Quarter 4**	**Annual Tons**
Oxides of nitrogen (NO_2)	26.20	24.99	21.52	27.12	99.83
Volatile organic compounds	26.59	26.59	26.59	26.59	106.36
Particulate Matter PM_{10}	21.22	19.73	15.21	22.20	78.36

Emission Offsets by Calendar Quarter (not adjusted)					
Pollutant in tons	Quarter 1	Quarter 2	Quarter 3	**Quarter 4**	**Annual Tons**
Oxides of nitrogen (NO_2)	36.79	35.41	31.36	37.93	141.49
Volatile organic compounds	39.89	39.89	39.89	39.89	159.56
Particulate Matter PM_{10}	30.43	28.33	22.15	31.75	112.66

Colusa County APCD
100 Sunrise Blvd. Suite A-3
Colusa, Ca. 95932 : (530) 458-0595

Attachment K

TOXICS AND GHG TRACKING AND COMPLIANCE PLAN
PG&E Colusa Generating Station
Operations Emissions and Commissioning Emissions for 2010

Reporting Date: Aug-11

Reporting/Tracking Year: 2010

Combustion Turbines/HRSGs

	CAS #	Emissions Factors lb/mmbtu	Emissions Factors lb/mmscf	EF Source	Source Test Results lb/hr	Max Hourly Emissions lbs	Annual Emissions lbs	Annual Emissions tons
Ammonia Unit #1	7664417	0.00E+00	0.00E+00	Test 11/10	0.55	0.55	480.53	0.240
Formaldehyde Unit #1	50000	7.00E-05	9.19E-02	Test	0.205	0.205	179.11	0.090
Ammonia Unit #2	7664417	0.00E+00	0.00E+00	Test 11/10	1.212	1.212	901.58	0.451
Formaldehyde Unit #2	50000	7.00E-05	9.19E-02	Test	0.205	0.205	152.50	0.076
1-3 Butadiene	106990	1.24E-07	1.27E-04	CATEF	0	0.001	0.27	0.000
Acetaldehyde	75070	1.34E-04	1.37E-01	CATEF	0	0.656	287.12	0.144
Acrolein	107028	1.85E-05	1.89E-02	CATEF	0	0.091	39.61	0.020
Benzene	71432	1.30E-05	1.33E-02	CATEF	0	0.064	27.87	0.014
Ethylbenzene	100414	1.75E-05	1.79E-02	CATEF	0	0.086	37.51	0.019
Hexane	110543	2.53E-04	2.59E-01	CATEF	0	1.240	542.79	0.271
Propylene	115071	7.53E-04	7.71E-01	CATEF	0	3.692	1615.81	0.808
Propylene Oxide	75569	4.67E-05	4.78E-02	CATEF	0	0.229	100.18	0.050
Toluene	108883	6.93E-05	7.10E-02	CATEF	0	0.340	148.80	0.074
Xylenes	1330207	2.55E-05	2.61E-02	CATEF	0	0.125	54.70	0.027
Naphthalene	91203	1.62E-06	1.66E-03	CATEF	0	0.008	3.48	0.002
Total PAH w/o Naph	1151	1.30E-07	1.31E-04	CATEF	0	0.001	0.27	0.000

GHG	kg/mmbtu	Frac Ox.	lbs/mmbtu	lb/mmscf				
CO2	53.06	1	1.17E+02	1.20E+05	CCAR	0	573603.7	2.510E+08	1.255E+05
CH4	0.003901	na	8.60E-03	8.81E+00	CCAR	0	42.172	1.846E+04	9.228
N2O	0.001361	na	3.00E-03	3.07E+00	CCAR	0	14.713	6.439E+03	3.220
CO2e	126708.8	tons/yr		*CO2e*	*114928.6*	*metric tons/yr*			

Total Turbines/HRSGs

Fuel Use Rate Data			
NG HHV	1024	btu/scf	
Fuel Meter Data			
Max Hourly Fuel Use	4.7887	mmscf	(for both units)
Annual Fuel Use	2095.73	mmscf	(for both units)
Calculated Heat Rate Data			
Max Hourly Heat Rate	4903.60	mmbtu	(for both units)
Annual Heat Rate	2146027.5	mmbtu	(for both units)
DAHS/Op Log Data			
Unit #1 Annual Ops Hrs	873.69	Hrs/Yr	
Unit #2 Annual Ops Hrs	743.88	Hrs/Yr	
Total Hrs, All Units	1617.57	Hrs/Yr	(for both units)

Fuel Gas Heater (10 mmbtu/hr)

	CAS #	Emissions Factors lb/mmbtu	Emissions Factors lb/mmscf	EF Source	Source Test Results lb/hr	Max Hourly Emissions lbs	Annual Emissions lbs	Annual Emissions tons
Acetaldehyde	75070	8.66E-06	8.87E-03	CATEF	0	0.0001	0.088	0.0000
Benzene	71432	4.21E-06	4.31E-03	CATEF	0	0.0000	0.043	0.0000
Formaldehyde	50000	2.16E-04	2.21E-01	CATEF	0	0.0022	2.193	0.0011

GHG	kg/mmbtu	Frac Ox.	lbs/mmbtu	lb/mmscf				
CO2	53.06	1	1.17E+02	1.20E+05	CCAR	0	1170.3	1.189E+06	594.411
CH4	0.001014	na	2.24E-03	2.29E+00	CCAR	0	0.022	22.719	0.011
N2O	0.000282	na	6.22E-04	6.37E-01	CCAR	0	0.006	6.318	0.003
CO2e	595.6	tons/yr		*CO2e*	*540.3*	*metric tons/yr*			

Total FG Heater

Fuel Use Rate Data		
NG HHV	1024	btu/scf
Fuel Use Data		
Max Hourly Fuel Use	0.00977	mmscf
Annual Fuel Use	9.92	mmscf
Calculated Heat Rate Data		
Max Hourly Heat Rate	10.00	mmbtu
Annual Heat Rate	10162.95	mmbtu
DAHS/Op Log Data		
Total Annual Ops Hrs	1015.84	Hrs/Yr

GHG-SF6 Emissions

	Elec Equip Capacity, lbs	Annual Leak Rate, %	GWP Factor	Emissions lbs/Yr	Emissions tons/Yr
SF6 Data	200	0	23900	0	0.0000

CO2e	0.0	tons/yr	*CO2e*	*0.0*	*metric tons/yr*

Note: no SF6 charging required in 2010
Leak Rate Reference: "SF6 Leak Rates from High Voltage Circuit Breakers-USEPA Investigates Potential GHG Emissions Source", J.Blackman, et.al., ICF Consulting and USEPA.

GHG-Refrigerant Data

Type ID	System Capacity, lbs	Annual Leak Rate, %	GWP Factor	Emissions lbs/Yr	Emissions tons/Yr	CO2e tons/Yr	*CO2e metric tons/yr*
None	0	0	0	0	0.00000	0.0	0.0
*							
*							
*							

Note: no refrigerant charging required in 2010.

Total CO2e 0.0

Leak Rate Reference(s):

Total CO2e, metric tons/yr: 115468.9

Wet Surface Air Cooler (WSAC)

Ops Hrs/Day:	24	
Ops Hrs/Yr:	1015.84	
PM10 EF:	0.24	lbs/hr (PG&E letter dated 11-18-10, CGS08-L-0006)

Emissions:	lbs/day	5.76
	lbs/yr	243.80
	tons/yr	0.12

Note: no toxics or GHGs are emitted from the WSAC

Colusa County APCD
100 Sunrise Blvd. Suite A-3
Colusa, Ca. 95932 : (530) 458-0595

Attachment L

8.1 AIR QUALITY

This analysis of the potential air quality impacts of the Colusa Generating Station (CGS) project was conducted according to CEC power plant siting requirements. It also addresses U.S. Environmental Protection Agency (U.S. EPA) Prevention of Significant Deterioration (PSD) requirements and Colusa County Air Pollution Control District (CCAPCD) permitting requirements for Determination of Compliance/Authority to Construct (DOC/ATC). The analysis is reported as follows:

- Section 8.1.1 describes the local environment surrounding the CGS. Meteorological data, including wind speed and direction (i.e., windroses), temperature, relative humidity, and precipitation are discussed, and ambient concentrations for the appropriate criteria pollutants are summarized.

- Section 8.1.2 evaluates the project's air quality impacts from emissions of nitrogen oxides (NO_X), carbon monoxide (CO), sulfur dioxide (SO_2), precursor organic compound (POC), particulate matter less than 10 micrometers in diameter (PM_{10}), and particulate matter less than 2.5 micrometers in diameter ($PM_{2.5}$). Emission estimates are presented for these pollutants for project construction and operation over a range of operating modes, including startup and shutdown. The modeling analysis conducted for nitrogen dioxide (NO_2), CO, SO_2, and PM_{10} is presented; the results show no exceedances of the California and federal Ambient Air Quality Standards (AAQS) or to any applicable PSD increments from the proposed project. Also, air quality–related values (AQRVs) are evaluated; no negative impact to visibility, terrestrial, or aquatic resources is predicted.

- Section 8.1.3 presents the results of cumulative impacts analysis (including off-project sources that have been permitted but historically have operated at less than their full potential to emit air pollutants, or are in the process of being permitted, and are not yet operational).

- Section 8.1.4 describes the proposed project's emission offsets.

- Section 8.1.5 describes all applicable laws, ordinances, regulations, and standards. Section 8.1.5 also provides an analysis of best available control technology (BACT) for gas-fired turbines, and explains how the use of Dry Low NO_X combustors and selective catalytic reduction (SCR) with ammonia injection will meet NO_X BACT requirements, and how the use of an oxidation catalyst meets the CO BACT requirements. Mitigation of fugitive dust during construction is also discussed.

- Section 8.1.6 lists the agency contacts used to conduct the air quality assessment.

- Section 8.1.7 lists the permits required and provides a permit schedule.

- Section 8.1.8 lists the references used to conduct the air quality assessment.

Some air quality data are presented in other sections of this AFC, including an evaluation of toxic air pollutants (see Section 8.6, Public Health) and information related to the fuel characteristics, heat rate, and expected capacity factor of the proposed facility (see Chapter 3, Facility Description and Location).

8.1.1 Affected Environment

This section describes the regional climate and meteorological conditions that influence transport and dispersion of air pollutants and the existing air quality within the project region. The data presented in this section are representative of the CGS site.

CGS is proposed to be located about 4 miles west of I-5 in Colusa County, California on a 100-acre site, as shown on Figures 8.1-1A and 8.1-1B. The power plant and switchyard will occupy approximately 27.2 acres within the 100-acre project site. The site is currently undeveloped agricultural land used for grazing cattle. The site topography is rolling hills from 170 to 190 feet above mean sea level. Figures 8.1-1A and 8.1-1B also show the topography within a 10-mile radius of the CGS site. The Cortina Rancheria of Wintun Indians of California is located about 25 miles south of the site. This is well beyond the range of any significant air quality impacts from the proposed project.

8.1.1.1 Climatology

Colusa County is part of the Sacramento Valley Air Basin, which is surrounded by the Coastal Mountain Range to the west, the Sierra Nevada to the east, the Cascade Range to the north, and the San Joaquin Valley Air Basin to the south. The Sacramento Valley has a moderate Mediterranean climate, which is characterized by hot, dry summers and cool, rainy winters. The annual average rainfall is approximately 16 inches. The majority of rain falls between October and April. During the winter, the North Pacific storm track intermittently dominates the valley weather, with periods of dense and persistent low-level fog often occurring between storms. The frequency and persistence of the heavy fog in the valley diminishes with the approach of spring, when the days lengthen and the intensity of the sun increases.

During the summer, the Pacific storm track is usually north of the Sacramento Valley, the afternoon temperatures are warm to hot, while nights are usually mild due to cool marine air intrusion from the San Francisco Bay Area. Long-term average temperature and precipitation data have been collected at the Colusa 2 SSW Station, the surface meteorological station nearest to the project site, and are presented in Table 8.1-1. The data indicate that July is usually the warmest month of the year, with a normal daily maximum temperature of 95°F, and a normal daily minimum of 77.1°F. In the fall and spring, the afternoon temperatures are mild, in the 60s and 70s, while nights are cooler, in the 40s and 50s. In the winter, temperatures are cool in the afternoon and crisp at night. The coldest month is usually January, with a normal daily maximum of 54°F and a normal daily minimum of 37°F.

The annual and seasonal wind roses are presented in Figures A-1 through A-5 of the Colusa Modeling Protocol, which is included in Appendix G. The windroses show that on an annual basis the predominant winds for the project site are from the southeast and east-southeast directions. The spring and fall quarters follow the annual pattern. The winter quarter is dominated by north winds, while the summer quarter sees large southeast and east-southeast components.

Atmospheric stability and mixing heights are important parameters in the determination of pollutant dispersion. Atmospheric stability reflects the amount of atmospheric turbulence and mixing. In general, the less stable an atmosphere, the greater the turbulence, resulting in more mixing and better dispersion. The mixing height, measured from the ground upward, is the height of the atmospheric layer in which convection and mechanical turbulence promote mixing. Good ventilation results from a high mixing height and at least moderate wind speeds within the mixing layer. Although marine air generally flows into the basin from the San Joaquin River Delta, the region's topographic features restrict air movement through and out of the basin. The Coastal Range hinders wind access into the air basin from the west, and the high Sierra Nevada range is a significant barrier to the east. These topographic features result in weak air flow that becomes blocked vertically by high barometric pressure.

8.1.1.2 Existing Air Quality

Ambient air quality standards have been set by both the federal government and the State of California to protect public health and welfare with an adequate margin of safety. Pollutants for which National Ambient Air Quality Standards (NAAQS) or California Ambient Air Quality Standards (CAAQS) have been set are often referred to as "criteria" air pollutants. The term is derived from the comprehensive health and damage effects review that culminates in pollutant-specific air quality criteria documents,

which precede NAAQS and CAAQS standard setting. These standards are reviewed on a legally prescribed frequency and revised as new health and welfare effects data warrant.

Each NAAQS or CAAQS is based on a specific averaging time over which the concentration is measured. Different averaging times are based upon protection of short-term, high-dosage effects or longer-term, low dosage effects. NAAQS may be exceeded no more than once per year. CAAQS are not to be exceeded.

A protocol was submitted to air regulatory agencies with jurisdiction over this project that included the list of locations of available California Air Resources Board (CARB) ambient air quality monitoring stations (URS, 2006). The ambient air quality in Colusa County is represented by data monitored at three permanent air monitoring stations. The monitoring station within the county closest to the proposed project site is the Colusa-Sunrise Boulevard Station, within 20 miles from the project site. However, this station only measures ozone, PM_{10} and $PM_{2.5}$ and does not measure all criteria pollutant concentrations, and data from other stations are necessary. Monitoring stations at Yuba City–Almond Street Station (in Sutter County, 38 miles), and Sacramento–Del Paso Manor (in Sacramento County, 60 to 70 miles) are also located near the project site. Gaseous pollutants monitored at these two stations include ozone, CO, NO_2, SO_2, PM_{10}, and $PM_{2.5}$. Air quality measurements taken at these stations are presented in Tables 8.1-2 through 8.1-7. For the air quality impact analysis, the maximum background concentration from the past 3 years from all monitoring stations was used.

The monitoring data indicate that the air is in compliance with all federal NAAQS and California AAQS for NO_2, CO, and SO_2 for all averaging periods.

Table 8.1-2 shows that the federal 8-hour ozone AAQS of 0.08 parts per million (ppm) has not been exceeded in the past 4 years at the Colusa Station and that the federal 1-hour ozone AAQS of 0.12 ppm (a standard revoked by the U.S. EPA on June 15, 2005) has not been exceeded in the last 10 years at the Colusa Station. The more stringent 1-hour California AAQS of 0.09 ppm has not been exceeded in the past 4 years at the Colusa Station. The federal standard requires maintaining 0.08 ppm as a 3-year average of the fourth-highest daily maximum value. Therefore, the number of days that the maximum concentration exceeds the standard concentration is not the number of violations of the standard for the year.

The PM_{10} data in Table 8.1-3 show that the 24-hour average California AAQS of 50 micrograms per cubic meter ($\mu g/m^3$) is frequently exceeded in the Colusa area. The federal 24-hour average PM_{10} AAQS of 150 $\mu g/m^3$ was exceeded in 1999. The single 1999 occurrence is the only time within the past 10 years that the federal 24-hour PM_{10} AAQS has been exceeded. The maximum 24-hour PM_{10} background concentration of 171 $\mu g/m^3$ was measured at the Colusa-Sunrise Air Monitoring Station on October 15, 1999. On this day, unusually strong north winds combined with inversion capping of the valley, which resulted in a severe dust storm. The second highest 24-hour PM_{10} concentration measured at the Colusa-Sunrise Monitoring Station in 1999 is 89 $\mu g/m^3$; this occurred the week following a dust storm (on October 21).

The annual PM_{10} data are also presented in Table 8.1-3. The annual geometric mean is also called the state annual average and is a geometric mean of all measurements. The annual arithmetic mean is also called the national annual average and is an arithmetic average of the four arithmetic quarterly averages (the federal PM_{10} standard was revoked on September 22, 2006). Most of the annual geometric concentrations are above the California PM_{10} ambient air quality standard of 20 $\mu g/m^3$.

The annual and 24-hour $PM_{2.5}$ data are presented in Table 8.1-4. $PM_{2.5}$ data have a relatively short collection history. The 3-Year Average, 98th Percentile is below the federal AAQS of 35 $\mu g/m^3$. The 3-Year Average, Arithmetic Mean is below the California AAQS of 12 $\mu g/m^3$.

The data in Table 8.1-5, Table 8.1-6, and Table 8.1-7 show that the measured concentrations of CO, NO_2, and SO_2, respectively, are all below the applicable federal and California standards.

8.1.2 Environmental Consequences

This section describes the analyses conducted to assess the potential air quality impacts from the proposed project. Impacts from the proposed project are considered significant if, when combined with background ambient levels, they would exceed an ambient air quality standard, or if by themselves, they would exceed an applicable PSD significant impact amount. These amounts are discussed later in Section 8.1.5. Emissions estimates for both construction and operation of the proposed project are presented. Dispersion model selection and setup are also described (i.e., emissions scenarios and release parameters, building wake effects, meteorological data, and receptor locations) and analysis results are presented.

8.1.2.1 Construction Emissions

The primary emission sources during construction include heavy equipment emissions and fugitive dust from disturbed areas due to grading, excavating, and construction at the site. A particulate matter emission factor of 0.11 ton of PM_{10} per acre per month was used to estimate fugitive dust emissions (MRI, 1996). The construction schedule calls for the following approximate amounts of acreage to be disturbed during various construction phases (these are not cumulative acreages):

- Months 1-2: 73.7 acres;
- Month 3-5: 35.9 acres;
- Months 6-20: 38 acres; and
- Months 21-24: 2.55 acres.

Based on this construction schedule, the worst-case monthly emissions associated with fugitive dust would occur during the first and second months of construction when 73.7 acres of land are estimated as disturbed. This would result in uncontrolled emissions of approximately 8.11 tons of PM_{10} per month. Assuming 90 percent control efficiency from a fugitive dust suppression program to mitigate construction-related emissions (see Section 8.1.5.10.2 for details on fugitive dust control measures), the controlled worst-case construction dust emissions are estimated to be 0.81 ton/month. The worst-case annual average fugitive dust emissions are estimated to be approximately 5.7 tons/year, based on the average disturbed land acreage listed above for months 1 through 12 and assuming the same fugitive dust emission factor and control efficiency. The worst-case 24-hour average fugitive dust emissions are estimated to be approximately 74 lbs/day, and the worst-case 1-hour average is estimated to be 7.4 lbs/hr.

This project also has another feature that will generate fugitive dust. Fugitive dust will also be generated from earth moving activities required to level the site. There are going to be 337,000 cubic yards (cy) of earth moved at the site during the first 3 months of construction. The analysis was conducted to addresses this activity, considering that the earth is going to be first removed and pushed by backhoes and bulldozers, then loaded into dump trucks by excavator loaders, transported, and finally unloaded.

The fugitive dust sources considered for this activity are the following: dirt pushing and bulldozing, loading of trucks, transportation of earth on unpaved roads, and unloading of trucks. Table 8.1-8 includes required earth-moving equipment, which consists of three dozer tractor crawlers in each of the first 3 months and six dump trucks in month 1 and three dump trucks in months 2 and 3 to accomplish the earthmoving.

The AP-42 calculation methods were used to estimate the PM_{10} fugitive dust emissions. Table 8.1-9 presents the controlled PM_{10} emissions per month of construction and fugitive dust source for this activity. The detailed calculations are presented in Appendix G.

A second source of emissions during construction is equipment exhaust. Equipment-specific emissions factors were used to estimate emissions for all criteria pollutants from construction equipment (SCAQMD, 2005). Table 8.1-8 presents a list of equipment needed during construction and the estimated number of pieces of equipment that would operate during each month of construction. Emissions from equipment would occur over a 24-month construction period. The detailed calculations are presented in Appendix G.

The estimated worst-case hourly, monthly, and annual emissions are presented in Table 8.1-10. Construction emission calculations are provided in Appendix G. Worst-case monthly emissions estimates are based on an assumption that each piece of equipment would operate 50 hours per week (or 200 hours per month) during each month of scheduled activity. Worst-case hourly emissions were estimated by dividing worst-case monthly emissions by 200. Annual emissions were estimated by summing the monthly emissions for all equipment and determining the 12-month period having the highest emissions; emissions for this 12-month period (i.e., months 5 through 16 for NO_X emissions and months 2 through 13 for all other criteria pollutant emissions) were summed to get the annual emissions. Peak emissions of PM_{10} originating from the combination of general construction activities, earth-moving activities and construction vehicle exhaust are presented in Table 8.1-11. Table 8.1-11 presents the combined worst case from the three construction activities that emit PM_{10}.

Secondary emissions of criteria pollutants from the increase in vehicle trips caused by construction and operation are presented in Tables 8.1-12 and 8.1-13, respectively. Included are tailpipe emissions within a 10-mile radius of the site for vehicles carrying workers and for trucks making deliveries. Vehicle type-specific emissions factors were used to estimate emissions for all criteria pollutants from construction equipment (CARB, 2002). The detailed calculations are presented in Appendix G.

Traffic on McDermott Road would increase should the Teresa Creek Bridge detour option be selected (see discussion in Chapter 3). The approximately 1.5 mile portion of McDermott Road between Dirks Road and the Glenn County Line is unpaved gravel. The projected increase in vehicle traffic on the unpaved portion of McDermott Road could result in an increase of fugitive dust emissions while the detour is in effect. This impact will be mitigated through twice daily watering of the unpaved portion of McDermott Road during the entire duration of the detour should the detour option be selected.

8.1.2.2 Operational Emissions

Turbine Emissions. Operational emissions from the two turbines were estimated for all applicable scenarios using base emission rates and startup/shutdown emissions. The base criteria pollutant emission rates provided by the turbine vendor and the engineer for three load conditions (50 percent, 75 percent, and 100 percent) and three ambient temperatures (18°F, 59°F, and 114°F) are presented in Table 8.1-14. Because startup and shutdown events typically had higher emission rates than operating conditions, they were incorporated into the short- and long-term emissions estimates for each turbine for modeling purposes. The expected emissions and duration of startup events are summarized in Table 8.1-15. These worst-case emission estimates are included in Appendix G.

The number of startups were estimated for each quarter. To calculate quarterly emissions, emissions from these startups were added to operational emissions, assuming 100 percent load and 59°F for the specified number of hours per quarter and duct burner operation at 59°F for the specified number of hours. The analysis is conservative because no credit was taken for estimated downtime associated with each shutdown. Estimated annual emissions for the two turbines are presented in Table 8.1-16. Emissions and calculations for all scenarios are contained in Appendix G.

Worst-case short-term emissions from the turbines were calculated for use in the air quality modeling. For worst 1-hour emissions, the worst-case startup condition was used. Based on the startup information,

NO_X, CO, and VOC emissions during a cold startup is the worst-case condition. PM_{10} and SO_X emissions are maximized at peak fuel usage. The maximum amount of fuel is used when the turbines and duct burners are running 100 percent and the ambient temperature is 18°F.

The 3-hour SO_X emission rate was based on the scenario when the turbine and duct burners are running 100 percent and the ambient temperature is 18°F. The 8-hour CO emission rate was calculated assuming one full cold start, one shutdown and the balance (3.0 hours) operating at the worst-case operating condition (both turbines and duct burners are running 100 percent and the ambient temperature is 18°F).

The 24-hour NO_X, CO, and VOC emission rates were calculated assuming one cold start, one shutdown and the balance (19 hours) operating at the worst-case operating condition (turbine and duct burners are running 100 percent and the ambient temperature is 18°F). PM_{10} and SO_X worst-case 24-hour emission rates were calculated assuming the turbine and duct burners are running at 100 percent for 24 hours and the ambient temperature is 18°F for SO_X and 114°F for PM_{10}.

Estimates of worst-case short-term emissions are shown in Table 8.1-17.

Combustion Turbine Commissioning Emissions. The commissioning period as it relates to air quality is discussed in this section. Cold, pre-operational equipment checks will be required; however, these checks will not require the equipment to be running or emitting air pollutants. The Applicant proposes a commissioning period of approximately 6 months during which all installed equipment will be run and tested. The period will be divided into four phases:

1. Gas Turbine 1 (GT-1) Commissioning
2. Gas Turbine 2 (GT-2) Commissioning
3. Commissioning of both HRSGs and the steam turbine
4. Performance and Reliability Testing of the entire plant together

The gas turbine commissioning periods begin when the turbines first burn natural gas. The Applicant will make every effort to minimize emissions of CO, VOC, and NO_x during the commissioning period. However, not all of the equipment to abate these emissions will be fully operational at the start of the commissioning period. The Applicant requests a maximum of 500 hours of partially abated emissions for each gas turbine train.

Once it has been installed, the oxidation catalyst in each train will abate CO and VOC emissions from the gas turbine and the duct burners because it is essentially a passive device. While the SCR catalyst is in some cases able to be installed prior to initial startup of the combustion turbines, it may not be installed until later in the commissioning period, after completion of steam blows which could deposit debris and otherwise damage the catalyst. The SCR catalyst may not be installed at the same time as the oxidation catalyst. NO_x emissions from the gas turbines and the duct burners may be only partially abated during times that the gas turbine burners are being tuned and the SCR system is being tested. Regardless of the fact that the oxidation catalyst and SCR may not be installed until late in the commissioning process, the inherent low emissions of NO_x, CO, and VOC associated with the DLN combustors will ensure that the impacts of these emissions are minimized.

Commissioning emission estimates were very conservatively estimated as worst case by assuming that the control efficiency of the applicable abatement systems is essentially zero during significant portions of the commissioning phase. The emissions during the commissioning period are shown in Table 8.1-18. Peak emission rates of CO and NO_x will only occur from one gas turbine at a time. Where applicable, emission offsets will be the proposed mitigation of these emissions.

The continuous emissions monitoring system (CEMS) will also be undergoing commissioning at this time. Once the CEMS is commissioned, it will record emissions of NO_x and CO. Emissions of SO_2 and PM_{10} may be quantified by using emission factors based on fuel flow.

Auxiliary Boiler. Auxiliary boiler emissions are based on 2,400 hours of operation per year. Emissions are based on vendor supplied emission factors. NO_X emissions are based on 7 ppm. A summary of auxiliary boiler emissions is presented in Table 8.1-19. Emissions and calculations are included in Appendix G.

Emergency Generator Engine and Firewater Pump Engine. The project will include one 1,340 brake horsepower (BHP) diesel engine to power an electrical generator and one 160 BHP diesel engine to power a firewater pump. Emissions were estimated based on hourly emission rates provided by the manufacturers for NO_X, CO, PM_{10}, and VOC. Manufacturers' data sheets on U.S. EPA Tier 2 and CARB Certified candidate engines for these two applications are included in Appendix G. SO_2 emissions were estimated using ultra-low sulfur diesel fuel containing 15 ppm sulfur. Emissions estimates for these two diesel engines are shown in Table 8.1-20. Annual emissions from these engines included in Table 8.1-20 are based on a maximum non-emergency use rate of 50 hours of operation per year for each engine.

Combined Annual Emissions. Total combined annual emissions are shown in Table 8.1-21.

8.1.2.3 Air Dispersion Modeling

The purpose of the air dispersion modeling analysis is to demonstrate that air emissions from the CGS will not cause or contribute to exceeding any state or federal AAQS and will not negatively impact visibility in Class I areas, and to evaluate impacts relative to applicable PSD increments. The modeling addresses emissions from construction activities and routine plant operations. The impacts from construction activities include fugitive dust and emissions associated with combustion byproducts from diesel- and gasoline-fueled equipment. The impacts from routine plant operations are associated with combustion byproducts from the turbine, duct burners, auxiliary boiler, and the two diesel engines. Separate modeling analyses were performed for the construction and the plant operation sources because they will occur during different time periods and have different emission rates. The modeling approach for assessing the CGS impacts is discussed below.

Model and Model Options. The modeling was conducted using the American Meteorological Society/Environmental Protection Agency Regulatory Model (AERMOD) (U.S. EPA, 2004). In November 2005, the U.S. EPA officially recognized AERMOD as the preferred dispersion model for regulatory applications, replacing the Industrial Source Complex Short Term 3 (ISCST3) model. U.S. EPA allowed a one-year "grace period" commencing November 9, 2005 during which the use of either model is acceptable, depending on the preference of the local air quality jurisdiction. For this analysis, AERMOD was selected, because this is consistent with the most recent U.S. EPA policy and the data needed to support its application are available in Colusa County. AERMOD was run with the following additional options:

- Final plume rise at all receptors
- Stack-tip downwash
- Buoyancy-induced dispersion
- Calms processing
- Default wind profile exponents
- Default vertical potential temperature gradients
- Rural dispersion coefficients

Building Wake Effects. The effect of building wakes (i.e., downwash) on the stack plumes was evaluated for the routine plant operating emissions (downwash is not applicable to area sources, i.e., construction activities) in accordance with U.S. EPA guidance (U.S. EPA, 1985). Direction-specific building data were generated for stacks below good engineering practice (GEP) stack height using U.S. EPA's Building Profile Input Program – Prime (BPIP-Prime) (U.S. EPA, 1995). Structures from the proposed CGS layout were included in the analysis. The results of the BPIP analysis were included in the AERMOD input files to assess downwash effects. The AERMOD model considers direction-specific downwash using both the Huber-Snyder and Schulman-Scire algorithms as evaluated in the BPIP program. Input and output files for the BPIP-Prime analysis are included in Appendix G.

Meteorological Data. Meteorological data suitable for input to AERMOD were obtained from Western Weather Group of Chico, California from their Maxwell meteorological station, outside the town of Maxwell (population about 1,300), located approximately 8 miles south of the CGS project site. The 5 years of meteorological data to be used in this modeling analysis include data from 2001 through 2005. Data were missing from each year's dataset, although none of the years was missing 10 percent or more of the data. U.S. EPA-approved techniques were followed to fill in missing data. A protocol was submitted to air regulatory agencies with jurisdiction over this project that identified available meteorological data (URS, 2006). Maxwell data were selected based on subsequent discussions with all these agencies. An electronic copy of the Maxwell data, including relative humidity data and the occurrence of fog and rain, is being provided to the CEC under separate cover.

The hourly atmospheric stability (1-6) was estimated using sigma theta (standard deviation of horizontal wind vector) per U.S. EPA modeling guidelines. The hourly mixing height data used was 600 meters (m) for all hours, as stated in the Modeling Protocol.

The meteorological data recorded at Maxwell are acceptable for use at CGS for two reasons: proximity and terrain similarity, including the very important parameter of surface roughness. As mentioned above, the Maxwell meteorological station is located approximately 8 miles south of the CGS site. The station and the CGS site are located in the west side of the Sacramento Valley with the closest elevated terrain approximately 1 to 2 miles to the west. The terrain in the Sacramento Valley area is relatively flat and only slightly above sea level. The Coast Range provides the terrain boundary of the valley to the west. The highest points in the Coast Range in the area are just above 2,000 feet and lie about 15 miles west. The Sacramento Valley is more than 25 miles across at this point. The Sacramento River lies about 12 miles east of the site. An analysis has been conducted to determine what significant terrain features surround the CGS. The mountains of the Mendocino National Forest to the west of the CGS contain the only significant terrain features. It was determined that only a handful of the receptors within the 10-kilometer modeling grid will have terrain features that rise more than 10 percent. All of these features will be incorporated in the AERMAP analysis, where the terrain domain will be set to cover 25 kilometers to the west of the facility and 15 kilometers to the north, east, and south.

The Maxwell meteorological station is the meteorological recording station closest to the CGS site, and there are no intervening terrain features between the two locations; thus meteorological conditions at the CGS site will be very similar to those at the Maxwell meteorological station. The terrain and land use at both the proposed project site and the meteorological station are identical, having mostly level ground, and both are designated agricultural, which encompasses operations including open space, cattle grazing, or irrigated crops.

The closest National Weather Service (NWS) stations are at Red Bluff (60 miles), Sacramento (70 miles) and Redding (90 miles). None of these stations have land use or terrain as similar to the conditions at the CGS site as the Maxwell Station. Therefore, these sites are not as representative of the meteorological conditions of the project site and were not used as the primary source of meteorological data in the permit modeling for the CGS project. However, it is proposed that the cloud cover data collected at Red Bluff be

used to supplement the Maxwell data because cloud cover data is not recorded at Maxwell. Upper air data from Oakland Airport will also be used in AERMOD.

Annual and seasonal wind roses produced from the 5 years of data from the Maxwell meteorological station are provided in Appendix G.

The land use characteristics surrounding both the CGS and the Maxwell Station are presented in Appendix G. The land use classifications were obtained from the USGS National Land Cover Data (NLCD), 1992. These data show that there are four dominant land use classifications surrounding the facility and the meteorological station. The definitions of these land use classifications are:

- Grasslands/Herbaceous – Areas dominated by upland grasses and forbs. In rare cases, herbaceous cover is less than 25 percent, but exceeds the combined cover of the woody species present. These areas are not subject to intensive management, but they are often utilized for grazing.
- Pasture/Hay – Areas of grasses, legumes, or grass-legume mixtures planted for livestock grazing or the production of seed or hay crops.
- Row Crops – Areas used for the production of crops, such as corn, soybeans, vegetables, tobacco, and cotton.
- Small Grains – Areas used for the production of graminoid crops such as wheat, barley, oats, and rice.

All four classifications encompass rural agricultural or grazing lands. The examination of each on the twelve 30-degree sectors of compass direction surrounding both the facility and meteorological station determined that all sectors are comprised of rural agricultural or grazing lands. Two data sources were used to determine the appropriate surface characteristics, albedo, Bowen ratio and surface roughness, for use in the AERMET meteorological processing: Boundary Layer Climates by T.R. Oke (Oke 1987), and Tables 4-1, 4-2a, 4-2b, 4-2c, and 4-3 in the AERMET manual.

The albedo, the fraction of total incident solar radiation reflected by the surface back to space without absorption, for all four land use classifications is between 0.16 and 0.26 per Oke and 0.14 and 0.20 per AERMET (excluding winter). Because very little snow falls, and even less accumulates, the winter surface characteristics described in the AERMET manual are not applicable to these sites. The albedo is dependant upon the amount of vegetation. From the land use definitions above for all four classifications and analysis of aerial photos of the area, very little variation in the albedo is expected around either the facility or meteorological station. Hence, for all sectors surrounding the facility and meteorological station an albedo of 0.18 will be used for spring through autumn and an albedo of 0.4 will be used for winter.

The Bowen ratio is a measure of atmospheric moisture. Oke states that for grasslands the value is between 0.4 and 0.8. At the nearest NWS meteorological station, Red Bluff, the average annual precipitation is 23.5 inches. Because this is neither an arid or excessively moist area, the Bowen ratios for average moisture conditions from the AERMET manual were examined. The Bowen ratios ranged from 0.3 to 1.0 (excluding winter). Thus it was determined that the appropriate Bowen ratio for areas surrounding the facility and meteorological station is 0.4 for spring, 0.6 for summer, 0.8 for autumn, and 1.0 for winter.

The surface roughness length, z_o, is related to the height of the obstacles the wind must flow over. The surface roughness rule-of-thumb, as described by Oke, is $z_o = 1/10$ h, where h is the canopy height. The canopy height is the height of the vegetation, and the height of the vegetation is dependant upon the

season and the type of crop. Oke describes the surface roughness for crops and grasslands to be between 0.04 and 0.20 meter(m). The AERMET characterizes surface roughness to be between 0.01 and 0.20 m (excluding winter). Hence it was determined that the appropriate surface roughness length to describe the lands surrounding both the facility and meteorological station is 0.04 m for spring, 0.15 m for summer, 0.07 m for autumn, and 0.01 m for winter.

Receptors. AERMOD used the following receptor spacing:

- 25-meter spacing along the property line and extending from the property line out to 100 meters;
- 100-meter spacing within 1 kilometer of project sources for any locations not covered by the 25-meter grid;
- 500-meter spacing within 1 to 5 kilometers of project sources;
- 1,000-meter spacing within 5 to 10 kilometers of project sources; and
- If maximum concentrations are predicted where the grid spacing is less dense than 25 meter, a 25-meter spaced nested grid of receptors was placed surrounding the receptor where the maximum concentration was predicted. This nested grid extended out 500 meters in all directions or until the next regular grid receptors was encountered.

The receptor locations were designated using Universal Transverse Mercator (UTM) coordinates. Receptor elevations were obtained from U.S. Geological Survey (USGS) 7.5-minute electronic data.

Emission Scenarios. The modeling for the CGS required the determination of worst-case emissions scenarios for the following averaging periods and pollutants to demonstrate compliance with AAQS:

- 1-hour for CO, NO_2, and SO_2;
- 3-hour for SO_2;
- 8-hour for CO;
- 24-hour for PM_{10}, $PM_{2.5}$ and SO_2; and
- Annual for PM_{10}, $PM_{2.5}$, NO_2, and SO_2.

Project Site Construction Impact Modeling. For construction activities at the project site, it was assumed that the combustion equipment emissions would be released in the area of the construction zone within the CGS property boundary. Due to the large amount of construction equipment needed for the proposed project, it was necessary to define a representative source or sources. For construction equipment emissions, it was assumed that the equipment exhaust emissions would be emitted from two volume sources within the construction zone. PM_{10} emissions from fugitive dust were modeled using two area sources. The area sources were placed to include the construction, laydown, and contractor parking areas. See Figure 3.2-1 for a definition of these areas.

The worst-case hourly and annual emission rates were used to model short-term and annual emissions, respectively. Fugitive dust emissions were included for both annual and 24-hour PM_{10} impacts. The modeled release parameters for the construction activities are presented in Table 8.1-22.

Turbine Impact Screening Modeling. Screening modeling was performed to determine which turbine operating modes (i.e., load level, duct burner firing, ambient temperature) produced "worst-case" impacts for each pollutant and averaging time. AERMOD was used for the screening analysis, with the 2001 meteorological data, building wake information and the receptor grid previously described.

The model simulated natural gas combustion emissions from two 19-foot-diameter (5.8-m), 175-foot-tall (53.34-m) stacks. The stacks were modeled as point sources at their proposed locations. The stack parameters for each operating mode are shown in Table 8.1-22. Table 8.1-23 also details the screening modeling results for the twelve combustion turbine operating conditions.

Refined Modeling. Refined modeling was performed to identify offsite, criteria pollutant impacts from operational emissions of the proposed project. The modeling was performed as previously described. However, in addition to the turbine/HRSG, the generator and fire pump engines and auxiliary boiler were also included in the refined modeling analysis.

Based on the screening results, stack parameters from the 50 percent load, with no duct firing, at 114°F ambient temperature simulate worst-case 1-hour dispersion. These parameters were used in the modeling to provide a conservative value for the pollutant dispersion. Pollutant emission rates for warm startups and cold startups (summarized in Table 8.1-15) were applied to these dispersion impacts to represent worst-case, short-term impacts of CO (1-hour) and NO_2 (1-hour), respectively.

The SO_2 1-hour impact was estimated using the actual emission rate and stack parameters for the 100 percent load, with duct firing, at 18°F ambient temperature operating mode.

Annual average impacts were estimated using the stack parameters for the 100% load, with duct firing, at 59F ambient temperature operating mode. Annual emission rates for NO_2, PM_{10}, and SO_2, shown in Table 8.1-8, were used in the analysis. PM_{10} 24-hour impacts were based on the actual emission rate and stack parameters for the 100 percent load, with duct firing, at 114°F ambient temperature operating mode. Short-term, worst-case emission rates are summarized in Table 8.1-24.

Hourly NO_2 impacts were estimated using the ozone limiting method (OLM) with the AERMOD-OLM model (Version 96113). Ozone data used in the OLM model was obtained from the Willows Station.

Fumigation Analysis. Fumigation occurs when a plume that was originally emitted into a stable layer of air is mixed rapidly to ground level when unstable air below the plume reaches plume level. Fumigation can cause very high ground-level concentrations. Fumigation can occur during the break up of the nocturnal radiation inversion by solar warming of the ground surface (inversion breakup fumigation). Such conditions are short-lived and are typically compared only with 1-hour standards. A fumigation analysis was performed using the U.S. EPA SCREEN3 model (Version 96043). Fumigation impacts are summarized in Table 8.1-25.

Combustion Turbine Impact Modeling During Commissioning. Impacts were estimated for NO_2 and CO during commissioning using AERMOD. Ambient air quality impacts from the commissioning phase of this project for 1-hour NO_2 were shown to be 209.8 $\mu g/m^3$. The commissioning impacts for 1-hour and 8-hour CO were shown to be 1,630 $\mu g/m^3$ and 496 $\mu g/m^3$, respectively. The NO_2 impacts are lower for commissioning that during cold startup because only one turbine has high NO_x emissions at a time during commissioning. CO impacts during commissioning are slightly higher than during startup but would not pose any threat to the CO AAQS. As indicated in Table 8.1-18, commissioning produces no emission changes for SO_x and PM_{10}, only for VOC, CO, and NO_x. VOC impacts are not modeled. Results of modeling NO_2 and CO during gas turbine commissioning are shown in Appendix G.

8.1.2.4 Compliance with Ambient Air Quality Standards

Air dispersion modeling was performed as described in Section 8.1.2.3 to evaluate the increase in pollutant ground level concentrations from the project emissions relative to the applicable short-term and long-term AAQS. The impacts from construction activities and plant operations were analyzed separately because they would occur during different time periods. The maximum increases were added to the maximum background concentrations based on air quality data collected for the most recent 3 years (i.e.,

2003 to 2005) except for the 1-hour NO_2 background which used the arithmetic average of the three 1-hour maxima from the 2003 – 2005 period. The impact was then compared with the most stringent state or federal AAQS. Modeled impacts are summarized in Table 8.1-24 for construction activities and plant operations.

Construction Activities. Air dispersion modeling of construction emissions was performed to satisfy CEC requirements. All maximum criteria pollutant concentrations for construction at the project site, were predicted to occur at receptors along or within 50 meters (or within the first two rows of receptors) of the boundary of the facility. Model output for these runs are included in Appendix G. Construction impacts on AAQS are not the primary focus of the air regulatory agencies because construction emissions would be temporary in nature and would not coincide with emissions from plant operations. Construction mitigation measures, described in Section 8.1.5.10.2, will be used to minimize impacts from temporary construction emissions.

Normal Plant Operations. Maximum modeled impacts are below applicable federal PSD significant impact levels for all criteria pollutants. Modeled impacts due to plant operation emissions from the proposed project would not cause a violation of any federal or state AAQS and would not significantly contribute to the existing violations of the state PM_{10} or ozone standards.

Almost all of the particulate matter emissions from the CGS under normal operations will be equal to or less than 2.5 microns in diameter because it will be generated exclusively from combustion processes. The modeled PM_{10} impacts from operation therefore also could be viewed as representing $PM_{2.5}$ impacts. Doing so, and adding the $PM_{2.5}$ impacts from the CGS to the monitored $PM_{2.5}$ background concentrations (see Table 8.1-4) and comparing the results to the applicable AAQS demonstrates that no violation of any federal or state $PM_{2.5}$ AAQS would be caused by the CGS. Therefore, no mitigation specific to $PM_{2.5}$ impacts is included later in Section 8.1.4. However, the proposed PM_{10} mitigation measures discussed in Section 8.1.4 are also heavily drawn from combustion processes so $PM_{2.5}$ mitigation will result.

The 24-hr PM_{10} impact from normal operation shown in the modeling results on Table 8.1-24 represents the second highest modeled output out of 5 years of meteorological data (representing a period of about 1,825 days). This approach was necessary because the results from the operating scenario of both gas turbines in the 50% load, 114 F case for the full 24-hour period contained one day with an impact greater than the EPA 24-hr PM_{10} Significant Impact Level (SIL) of 5 $\mu g/m^3$. The modeled concentration for that day was 6.11 $\mu g/m^3$ at a location about 4.5 km west of the site. No other day modeled for any of the remaining eleven operating scenarios evaluated for any day of the entire five-year period produced results equal to or greater than 5 $\mu g/m^3$ at any receptor location. Removing the results of this one day was done specifically for comparison to the EPA SIL. It has no measurable impact when comparing the results to any federal or state AAQS. This approach is consistent with the modeling protocol (URS, 2006) and demonstrates that the SIL will not be exceeded. This day was discounted for only this instance. All other impacts reported from operations use the highest impact modeled.

Fumigation impacts were estimated as described in Section 8.1.2.3 and are summarized in Table 8.1-25. Fumigation impacts are all below PSD significance thresholds. Predicted Class 1 Area Pollutant Concentrations from the CGS compared to proposed and adopted SILS are listed in Table 8.1-26.

Emission Offsets. The emission offset requirement was developed to facilitate net air quality improvement. The proposed project impacts for the nonattainment pollutants (PM_{10} and ozone) and their precursors (NO_X, VOC, SO_2 and PM_{10}) will be mitigated by emission offsets. These offsets have not been accounted for in the modeled impacts noted above. Thus, the proposed project's modeled impacts may significantly overestimate actual project impacts because they do not account for the effect of removing future PM_{10}, NO_X, and VOC from areas surrounding the project site.

8.1.2.5 Impacts on Air Quality–Related Values in Class I Areas

Specific national parks, wilderness areas, and national monuments are designated as Class I areas and are protected by the most stringent PSD requirements. The PSD regulations require an assessment of the impacts of major sources on AQRVs in Class I areas. AQRVs include:

- Visibility;
- Terrestrial resources (e.g., vegetation, geological features, wildlife); and
- Aquatic resources (e.g., lakes, streams, aquatic biota).

This section addresses potential impacts on AQRVs in the closest Class I area, which is Yolla Bolly-Middle Eel Wilderness, located approximately 88 kilometers northwest of the proposed project site, and administered by the National Park Service.

Effects on Visibility. The Clean Air Act (CAA) established the importance of visibility for Class I areas by declaring a goal to prevent future visibility impairment and remedy existing visibility impairment due to man-made air pollution. The CAA also specifically requires that visibility be addressed as an AQRV within all Class I areas. However, visibility is not uniformly affected by air pollution. Visibility varies on a site-by-site basis and is affected by meteorology, topography, the relative position of the viewer and the sun, and other variables. In addition, the assessment of visibility depends on subjective human perceptions. As a result, it is often difficult to assess the condition of the visibility AQRV.

This analysis was conducted using the screening version of the CALPUFF model and the same meteorological input data used for the AAQS modeling analysis. Applicable recommendations from the CALPUFF Reviewer's Guide (Draft) of September 2005 prepared for the National Park Service and the National Forest Service were implemented in the screening version of CALPUFF AQRV modeling.

Using weather from 2001 through 2004 in CALPUFF resulted in between 8 and 15 days per year with 5 percent extinction change. Reviewing the precipitation data for those days of exceedance, almost half of those exceedance days had precipitation. Visibility is affected by rainfall.

Because relative humidity plays an important role in the growth of light scattering particles, periods of high humidity due to clouds and rain would naturally compromise visibility and therefore these few suggested high visibility impacts likely coincide with periods of naturally obscuring phenomena and can be discounted. Further review of the remaining 4 to 6 days per year of 5 percent extinction indicated that wind direction on those days was from the Class 1 area toward the CGS. Therefore, the emissions from the CGS would not be carried in the direction of the Class I area. Therefore, the CGS screening successfully passed all screening criteria.

Terrestrial Resources. Maximum modeled annual NO_2 and SO_2 impacts from normal plant operations, as well as estimates of total nitrogen and sulfur deposition estimated by CALPUFF, were compared against Deposition Analysis Threshold (DAT) for individual sources established by the National Park Service (NPS) for vegetation and ecosystems for Class I Wilderness Areas. Table 8.1-27 summarizes the maximum modeled impacts versus the NPS and the USFS significance criteria. All impacts are below the significance criteria.

Aquatic Resources. A significant effect of NO_x and SO_2 emissions on aquatic resources is nitrogen and sulfur deposition and subsequent acidification. However, because any increased nitrogen and sulfur deposition due to the proposed project would be minimal, impacts to water acid neutralizing capacity (ANC) and pH, and, therefore, acidification or eutrophication, are not likely to occur.

8.1.3 Cumulative Impacts Analysis

CEC requirements specify that an analysis is required to determine the cumulative impacts of the Colusa Generating Station project and other projects within a 6-mile radius that have received construction permits but are not yet operational, are in the permitting process, or that have not historically operated at their full potential to emit. The cumulative impact analysis assesses whether estimated emissions concentrations may cause or contribute to a violation of any ambient air quality standard.

A request was sent to CCAPCD for a listing of facilities that are permitted but not yet in operation within a 6-mile radius of the proposed project site or are in the permitting process. No facilities were identified by the CCAPCD meeting these criteria.

CCAPCD has confirmed that the only sources required to be included in the Cumulative Impact Analysis other than the Colusa Generating Station are the three gas turbines at the PG&E Delevan Compressor Station. The PG&E Delevan Compressor Station is adjacent to the CGS. The approach to be used for the DCS modeling was included in the Colusa Modeling Protocol (URS, 2006). The Delevan Compressor Station emits NO_X, CO, PM_{10} and SO_2 so the cumulative analysis focused only these pollutants. Year 2003 was the year with the highest background NO_X measurements within the last 3 years. Therefore, the operation of the DCS was modeled both for a full load hour and for the increment between actual 2003 annual hours of operation and full year (8,760) hours of operation.

The results of the cumulative impact analysis are reported in Table 8.1-28. The cumulative impact analysis results for CO are well below significance levels. The cumulative impact analysis for NO_x shows that the worst-case 1-hour result would occur about 2 km west of the CGS site. All cumulative impacts demonstrated compliance.

8.1.4 Mitigation Measures

This section discusses the mitigation measures proposed by the Applicant that will be implemented to reduce project-related impacts to air quality.

AIR-1 Emission Reduction Credits

CCAPCD rules require that operational emissions of the proposed project be offset by emission reduction credits (ERCs) at other sources within or outside the CGS. Specifically, Regulation 3, Rule 3-6 for permitted new sources requires that emission offsets are required for the portion of that source's emissions of nonattainment criteria pollutants (and their precursors) exceeding 25 tons per year (tpy). The nonattainment criteria pollutants in Colusa County per CCAPCD rules are ozone and PM_{10}. Ozone precursors are NO_X and VOC. PM_{10} precursors are PM_{10} and SO_2. Colusa County is in attainment status for ozone and PM_{10} as nonattainment criteria pollutants in Colusa County. Furthermore, the CCAPCD ERC rule is not included in the portion of the CCAPCD rules that have received federal approval in the State Implementation Plan (SIP). Therefore, there are no federal requirements either to provide ERCs or for federal oversight of the CCAPCD approval of ERCs. The ERC requirements for the CGS therefore are the amount of ozone precursors (NO_X and VOC) that exceeds 25 tons per year and that amount of PM_{10} (and SO_2) that exceeds 25 tons per year.

These credits must be provided at ratios corresponding to the distance of the credit generating source from the CGS for offsite ERCs. These pollutants must be offset within the same quarter of the year in which they are emitted. Project emissions will be offset with credits from the following two ERC sources:

1. Offsite ERCs resulting from emissions reductions at stationary sources available from the CCAPCD ERC banking system or other APCD banking systems within the air basin.

These ERCs will be provided at a ratio corresponding to the distance of the reduction source from the CGS; and

2. Emission offsets from emission reductions associated with the elimination of open biomass burning of agricultural residue. CCAPCD has specific provisions in Rule 3-16 to provide for the creation of emission reduction credits for reduced open burning. The rule sets forth the basis for calculating emission offsets based on:

   - Quantity of biomass displaced (acres);
   - Emission factor for each biomass type;
   - Location of displaced open burning;
   - Historical burn fractions (HBF) for each crop type by county, representing the fraction of the planted crop that has historically been open burned; and
   - Quarterly distribution fractions (QDF) for each crop type by county, representing the historical distribution of open burning in each of the calendar quarters of the year.

   Open biomass burning ERCs also will be provided at a ratio corresponding to the distance of the reduction source from the CGS.

E&L Westcoast has obtained options to purchase ERCs to meet the offset needs of the proposed project. These option contracts will be submitted under separate cover to protect certain confidential information.

8.1.5 Laws, Ordinances, Regulations, and Standards

The applicable laws, ordinances, regulations, and standards (LORS) related to the potential air quality impacts from the CGS are described below, and shown in Table 8.1-29. These LORS are administered (either independently or cooperatively) by the CCAPCD, U.S. EPA Region IX, the CEC, and the California Air Resources Board. The area of responsibility for each of these agencies is described below.

U.S. EPA has ultimate responsibility for ensuring, pursuant to the CAAA, that all areas of the United States meet, or are making progress toward meeting, the federal AAQS. The State of California falls under the jurisdiction of U.S. EPA Region IX, which is headquartered in San Francisco. U.S. EPA requires that all states submit State Implementation Plans (SIPs) for nonattainment areas that describe how the federal AAQS will be achieved and maintained. Attainment plans must be approved by CARB before they are submitted to U.S. EPA.

Regional or local air quality management districts (or air districts), such as CCAPCD are responsible for preparation of plans for attainment of federal and state standards. CARB is responsible for overseeing attainment of the California AAQS, implementation of nearly all phases of California's motor vehicle emissions program, and oversight of the operations and programs of the regional air districts.

Each air district is responsible for establishing and implementing rules and control measures to achieve air quality attainment within its district boundaries. The air district also prepares an air quality management plan (AQMP) that includes an inventory of all emission sources within the district (both man-made and natural), a projection of future emissions growth, an evaluation of current air quality trends, and an assessment of any rules or control measures needed to attain the AAQS. This AQMP is submitted to CARB, which then compiles AQMPs from all air districts within the state into the SIP. The responsibility of the air districts is to maintain an effective permitting system for existing, new, and

modified stationary sources, to monitor local air quality trends, and to adopt and enforce such rules and regulations as may be necessary to achieve the AAQS.

8.1.5.1 Ambient Air Quality Standards

U.S. EPA, in response to the federal Clean Air Act of 1970, established federal AAQS in Title 40 Code of Federal Regulations (CFR) Part 50. The federal AAQS include both primary and secondary standards for six "criteria" pollutants. These criteria pollutants are ozone (O_3), CO, NO_2, SO_2, PM_{10}, and lead (Pb). Primary standards were established to protect human health, and secondary standards were designed to protect property and natural ecosystems from the effects of air pollution.

The 1990 Clean Air Act Amendments (CAAA) established attainment deadlines for all designated areas that were not in attainment with the federal AAQS. In addition to the federal AAQS described above, a new federal standard for $PM_{2.5}$ and a revised O_3 standard were promulgated in July 1997. The new federal standards were challenged in a court case during 1998. The court required revisions in both standards before U.S. EPA can enforce them. The U.S. Supreme Court upheld an appeal of the District Court decision in February 2001. These issues were resolved and the 1-hour O_3 standard revoked in 2005 while the revised $PM_{2.5}$ standard was made effective in 2006. The State of California has adopted California AAQS that are in some cases more stringent than the federal AAQS. The state and federal AAQS relevant to the CGS are summarized in Table 8.1-30.

The U.S. EPA, CARB, and the local air pollution control districts determine air quality attainment status by comparing local ambient air quality measurements from the state or local ambient air monitoring stations with the federal and California AAQS. Those areas that meet ambient air quality standards are classified as "attainment" areas; areas that do not meet the standards are classified as "nonattainment" areas. Areas that have insufficient air quality data may be identified as unclassifiable areas. These attainment designations are determined on a pollutant-by-pollutant basis. The CCAPCD is designated a state nonattainment area for PM_{10} and ozone based on air quality monitoring data showing exceedances of the state standards. Table 8.1-31 presents the attainment status (both federal and state) for Colusa County.

As mentioned above, both U.S. EPA and CARB are involved with air quality management in the Colusa area along with CCAPCD. .

8.1.5.2 Prevention of Significant Deterioration Requirements

In addition to the ambient air quality standards described above, the federal Prevention of Significant Deterioration program has been established to protect deterioration of air quality in those areas that already meet NAAQS. The PSD program specifies allowable concentration increases for attainment pollutants due to new emission sources. These increases allow economic growth while preserving the existing air quality, protecting public health and welfare, and protecting Class I areas (national parks and wilderness areas). The PSD regulations require major stationary sources to undergo a preconstruction review that includes an analysis and implementation of BACT, a PSD increment consumption analysis, an ambient air quality impact analysis, and analysis of AQRVs (impacts on visibility). The CGS is subject to these requirements.

The incremental emission PSD triggers for SO_2, NO_X, PM_{10}, and CO are as shown in Table 8.1-32. For project emissions of SO_2, NO_X, or PM_{10} above these PSD triggers, the Applicant must demonstrate through modeling that such emissions will not interfere with the attainment or maintenance of the applicable NAAQS and will not cause an exceedance of the applicable PSD increments shown in Table 8.1-34. For project emissions of CO that exceed the trigger levels, the Applicant must demonstrate through modeling that the increase in emissions will not interfere with the attainment or maintenance of the CO NAAQS. Allowable PSD increments for SO_2, NO_X, and PM_{10} are summarized in Table 8.1-33.

There are no Class I areas within CCAPCD. Yolla Bolly-Middle Eel Wilderness and Caribou Wilderness are the Class I areas nearest to the site. All areas within the district are Class II areas; there are no Class III areas within the CCAPCD.

8.1.5.3 Acid Rain Program Requirements

Title IV of the CAAA applies to sources of air pollutants that contribute to acid rain formation, including certain sources of SO_2 and NO_X emissions. Title IV is implemented by the U.S. EPA under 40 CFR 72, 73, and 75. Allowances of SO_2 emissions are set aside in 40 CFR 73. Sources subject to Title IV are required to obtain SO_2 allowances, to monitor their emissions, and obtain SO_2 allowances when a new source is permitted. Sources such as the CGS that use pipeline-quality natural gas are exempt from many of the acid rain program requirements. However, these sources must still estimate SO_2 and CO_2 emissions, and monitor NO_X emissions with certified continuous emissions monitoring systems (CEMS). All subject facilities must submit an acid rain permit application to U.S. EPA 24 months prior to commencing operation.

8.1.5.4 New Source Performance Standards

New Source Performance Standards (NSPS) have been established by U.S. EPA to limit air pollutant emissions from certain types of new and modified stationary sources. The NSPS regulations are contained in 40 CFR 60 and cover nearly 70 source categories. Stationary gas turbines are regulated under Subpart KKKK

In general, local emission limitation rules or BACT requirements are more restrictive than the NSPS requirements. For example, the controlled NO_X emissions from the CGS's stationary gas turbine will be controlled to 2.0 or less parts per million by volume dry (ppmvd) at 15 percent oxygen, significantly less than the NSPS limit of 15 ppmvd at 15 percent oxygen.

The NSPS fuel requirements for SO_2 will be satisfied by the use of natural gas, and emissions and fuel monitoring will be performed to comply with NSPS, acid rain, and other regulatory requirements.

8.1.5.5 Federally Mandated Operating Permits

Title V of the CAA requires U.S. EPA to develop a federal operating permit program that is implemented under 40 CFR 70. This program is administered by CCAPCD under Regulation 3, Rule 3.17. Permits must contain emission estimates based on potential-to-emit, identification of all emission sources and controls, a compliance plan, and a statement indicating each source's compliance status. The permits must also incorporate all applicable federal, state, or CCAPCD orders, rules and regulations.

Because the facility will constitute a new stationary source, the Applicant will submit a complete Title V permit application for a Title V permit to operate within 12 months after plant startup.

8.1.5.6 Power Plant Siting Requirements

Under the California Environmental Quality Act (CEQA), the CEC has been charged with assessing the environmental impacts of each new power plant and considering the implementation of feasible mitigation measures to prevent potential significant impacts. CEQA Guidelines (Title 14, California Administrative Code, Section 15002(a)(3)) state that the basic purpose of CEQA is to "prevent significant, avoidable damage to the environment by requiring changes in projects through the use of alternatives or mitigation measures when the governmental agency finds the changes to be feasible."

The CEC's siting regulations require that, except under certain conditions, a new power plant can only be approved if the proposed project complies with all federal, state, and local air quality rules, regulations,

standards, guidelines, and ordinances that govern the construction and operation of the proposed project. A project must demonstrate that project emissions will be appropriately controlled to mitigate significant impacts from the project and that it will not jeopardize attainment and maintenance of the AAQS. Cumulative impacts, impacts due to pollutant interaction, and impacts from noncriteria pollutants must also be considered.

8.1.5.7 Air Toxics "Hot Spots" Program

As required by the California Health and Safety Code Section 44300, all facilities with criteria air pollutant emissions in excess of 10 tons per year are required to submit air toxic "Hot Spots" emissions information. This requirement is applicable only after the start of operation. Section 8.6, Public Health, indicates that air toxics impacts from the CGS would be less than significant.

8.1.5.8 Determination of Compliance, Authority to Construct and Permit to Operate

Under Regulation 3, Rule 3.6, CCAPCD administers the air quality regulatory program for the construction, alteration, replacement, and operation of new power plants. The proposed project is required to obtain a preconstruction Determination of Compliance from the CCAPCD. Regulation 3, Rule 3.6 incorporates other CCAPCD rules that pertain to sources that may emit air contaminants through the issuance of air permits (i.e., Authority to Construct and Permit to Operate). This permitting process allows the CCAPCD to adequately review new and modified air pollution sources to ensure compliance with all applicable prohibitory rules and to ensure that appropriate emission controls are used. An ATC allows for the construction of the air pollution source and remains in effect until the Permit to Operate (PTO) application is granted, denied, or canceled. For power plants under the siting jurisdiction of the CEC, the CCAPCD issues a Determination of Compliance in lieu of an ATC. The Determination of Compliance is incorporated into the CEC license. Once the project commences operations and demonstrates compliance with the Determination of Compliance, CCAPCD will issue a PTO. The PTO specifies conditions that the air pollution source must meet to comply with other air quality standards and will incorporate applicable Determination of Compliance requirements. An application for the Determination of Compliance will be submitted to the CCAPCD simultaneously with the filing of the AFC.

8.1.5.9 New Source Review Requirements

The federal Clean Air Act, U.S. EPA regulations, and the California Clean Air Act establish the criteria for siting new and modified emission sources. The federally mandated process for permitting new or modified sources in federal nonattainment areas is referred to as Nonattainment New Source Review (NNSR). This requirement is not applicable in this case because the county is in attainment from the federal perspective. Due the state-level non-attainment status, CCAPCD is responsible for NSR rule development and enforcement for sources in Colusa County. The District's NSR rules are contained in Regulation 3, Rule 3.6. The rules required that first, Best Available Control Technology (BACT) must be applied to any new source that emits above the level specified in Regulation 3, Rule 3.6. Second, all potential emission increases from the sources above specified thresholds must be offset by real, quantifiable, surplus, permanent, and enforceable emission decreases in the form of ERCs, Regulation 3, Rule 3.16 "Emission Reduction Credit and Banking" (see Section 8.1.4). Third, ambient air quality impact assessments must be conducted to confirm that the proposed project does not cause or contribute to a violation of a federal or California AAQS (see Section 8.1.2.4) or jeopardize public health (see Section 8.6). Finally, the Applicant must certify that all major sources owned or operated in the State of California are either in compliance or on an approved schedule for compliance with applicable air quality regulations.

8.1.5.10 Colusa County Air Pollution Control District Requirements

The CCAPCD has been delegated responsibility for implementing the federal, state, and local regulations on air quality in Colusa County. The proposed project is subject to CCAPCD regulations that apply to new sources of emissions, to the prohibitory regulations that specify emissions standards, and to the requirements for evaluation of air pollutant impacts for both criteria and toxic air pollutants. The following sections include the evaluation of the project's compliance with the applicable CCAPCD requirements.

8.1.5.10.1 Rules and Regulations

The following paragraphs outline the CCAPCD rules and regulations that apply to the proposed project.

Regulation 1 – General Provisions

Rule 1.8 "Emission Monitoring": The Air Pollution Control Officer may require the owner of any air contaminant source to install, use, and maintain monitoring equipment; sample emissions; establish and maintain records; and make periodic emission reports in a format acceptable to the Air Pollution Control Officer.

Rule 1.9 "Records and Reports": Air pollution monitoring data, facility operation records, and such fuel composition data as deemed necessary shall be recorded, compiled, and submitted to the Air Pollution Control Officer by the owner of a stationary source.

Rule 1.10 "Tests": All tests shall be made and the results calculated in accordance with test procedures approved by the Air Pollution Control Officer. All tests shall be made under the direction of person qualified by training and experience in the field of air pollution control and approved by the Air Pollution Control Officer.

The Air Pollution Control Officer may conduct or require the owner of a stationary source to conduct tests of emissions of air contaminants from any source. Upon request of the Air Pollution Control Officer, the person responsible for the source to be tested shall provide necessary holes in stacks or ducts and such other safe and proper sampling and testing facilities, exclusive of instruments and sensing devices as may be necessary for proper determination of the emission of air contaminants.

Rule 1.11 "Field Inspection": Each source of air pollution subject to permit or registration shall be inspected or tested at such intervals of time so that no extended periods of violations will occur.

Rule 1.12 "Air Pollution Equipment, Scheduled Maintenance": In the case of shutdown or restart of air pollution control equipment for necessary scheduled maintenance, the intent to shut down such equipment shall be reported to the Air Pollution Control Officer at least 24 hours prior to the planned shutdown. Such prior notice shall include, but is not limited to the following:

- Identification of the specific facility to be taken out of service as well as its location and permit number;
- The expected length of time that the air pollution control equipment will be out of service;
- The nature and quantity of emissions of air contaminants likely to occur during the shutdown period;

- Measures such as the use of off-shift labor and equipment that will be taken to minimize the length of the shutdown period;

- The reasons that it would be impossible or impractical to shutdown the source operation during the normal facility maintenance period.

Rule 1.13 "Equipment Breakdown": In the event that any emission source, air pollution control equipment, or related facility breaks down in such a manner that may cause the emission of air contaminants in violation of this article, the person responsible for such equipment shall immediately notify the Air Pollution Control Officer of such failure or breakdown and subsequently provide a written statement giving all pertinent facts, including the estimated duration of the breakdown. The Air Pollution Control Officer shall be notified when the condition causing the failure or breakdown has been corrected and the equipment is again in operation.

Regulation 2 – Prohibitions

Rule 2.10 "Nuisance": In accordance with Section 41700 of the California Health and Safety Code, a person shall not discharge from any source whatsoever such quantities of air contaminants or other materials that cause injury, detriment, nuisance, or annoyance to any considerable number of persons or to the public or that endanger the comfort, repose, health, or safety of any such person or the public or which cause or have a natural tendency to cause injury or damage to business or property. The air quality impact analysis is designed to ensure that the proposed project will not cause any public nuisance.

Rule 2.13 "Visible Emissions": As provided by Section 41701 of the California Health and Safety Code, a person shall not discharge into the atmosphere from any single source of emissions whatsoever, any air contaminants for a period or periods aggregating more than 3 minutes in any 1 hour which is

a. As dark or darker in shade as that designated as No. 2 on the Ringelmann Chart, as published by the United States Bureau of Mines; or

b. Of such opacity as to obscure an observer's view to a degree equal to or greater than does smoke described in subsection a., above.

Rule 2.15 "Particulate Matter Concentration": A person shall not discharge into the atmosphere from any source, except as allowed by Rule 2.14, subsection a. and c. of this regulation, particulate matter in excess of 0.3 grain per standard dry cubic foot of gas. Emissions from each source at the site are expected to be compliant with this regulation. PM_{10} emissions are not expected to exceed 0.02 grain per dry standard cubic feet.

When the source involves a combustion process, the concentration must be calculated to 12 percent carbon dioxide (CO_2). In measuring the combustion, contaminants from incinerators used to dispose of combustible refuse by burning the CO_2 produced by combustion of any liquid or gaseous fuels shall be excluded from the calculation to 12 percent of CO_2.

Rule 2.16 "Dust and Fumes": A person shall not discharge in any 1 hour from any source whatsoever, except as provided by Rule 2.14, subsections a. and c. of this regulation, dust or fumes in total quantities in excess of the amounts shown in the following table:

Process Weight Rate		Rate of Emission	Process Weight Rate		Rate of Emission
Lb./Hr.	Ton/Hr.	Lb./Hr.	Lb./Hr.	Ton/Hr.	Lb./Hr.
100	0.15	0.551	16,000	8.0	16.5
200	0.10	0.877	18,000	9.0	17.9
400	0.20	1.40	20,000	10.0	19.2
600	0.30	1.83	30,000	15.0	25.2
800	0.40	2.22	40,000	20.0	30.5
1,000	0.50	2.58	50,000	25.0	35.4
1,500	0.75	3.38	60,000	30.0	40.0
2,000	1.00	4.10	70,000	35.0	41.3
2,500	1.25	4.70	80,000	40.0	42.5
3,000	1.50	5.38	90,000	45.0	43.6
3,500	1.75	5.96	100,000	50.0	50.0
4,000	2.00	6.52	120,000	60.0	46.3
5,000	2.50	7.58	140,000	70.0	47.8
6,000	3.00	8.56	180,000	80.0	49.0
7,000	3.50	9.49	200,000	100.0	51.2
8,000	4.00	10.4	1,000,000	500.0	69.0
9,000	4.50	11.2	2,000,000	1,000.0	77.6
10,000	5.00	12.0	6,000,000	3,000.0	92.7
12,000	6.00	13.6			

Rule 2.17 "Separation of Emissions": If air contaminants from a single source operation are emitted through two or more emission points, the total emitted quantity of any air contaminant limited in this regulation cannot exceed the quantity that would be the allowable emission through a single emission point; the total emitted quantity of any such air contaminant shall be taken as the product of the highest concentration measured in any of the emission points and the combined exhaust gas volume from all emission points, unless the person responsible for the source operation establishes, to the satisfaction of the Air Pollution Control Officer, the correct total emitted quantity.

Rule 2.18 "Combination of Emissions":

a. If air contaminants from two or more source operations are combined prior to emission and there are adequate and reliable means reasonably susceptible to confirmation and use by the Air Pollution Control Officer for establishing a separation of the components of the combined emission to indicate the nature, extent, quantity, and degree of emission arising from each source operation, then all of the applicable prohibitions shall apply to each such source operation separately.

b. If the air contaminants from two or more source operations are combined prior to emission, and the combined emissions cannot be separated according to the requirements of subsection a. of this rule, then all applicable prohibitions shall be applied to the combined emission as if it originated in a single source operation, subject to the most stringent limitations and requirements placed by these prohibitions on any of the source operations whose air contaminants are so combined.

Rule 2.22 "Sulfur Oxides": A person shall not discharge into the atmosphere from any single source of emission whatsoever, any sulfur oxides in excess of 0.2 percent by volume (2,000 ppm) collectively calculated as sulfur dioxide (SO_2).

Rule 2.23 "Reduced Sulfur Compounds": a. It shall be unlawful for any person to permit the emissions of air contaminants from any premises that will result in ground level concentrations of total reduced sulfur compounds, expressed as hydrogen sulfide, in excess of 0.03 ppm for a period of 60 minutes.

Rule 2.39 "Industrial, Institutional, and Commercial Boilers, Steam Generators, and Process Heaters Oxides of Nitrogen Control Measure" (adopted 1/23/96): The purpose of this rule is to reduce oxides of nitrogen emissions to levels consistent with reasonably available control technology (RACT). Gaseous fired units with a rated heat input capacity greater or equal to 5 million BTU per hour shall demonstrate compliance with the emission limit of 0.084 lbs/MMBtu of heat input or 70 ppmv for oxides of nitrogen.

Regulation 3 – Permits

Rule 3.0 "General Requirements":

a. No person shall cause or permit the construction or modification of any new source of air contaminants without first obtaining an Authority to Construct from the Air Pollution Control Officer so as to comply with applicable regulations and rules and ambient air quality standards of the District.

b. The Control Officer shall not approve such construction or modification unless the applicant demonstrates to the satisfaction of the Air Pollution Control Officer that the new source can be expected to comply with all the applicable state laws and District regulations and rules.

Rule 3.1 "Permits Required" (amended 4/12/94): The permits required are the Authority to Construct and a Title V Permit to Operate issued by the Air Pollution Control Officer under Title V of the Federal Clean Air Act as amended in 1990.

Rule 3.6 "Standards for Authority to Construct (New Source Review) (adopted 09/14/93): The purpose of this rule is to establish preconstruction review requirements for new and modified stationary sources of air pollution for use of BACT, analysis of air quality impacts, and to ensure that the operation of such sources does not interfere with the attainment or maintenance of ambient air quality standards.

1. Best Available Control Technology: An Applicant shall apply BACT to any new emissions unit or modification of an existing emissions unit, which results in an emissions increase and the potential to emit for the emissions unit that equals or exceeds the following amounts:

Pollutant	Pounds Per Day
Reactive organic compounds	25.0
Nitrogen oxides	25.0
Sulfur oxides	80.0
Particulate matter (PM_{10})	80.0
Carbon monoxide	500.0
Lead	3.2
Asbestos	0.03
Beryllium	0.002
Mercury	0.5
Vinyl chloride	5.0
Fluorides	15.0
Sulfuric acid mist	35.0
Hydrogen sulfide	50.0
Total reduced sulfur compounds	50.0
Reduced sulfur compounds	50.0

2. Offset Requirements, General: Offsets shall be required for a new stationary source with a potential to emit, calculated pursuant to Rule 3.6.d.4., of nonattainment pollutants or their precursors equal to or exceeding 25 tons per year. The amount of offsets required shall be at least equal to that portion of the potential to emit that exceeds 25 tons per year.

3. Location of Offsets and Offsets Ratios: Offset ratio and the corresponding distances from the proposed stationary source shall be:

   A. Onsite, at a ratio of 1:1
   B. Within 20 miles, at a ratio of 1.2:1
   C. 20 to 50 miles, at a ratio of 1.5:1
   D. Over 50 miles, at a ratio of 2:1

4. Interpollutant Offsets: The Air Pollution Control Officer may approve interpollutant offsets on a case-by-case basis, provided that the Applicant demonstrates to the satisfaction of the Air Pollution Control Officer, through the use of an impact analysis, that the emission increases from the new or modified source will result in a net air quality benefit and will not cause or contribute to a violation of any air quality standard. In such cases, the Air Pollution Control Officer may, based upon an air quality analysis, impose offset ratios greater than the requirements of this rule.

5. Ambient Air Quality Standards: In no case shall the emissions from the new or modified stationary source cause or make worse the violation of an Ambient Air Quality Standard. An impact analysis shall be used to estimate the effects of a new or modified source. In making this determination, the Air Pollution Control Officer shall take into account the mitigation of emissions through offsets obtained pursuant to this rule.

Table 8.1-35 summarizes the LORS.

8.1.5.10.2 Best Available Control Technology

Federal requirements pertaining to control of pollutants subject to PSD review (i.e., attainment pollutants) were promulgated by U.S. EPA in 40 CFR 42.21 (j). This regulation defines BACT as emission limits "based on the maximum degree of reduction for each pollutant." BACT determinations are made on a case-by-case basis, taking into account energy, environmental, and economic impacts and other costs. Federal requirements pertaining to control of nonattainment pollutants, or Lowest Achievable Emission Rate (LAER), were promulgated by U.S. EPA under 40 CFR 51.165 (a). This regulation defines LAER as the emissions limit based on either (1) the most stringent emission rate contained in a State Implementation Plan, unless the [source] demonstrates the rate is not achievable; or (2) the most stringent emissions limitation that is achieved in practice. The federal LAER does not consider the cost impacts of control.

The CCAPCD defines BACT in Rule 3.6 as the most stringent emission limit or control technology that either:

1. Has been achieved in practice; or
2. Is contained in a State Implementation Plan approved by U.S. EPA unless demonstrated not to be achievable; or
3. Emission limits found by the Air Pollution Control Officer to be feasible and cost-effective for such class or category of sources or specific source.

The primary air emission sources for the proposed project are two parallel power generation trains. Each train consists of one natural-gas-fired "7FA" technology combustion turbine generator (CTG) set and a supplementary-fired heat recovery steam generator (HRSG). The steam produced by the two HRSGs will be combined and sent to a single steam turbine generator (STG). The proposed project will have a nominal rating of approximately 660 MW.

Applicable BACT levels are shown in Table 8.1-34. CCAPCD Rule 3.6 requires the proposed project to apply BACT if the project's emission levels are in excess of the applicability levels shown in the table. The criteria air pollutants to be emitted at the HRSG stacks include NO_X, CO, PM_{10}, SO_2, and POCs. Given these thresholds, BACT will be required for NO_X, POC, PM_{10}, and CO emissions control for the proposed project.

In addition to the power generation train, an auxiliary boiler and two emergency diesel engines will also be air emission sources on the site. The auxiliary boiler will have a heat input of 40 MMBtu/hr and will operate a maximum of 2,400 hours per year. The auxiliary boiler will emit criteria air pollutants at levels below the BACT significant thresholds shown in Table 8.1-34. BACT will be applied to the auxiliary boiler even though the auxiliary boiler does not require BACT. The two emergency diesel engines will operate no more than 50 hours per year and no more than 1 hour per day each. The emergency diesel engines would not emit NO_X or any other pollutant at levels above the BACT significant thresholds shown in Table 8.1-34; therefore, BACT will not apply.

8.1.5.10.2.1 BACT Assessment for CTG/HRSG

The project proposes for NO_X control the use of Dry Low-NO_X (DLN) combustors and SCR with ammonia injection designed to achieve a NO_X emission limit of 2.0 ppmvd (at 15 percent O_2) for a 3-hour average.

Other technologies have either not achieved a NO_X level of 2.0 ppm (at 15 percent O_2) in practice for gas turbines of a similar size to that proposed for the CGS project, or offer equivalent NO_X control efficiency with other less desirable features. Also, the project proposes a CO emission limit of 3.0 ppmvd for a 3-hour average with an oxidation catalyst as a post-combustion control technology. The oxidation catalyst will also reduce VOC emissions. The remainder of this section contains the BACT analysis conducted for the proposed project, and demonstrates that the proposed CTG controls summarized in Table 8.1-35 comply with BACT requirements.

BACT Assessment Methodology

The BACT assessment conducted for the CTGs proposed for the project considered all NO_X and CO control technologies currently proposed or in use on large natural gas–fired combustion turbines (>50 MMBtu/hr heat input). To identify feasible emission limits, several information sources were consulted, including the following:

- U.S. EPA's BACT/LAER Clearinghouse and updates;
- CARB's BACT Clearinghouse database and CARB's BACT Guidelines for Power Plants (adopted 7/22/99);
- South Coast Air Quality Management District (SCAQMD) BACT Guidelines Manual;
- Discussions with permitting staff from U.S. EPA Region IX;
- Recent CEC Applications for Certification; and
- Research conducted by Colusa Generating Station project design engineers.

Table 8.1-36 lists selected recent NO_x BACT determinations for natural-gas-fired combined cycle power projects in California using advanced technology combustion turbines. BACT for the most recent projects that have come on line in the state has been determined to be either 2.0 or 2.5 ppm by volume (ppmvd) (at 15 percent oxygen [O_2]), to be achieved by means of SCR with ammonia injection. All of the five most recent projects to be approved by CEC committed to a NO_x BACT level of 2.0 ppmvd at 15% O_2. The CTG in this project will achieve the BACT concentration of 2.0 ppmvd at 15 percent O_2 using dry low-NO_x combustor technology (rather than steam or water injection, as a means of water conservation), and SCR.

Similarly, the most recent combined cycle turbine projects have been approved with a CO emissions limit between 2 and 6 ppmvd and a ROC emissions limit at or near 2 ppmvd (both at 15 percent O_2), based on the use of an oxidation catalyst. The CTG in this project will employ the same control technology to achieve comparable CO and ROC stack exhaust levels. Exclusive use of natural gas fuel has been determined to be BACT for SO_x and PM_{10} in all other comparable projects for several years.

NO_X Control Technologies

Based on a review of materials described above, the following NO_X control technologies were evaluated to determine whether they are able to achieve BACT NO_X levels in practice:

- DLN and XONON™;
- DLN and Goal Line SCONOx™; and
- DLN and SCR with ammonia injection.

XONON™. The XONON combustion system improves the combustion process by lowering the peak combustion temperature to prevent the formation of NO_X while avoiding the increases in CO and unburned hydrocarbons (UHC) associated with other NO_X control technologies (such as water injection and dry low-NO_x). Most gas turbine emission control technologies remove air contaminants from exhaust gas prior to release to the atmosphere. In contrast, the overall combustion process in the XONON system is a

partial combustion of the fuel in the catalyst module followed by completion of the combustion downstream of the catalyst. In the catalyst module a portion of the fuel is combusted without a flame (i.e., at relatively low temperature) to produce a hot gas. A homogeneous combustion region is located immediately downstream where the remainder of the fuel is combusted.

The key feature of the XONON combustion system is a proprietary catalytic component, called the XONON Module, which is integral to the gas turbine combustor. XONON combusts the fuel without a flame, thus eliminating the peak flame temperatures that lead to NO_X. Turbine performance is not affected.

XONON is an innovative technology that is currently being commercialized on smaller-scale projects with support from the U.S. Department of Energy, California Energy Commission, and the CARB. The CARB has reported on the pilot effort underway in Santa Clara where the XONON system is operating at a 1.5 MW simple-cycle pilot facility. The CARB indicated in their June 1999 Stationary Source Division Report *Guidance for Power Plant Siting and Best Available Control Technology,* page 23 (CARB 1999): "Emission levels from 1.33 to 4.04 ppmvd NO_X at 15 percent oxygen (O_2) have been achieved at Silicon Valley Power utilizing the XONON™ technology." But they further indicate that "there is not sufficient operating experience to ensure reliable performance on large gas turbines."

Because XONON s not currently commercially demonstrated technology for the General Electric Frame 7FA combustion turbine model and it has received very limited trial operation only on much smaller CTG units, XONON is not considered as a viable NO_X emissions control option for CGS.

SCONOx™. SCONOx is a new NO_x reduction system produced by Goal Line Environmental Technologies (now distributed by EmeraChem) for gas turbine applications. This system uses a coated catalyst to oxidize both NO_x and CO, thereby reducing plant emissions of these pollutants. CO emissions are reduced in SCONOx by the oxidation of CO to CO_2. A two-step process reduces the NO_x emissions. First, NO_x emissions are oxidized to NO_2 and then adsorbed onto the catalyst. In the second step, a proprietary regenerative gas is periodically passed through the catalyst. This gas de-desorbs the NO_2 from the catalyst and reduces it to N_2. The system does not use ammonia as a reagent; rather, it uses natural gas as the basis for a proprietary catalyst regeneration process.

As demonstrated by an initial installation on several gas turbines where energy is recovered from the exhaust gas to produce steam, SCONOx is capable of achieving NO_x emission concentrations of 2 ppm based on a maximum inlet concentration of 25 ppm, and 90 percent CO reduction based on a maximum inlet concentration of 50 ppm. However, the effectiveness of the SCONOx technology has not been demonstrated on turbines as large as the GE 7FA turbine proposed for the CGS project.

Vendors of the SCONOx technology have stated that it is commercially ready for turbines of any size. However, the largest turbine that SCONOx has actually been applied to thus far is a GE LM2500, approximately 25 MW in capacity, or about one-fifth the size of the proposed project. The Otay Mesa Power Project (which would have used Frame 7F turbines in a combined cycle configuration) was permitted with a commitment to use the SCONOx technology as the primary NO_x and CO control method if possible, but construction of that project has been postponed for several years. The AFC filed in 2000 for the Nueva Azalea Project also proposed to use the SCONOx technology, but this project was ultimately never built.

SCONOx would not require an oxidizing catalyst or the use of ammonia reagent to control CO and NO_x emissions. The SCONOx technology employs a reactive catalyst that must be regenerated on a regular basis. The catalyst reacts with CO and NO to form CO_2, which is emitted, and NO_2, which is absorbed on the surface of the catalyst until it is saturated. Prior to saturation, the catalyst is regenerated. This is accomplished by sealing off the catalyst from the exhaust stream by means of a pair of mechanical louver

doors and subjecting it to a mixture of natural gas and steam that forms hydrogen to produce elemental nitrogen and CO_2, which are emitted through the stack.

The manufacturer of SCONOx recommends that the catalyst in each module be removed and put through a regenerative bathing process once a year. An on-line catalyst washing system design has not yet been fully developed. There is some concern that the bathing process may result in an additional hazardous waste stream. The time required for this process is not clearly known, but it is likely to be approximately 1 to 2 weeks. Also, there may be a requirement that liquefied natural gas be stored on site for use during the regular regeneration process of the catalyst throughout the year.

For large gas turbines, an assembly of multiple SCONOx modules would be required to control NO_x and CO to 2 ppm each. For example, proposals for installation of the technology on Frame 7F turbine have specified up to 15 such modules, with a capital cost of $26 million (Three Mountain Power Plant, 99-AFC-2). Testing has not yet been conducted to demonstrate the successful operation of the louver doors used by each module under realistic flow and emissions conditions that would be found in large turbines. Also, control algorithms have not yet been developed or tested for controlling large numbers of SCONOx modules. Due to the lack of appropriate testing and information, some HRSG manufacturers have expressed reluctance to issue guarantees for their equipment if SCONOx is installed (Beck, 2000).

Although the SCONOx technology has been demonstrated to be an effective NO_x and CO emission abatement system on a few small combined cycle turbine installations and does not require the use of ammonia reagent, an SCR system has virtually the same NO_x emissions guarantee as the SCONOx at a much lower price, and has been successfully demonstrated extensively on large Frame-type turbines.

Potential advantages of the SCONOx process include:

- **No ammonia.** The SCONOx process does not use ammonia. This eliminates the ammonia storage and transportation safety issues entirely and the potential for ammonia slip or ammonia-based particulate formation.

- **Carbon monoxide reduction.** SCONOx will reduce CO emissions as well as NO_x emissions.

Potential disadvantages of the SCONOx process include:

- **Unproven for large gas turbines.** While demonstrated to be effective on smaller turbines, several aspects of the technology have not been demonstrated for a system configured for a larger turbine.

- **Catalyst "washing."** A proprietary catalyst washing system must be used and an on-line catalyst washing system design has not yet been fully developed. If an on-line catalyst washing system is not used, then the facility must be shut down for cleaning.

- **High capital and operating cost.** SCONOx is significantly more expensive than SCR with ammonia injection, primarily due to the higher cost of initial and replacement catalyst. The SCONOx catalyst is a precious metal catalyst, which is very expensive.

Because the performance of SCONOx has not been sufficiently demonstrated as "achieved in practice" on large combined cycle turbines, as discussed above, SCONOx does not represent BACT for the CGS project at this time.

SCR with Ammonia Injection. SCR with ammonia injection systems for reduction of NO_x emissions have been widely used in combined cycle gas turbine applications for many years and are considered a

proven technology. SCR systems are commercially available from several vendors, unlike SCONOx, which is available from a single vendor. The SCR process involves the injection of ammonia into the flue gas stream via an ammonia injection grid upstream of a catalyst. The ammonia reacts with the NO_x gases in the presence of the catalyst. The catalyst is not regenerated and requires periodic replacement. SCR vendors typically offer a 3-year guarantee on catalyst life. SCR with ammonia injection systems have been used in numerous larger combined cycle applications including 7FA Class units.

Dry Low-NO_x combustion is a system design employed by several major turbine vendors. Virtually all gas turbine manufacturers are continuing to research and improve on these advanced combustion technologies because they represent the most cost-effective NO_X reduction approach. The source of NO_X emissions from natural gas turbines is the thermal NO_X formation reaction, which is very dependent on combustor design. This reaction converts natural atmospheric nitrogen and oxygen to NO_X at the high temperatures of combustion. Dry Low-NO_x combustion results in turbine exhaust NO_X emission rates of 25 ppmvd (at 15 percent O_2) or less.

As noted in Table 8.1-36, for large turbines that are similar in capacity to the CGS turbines, dry low-NO_x and SCR have been permitted at NO_X emissions of 2.0 ppm (at 15 percent O_2). Thus, Dry Low-NO_x with SCR with ammonia injection, designed to achieve a NO_X emission limit of 2.0 ppm (at 15 percent O_2) on a 3-hour average, is considered BACT.

CO Control Technologies

CO emissions from the CTGs/HRSGs will be controlled by the use of post-combustion oxidation catalysts to be located in the HRSGs. The CGS CTGs/HRSGs with CO oxidation catalyst are guaranteed to achieve 3.0 ppm (at 15 percent O_2) on a 3-hour average, except during startup and shutdown. A review of recent BACT determinations in Table 8.1-37 indicates that the CARB BACT guideline CO emission limit of 3 ppmvd (at 15 percent O_2) has been required of recent projects. The proposed BACT limit for the CGS CTGs/HRSGs more than satisfies the BACT requirements. CO oxidizing catalysts have been used with natural gasfired turbines for over a decade. CO catalysts operate at elevated temperatures within the HRSG.

POC and PM_{10} Control Technologies

The proposed CGS BACT level of 2.0 ppmvd (at 15 percent O_2) for VOC control with effective combustion conforms with CARB guidelines. The CGS turbines are not expected to exceed 2.0 ppm VOC when the duct burners are firing. The CGS VOC emissions are consistent with those of other recent projects. PM_{10} emissions will be controlled through the use of clean burning pipeline quality natural gas.

8.1.5.10.2.2 Fugitive Dust Control

Other controls that will be implemented at the CGS site include best achievable control measures (BACM) during construction. Fugitive dust control measures that are stipulated by CCAPCD Rule 2-16 include the following:

- Use, where possible, of water or chemicals for control of dust in the demolition of existing buildings or structures, construction operations, the construction of roadways or the clearing of land; and
- Application of asphalt, oil, water, or suitable chemicals on dirt roads, materials stockpiles, and other surfaces which can give rise to airborne dusts.

The CGS proposes to use the following fugitive dust suppression program to reduce construction-related emissions. These may be considered as mitigations to air pollutant impacts. Fugitive dust emissions are expected to be reduced by 90 percent. The use of chemical additives is not planned.

- Frequent watering of unpaved roads and disturbed areas (at least twice a day).
- Limit speed of vehicles on the construction areas to no more than 10 miles per hour.
- Construction site entrance shall be posted with visible speed limit signs.
- Sweep paved internal roads after the evening peak period.
- Increase frequency of watering when wind speeds exceed 15 miles per hour.
- Employ tire washing and gravel ramps prior to entering a public roadway to limit accumulated mud and dirt deposited on the roads.
- Treat the entrance roadways to the construction site with soil stabilization compounds.
- Place sandbags adjacent to roadways to prevent runoff to public roadways.
- Install windbreaks at the windward sides on construction areas prior to the soil being disturbed. The windbreaks shall remain in place until the soil is stabilized or permanently covered.
- Employ dust sweeping vehicles at least twice a day to sweep at least the first 500 feet of public roadways that are used by construction and worker vehicles.
- Sweep newly paved roads at least twice weekly.
- Replace ground cover in disturbed areas as quickly as possible.
- Cover all trucks hauling dirt, sand, soil or other loose materials and maintain a minimum of 6 inches of freeboard between the top of the load and the top of the trailer.
- Limit on equipment idle times (no more than 15 minutes.)
- Employ electric motors for construction equipment when feasible.
- Apply covers or dust suppressants to soil storage piles and disturbed areas that remain inactive for over 2 weeks.
- Pre-wet the soil to be excavated during construction.
- Designate a person to oversee the implementation of the fugitive dust control program.

8.1.5.10.2.3 Construction Equipment Exhaust Emissions

As further mitigations to air pollutant impacts, to reduce construction-related emissions associated with equipment exhaust, CGS proposes the following program:

- All diesel-fueled engines used for construction of the facility shall be fueled only with ultra-low sulfur diesel which contains no more than 15 ppm sulfur.

- All diesel-fueled engines used in the construction shall have clearly visible tags showing that the engine meets the conditions set forth in this program.

- All construction diesel engines rated at 100 horsepower or above shall meet at least the California Tier 2 Emissions Standards. If a Tier 2 engine is not available, a Tier 1 engine shall be provided. In the case that no Tier 1 engine is available for a particular application, the engine shall be equipped with a catalyzed diesel particulate filter (soot filter), unless the use of a soot filter is certified as not practical by the engine manufacturer.

- All earthmoving equipment and heavy-duty construction related trucks shall be properly maintained and the engines tuned to the manufacturer's specifications.

- Diesel heavy construction equipment shall not remain running at idle for more than 5 minutes, to the extent practical.

8.1.6 Involved Agencies and Agency Contacts

Agency contacts regarding public health assessment of the proposed project are as follows:

Issue	Agency/Address	Contact/Title	Telephone
Air Quality	California Energy Commission 1519 Ninth Street Sacramento, CA 95814	Eileen Allen, Siting Program Manager Keith Golden, Senior Mechanical Engineer	(916) 654-3940
Air Quality	Colusa County Air Pollution Control District 100 Sunrise Blvd. #F Colusa, CA 95932-3246	Harry Krug, Director of Air Quality Standards	(530) 458-0590
Air Quality	U.S. Environmental Protection Agency 75 Hawthorne Street San Francisco, CA 94105	Gerardo Rios, Chief, New Source Review Section Carol Bohnenkamp, Regional Modeler	(415) 744-1500
Air Quality	California Air Resources Board P.O. Box 2815 Sacramento, CA 95812	Michael Tollstrup, Chief, Project Assessment Branch Stationary Source Division	(916) 322-6026
Air Quality	Wintun Environmental Protection Agency P.O. Box 1839 Williams, CA 95987	Kesner Flores, Cortina Rancheria	(530) 473-3318

8.1.7 Permits Required and Permitting Schedule

This section lists the required permits related to air quality for the proposed project. The permits are summarized in the following table.

Responsible Agency	Permit/Approval	Schedule
Colusa County Air Pollution Control District (CCAPCD)	Authority to Construct/Permit to Operate	Application to be filed concurrent with AFC filing. 180-day application review period.
U.S. Environmental Protection Agency	Prevention of Significant Deterioration (PSD) Permit Application	Application to be filed concurrent with AFC filing. 180-day application review period will be requested.

Under Regulation 3, Rule 3-6, CCAPCD regulates the construction, alteration, replacement, and operation of new power plants. The proposed project is required to obtain a preconstruction Determination of Compliance from the CCAPCD. Regulation 3, Rule 3-1 incorporates other CCAPCD rules pertaining to sources that may emit air contaminants through the issuance of air permits (i.e., Authority to Construct and Permit to Operate). This permitting process allows the CCAPCD to adequately review new and modified air pollution sources to ensure compliance with all applicable prohibitory rules and to ensure that appropriate emission controls are used. An Authority to Construct allows for the construction of the air pollution source and remains in effect until the Permit to Operate application is granted, denied, or canceled. For power plants under the siting jurisdiction of the CEC, the CCAPCD issues a Determination of Compliance in lieu of an Authority to Construct. The Determination of Compliance is incorporated into the CEC license. Once the project commences operation and demonstrates compliance with the Determination of Compliance, CCAPCD will issue a Permit to Operate. The Permit to Operate specifies conditions that the air pollution source must meet to comply with other air quality standards and will incorporate applicable Determination of Compliance requirements. The Final Determination of Compliance should be issued within 6 months after receipt of complete applications.

8.1.8 References

Auer, August H. Jr. 1978. American Meteorological Society. Journal of Applied Meteorology, 17(5): 636-643. "Correlation of Land Use and Cover with Meteorological Anomalies", May 1978.

Beck, R.W. 2000. Towantic Energy Project Revised BACT Analysis. February 18.

CARB (California Air Resources Board). 2005. HARP (Hotspots Analysis and Reporting Program), Version 1.1 (Build 23.02.21), April 2005.

CARB (California Air Resources Board). 2003. HARP User Guide – Software for Emission Inventory Database Management, Air Dispersion Modeling Analyses, and Health Risk Assessment version 1.3, Air Resources, Board, California Environmental Protection Agency. December 2003.

CARB (California Air Resources Board). 2002. EMFAC2002 Emission Factor Model, Version 2.2.

CARB Stationary Source Division Report Guidance for Power Plant Siting and BACT – July 22, 1999. CARB Report # 1536, call # TD 888 P6 1999.

CCAPCD (Colusa County Air Pollution Control District). no date. Rules and Regulations, numerous updates and revisions.

CEC (California Energy Commission). 1997. "Regulations Pertaining to the Rules of Practice and Procedure and Plant Site Certification." Title 20, California Code of Regulations. Chapter 1, 2, 5.

IMPROVE (Interagency Monitoring of Protected Visual Environments). 1995. Integrated Report of Optical, Aerosol, and Scene Monitoring Data: Point Reyes National Seashore – March 1993 through February 1994. November.

MRI (Midwest Research Institute). 1996. Improvement of Specific Emission Factors (BACM Project No. 1), Final Report. Prepared by Midwest Research Institute for South Coast AQMD. March 29.

NWS (National Weather Service). 2001. Northern California Climate Summaries — Colusa 2 SSW Station, California. (http://www.wrcc.dri.edu/summary/climsmnca.html)

OEHHA (Office of Environmental Health Hazard Assessment). 2003. Air Toxics Hot Spots Program Risk Assessment Guidelines, August 2003.

Oke, T.R. 1987. Boundary Layer Climates. Methuen, London, New York.

SCAQMD (South Coast Air Quality Management District). 2005. Off-road Mobile Source Emission Factors posted at SCAQMD website (http://www.aqmd.gov/ceqa/handbook/offroad/offroad.html), accessed September 21, 2006.

URS (URS Corporation). 2006. Modeling Protocol for the Colusa Generating Station Project, Colusa County. Prepared by URS for Colusa County Air Pollution Control District, U.S. Environmental Protection Agency and California Energy Commission. July.

URS (URS Corporation). 2001. Application for Certification for Colusa Power Plant Project Colusa County, California. June 2001

U.S. EPA (U.S. Environmental Protection Agency). 2005. "Revision to the Guideline on Air Quality Models: Adoption of a Preferred General Purpose (Flat and Complex Terrain) Dispersion Model and Other Revisions; Final Rule," 40 CFR Part 51, AH-FRL07990-9, November 9, 2005.

U.S. EPA (U.S. Environmental Protection Agency). 2004. User's Guide for the AMS/EPA Regulatory Model – AERMOD. EPA-454/B-03-001. U.S. Environmental Protection Agency, Office of Air Quality Planning and Standards, Emissions Monitoring and Analysis Division, Research Triangle Park, NC. September 2004.

U.S. EPA (U.S. Environmental Protection Agency). 1999. Office of Air Quality Planning and Standards. Monitor Reports, 1999. (http://www.epa.gov/airsdata/monvals.htm)

U.S. EPA (U.S. Environmental Protection Agency). 1995. User's Guide to the Building Profile Input Program (Revised), EPA-454/R-93-038, Office of Air Quality Planning and Standards, U.S. Environmental Protection Agency, Research Triangle Park, North Carolina 27711. February.

U.S. EPA (U.S. Environmental Protection Agency). 1992. Workbook for Plume Visual Impact Screening and Analysis (Revised), EPA-454/R-92-023, Office of Air and Radiation, Office of Air Quality Planning and Standards, U.S. Environmental Protection Agency, Research Triangle Park, North Carolina 27711. October.

U.S. EPA (U.S. Environmental Protection Agency). 1990. New Source Review Workshop Manual Prevention of Significant Deterioration and Nonattainment Area Permitting (Draft), Office of Air Quality Planning and Standards, U.S. Environmental Protection Agency, Research Triangle Park, NC 27711. October 1990.

U.S. EPA (U.S. Environmental Protection Agency). 1985. Guideline for Determination of Good Engineering Stack Height (Technical Support Document for the Stack Height Regulation) (Revised), EPA-450/4-80-023R. Office of Air Quality Planning and Standards, U.S. Environmental Protection Agency, Research Triangle Park, North Carolina 27711. June.

USFS (U.S. Forest Service) et al. (U.S. Forest Service Air Quality Program, the National Park Service Air Resources Division and the U.S. Fish and Wildlife Service Air Quality Branch) 2000. Federal Land Managers Air Quality Related Values Workgroup (FLAG) Phase 1 Report. Prepared by U.S. Forest Service Air Quality Program, National Park Service Air Resources Division, U.S. Fish and Wildlife Service Air Quality Branch. December 2000.

USFS (U.S. Forest Service). 1992. Guidelines for Evaluating Air Pollution Impacts on Class I Wilderness Areas in California, General Technical Report PSW-GTR-136. Pacific Southwest Research Station, Forest Service, U.S. Department of Agriculture, Albany, California. November.

Table 8.1-1
Temperature and Precipitation Data for Colusa 2 SSW Station, Colusa, California

Month	Average Temperatures (°F) [a]			Average Precipitation (inches)
	Low	High	Daily	
January	36.7	53.6	45.2	3.48
February	40.2	60.3	50.3	2.81
March	42.2	65.6	53.9	2.27
April	45.2	73.7	59.5	0.95
May	51.9	81.8	66.9	0.53
June	56.9	89.7	73.3	0.21
July	59	95.2	77.1	0.04
August	57.3	93.7	75.5	0.07
September	54	89.4	71.7	0.28
October	47.8	79	63.4	0.89
November	40.8	64	52.4	2.16
December	36.5	54.2	45.4	2.55
Annual Average	47.4	75	61.2	16.23

Source: NWS, 2001.
Note:
[a]Average temperature and precipitation data represent 1948–2000.

Table 8.1-2
Ambient Ozone Levels at Colusa Region, 1996-2005 (ppm)

	1996	1997	1998	1999	2000	2001	2002	2003	2004	2005
Colusa–Sunrise Boulevard Station, Colusa County										
Maximum 1-Hour Average	0.111	0.093	0.099	0.095	0.092	0.101	0.094	**0.089**	0.084	0.085
Number of Days Exceeding California 1-Hour Standard (0.09 ppm)	5	0	2	1	0	5	0	0	0	0
Number of Days Exceeding Federal 1-Hour Standard (0.12 ppm)	0	0	0	0	0	0	0	0	0	0
Maximum 8-Hour Average	0.091	0.081	0.088	0.085	0.072	0.088	0.081	0.071	0.073	**0.074**
Number of Days Exceeding Federal 8-Hour Standard (0.08 ppm)[a]	3	0	1	1	0	3	0	0	0	0

Source: California Air Resources Board (CARB), 2006, www.arb.ca.gov.
Notes:
[a] Number of days with an 8-hour average exceeding federal standard concentration of 0.08 ppm. Regulatory standard is to maintain 0.08 ppm as a 3-year average of the fourth-highest daily maximum. Therefore, number of days exceeding standard concentration is not the number of violations of the standard for the year.
[1] Maximum average values occurring during the most recent 3 years are indicated in bold.
[2] National standards, other than those for ozone and based on annual averages, are not to be exceeded more than once a year. The ozone standard is attained when the expected number of days per calendar year with maximum hourly average concentrations above the standard is equal to or less than one.
[3] New federal 8-hour ozone and fine particulate matter ($PM_{2.5}$) standards were promulgated by U.S. EPA on July 18, 1997. The federal 1-hour ozone standard was revoked by U.S. EPA on June 15, 2005.

ppm = parts per million

Table 8.1-3
Ambient PM_{10} Levels in the Colusa Region, 1996-2005 ($\mu g/m^3$)

	1996	1997	1998	1999	2000	2001	2002	2003	2004	2005
Colusa–Sunrise Boulevard Station, Colusa County										
Maximum 24-Hour Average	57	57	58	171	48	76	64	69	81	**92**
Annual Geometric Mean	22.1	21.9	16	24.7	18.7	25.2	--	--	--	**25.5**
Annual Arithmetic Mean	26.8	24.5	19.5	33.4	22.7	13.8	14.5	11.5	15.5	**23.8**
Estimated Number of Days Exceeding California 24-Hour Standard (50 $\mu g/m^3$)	18	9	6	60	0	7.1	0	0	0	**25.8**

Source: California Air Resources Board (CARB), 2006, www.arb.ca.gov.
Notes:
Maximum average values occurring during the most recent 3 years are indicated in bold.

-- = Data not available
$\mu g/m^3$ = micrograms per cubic meter
μm = micrometer

Table 8.1-4
Ambient $PM_{2.5}$ Levels in the Colusa Region, 1996-2005 ($\mu g/m^3$)

	1996	1997	1998	1999	2000	2001	2002	2003	2004	2005
Colusa–Sunrise Boulevard Station, Colusa County										
Maximum 24-Hour Average	--	--	37	55	28	36	57	30	45	**47**
Estimated Number of Days Exceeding Federal 24-Hour Standard (35 $\mu g/m^3$)	--	--	0	0	0	0	0	0	0	**0**
1-Year 98th Percentile	--	--	--	--	26	31	--	27	**34**	16
3-Year Average, 98th Percentile[a]	--	--	--	--	--	--	--	--	--	**26**
Annual Arithmetic Mean	--	--	--	--	8	9.6	--	**8**	7.3	7
3-Year Average, Arithmetic Mean[b]	--	--	--	--	--	10	10	10	7	**11**

Source: California Air Resources Board (CARB), 2006, www.arb.ca.gov.
Notes:
[a] The 3-Year Average, 98th Percentile is below the federal AAQS of 35 $\mu g/m^3$.
[b] The 3-Year Average, Arithmetic Mean is below the California AAQS of 12 $\mu g/m^3$
Maximum average values occurring during the most recent 3 years are indicated in bold.
-- = Data not available
$\mu g/m^3$ = micrograms per cubic meter
μm = micrometer

Table 8.1-5
Ambient Carbon Monoxide Levels at Colusa Region, 1996-2005 (ppm)

Averaging Time	1996	1997	1998	1999	2000	2001	2002	2003	2004	2005
Yuba City–Almond Street Station, Sutter County										
Maximum 1-Hour Average [a]	7.7	6.1	7.3	7.2	5.8	6.9	4.7	3.2	**5.8**	4.4
Maximum 8-Hour Average [b]	4.66	4.08	4.86	4.37	3.6	3.94	3.45	2.36	2.54	**3.39**

Source: California Air Resources Board (CARB), 2006, www.arb.ca.gov.
Notes:
Maximum average values occurring during the most recent 3 years are indicated in bold.
[a] All 1-hour concentrations are below the federal and California CO ambient air quality standards of 35 ppm and 20 ppm, respectively.
[b] All 8-hour concentrations are below the federal and California CO ambient air quality standard of 9 ppm.
ppm = parts per million

Table 8.1-6
Ambient Nitrogen Dioxide Levels at Colusa Region, 1996-2005 (ppm)

Averaging Time	1996	1997	1998	1999	2000	2001	2002	2003	2004	2005
Yuba City–Almond Street Station, Sutter County										
Maximum 1-Hour Average [a]	0.068	0.073	0.074	0.085	0.072	0.079	0.068	**0.080**	0.066	0.062
Annual Average [b]	0.012	0.014	0.013	0.014	0.013	0.014	0.015	**0.014**	0.012	0.012

Source: California Air Resources Board (CARB), 2006, www.arb.ca.gov.
Notes:
Maximum average values occurring during the most recent 3 years are indicated in bold.
Arithmetic average 1-hour for 2004 – 2005 period equals 0.064 ppm.
[a] All 1-hour concentrations are below the California NO_2 ambient air quality standard of 0.25 ppm.
[b] All annual average concentrations are below the federal NO_2 ambient air quality standard of 0.053 ppm.
ppm = parts per million.

Table 8.1-7
Ambient Sulfur Dioxide Levels at Colusa Region, 1996-2005 (ppm)

Averaging Time	1996	1997	1998	1999	2000	2001	2002	2003	2004	2005
Sacramento–Del Paso Manor Station, Sacramento County										
Maximum 1-Hour Average [a]	0.013	0.015	--	--	--	0.023	0.007	**0.006**	0.005	0.003
Maximum 24-Hour Average [b]	0.006	0.006	0.018	0.014	0.008	0.017	0.005	**0.003**	0.003	0.003
Annual Average [c]	0.002	0.002	0.003	0.004	0.005	0.002	0.001	**0.001**	0.001	0.001

Source: California Air Resources Board (CARB), 2006, www.arb.ca.gov.
Notes:
Maximum average values occurring during the most recent 3 years are indicated in bold.
[a] All 1-hour average concentrations are below the California SO_2 ambient air quality standard of 0.5 ppm (1,300 $\mu g/m^3$)
[b] All 24-hour average concentrations are below the California SO_2 ambient air quality standard of 0.04 ppm (105 $\mu g/m^3$) and the federal ambient air quality standard of 0.14 ppm (365 $\mu g/m^3$).
[c] All annual average concentrations are below the federal SO_2 ambient air quality standard of 0.03 ppm (80 $\mu g/m^3$).
-- = Data not available
$\mu g/m^3$ = micrograms per cubic meter
ppm = parts per million

Table 8.1-8
Estimated Number of Pieces of Construction Equipment and Schedule
(Page 1 of 2)

Construction Equipment	Average Hours per Day	Average Units On Site Per Month																								Total Months
		1	2	3	4	5	6	7	8	9	10	11	12	13	14	15	16	17	18	19	20	21	22	23	24	
Excavator Loader	7	1	3	3	3	2	2	1	1	1	1	1	1													20
Excavator Backhoe	7	1	3	3	3	2	2	1	1	1	1	1	1													20
Dozer Tractor Crawler	7	3	3	3																						9
Front End Loader	7				1	1	1	1	1	1	1	1	1	1	1	1	1									13
Trenching Machine	6	1	2	2	1																					6
Excavator Motor Grader	7	1	1	1																						3
Vibrating Plate Compactor	6	1	2	2	2	2	3	3	3	3	3	3	2	1	1	1	1	1								34
Roller Vibrator	6	1	1	1	1	1	2	2	2	2	1	1	1	1												17
Water Truck	6	1	1	1	1	1	1	1	1	1	1	1	1	1	1	1	1	1								17
Concrete Mixer	3		1	1	1	1	1	1	1	1	1	1	1	1	1	1	1	1								16
Concrete Pump, trailer mount	3				1	1	1	1	1	1	1	1														8
Mortar Mixer	4			1	1	2	2	2	2	2	2	1	1	1		1										18
Paving Machine	5	1	1															1	1	1						5
Dump Truck	7	6	3	3	1	2	2	2	2	2	2	2	2	2	2	2	2	1	1	1	1	1	1	1	1	47
Crane (6-ton)	7		1	1	1	1	1	1	1	1	1	1	1	1	1	1	1	1	1							17
Crane (20-ton)	7	1	2	2	2	2	2	3	3	3	3	3	3	2	2	2	1									36
Crane (50-ton)	7	1	2	2	2	3	3	3	3	4	4	4	3	3	2	2	1	1								43
Crane (100-ton)	7					1	1	1	1	1	1	1	1	1	1	1										11

Table 8.1-8
Estimated Number of Pieces of Construction Equipment and Schedule
(Page 2 of 2)

Construction Equipment	Average Hours per Day	Average Units On Site Per Month																								Total Months
		1	2	3	4	5	6	7	8	9	10	11	12	13	14	15	16	17	18	19	20	21	22	23	24	
Crane (300-ton)	8							1	1	1	1	1	1													6
Crane (360-ton)	8							1	1	1	1	1	1													6
Crane (500-ton)	8							1	1	1	1															4
Manlift, telescoping	4				1	1	2	2	2	2	2	2	2	2	1	2	1	1	1	1	1	1	1	1	1	30
Welder (250 amp)	6		1	1	2	2	2	3	4	4	4	3	3	2	2	2	2	2	1	1						41
Air Compressor (185 cfm)	8	1	1	1	1	1	1	1	1	1	1	1	1	1	1	1	1	1	1	1	1					20
Air Compressor (750 cfm)	8					1	2	2	2	2	2	2	1	1	1	1	1	1	1							20
Generator (6 kW)	8	1	1	1	1	2	2	2	2	2	2	2	2	2	2	2	2	2								30
Forklift (2-ton)	6	1	1	1	1	1	1	2	2	2	1	1	1	1	1	1	1	1	1	1	1	1	1	1	1	27
Forklift (4-ton)	6			1	1	2	2	2	2	2	2	2	2	2	2	2	2									26
Fuel/Lube Truck	4	1	1	1	1	1	1	1	1	1	1	1	1	1	1	1	1	1	1	1	1	1	1	1	1	24
Pickup Truck (1/2-ton)	5	3	3	3	3	3	5	5	5	5	5	5	5	5	5	5	5	5	4	4	3	2	2	2	2	94
Stakebed Truck	6	1	1	1	1	1	1	1	1	1	1	1	1	1	1	1	1	1	1							18
Hydraulic Boom Truck	4		1	1	1	1	1	1	1	1		1	1	1	1	1	1	1	1	1						17
Concrete Trowel	3	1	1	2	2	2	2	2	2	1	1	1														17
Concrete Floor Saw	2					1	1	1	1	1	1	1	1	1	1	1	1									12
Bobcat Skip Loader	6	1	1	2	2	2	2	2	2	2	2	2	2	2	2	2	2	2								32
Hydrotest Pump	3															1	1	1	1							4

Note: Above estimates are for a single shift and five 10-hour-day work week.

Table 8.1-9
Controlled Fugitive Dust as PM_{10} Emissions from Earth Moving

Fugitive Dust Source	PM_{10} Emissions Pounds Per Month		
	Month 1	Month 2	Month 3
Loading of Dump Trucks with Excavated Material	420.9	210.4	210.4
Unloading of Dump Trucks	22.8	11.4	11.4
Transportation of Earth on Unpaved Roads	766.9	383.5	383.5
Dirt Pushing and Bulldozing	224.6	224.6	224.6
Total	1,435.2	829.9	829.9

Note:
Worst 1-hour would be 7.2 lb/hr

Table 8.1-10
Estimated Criteria Pollutant Emissions From Construction Equipment Exhaust

	NO_X	CO	VOC	SO_X	PM_{10}
Worst-Case Monthly Emissions (lbs/month)	5,797.2	3,567.3	892.7	6.1	464.4
Worst-Case Hourly Emissions (lbs/hr)[a]	29.9	17.8	4.5	0.03	2.3
Worst-Case Annual Emissions (lbs/yr)[b]	59,018.7	36,310.2	8,968.1	65.4	4806.8

Notes:
[a] Worst-case hourly emissions were estimated by dividing worst-case monthly emissions by 200 hours (20 days of 10 hours each). Total emissions were based on projected daily hours of equipment operation in a given month. Daily average hours of operation are shown in Appendix G.
[b] Worst-case annual emissions were estimated by summing emissions for each 12-month period (i.e., months 1 to 12, 2 to 13, etc.) during the 24-month construction period and taking the maximum emissions for the worst 12-month period (i.e., month 1 to 12 for CO, VOC, SO_X, PM_{10}, and NO_X).

Table 8.1-11
Estimated Peak PM_{10} Emissions During Construction

Emissions Estimate Scenario	Fugitive Dust PM_{10} Peak	Exhaust PM_{10} (during fugitive dust peak)[a]	Total PM_{10} Combined Peak
Worst-Case Monthly Emissions (lbs/month)	3,056.6	349.3	3,405.9
Worst-Case Hourly Emissions (lbs/hr)[b]	15.2	1.8	17
Worst-Case Hourly Emissions (lbs/day)[b]	152.8	17.5	170.3
Worst-Case Annual Emissions (lbs/yr)[c]	14,577.1	4,806.8	19,338.9

Notes:
[a] Exhaust PM_{10} peak month shown in Table 8.1-8 above does not occur in same month as Fugitive Dust Emissions peak month.
[b] Worst-case hourly emissions were estimated by dividing worst-case monthly emissions by 200 hours (20 days of 10 hours each). Total emissions were based on projected daily hours of equipment operation in a given month. Daily average hours of operation are shown in Appendix G.
[c] Worst-case annual emissions were estimated by summing emissions for each 12-month period (i.e., months 1 to 12, 2 to 13, etc.) during the 24-month construction period and taking the maximum emissions for the worst 12-month period.

Table 8.1-12
Estimated Criteria Pollutant Emissions From Vehicle Trips During Construction

Vehicle Type	One-Way Trips	NO_X	CO	VOC	SO_X	PM_{10}
Peak Emissions		**Pounds Per Day**				
Construction Employee Cars	223	2.4	27.2	3.0	<0.1	0.2
Construction Employee Trucks	223	4.4	42.2	4.1	<0.1	0.2
Delivery Trucks	16	4.9	3.3	0.4	<0.1	0.1
Total	**462**	**11.7**	**72.7**	**7.5**	**<0.1**	**0.4**
Average Emissions		**Pounds Per Day**				
Construction Employee Cars	99	1.1	12.2	1.3	<0.1	0.1
Construction Employee Trucks	100	2.0	18.8	1.8	<0.1	0.1
Delivery Trucks	15	4.6	3.1	0.4	<0.1	0.1
Total	**214**	**7.6**	**34.1**	**3.5**	**<0.1**	**0.2**

Notes:
Vehicle type and number of trips taken from Table 8.10-10.
Vehicle emissions within 10 miles of the project site included.
EMFAC 2002 Datum, Analysis Year 2007
EMFAC output shown in Appendix G.
Numbers may not add due to rounding.

Table 8.1-13
Estimated Criteria Pollutant Emissions From Vehicle Trips During Operation

Vehicle Type	One-Way Trips	NO_X	CO	VOC	SO_X	PM_{10}
Peak Hour Emissions		**Pounds Per Hour**				
Employee Cars	9	0.1	0.8	0.1	<0.1	<0.1
Employee Trucks	9	0.1	1.4	0.1	<0.1	<0.1
Delivery Trucks	1	0.3	0.2	0.0	<0.1	<0.1
Total	**19**	**0.5**	**2.4**	**0.2**	**<0.1**	**<0.1**
Average Daily Emissions		**Pounds Per Day**				
Employee Cars	15	0.1	1.5	0.2	<0.1	<0.1
Employee Trucks	16	0.3	2.4	0.2	<0.1	<0.1
Delivery Trucks	3	0.8	0.5	0.1	<0.1	<0.1
Total	**34**	**1.1**	**4.3**	**0.4**	**<0.1**	**<0.1**

Notes:
Vehicle type and number of trips taken from Table 8.10-10.
Vehicle emissions within 10 miles of the project site included.
EMFAC 2002 Datum, Analysis Year 2009
EMFAC output shown in Appendix G.
Numbers may not add due to rounding.

Table 8.1-14
Estimated Criteria Pollutant Emission Rates for the Colusa Generating Station Project Turbines and SCR with Ammonia Injection During Normal Operation (pounds per hour for two turbines)

Load	Pollutant	Ambient Temperature		
		18°F	59°F	114°F
100%	VOC	6.8	6.2	6.0
	Ammonia Slip	28.4	26.2	25.0
	CO	28.0	26.0	24.6
	NO_X	30.6	28.4	27.0
	SO_2	2.4	2.2	2.2
	PM_{10}	25.8	25.6	25.6
75%	VOC	5.4	5.0	5.0
	Ammonia Slip	22.8	21.2	20.4
	CO	22.6	21.0	20.0
	NO_X	24.6	23.0	22.0
	SO_2	2.0	1.8	1.8
	PM_{10}	25.4	25.4	25.2
50%	VOC	4.4	4.2	4.2
	Ammonia Slip	18.0	16.8	15.8
	CO	17.8	16.6	15.6
	NO_X	19.4	18.2	17.2
	SO_2	1.6	1.4	1.4
	PM_{10}	25.2	25.0	25.0
100% with Duct Burners	VOC	14.4	13.6	13.2
	Ammonia Slip	38.4	36.4	35.2
	CO	37.8	35.8	34.8
	NO_X	41.4	39.2	38.0
	SO_2	3.2	3.0	3.0
	PM_{10}	40	39.8	40.2

Table 8.1-15
Expected Criteria Pollutant Emission Rates for the Colusa Generating Station Project Turbines During Startup and Shutdown (for each turbine)

	Cold Startup		Warm Startup		Hot Startup		Shutdown	
	270 Minutes		180 Minutes		90 Minutes		30 Minutes	
Pollutant	Max lb/hr	Total lb/270 min	Max lb/hr	Total lb/180 min	Max lb/hr	Total lb/90 min	Max lb/hr	Total lb/30 min
NO_X	333.3	779.10	152.00	456.20	249.90	259.90	115.00	115.00
CO	373.60	1355.60	370.30	790.50	429.60	679.60	483.50	483.50
VOC	27.7	106.70	27.7	47.40	27.7	38.00	23.9	23.90
SO_2	0.40	1.01	0.40	0.58	0.40	0.33	0.20	0.20
PM_{10}	12.00	48.80	12.00	30.80	12.00	12.80	6.00	6.00

Table 8.1-16
Estimated Criteria Pollutant Annual Emissions for the Turbines

Pollutant	1st Quarter Emissions (tons)[a]	2nd Quarter Emissions (tons)[a]	3rd Quarter Emissions (tons)[a]	4th Quarter Emissions (tons)[a]	Annual Emissions (tons)[a]
NO_X	45.1	43.1	50.9	43.8	182.9
CO	53.4	51.6	106.3	53.1	264.4
VOC	12.3	11.6	11.8	11.7	47.4
PM_{10}	35.1	35.2	35.4	35.5	141.2
SO_2	3	2.8	2.6	2.8	11.2

Notes:
[a] Includes emissions from two turbines. See Appendix G for details.

Table 8.1-17 Estimated Worst-Case Short-Term Emission (per turbine)	
1-Hour Emissions (lbs/hr)	
NO_X	333.30
CO	483.50
VOC	27.7
PM_{10}	20.1
SO_2	1.60
3-Hour Emissions (lbs/3-hr)	
SO_2	4.80
8-Hour Emissions (lbs/8-hr)	
CO	1,896
24-Hour Emissions (lbs/day)	
NO_X	1,497.30
CO	3,829.50
VOC	315.30
PM_{10}	482.4
SO_2	38.4
Normal operation excluding commissioning	

Table 8.1-18
Estimated Criteria Pollutant Emissions from Gas Turbine Commissioning

	VOC	CO	NO_x	SO_x	PM_{10}
Worst-Case Commissioning Emissions (lbs/hr/ct)[a]	7.2	<950	<500	1.60	20.1
Total Commissioning Period Emissions (tons/ct)[b]	6.75	152	48.5	0.6	7

Notes:
[a] Worst-case hourly emissions for VOC, SO_x, and PM_{10} from Table 8.1-14 adjusted to reflect one turbine. CO and NO_x emission rates stated equal worst-case hourly emissions which will not be exceeded during commissioning.
[b] Worst-case commissioning period emissions estimated by design engineer.

Table 8.1-19
Auxiliary Boiler Emissions

Pollutant[a]	Emission Factor (lb/MMBtu)	Emissions	
		lb/hr	ton/yr[b]
NO_X	0.0108	0.48	0.57
CO	0.037	1.63	1.95
PM_{10}	0.005	0.18	0.26
SO_2	0.0006	0.03	0.03
VOC	0.004	0.18	0.21

Notes:
[a] NO_X emissions are based on 7 ppm @ 3% O_2 dry. Emissions based on vendor information.
[b] Annual emissions based on 2,400 hours of operation.

Table 8.1-20
Non-Emergency Emissions for Generator and Firewater Pump Engine

	Generator	Firewater Pump
Estimated brake horsepower	1,340	160
Hourly Emissions (pounds per hour)		
NO_X	13.88	1.73
CO	0.32	0.19
VOC	0.15	<0.01
PM_{10}	0.01	<0.00
SO_2	0.09	0.05
Annual Emissions (tons per year)		
NO_X	0.347	0.043 [a]
CO	0.008	0.005
VOC	0.004	0.000 [a]
PM_{10}	0.000	<0.001
SO_2	0.002	0.001

kw = kilowatts
Basis: Manufacturers emissions data, 15 ppm sulfur diesel fuel, Annual emissions based on a maximum of 50 non-emergency hours per year of operation.
[a] NO_X and VOC are combined and reported as NO_X

Table 8.1-21
Quarterly and Annual Estimated Emissions From CGS

Pollutant	1st Quarter Emissions (tons)	2nd Quarter Emissions (tons)	3rd Quarter Emissions (tons)	4th Quarter Emissions (tons)	Annual Emissions (tons)
NO_X	45.77	43.77	51.57	44.47	185.58
CO	55.35	53.55	108.25	55.05	272.20
VOC	12.51	11.81	12.01	11.91	48.24
PM_{10}	35.36	35.46	35.66	35.76	142.24
SO_2	3.03	2.83	2.63	2.83	11.32

Notes:
Includes emissions from two turbines, duct burners, auxiliary boiler, and emergency generator and emergency firewater pump engines.

Table 8.1-22
Modeled Construction Emissions Release Parameters for the Proposed Project

Equipment Exhaust Emissions Source	Stack Characteristics (for the Construction Zone)		
	Release Height (m)	Horizontal Dimension (m)	Vertical Dimension (m)
Volume 1	10	58.14	2.326
Volume 2	10	37.21	2.326
Fugitive Dust Areas	**Release Height (m)**	**East-West Distance (m)**	**North-South Distance (m)**
Fugitive Dust Area 1	3	240	240
Fugitive Dust Area 1	3	150	150

Table 8.1-23
Turbine Impact Screening Results

	Winter Minimum (18 °F)				Yearly Average (59 °F)				Summer Maximum (114 °F)			
CTG Load	**100%**	**100%**	**75%**	**50%**	**100%**	**100%**	**75%**	**50%**	**100%**	**100%**	**75%**	**50%**
Duct Burner Status	On	Off	Off	Off	On	Off	Off	Off	On	Off	Off	Off
Stack Velocity (ft/sec)	68.6	71	55.1	44.3	63.7	66	52.3	42.8	63.1	63.7	51.5	42
Stack Temperature (°F)	162	193	181	175	161	193	181	175	186	202	188	167
AERMOD Results [μg/mg^3]/[g/s]												
1-hour	14.54	12.46	15.29	22.37	15.38	12.69	16.62	23.24	13.61	12.65	15.85	**25.21**
3-hour	7.92	5.87	8.48	10.22	8.58	6.37	8.88	10.52	7.10	6.21	8.63	**11.37**
8-hour	4.70	4.46	5.26	7.63	5.29	4.58	5.70	7.98	4.67	4.55	5.44	**8.80**
24-hour	1.55	1.43	1.76	2.43	1.69	1.46	1.84	2.54	1.51	1.46	1.81	**2.80**
Annual	0.22	0.17	0.25	0.33	0.25	0.19	0.26	0.34	0.21	0.18	0.25	**0.37**

Bolded screening results represent maximum.
Note:
g/s = grams per second
μg/mg^3 = micrograms per cubic milligram

Table 8.1-24
Proposed Colusa Generating Station Project AERMOD Modeling Results

Pollutant	Averaging Period	Maximum Modeled Impact ($\mu g/m^3$)	PSD Significant Impact Level[a] ($\mu g/m^3$)	Background[b] ($\mu g/m^3$)	Total Predicted Concentration ($\mu g/m^3$)	AAQS ($\mu g/m^3$)	UTM Coordinates East (m)	UTM Coordinates North (m)
Construction Impacts								
CO	1-hour	1,224	NA	6,444	7,668	23,000	562,750	4,357,230
	8-hour	317.2	NA	3768	4085.2	10,000	562,100	4,357,800
NO_2	1-hour[c]	203.3	NA	120.3	343.6	470	562,750	4,357,230
	Annual[c]	8.3	NA	26.3	34.6	100	562,750	4,357,621
PM_{10}	24-hour	200.5	NA	92	292.5	50	562,799	4,357,940
	Annual	11.6	NA	25.5	37.1	30	563,084	4,357,131
SO_2	1-hour	2.06	NA	15.6	17.7	655	562,750	4,357,230
	3-hour[d]	0.8	NA	15.6	16.4	1,300	562,000	4,357,700
	24-hour	0.08	NA	7.8	7.9	105	562,799	4,357,940
	Annual	0.01	NA	2.6	2.6	80	562,750	4,357,621
Routine Plant Operation Impacts								
CO	1-hour	1,396	2,000	6,444	7,840	23,000	558,375	4,359,450
	8-hour	293	500	3768	4061	10,000	558,325	4,359,325
NO_2	1-hour[c]	336.5	NA	120.3	456.8	470	558,800	4,353,925
	Annual[d]	0.64	1	26.3	27.0	100	562,750.2	4,357,572
PM_{10}	24-hour	4.35	5	92	96.3	50	562,600	4,357,800
	Annual	0.5	1	25.5	26.0	30	562,425	4,358,075
SO_2	1-hour	4.4	NA	15.6	20.0	655	558,350	4,359,500
	3-hour[d]	1.85	NA	15.6	17.4	1,300	559,025	4,355,700
	24-hour	0.35	NA	7.8	8.1	105	562,600	4,357,800
	Annual	0.04	NA	2.6	2.6	80	562,425	4,358,075

Notes:
[a] Source: 40 CFR 52.21.
[b] Background represents the maximum value measured at various air monitoring stations around the CGS site, 2003-2005 (except for 1-hour NO_2 which uses the arithmetic average of 2004-2005 measurements).
[c] Results used OLM to estimate NO_2 impacts.
[d] Background 3-hour SO_2 not reported, used 1-hr background

AAQS = Most stringent ambient air quality standard for the averaging period
NA = Not applicable
NR = Not reported
m = meters
OLM = ozone limiting method
$\mu g/m^3$ = micrograms per cubic meter
CO = carbon monoxide
NO_2 = nitrogen dioxide
PM_{10} = particulate matter less than or equal to 10 microns in diameter
SO_2 = sulfur dioxide

Table 8.1-25
Proposed Project Operations Fumigation Impact Summary

Pollutant	Source	Inversion Impact ($\mu g/m^3$)	Distance to Max. Impact (m)
NO_2 1 hour	Normal Operation Turbine	3.09	15,953
NO_2 1 hour	Turbine Startup	52.45	15,953
CO 1 hour	Normal Operation Turbine	76.09	15,953
CO 1 hour	Turbine Startup	2.82	15,953
SO_2 1 hour	Turbine – Normal Operations or Startup	0.25	15,953
SO_2 3 hour	Turbine – Normal Operations or Startup	0.25	15,953

Notes: 1-hr SCREEN3 results multiplied by 0.9 to convert to 3-hour and 0.7 to convert to 8-hour.
$\mu g/m^3$ = micrograms per cubic meter

Table 8.1-26
Predicted Class I Area
Pollutant Concentrations from the CGS Compared to Proposed and Adopted Significant Impact Levels
($\mu g/m^3$)

Class I and Other Areas of Interest	Maximum Predicted Concentration					
	NO_2[a]	PM_{10}		SO_2		
	Annual Average	24-Hour Average	Annual Average	3-Hour Average	24-Hour Average	Annual Average
USEPA Proposed SIL[b]	0.1	0.3	0.2	1	0.2	0.1
FLM Recommended SIL[b]	0.03	0.27	0.08	0.48	0.07	0.03
Class I Area PSD Increment[c]	2.5	8	4	25	5	2
CGS Maximum Impact	0.008	0.198	0.018	0.031	0.009	0.001

Notes:
a NO was conservatively assumed to be 100 percent converted to NO_2.
b SIL = Significant Impact Level; USEPA proposed and FLM recommended from the Federal Register, Vol. 61, No. 142, p. 38292, July 23, 1996.
c PSD = Adopted Prevention of Significant Deterioration level; from 40 CFR 52.21(c)
d $\mu g/m^3$ = micrograms per cubic meter

Table 8.1-27
Maximum Modeled Soil and Vegetation Impacts of the Proposed Project

Pollutant	USFS Significance Level	Maximum Project Impact
SO_2 Annual	8 ppbv	0.0004 ppbv (0.001 μg/m^3)
SO_2 Hourly	40 ppbv	0.012 ppbv (0.031 μg/m^3)
NO_2 Annual	15 ppbv	0.0043 ppbv (0.008 μg/m^3)
Total Sulfur Deposition	0.005 kg/ha-yr[a]	0.00025 kg/ha-yr
Total Nitrogen Deposition	0.005 kg/ha-yr[a]	0.0017 kg/ha-yr

Notes:
[a] Deposition Analysis Threshold (DAT) for individual sources established by the National Park Service (NPS).
kg/ha-yr = kilograms per hectare per year ppbv = parts per billion, by volume
mg/m$_3$ = micrograms per cubic meter USFS = U.S. Forest Service

Table 8.1-28
Cumulative Impact AERMOD Modeling Results

Pollutant	Averaging Period	CGS Maximum Modeled Impact (μg/m^3)	Contribution of Delevan Compressor Station (μg/m^3)	Background[a] (μg/m^3)	Total Predicted Concentration (μg/m^3)	AAQS (μg/m^3)
NO_2	1-hour	336.5	36.8	120.3	465.6	470
	Annual	0.64	0.66	26.3	27.6	100
PM_{10}	24-hour	4.35	0.45	92	96.8	50
	Annual	0.5	<0.02	25.5	26.0	30

Notes:
[a] Background represents the maximum value measured at various air monitoring stations around the CGS site, 2003-2005 (except for 1-hour NO_2 which uses the arithmetic average of 2004-2005 measurements).
Cumulative impacts for CO and SO_2 did not exceed impacts from CGS alone that are presented in Table 8.1-24.

Table 8.1-29
Applicable Air Quality Laws, Ordinances, Regulations, and Standards
(Page 1 of 3)

Laws, Ordinances, Regulations, and Standards	Administering Agency	Applicability	AFC Section
Federal			
Federal CAAA of 1990; 40 CFR 50	U.S. EPA Region IX, CARB, CCAPCD	National Ambient Air Quality Standards	8.1.4.1
40 CFR 52.21	U.S. EPA Region IX, CARB	PSD Requirements	8.1.4.2
40 CFR 72, 73, 75	U.S. EPA Region IX	Acid rain requirements, SO_2 allowances	8.1.4.3
40 CFR 60, Subpart KKKK	CCAPCD	New Source Performance Standards (NSPS); 0.0015 by volume (15 ppmv) for NO_X and 0.015% by volume (150 ppmv) for SO_2	8.1.4.4
40 CFR 70	CCAPCD	Federally Mandated Operating Permit (Title V) for major sources	8.1.4.5
State			
California Administrative Code, Title 14, §15002(a)(3), CEQA Guideline	CEC	Power plant sitting requirements	8.1.4.6
H&S Code § 44300	CCAPCD	Air toxics "Hot Spots" emission inventory	8.1.4.7
Local			
Regulation 1, Rule 1.8	CCAPCD	Requires to install, use and maintain monitoring equipment	8.1.4.10.1
Regulation 1, Rule 1.9	CCAPCD	Submittal of records and reports to the Air Pollution Control Officer	8.1.4.10.1
Regulation 1, Rule 1.10	CCAPCD	Tests procedures	8.1.4.10.1
Regulation 1, Rule 1.11	CCAPCD	Field inspection	8.1.4.10.1
Regulation 1, Rule 1.12	CCAPCD	Air pollution equipment, scheduled maintenance	8.1.4.10.1

Table 8.1-29
Applicable Air Quality Laws, Ordinances, Regulations, and Standards
(Page 2 of 3)

Laws, Ordinances, Regulations, and Standards	Administering Agency	Applicability	AFC Section
Regulation 1, Rule 1.13	CCAPCD	Notification of equipment breakdown	8.1.4.10.1
Regulation 2, Rule 2.10	CCAPCD	Nuisance; prohibits discharge of emissions which cause injury, illness, detriment, nuisance, etc., to any considerable number of persons or to the public	8.1.4.10.1
Regulation 2, Rule 2.13	CCAPCD	Visibility; prohibits visible emissions as dark or darker than No. 2 on the Ringelmann chart	8.1.4.10.1
Regulation 2, Rule 2.15	CCAPCD	Particulate matter emission limit of 0.3 grain per cubic foot of gas at dry standard conditions	8.1.4.10.1
Regulation 2, Rule 2.16	CCAPCD	Fugitive dust; prohibits the emission of fugitive dust from being airborne beyond the project's property line during construction activities	8.1.4.10.1
Regulation 2, Rule 2.17	CCAPCD	Separation of emissions; air contaminants from a single source operation emitted through two or more emission points cannot exceed the allowable emission through a single emission point	8.1.4.10.1
Regulation 2, Rule 2.18	CCAPCD	Combination of emissions; air contaminants from two or more source operations that are combined prior to emission shall be separated if possible, the prohibitions applying to each source separately	8.1.4.10.1
Regulation 2, Rule 2.22	CCAPCD	Sulfur oxides; prohibits discharging from any single source more than 2,000 ppm of sulfur oxides	8.1.4.10.1
Regulation 2, Rule 2.23	CCAPCD	Reduced sulfur compounds; prohibits emissions which would result in more than 0.03 ppm of ground-level concentration of total reduced sulfur compounds (as H_2S) for a period of 60 minutes	8.1.4.10.1

Table 8.1-29
Applicable Air Quality Laws, Ordinances, Regulations, and Standards
(Page 3 of 3)

Laws, Ordinances, Regulations, and Standards	Administering Agency	Applicability	AFC Section
Regulation 2, Rule 2.39	CCAPCD	Steam generators NO_x control measure; RACT limit of 0.084 lbs/MMBTU or 70 ppmv for NO_x	8.1.4.10.1
Regulation 3, Rule 3.1	CCAPCD	Authority to Construct and Permit to Operate.	8.1.4.10.1
Regulation 3, Rule 3.6	CCAPCD	New Source Review.	8.1.4.10.1

Table 8.1-30
Relevant Federal and California Ambient Air Quality Standards

Pollutant	Averaging Time	California AAQS[a,b]	Federal AAQS[b,c]	
			Primary	Secondary
Ozone (O_3)	1-hour	0.09 ppm (180 μg/m^3)	0.12 ppm (235 μg/m^3)	Same as primary standard
	8-hour[d]	0.07 ppm (137 μg/m^3)	0.08 ppm (157 μg/m^3)	
Carbon Monoxide (CO)	8-hour	9 ppm (10 mg/m^3)	9 ppm (10 mg/m^3)	NA
	1-hour	20 ppm (23 mg/m^3)	35 ppm (40 mg/m^3)	
Nitrogen Dioxide (NO_2)[e]	Annual (Arithmetic Mean)	NA	0.053 ppm (100 μg/m^3)	Same as primary standard
	1-hour	0.25 ppm (470 μg/m^3)	NA	
Sulfur Dioxide (SO_2)	Annual (Arithmetic Mean)	NA	0.03 ppm (80 μg/m^3)	NA
	24-hour	0.04 ppm[f] (105 μg/m^3)	0.14 ppm (365 μg/m^3)	NA
	3-hour	NA	NA	0.05 ppm (1,300 μg/m^3)
	1-hour	0.25 ppm (655 μg/m^3)	NA	NA
Respirable Particulate Matter (PM_{10})	Annual (Geometric Mean)	20 μg/m^3 [h]	NA [h]	Same as primary standard
	24-hour	50 μg/m^3	150 μg/m^3	
	Annual (Arithmetic Mean)	NA	NA	
Fine Particulate Matter ($PM_{2.5}$)[d]	24-hour	NA	35 μg/m^3 [h]	Same as primary standard
	Annual (Arithmetic Mean)	12 μg/m^3 [h]	15 μg/m^3	
Visibility Reducing Particles	1 observation	See footnote g.	No federal standard	No federal standard

Notes:

[a] Title 17, California Code of Regulations, California AAQS for ozone (as volatile organic compounds), carbon monoxide, sulfur dioxide (1-hour), nitrogen dioxide, and particulate matter (PM_{10}), are values that are not to be exceeded. The visibility standard is not to be equaled or exceeded.

[b] 40 CFR 50. National AAQS, other than those for ozone and based on annual averages, are not to be exceeded more than once a year. The ozone standard is attained when the expected number of days per calendar year with maximum hourly average concentrations above the standard is equal to or less than one.

[c] Concentrations are expressed first in units in which they were promulgated. Equivalent units are given in parentheses and based on a reference temperature of 25°C and a reference pressure of 760 mm of mercury. All measurements of air quality area to be corrected to a reference temperature of 25°C and a reference pressure of 760 mm of mercury (1,013.2 millibar); ppm in this table refers to ppm by volume, or micromoles of pollutant per mole of gas.

[d] New federal 8-hour ozone and fine particulate matter ($PM_{2.5}$) standards were promulgated by U.S. EPA on July 18, 1997. The federal 1-hour ozone standard continues to apply in areas that violated the standard.

[e] Nitrogen dioxide (NO_2) is the compound regulated as a criteria pollutant; however, emissions are usually based on the sum of all oxides of nitrogen (NO_X).

[f] At locations where the state standards for ozone and/or PM_{10} are violated. National standards apply elsewhere.

[g] Insufficient amount to reduce the prevailing visibility to less than 10 miles when the relative humidity is less than 70%. "Prevailing visibility" is defined as the greatest visibility, which is attained or surpassed around at least half of the horizon circle, but not necessarily in continuous sectors.

[h] The federal respirable particle matter (PM_{10}) standard was revoked on September 22, 2006. The fine particulate matter ($PM_{2.5}$) standard was modified on September 22, 2006. The California respirable particle matter (PM_{10}) standard was modified and a new fine particulate matter ($PM_{2.5}$) standard promulgated on July 5, 2003.

AAQS = Ambient Air Quality Standard
NA = Not Applicable
mg/m^3 = milligrams per cubic meter
μg/m^3 = micrograms per cubic meter
ppm = parts per million

Table 8.1-31
Federal and State Attainment Status for Colusa County

Pollutant	Federal Attainment Status	State Attainment Status
Ozone	Unclassifiable/Attainment	Nonattainment/Transitional[a]
CO	Unclassifiable/Attainment	Unclassified[a]
NO_2	Unclassifiable/Attainment	Attainment
SO_2	Unclassifiable	Attainment
PM_{10}	Unclassifiable	Nonattainment
$PM_{2.5}$	Unclassifiable/Attainment	Unclassified[a]

Notes:
Attainment status obtained from 40 CFR 81
[a] Proposed designations for 2006.

Table 8.1-32
Prevention of Significant Deterioration Threshold Triggers

Pollutant	Significant Thresholds (tons per year)	Project Emissions Increase (tons per year)
SO_2	100	11.32
NO_2	100	185.58
POC	100	48.24
PM_{10}	100	142.24
CO	100	272.20
Lead (Pb)	0.6	<0.6 (negligible)

Table 8.1-33
Prevention of Significant Deterioration Allowable Increments ($\mu g/m^3$)

Standard	Class I Area	Class II Area	Class III Area
PM_{10} Annual Arithmetic Mean	4	17	34
PM_{10} 24-Hour Maximum	8	30	60
SO_2 Annual Arithmetic Mean	2	20	40
SO_2 24-Hour Maximum	5	91	182
SO_2 3-Hour Maximum	25	512	700
NO_2 Annual Arithmetic Mean	2.5	25	50

$\mu g/m^3$ = micrograms per cubic meter

Table 8.1-34
Applicable Best Available Control Technology Levels

Pollutant	Significant Thresholds (lbs. per highest day)
POC (VOC or NPOC)	25
NO_X	25
SO_2	80
PM_{10}	80
CO	500

Notes:
CO = carbon monoxide
NO_X = nitrogen oxides
NPOC = non-precursor organic compounds
PM_{10} = particulate matter less than 10 microns in diameter
POC = precursor organic compounds
SO_2 = sulfur dioxide
VOC = volatile organic compounds

Table 8.1-35
Summary of Colusa Generating Station Project Best Available Control Technology

Pollutant	Control Technology	Concentration ppm @ 15% O_2 dry
NO_X	Dry low-NO_X combustors and SCR with ammonia injection	2.0
CO	Catalytic oxidation	3.0
POC	Catalytic oxidation	2.0
SO_X	Pipeline quality natural gas	<1.1
PM_{10}	Pipeline quality natural gas	Not Applicable

Notes:
CO = carbon monoxide
NO_X = nitrogen oxides
PM_{10} = particulate matter less than 10 microns in diameter
POC = precursor organic compounds
SO_X = sulfur oxides

Table 8.1-36
Summary of Recent NO_X Best Available Control Technology Determinations for Combustion Turbine Generators Rated Greater than 50 MW

Name	Location	Emission Limit[a]	Control(s)	Permit Date
PICO	CA	2.0 ppm	SCR with Ammonia	March 05
Metcalf	CA	2.5 ppm	SCR with Ammonia	May 05
Pastoria	CA	2.5 ppm	SCR with Ammonia	July 05
Magnolia	CA	2.0 ppm	SCR with Ammonia	September 05
Malburg	CA	2.0 ppm	SCR with Ammonia	October 05

Notes:
[a] Based on 3-hour average.
ppm = Parts per million by volume, dry basis, at 15% oxygen
SCR = Selective catalytic reduction

Table 8.1-37
Summary of Recent Combustion Turbine CO and VOC BACT Determinations

Project Name	State	Date	CO BACT Level, ppm (at 15% O_2)	VOC BACT Level, ppm (at 15% O_2)
Von Raesfeld (formerly Pico)	CA	3/05	4.0	2.0
Metcalf	CA	5/05	6.0	2.0
Pastoria	CA	7/05	3.0	6.0
Magnolia	CA	9/05	2.0	2.0
Malburg	CA	10/05	2.0	2.0

Colusa County APCD
100 Sunrise Blvd. Suite A-3
Colusa, Ca. 95932 : (530) 458-0595

Attachment M

APPENDIX G3
OPERATING EMISSIONS

Attachment 1
Colusa Generating Station
HRSG Stack and Aux Boiler Emission Calculations - Rev. 0

Ambient Temperature	Winter Minimum - 18°F				Yearly Average- 59°F				Summer Maximum - 114°F			
CTG Load Level	100%	100%	75%	50%	100%	100%	75%	50%	100%	100%	75%	50%
Evap Cooling Status	No	No	No	No	No	No	No	No	Yes	Yes	No	No
Duct Burner Status	Yes	No	No	No	Yes	No	No	No	Yes	No	No	No
Duct Burner Heat Input (MMBTU/hr)	674.3	0	0	0	674.3	0	0	0	688	0	0	0
Stack Outlet Temperature (°F)	162	193	181	175	161	193	181	175	186	202	188	167
Average Emission Rates from each Gas Turbine (lbs/hr/turbine) - Normal Operation												
(Reference: Bechtel/GE Turbine/Site Specific Information)												
Fuel Flow (MMBTU/hr)	2591.5	1917.2	1558.3	1239.1	2451.8	1777.5	1452.1	1161.4	2376.9	1688.9	1387.6	1096.4
NO_x (@ 2.0 ppm)	20.7	15.3	12.3	9.7	19.6	14.2	11.5	9.1	19	13.50	11	8.6
CO (@ 3.0 ppm)	18.9	14	11.3	8.9	17.9	13	10.5	8.3	17.4	12.3	10	7.8
VOC (@ 2.0 ppm)	7.2	3.4	2.7	2.2	6.8	3.1	2.5	2.1	6.6	3	2.5	2.1
SO_2	1.60	1.20	1.00	0.80	1.50	1.10	0.90	0.70	1.50	1.10	0.90	0.70
PM10	20	12.9	12.7	12.6	19.9	12.8	12.7	12.5	20.1	12.8	12.6	12.5
NH_3 (@ 5 ppm slip)	19.2	14.2	11.4	9	18.2	13.1	10.6	8.4	17.6	12.5	10.2	7.9
Stack Exit Velocity (fps)	68.6	71	55.1	44.3	63.7	66	52.3	42.8	63.1	63.7	51.5	42

Startup / Shutdown Emissions from Turbine (1CT)

Cold Startup			Warm Startup			Hot Startup			Shutdown		
270 minutes	Max 1-hr.	Total	180 min.	Max 1-hr.	Total	90 min.	Max 1-hr.	Total	30 min.	Max 1-hr.	Total
	lb/hr	lb/270 min		lb/hr	lb/180 min		lb/hr	lb/90 min		lb/hr	lb/30 min
NO_X	333.30	779.10	NOx	152.00	456.20	NOx	249.90	259.90	NOx	115.00	115.00
CO	373.60	1355.60	CO	370.30	790.50	CO	429.60	679.60	CO	483.50	483.50
VOC	27.70	106.70	VOC	27.70	47.40	VOC	27.70	38.00	VOC	23.90	23.90
SO_2	0.40	1.01	SO2	0.40	0.58	SO2	0.40	0.33	SO2	0.20	0.20
PM10	12.00	48.80	PM	12.00	30.80	PM	12.00	12.80	PM	6.00	6.00

Assumptions:
Startup and Shutdown Emissions from data provided by Client.
Spreadsheet "Colusa Startup Emissions Summary 07-13-06" and email 07/17/06 for shutdown (used higher, 30 min. assumed)
SO_2 emissions assume complete conversion of all sulfur to SO_2.

Average Annual Emissions

Duct Burner Emission Rates are based on the maximum duct burner capability scenario (59°F; 100% load; no evaporative cooling; duct burner duty = 598.3 MMBTU/hr)
Average Operation Emission Rates are based on the average operation scenario (59°F; 100% load; no overpressure; no power augmentation)

			Base Operation patterned after CCPP8	Annual		Turbine Emissions	Emissions for Both Turbines	Sum of four individual quarters below	Higher
Total Hours of Operation		8760							
Total Number of Cold Starts		14.0				lb/yr/CT	ton/yr/2CT	ton/yr/2CT	ton/yr/2CT
Cold Start Duration (hr)		4.50		NO_X		172932.40	172.9	183.0	183.0
Total Number of Warm Starts		0		CO		206859.60	206.9	264.5	264.5
Warm Start Duration (hr)		3.00		VOC		46498.80	46.5	47.4	47.4
Total Number of Hot Starts		42.0		SO_2		11169.86	11.2	10.2	11.2
Hot Start Duration (hr)		1.50		PM		141249.60	141.2	128.2	141.2
Total Number of Shutdowns		56.0							
Shutdown Duration (hr)		0.50							
Duct Burner Operation (hr)		4160	16 h/d for 5 d/wk						
Average Operation (hr)		4446							
Half Load Operation		0							

Attachment 1
Colusa Generating Station
HRSG Stack and Aux Boiler Emission Calculations - Rev. 0

First Quarter Emissions (Jan, Feb, Mar)

Duct Burner Emission Rates are based on the maximum duct burner capability scenario (18°F; 100% load; no evaporative cooler; duct burner duty = 598.3 MMBTU/hr)
Average Operation Emission Rates are based on the average operation scenario (18°F; 100% load; no evaporative cooler).
Actual average temperatures during this quarter are higher. Therefore, this produces a conservatively high emission estimate.

			Base Qtr, actual days, minimum temp.					
Total Hours of Operation		2160		**First Quarter**		**Turbine Emissions**	**Emissions for Both Turbines**	
Total Number of Cold Starts		3.5				**lb/qtr/CT**	**ton/qtr/2CT**	**g/s**
Cold Start Duration (hr)		4.50		NO_X		45140.75	45.1	**2.58**
Total Number of Warm Starts		0		CO		53446.40	53.4	
Warm Start Duration (hr)		3.00		VOC		12272.15	12.3	
Total Number of Hot Starts		10.5		SO_2		2971.61	3.0	
Hot Start Duration (hr)		1.50		PM		35140.55	35.1	
Total Number of Shutdowns		14.0						
Shutdown Duration (hr)		0.50						
Duct Burner Operation (hr)		1040						
Average Operation (hr)		1082						
Half Load Operation (hr)		0.00						

Second Quarter Emissions (Apr, May, Jun)

Duct Burner Emission Rates are based on the maximum duct burner capability scenario (59°F; 100% load; no evaporative cooler; duct burner duty = 598.3 MMBTU/hr)
Average Operation Emission Rates are based on the average operation scenario (59°F; 100% load; no evaporative cooler).
Actual average temperatures during this quarter are higher. Therefore, this produces a conservatively high emission estimate.

			Base Qtr, actual days, average temp.					
Total Hours of Operation		2184		**Second Quarter**		**Turbine Emissions**	**Emissions for Both Turbines**	
Total Number of Cold Starts		3.5				**lb/qtr/CT**	**ton/qtr/2CT**	**g/s**
Cold Start Duration (hr)		4.50		NO_X		43147.90	43.1	**2.46**
Total Number of Warm Starts		0		CO		51636.90	51.6	
Warm Start Duration (hr)		3.00		VOC		11606.10	11.6	
Total Number of Hot Starts		10.5		SO_2		2785.86	2.8	
Hot Start Duration (hr)		1.50		PM		35235.60	35.2	
Total Number of Shutdowns		14.0						
Shutdown Duration (hr)		0.50						
Duct Burner Operation (hr)		1040						
Average Operation (hr)		1106						
Half Load Operation (hr)		0.00						

Attachment 1
Colusa Generating Station
HRSG Stack and Aux Boiler Emission Calculations - Rev. 0

Third Quarter Emissions (Jul, Aug, Sep)

Duct Burner Emission Rates are based on the maximum duct burner capability scenario (59°F; 100% load; no evaporative cooler; duct burner duty = 598.3 MMBTU/hr)
Average Operation Emission Rates are based on the average operation scenario (59°F; 100% load; no evaporative cooler).
Actual average temperatures during this quarter are higher. Therefore, this produces a conservatively high emission estimate.

			PG&E 8/8/06 email worst quarter cycling case					
Total Hours of Operation		1208		**Third Quarter**		**Turbine Emissions**	**Emissions for Both Turbines**	
Total Number of Cold Starts		1.0	start of qtr			**lb/qtr/CT**	**ton/qtr/2CT**	**g/s**
Cold Start Duration (hr)		4.50		NO_X		50868.70	50.9	**2.91**
Total Number of Warm Starts		12	1 each week	CO		106290.31	106.3	
Warm Start Duration (hr)		3.00		VOC		11811.95	11.8	
Total Number of Hot Starts		60.7	4.67 each week	SO_2		1602.42	1.6	
Hot Start Duration (hr)		1.50		PM		22328.73	22.3	
Total Number of Shutdowns		73.7						
Shutdown Duration (hr)		0.50						
Duct Burner Operation (hr)		1040	16x5					
Average Operation (hr)		0						
Half Load Operation (hr)		0.00						

Fourth Quarter Emissions (Oct, Nov, Dec)

Duct Burner Emission Rates are based on the maximum duct burner capability scenario (59°F; 100% load; no evaporative cooler; duct burner duty = 598.3 MMBTU/hr)
Average Operation Emission Rates are based on the average operation scenario (59°F; 100% load; no evaporative cooler).
Actual average temperatures during this quarter are higher. Therefore, this produces a conservatively high emission estimate.

			Base Qtr, actual days, average temp.					
Total Hours of Operation		2208		**Fourth Quarter**		**Turbine Emissions**	**Emissions for Both Turbines**	
Total Number of Cold Starts		3.5				**lb/qtr/CT**	**ton/qtr/2CT**	**g/s**
Cold Start Duration (hr)		4.50		NO_X		43835.20	43.8	**2.50**
Total Number of Warm Starts		0		CO		53086.00	53.1	
Warm Start Duration (hr)		3.00		VOC		11736.20	11.7	
Total Number of Hot Starts		11.5		SO_2		2810.60	2.8	
Hot Start Duration (hr)		1.50		PM		35536.00	35.5	
Total Number of Shutdowns		15.0						
Shutdown Duration (hr)		0.50						
Duct Burner Operation (hr)		1040	16x5					
Average Operation (hr)		1128						
Half Load Operation (hr)		0.00						

Emissions from Auxiliary Boiler

			Hours per Qtr			
			Q1	Q2	Q3	Q4
Total Hours of Operation	2,400	hr/yr	600	600	600	600
Firing Rate	44	MMBtu/hr				
Stack Gas Temp.	329	F				
Flue Gas Flow	20,414	cfm				

		Emissions			
Pollutant	lb/MMBtu	lb/hr	lb/yr	ton/qtr	ton/yr
NOx (@ 7.0 ppm)	0.0108	0.48	1,140.48	0.14	0.57
CO (@50 ppm)	0.037	1.63	3,907.20	0.49	1.95
SO2	0.0006	0.03	63.36	0.01	0.03
VOC (@10 ppm)	0.004	0.18	422.40	0.05	0.21
PM10	0.005	0.22	528.00	0.07	0.26

ppm by volume, dry basis, corrected to 3% oxygen

Attachment 1
Colusa Generating Station
HRSG Stack and Aux Boiler Emission Calculations - Rev. 0

Emissions from Emergency Diesel Generator

Rated Horsepower	1340	BHP
Expected non-emergency usage	50	hr/yr

	Emission Fctr.	Emission Rate		
	g/HP/Hr	lb/hr	lb/yr	tpy
NO_X	4.700	13.88	693.9	0.347
CO	0.110	0.32	16.2	0.008
VOC (Total Hydrocarbons)	0.050	0.15	7.4	0.004
SO_2 (at 15 ppm fuel sulfur)	4.50E-03	0.01	0.7	0.000
PM_{10}	2.90E-02	0.09	4.3	0.002

Emissions from Emergency Diesel Firewater Pump

Rated Horsepower	160	BHP
Expected non-emergency usage	50	hr/yr

	Emission Fctr.	Emission Rate			
	g/HP/Hr	lb/hr	lb/yr	tpy	
NO_X	4.900	1.73	86.3	0.043	
CO	0.540	0.19	9.5	0.005	
VOC (Total Hydrocarbons)	0.000	0.00	0.0	0.000	Inc. with NOx
SO_2 (at 15 ppm fuel sulfur)	4.50E-03	0.00	0.1	0.000	
PM_{10}	1.30E-01	0.05	2.3	0.001	

Worst-Case 1-Hour Emissions per Turbine

Worst-Case 1-Hour Emissions for NO_2 and CO are equal to Cold Startup and Shutdown emission rates, respectively. Worst-Case 1-Hour Emissions for SO_2 are equal to 18°F; 100% load, duct firing emission rates

(lb/hr/turbine)	
NO_2	333.30
CO	483.50
SO_2	1.60
(g/sec/turbine)	
NO_2	41.99
CO	60.92
SO_2	0.20

Worst-Case 3 Hour Emission Rate per Turbine

Only SO_2 is considered for an average 3-hour Ambient Air Quality Standard. Emission rates are equal to 18°F; 100% load, duct firing emission rates.

(lb/hr/turbine)	
SO_2 (lb/hr/CT)	1.60
SO_2 (g/sec/CT)	0.20

Worst-Case 8-Hour Emission Rates

Only CO is considered for an average 8-hour Ambient Air Quality Standard.
Worst-case 8-Hour Scenario includes five hours at Startup and Shutdown rate. Remainder of 8 hours is at 18°F; 100% load, duct firing emission rates.

(lb/hr/turbine)			
Total Hours of Operation	8	lb/hr	lbs
Startup Duration (hours)	4.50		1355.60
Shutdown (hours)	0.50		483.50
Hours of Baseline Operation (hr)	3.00	18.90	56.70
	Total for 8 hrs		1895.80

CO (lb/hr/CT)	236.98
CO (g/s/CT)	29.86

Attachment 1
Colusa Generating Station
HRSG Stack and Aux Boiler Emission Calculations - Rev. 0

Worst-Case 24 Hour Emission Rate

Only SO_2 and PM_{10} are considered for an average 24-hour Ambient Air Quality Standard.
Extreme low temperature, 100% operating load is conservatively assumed for the entirety of the 24 hours.

SO_2 (lb/hr/CT)	1.60
SO_2 (g/s/CT)	0.20
PM_{10} (lb/hr/CT)	20.00
PM_{10} (g/s/CT)	2.52

Worst-Case Daily Emissions per Turbine

For NO_X, CO and VOC assume six hours at startup and shutdown emission rate (approx. three hot startups and three shutdowns), remainder of 18 hours per day at extreme low temperature, 100% full load.
For SO_2 and PM_{10} assume extreme low temperature, 100% operating load for 24 hours.

(Pounds)	start/stop amount	3 start/stop	full load hourly rate	18 or 24 hours of full load	Daily Total
NO_X	374.90	1124.70	20.70	372.60	1497.30
CO	1163.10	3489.30	18.90	340.20	3829.50
VOC	61.90	185.70	7.20	129.60	315.30
SO_2			1.60	38.40	38.40
PM_{10}			20.10	482.40	482.40

Worst-Case Emissions Turbine - Commissioning

(Pounds)	Plant Total	
NO_X	194,000	
CO	608,000	
VOC	27,000	
SO_2	2,225	scaled from pm10
PM_{10}	28,000	

bechtel 10/27

Colusa County APCD
100 Sunrise Blvd. Suite A-3
Colusa, Ca. 95932 : (530) 458-0595

Attachment N

3.0 FACILITY DESCRIPTION AND LOCATION

3.1 INTRODUCTION

The proposed Colusa Generating Station (CGS) consists of a natural gas–fired combined cycle power plant and associated linear facilities. The project will have a nominal electrical output of 660 MW with commercial operation planned by late spring 2010. The project will be fueled with pipeline-quality natural gas that will be delivered to the power plant site via a new 8-inch, 1,500-foot pipeline owned, operated, and maintained by PG&E and interconnecting to PG&E's gas transmission system. The power plant will supply power to the PG&E electrical transmission grid by connecting the plant switchyard with PG&E's existing 230 kV north-south transmission lines located approximately 1,800 feet east of the project site.

Water for the project will be provided by the Glenn-Colusa Irrigation District (GCID) via a new 2,700-foot-long 4-inch pipeline from the Tehama-Colusa Canal, which is located to the west of the project site. The project will use an air cooled condenser as the ultimate heat sink and will employ a zero liquid discharge system that will allow water to be recycled through the plant. The combination of these technologies will minimize the required consumptive use of water for plant operation to the absolute minimum technically possible. No water is being used for the plant heat sink systems. Usage is restricted to water for demineralization for the steam cycle, for combustion turbine inlet air evaporative cooling, fire water, service water, and potable water for eyewash stations, drinking, showers, and sanitation.

Process wastewater will be processed by a zero liquid discharge system; no wastewater will be discharged from the plant. Most of the water from the waste stream will be recycled within the plant, with a small amount evaporated; and the solids, which are nonhazardous, will be transported to an appropriate local landfill.

3.2 PROJECT LOCATION

The CGS will be located in the western Sacramento Valley, an agricultural region of the state. The project site is situated in Colusa County approximately 4 miles to the west of I-5, a primary north-south travel route through California. The site is approximately 14 miles north of the farming community of Williams and 72 miles north of Sacramento.

The project will be located within a 100-acre site leased by E&L Westcoast. This site is within the Holthouse Ranch and is found within the eastern half of Section 35, Township 18 North, Range 4 West, Mount Diablo Base and Meridian. The project site consists of 100 acres of a 451-acre parcel (Assessor's Parcel Number (APN) 11-040-024, Colusa County).

The location of the proposed project is shown on Figure 3.2-1, which also illustrates nearby roads and other features.

3.3 POWER PLANT SITE DESCRIPTION

The power plant, stormwater detention basin, and switchyard will occupy approximately 31 acres within the fenced 100-acre site, as shown on Figure 3.3-1. The plant access road, new transmission interconnection, and access road to the water supply intake on the Tehama-Colusa Canal will require an additional 2.7 acres. Approximately 97 acres will be disturbed during construction of the power plant, switchyard, road/bridge improvements, and linear facilities (the plant access road, proposed transmission line interconnection, natural gas pipeline, and water supply pipeline). Of these 97 acres, approximately 43 acres are for the temporary construction office area, construction parking, and construction equipment and material laydown area (Figure 3.2-1); this area will be returned to pre-construction conditions. The 100-acre site is currently undeveloped agricultural land used for grazing cattle. The terrain where the

plant will be located is rolling hills with topography ranging from 170 to 190 feet above mean sea level (msl). Cut and fill will be required to provide a level area and noncompressible soils for the power generation facility and switchyard. The plant finished grade elevation is estimated to be 183 feet above msl.

3.4 POWER GENERATION FACILITY

The following sections describe the power generation facility site arrangement, process flow diagrams and heat and material balances, major equipment and ancillary systems, including buildings and structures that constitute the proposed combined cycle power plant. The combined cycle power plant will be designed, constructed, and operated in accordance with applicable laws, ordinances, regulations, and standards (LORS). In addition, the power plant facilities will be designed and constructed in accordance with the design criteria provided in Appendices A through E.

3.4.1 Power Plant Site Arrangement

The site arrangement drawings—plot plan, south elevation, and west elevation of the proposed power generation facility—are shown on Figures 3.4-1, 3.4-2, and 3.4-3, respectively.

A 20-foot-wide paved road (Dirks Road) provides access to the existing PG&E Delevan Compressor Station. Access to the power plant site will be provided by a new 30-foot-wide, 2,500-foot-long extension of the existing access road and PG&E Road Easement 295 official record 442, as illustrated on Figure 3.3-1.

Approximately 20 acres are required to accommodate the power generation facility. The power generation facility includes the staff parking area, control/administration/warehouse building, air cooled condenser, power block area, gas metering and pressure regulating station, storage tanks, and water and wastewater treatment facilities. The switchyard will occupy approximately 8.2 acres north of the power generation facility. A stormwater detention basin will occupy approximately 2.5 acres at the southwest corner of the facility.

During construction, the project will use about 43 acres for temporary construction office area, construction parking, and construction equipment and material laydown area located north and east of the power plant. Approximately 5 acres will be disturbed for the Glenn-Colusa Canal Bridge, and about 3.6 acres will be disturbed for the gas and water pipelines.

The water supply intake will be at the Tehama-Colusa Canal. Access to the intake will be provided by a new 12-foot-wide, 2,700-foot-long unpaved road situated between the power plant site and the canal, along the water pipeline alignment.

3.4.2 Process Description

This section describes the power generation process and thermodynamic cycle employed by the proposed project.

The plant power generation facility (power block) consists of two combustion turbine-generators (CTGs) equipped with Dry Low-NO_X combustors and inlet air evaporative coolers; two heat recovery steam generators (HRSGs) equipped with duct burners; one steam turbine-generator (STG) with a multi-cell air cooled condenser; and associated auxiliary systems and equipment. Fuel for the CTGs and duct burners is pipeline-quality natural gas.

The net generating capacity of the combined cycle system will be approximately 660 MW. The actual net output of the system will vary in response to ambient air temperature conditions, use of evaporative

coolers, amount of auxiliary load, generator power factor, firing conditions of the combustion turbines, the amount of supplemental duct firing to the HRSG, and other operating factors. Full load output (net) of the facility under expected operating conditions will range from approximately 640 MW to 667 MW. Annual average ambient conditions and the assumed operating conditions produce the nominal rating.

Annual net output is estimated to be 2,700 GWhr for the full HRSG duct-fired mode and 2,100 GWhr for the unfired mode, each mode operating for 4,030 hours per year.

The plant can operate at part load with either or both of the CTGs operating down to minimum load while keeping the STG on-line. Operational modes will be driven by good operating practices, market conditions, and dispatch requirements.

Overall annual availability of the power plant is expected to be at least 92 percent. The power plant's annual output will depend on market conditions and dispatch requirements. The design of the power plant provides for operating flexibility (i.e., ability to start up, shut down, turn down, and provide peaking output) so that operations may be readily adapted to changing conditions in the energy and ancillary services markets.

Process flow diagrams of the power plant are shown on Figures 3.4-4A through 3.4-4D and 3.4-5A and 3.4-5B. Figures 3.4-4A through 3.4-4D show four different operating cases, which vary with ambient temperature, relative humidity, and operating conditions. Table 3.4-1 identifies the Heat and Material Balances for each of the four operating cases. Figures 3.4-5A and 3.4-5B show the plant water balances, which include the combustion turbine (CT) evaporative cooling water system and the water storage and treatment systems. The power plant's thermodynamic cycle is described briefly below.

Air flows through the CTG inlet air filter, evaporative coolers, and associated ductwork to the CTG compressor section. The compressed air from the compressor section flows to the CTG combustor section where it is mixed with compressed natural gas and ignited. The hot combustion gases flow through the CTG turbine expander section, which drives both the CTG compressor section and the separate electric generator. The combustion gases exit the turbine expander section and enter the inlet duct of the HRSG, which is also equipped with duct burners. The burners further increase the temperature of the exhaust gases, which then enter the HRSG steam generation section.

In the HRSG's steam generation section, heat from the combustion gases is transferred to water pumped through the HRSG steam generation components (economizers, evaporators, drums, superheaters, etc.). The water is converted to steam at three pressures: high pressure (HP), intermediate pressure (IP) and low pressure (LP). Each of these flows is superheated and is delivered to the STG. HP steam admitted to the HP section of the STG expands through the HP section and exits the HP section as "cold" reheat steam. The "cold" reheat steam is combined with superheated IP steam and returned to the reheater section of the HRSG, where it is reheated and returned to STG, continuing its expansion and driving the generator. Reheating the intermediate pressure steam improves the overall steam cycle efficiency. Exhaust steam from the STG is directed downward into a steam duct to the air cooled condenser where it is condensed into water and recycled back to the HRSG as boiler feed water. The absorbed heat from the air cooled condenser is rejected to the atmosphere.

3.4.3 Combustion Turbine-Generators, HRSGs, and Steam Turbine-Generator

This section describes the major components and systems of the proposed project: the CTGs, HRSGs, STG, and Heat Rejection (Cooling) System. A listing of major equipment is provided in Table 3.4-2.

3.4.3.1 Combustion Turbine-Generators

Thermal energy is produced in both of the two CTGs through the combustion of natural gas, and is converted into mechanical energy in the CTG turbine that drives the CTG compressor and electric generator. The CTGs are Model 7FA machines and will be supplied by GE Power Systems.

Each CTG will consist of a heavy-duty, single-shaft combustion turbine-generator and associated auxiliary equipment. The CTGs will be equipped with dry low NO_X combustors designed for natural gas and are designed to meet the following functional requirements:

- Air emissions at the gas turbine exhaust shall not exceed the levels described in Section 8.1, Air Quality.
- Noise emissions shall not exceed the near-field and property line levels described in Section 8.5, Noise.
- Each CTG shall be capable of operation across the broad range of 50 to 100 percent load while meeting required air emission performance.

The CTGs will be equipped with the following accessories required to provide efficient, safe, and reliable operation:

- Inlet air filters and on-line filter cleaning system
- Inlet air evaporative coolers
- On-line and off-line compressor wash system
- Metal acoustical enclosures
- Fire detection and protection system
- Lubrication oil system, including oil coolers and filters
- Generator coolers
- Starting system, auxiliary power system, and control system

The metal acoustical enclosures that contain the CTGs and accessory equipment will be located outdoors.

3.4.3.2 Heat Recovery Steam Generators

The HRSGs provide for the transfer of heat from the CTG exhaust gases to condensate and feedwater to produce steam.

The HRSGs will be multi-pressure, natural circulation boilers equipped with transition ducts and duct burners, and 19-foot-diameter exhaust stacks 175 feet tall, based on air quality modeling results. Pressure components of each HRSG include an LP economizer, LP evaporator, LP drum, LP superheater, IP economizer, IP evaporator, IP drum, IP superheater, HP economizer, HP evaporator, HP drum, HP superheater, and reheaters.

Superheated high-pressure steam is produced in the HRSG and flows to the steam turbine throttle inlet. The exhausted cold reheat steam from the steam turbine is mixed with intermediate pressure steam from the HRSG and is reintroduced into the HRSG through the reheaters. The hot reheat steam flows back from the HRSG into the STG. LP superheated steam from the HRSG is admitted to the LP sections of the STG.

Steam that is exhausted from the STG is condensed in an air cooled condenser. The condensate is pumped from the air cooled condenser by condensate pumps back to the HRSG. The condensate is preheated by an HRSG feedwater heater. Boiler feedwater pumps send the feedwater through

economizers and into the boiler drums of the HRSG, where steam is produced, completing the steam cycle.

Duct burners are installed in the HRSG transition duct between the HP superheater and reheat coils. Through the combustion of natural gas, the duct burners heat the CTG exhaust gases to generate additional steam.

Each HRSG is equipped with a selective catalytic reduction (SCR) system that uses aqueous ammonia in conjunction with a catalyst bed to reduce NO_X in the CTG exhaust gases. The catalyst bed is contained in a catalyst chamber located within each HRSG. Ammonia is injected upstream of the catalyst bed. The subsequent catalytic reaction converts NO_X to nitrogen and water, resulting in a reduced concentration of NO_X in the exhaust gases exiting the stack.

An oxidation catalyst located within each HRSG reduces the concentration of carbon monoxide in the exhaust gases exiting the stack. The oxidation catalyst also reduces the concentration of volatile organic compound emissions.

3.4.3.3 Steam Turbine-Generator

The STG system includes a reheat steam turbine-generator, a governor system, a steam admission system, and a gland steam system, a lubrication oil system including oil coolers and filters, and generator coolers.

Steam from the HP superheater, reheater, and LP superheater sections of the HRSG then enters the corresponding sections of the STG, where it expands and drives the steam turbine and its generator. Upon exiting the turbine, the steam enters the air cooled condenser where it is condensed to water.

3.4.3.4 Cooling System for Heat Rejection

The heat rejection system of the steam cycle consists of a deaerating type air cooled condenser and closed air cooled auxiliary cooling water system. The air cooled condenser receives exhaust steam from the LP section of the STG and condenses it to liquid, then deaerates the condensate for return to the HRSGs. The air cooled condenser is a multi-cell tubular heat exchanger with wet, saturated steam condensing on the tube side and air flowing across the outside of the tubes to provide cooling. The tube side of the condenser is designed to operate under a full vacuum, with an absolute pressure of 8.0 inches of mercury (in. Hg) at design ambient conditions.

The STG exhaust steam enters the air cooled condenser through a main duct, and is distributed among multiple cells. Each cell has a mechanical draft fan which forces air across finned tubes containing the steam. The air condenses the steam, and the condensate flows down to a collection header. The collection header empties into a deaerator where makeup water is also added. A steam jet air ejector removes oxygen and any noncondensable gases from the condensate. The condensate flows down into a condensate storage tank, and then is pumped back into the HRSGs via the vacuum condensate pumps.

The closed (air cooled) auxiliary cooling water system provides for indirect cooling of the CTGs' and STG's lube oil, hydraulics, and generators. The auxiliary system consists of pumps that pump the cooling medium (water/glycol mixture) through an air cooled fin fan heat exchanger where the heat is rejected to the air. The cooling medium passing through the plate and frame exchanger cools the lube and hydraulic oil and is returned to the auxiliary cooling water pump suction.

3.4.3.5 Project Noise Control Features

As part of the facilities design, specific noise control equipment will be incorporated:

- Inlet air silencer (8 feet for up and over with lined elbow)
- Gas turbine – enclosure
- Accessory compartment – enclosure
- Acoustical barrier walls around the exhaust diffuser and duct
- HRSG stack silencer

The incorporation of these noise control devices has been included in the formulation of equipment noise generation values used in the noise analysis contained in Section 8.5.

3.4.4 Major Electrical Systems and Equipment

This section describes the major electrical systems and equipment for the proposed project. A one-line electrical diagram of the major and auxiliary plant electrical systems is presented on Figures 3.4-6 and 3.4-7.

Step-up transformers and plant switchyard power will be generated at 18.0 kV by the two CTGs and one STG, and then stepped up to 230 kV for delivery to the power plant's interconnection with PG&E's transmission grid. Each of the plant's three generators will be connected by an 18 kV isolated phase bus duct to a dedicated 18-230 kV oil-filled, step-up transformer. Each step-up transformer is installed on a concrete pad/pit designed to contain the transformer oil in the event of a leak or spill.

The plant will be interconnected with PG&E transmission lines using a six-bay, ten-position breaker and a half configuration switchyard. Two positions of this switchyard will be used to connect the plant output to the switchyard. The high voltage side of one CTG transformer will be connected on one of the two positions of the switchyard. The high voltage side of two step-up transformers (one from one CTG and the other from the STG) will be connected on the other position of the switchyard. PG&E's existing four 230 kV transmission lines, which are located east of the plant and run north–south, will be looped into the new plant switchyard. A one-line electrical diagram of the 230 kV switchyard is shown on Figure 3.4-8. Additional information on the transmission interconnection with the PG&E transmission system is provided in Chapter 5, Transmission Facilities.

3.4.4.1 Electrical System for Plant Auxiliaries

Power for plant auxiliaries will be supplied at 4,160 volts (V) from the new 230 kV plant switchyard. Two 18 kV–4,160 V oil-filled, step-down, auxiliary transformers will be connected to the two CTGs between the generator breakers and the CTG main step-up transformers. The low voltage side of the auxiliary transformers will be connected to 4,160 V switchgear. This configuration allows the power for plant auxiliaries to be supplied from the plant switchyard regardless of whether the CTGs and STG are on-line or off-line. The auxiliary transformers will rest on concrete pads designed to contain the transformer oil in the event of a leak or spill.

The 4,160 V switchgear will distribute power to the plant's 4,160 V motors, to the CTG starting systems, and to 4,160–480 V auxiliary transformers. The low voltage side of the 4,160–480 V transformers will be connected to 480 V switchgear. The 480 V switchgear will distribute power to the plant's large 480 V loads and to 480 V motor control centers (MCCs). The MCCs will distribute power to the plant's intermediate 480 V loads and to power panels serving small 480 V loads.

The MCCs will also distribute power to 480–277 V isolation transformers serving 277 V single-phase loads and to 480–208/120 transformers serving 208 V and 120 V loads.

3.4.4.2 DC Power Supply System

The facility shall include two 125 V DC battery chargers for each battery system. These two chargers shall be powered from two separate sources of AC power.

Under normal operating conditions, the battery charger supplies DC power to the DC loads. The battery charger receives 480 V, three-phase AC power from the electrical system serving plant auxiliaries. The battery charger continuously charges the battery bank while supplying DC power to the DC loads. Under abnormal or emergency conditions when AC power is not available, the battery bank supplies DC power to the DC loads. The battery bank will be sized to power the DC loads for a sufficient amount of time to provide for safe and damage-free shutdown of the power plant. Recharging of the battery bank occurs whenever AC power becomes available.

The DC power supply system provides power for critical control circuits, power for control of the 4160 V and 480 V switchgear, and power for DC emergency backup systems. Emergency backup systems include DC lighting and DC lube oil and seal oil pumps for the CTGs and STG.

3.4.4.3 Uninterruptible Power Supply System

An uninterruptible power supply (UPS) system (120 V, single-phase) provides power to essential instrumentation, critical equipment loads, safety systems, and equipment protection systems that require uninterruptible AC power. This system and the DC power supply system will be designed to ensure that critical safety and equipment protection control circuits are always energized and able to function in the event of unit trip or loss of AC power.

This system will consist of an inverter, a solid-state transfer switch, a manual bypass switch, an alternate AC source transformer and voltage regulator, and AC panelboards.

The DC power supply system is the normal source of power to the UPS system. Power flows from the DC power supply system through the inverter to the AC panelboards. The solid-state transfer switch continuously monitors both the inverter output and the alternate AC source. Upon loss of the inverter output and without interruption of power, the transfer switch automatically transfers essential service AC loads from the inverter output to the alternate AC source. The manual bypass switch enables isolation of the inverter and transfer switch for testing and maintenance without interruption of power to the essential service AC loads.

3.4.4.4 Standby Diesel Generator

A 1,000 kW standby diesel generator will be connected to the essential system bus during extended utility outages. This bus will maintain a safe shutdown mode by supplying the plant essential loads including the battery chargers, essential AC system, selected HVAC, and loads required for safe shutdown of the CTGs, HRSGs and STG as required.

3.4.5 Fuel Gas Supply and Consumptive Use

Estimated fuel consumption at base load and 59°F ambient without duct firing is 3,214 million British thermal units (Btu) per hour, lower heating value. The estimated fuel consumption at the same conditions with duct firing is 4,426 million Btu per hour. Table 3.4-3 describes the expected properties of the natural gas to be supplied by PG&E.

The natural gas will be supplied at a pressure of 545 to 855 pounds per square inch gauge (psig) and will be letdown to a pressure of about 500 pounds psig at the plant, filtered, and pressure-regulated prior to entering the CTG and duct burner systems. Safety pressure relief valves will be provided downstream of the pressure regulation station. Each CTG fuel gas system will include a fuel gas performance heater, which uses hot water from the HRSG.

Natural gas will be supplied to the project site via a newly constructed 1,500-foot-long pipeline that will interconnect to PG&E's gas transmission system, as shown on Figure 3.3-1. A description of the pipeline, interconnection, and gas supply is given in Chapter 6, Natural Gas Supply.

3.4.6 Water Supply and Consumptive Requirements

This section provides estimated consumptive use of water and describes its source, quality, and proposed water treatment systems. The power plant's various water uses include makeup for the HRSGs, water for the CTG inlet air evaporative coolers, service water system, potable water, and fire protection water. A water balance diagram is presented on Figures 3.4-5A and 3.4-5B. The flow rate key to these diagrams is provided in Table 3.4-5.

3.4.6.1 Water Consumption Requirements

Average and annual water consumption requirements are summarized in Table 3.4-4. Average requirements are based on continuous plant consumption under an average annual operating condition of 59°F dry bulb temperature (DBT) and 60 percent relative humidity. The CTG inlet air evaporative coolers are not in-service and there is no duct firing. Maximum requirements are based on water consumption at maximum operating conditions of 94°F (DBT) and 25 percent relative humidity. Both CTG inlet air evaporative coolers are in-service at maximum duct firing. Annual requirements are derived from the weighted average requirements based on the plant operating 50 percent of the time with duct burners on, and with the CT evaporative coolers operating for six months out of the year (May to October). Average annual usage assumes that the plant has an equivalent availability of 100 percent, or 8,760 operating hours per year. Table 3.4-5, Water Balances, provides the estimated continuous water flow rates in gallons per minute corresponding to the heat and material balance case descriptions presented in Table 3.4-1.

3.4.6.2 Water Source and Quality

Water will be provided by the Glenn-Colusa Irrigation District (GCID) via a new 2,700-foot-long, 4-inch pipeline from the Tehama-Colusa Canal (see Figure 3.3-1). The water will be used to satisfy various process needs, including makeup water for the HRSG and auxiliary boiler, water for the combustion turbine inlet air evaporative coolers, general plant service water, stored firewater, and potable water. A sample water quality analysis from the Tehama-Colusa Canal is presented in Table 3.4-6.

The facility will include a raw water/firewater storage tank that has a combined nominal capacity of approximately 400,000 gallons. Its capacity will include storage of 61,000 gallons of water to satisfy 8 hours of plant operation at summer peak conditions in case of water supply interruption, and 300,000 gallons of water dedicated to the plant's fire protection system. Any excess water in the tank would be for plant usage. The tank will be totally enclosed. A more extensive discussion of the project's water supply and conveyance is given in Chapter 7, Water Supply.

3.4.6.3 Water Treatment

The Water Balance Diagrams, Figures 3.4-5A and 3.4-5B, show the power plant's water treatment processes and the distribution of treated water. Water treatment varies according to the quality required for each of the plant's various water uses: CTG inlet air evaporative coolers, HRSG makeup, service water, and potable water. The following sections describe the plant's water uses and treatment.

3.4.6.4 CTG Evaporative Coolers

Makeup water for the CTG evaporative coolers is supplied from the raw water/firewater storage tank. Water evaporates from the cooler and passes through the CTG. Minerals are concentrated in the remaining water that is not evaporated. To prevent minerals from concentrating to levels above the CTG design, the remaining water is removed as blowdown to approximately 5 cycles of concentration. The blowdown is routed to the evaporator in the zero liquid discharge system, where water is recovered for reuse in the plant and the remaining salts are concentrated for disposal off site. As required, makeup water is added to replace the water that is lost to evaporation and blowdown.

3.4.6.5 HRSG Makeup and Steam/Feedwater Conditioning and Monitoring

Water for the HRSGs must meet stringent specifications for suspended and dissolved solids. To meet these specifications, recovered (distilled) water from the evaporator of the zero liquid discharge system is routed to the demineralizer. Demineralization is accomplished using ion exchange equipment. Demineralization final treatment is by electro-deionization. Storage of demineralized product water is provided in a covered demineralized water storage tank with a nominal capacity of 200,000 gallons. This provides sufficient capacity for 48 hours of peak load operation coinciding with one redundant train of demineralizers not operating.

Additional conditioning of the condensate and feedwater circulating in the steam cycle is provided by means of a chemical feed system. To minimize corrosion, an oxygen scavenger for dissolved oxygen control and an alkaline solution for pH control are fed into the condensate. To minimize scale formation, a solution of alkaline phosphate is typically fed into both the HP and IP drums of the HRSG. The chemical feed system includes oxygen scavenger chemical containers, alkaline solution chemical containers, phosphate solution chemical containers for the HP drum, and phosphate solution chemical containers for the IP drum. Each of the chemical containers is provided with two full-capacity metering pumps, except the phosphate chemical feed system, which has two full-capacity metering pumps (one for HP, and one for IP), plus a common spare.

A steam cycle sampling and analysis system monitors the water quality at various points in the plant's steam cycle. The resulting water quality data are used to guide adjustments in water treatment processes and chemical feeds, and to determine the need for other corrective operational or maintenance measures. Steam and water samples are routed to a sample panel where steam samples are condensed and the pressure and temperature of all samples are reduced as necessary. The samples are then directed to automatic analyzers for continuous monitoring of conductivity, dissolved oxygen, and pH. All monitored values are indicated at the sample panel and critical values are transmitted to the plant control room. Grab samples are periodically obtained at the sample panel for chemical analyses that provide information on a range of water quality parameters.

3.4.6.6 Service Water

Utility stations in various locations of the facility provide service water to washdown tools, equipment, and areas adjacent to the utility station.

3.4.6.7 Potable Water

The raw water supplied by GCID will be treated for potable water use. The potable water will be used for toilets, showers, emergency eyewash, and shower stations. Bottled water will be used for drinking.

3.4.7 Waste Management

This section describes the waste management processes leading to proper collection, treatment, and disposal of wastes. Wastes include wastewater, solid nonhazardous waste, and hazardous waste. Additional information on waste management can be found in Section 8.13.

3.4.7.1 Wastewater

The Water Balance Diagrams, Figures 3.4-5A and 3.4-5B, show the power plant's wastewater streams and the disposition of wastewater. There are two separate wastewater collection systems. The first is the plant wastewater system, which collects wastewater from the CTG evaporative coolers and HRSGs, water treatment system, chemical feed area drains, and general plant drains. This system is designed as a zero liquid discharge system, such that most process wastewater is recycled within the plant, with a small amount evaporated or concentrated in the dryer. No wastewater will be discharged to surface waters. The second is the sanitary system, which collects sanitary wastewater from sinks, toilets, and other sanitary facilities and discharges it to an onsite septic system. The sanitary system is based on gravity flow and may include lift stations if required.

The plant wastewater system collects all wastewater generated in the operation of the plant and delivers it to the zero liquid discharge system. Wastewater streams, including CTG evaporative cooler and HRSG boiler blowdowns, are recycled through the water purification system and are returned to the demineralizer as a makeup supply. Reject streams are concentrated in a dryer, which reduces the waste stream to solids. These solids will be disposed of by trucking the waste off site to an approved landfill.

The plant's wastewater streams and treatments are described below in more detail.

Evaporative Cooler Blowdown

The concentration of dissolved solids in the evaporative cooler water is maintained below given limits, primarily for total dissolved solids (TDS), by withdrawing a portion of the evaporative cooler water (i.e., evaporative cooler blowdown) and replacing it with fresh makeup water from the raw water storage tank and recycling the evaporative cooler blowdown. The blowdown stream is sent to the demineralization water treatment system for reuse.

HRSG Blowdown

Water circulating in the plant's steam cycle accumulates dissolved solids that must be maintained below given limits to prevent deposition of solid particles on the steam turbine blading. The concentration of dissolved solids is maintained below such limits by withdrawing a portion of the water from the HRSG steam drums (i.e., HRSG blowdown), and replacing it with product water from the demineralization process described previously. HRSG blowdown is routed to the demineralization water treatment system for reuse.

Water Treatment System Demineralizer

The water treatment system demineralizer includes a micro filtration system, first and second pass reverse osmosis (RO) systems, and an electro-deionizer unit. The demineralizer receives recycled feed water that is distillate water from the evaporator unit of the zero liquid discharge system. Demineralized water from the demineralizer is sent to the demineralized water storage tank.

The electro-deionizer equipment consisting of a membrane and ion exchange system will continuously produce a concentrated reject water stream that contains all of the dissolved solids removed from the

distillate water stream. This reject water stream will be routed to the evaporator and dryer of the zero liquid discharge system.

Chemical Feed Area Drainage

Chemical feed area drainage consists of spillage, chemical tank overflows, maintenance operations, and chemical area wash downs, and is collected in corrosion-resistant piping separate from the general plant drainage system. The chemical feed area drainage is routed to a neutralization tank, adjusted to neutral pH, and then routed to the evaporator and dryer of the zero liquid discharge system.

General Plant Drainage

General plant drainage consists of wastewater collected by sample drains, equipment drains, equipment leakage, and area wash downs. Wastewater collected in the general plant drainage system is routed to the storm drain system. General plant drainage that potentially contains oil or grease is routed through an oily water separator, combined with the plant process wastewater and then discharged into the storm drain system. Water is then conveyed to the stormwater detention basin.

3.4.7.2 Solid Nonhazardous Waste

The construction, operation, and maintenance of the plant generates nonhazardous solid wastes typical of power generation facilities. Wastes generated during construction generally include soil, scrap wood, excess concrete, empty containers, scrap metal, and insulation. Typical wastes generated during operation and maintenance include scrap metal and plastic, insulation material, paper, glass, empty containers, sludge from the zero liquid discharge system, and other miscellaneous solid wastes. These materials are collected for recycling or transfer to landfills in accordance with applicable regulatory requirements. Descriptions of the types of wastes likely to be generated and their related quantities are provided in Section 8.13.2 and shown in Tables 8.13-1 and 8.13-4.

3.4.7.3 Hazardous Waste

Hazardous wastes will be generated as a result of project construction, operation, and maintenance. The majority of hazardous waste generated during construction will be liquid wastes such as waste oil and other lubricants from machinery operations, solvents used for cleaning and materials preparation, waste paints, and other material coatings. A description of the types and quantities of hazardous wastes that are likely to be generated is given in Section 8.13.2 and shown in Tables 8.13-1 and 8.13-4. The methods used to properly collect and dispose or recycle hazardous waste generated by the plant depend on the nature of the waste.

Hazardous wastes generated by the plant include spent selective catalytic reduction (SCR) and oxidation catalyst, used oil filters, used oil, and chemical cleaning wastes. Spent SCR and oxidation catalyst will be recycled by the catalyst supplier. Used oil filters will be recycled or disposed of to an offsite disposal facility. Used oil will be recovered and recycled by a waste oil recycling contractor.

Chemical cleaning wastes consist of acid and alkaline cleaning solutions used for pre-operational chemical cleaning of the HRSG pressure parts and steam cycle piping systems, acid cleaning solutions used for periodic chemical cleaning of the HRSGs, and wash water used in periodic cleaning of the HRSG, CTG, and STG. These wastes, which may have elevated concentrations of metals, will be tested. If allowable, they will be routed to the zero liquid discharge system. If hazardous, they will be disposed of in accordance with all applicable laws, ordinances, regulations, and standards. These and all other hazardous solid and liquid wastes will be disposed of in accordance with applicable laws, ordinances, regulations, and standards.

Workers will be trained to handle waste generated at the site as described in Section 8.7, Worker Safety and Health.

3.4.8 Hazardous Material Management

A variety of hazardous materials will be used and stored during construction and operation of the proposed project. All hazardous materials will be stored in appropriate storage facilities. Bulk materials will be stored in tanks, and other materials will be stored in delivery containers. All hazardous material storage and use areas will be designed to contain leaks and spills. Containment structures will be provided with sufficient volume to contain the spill of a full tank without overflow. For multiple tanks located within a single containment structure, the largest single tank will be used to size the containment volume.

The aqueous ammonia storage tanks for the SCR system will be provided with a containment structure and other safety features, as described in Section 3.5.9, Ammonia Storage Facility.

Hydrogen for the CT and ST hydrogen-cooled generators will be stored in a bulk tank outside, away from electric lines and other potential ignition sources, in secured areas as required by applicable building and fire codes. The hydrogen will be stored in a Compressed Gas Association (CGA)-approved tank. The tank will be secured to prevent physical upset and damage.

Carbon dioxide for the fire suppression system will be stored in a bulk tank outside, away from occupied areas, in secured areas as required by applicable building codes. The carbon dioxide will be stored in a CGA-approved tank. The tank will be secured to prevent physical upset and damage.

Safety showers and eye wash stations will be provided in the chemical feed areas. Service water hose connections will be provided near the chemical feed areas to facilitate flushing of leaks and spills of non–water-reactive materials to the chemical feed area drains. Appropriate safety gear will be provided for plant personnel for use during the handling, use, and cleanup of hazardous materials. Plant personnel will be properly trained in the handling, use, and cleanup of hazardous materials used at the plant and in procedures to be followed in the event of a leak or spill. Adequate supplies of appropriate cleanup materials will be stored on site.

All electric equipment will be specified to be free of polychlorinated biphenyls (PCBs). A list of the hazardous materials anticipated to be used at the plant is provided in Table 3.4-7. Each material is identified by type, intended use, and estimated quantity to be stored on site. Additional information on hazardous material management can be found in Section 8.12, Hazardous Materials Handling.

3.4.9 Air Emissions Control and Monitoring

Air emissions from the combustion of natural gas in the CTGs' and HRSGs' duct burners are controlled by state-of-the-art systems. Emissions that are controlled include NO_X, carbon monoxide (CO), volatile organic compounds (VOCs), fine particulate matter (PM_{10}), and sulfur dioxide (SO_2). A continuous emissions monitoring system will be installed to monitor the stack emissions. All emissions values stated in the following subsections are based on parts per million by volume, dry basis (ppmvd) corrected to 15 percent oxygen (O_2). Complete information on air quality matters, including startup emissions, is provided in Section 8.1, Air Quality.

3.4.9.1 NO_X Emissions Control

Dry Low-NO_X (DLN) combustors in the CTGs followed by SCR in the HRSGs will control stack emissions of nitrogen oxides (NO_X) to a maximum 2.0 parts per million by volume, dry (ppmvd) (1-hour average excluding startups). The DLN combustors control NO_X emissions to approximately 9 ppmvd at

the CTG exhausts by pre-mixing fuel and air immediately prior to combustion. Pre-mixing inhibits NO_X formation by minimizing the flame temperature and the concentration of oxygen at the flame front.

The SCR process uses aqueous ammonia (NH_3) as a reagent. Stack emissions of ammonia, referred to as "ammonia slip," will not exceed 5 ppmvd. The SCR system includes a catalyst chamber located within each HRSG, catalyst bed, ammonia storage system, and ammonia injection system. The catalyst chamber contains the catalyst bed and is located in a temperature zone of the HRSG where the catalyst is most effective over the range of loads at which the plant will operate. The ammonia injection grid is located upstream of the catalyst chamber. It is expected that the 20,000-gallon aqueous ammonia storage tank has a 10-day storage capacity.

3.4.9.2 CO and VOC Emissions Control

An oxidation catalyst will be provided in the HRSG to limit CO emissions to 3 ppmvd and to ensure that emissions of VOCs are controlled to less than 2 ppmvd at 15 percent O_2. These emission levels correspond to current California Best Available Control Technology (BACT). This catalytic system will promote the oxidation of CO to carbon dioxide and VOC to carbon dioxide and water vapor without the need for additional reagents such as ammonia.

3.4.9.3 PM_{10} and SO_2 Emissions Control

PM_{10} emissions consist primarily of hydrocarbon particles formed during combustion. PM_{10} emissions are controlled by inlet air filtration and by the use of natural gas fuel, which contains essentially zero particulate matter.

SO_2 emissions are controlled by the use of pipeline-quality natural gas fuel, which contains only trace quantities of sulfur.

3.4.9.4 Emissions Monitoring

The continuous emissions monitoring system (CEMS) samples, analyzes, and records NO_X, CO, and O_2 concentrations in the stack exhaust. The CEMS generates a log of emissions data for compliance documentation and activates an alarm in the plant control room when stack emissions exceed specified limits.

3.4.10 Fire Protection

Fire protection systems are provided to limit personnel injury, property loss, and plant down time resulting from a fire. The systems include a fire protection water system, carbon dioxide fire suppression systems for the CTGs, and portable fire extinguishers. The fire protection water will be supplied from a dedicated 300,000-gallon portion of the 400,000-gallon raw water/firewater storage tank located on the power block site. Two fire pumps that are 100 percent dedicated to the fire protection system, with a capacity of 2,500 gallons per minute each, deliver water to the fire protection water piping network. One of the fire pumps is driven by an electric motor; the second pump is driven by a diesel engine. A third pump, a small capacity jockey pump driven by an electric motor, maintains pressure in the piping network. If the jockey pump is unable to maintain a set operating pressure in the piping network, the electric motor-driven fire pump starts automatically. If the electric motor-driven fire pump is unable to maintain a set operating pressure, the diesel engine-driven fire pump starts automatically. The piping network is configured in a loop so that a piping failure can be isolated with shutoff valves without interrupting the supply of water to a majority of the loop. Fire suppression equipment supplied by the piping network includes fire hydrants and sprinkler systems. Fire hydrants are located at intervals throughout the power plant site. Sprinkler systems are provided in the administration building, control building, and warehouse.

The carbon dioxide (CO_2) fire suppression system provided for each CTG will include a CO_2 storage tank, CO_2 piping and nozzles, fire detection sensors, and a control system. The control system will

automatically shut down the CTG, turn off ventilation, close ventilation openings, release CO_2 upon detection, and confirm the existence of a fire. The CO_2 fire suppression systems will cover the turbine enclosure and accessory equipment enclosure of each CTG.

Portable fire extinguishers of appropriate sizes and types will be located throughout the power plant site.

3.4.11 Plant Auxiliary and Safety Systems

The plant auxiliary systems described below support, protect, and control the power plant.

3.4.11.1 Lighting System

The lighting system provides operations and maintenance personnel with illumination in both normal and emergency conditions. The system consists primarily of AC lighting, and includes DC lighting for activities or emergency egress required during an outage of the plant's AC electrical system. Lighting fixtures will be directionally oriented, shielded and hooded to minimize offsite migration of light. The electrical distribution system also provides AC convenience outlets for portable lamps and tools.

3.4.11.2 Grounding System

The power plant's electrical systems and equipment are susceptible to ground faults, switching surges, and lightning, which can impose hazardous voltage and current on plant equipment and structures. To protect against personnel injury and equipment damage, the grounding system provides an adequate path to dissipate hazardous voltage and current under the most severe conditions. Bare conductor is installed below grade in a grid pattern, and each junction of the grid is bonded together by welding or mechanical clamps. The grid spacing is designed to maintain safe voltage gradients. Ground resistivity readings are used to determine the necessary grid spacing and numbers of ground rods. Steel structures and nonenergized parts of plant electrical equipment are connected to the grounding grid.

3.4.11.3 Distributed Control System

The distributed control system (DCS) provides control, monitoring, alarm, and data storage functions for power plant systems.

The following functions will be provided:

- Control of the CTGs, STG, HRSGs, and balance-of-plant systems in a coordinated manner.
- Monitoring of operating parameters from plant systems and equipment, and visual display of the associated operating data to control operators and technicians.
- Detection of abnormal operating parameters and parameter trends, and provision of visual and audible alarms to apprise control operators of such conditions.
- Storage and retrieval of historical operating data.

The DCS is a microprocessor-based system. Redundant capability is provided for critical DCS components such that no single component failure will cause a plant outage. The DCS consists of the following major components:

- CRT-based control operator interface (redundant).
- CRT-based control technician workstation.
- Multi-function processors (redundant).
- Input/output processors (redundant for critical control parameters).
- Field sensors and distributed processors (redundant for critical control parameters).

- Historical data archive.
- Printers, data highways, data links, control cabling, and cable trays.

The DCS is linked to the control systems furnished by the CTG and STG supplier. These data links provide CTG and STG control, monitoring, alarm, and data storage functions via the CRT-based control operator interface and control technician work station of the DCS.

3.4.11.4 Cathodic Protection System

The cathodic protection system will be used as required to protect against electrochemical corrosion of underground metal piping and structures.

3.4.11.5 Freeze Protection Systems

Due to the infrequency and short duration of below-freezing ambient temperatures at the project site, freeze protection systems will be provided only in susceptible outdoor areas.

3.4.11.6 Service Air System

The service air system supplies compressed air to hose connections located at intervals throughout the power plant. Compressors deliver compressed air at a regulated pressure to the service air piping network.

3.4.11.7 Instrument Air System

The instrument air system provides dry, filtered air to pneumatic operators and devices throughout the power plant. Air from the service air system is dried, filtered, and pressure-regulated prior to delivery to the instrument air piping network.

3.4.11.8 Auxiliary Boiler System

An auxiliary boiler with superheater will be provided to maintain steam turbine seals during overnight and weekend shutdowns to facilitate fast startups, to provide steam for the air cooled condenser steam jet air ejectors (hogging and holding) to maintain vacuum during shutdown, and will include the capacity needed for zero liquid discharge operation.

The auxiliary boiler will be a 30,000 pounds per hour (44 mm BTU/hr) water tube boiler with superheater, and shall include all components comprising the furnace, steam drum, economizer, forced draft fan, firing equipment, ducts, dampers, stack, deaerator, pumps, piping, steam safety valves, instrumentation and other components required for a complete steam generating unit. The boiler shall be a bottom supported, pressurized furnace. The boiler will be designed to operate satisfactorily with the specified natural gas fuel and shall incorporate the vendor's standard Low NO_X burner and emissions control systems and meet the requirements of the Air Permit. The auxiliary boiler shall be designed to withstand and perform under the site ambient conditions specified. The auxiliary boiler will be located outdoors, and will be protected from freezing conditions when the unit is off-line.

3.5 POWER PLANT CIVIL/STRUCTURAL FEATURES

The following sections describe civil/structural features of the power plant, as illustrated in the site plan presented in Figure 3.3-1. Figures 3.5-1, 3.5-2, and 3.5-3 illustrate the site's existing topography, proposed stormwater management and erosion control plan. Table 3.5-1 lists the major structures of the power plant and gives their dimensions. In addition to the features described in this section, descriptions

of the electric transmission interconnection and the gas supply and water supply pipelines are given in Chapters 5, 6, and 7, Transmission Facilities, Natural Gas Supply, and Water Supply, respectively.

3.5.1 CTGs, HRSGs, STG, Air Cooled Condenser, and Balance-of-Plant Equipment

The CTGs, HRSGs, STG, and air cooled condenser will be supported at grade elevation on reinforced concrete mat foundations. The three step-up transformers and two auxiliary transformers are also supported at grade elevation on reinforced concrete mat foundations. Balance-of-plant mechanical and electrical equipment is supported at grade elevation on individual reinforced concrete pads. The concrete foundation design will be finalized as required by the final geotechnical report.

3.5.2 Stacks

Each HRSG will be provided with a self-supporting steel stack. The stacks will be approximately 19 feet in diameter and 175 feet tall. Each stack will include EPA sampling ports, ladders, side step platforms, and electrical grounding.

3.5.3 Buildings

Plant buildings include the Administration/Maintenance/Warehouse building (includes the control room), electrical power distribution centers, equipment shelter, covered general storage area, bulk storage building, water treatment building, and balance-of-plant mechanical and electrical equipment buildings or enclosures. Building columns will be supported on reinforced concrete mat foundations or individual spread footings. Ground floors will consist of reinforced concrete slabs. Thirty parking spaces will be provided on site to accommodate all employees and visitor vehicles.

3.5.4 Water Storage Tanks

Water storage tanks include a raw water/firewater storage tank with a nominal capacity of 400,000 gallons and a demineralized water storage tank with a nominal capacity of 200,000 gallons. Each water storage tank will be a fully enclosed, vertical, cylindrical, field-erected steel tank supported on a suitable foundation consisting of either a reinforced concrete mat or a reinforced concrete ring wall with an interior bearing layer of compacted sand supporting the tank bottom as required by the final geotechnical report.

3.5.5 Roads and Fencing

The power plant site will be accessed by a new 30-foot-wide, approximately 2,700-foot-long road extending from the existing PG&E Road Easement 295 or 442, as illustrated in Figures 3.3-1, 3.5-1, 3.5-2, and 3.5-4. The new road, plant perimeter road and parking areas, and miscellaneous access drives will be paved with asphalt.

Chain-link security fencing will be installed to include the power generation facility and the switchyard, and other areas requiring controlled access. Plant access will be via a remotely controlled slide gate.

In addition, ground disturbance along the existing PG&E easement road (Dirks Road) will be clearly marked during construction, and erosion control measures will be implemented to ensure that environmentally sensitive habitat, if present, is not affected. See Section 3.6.3, Offsite Roadway Improvements, for a description of offsite roadway improvements required for construction.

3.5.6 Sanitary Wastewater System

The sanitary wastewater system collects sanitary wastewater from sinks, toilets, and other sanitary facilities and discharges it to a septic tank served by a leach field. The leach field will be located on the southeastern corner of the site covering an area of about 3,000 square feet.

3.5.7 Site Drainage

The pre-construction site drainage is shown in Figure 3.5-1. The site grading and stormwater management and erosion control plans for permanent and temporary facilities are shown in Figures 3.5-2 and 3.5-3. The post-construction grading is also shown in Figures 3.5-2 and 3.5-3.

During construction activities, best management practices (BMPs), such as silt fences, straw bales, covered stockpiles, etc., will be used to minimize the potential for erosion and discharge of pollutants off the site. Stormwater runoff from the plant area and construction laydown area (approximately 63 acres) will be conveyed to a detention basin located near the southwestern portion of the site. This basin will be sized to allow sediments that may be carried in the runoff to settle and not be discharged off site. This temporary sediment basin would be converted to a permanent stormwater detention basin. A construction storm water pollution prevention plan (SWPPP) that includes temporary BMPs to be implemented during construction will be prepared in accordance with the National Pollutant Discharge Elimination System (NPDES) General Permit for Storm Water Discharge Associated with Construction Activities.

After construction is completed, the temporary construction areas will be returned to grazing land. The stormwater detention basin will be an unlined basin. The power facility area will be covered in gravel, except for designated roads, tanks, and building areas. Approximately 5 acres will be impervious (including buildings, roads, and tanks). The switchyard area will be covered with crushed rock. The proposed site drainage plan is shown on Figure 3.5-2. Stormwater runoff from the 31-acre plant area will be collected by a surface drainage system and conveyed to a 2.2-acre-foot stormwater detention basin. The basin will be designed to detain the difference in runoff before-construction (pre-development) and after-construction (post-development) conditions due to increased impervious area. The basin will also detain stormwater runoff to allow particles and associated pollutants to settle. The detention basin will be designed to accommodate the peak runoff of the pre-development condition resulting from a 10-year, 24-hour storm event and provide the required detention time for pollutant removal. The flow of stormwater will generally follow the existing drainage pattern.

A portion of the plant site will be curbed (e.g., equipment areas with the potential for leakage) and stormwater within these curbed areas will be collected and visually inspected, and then routed to the detention basin or to the oil/water separator and then to the detention basin. Design criteria for the site drainage system are provided in Appendix A, Civil Engineering Design Criteria. The drainage ditches will be designed to convey the 10-year, 24-hour rainfall runoff and will be protected by erosion control fabric, rip rap, concrete paving, or soil-cement to minimize erosion. As shown on Figure 3.5-5, the detention basin will be constructed with engineered earth dikes. A standpipe outlet structure will be used to regulate discharge from the basin. The outlet will be protected with rip rap, or other similar materials, to prevent erosion. The basin would be emptied within 48 hours or less after the cessation of a storm event to eliminate the potential for mosquito breeding. The outflow will be discharged back to the natural drainage of the area.

A construction storm water pollution prevention plan (SWPPP) that includes temporary BMPs to be implemented during construction will be prepared in accordance with the National Pollutant Discharge Elimination System (NPDES) General Permit for Storm Water Discharge Associated with Construction Activities. A SWPPP that describes the post-construction stormwater management system and best management practices to be implemented to prevent the discharge of pollutants off the site will be

prepared in accordance with the NPDES General Permit for Storm Water Discharge Associated with Industrial Activities.

3.5.8 Earthwork

Cut and fill will be required to provide a level area and noncompressible soils for the power generation facility and switchyard. The volume of cut and fill is estimated to be approximately 330,000 cubic yards.

Earthwork on the power plant site will consist of removal of topsoil, vegetation, and debris; excavation and compaction of earth to create the plant grade; and excavation for foundations and underground systems. Materials suitable for compaction will be stored in stockpiles within designated locations on the site using proper erosion prevention methods and then reused on site (e.g., plant power block). Materials unsuitable for compaction will be stored in separate stockpiles and reused on the site, where appropriate. Any contaminated materials encountered during excavation will be disposed in accordance with applicable laws, ordinances, regulations, and standards.

Compaction will be performed in uniform layers of specified thickness. Materials in each layer will be properly moistened to facilitate compaction to the specified density. To verify compaction, representative density and moisture content tests will be performed in the field during compaction. Structural fill material supporting foundations, roads, parking areas, etc., will be compacted. Prior to placing fill materials, subgrades will be examined for loose or soft areas and further excavated as necessary.

3.5.9 Ammonia Storage Facility

Operation of the SCR NO_X emission control system includes the use of aqueous ammonia, a solution consisting of water and 19 percent ammonia. This solution will be stored in the Aqueous Ammonia Storage Facility located on site, which will include a 20,000-gallon storage tank located within a dedicated concrete containment area and a tanker truck offloading facility located within a containment berm. The general design of the storage and receiving facility is shown on Figure 3.5-6.

As shown on the figure, the horizontally mounted storage tank will be placed in a containment basin. Below the containment basin is a containment sump sized to contain the entire volume of the tank and the rainfall that could collect within the containment over a 24-hour maximum recorded rainfall period (3.5 inches of rainfall recorded, WRCC, 1948-2005). This design specification assumes a worst-case failure event of complete rupture and drainage of the tank at the end of the worst 24-hour-long rainstorm. The underground containment sump will collect the spill, minimize the surface area of the spill, and limit volatilization of any spilled material.

Adjacent to the storage facility will be a tanker truck offloading facility to receive aqueous ammonia deliveries. The offloading facility will include a spill containment area to collect any ammonia solution spilled during offloading. Any offloading spills will be directed to the underground containment sump in order to minimize the surface area of the spill, and limit volatilization of any spilled material.

3.6 PROJECT CONSTRUCTION

Engineering, procurement, and construction (EP&C) of the CGS is estimated to take approximately 24 months. The project construction schedule, construction staff, and average frequency of vehicle traffic are detailed in the sections below.

3.6.1 Power Generation Facility

EP&C of the project is expected to ensue immediately upon receipt of certification. To ensure completion by the contractual deadline, some engineering and procurement may need to commence prior

to certification, at a considerable financial risk to E&L Westcoast. Onsite construction would commence no later than spring 2008, and would be completed prior to the contractual deadline in spring 2010, as shown in Figure 3.6-1. The schedule has been estimated on a single shift, 8-hour day, and 40-hour week. However, occasional use of a second shift and Saturdays may be necessary to make up schedule deficiencies or to complete critical construction activities. During the startup and testing phase of the project, some activities may continue 24 hours per day, 7 days per week. Construction operations are expected to take place between 6:00 a.m. and 6:00 p.m.

Projected construction staff by month is listed in Table 3.6-1 and shown on Figure 3.6-2. The estimated construction workforce is listed by trade in Table 3.6-1. The onsite workforce will consist of laborers, craftsmen, supervisory personnel, support personnel, and construction management personnel. The onsite workforce is expected to reach its peak of 669 individuals during the 14th month of construction. Construction access to the site will be via Delevan, McDermott, and Dirks roads. The estimated average number of construction staff (passenger) vehicle one-way trips per day is listed in Table 3.6-2; the estimated number of peak one-way trips is shown by month on Figure 3.6-3. The estimated average number of daily truck deliveries by heavy and light trucks is listed in Table 3.6-2. Figure 3.6-4 shows the estimated number of peak one-way truck trips. Truck deliveries will normally be on weekdays between 7:00 a.m. and 5:00 p.m. Estimates of the average and peak construction traffic during the onsite construction period are provided in Table 3.6-2.

3.6.2 Construction Plan

An EP&C contractor(s) will be selected for the design, procurement, and construction of the facility. The EP&C contractor(s) will select subcontractors for certain specialty work as required.

3.6.2.1 Mobilization

The EP&C contractor(s) will mobilize after project certification and the required letter authorizing the start of mobilization activities is received from the CEC Compliance Project Manager. Site preparation work will include site grading and stormwater control. Gravel will be used for temporary roads, laydown, and work areas.

3.6.2.2 Construction Offices, Parking, and Laydown Areas

Mobile trailers or similar suitable facilities (e.g., modular offices) will be used as construction offices for contractor and subcontractor personnel. Construction laydown and parking areas will be within designated construction areas shown on Figures 3.2-1 and 3.5-3. A separate sublease will be used as part of the agreement with the property owner to secure the additional area required for construction laydown. Site access will be controlled for personnel and vehicles. Temporary security fences will be installed around the construction laydown areas, along the new access road and existing PG&E road easement 295 official record 442.

3.6.2.3 Emergency Facilities

Emergency services will be coordinated with the local fire department and hospital. An urgent care facility will be contacted to set up nonemergency physician referrals. First-aid kits will be provided around the site and regularly maintained. One nurse and at least one person trained in first aid will be part of the construction staff. In addition, all foremen and supervisors will be required to have first-aid training. Fire extinguishers will be located throughout the site at strategic locations at all times during construction.

3.6.2.4 Construction Utilities and Site Services

During construction, temporary utilities will be provided for the construction offices, laydown area, and the project site. Temporary construction power will be utility-furnished. Area lighting will be provided and strategically located for safety and security.

Construction water will be supplied by the Glenn-Colusa Irrigation District via the Tehama-Colusa Canal for use at the project site. Average daily use of construction water is estimated to be about 8,000 gallons. The maximum daily water usage is estimated at 85,000 gallons during hydrotesting (not including the 5,000 gallons used during hydrotesting for the gas pipeline installation). The hydrotest water will be tested. If suitable for discharge, it will be routed to the stormwater detention basin. If the water quality is not suitable for discharge, it will be transported by trucks to an approved offsite disposal facility.

The following site services will be provided by the EP&C contractor:

- Environmental Health Safety Training
- Site Security
- Site First Aid
- Construction testing (NDE, Hydro, etc.)
- Site fire protection and extinguisher maintenance
- Furnishing and servicing of sanitary facilities
- Trash collection and disposal
- Disposal of hazardous materials and waste in accordance with local, state, and federal regulations

3.6.2.5 Construction Materials and Heavy Haul

Construction materials such as concrete, pipe, wire and cable, fuels, reinforcing steel, and small tools and consumables will be delivered to the site by truck.

Most of the heavy equipment and its components will be transported by rail to an existing rail spur at Delevan or Willows. Rail deliveries will be off-loaded and transported to the site by a heavy haul contractor. Estimated daily average and peak one-way truck trips are listed in Table 3.6-2; estimated peak trips by month are shown on Figure 3.6-4.

3.6.3 Offsite Roadway Improvements

Heavy-haul deliveries will require replacement of the Teresa Creek Bridge, Glenn-Colusa Canal Bridge, and widening of the shoulders at the eastern half of the intersection of Delevan Road and McDermott Road. At the completion of construction activities, Delevan Road from I-5 to McDermott Road, McDermott Road to Dirks Road, and Dirks Road to the plant access road will be repaved/resurfaced.

3.6.3.1 Replacement of Teresa Creek Bridge

The existing Teresa Creek Bridge is an older structure with a wood deck and will be replaced. The new bridge would be a clear span bridge (see Figure 3.6-5) or a prefabricated bridge approximately 75 feet in length. One of two options for replacement is likely, depending on schedule. The first option is to install a temporary 14-foot-wide bridge and detour road immediately downstream of the existing bridge prior to construction of the new bridge. The temporary bridge would include a culvert and backfill to the existing grade, or would be designed to span the creek bed with supports on each side and away from the edge of the creek slope. After the temporary bridge is installed and operational, the permanent replacement bridge would be erected as described above. After the permanent bridge has been constructed, the

temporary bridge and access road would be removed and all disturbed areas returned to pre-project conditions.

The second option would be to replace the bridge as the first scheduled construction event, and detour traffic from McDermott Road between Delevan Road and Dirks Road. This detour would reroute traffic on either I-5 or 99-W to the Road 68 exit north of the Delevan Road exit, west on Road 68 and south on McDermott Road.

3.6.3.2 Glenn-Colusa Canal Bridge Replacement

The existing Glenn-Colusa Canal Bridge located at the end of Dirks Road was built in 1965 to support the construction of the PG&E Delevan Gas Compressor Station. This bridge is a four-span concrete-decked structure that is 74 feet long by 20 feet wide. The bridge provides weight-limited one-way truck traffic and speed-limited two-way automobile traffic (due to the reduced lane width of 8 feet) with 2-foot shoulders. The bridge was originally designed for a 40-ton load, but is currently AASHTO rated H-20, which is a 20-ton load.

The new bridge will be a free-span steel beam and concrete bridge (see Figure 3.6-6) approximately 100 feet long by 30 feet wide. This would provide for two 12-foot lanes with 3-foot shoulders giving unimpeded two-way traffic flow, rated for the heaviest equipment for the plant, and will exceed HS-20 rating per AASHTO standards. No piers will be constructed in the canal to support the bridge. The east approach will be located approximately 20 feet north of the existing bridge and the west approach will be located about 40 feet north. The bridge will be fitted with side guard rails and will be striped to permit safe passage of traffic. The new bridge would be capable of handling the heaviest loads required for the construction and operation of the power plant, without any other temporary modifications.

The bridge deck will be replaced in time to accommodate the heavy haul equipment entering the site. The existing bridge would be used for initial construction mobilization site access while the new bridge is being installed. The new bridge would be constructed to minimize embankment impacts, and would not intrude into the water. The access road on both sides will be realigned to straighten and widen the approaches to allow for unimpeded two-way traffic.

The existing bridge will be left in place, or the deck may be removed. The original approaches would be final-graded to match the surrounding land contours and seeded with grass native to the region.

All disturbed areas will be returned to pre-project conditions after construction is complete.

3.6.3.3 Widening of Delevan/McDermott Intersection

To accommodate the wide-turning radius of some heavy-haul trucks, the northeastern and southeastern corners of the intersection of Delevan Road and McDermott Road will be widened by grading and placement of gravel around these corners. Grading will occur up to the area between the existing pavement and the concrete abutment to the irrigation canal. No modifications of the irrigation canal are proposed. Grading will require relocation of the stop sign and telephone conduit box at the northeastern corner of the intersection.

3.6.3.4 Tehama-Colusa Canal Access Road

A permanent 12-foot-wide dirt road will be constructed along the pipeline conveying water from the Tehama-Colusa Canal to the power plant (Figures 3.2-1 and 3.3-1). The road will be used for maintenance and access to the water intake at the Tehama-Colusa Canal.

3.6.4 Construction Land Disturbance Area

The power plant site and vicinity are currently unoccupied agricultural land used for grazing. The project will include construction of a new power generating facility, switchyard, and associated linear facilities. These facilities will occupy approximately 34.5 acres. During construction of these facilities, approximately 97 acres will be temporarily disturbed, including a 43-acre construction office, parking, and laydown area. Approximately 62.5 acres of the 97 acres disturbed will be returned to pre-construction conditions. Estimated areas of land disturbance during construction and operation of the plant are shown in Table 3.6-3.

In addition, the project will include construction of a new free-span bridge across the Glenn-Colusa canal, a new bridge across Teresa Creek, and improvements to the intersection of Delevan Road and McDermott Road. Estimated areas of disturbance, both temporary and permanent, associated with these improvements are summarized in Table 3.6-3.

The CGS will implement the following fugitive dust control measures during construction at the project site to minimize the formation of fugitive dust:

- Frequent watering of unpaved roads and disturbed areas (at least twice a day). Frequency of watering will be increased when wind speeds exceed 15 miles per hour (mph).
- Limit speed of vehicles within construction areas to no more than 10 mph.
- Sweep paved interval roads after the evening peak period.
- Sweep public roadways adjacent to the project site that are used by construction and worker vehicles at least twice a day.
- Treat the entrance roadways to the construction site with soil stabilization compounds.
- Place sandbags adjacent to roadways to prevent runoff to public roadways.
- Install windbreaks at the windward sides on construction areas prior to soil being disturbed. The windbreaks shall remain in place until the soil is stabilized or permanently covered.
- Replace ground cover in disturbed areas as quickly as possible.
- Employ tire washing and gravel ramps prior to entering a public roadway to limit accumulated mud and dirt deposited on public roadways.
- Cover all trucks hauling dirt, sand, soil, or other loose materials and maintain a minimum of 6 inches of freeboard between the top of the load and the top of the trailer.
- Limit equipment idle times (no more then 15 consecutive minutes).
- Use electric motor-driven construction equipment when feasible.
- Apply covers or dust suppressants to soil storage piles and disturbed areas that remain inactive for more than two weeks.
- Pre-wet soil to be excavated during construction.

- Designate a person to oversee the implementation of the fugitive dust control program.

As discussed in Section 8.1, the fugitive dust mitigation measures listed above are expected to control more than 90 percent of the fugitive dust that occurs during onsite construction.

The project will also employ oxidizing soot filters on all large suitable off-road construction equipment with an engine rating of at least 100 brake horsepower (bhp).

Many, but not all of the control measures listed above will be used during the construction of the transmission line. Not all apply, e.g., tire washing before entering a public roadway. Even though control efficiency is expected to be higher than this, to be conservative 50 percent efficiency was used to estimate fugitive dust emissions during construction of the transmission line.

Following completion of construction, grassland areas outside the project's permanently disturbed areas will be restored. In laydown areas where topsoil has been removed and crushed rock (gravel) placed for construction, the rock material will be removed, compacted soils loosened, and stockpiled topsoil replaced. Disturbed areas to be restored will be reseeded with appropriate native plants.

3.7 STARTUP AND COMMISSIONING

During startup, all pre-operational system checks, cleaning of systems, check out and testing of all instrumentation and control devices and systems, performance of initial operation, run in of all plant equipment, and startup of the integrated facility will be performed. During startup, E&L Westcoast's plant operation and maintenance (O&M) personnel will assist with equipment operations.

Project-specific procedures will be completed by using administrative and technical startup procedures (using standard procedures as a base), good industry and engineering practices, and project specific requirements. All startup activities will be coordinated with E&L Westcoast on a daily basis, the equipment/systems subcontractors, and utility representative, as appropriate, regarding startup requirements and operations of the facility.

Startup and testing of the 230 kV switchyard, down to the high side of the incoming transformers, shall be compatible with the requirements of the connecting utility.

The startup manager will provide overall coordination of the startup program from mechanical completion of construction through initial operation until substantial completion, liaising with E&L Westcoast's plant O&M personnel with regard to the scheduling of fuel consumption and power production. Until substantial completion, the startup manager will have care and custody of the facility.

During commissioning, the plant permanent components and systems will be systematically tested, including verifying safety interlocks and controls. Standard commissioning procedures, incorporating the necessary contractual and permit requirements, and other official project documentation will be used to complete the system procedures. The commissioning manager, which may be the startup manager, will have care and custody of the plant until commissioning completion. Until the plant has completed all acceptance testing, it is owned and controlled by E&L Westcoast. Once the plant is ready for commercial operation, PG&E will take ownership.

3.8 FACILITY OPERATION

The power plant operation will be controlled and monitored by highly trained technicians during each operating shift. In addition, support and supervisory personnel will generally be present during the day shift Monday through Friday and, as required, by specific operations or maintenance activities. Plant operation will require approximately 31 full-time permanent personnel (Table 3.8-1) with up to 16

employees during the day shift. The plant will be operated 7 days a week, 24 hours a day. When the plant is not operating, personnel will be present as necessary for maintenance and to prepare the plant for startup.

In any given hour, the plant may be operating at peak load, base load, or part load with both CTGs or with one CTG running. Peak load operation will most likely occur during summer on-peak hours, and minimum load operation during nonsummer off-peak hours. Shutdown periods for annual maintenance will be scheduled during extended periods of low demand, which typically occur in the winter or early spring.

Ancillary services will also be provided by the plant. These services include regulation, operating reserves to the extent the plant is not operating at full load, and reactive power production. Black start capability will not be provided.

3.9 SAFETY AND RELIABILITY

3.9.1 Facility Safety

The CGS will be designed for safe operation. Potential hazards that could affect project facilities include earthquake, flood, and fire. Safe operation includes safety for the power plant operating personnel, who will be trained to provide proper response to hazards and to avoid unsafe operating conditions.

3.9.1.1 Natural Hazards

A geotechnical investigation of the proposed power plant site is provided in Section 8.15, Geologic Hazards and Resources. This investigation includes a review of potential geologic hazards, seismic ground motion, and soil liquefaction. The principal natural hazard associated with the power plant site is potential seismic hazard. The site is located in Seismic Zone 3. All project structures will be designed in conformance with California Building Code criteria for Seismic Zone 3 to ensure safety for operating personnel and adequate protection against structural and equipment damage. The structural and seismic design criteria for project buildings and equipment is provided in Appendix B.

The power plant site varies in elevation from approximately 170 feet above msl to 190 feet above msl. The high point finished surface of the plant permanent facilities will be at approximately 183 feet above msl, as shown on Figure 3.5-2.

3.9.1.2 Onsite Fire Protection Systems

The power plant will be provided with onsite fire protection systems to limit personnel injury, property loss, and plant downtime resulting from a fire. The fire protection systems are described in Section 3.4.10. The facility will have a Fire Protection Plan as outlined in Section 8.7, Worker Safety and Health.

3.9.1.3 Local Fire Protection Services

In the event of a serious fire, the CGS will receive fire protection services from the nearest fire station located at Maxwell, approximately 5 miles from the project site. The project's Risk Management Plan described in Section 8.12, Hazardous Materials Handling, will provide necessary information on hazardous materials to ensure that safe and effective fire fighting measures are used. Additional information on local emergency services can be found in Section 8.8, Socioeconomics.

3.9.1.4 Personnel Safety Programs

The CGS will implement the personnel safety programs described in Section 8.7 to provide for personnel safety and ensure compliance with federal and state occupational safety and health requirements.

3.9.2 Transmission Line Safety

3.9.2.1 Transmission Lines

Four double circuit lines (approximately 2,000 feet) will connect the CGS switchyard with the existing PG&E transmission lines. The transmission interconnection will require approximately 12 new towers and 48 new tower footings. Four of the towers (16 footings) will be within the project site; eight of the towers (32 footings) are estimated to be outside of the 100-acre site and construction laydown area. The new transmission line structures will be approximately 100 to 125 feet in height. Four existing towers will need to be refitted and two towers will be removed. The final configuration will be determined by PG&E.

3.9.2.2 Audible Noise and Radio and Television Interference

When a transmission line is in operation, an electric field is generated in the air surrounding the conductors, forming a corona. Coronas result from the partial breakdown of the electrical insulating properties of the air surrounding the conductors. When the intensity of the electric field at the conductor surface exceeds the insulating strength of the surrounding air, a corona discharge occurs at the conductor surface. Corona discharge represents a small dissipation of heat and energy. Some of the energy may dissipate in the form of small local pressure changes that result in audible noise or in the form of a discharge that results in radio or television interference. Audible noise generated by corona discharge can be characterized as a hissing or crackling sound which, under certain conditions, is accompanied by a 120-Hertz hum.

The conductors of high-voltage transmission lines are designed to be free of corona under ideal conditions. However, slight irregularities or water droplets on the conductor surface accentuate the electric field strength near the conductor surface, making corona discharge and the associated audible noise more likely. The Electric Power Research Institute (EPRI, 1978, 1987) has conducted several studies of these effects. Typical noise levels for transmission lines with wet conductors are presented in Table 3.9-1.

During rainfall, the proposed transmission line will produce corona discharge noise levels roughly equivalent to those found inside a residence at night, and the transmission line noise will be largely masked by the noise of the rain. The maximum noise levels are encountered directly under the transmission line, where levels are estimated to be approximately 40 A-weighted decibels during rainfall. Since the nearest residence is approximately 1.5 mile from the transmission line tie-ins, the addition of the 230 kV interconnecting loop will have no significant noise impacts and should not cause any radio or television interference.

3.9.2.3 Electromagnetic Fields

Whenever electricity is used or transmitted, electric and magnetic fields are created by the electric charges. Electric charges of opposite sign attract each other, while those of the same sign repel each other. These forces of attraction and repulsion — when not moving — create electric fields. The strength of these fields is related to the voltage in the circuit. Once electric charges are in motion they create magnetic fields. The strength of the magnetic field is proportional to the magnitude of the current in the circuit. The strength of the electric and magnetic fields generally falls off rapidly with distance from the source.

The voltage, electric, and magnetic field strengths induced by high-voltage transmission lines are provided in the *EPRI Transmission Line Reference Book – 345 kV and Above* (EPRI, 1987). The maximum electric field strength for a 230 kV line would be on the order of 1.32 kilovolts per meter (kV/m) to 1.70 kV/m. These values are the maximum, unperturbed fields calculated at 1 meter above the ground directly under the line and at the edge of the rights-of-way. For a typical 95-foot pole with 800-foot span, the maximum calculated magnetic field strength directly under the line and at the edge of the 60-foot right-of-way is 73 milligauss (mG) and 44 mG, respectively. While California does not have a regulatory limit for magnetic field strength, these values are well below the levels established by those states that do have regulatory limits. States with magnetic field regulations have limits ranging from 150 mG to 250 mG at the edge of the rights-of-way, depending on line voltage. Average values reported to the CEC, for 230 kV transmission lines licensed by the CEC have been less than 100 mG (CEC, 1992).

3.9.2.4 Induced Voltage and Current

Hazardous shocks could be caused by a high-voltage transmission line, if it is not properly constructed. The 230 kV interconnecting lines constructed for this project will be built in conformance with California Public Utilities Commission (CPUC) General Order 95 (GO-95) and California Code of Regulations (CCR), Section 2700 requirements, and therefore hazardous shocks are unlikely to occur as a result of the project operation.

Nuisance shocks can be caused by touching ungrounded metallic objects under or near a transmission line. Assuming a large object remains under the 230 kV generation tie line for a lengthy period of time (e.g., a parked farm tractor, or other ungrounded platform) and also assuming the maximum value of electric field, the induced short-circuit currents would be negligible. Any permanent metal object, such as a metallic fence built near the transmission line, will be grounded.

The 230 kV interconnecting lines will be constructed in accordance with National Electric Safety Code (NESC) requirements, including the provisions for proper grounding of structures. The NESC requirements are intended to minimize the potential for direct or indirect contact with energized lines; therefore, no significant transmission line impacts will occur to the public.

3.9.2.5 Fire Prevention

The CGS will comply with Title 14, CCR, Section 1250, Article 4, which establishes fire prevention standards for electric power generation facilities.

3.9.3 Reliability and Availability

This section discusses plant reliability and availability, equipment redundancy, fuel availability, water availability, and project quality control measures.

3.9.3.1 Plant Reliability and Availability

The planned operational life of the project is 30 years. For this life to be realized, and for the plant to operate reliably, a preventative maintenance program will be implemented for the project. This program will begin during engineering and procurement for the project, when designs and specifications will be reviewed for reliability and maintainability of plant systems and equipment. During the operational phase of the project, the preventative maintenance program will consist of monitoring, record keeping, and maintenance work to detect and rectify deterioration in systems and equipment before such deterioration results in a forced outage or prolonged maintenance outage.

It is expected that the preventative maintenance program will result in high plant availability. Plant availability refers to the plant's available generating capability during a given period of time, and is

assessed using the Equivalent Availability Factor (EAF). The EAF is a weighted average measure of plant availability considering both full and partial outages. In determining the EAF, outages are weighted by magnitude (i.e., fractional reduction in available generating capacity) and duration. Outages consist of planned overhauls, maintenance outages, and forced outages. The plant's annual EAF is expected to be in the range of 92 to 96 percent.

3.9.3.2 Equipment Redundancy

The following subsections identify equipment redundancy as it applies to project availability. Equipment redundancy provides means for avoiding outages and reducing the magnitude of outages. For example, because the plant will include two auxiliary cooling water pumps that each have 100 percent capacity, an outage of a single pump would not result in a plant outage. As another example, because the air cooled condenser will consist of multiple cells, loss of one fan would result in a minor partial outage (i.e., minor reduction in available generating capacity) rather than a full outage. Redundancy of major equipment is shown in Table 3.9-2. Note that some elements may be subject to modification in final design.

3.9.3.3 Combined Cycle Power Block

Two separate combustion turbine generator/HRSG trains will operate in parallel within the combined cycle power block. Each combustion turbine generator/HRSG train will provide approximately 30 to 35 percent of the combined cycle power block output. The heat input from the exhaust gas from each combustion turbine will be used in the HRSG to produce steam. Heat input to each HRSG can be supplemented by firing the HRSG duct burners, which will increase steam generation, resulting in an increase in plant electrical output. Thermal energy in the steam from the HRSG will be converted to mechanical energy and ultimately into electrical energy in the steam turbine generator. The expanded steam from the steam turbine generator will be condensed and recycled to the feedwater system. Power from the steam turbine generator will contribute approximately 30 to 40 percent of the total combined cycle power block output.

Major components of the combined cycle power block consists of the following subsystems:

- CTG: The combustion turbine generator subsystems include the combustion turbine, inlet air filtration and evaporative cooling system, generator and excitation systems, and turbine control and instrumentation. The combustion turbine will produce thermal energy through the combustion of natural gas and conversion of the thermal energy into mechanical energy through rotation of the combustion turbine, which drives the compressor and generator. Exhaust gas from the combustion turbine will be used to produce steam in the associated HRSG. The generator will be hydrogen cooled. The generator excitation system will be a solid state static system. Combustion turbine control and instrumentation (interfaced with the DCS) will cover the turbine governing system, the protective system, and sequence logic.

- HRSG: The HRSG subsystems consist of the HRSG and blowdown systems. The HRSG system provides for the transfer of heat from the exhaust gas of a combustion turbine and from supplemental combustion of natural gas in the HRSG duct burners for the production of steam. This heat transfer produces steam at the pressures and temperatures required by the steam turbine generator. Each HRSG system consists of ductwork, duct burners, heat transfer sections, an SCR system and an oxidation (CO) catalyst module. The blowdown system provides drains for each HRSG boiler drum. The system includes a continuous and intermittent blowdown drum for each HRSG to control boiler feedwater quality.

- STG: The steam turbine generator converts the thermal energy in the steam to mechanical energy to drive the generator. The basic subsystems include the steam turbine and auxiliary system, turbine lube oil system, generator, and generator exciter system. The generator will be hydrogen cooled.

- Boiler Feedwater: The boiler feedwater system transfers feedwater from the LP drum to the HP and IP sections of the HRSGs. The system consists of two 100 percent boiler feed pumps per combustion turbine generator/HRSG train. The pumps are multistage, electric motor-driven with intermediate bleed-off, and have regulating control valves, minimum flow recirculation control and other associated piping and valves.

- Condensate: The condensate system provides a flow path from the air cooled condenser to the HRSG LP steam drums. The condensate system includes three 50 percent capacity, motor-driven condensate pumps.

- Air cooled condenser: A 45-cell air cooled condenser provides for the ultimate removal of the heat.

Balance of Plant Systems include:

- Distributed Control System: The DCS (sometimes referred to as Integrated Control System or KS) will be a redundant microprocessor-based system, which will provide control, monitoring, and alarm functions for plant systems and equipment. Redundancy will be such that no single processor failure can cause or prevent a unit trip. The DCS will interface with the control systems furnished by the combustion turbine generator and steam turbine generator suppliers and the existing water treatment system to provide remote control capabilities, as well as data acquisition, annunciation, and historical storage of turbine and generator operating information. Plant operation will be controlled from the operator panel, which will be located in the control room. The operator control panel will consists of individual CRT/keyboard consoles and an engineering workstation.

- Demineralized Water System and Power Cycle Makeup: The demineralized water system is designed to provide demineralized water for the power cycle makeup on a continuous basis. A storage tank provides additional demineralized water capacity for 48 hours in the event that the demineralized water system is down.

- Auxiliary Cooling Water System: The auxiliary cooling water system provides cooling water from the fin fan heat exchanger to the closed cooling water (CCW) heat exchangers. The CCW system provides heat rejection for all of the plant auxiliary systems, including combustion turbine and steam turbine generators, hydraulics and lube oil subsystems, boiler feedwater pumps, steam and water sampling system. The water is then returned to the auxiliary cooling water fin fan heat exchanger for cooling. Major components for this subsystem include auxiliary cooling water fin fan heat exchanger, two 100 percent, motor-driven pumps, and associated piping and valves.

- Compressed Air: The compressed air system is comprised two 100 percent skids containing the instrument air and service air subsystems. The service air subsystem has one compressor, service air headers, and distribution piping and hose connections. The instrument air subsystem supplies dry compressed air at the required pressure and capacity for all control air demands, including pneumatic controls, transmitters, instruments, and valve operators. The instrument air system will include two redundant

compressors with prefilters and after filters, instrument air headers, and distribution piping.

3.9.3.4 Power Plant Maturation

The anticipated maturation period of CGS will range between 6 and 9 months. The plant's first year EAF is estimated to be 92 to 96 percent. Functional testing, performance testing, punchlist resolution, reliability runs, and warranty claims will accelerate the maturation process, as well as extensive quality assurance and control during the commission and startup of the facility.

3.9.3.5 Commercially Proven Technology

Facility design utilizes commercially proven technologies from major equipment suppliers, including General Electric combustion turbines. These frame turbine designs are used throughout the world in this application. Steam turbine design has been proven for several decades and is well known for excellent reliability.

3.9.3.6 Special Design Features

The environmental setting of the CGS site is optimal for a power plant. The site is situated just west of existing PG&E transmission lines and natural gas pipelines, with the nearest residences located approximately 1.7 miles from the site. The project will use 126 acre-feet of water per year. Although incurring significant capital expenditure and performance impacts, the use of an air cooled condenser greatly reduces the water requirements compared to a mechanical draft cooling tower. The corresponding wastewater reduction allows incorporation of a zero liquid discharge system. The major component of the zero liquid discharge system is the dryer, which has minimal operational and maintenance constraints. Water requirements and wastewater generation are also reduced by recycling. The RO reject water is sent to the zero liquid discharge evaporator, the evaporator distillate is captured and sent back to the demineralizer system for reuse in the steam cycle as makeup water. In addition, the project will use an auxiliary boiler with superheaters to maintain steam turbine seals during overnight and weekend shutdowns.

3.9.3.7 Fuel Availability

The project will be fueled with pipeline-quality natural gas delivered by PG&E. Gas supplies will be acquired from gas providers in supply regions accessible through the PG&E gas transmission system. Over the life of the project it is expected that a variety of different suppliers will contract to provide the gas commodity to the PG&E system for transport to the project site. Gas will be provided at market prices. Natural gas will be supplied to the power plant site via a new 8-inch, 1,500-foot-long line connected to the high-pressure interstate gas main. The 8-inch line will tap into the gas main at the north end of PG&E's Compressor Station. The gas delivery pressure at this location is expected to be 545 to 855 pounds psig, which will adequately serve the power plant needs under all operating conditions. The availability of fuel gas will be high as its supply will be only interrupted (a remote possibility) during outage of the interstate gas transmission line.

3.9.3.8 Water Availability

Water will be supplied by the GCID via the Tehama-Colusa Canal. Water will be continuously available as described in Chapter 7, Water Supply. Normal operating plant water requirements amount to approximately 126 acre-feet per year, as presented in Table 3.4-4. Water will be supplied to the generating facility by a new 2,700-foot pipeline.

At the power plant site, a raw water storage tank with a nominal capacity of 400,000 gallons will hold 61,000 gallons of water for plant operation. This quantity is sufficient to satisfy 8-hour plant operation at summer peak conditions in case of water supply interruption. In addition, 300,000 gallons will be dedicated to the plant's fire protection water system and any excess water in the tank will be for plant usage.

3.9.3.9 Project Quality Control Measures

Suppliers and contractors providing equipment and services to the project will be required to implement quality control measures. This requirement will apply to the engineering, procurement, construction, and startup phases of the project. It is expected that such measures will be part of quality assurance programs established by the suppliers and contractors. The project will audit the quality assurance programs, and will also supplement the programs with independent design reviews, shop inspections, and construction site inspections.

3.9.4 Applicable Laws, Ordinances, Regulations and Standards Related to Safety and Reliability

Design, construction, and operation of the CGS including transmission lines, pipelines, and ancillary facilities will be conducted in accordance with all LORS pertinent to facility safety, transmission line safety and nuisance, and reliability and availability. The applicable LORS are discussed in the following sections.

3.9.4.1 Power Plant Reliability

The following LORS are applicable to the proposed CGS in the context of power plant reliability and availability, which are addressed in Section 3.9.3.

3.9.4.1.1 Industry Codes and Standards

Currently, there are no industry codes or standards that govern power plant reliability; however, there are trade organizations and associations that are generally recognized as authorities and leaders in the field of power plant availability and reliability. Definitions used by these organizations have become generally accepted as a common means of communicating and the data published have been found to be useful. The organizations are:

- The Electric Power Research Institute (EPRI): Copies of reports can be obtained from the Research Reports Center:

  3412 Hillview Avenue
  Palo Alto, California 94304-1395
  (650) 855-2000

- North American Electric Reliability Council (NERC):

  Princeton Forrestal Village
  116-390 Village Boulevard
  Princeton, New Jersey 08540
  (609) 452-8060

3.9.4.1.2 CGS Compliance with Power Plant Reliability LORS

As further described in Section 3.9.3, the CGS will be designed for reliable operations for an expected project life of 30 years. To create and maintain reliable operations, the CGS will include a maintenance program, equipment redundancy, dependable fuel source, and water supply.

Efficiency. CEQA requires a power plant or other new project to not waste energy. CEQA also requires the project to be more efficient in energy use than alternatives to the project. CEC is the administering agency.

3.9.4.2 Transmission Line Safety

3.9.4.2.1 Federal Authorities and Administering Agencies

47 USC § 15.25. This authority requires mitigation for any device that causes communications interference.

The administering agency for the above authority is the Federal Aviation Administration.

3.9.4.2.2 State Authorities and Administering Agencies

California Public Resources Code §25000 *et seq.*, Warren-Alquist Act, §25520 Subdivision (g). Requires a detailed description of the transmission line, including all rights-of-way.

The administering agency for the above authority is the CEC.

General Order 52(GO-52) CPUC. Requires the prevention or mitigation of any inductive interference causes by the transmission lines.

The administering agency for the above authority is the California Public Utilities Commission (CPUC).

General Order 95 (GO-95) CPUC. Establishes rules and guidelines for transmission line construction.

The administering agency for the above authority is the CPUC and CEC.

3.9.4.2.3 Local Authorities and Administering Agencies

Colusa County. The Colusa County General Plan describes general policies regarding energy development in the county.

The administering agency for the above authority is the Colusa County Planning and Community Development Department.

3.9.4.2.4 Industry Codes and Standards

Radio and Television Interference (RI/TVI) Criteria. Criteria are established to determine whether any mitigation is necessary.

The administering agency for the above authority is the CEC.

3.9.4.2.5 CGS Compliance with Transmission Line Safety LORS

CGS' compliance with audible noise, communication interference and hazards are fully described in Chapter 5.

3.10 APPLICABLE LAWS, ORDINANCES, REGULATIONS AND STANDARDS (LORS)

LORS applicable to the proposed project are shown in Table 3.10-1. Please note that the design of all structures and facilities will be based on building codes, specifications, industry standards and regulations. All designs and construction methods will be in accordance with the LORS that are in effect at the time that building plans are first submitted to the Chief Building Official for review and approval. All building permits will be reviewed during the building permit approval process by Colusa County.

3.10.1 Engineering Geology

Unless specifically stated otherwise, the design of all structures and facilities will be based on the laws, ordinances, codes, specifications, industry standards and regulations, and other reference documents in effect at the time of design. Applicable codes and industry standards with respect to the project's engineering geology are summarized in sections of Appendix A, Foundations and Civil Engineering Design Criteria, and Appendix B, Structural and Seismic Engineering Design Criteria.

3.10.2 Civil and Structural Engineering

Unless specifically stated otherwise, the design of all structures and facilities will be based on the laws, ordinances, codes, specifications, industry standards and regulations, and other reference documents in effect at the time of design. Applicable codes and industry standards with respect to the project's engineering design criteria, construction and operation are summarized in Appendix A, Foundations and Civil Engineering Design Criteria, and Appendix B, Structural and Seismic Engineering Design Criteria.

3.10.3 Mechanical Engineering

Unless specifically stated otherwise, the design of all structures and facilities will be based on the laws, ordinances, codes, specifications, industry standards and regulations, and other reference documents in effect at the time of design. Applicable codes and industry standards with respect to the project's mechanical engineering design criteria, construction, and operation are summarized in Appendix C, Mechanical Engineering Design Criteria. Applicable sections of Appendix D, Control Systems Engineering Design Criteria, will also be considered.

3.10.4 Electrical and Control Systems Engineering

Unless specifically stated otherwise, the design of all structures and facilities will be based on the laws, ordinances, codes, specifications, industry standards and regulations, and other reference documents in effect at the time of design. Applicable codes and industry standards with respect to the project's electrical engineering design criteria, construction and operation are summarized in Appendix E, Electrical Engineering Design Criteria. Applicable sections of Appendix D, Control Systems Engineering Design Criteria, will also be considered.

3.10.5 Seismic Design

The CGS site is located in Seismic Risk Zone 3. Structures, their foundations, and equipment will be designed in accordance with the 2003 International Building Code, 2003 California Building Code and the Colusa County Building Code (Colusa County, 2000). Where there are conflicts in the requirements of these codes, the most conservative requirements will govern. Involved Agencies and Agency Contacts

3.11 INVOLVED AGENCIES AND AGENCY CONTACTS

Agency contacts regarding facility design of the CGS are shown below.

Agency	Contact/Title	Telephone
Colusa County Department of Public Works 1215 Market Street Colusa, CA 95932	Jon Wryzinski, Assistant Director	(530) 458-0466
Colusa County Department of Planning and Building 220 12th Street Colusa, CA 95932	Steve Hackney, Director	(530) 458-0480
Caltrans 703 B Street Marysville, CA 95901	Michael Forga, Chief, Office of Special Funded Projects	(530) 741-5456
Colusa County Air Pollution Control District 100 Sunrise Boulevard, Suite F Colusa, CA 95932-3246	Harry Krug, Director of Air Quality Standards	(530) 458-0590
U.S. Environmental Protection Agency 75 Hawthorne Street San Francisco, CA 94105	Gerardo Rios, New Source Review Section	(415) 744-1254
California Energy Commission 1519 Ninth Street Sacramento, California 95814	Eileen Allen, Siting Project Manager	(916) 654-4082
California Department of Fish and Game, Region 2 1701 Nimbus Road, Suite A Rancho Cordova, CA 95670	Dan Gifford, Wildlife Biologist	(916) 358-2900 (209) 369-8851
Colusa County Department of Environmental Health 251 E. Webster Street Colusa, CA 95932	Rob Kostlivy	(530) 458-0395
State of California, Central Valley Regional Water Quality Control Board 11020 Sun Center Drive #200 Rancho Cordova, CA 95670-6114	Jacque Kelley	(916) 464-4764
California Department of Occupational Health and Safety (District Office) 2424 Arden Way, Suite 410 Sacramento, CA 95825	Richard DaRosa, Area Manager, Consultation	(916) 263-0704

Agency	Contact/Title	Telephone
California Department of Occupational Health and Safety (Redding Office) 381 Hemsted Dr. Redding, CA 96002	Dennis Barker, Area Manager, Compliance/Permits	(530) 224-4743
U.S. Bureau of Reclamation 1140 West Wood Street P.O. Box 988 Williams, CA 95988	Donald A. Bultema, Chief	(530) 934-1361
California Department of Fish and Game 1416 Ninth Street, 13th Floor Sacramento, CA 95814	Duane Massa, Fisheries Biologist	(916) 358-2883
Glenn-Colusa Irrigation District 344 East Laurel Street Willows, CA 95988	Bill Menke, P.E., General Manager	(530) 934-8881

3.12 REFERENCES

CBC (California Building Code). 2003. Title 24 (Part 2) of the California Code of Regulations.

CEC (California Energy Commission). 1992. High Voltage Transmission Lines, Summary of Health Effects Studies. July 1992.

Colusa County. 2000. Building Code, Chapter 5 of Colusa County Code.

DeBerry, Donald, Sacramento Municipal Utilities District. 2006. Personal communication with K. Rushmore of URS Corporation. September 25.

EPRI (Electric Power Research Institute). 1978. Transmission Line Reference Book, 115-138 kV.

EPRI (Electric Power Research Institute). 1987. Transmission Line Reference Book, 345 kV and Above. Second Edition.

Larsen, Dave, Navigant Consulting. 2006. Personal communication with K. Rushmore of URS Corporation. August 22.

Marki, Tom, PG&E. 2006. Personal communication with K. Rushmore of URS Corporation. August 1.

Mirzadeh, Mariam, Western Area Power Administration. 2006. Personal communication with K. Rushmore of URS Corporation, June 19.

Navigant Consulting. 2005. System Impact Study, Generation Interconnection. CPV Colusa Project. September 19.

PG&E (Pacific Gas and Electric Company), 2006a. Facilities Study Report, Generation Interconnection, CPV Colusa Project. February 28.

PG&E (Pacific Gas and Electric Company), 2006b. Gas System Sulfur Survey Results. http://www.pge.com/pipeline/operations/sulfur/sulfur_info.shtml#survey_results. Accessed October 31.

WRCC (Western Regional Climate Center). 1948-2005. Climate Historical Summaries, Daily Records for Station 041948, Colusa 2 SSW.

Table 3.4-1
Heat and Material Balance Case Descriptions

Case	Description	Ambient Temperature, °F	Relative Humidity, percent	Duct Fire Status	Evap. Cooler Status
1	July Peak	94	25.4	On	On
2	ISO	59	60	On	Off
3	ISO	59	60	Off	Off
4	ISO, minimum	59	60	Off	Off

Table 3.4-2
Major Mechanical Equipment

Equipment	Qty	Size/Capacity	Service/Remarks
Combustion Turbine Generators (CTGs)	2	GE 7FA	DLN combustion control with inlet air evaporative coolers
Steam Turbine Generator (STG)	1	320 MW	Condensing Reheat STG
Heat Recovery Steam Generators (HRSGs)	2	1,800 psig HP Steam	Three pressure w/ reheat and supplemental duct firing
Auxiliary Boiler	1	44 mm Btu/hr	Natural gas fired for startup
Aqueous Ammonia Storage	1	20,000 U.S. gal, each	NO_X control (19 wt percent ammonia solution)
Hydrogen Storage tank	1	1,500 gallons (liquid volume)	Generator cooling gas
SCR Catalyst	2		NO_X control
Oxidation Catalyst	2		VOC and CO Control
HRSG Stacks	2	19 ft dia × 175 ft high	Includes silencers
Continuous Emissions Monitoring System (CEM)	2		NO_X, CO and O_2
HP/IP Boiler Feedwater Pumps	4	2,100 U.S. gpm each	HP/IP feed (2 × 100 percent per HRSG)
Air cooled condenser	1	1,930 mm Btu/hr	45 cells (estimated) 2 speed fans
Condensate Pumps	3	1,900 U.S. gpm each	Horizontal (3 × 50 percent capacity)
Auxiliary Cooling Water Pumps	2	8,600 U.S. gpm each	All auxiliary cooling water system heat loads, including generator and lube oil cooling (2 × 100 percent capacity)
Auxiliary Cooling Water Heat Exchanger	1	65 mm Btu/hr	18 cells (estimated) 1 speed fans
Fuel Gas Filter Separators	2	30,821 scfm	Natural gas fuel
Raw Water Intake Pump	1	150 gpm submersible	At Tehama-Colusa Canal (Spare in stock)
Raw Water/Firewater Storage Tank	1	Nominal 400,000 U.S. gal	300,000 dedicated to firewater reserve
Demineralized Water Storage Tank	1	Nominal 200,000 U.S. gal	Boiler feed water makeup
Emergency Generator	1	1,000 kW	Diesel engine powered
Fire Pumps	1 set	250 Hp; 250 Hp; 10 Hp	1 Diesel; 1 electric; 1 jockey pump

Note:
Refer to Figure 3.4-1 for location of Major Equipment

Table 3.4-3
Natural Gas Analysis

Constituent	Percent by Volume
Methane	94
Ethane	3
Propane	0.1
n-Butane	0.01
i-Butane	0.01
n-Pentane	0.00
i-Pentane	0.01
Hexane+	0.01
Oxygen	0.00
Nitrogen	2.2
Carbon dioxide	0.66
Total	**100.00**
Sulfur (grains per 100 scf)	<0.20
Specific Gravity (air = 1.00)	0.59
Higher Heating Value (Btu per scf)	1010

Source: PG&E, 2006b.

Notes:

Btu = British thermal units.
scf = standard cubic feet.

Table 3.4-4
Daily and Annual Average Water Consumption Requirements

Stream Name	Average Flow (gpm)	Maximum Flow (gpm)	Average Annual Usage (acre ft/year)
Sanitary Waste	5	5	8
Minor Losses	1	1	1.6
CTG Cooler Evaporation (1) (3)(4)	0	96	77.4
HRSG Blowdown Evaporation (2) (3)(4)	12.3	19.1	25.3
Steam Cycle Leakage (2) (3)(4)	5.5	9.0	11.7
Crystallizer Evaporation (2) (3)(4)	1.0	1.5	2.1
Total Plant Water Usage Requirements	**24.8**	**131.6**	**126.1**

Notes:

1 Average annual usage based on CTG evaporative cooler operation ON for six months per year.
2 Average annual usage assumes duct firing operation 50 percent of the time.
3 Average flow rates are calculated with duct firing OFF and CTG evaporative cooler OFF.
4 Maximum flow rates are calculated with duct firing ON and CTG evaporative cooler ON.

Table 3.4-5
Water Balances
(Page 1 of 2)

		Case 1	Case 2	Case 3	Case 4
Ambient Dry Bulb Temperature		59 °F DB	94 °F DB	59 °F DB	94 °F DB
Relative Humidity		60 percent RH	25.4 percent RH	60 percent RH	25.4 percent RH
Ambient Wet Bulb Temperature		49.5°F WB	67.5°F WB	49.5°F WB	67.5°F WB
GT Load		100 percent	100 percent	100 percent	100 percent
Duct Burner Status		ON	ON	OFF	OFF
CT Evaporative Cooler Status		OFF	ON	OFF	ON
CT/HRSG Trains Operating		2	2	2	2
Air Cooled Condenser Status		ON	ON	ON	ON
		Iso Conditions	Peak Summer	Iso Conditions	Peak Summer
Stream Number	**Stream Description**	**Flow Rate U.S. gpm**	**Flow Rate U.S. gpm**	**Flow Rate U.S. gpm**	**Flow Rate U.S. gpm**
1	System Makeup Water	30	126	21	117
2	*Not used*	-	-	-	-
3	*Not used*	-	-	-	-
4	Potable Water System Makeup	5	5	5	5
5	Boiler/Turbine Wash Water	5	5	5	5
6	Fire Water System Makeup	1	1	1	1
7	CTG Inlet Air Evap Cooler Makeup	0	128	0	128
8	Raw Water Makeup	59	27	35	3
9	*Not used*	-	-	-	0
10	Demin System Makeup (backup)	0	0	0	0
11	*Not used*	-	-	-	0
12	Wastewater to Oil Water Separator	6	6	6	6
13	Treated OWS Effluent	6	6	6	6
14	CTG Inlet Air Evap Cooler Blowdown	0	32	0	
15	*Not used*	-	-	-	
16	*Not used*	-	-	-	
17	Demin System Makeup (backup)	107	108	69	
18	HRSG Blowdown Quench Water	134	134	86	
19	Quenched HRSG Blowdown Return	174	174	111	
20	Microfiltration Reject	5	5	3	
21	Microfiltration Effluent	102	102	65	
22	Primary RO Permeate	77	77	49	
23	Primary RO Reject	26	26	16	
24	Secondary RO Permeate	65	65	42	
25	Secondary RO Reject	12	12	7	
26	EDI Feedwater	65	65	42	
27	EDI Reject	2	2	1	1

Table 3.4-5
Water Balances
(Page 2 of 2)

		Flow Rate U.S. gpm	Flow Rate U.S. gpm	Flow Rate U.S. gpm	Flow Rate U.S. gpm
28	Demineralized Water	63	63	41	40
29	Makeup Demineralized Water	63	63	41	40
30	HRSG Blowdown	54	54	33	33
31	Sampling Requirements	5	5	5	5
32	Steam Supply to Evap System	5	5	5	5
33	Condensate Return from Evap System	5	5	5	5
34	System Leakage and Losses	4	4	3	3
35	HRSG Quench Flash Evaporation	19	19	12	12
36	Sludge to Offsite Disposal	<1	<1	<1	<1
37	Sorbent Media to Disposal	Nil	Nil	Nil	Nil
38	Potable Water to Distribution	5	5	5	5
39	Treated Sanitary Waste	5	5	5	5
40	Evaporator Effluent Stream	2	2	1	1
41	Distillate Recycle	29	29	19	19
42	Crystallizer Feed	2	2	1	1
43	Crystallizer Solids to Disposal	<0.5	<0.5	<0.5	<0.5
44	Crystallizer Evaporation	2	2	1	1
45	*Not used*	-	-	-	-
46	CTG Evaporation	0	96	0	96
47	Wastewater to Evaporator	31	31	20	20

Notes:
1 Flow rates may not add due to differences in stream temperatures.
2 Flow rates reflect flows at normal conditions. Intermittent or negligible flows are not included.
3 All numbers are estimated.
4 See Figures 3.4-5A and 3.4-5B for Water Balance Diagram.

Table 3.4-6
Tehama-Colusa Canal Water Analysis

Water Quality Parameter	Average Concentration
Turbidity	3.8 NTU
Color	10 Units
pH	8.3 Units
Total Suspended Solids	35 mg/L
Total Dissolved Solids	94 mg/L
Hardness as $CaCO_3$	62 mg/L
Calcium	20 mg/L
Magnesium	2.91 mg/L
Sodium	8.0 mg/L
Potassium	Non Detect
Total Alkalinity	78 mg/L
Bicarbonate	78 mg/L
Sulfate	7.4 mg/L
Chloride	5.4 mg/L
Nitrate	1.2 mg/L[1]
Fluoride	<0.1 mg/L[1]
Arsenic	0.005 mg/L
Iron	<0.1 mg/L[1]
Boron	<0.1 mg/L[1]
Silica	8.8 mg/L[1]

Sources: Water Analysis by Curtis & Tompkins, Ltd., 06-Mar-01
Water Analysis by Curtis & Tompkins, Ltd., 11-April-01

$CaCO_3$ = calcium carbonate
mg/L = milligrams per liter
NTU = nephelometric turbidity units

Table 3.4-7
Anticipated Hazardous Material Usage and Storage During Operation

Material	Application	Amount Stored On Site	Phase	CAS Number	Hazards [a]	Threshold Quantity
Aqueous Ammonia, 19 wt percent	NO_X Emissions Control	20,000 U.S. gal	Liquid	7664-41-7	Acute, chronic, fire, pressure	20,000 lb
Mineral Insulating Oil	Electrical Transformers	55,000 U.S. gal [b]	Liquid	None	Acute, chronic, fire	N/A
Lubricating Oil	Mechanical Equipment	12,400 U.S. gal [b]	Liquid	None	Acute, chronic, fire	N/A
Propylene Glycol	Antifreeze for closed cooling water system	25 U.S. gal [b]	Liquid	57-55-6	Acute, chronic, fire	N/A
Sulfuric Acid, 29.5 wt percent	Station and Gas Turbine Batteries	1,500 U.S. gal	Liquid	7664-93-9	Acute, chronic, reactive	1,000 lb
Sulfuric Acid, 93 wt percent	Water Treatment Scaling Control	1 × 6,000 U.S. gal	Liquid	7664-93-9	Acute, chronic, reactive	1,000 lb
Sodium Hydroxide, 50 wt percent	Water Treatment pH Control	6,000 U.S. gal	Liquid	1310-73-2	Acute, chronic, reactive	1,000 lb
Sodium Hypochlorite, 12 wt percent	Water Treatment Disinfectant	1 × 6,000 U.S. gal	Liquid	7681-52-9	Acute	
Alkaline Phosphate Solution	Boiler Feedwater Scale Control	5 × 55 U.S. gal Containers/ 30 days storage [c]	Liquid			
Hydrazine, 35 wt percent	Boiler Feedwater Corrosion Inhibitor	2 × 400 U.S. gal Containers [c]	Liquid	302-01-2	Acute, chronic	1 lb
Aqueous Ammonia, 19 wt percent[1]	Boiler Feedwater Corrosion Control	2 × 400 U.S. gal Containers [c]	Liquid	7664-41-7	Acute, chronic, fire, pressure	20,000 lb
Hydrochloric Acid	HRSG Chemical Cleaning	Temporary Only [d]	Liquid	7647-01-0	Acute, chronic	5,000 lb [e]
Hydrated Lime	Wastewater Treatment	25 tons	Powder	471-34-1		
Soda Ash	Wastewater Treatment	25 tons	Powder	497-19-8		
Sodium Bisulfite, 38 wt percent	Water Treatment	2 × 400 U.S. gal Containers [c]	Liquid	7631-90-5	Acute, reactive	
Aluminum Sulfate, 50 wt percent	Water Treatment Coagulant	3,000 U.S. gal	Liquid	10043-01-3	Acute	5,000 lb
Ammonium Bifluoride	HRSG Chemical Cleaning	Temporary Only [d]	Liquid			
Citric Acid	HRSG Chemical Cleaning	Temporary Only [d]	Liquid	77-92-9	Acute, chronic	N/A
EDTA Chelant	HRSG Chemical Cleaning	Temporary Only [d]	Liquid			
Sodium Nitrite	HRSG Chemical Cleaning	Temporary Only [d]	Liquid	7632-00-0	Acute	N/A
Carbon Dioxide	Generator Purging	25,200 scf	Gas	124-38-9	Acute, chronic, pressure	N/A
Carbon Dioxide	Fire Suppression	24,000 lb	Liquid	124-38-9	Acute, chronic, pressure	N/A

Table 3.4-7
Anticipated Hazardous Material Usage and Storage During Operation

Material	Application	Amount Stored On Site	Phase	CAS Number	Hazards [(a)]	Threshold Quantity
Hydrogen	Generator Cooling	24,000 scf	Gas	1333-74-0	Acute, fire, pressure, reactive	10,000 lb
Nitrogen	Blanketing	200 lb	Gas	7727-37-9	Pressure	N/A
Diesel Fuel Oil	1. Diesel Firewater Pump Motor 2. Emergency Diesel Generator	1. 280 U.S. gal 2. 600 U.S. gal	Liquid	68476-34-6	Acute, chronic, fire	N/A
Natural Gas	Gas Turbine Generator and Duct Burner Fuel	1,300 lb [(b)]	Gas	None	Acute, fire, pressure	N/A

Notes:

1. All quantities are approximate.
2. Demineralizer regeneration chemicals for makeup water are not included — plant will use leased equipment , which are regenerated off site.

a Health hazards include acute (immediate) and chronic (delayed). Physical categories include fire, sudden release of pressure and reactive.

b In the equipment and pipelines.

c Chemicals are pre-mixed in portable containers.

d Gas turbine compressor water wash cleaning chemicals are not stored on site; cleaning is by a contractor.

e Threshold applies to hydrogen chloride.

Table 3.5-1
Major Structures

Equipment	Qty	Size, L×W×H (feet)	Service/Remarks
Combustion Turbine Generators (CTGs)	2	140 × 45 × 58	DLN combustion control with inlet air foggers
Steam Turbine Generator (STG)	1	97 × 39 × 54	Condensing Reheat STG
Heat Recovery Steam Generators (HRSGs)	2	180 × 37 × 94	Three pressure w/ reheat and supplemental duct firing
Aqueous Ammonia Storage	2	44 × 9 DIA × 12	NO_X control
Fin Fan Coolers	1	60 × 70 × 17	Lube Oil Cooling
HRSG Stacks	2	19 DIA × 175	Self-supported
Air cooled condenser	1	220 × 384 × 144	45 Cells (estimated)
Admin/Control Bldg	1	260 × 90 × 24	
Water Treatment Bldg	1	150 × 90 × 24	
Main Transformer	3	30 × 22 × 20	
Lattice Tower	12	30 × 30 × 125	Transmission Lines (4 footings each)
Raw Water/Firewater Storage Tank	1	50 DIA × 34	400,000 gallons; 300,000 dedicated to firewater reserve
Demineralized Water Storage Tank	1	33 DIA × 32	Boiler feed water makeup and WAC Regeneration
Note: Refer to Figure 3.4-1 for location of Major Equipment			

Table 3.8-1
Plant Operation Workforce

Department	Personnel	Shift	Workdays
Operations	13 Power Plant Technicians 4 Lead Power Plant Technicians	Rotating 12-hour shift, 2 or 3 employees per shift	7 days a week.
Production	1 Operations Supervisor 1 Engineer 1 EH&S Coordinator 1 Chemist	Standard 8 to 10 hours per day.	4 to 5 days a week with additional coverage as required
Administration	1 Plant Manager 1 Procurement Specialist 1 Administrative Supervisor 1 Administrative Assistant	Standard 8 to 10 hours per day.	4 to 5 days a week with additional coverage as required.
Maintenance	1 Maintenance Supervisor 1 Maintenance Safety Engineer 2 ITC Technicians 1 Electrician 1 Mechanic	Standard 8 to 10 hours per day.	4 to 5 days a week with additional coverage as required.
Total: 31 Full Time Personnel			

Table 3.9-1
Typical Audible Noise from Corona Discharge

Line Voltage	Audible Noise Level
138 kV	33.5 dBA
240 kV	40.4 dBA
356 kV	51.0 dBA

dBA = decibels measured using the A-weighted scale.

Table 3.9-2
Major Equipment Redundancy

Description	Number	Notes
Combustion Turbine Generator, Heat Recovery Steam Generator and Combustion Turbine Generator Main Transformer	Two Trains	Either train can operate independently. Also, bypass systems are provided around the Steam Turbine Generator to allow both Combustion Turbine Generator/HRSG trains to operate at full load without duct firing not on a continuous basis).
Steam Turbine Generator	One	Refer to note related to Combustion Turbine Generator/HRSG trains.
Steam Turbine Generator Main Transformer	One	Refer to note related to Combustion Turbine Generator/HRSG trains.
Boiler Feedwater Pump	Two at 100 percent per train	One Boiler Feedwater Pump per train can be down and the plant will be able to operate at full load.
Condensate Pump	Three at 50 percent (Each sized for one train)	One Condensate Pump can be down and the plant will be able to operate at full load.
Air cooled condenser	One	45 fans are provided, one per cell. Loss of a single fan would result in at most a loss of 2.3 percent of the total cooling capacity.
Auxiliary Cooling Water Pump	Two at 100 percent	One Auxiliary Cooling Water Pump can be down and the plant will be able to operate at full load.
Air Compressors	Two at 100 percent Instrument Air Compressors (each sized for one train)	One Air Compressor can be down and the plant will be able to operate at full load.

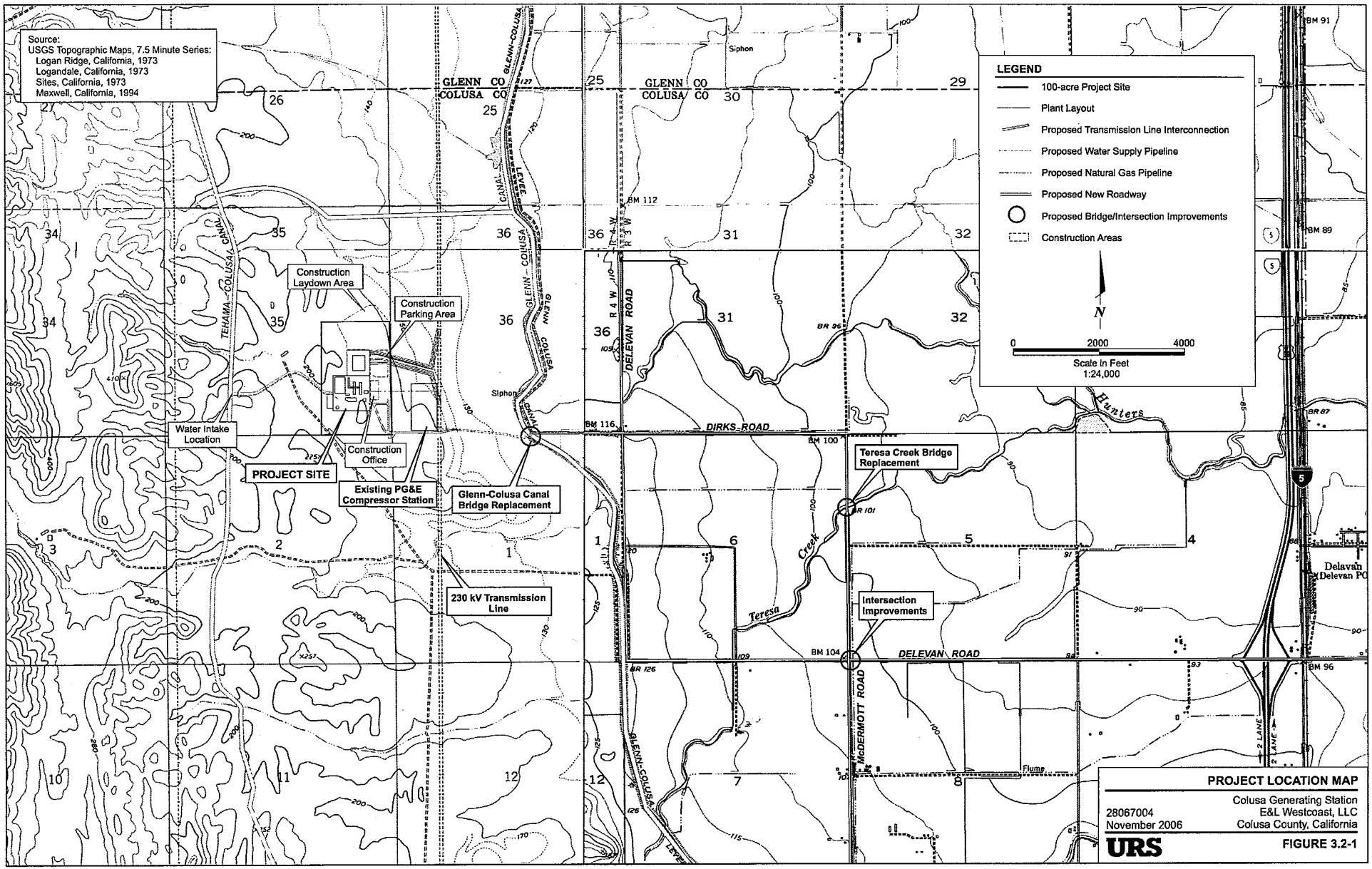

PROJECT LOCATION MAP

Colusa Generating Station
E&L Westcoast, LLC
Colusa County, California

28067004
November 2006

URS

FIGURE 3.2-1

11/02/06 vsa ..\28067004 CPV Colusa\3.0 Facility Description\3.2-1_plm.cdr

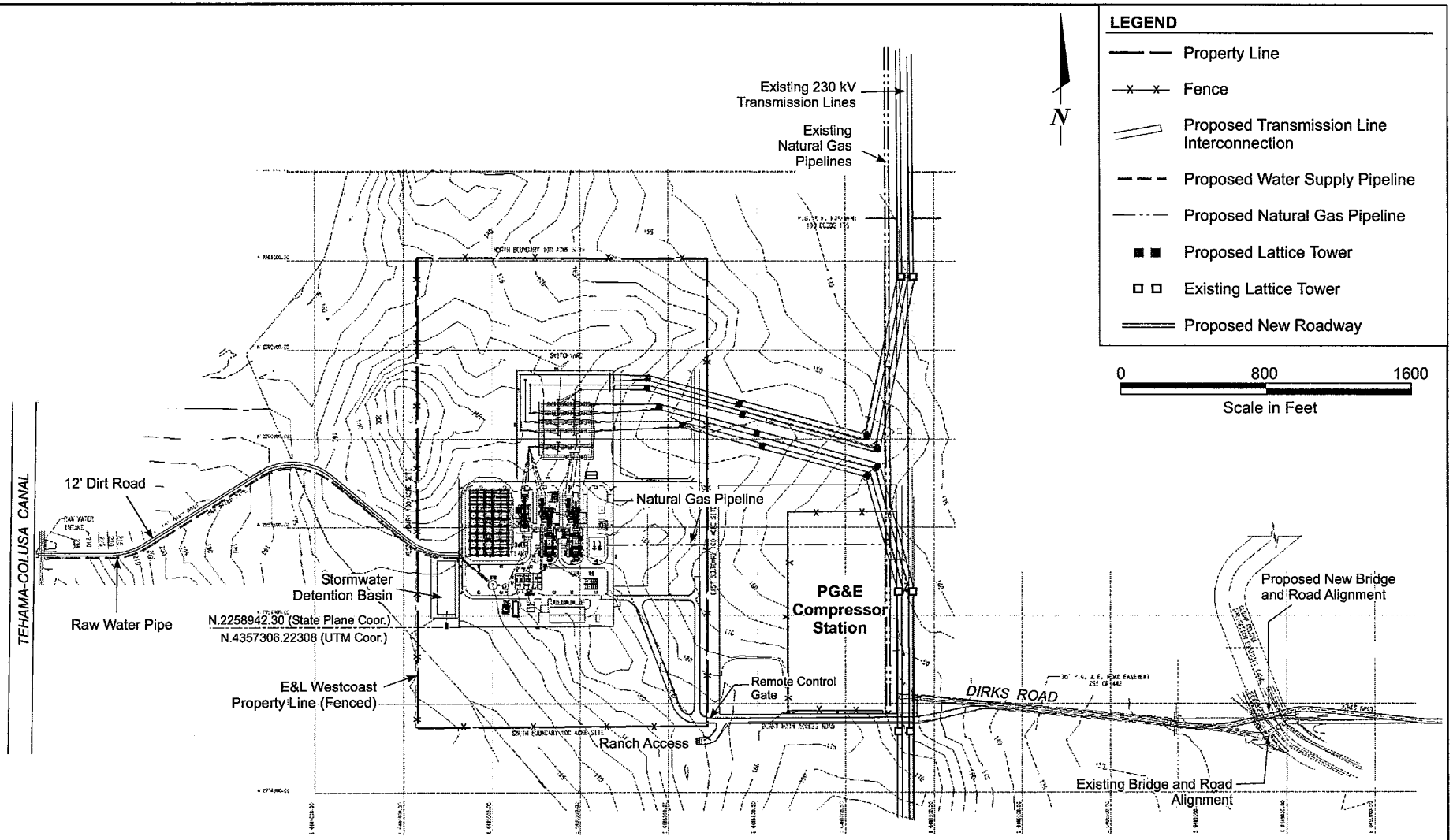

SITE PLAN

Colusa Generating Station
E&L Westcoast, LLC
Colusa County, California

28067004
November 2006

URS

FIGURE 3.3-1

Source:
Bechtel Corporation; Colusa Power Plant, Dwg. No. P1-0100-00003
General Arrangement With Air Cooled Condenser (COL_GA05 Rev Oc) October 4, 2006;
Figure 7.2-1 in progress Oct 20, 2006

10/27/06 vsa ..\28067004 CPV Colusa\3.0 Facility Description\3.3-1_site plan.cdr

LEGEND

1 Combustion Turbine
2 Heat Recovery System Generator (HRSG) with SCR & Oxidation Catalyst
3 Steam Turbine Generator
4 HRSG Exhaust Stack
5 Air Cooled Condenser
6 Auxiliary Boiler
7 Main Transformers
8 Steam Turbine
9 Electrical Auxiliary Transformers
10 Control Room Administration, Warehouse, and Maintenance Bldg.
11 Area Sump
12 Ammonia Storage Tank
13 STG Lube Oil Skid
14 Air Compressors
15 Boiler Feed Water Pump
16 Fuel Gas Separator and Heating
17 GTG Support Skids
18 Power Distribution Center
19 Demineralized Water Storage Tank
20 Fire Water Pump Skid
21 HRSG Blowdown Tank and Sump
22 Gas Metering and Regulating with Fuel Gas Filter/Separators
23 Water Treatment Area
24 Ammonia Transfer Pumps
25 Raw/Firewater Tank
26 General Storage
27 Equipment Shelter
28 Septic Tank
29 Bulk Storage Building
30 Hazardous Waste Storage Area
31 CO_2 Bottles
32 Waste Water Basin
33 Water Evaporator Area
34 Pipe Rack
35 Switchyard Control House
36 230 kV Switchyard
37 CEMS Equipment Room
38 Condensate Tank and Pumps
39 Fin Fan Coolers
40 Ammonia Dilution Skid
41 Steam Turbine Electrical Equipment
42 Electrical Switchgear Building
43 Unit Auxiliary Transformer
44 Generator Breakers
45 Emergency Diesel Generator
46 Hydrogen Storage Area Tank
47 CT Air Inlet
48 Phosphate Feed Skid
49 Sample Panel
50 Auxiliary Cooling Water Pumps & Heat Exchanger
51 Stormwater Detention Basin
52 Oil/Water Separator

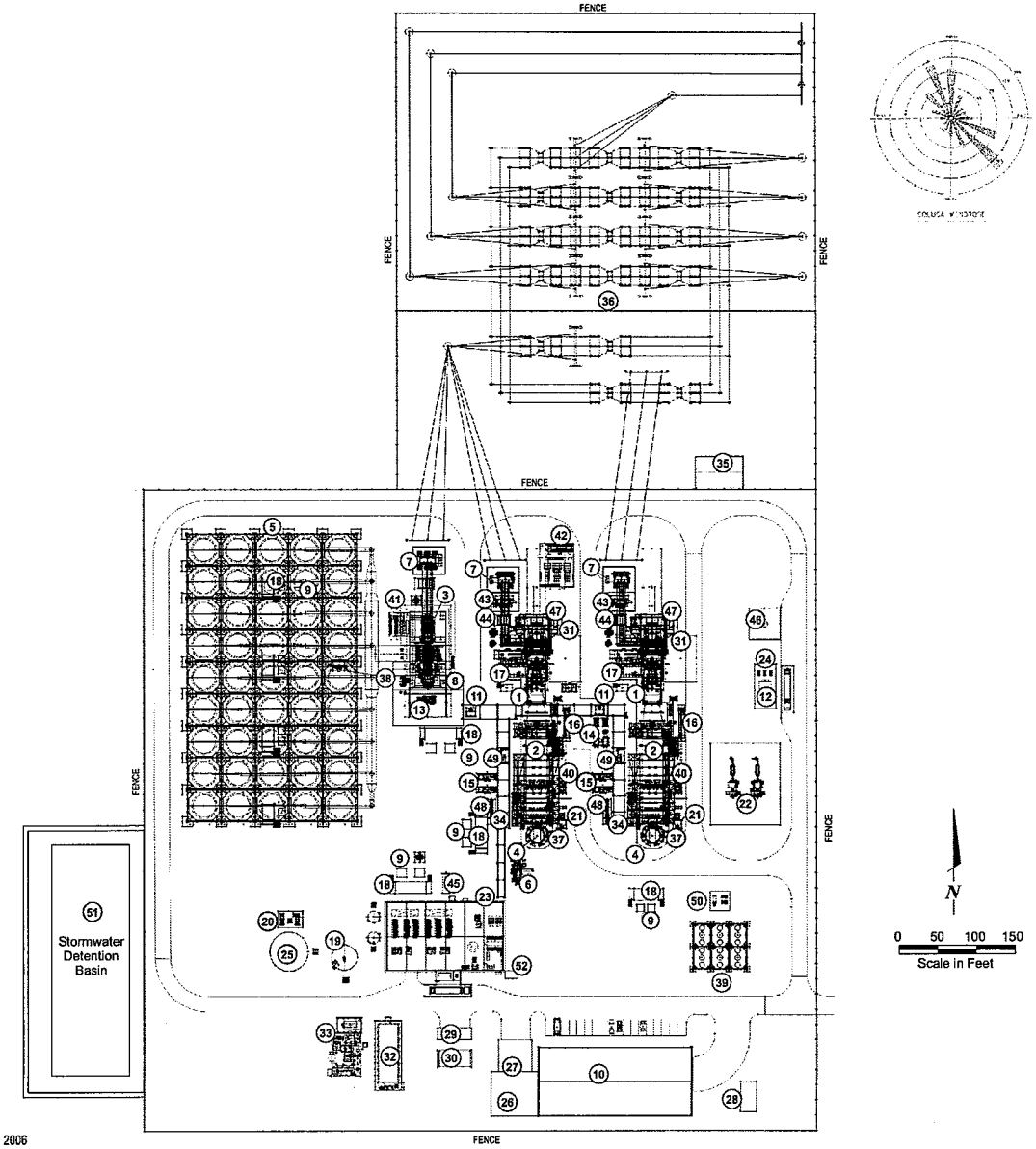

Source:
Bechtel Corporation; Colusa Power Plant, Dwg. No. P1-0100-00001
General Arrangement With Air Cooled Condenser (COL_GA05 Rev 0C), October 4, 2006

PLOT PLAN

Colusa Generating Station
E&L Westcoast, LLC
Colusa County, California

28067004
November 2006

URS

FIGURE 3.4-1

10/30/06 vsa ..\28067004 CPV Colusa\3.0 Facility Description\3.4-1_plot plan.cdr

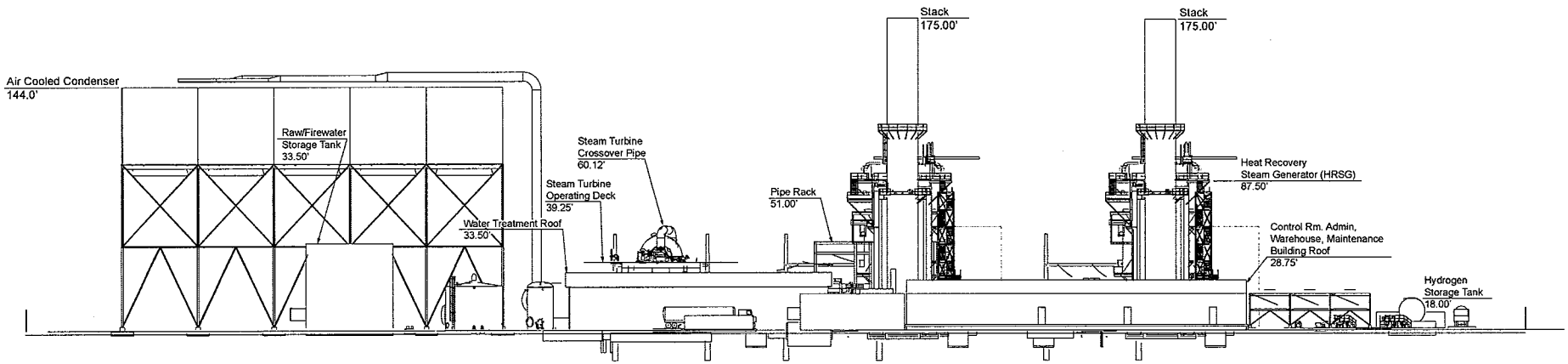

Source:
Bechtel Corporation; Colusa Power Plant, Col_RevC_SouthView.dgn; October 4, 2006

SOUTH ELEVATION
660 MW COMBINED CYCLE PLANT

Colusa Generating Station
28067004 E&L Westcoast, LLC
November 2006 Colusa County, California

URS

FIGURE 3.4-2

10/27/06 vsa ..\28067004 CPV Colusa\3.0 Facility Description\3.4-2_south elevation.ai

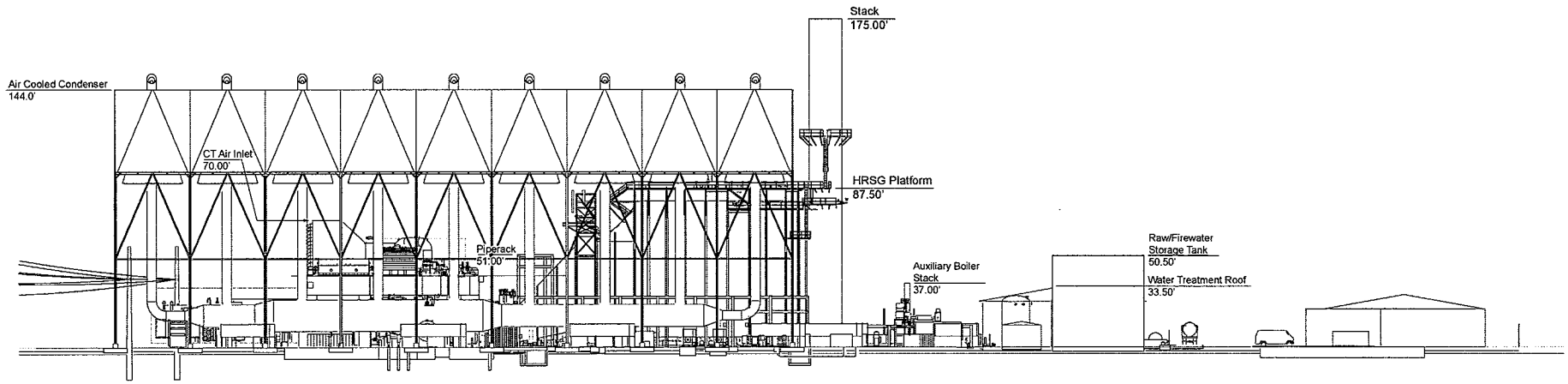

Source:
Bechtel Corporation; Colusa Power Plant, Col_RevC_WestView.dgn; October 4, 2006

WEST ELEVATION
660 MW COMBINED CYCLE PLANT

Colusa Generating Station
28067004 E&L Westcoast, LLC
November 2006 Colusa County, California

URS

FIGURE 3.4-3

10/27/06 vsa ..\28067004 CPV Colusa\3.0 Facility Description\3.4-3_west elevation.ai

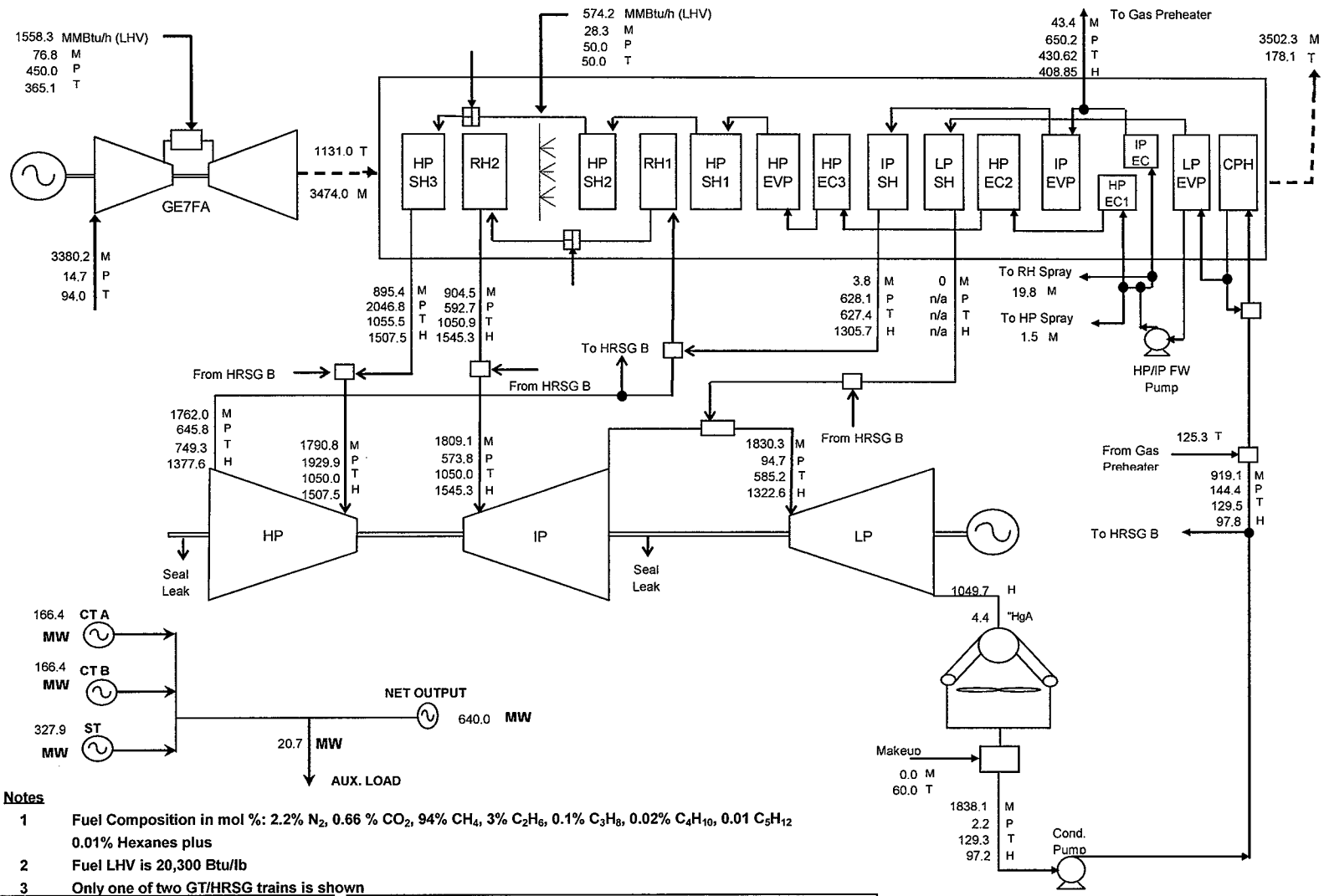

Notes

1. Fuel Composition in mol %: 2.2% N_2, 0.66 % CO_2, 94% CH_4, 3% C_2H_6, 0.1% C_3H_8, 0.02% C_4H_{10}, 0.01 C_5H_{12} 0.01% Hexanes plus
2. Fuel LHV is 20,300 Btu/lb
3. Only one of two GT/HRSG trains is shown

Legend

M: mass flow, kpph
P: pressure, psia
T: temperature, °F
H: enthalpy, Btu/lb

● Splitter
□ Mixer
⊞ Attemporator

Performance Summary

94.0	°F (D.B.T)	Evap Cooler	on
25.4	% Rel. Hum.	Duct Burner	on
14.669	psia	GT/HRSG Trains	2

Net Facility Output	640.0	MW
Net Facility Heat Rate	7,397	Btu/kWh (HHV)

PROCESS FLOW DIAGRAM – POWER BLOCK: ACC, JULY PEAK, FIRED

Colusa Generating Station
E&L Westcoast, LLC
Colusa County, California

28067004
November 2006

URS

FIGURE 3.4-4A

Source:
Bechtel, Colusa ACC Diagram, Rev. 3, Oct. 2006

10/25/06 vsa ..\28067004 CPV Colusa\3.0 Facility Description\3.4-4A_ACC JP-fired.ai

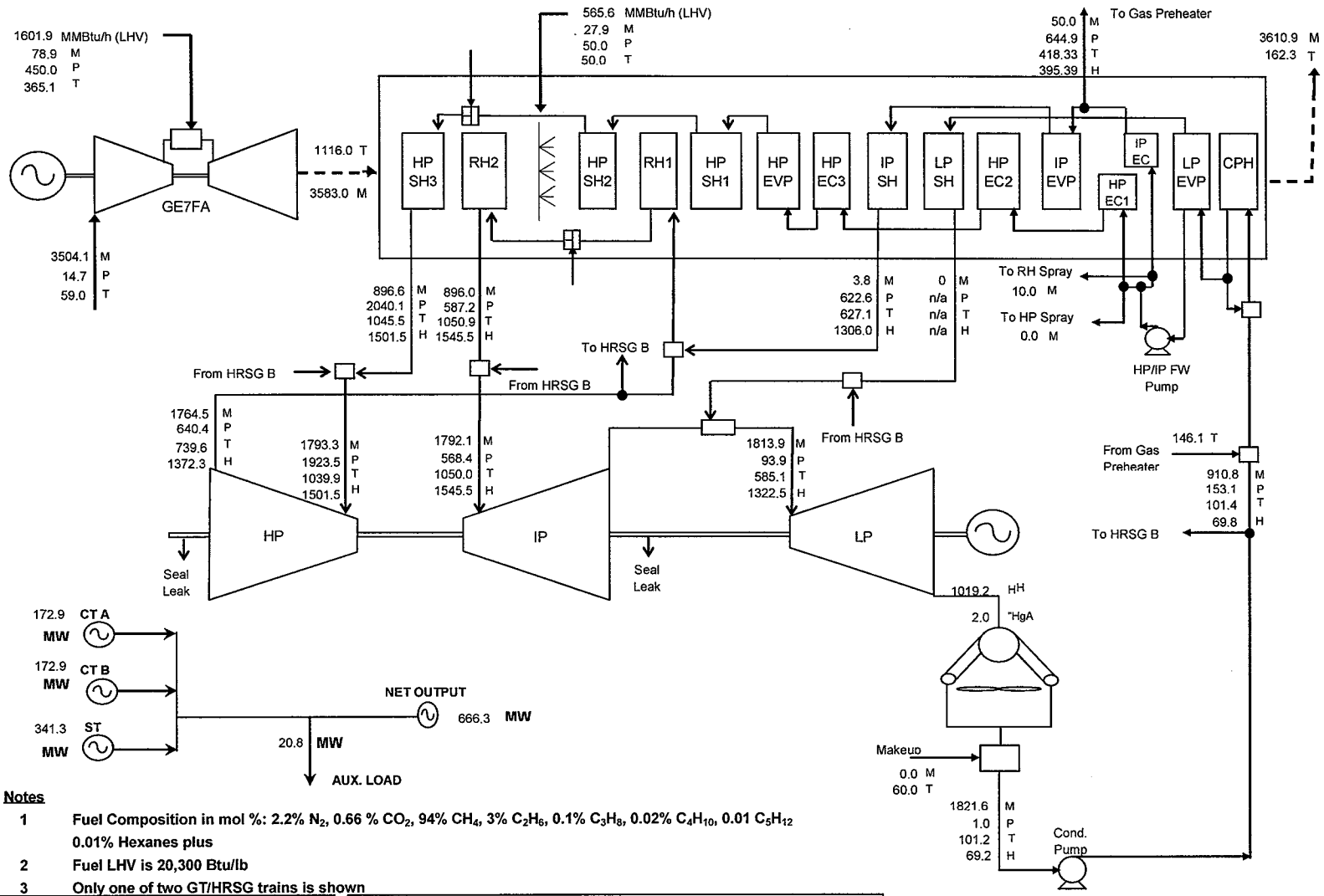

Notes

1. **Fuel Composition in mol %: 2.2% N_2, 0.66 % CO_2, 94% CH_4, 3% C_2H_6, 0.1% C_3H_8, 0.02% C_4H_{10}, 0.01 C_5H_{12} 0.01% Hexanes plus**
2. **Fuel LHV is 20,300 Btu/lb**
3. **Only one of two GT/HRSG trains is shown**

Legend

M: mass flow, kpph
P: pressure, psia
T: temperature, °F
H: enthalpy, Btu/lb

● Splitter
□ Mixer
⊞ Attemporator

Performance Summary

59.0	°F (D.B.T)	Evap Cooler	off
60.0	% Rel. Hum.	Duct Burner	on
14.669	psia	GT/HRSG Trains	2

Net Facility Output	666.3	MW
Net Facility Heat Rate	7,222	Btu/kWh (HHV)

PROCESS FLOW DIAGRAM – POWER BLOCK: ACC, ISO, FIRED

Colusa Generating Station
E&L Westcoast, LLC
Colusa County, California

28067004
November 2006

URS

FIGURE 3.4-4B

Source:
Bechtel, Colusa ACC Diagram, Rev. 3, Oct. 2006

10/25/06 vsa ..\28067004 CPV Colusa\3.0 Facility Description\3.4-4B_ACC ISOfired.ai

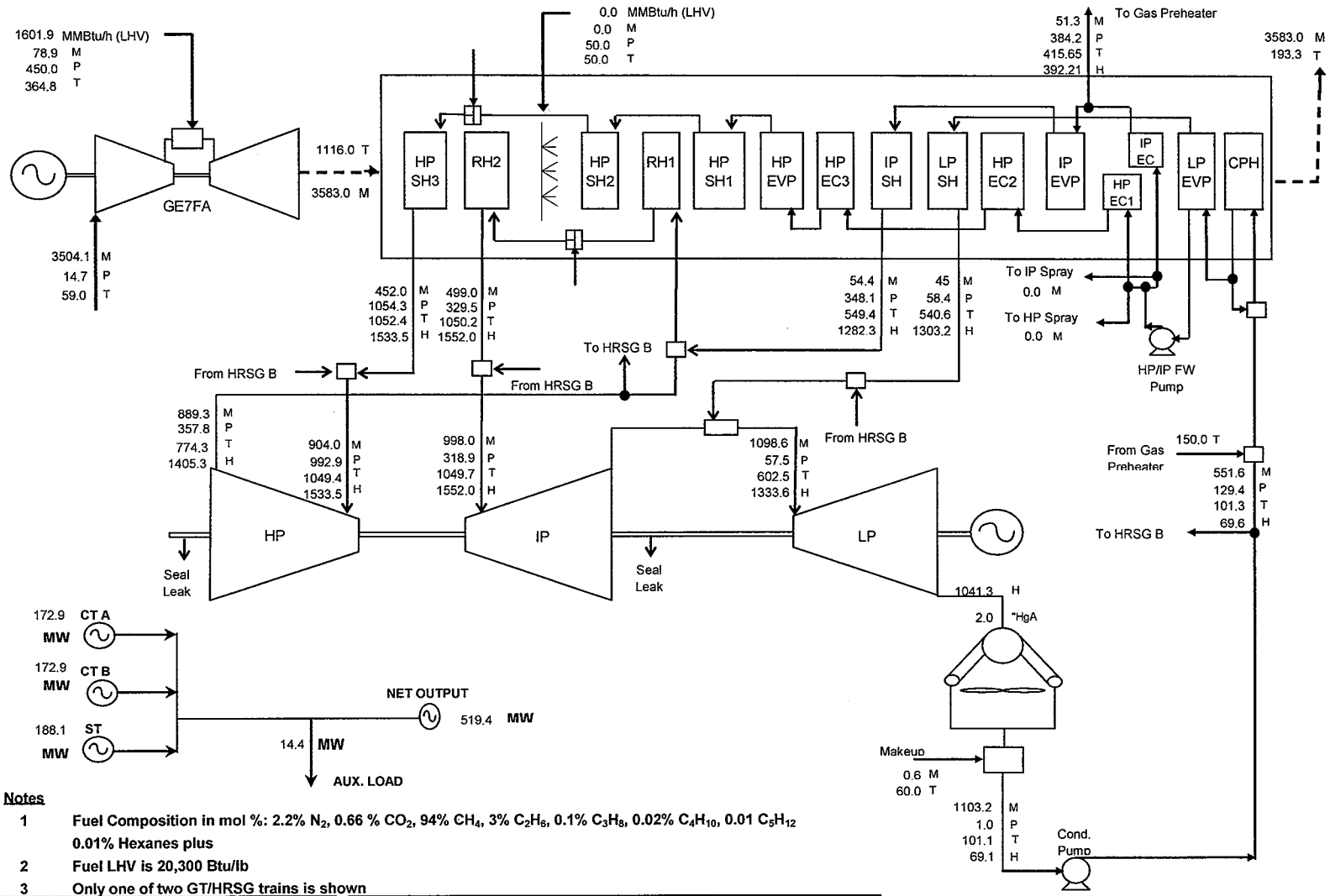

Notes

1. **Fuel Composition in mol %: 2.2% N_2, 0.66 % CO_2, 94% CH_4, 3% C_2H_6, 0.1% C_3H_8, 0.02% C_4H_{10}, 0.01 C_5H_{12} 0.01% Hexanes plus**
2. **Fuel LHV is 20,300 Btu/lb**
3. **Only one of two GT/HRSG trains is shown**

Legend

M: mass flow, kpph
P: pressure, psia
T: temperature, °F
H: enthalpy, Btu/lb

Splitter
Mixer
Attemporator

Performance Summary

59.0	°F (D.B.T)	Evap Cooler	off
60.0	% Rel. Hum.	Duct Burner	off
14.669	psia	GT/HRSG Trains	2

Net Facility Output	519.4	MW
Net Facility Heat Rate	6,846	Btu/kWh (HHV)

PROCESS FLOW DIAGRAM – POWER BLOCK: ACC, ISO, UNFIRED

Colusa Generating Station
E&L Westcoast, LLC
Colusa County, California

28067004
November 2006

URS

FIGURE 3.4-4C

Source:
Bechtel, Colusa ACC Diagram, Rev. 3, Oct. 2006

10/25/06 vsa ..\28067004 CPV Colusa\3.0 Facility Description\3.4-4C_ACC ISOunfired.ai

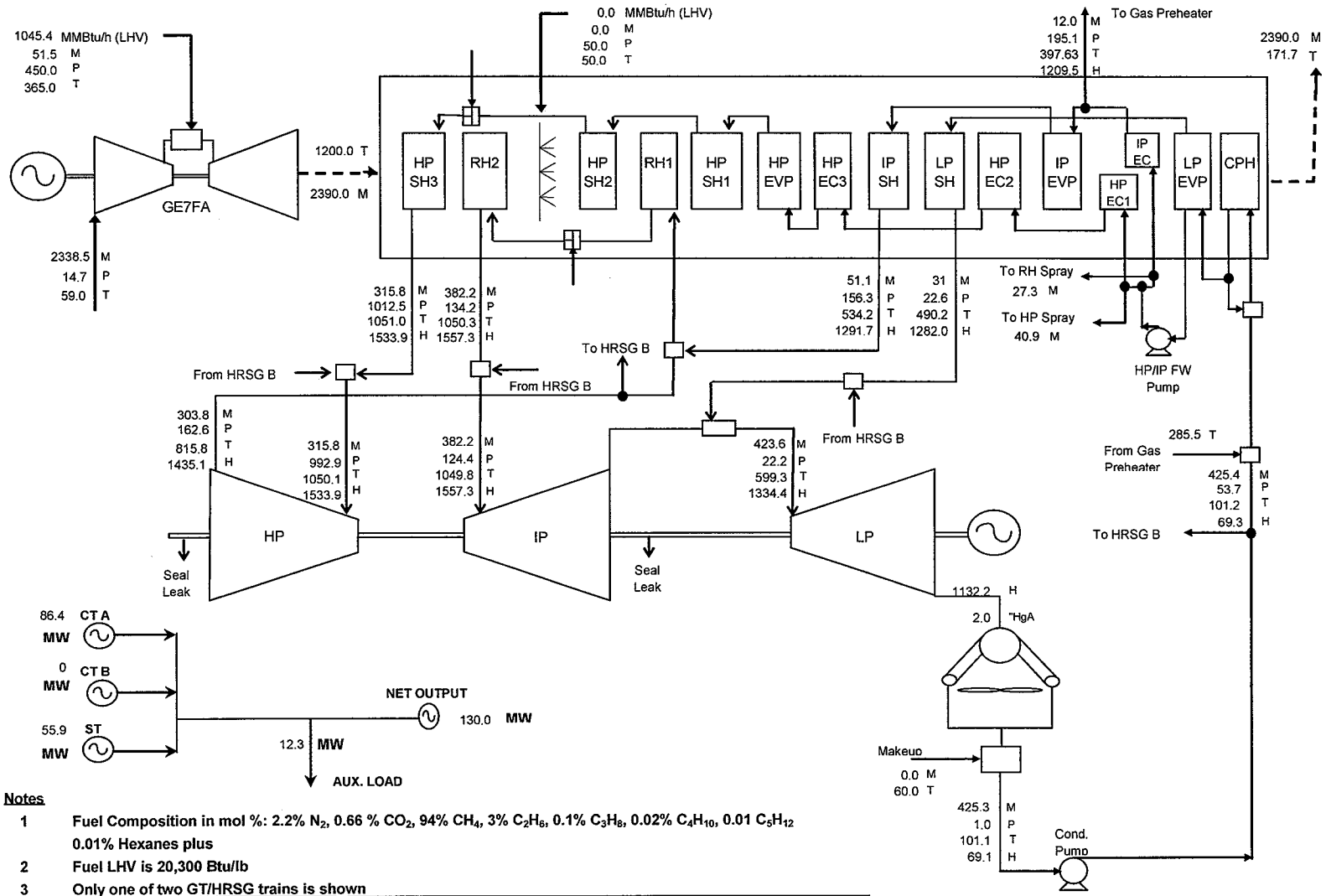

Notes

1. Fuel Composition in mol %: 2.2% N_2, 0.66 % CO_2, 94% CH_4, 3% C_2H_6, 0.1% C_3H_8, 0.02% C_4H_{10}, 0.01 C_5H_{12} 0.01% Hexanes plus
2. Fuel LHV is 20,300 Btu/lb
3. Only one of two GT/HRSG trains is shown

Legend

M: mass flow, kpph
P: pressure, psia
T: temperature, °F
H: enthalpy, Btu/lb

● Splitter
□ Mixer
⊟ Attemporator

Performance Summary

59.0	°F (D.B.T)	Evap Cooler	off
60.0	% Rel. Hum.	Duct Burner	off
14.669	psia	GT/HRSG Trains	1

Net Facility Output	130.0	MW
Net Facility Heat Rate	8,924	Btu/kWh (HHV)

PROCESS FLOW DIAGRAM – POWER BLOCK: ACC, ISO, MINIMUM LOAD, UNFIRED

Colusa Generating Station
E&L Westcoast, LLC
Colusa County, California

28067004
November 2006

URS

FIGURE 3.4-4D

Source:
Bechtel, Colusa ACC Diagram, Rev. 3, Oct. 2006

10/25/06 vsa ..\28067004 CPV Colusa\3.0 Facility Description\3.4-4D_ACC ISO min load.ai

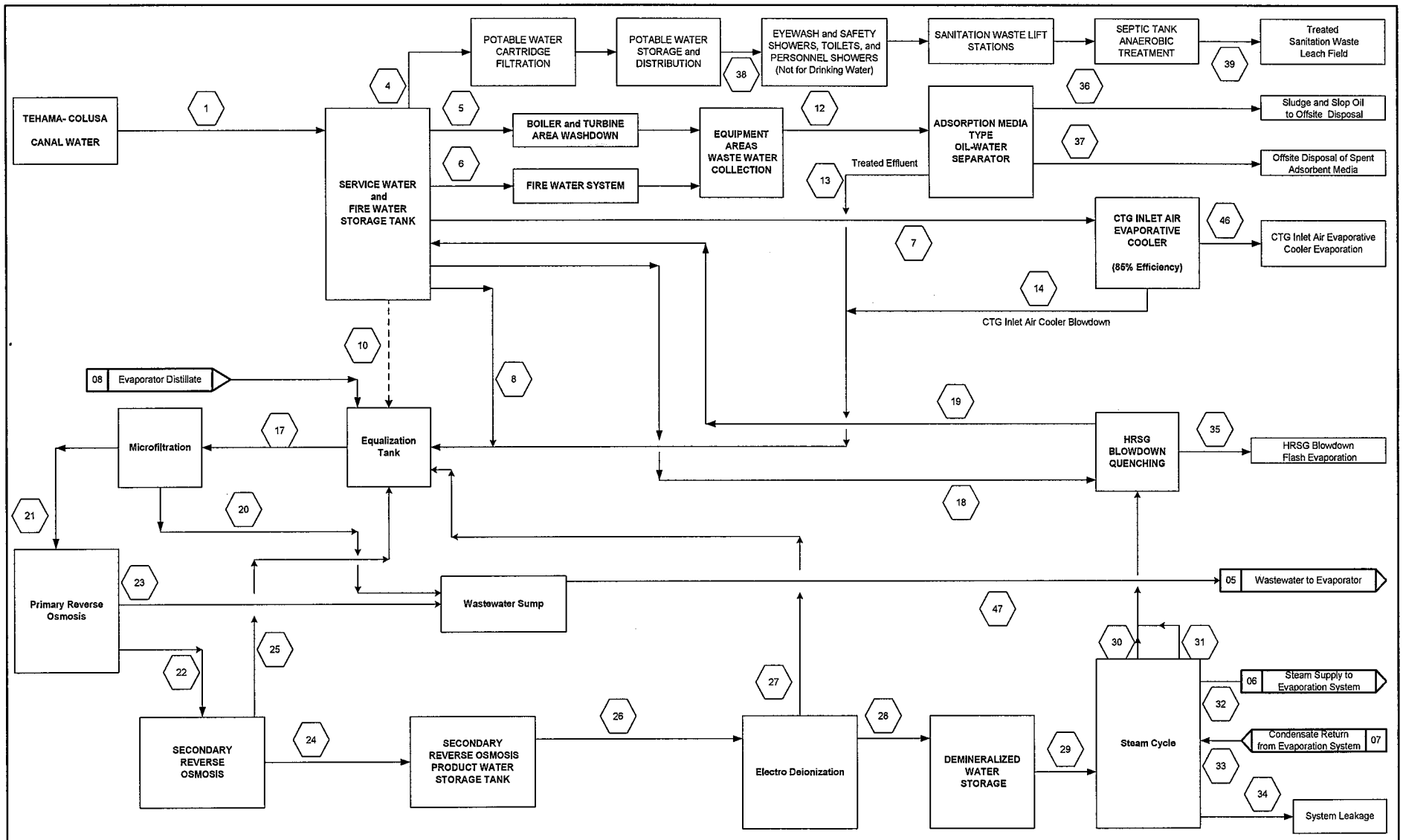

Note:
Table 3.4-5 provides flow rates for each stream.

Source:
Bechtel Dwg. No. M5-WA-G0001, Rev. C, Sheet 1, October 6, 2006

WATER BALANCE DIAGRAM

Colusa Generating Station
28067004 E&L Westcoast, LLC
November 2006 Colusa County, California

URS

FIGURE 3.4-5A

10/29/06 vsa ..\28067004 CPV Colusa\3.0 Facility Description\3.4-5A_water bal-1.ai

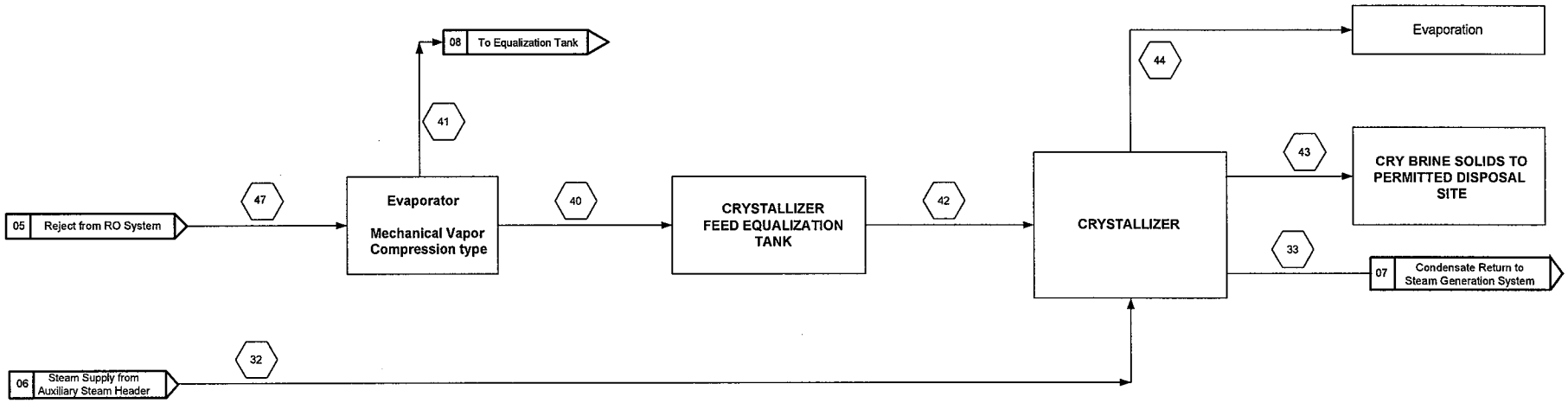

Note:
Table 3.4-5 provides flow rates for each stream.

Source:
Bechtel Dwg. No. M5-WA-G0001, Rev. C, Sheet 2, October 6, 2006

WATER BALANCE DIAGRAM

Colusa Generating Station
28067004 E&L Westcoast, LLC
November 2006 Colusa County, California

URS

FIGURE 3.4-5B

11/02/06 vsa ..\28067004 CPV Colusa\3.0 Facility Description\3.4-5B_water_bal-2.ai

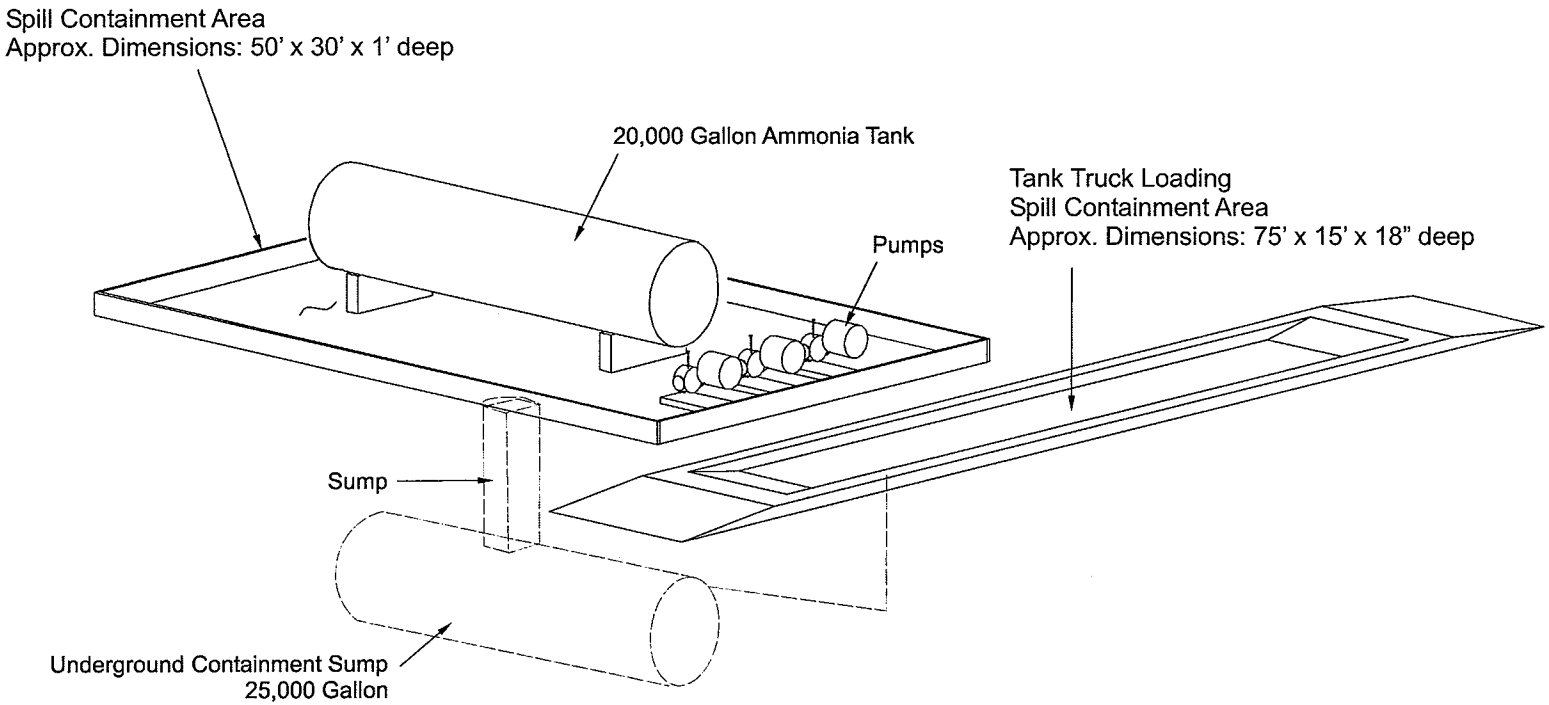

Source:
Bechtel, 10/23/06

AQUEOUS AMMONIA STORAGE AND SPILL CONTAINMENT

Colusa Generating Station
E&L Westcoast, LLC
Colusa County, California

28067004
November 2006

URS

FIGURE 3.5-6

11/02/06 vsa ..\28067004 CPV Colusa\3.0 Facility Description\3.5-6_aqammonia.cdr

Colusa County APCD
100 Sunrise Blvd. Suite A-3
Colusa, Ca. 95932 : (530) 458-0595

Attachment O

Colusa County APCD
100 Sunrise Blvd. Suite A-3
Colusa, Ca. 95932 : (530) 458-0595

Attachment P