Santa Barbara County
Air Pollution Control District

DRAFT

PERMIT TO OPERATE NO. 5651
AND
PART 70 OPERATING PERMIT NO. 5651

EXXON – SYU PROJECT
LAS FLORES CANYON OIL & GAS PLANT

12000 CALLE REAL, GOLETA
SANTA BARBARA COUNTY, CA

OPERATOR

EXXONMOBIL PRODUCTION COMPANY ("EXXONMOBIL")

OWNERSHIP

EXXONMOBIL PRODUCTION COMPANY ("EXXONMOBIL")

SANTA BARBARA COUNTY
AIR POLLUTION CONTROL DISTRICT

APRIL 26, 2009

-- This page left blank intentionally --

TABLE OF CONTENTS

SECTION **PAGE**

1.0 INTRODUCTION 7

1.1. PURPOSE 7
1.2. STATIONARY SOURCE/FACILITY OVERVIEW 7
1.3. EMISSION SOURCES 12
1.4. EMISSION CONTROL OVERVIEW 12
1.5. OFFSETS/EMISSION REDUCTION CREDIT OVERVIEW 13
1.6. PART 70 OPERATING PERMIT OVERVIEW 13

2.0 DESCRIPTION OF PROJECT AND PROCESS DESCRIPTION 19

2.1. PROJECT AND PROCESS DESCRIPTION 19
2.2. DETAILED PROCESS EQUIPMENT LISTING 29

3.0 REGULATORY REVIEW 35

3.1. RULE EXEMPTIONS CLAIMED 35
3.2. COMPLIANCE WITH APPLICABLE FEDERAL RULES AND REGULATIONS 38
3.3. COMPLIANCE WITH APPLICABLE STATE RULES AND REGULATIONS 40
3.4. COMPLIANCE WITH APPLICABLE LOCAL RULES AND REGULATIONS 40
3.5. COMPLIANCE HISTORY 45

4.0 ENGINEERING ANALYSIS 51

4.1. GENERAL 51
4.2. COGENERATION POWER PLANT 51
4.3. FUGITIVE HYDROCARBON SOURCES 53
4.4. CREW AND SUPPLY BOATS 54
4.5. THERMAL OXIDIZER 56
4.6. TANKS/SUMPS/SEPARATORS 58
4.7. SULFUR RECOVERY UNIT/TAIL GAS CLEANUP UNIT AND INCINERATOR 60
4.8. VAPOR RECOVERY SYSTEMS 61
4.9. STATIONARY COMBUSTION SOURCES 62
4.10. OTHER EMISSION SOURCES 62
4.11. BACT/NSPS/NESHAP/MACT 63
4.12. CEMS/PROCESS MONITORING/CAM 64
4.13. SOURCE TESTING/SAMPLING 65
4.14. OPERATIONAL AND REGIONAL MONITORING 66
4.15. ODOR MONITORING 66
4.16. PART 70 ENGINEERING REVIEW: HAZARDOUS AIR POLLUTANT EMISSIONS 66

5.0 EMISSIONS 83

5.1. GENERAL 83
5.2. PERMITTED EMISSION LIMITS – EMISSION UNITS 83
5.3. PERMITTED EMISSION LIMITS – FACILITY TOTALS 84
5.4. PART 70: FEDERAL POTENTIAL TO EMIT FOR THE FACILITY 84
5.5. PART 70: HAZARDOUS AIR POLLUTANT EMISSIONS FOR THE FACILITY 85
5.6. EXEMPT EMISSION SOURCES/PART 70 INSIGNIFICANT EMISSIONS 85
5.7. ENTIRE SOURCE EMISSIONS (ESE) 85
5.8. NET EMISSIONS INCREASE CALCULATION 85

6.0 AIR QUALITY IMPACT ANALYSIS 109

6.1. MODELING 109

6.2. INCREMENTS 112
6.3. VEGETATION AND SOILS ANALYSIS 113
6.4. POTENTIAL TO IMPACT VISIBILITY AND OPACITY 114
6.5. HEALTH RISK ASSESSMENT 114
6.6. PUBLIC NUISANCE 114

7.0 CAP CONSISTENCY, OFFSET REQUIREMENTS AND ERCS 123

7.1. GENERAL 123
7.2. CLEAN AIR PLAN 123
7.3. OFFSET REQUIREMENTS 124
7.4. EMISSION REDUCTION CREDITS 124

8.0 LEAD AGENCY PERMIT CONSISTENCY 133

8.1. PRIOR LEAD AGENCY ACTION 133
8.2. LEAD AGENCY ACTIONS FOR PTO 5651 134

9.0 PERMIT CONDITIONS 135

9.A STANDARD ADMINISTRATIVE CONDITIONS 135
9.B GENERIC CONDITIONS 140
9.C REQUIREMENTS AND EQUIPMENT SPECIFIC CONDITIONS 143
9.D APCD-ONLY CONDITIONS 188

10.0 ATTACHMENTS 193

10.1. CEMS REQUIREMENTS 193
10.2. EMISSION CALCULATION DOCUMENTATION 197
10.3. TANKS, SUMPS, AND SEPARATORS LIST 213
10.4. SOURCE NEI 216
10.5. APCD EXEMPT/PART 70 INSIGNIFICANT EMISSION UNITS 217
10.6. NSPS COMPLIANCE REPORT 218
10.7. APCD RESPONSE TO COMMENTS 224

LIST OF FIGURES AND TABLES

Figure 1.1 Location Map – Santa Ynez Unit Project (Onshore) 15
Figure 1.2 Location Map – Santa Ynez Unit Project (Offshore) 16
Figure 2.1 Exxon – SYU Offshore/Onshore Facility Overview 31
Figure 2.2 Oil Treating Plant and Transportation Terminal Simplified Block Flow Diagram 32
Figure 2.3 Stripping Gas Treating Plant Simplified Block Diagram 33
Figure 2.4 Cogeneration Power Plant Simplified Block Diagram 34
Figure 4.1 SRU/TGCU BACT and Subpart LLL Monitoring Systems 67
Figure 4.2 Las Flores Canyon VRS Block Diagram 81

Table 1.1 Permit Shield for Exxon Mobil – Las Flores Canyon 17
Table 2.1 Stack Gas Descriptions 30
Table 3.1 Generic Federally-Enforceable APCD Rules 49
Table 3.2 Unit-Specific Federally-Enforceable APCD Rules 50
Table 3.3 Non-Federally Enforceable APCD Rules 50
Table 4.1 BACT Control Technology 68
Table 4.2 BACT Performance Standards 70
Table 4.3 Rule 331 Fugitive Inspection and Maintenance Program 73
Table 4.4 Rule 331 BACT Requirements 75
Table 4.5 Source Testing Requirements for the Cogeneration Facility 77
Table 4.6 Source Testing Requirements for the Stripping Gas Treating Plant 78
Table 4.7 Source Testing Requirements for the Equilization Tank 79
Table 4.8 Requirements for Operational and Regional Monitoring 80
Table 4.9 Requirements for Odor Monitoring 80
Table 5.1 Operating Equipment Description 87
Table 5.2 Equipment Emission Factors 90
Table 5.3 Hourly and Daily Emissions 93
Table 5.4 Quarterly and Annual Emissions 96
Table 5.5 Total Permitted Facility Emissions 99
Table 5.6 Federal Potential to Emit 100
Table 5.7 Hazardous Air Pollutant Emission Factors 101
Table 5.8 Hazardous Air Pollutant Annual Emissions 104
Table 5.9 Estimated Exempt Emissions 107
Table 5.10 Facility Net Emissions Increase (NEI-90) 108
Table 6.1 Maximum Concentrations from Onshore Production Facilities in Las Flores Canyon ($\mu g/m^3$) 116
Table 6.2 Maximum Concentrations from Platform Emissions ($\mu g/m^3$) 117
Table 6.3 Maximum Cumulative Onshore Concentrations ($\mu g/m^3$) 117
Table 6.4 Maximum Concentrations for Onshore Flaring Scenario A ($\mu g/m^3$) 118
Table 6.5 Maximum Concentrations for Onshore Flaring Scenario B ($\mu g/m^3$) 118
Table 6.6 Maximum Concentrations for Onshore Flaring Scenario C ($\mu g/m^3$) 119
Table 6.7 Maximum Concentrations for Onshore Flaring Scenario D ($\mu g/m^3$) 119
Table 6.8 Maximum Concentrations for Offshore Flaring Scenario ($\mu g/m^3$) 120
Table 6.9 Maximum Concentrations for Consolidated Onshore Facilities ($\mu g/m^3$) 120
Table 6.10 Increment Analysis ($\mu g/m^3$) 121
Table 7.1 NOx Emission Offset Requirements 126
Table 7.2 ROC Emission Offset Requirements 127
Table 7.3 SOx Emission Offset Requirements 128

Table 7.4 PM Emission Offset Requirements 129
Table 7.5 ESE Project Operation Emissions and Offsets 130
Table 7.6 Disposition of Excess NOx and ROC ESE ERCs 131
Table 7.7 Exxon – SYU Offset Sources for the Entire Source Emissions (ESE) 132
Table 9.1 BACT Concentration Limits 144
Table 9.2 Fees for DAS Operation and Maintenance[(i), (ii)] 177
Table 9.3 Fees for Monitoring and Operation[(i), (ii)] 185
Table 9.4 Fees for Monitoring Data Review and Audit[(i), (ii)] 186
Table 10.1 Emission and Process Parameter Monitoring and Reporting Requirements for the CPP 193
Table 10.2 Emission and Process Parameter Monitoring and Reporting Requirements for the Stripping Gas Treating Plant[1, 7, 8] 194
Table 10.3 Emission and Process Parameter Monitoring and Reporting Requirements for the Oil Treating Plant, Thermal Oxidizer, and Transportation Terminal[1, 6] 195
Table 10.4 Specific CEMs Parameters to be Telemetered to the Data Acquisition System (DAS) 196
Table 10.5 Variables Used in Emissions Calculations 197
Table 10.6 CPP BACT Concentration Calculations 198
Table 10.7 Cogeneration Power Plant Emission Factor/BACT Basis 199
Table 10.8 Combustion Thermal Oxidizer Operating Description 201
Table 10.9 Combustion Thermal Oxidizer Emission Factors 202
Table 10.10 Combustion Thermal Oxidizer Short Term Emissions 203
Table 10.11 Combustion Thermal Oxidizer Long Term Emissions 204
Table 10.12 Crew and Supply Boat Fuel Use Limits 205
Table 10.13 CPP and WGI Fuel Gas Limits 206
Table 10.14 SGTP Incinerator SO_2 Calculations 207
Table 10.15 Fixed Roof Tank Calculations (Tank ABJ-1401 A/B) 208
Table 10.16 Fixed Roof Tank Calculations (Tank ABJ-1402) 209
Table 10.17 Fixed Roof Tank Calculations (Tank ABJ-3401 A/B) 210
Table 10.18 Calculations for Estimated Exempt Emissions 212
Table 10.19 Tanks, Sumps, and Separators List 213
Table 10.20 Exxon – SYU Stationary Source NEI-90 216

ABBREVIATIONS & ACRONYMS

AP-42	USEPA's *Compilation of Emission Factors*
APCD	Santa Barbara County Air Pollution Control District
API	American Petroleum Institute
AQMM R&O	Air Quality and Meteorological Monitoring Protocol
ASTM	American Society for Testing Materials
ATC	Authority to Construct
BACT	Best Available Control Technology
bpd	barrels per day (1 barrel = 42 gallons)
Btu	British thermal unit
CAM	compliance assurance monitoring
CEMS	continuous emissions monitoring
CPP	cogeneration power plant
DCS	Distributed Control System
dscf	dry standard cubic foot
E100	emitters less than 100 ppmv
E500	emitters less than 500 ppmv
EQ	equipment
ESE	entire source emissions
EU	emission unit
°F	degree Fahrenheit
FID	facility identification
gal	gallon
gr	grain
HAP	hazardous air pollutant (as defined by CAAA, Section 112(b))
H_2S	hydrogen sulfide
HRSG	Heat Recovery Steam Generator
I&M	Inspection & Maintenance
ISO	International Standards Organization
k	kilo (thousand)
l	liter
lb	pound
lbs/day	pounds per day
lbs/hr	pounds per hour
LACT	Lease Automatic Custody Transfer
LFC	Las Flores Canyon
LPG	liquid petroleum gas
M	mega (million)
MACT	Maximum Achievable Control Technology
MM	million
MW	molecular weight
NAR	Nonattainment Review
NEI	net emissions increase
NGL	natural gas liquids
NG	natural gas
NH_3	ammonia
NSPS	New Source Performance Standards
NESHAP	National Emissions Standards for Hazardous Air Pollutants
NSCR	non-selective catalytic reduction
O_2	oxygen
OCS	outer continental shelf
OTP	Oil Treating Plant
PI	Process Information System
PM	particulate matter

PM_{10}	particulate matter less than 10 microns
POPCO	Pacific Offshore Pipeline Company
ppm(vd or w)	parts per million (volume dry or weight)
psia	pounds per square inch absolute
psig	pounds per square inch gauge
PRD/PSV	pressure relief device
PTO	Permit to Operate
RACT	Reasonably Available Control Technology
ROC	reactive organic compounds, same as "VOC" as used in this permit
RVP	Reid vapor pressure
scf	standard cubic foot
scfd (or scfm)	standard cubic feet per day (or per minute)
SCR	Selective Catalytic Reduction
SIP	State Implementation Plan
SGTP	Stripping Gas Treating Plant
SOV	Stabilizer Overhead Vapor
SSID	stationary source identification
STP	standard temperature (60°F) and pressure (29.92 inches of mercury)
SYU	Santa Ynez Unit
THC, TOC	total hydrocarbons, total organic compounds
TGCU	Tail Gas Cleanup Unit
tpq, TPQ	tons per quarter
tpy, TPY	tons per year
TT	Transportation Terminal
TVP	true vapor pressure
USEPA	United States Environmental Protection Agency
VE	visible emissions
VRS	vapor recovery system
WGI	Waste Gas Incinerator
w.c.	water column

1.0 Introduction

1.1. Purpose

General. The Santa Barbara County Air Pollution Control District ("APCD") is responsible for implementing all applicable federal, state and local air pollution requirements which affect any stationary source of air pollution in Santa Barbara County. The federal requirements include regulations listed in the Code of Federal Regulations: 40 CFR Parts 50, 51, 52, 55, 60, 61, 63, 68, 70 and 82. The State regulations may be found in the California Health & Safety Code, Division 26, Section 39000 et seq. The applicable local regulations can be found in the APCD's Rules and Regulations. This is a combined permitting action that covers both the Federal Part 70 permit (*Part 70 Operating Permit No. 5651*) as well as the State Operating Permit (*Permit to Operate No. 5651*).

The County is designated an ozone attainment area for federal ambient air quality standards and an ozone nonattainment area for state ambient air quality standards. The County is also designated a nonattainment area for the state PM_{10} ambient air quality standard.

Part 70 Permitting. The initial Part 70 permit for the Las Flores Canyon ("LFC") facility was issued January 11, 2000 in accordance with the requirements of the APCD's Part 70 operating permit program. This permit is the third renewal of the Part 70 permit, and may include additional applicable requirements. The APCD triennial permit reevaluation has been combined with this Part 70 Permit renewal, and this permit incorporates previous Part 70 revision permits PTO 11912, ATC/PTO 12076, PT-70 ADM 12340, and ATC/PTO 13039. The LFC facility is a part of the *Exxon - Santa Ynez Unit ("SYU") Project* stationary source (SSID = 1482), which is a major source for VOC[1], NO_x, CO, and SO_x. Conditions listed in this permit are based on federal, state or local rules and requirements. Sections 9.A, 9.B and 9.C of this permit are enforceable by the APCD, the USEPA and the public since these sections are federally enforceable under Part 70. Where any reference contained in Sections 9.A, 9.B or 9.C refers to any other part of this permit, that part of the permit referred to is federally enforceable. Conditions listed in Section 9.D are "APCD-only" enforceable.

Pursuant to the stated aims of Title V of the CAAA of 1990 (i.e., the Part 70 operating permit program), this permit has been designed to meet two objectives. First, compliance with all conditions in this permit would ensure compliance with all federally-enforceable requirements for the facility. Second, the permit would be a comprehensive document to be used as a reference by the permittee, the regulatory agencies and the public to assess compliance.

1.2. Stationary Source/Facility Overview

1.2.1 Stationary Source/Facility Overview: The LFC facility is part of the *Exxon – SYU Project* stationary source. ExxonMobil Production Company ("ExxonMobil"), an unincorporated division of Exxon Mobil Corporation, owns and operates the facility. The facility is comprised of an oil plant, a stripping gas plant, an NGL/LPG loading facility, a cogeneration power plant and a

[1] VOC as defined in Regulation XIII has the same meaning as reactive organic compounds as defined in Rule 102. The term ROC shall be used throughout the remainder of this document, but where used in the context of the Part 70 regulation, the reader shall interpret the term as VOC.

pipeline transportation terminal. The *Exxon - SYU Project* stationary source consists of the following 5 facilities:

Platform Harmony	(FID= 8018)
Platform Heritage	(FID= 8019)
Platform Hondo	(FID= 8009)
Las Flores Canyon Oil and Gas Plant	(FID= 1482)
POPCO Gas Plant	(FID= 3170)

1.2.2 Facility Permitting History: The LFC facility was originally permitted under ATC 5651 in November of 1987. Since that time, ATC 5651 was modified numerous times. The APCD Permit to Operate for LFC was issued in January of 1999. A brief description of each modification, including the date of issuance, follows:

Permit Number: ATC 5651 Mod-01
Final Issue Date: 12/05/1991
Summary: Increase in NO_x OCS construction emissions by 549 tons.

Permit Number: ATC 5651 Mod-02
Final Issue Date: 07/15/1991
Summary: Temporary decommissioning of the LFC2 ambient air quality monitoring station during the onshore construction period.

Permit Number: ATC 5651 Mod-03
Final Issue Date: 07/09/1993
Summary: Installation of back-up gas sweetening unit; revise thermal oxidizer pilot and purge rates; allow for use of helicopters in lieu of crew boats.

Permit Number: ATC 5651 Mod-05
Final Issue Date: 01/25/1995
Summary: Re-qualification of SO_x ERCs to meet Rule 359 liabilities; removal from permit of the Marine Terminal and associated equipment.

Permit Number: ATC 5651 Mod-06
Final Issue Date: 02/17/1995
Summary: Application to modify Best Available Control Technology was withdrawn by ExxonMobil.

Permit Number: Letter Mod
Final Issue Date: 08/11/1994
Summary: Eliminated ROC Monitoring at Stations LFC Sites 1 and 10.

Permit Number: ATC 9651
Final Issue Date: 12/18/1996
Summary: Implementation of an Enhanced Hydrocarbon I&M Program on selected valves to generate emission reduction credits.

Permit Number: ATC 9651 Mod-01
Final Issue Date: 11/17/1997

Summary: Modification to reduce the number of valves subject to the Enhanced Fugitive Inspection and Maintenance program.

Permit Number: ATC/PTO 9826
Final Issue Date: 01/21/1998
Summary: Implementation of an Enhanced Fugitive Inspection and Maintenance program which created emission reduction credits via DOI 0002.

Permit Number: ATC 9917
Final Issue Date: 07/15/1998
Summary: Modification to post-construction monitoring requirements to allow for the shut down of Site 10 near UCSB.

Permit Number: ATC 5651 Mod-04, -08 through -12, -14 through -16, -18 through -19
Final Issue Date: 10/30/1998 (Mod -19)
Summary: Extensions of the Source Compliance Demonstration Period to, with the final extension under Mod-19 to October 30, 1998 or issuance of PTO 5651, whichever is earlier.

Permit Number: ATC 5651 Mod-17
Final Issue Date: 01/27/1999
Summary: Significant modification of ATC 5651 to incorporate changes in assumptions, operations and emission factors. This permit was superseded by PTO 5651 on the day of issuance.

Permit Number: PTO 5651
Final Issue Date: 01/27/1999
Summary: The APCD operating permit for LFC.

Permit Number: ATC/PTO 5651 Mod-01
Final Issue Date: 05/27/1999
Summary: This combined ATC/PTO permit addressed operation of ambient monitors, revisions to certain parametric monitoring requirements, use of emergency firewater/floodwater pump engines and changes to the use of the Demulsifier tank.

Permit Number: ATC/PTO 10172
Final Issue Date: 09/21/1999
Summary: This combined ATC/PTO permit addressed use of larger crew and supply boats, allowed combustion of ammonia in the thermal oxidizer, revised compliance mechanisms for carbon canisters and the Equalization Tank scrubber and addressed testing and maintenance activities for the gas turbine/steam generator.

Permit Number: Part 70/PTO 5651
Final Issue Date: 01/11/2000
Summary: Initial Part 70 permit. Combined with the APCD triennial permit reevaluation.

Permit Number: ATC 10181
Final Issue Date: 06/08/2000
Summary: Phase II Boat project. Permitting of larger supply boat (Santa Cruz, 4000 bhp) and crew boat (Callie Jean, 3800 bhp). Large increase in short-term PTE and no long-term PTE increase in ozone precursor pollutants.

Permit Number: Part 70/PTO 10181
Final Issue Date: 04/23/2001
Summary: Significant Part 70 permit modification. Combined with APCD PTO permit requirement. (PTO-70R application #10350).

Permit Number: ATC/PTO Part 70 10806
Final Issue Date: 05/17/2002
Summary: Reduced the frequency that ExxonMobil is required to sample utility supplied fuel gas and clarifies that utility supplied fuel gas is continuously monitored for H_2S and Higher Heating Value (HHV).

Permit Number: ATC/PTO Part 70 10990
Final Issue Date: 05/19/2003
Summary: This permit allowed ExxonMobil to decrease their stationary source de minimis ROC emissions total by adding a portion to the stationary source NEI ROC total. The additional ROC NEI was offset by four ERC's generated due to various facility shutdowns.

Permit Number: Part 70/PTO 5651 Mod-01
Final Issue Date: 12/01/2003
Summary: Permit reallocates fuel use limits between main and aux crew boat engines within 3 miles. Clarifies maximum fuel and emission limits for boats w/in miles between Platforms Harmony and Heritage.

Permit Number: ATC/PTO Part 70 11170
Final Issue Date: 4/02/2004
Summary: Enhanced Fugitive Inspection and Maintenance program which created emission reduction credits via DOI 0034. Also see ATC/PTO 11130, ATC 11131 and ATC 11132.

Permit Number: ATC/PTO Part 70 11230
Final Issue Date: 9/24/2004
Summary: Permit Mod to change the dedicated supply boat to a "hybrid" vessel based on Santa Cruz and Pilot Tide engines. ExxonMobil chose not to use the M/V Pilot Tide, so this permit was cancelled.

Permit Number: DOI 0034
Final Issue Date: 10/13/2004
Summary: This ERC application is for the creation of ROC ERCs by decreasing the minor leak detection threshold to 100 ppmv for 919 valves and 2,757 flange/connection components in hydrocarbon service at the POPCO and LFC facilities.

Permit Number: ATC/PTO Part 70 11322
Final Issue Date: 1/04/2005
Summary: Increase in permitted flare purge and pilot volumetric limits to comply with Rule 359 requirement for continuous flare operations.

Permit Number: DOI 0040
Final Issue Date: 03/01/2005

Summary: This ERC application is for the creation of ROC ERCs by decreasing the minor leak detection threshold to 100 ppmv for 159 valves and 449 flanges/connection components in hydrocarbon service at the LFC facility. See ATC/PTO 11410.

Permit Number: ATC/PTO Part 70 11410
Final Issue Date: 3/07/2005
Summary: Enhanced Fugitive Inspection and Maintenance program which created emission reduction credits via DOI 0040.

Permit Number: ATC/PTO Part 70 11459
Final Issue Date: 4/20/2005
Summary: This permit modifies the capacity of the components included in the cogeneration power plant unit due to the replacement of the load gear between the gas turbine and the generator to increase the speed of the generator.

Permit Number: PTO 11600
Final Issue Date: 10/13/2005
Summary: Permits two existing diesel fired firewater pumps [Detroit Diesel DD FP04AT (239 bhp)] subject to the stationary compression ignition ATCM.

Permit Number: PTO 11601
Final Issue Date: 9/22/2005
Summary: Permits an existing diesel fired floodwater pump [Detroit Diesel 103445-1 (230 bhp)] subject to the stationary compression ignition ATCM.

Permit Number: PTO 11912
Final Issue Date: 8/16/2006
Summary: Permits new main propulsion and auxiliary diesel fired IC engines on the M/V Broadbill crew boat.

Permit Number: ATC/PTO 12076
Final Issue Date: 11/6/2006
Summary: This permit reduces the allowable pilot and purge gas flaring volumes to meet the requirements of Rule 359.

Permit Number: PT-70 ADM 12340
Final Issue Date: 8/6/2007
Summary: This administrative change replaced responsible official Greg Manuel with Frank Betts.

Permit Number: ATC/PTO 13039
Final Issue Date: XXXX
Summary: This permit incorporates fugitive components originally installed under the de minimis exemption of Rule 202 into the PTO. The addition of these components results in a NEI and the increase in emissions is offset by part of ERC No. 0.128-1009. ATC/PTO 13039 is being issued as part of this permit reevaluation.

1.3. Emission Sources

The emissions from the LFC facility come from a gas turbine, a heat recovery steam generator, oil storage tanks, a waste gas incinerator, various sumps, pumps and compressors, a pig receiver, a thermal oxidizer, three diesel-fired water pump engines, crew boats which serve the platforms, and fugitive components. Section 4 of this permit provides the APCD's engineering analyses of these emission sources. Section 5 of this permit describes the allowable emissions from each permitted emissions unit and also lists the potential emissions from non-permitted emission units.

1.4. Emission Control Overview

Air pollution emission controls are utilized at the LFC facility. The emission controls employed at the facility include:

- An Inspection & Maintenance program for detecting and repairing leaks of hydrocarbons from piping components and the shipping pumps to reduce ROC emissions by approximately 80 percent, consistent with the BACT requirements of ATC 5651 and modifications thereof, NSPS KKK and Rule 331.

- Use of water injection, low-NO_x burners and Selective Catalytic Reduction (ammonia injection) at the Cogeneration Power Plant.

- Use of a thermal oxidizer for the combustion of waste gases.

- Use of pipeline quality natural gas as fuel gas for all gas combustion units.

- Use of a 3-stage Claus process with a Flexsorb SE tail gas cleanup unit.

- Use of vapor recovery on the two 270,000 barrel oil storage tanks.

- Use of Low-NO_x burners and NSCR at the sulfur recovery unit tail gas incinerator.

- Use of vapor recovery systems to collect hydrocarbon vapors from various tanks, sumps, separators and drains.

- Use of carbon canisters to collect hydrocarbons and total reduced sulfur compounds at specified tanks, sumps, separators, drains and on vacuum trucks which service this equipment.

- Use of vapor recovery, a venturi scrubber, carbon canisters and a gas sweetening unit (SulfaTreat) to eliminate hydrogen sulfide emissions from specified tanks, sumps, separators and drains.

- Use of turbo-charging, inter-cooling and ignition timing retard on crew and supply boat engines (or equivalent technology).

- An Enhanced Inspection & Maintenance program for detecting and repairing leaks of hydrocarbons from standard valves and flanges/connection at a lower threshold of 100 ppmv to create emission reduction credits.

1.5. Offsets/Emission Reduction Credit Overview

1.5.1 Offsets: Emissions from the LFC facility must be offset pursuant to the APCD's New Source Review regulation. Offsets are required for ROC, NO_x, SO_x, PM and PM_{10}. Section 7 details the offset requirements for the SYU Project. In addition, ExxonMobil is required via their Lead Agency permit to offset all SYU Expansion Project emissions of ozone pre-cursor pollutants (i.e., ROC and NO_x). These are known as Entire Source Emissions (ESE) offsets.

1.5.2 ERCs: ExxonMobil has generated 1.56 tons per year of ROC ERCs in order to offset emission increases from compressor skid projects at Platforms Harmony and Heritage (PTO 9640 and PTO 9634 respectively). In addition, on January 20, 1998 ExxonMobil obtained ERC Certificate No. 0004 for 0.18 tpq of ROCs assigned to increased ROC fugitive emissions from gas pipeline project topsides tie-ins at Platforms Harmony and Heritage (ATC 9827, ATC 9828) respectively.

Per DOI 0034 LFC generated 0.488 TPQ ROC (1.953 TPY) due to implementation of an enhanced fugitive inspection and maintenance program as permitted under ATC/PTO 11170. Per DOI 0040 LFC generated 0.198 TPQ ROC (0.791 TPY) due to implementation of an enhanced fugitive inspection and maintenance program as permitted under ATC/PTO 11410.

1.6. Part 70 Operating Permit Overview

1.6.1 Federally-Enforceable Requirements: All federally enforceable requirements are listed in 40 CFR Part 70.2 (*Definitions*) under "applicable requirements." These include all SIP-approved APCD Rules, all conditions in the APCD-issued Authority to Construct permits and all conditions applicable to major sources under federally promulgated rules and regulations. All permits (and conditions therein) issued pursuant to the OCS Air Regulation are federally enforceable. All these requirements are enforceable by the public under CAAA. (*see Section 3 for a list of the federally enforceable requirements)*

1.6.2 Insignificant Emissions Units: Insignificant emission units are defined under APCD Rule 1301 as any regulated air pollutant emitted from the unit, excluding HAPs, that are less than 2 tons per year based on the unit's potential to emit and any HAP regulated under section 112(g) of the Clean Air Act that does not exceed 0.5 ton per year based on the unit's potential to emit. Insignificant activities must be listed in the Part 70 application with supporting calculations. Applicable requirements may apply to insignificant units. See Attachment 10.4 for a list of Part 70 insignificant units.

1.6.3 Federal Potential to Emit: The federal potential to emit ("PTE") of a stationary source does not include fugitive emissions of any pollutant, unless the source is: (1) subject to a federal NSPS/NESHAP requirement, or (2) included in the 29-category source list specified in 40 CFR 51.166 or 52.21. The federal PTE does include all emissions from any insignificant emissions units. (*See Section 5.4 for the federal PTE for this source)*

1.6.4 Permit Shield: The operator of a major source may be granted a shield: (a) specifically stipulating any federally-enforceable conditions that are no longer applicable to the source and (b) stating the reasons for such non-applicability. The permit shield must be based on a request from the source and its detailed review by the APCD. Permit shields cannot be indiscriminately granted with respect to all federal requirements. ExxonMobil has made a request for a permit shield. Table 1.1 summarizes the permit shield granted to ExxonMobil.

1.6.5 Alternate Operating Scenarios: A major source may be permitted to operate under different operating scenarios, if appropriate descriptions of such scenarios are included in its Part 70 permit application and if such operations are allowed under federally-enforceable rules. ExxonMobil made no request for permitted alternative operating scenarios.

ExxonMobil lists their main operating scenario as: "The LFC facilities are an oil and gas processing plant (SIC 1311), which produces products such as crude oil, gas, propane, mixed butane, sulfur and electrical power. The facility also produces byproducts from crude oil and gas production. Normal facility operations include periods of startup, shutdown and turnaround. Periodically, malfunctions may occur."

1.6.6 Compliance Certification: Part 70 permit holders must certify compliance with all applicable federally-enforceable requirements including permit conditions. Such certification must accompany each Part 70 permit application; and, be re-submitted annually on or before March 1st or on a more frequent schedule specified in the permit. Each certification is signed by a "responsible official" of the owner/operator company whose name and address is listed prominently in the Part 70 permit. (*see Section 1.6.9 below)*

1.6.7 Permit Reopening: Part 70 permits are re-opened and revised if the source becomes subject to a new rule or new permit conditions are necessary to ensure compliance with existing rules. The permits are also re-opened if they contain a material mistake or the emission limitations or other conditions are based on inaccurate permit application data. This permit is expected to be re-opened in the future to address new monitoring rules, if the permit is revised significantly prior to its first expiration date. *(see Section 4.11.3, CAM Rule).*

1.6.8 Hazardous Air Pollutants ("HAPs"): The requirements of Part 70 permits also regulate emission of HAPs from major sources through the imposition of maximum achievable control technology ("MACT"), where applicable. The federal PTE for HAP emissions from a source is computed to determine MACT or any other rule applicability. (*see Sections 4.15 and 5.5)*.

1.6.9 Responsible Official: The designated responsible official and their mailing addresses are:

Mr. Greg C. Manuel (Relief SYU Operations Superintendent)
ExxonMobil Production Company
12000 Calle Real
Goleta, CA 93117

Telephone: (805) 961-4078

and

Mr. James D. Siegfried (Operations Manager)
ExxonMobil Production Company
PO Box 4697
Houston, TX 77210-4697

Telephone: (713) 431-2047

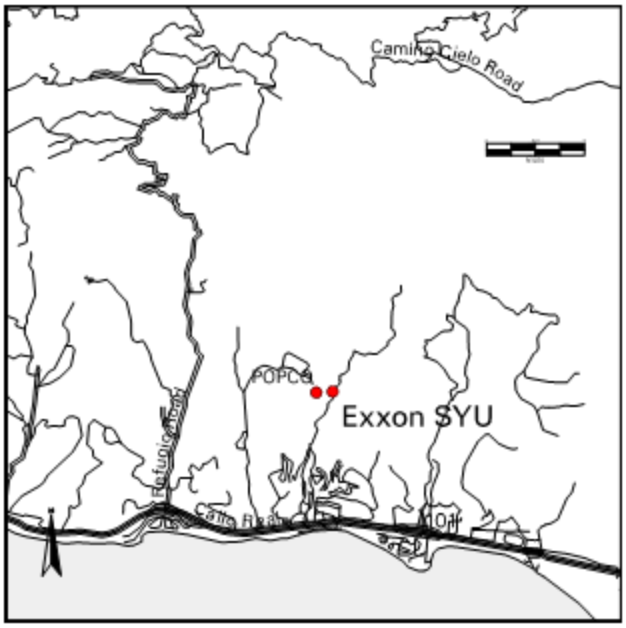

Figure 1.1 Location Map – Santa Ynez Unit Project (Onshore)

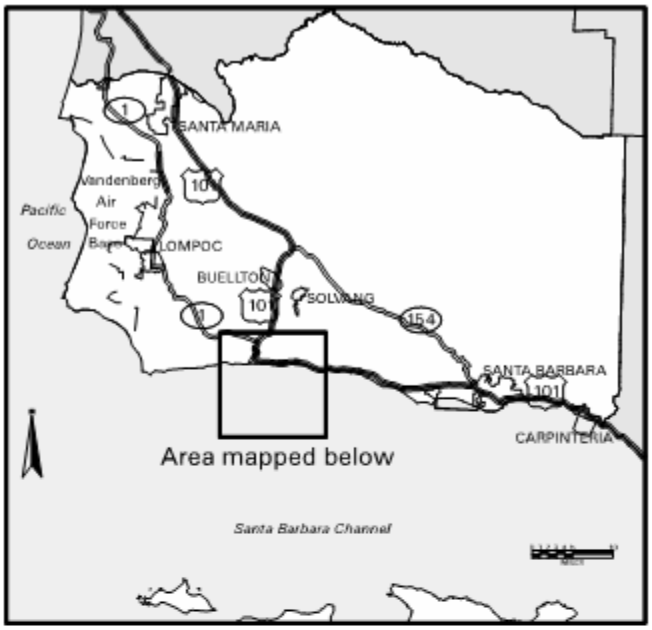

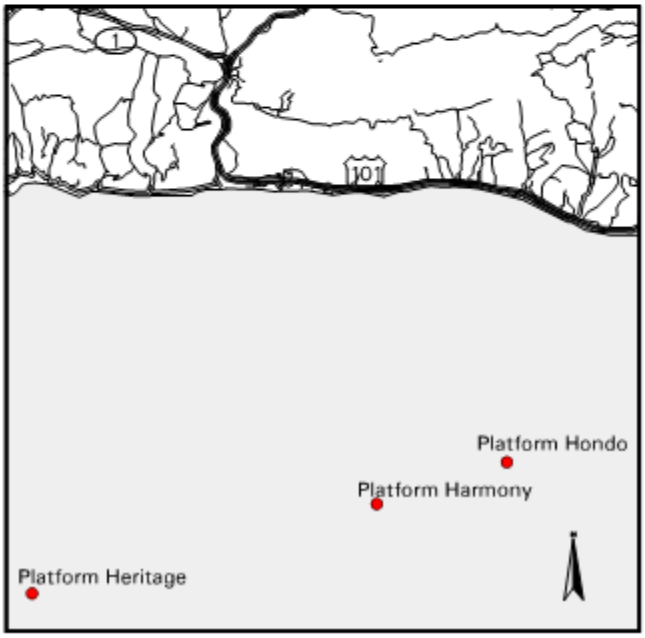

Figure 1.2 Location Map – Santa Ynez Unit Project (Offshore)

Table 1.1 Permit Shield for Exxon Mobil – Las Flores Canyon

Applicable Rule/Regulation	Affected Emission Unit(s)	Justification for Granting Permit Shield
APCD Rule 328.H.1	SGTP Waste Gas Incinerator (EQ No. 12-2)	Section H.1 requires NO_x to be reported at 3% oxygen. Table 4.2 (*BACT Performance Standards*) defines a NO_x standard for the WGI to be reported at 2% oxygen. Compliance determinations based on the 2% readings is deemed adequate for ensuring compliance with Section H.1
APCD Rule 342.E.3	CPP Heat Recovery Steam Generator (EQ No. 1-2)	Section E.3 prohibits the use of anhydrous ammonia. APCD memo dated March 8, 1994 clarifies that this Section does not apply to facilities that received approval to use anhydrous ammonia prior to the date of rule adoption (March 10, 1992). ExxonMobil received approval in 1987.
40 CFR 60.42b NSPS Db	CPP Heat Recovery Steam Generator (EQ No. 1-2)	This Section's standard for sulfur dioxide does not apply since the emissions unit is only fired on natural gas.
40 CFR 60.43b NSPS Db	CPP Heat Recovery Steam Generator (EQ No. 1-2)	This Section's standard for particulate matter does not apply since the emissions unit is only fired on natural gas.
40 CFR 60.44b NSPS Db	CPP Heat Recovery Steam Generator (EQ No. 1-2)	This section establishes a NO_x limit of 0.20 lb/MMBtu using 30 day rolling average. APCD BACT requirements for NO_x in Table 4.2 require a limit of 0.03 lb/MMBtu averaged over 15-minutes. Compliance with the APCD's BACT requirements (during Normal Operations Mode and HRSG Only Mode) ensures compliance with the applicable NSPS requirement.
40 CFR 60.48b(h) NSPS Db	CPP Heat Recovery Steam Generator (EQ No. 1-2)	This section exempts a source from the requirements to install and operate a NO_x CEMS if it is subject to the standards of Section 60.44b(a)(4). Since ExxonMobil is subject to Section 60.44b(a)(4), this Section 60.48b(h) does not apply. [2]
40 CFR 60.334(b)(2) NSPS GG	CPP Gas Turbine (EQ No. 1-1)	Compliance with the requirement of daily monitoring of the sulfur content of the natural gas fuel is accomplished via the use of a continuous H_2S monitor along with quarterly sample for total sulfur.
40 CFR 60.630 NSPS KKK	CPP/SGTP/TT Fugitive Hydrocarbon Emission Components (EQ No. 3-x and 4-x)	This NSPS only applies to gas processing facilities (SGTP) and all associated vapor recovery equipment feeding the SGTP (whether inside the gas plant or not).

[2] This does not exempt ExxonMobil from their NSR/PSD permit requirements to install and operate the NO_x CEMS required pursuant to ATC 5651.

-- This page left blank intentionally --

2.0 Description of Project and Process Description

2.1. Project and Process Description

2.1.1 Project Ownership: ExxonMobil is the major owner and operator of the SYU offshore and onshore facilities.

2.1.2 Geographic Location: The onshore facilities are located in Las Flores Canyon approximately 20 miles west of Santa Barbara, California in the southwestern part of Santa Barbara County. The ExxonMobil property consists of a pie-shaped piece of property, approximately 1500 acres, starting on the north side of Highway 101 and continuing to the north. Of this area, approximately 110 acres have been cleared with 34 acres containing facilities and the remainder left as open space. A paved road about 1.5 miles long from Calle Real, the frontage road off Highway 101, provides access to the facility.

Within the ExxonMobil property, approximately 17 acres is leased to Pacific Offshore Pipeline Company ("POPCO") to operate a natural gas treating facility. In addition, small areas are provided for installation of utility connections by Southern California Gas Company ("SCG") and Southern California Edison Company ("SCE") as well as a pump station by the All American Pipeline Company for crude transportation.

The ExxonMobil property is located within the western part of the Transverse Ranges physiographic province of Southern California. This region is characterized by predominately east-west oriented topographic and structural elements. The canyons area is predominately rural in character, with some agricultural and industrial uses present.

2.1.3 Facility Description: The SYU Project develops production from three platforms (Platforms Hondo, Harmony and Heritage) located offshore California in the Santa Barbara Channel. The production is transported to shore through a subsea pipeline and treated in new production facilities located in Las Flores Canyon. Overall recovery from the development totals approximately 500 million barrels of crude oil and almost one trillion cubic feet of natural gas.

The onshore facility is subdivided into the following plants:

- Oil Treating Plant ("OTP")
- Stripping Gas Treating Plant ("SGTP")
- Transportation Terminal ("TT")
- Cogeneration Power Plant ("CPP")

The onshore facilities receive the produced crude/water/gas emulsion from the offshore platforms via the 20-inch emulsion pipeline and produced gas from the platforms via the POPCO transportation system. The onshore facilities produce oil, propane, butane, and sulfur products for sale and fuel quality gas for process needs and power generation of process heat and electricity. The recovered produced water is treated to acceptable standards and returned to Harmony for release to the ocean.

An overview of the SYU offshore/onshore facilities is shown in Figures 2.1, 2.2, 2.3 and 2.4 and Table 2.1. The data shown in the figures and table are not enforceable. See Section 9 of this

permit for what is enforceable. Rates provided for key streams represent design base case conditions.

2.1.3.1 Oil Treating Plant (OTP): The Oil Treating Plant, located at the north end of LFC, receives oil and water in the form of an emulsion from the offshore platforms. The OTP dehydrates, stabilizes, and sweetens the crude oil to meet product specifications. The separated, produced water is filtered, degassed and biologically treated with both anaerobic and aerobic bacteria to reduce dissolved oil and grease so that it is suitable for ocean disposal.

Two oil treating trains, each with a daily capacity of 50 KBPD of treated oil, are currently installed. This permit allows a third oil treating train to be constructed in the future. The utility support systems and plant layout are designed to support 125 KBPD of oil on an annual average basis or 140 KBPD of oil on a stream day basis. The existing two water treating trains have a total capacity of 60 KBPD of water. If the additional water treating train is installed, it will increase the capacity of the plant to 90 KBPD of water.

2.1.3.2 Transportation Terminal (TT): The Transportation Terminal, located southeast of the OTP, consists of two 270 KB storage tanks, 3 pipeline booster pumps and support facilities necessary to store oil received from the OTP and ship through the All American Pipeline system. The booster pumps are designed to ship crude at various rates up to 300 KBPD.

Also located in the Transportation Terminal are the water outfall pipeline pig launcher and emulsion pipeline pig receiver.

2.1.3.3 Stripping Gas Treating Plant (SGTP): The Stripping Gas Treating Plant, located on the west side of the OTP just north of the POPCO plant, processes up to 21 MSCFD of gas from the OTP, and Hondo, Heritage and/or Harmony Platforms, to produce a sweet fuel gas for use in the onshore facilities, Natural gas liquids ("NGLs") and sulfur are also produced.

The recovered NGL products are sweetened and fractionated to produce up to 2900 BPD of a sales quality propane and 2600 BPD of a mixed butane product. Acid gases from the fuel gas amine system, NGL sweetening system and OTP water treating system are treated in a sulfur recovery unit (combination Claus and tail gas units) to produce up to 20 LT/D specification sulfur product. A small quantity of acid gas remaining after cleanup in the tail gas unit is incinerated.

2.1.3.4 Cogeneration Power Plant (CPP): The 49 MW Cogeneration Power Plant, located on the east side of the OTP, consists of a natural gas fueled GE Frame 6 Gas Turbine Generator with a rated output of 39 MW and a non-condensing steam turbine rated at 10 MW. The CPP generates electric power to supply both the onshore facilities and the offshore platforms.

Heat from the gas turbine exhaust is recovered in a waste Heat Recovery Steam Generator ("HRSG") to generate steam to supply the LFC process heat requirements. This system is also supplementary fired with fuel gas to provide heat to maintain operations when the turbine is down.

The SYU power plant operates in parallel with the SCE utility system. SCE provides emergency backup and supplemental power during peak demand periods. This tie-in also provides the flexibility to sell power to SCE when the plant generating capacity exceeds the SYU power demand.

2.1.4 Process Description: The onshore processing systems, which are described below, have been divided into the following areas:

- Oil Treating Plant ("OTP")
- Produced Water Treating System ("WTS")
- Transportation Terminal ("TT")
- Stripping Gas Treating Plant ("SGTP")
- Cogeneration Power Plant ("CPP")

2.1.4.1 Oil Treating Plant: The OTP oil facilities have been divided into the following process systems:

- Emulsion Metering and Rerun System
- Crude Heat Exchange and Dehydration
- Crude and Condensate Stabilization, Gas Compression
- Thermal Oxidizer

Figure 2.2 shows a simplified block flow diagram of the Oil Treating Plant.

2.1.4.1.1 Emulsion Metering and Rerun System: The Emulsion Metering and Rerun System measures the volume of inlet emulsion received from the offshore emulsion pipeline system and distributes the emulsion to the two parallel oil treating trains. The metered emulsion is combined with any recycle from the crude rerun tanks and sent to the crude heat exchangers. Two 30 KBPD rerun tanks are available to temporarily store or rerun any excess production or off spec product.

2.1.4.1.2 Crude Heat Exchange and Dehydration: The Crude Heat Exchange and Dehydration System heats the emulsion to approximately 220°F, separates the sour gas and free water from the emulsion in a free water knockout ("FWKO") and dehydrates the crude with electrostatic treaters. The FWKO in each train is sized to handle 50 KBPD oil and 40 KBPD water. Separated water is sent to the produced water treating system, flashed gas is sent to the condensate stabilizer and the emulsion to the electrostatic emulsion treaters for further water removal. Each train has two electrostatic emulsion treaters in parallel which dehydrate the emulsion to 1 percent BS&W to meet product specifications.

2.1.4.1.3 Crude and Condensate Stabilization, Gas Compression: The Crude and Condensate Stabilization/Gas Compression System serves to sweeten and stabilize the crude to meet product specifications and recover NGLs from the inlet stream. The crude stabilizer receives the sour dehydrated crude from the emulsion treaters and strips H_2S, light gases and NGL components from the crude, stabilizing the crude to the required vapor pressure. Sweet stabilized bottom produced from the crude stabilizer is metered in the sweet crude ACT unit before flowing to the Transportation Terminal. The gas from the crude stabilizer overhead is compressed in two stages to approximately 350 psig. Hot gas from the second stage of compression along with the condensed interstage liquids flow to a condensate stabilizer. This stabilizer removes most of the H_2S and lighter components from the condensate for processing in the SGTP and recycles the heavy ends (mostly C5+) back to the crude stabilizers.

2.1.4.1.4 Thermal Oxidizer: The Thermal Oxidizer located east of the OTP burns waste gases from the four flare systems: low pressure ("LP") flare, high pressure ("HP") flare, acid

gas ("AG") flare and ammonia tank pressure relief. The Thermal Oxidizer is designed to handle varying flow rates with smokeless combustion. Combustion occurs at multiple burners near grade level inside a protective wind fence. Burners for the four different flare systems are arranged in several stages, each with its own pilot. The first stage is sized for low flaring rates with additional stages automatically added as the flaring rates increase. A flare gas sampling system is also provided to capture representative samples of the gases flared in the LP, HP and AG systems.

Each of the LP, HP and AG flare systems is made up of a network of flare collection headers, a flare scrubber, and a flare liquid pump. The flare headers collect the discharged vapors for each system from appropriate relief valves, pressure control valves, and manual blow down valves on tanks and vessels located in the process units. The flare scrubber separates any liquid from the gas prior to discharge to the Thermal Oxidizer. Liquids are pumped to the closed drain system or the Rerun Tanks.

2.1.4.2 Produced Water Treating System ("WTS"): The produced water treating system is located within the OTP. It treats the produced water removed from the oil/water emulsion as well as miscellaneous process waste water streams. The system is designed to handle a feed stream containing an average of 260 mg/l of dissolved oil and grease plus significant amounts of dissolved solids, sulfides, carbon dioxide, biodegradable materials and suspended solids. The final liquid effluent is designed to contain only trace contaminants well within the NPDES discharge limits.

The produced water treating system facilities have been divided into the following process areas:

- Free Oil Removal
- Degassing
- Equalization and Anaerobic Treating
- Aeration and Clarification
- Sludge Removal and Handling System

Figure 2.2 shows a simplified flow diagram of the WTS.

2.1.4.2.1 Free Oil Removal: The Free Oil Removal system removes entrained oil and solids from the produced water by passing it through two Pressurized Plate Separators (PPS) operating in parallel. Oil dumps intermittently to the closed drain system. Solids, accumulating in coned bottoms of the PPS, are discharged to the Oily Sludge Thickener. Water exiting the PPS, containing less than 50 mg/l free oil and 50 mg/1 suspended solids, feeds two Media Filters that operate in parallel and further reduce the oil and suspended solids to approximately 10 mg/l each. The Oily Sludge Thickener bottoms can be blended back into the crude stream or sent to the Sludge Removal and Handling System.

2.1.4.2.2 Degassing: The Degassing system removes dissolved sulfur compounds to allow proper operation of the downstream biological treatment systems. The Degassing unit is designed as a single train for a produced water rate of up to 90 KBPD. The incoming water feed is acidified to a pH of 5.8 and fed to a Vacuum Flash Tower operating at -10 psig which reduces the hydrogen sulfide to 50 ppm or less. Flashed sour vapors are sent

to the SGTP Sulfur Recovery Unit. The hot Vacuum Flash effluent water flows to the Equalization Tank.

2.1.4.2.3 Equalization and Anaerobic Treating: The Equalization and Anaerobic treating area converts soluble grease, oil and organic acids, through bacterial digestion, to a gas mixture composed of methane, carbon dioxide, hydrogen sulfide and water vapor. Water from the Equalization Tank is neutralized to 7.0-8.0 pH, cooled to approximately 100°F and mixed with appropriate nutrients prior to entering the Anaerobic Filter. In the anaerobic filter, water flows up through a packed core in contact with resident bacteria. The gas produced by the bacteria is released to the Vapor Recovery System for further processing. Some of the exit water is continuously recycled back to the Anaerobic Filter with the remainder sent to the Aeration Basin for aerobic biological treatment.

2.1.4.2.4 Aeration and Clarification: The Aeration and Clarification Area removes 90% of the remaining soluble contaminants in the water by means of biological oxidation (biox). The water is contacted with new and recycled aerobic microorganisms (activated sludge) in two highly aerated Aeration Basins. The overflow passes through the two Clarifiers (large retention basins) where activated sludge and water are separated.

Effluent water from the Clarifier is collected in the Outfall Batch Tank. This treated water is transferred to the Harmony Platform for discharge to the ocean.

The activated sludge settles to the bottom of the Clarifiers where it is continuously withdrawn and recycled back to the Aeration Basins. A slip stream of sludge is sent to the Sludge Removal and Handling System.

2.1.4.2.5 Sludge Removal and Handling System: The Sludge Removal and Handling System uses centrifuges to de-water the biox sludge removed from the Clarifiers and oily sludge from the Free Oil Removal portion of the plant. The oil sludge cake is discharged into tote bins vented to carbon canisters for truck transfer to an approved disposal site. The liquid from the centrifuge is recycled and mixed with the water feed to the Aeration System.

2.1.4.3 Transportation Terminal: The TT facilities have been divided into the following process systems:

- Crude Oil Storage and Shipping
- Crude Tank Blanketing and Vapor Recovery

Figure 2.2 shows a simplified block flow diagram of the TT.

2.1.4.3.1 Crude Oil Storage and Shipping: Treated crude oil can be either stored in two crude storage tanks or sent directly to the pipeline booster pumps. The tanks are cone roof type with an internal floating roof containing blanket gas in the vapor space.

The crude can be heated to maintain the appropriate viscosity by recirculating crude product via the pipeline booster pumps through the pipeline heater and back to the tanks. Mixers are provided in the crude storage tanks to maintain any sediment and water in suspension.

Treated crude oil from the OTP is received in the transportation terminal on a continuous basis. Three centrifugal pipeline booster pumps rated at 50 psig discharge are provided

to ship crude at rates up to 300 KBPD. One to two pumps are normally required with the third pump as a standby spare.

2.1.4.3.2 Crude Tank Blanketing and Vapor Recovery: The crude tank blanketing and vapor recovery system will maintain the pressure (between 0.3" and 1.3" water column) in the vapor space between the floating roof and the external fixed cone roof. Vapor is made up from the fuel gas system as needed. When there is a displacement of vapor, it is routed to the tank vapor recovery compressor. Compressed vapors are transferred to the OTP vapor recovery unit for further compression and ultimate treatment in the SGTP.

2.1.4.4 Stripping Gas Treating Plant: The SGTP facilities have been divided into the following process systems:

- Gas Separation and Cooling
- Deethanizer System
- Fuel Gas Sweetening
- NGL Sweetening
- Depropanizer System, Propane Drying and NGL Storage
- Sulfur Recovery Unit
- Waste Gas Incinerator

Figure 2.3 shows a simplified block flow diagram of the SGTP.

2.1.4.4.1 Gas Separation and Cooling: The gas separation and cooling system separates the liquids out of both the transported platform gas and the sour OTP gas prior to sending these feed streams to the Deethanizer. The sour transported platform gas from the POPCO pipeline flows through an expansion valve where the pressure is dropped from 900 psig to 345 psig thereby cooling the gas to about 18°F. Liquids that condense are separated and sent to the deethanizer, with the gas sent to the fuel gas sweetening unit. The sour OTP gas is cooled; the condensed liquids are separated and sent to the deethanizer, with the gas going to the fuel gas sweetening unit.

2.1.4.4.2 Deethanizer System: The deethanizer system separates the light end components, (i.e., H_2S, methane, ethane, and carbon dioxide), from the NGLs in the inlet feed. The deethanizer tower is used to control the light end composition of the NGL propane product and the heating value of the fuel gas. The deethanizer overhead product combines with the raw conditioned gas from the gas separation and cooling system and proceeds to the fuel gas sweetening process. The deethanizer bottom product (NGL product) is sent to the NGL sweetening system.

2.1.4.4.3 Fuel Gas Sweetening: The fuel gas sweetening system removes contaminants from the sour gas to obtain sweet gas for use in the onshore facilities. The design rate for the system is approximately 15 MSCF/D with backup and supplemental sweet pipeline gas available from the local utility (Southern California Gas Company). The gas is sweetened in a 30 tray amine contactor where the amine solvent absorbs carbon dioxide, hydrogen sulfide, and other sulfur compounds. The sweetened gas leaving the top of the amine contactor then goes to the fuel and blanket gas systems. The rich amine, containing the acid gas compounds, is regenerated and recirculated, with the resulting acid gas sent to the sulfur recovery unit.

2.1.4.4.4 NGL Sweetening: The NGL sweetening system removes the carbon dioxide, hydrogen sulfide, carbonyl sulfides ("COS"), and mercaptans from the raw NGL (Deethanizer bottoms). The NGL sweetening process consists of a COS conversion step followed by treatment in an NGL amine contactor where most of the H_2S and CO_2 is removed. The NGLs from the contactor are further treated by a COS polishing step to remove any remaining COS. The rich amine is regenerated and recirculated with the resulting acid gases sent to the sulfur recovery unit. The treated NGLs then enters a caustic pre-wash tower followed by a Merox (catalyzed caustic) contactor tower to remove any mercaptans. The sweetened NGL then goes to the depropanizer.

2.1.4.4.5 Depropanizer System Propane Drying and NGL Storage: The depropanizer system separates the treated sweet NGL into a commercial grade propane and a mixed butane spec product in a 26 tray tower. The mixed butane product (containing up to 20% propane) is sent directly to storage, while the propane product goes through a molecular sieve drier where any water is removed before going to storage. Four 88,000 gallon pressurized NGL storage tanks are provided. Normally two of the tanks will be used for propane and two for the mixed butanes. In addition, there is a 21,000 gallon vessel for off-spec liquids. Two truck loading stations, designed for handling 250 gpm each, are available for loading propane or mixed butanes.

2.1.4.4.6 Sulfur Recovery Unit: The Sulfur Recovery Unit ("SRU"), consisting of a Claus Unit and a Tail Gas Cleanup Unit, followed by a Waste Gas Incinerator, is designed to recover 99.9% of the sulfur in the inlet gas under full load conditions and produce a specification sulfur product for sale. The recovered molten sulfur is stored in a sulfur tank at the SGTP and periodically pumped into sulfur trucks. The SRU is designed for high turndown (approximately 1 LT/D to design rate of 20 LT/D) due to the expected variations in operations. Recovery will decline at levels below the design rates.

The Claus Unit, which converts hydrogen sulfide (H_2S) to sulfur, contains a Combustor, three Claus Reactor Beds, Sulfur Condensers and Waste Heat Recovery Systems. Concentrated acid gas from the Tail Gas Cleanup Unit enters the SRU combustor where a portion of the H_2S is burned to form sulfur dioxide (SO_2). In the Claus reaction H_2S and SO_2 react to form sulfur and water. The hot combustor gas is cooled to recover waste heat and sulfur and then cycled through the three catalytic reactor beds where the reaction continues. On each pass, the gas is cooled to condense any produced sulfur prior to being reheated and entering the next stage. The gas from the last condenser is sent to the Tail Gas Cleanup Unit for further removal of any remaining sulfur compounds.

The Tail Gas Cleanup Unit ("TGCU") converts all of the sulfur compounds in the received gas to H_2S, recovers the H_2S in an amine system and recycles the concentrated acid gas back to the Claus Unit. Gas entering the TGCU from the Claus unit is combusted and hydrogenated in a reactor bed to convert the non-H_2S sulfur compounds to H_2S. The gases are cooled to recover waste heat, contacted with a mild caustic solution to remove any traces of SO_2 and then combined with feed acid gas from the fuel gas and LPG amine units. The combined stream is treated in a 12 tray amine contactor to remove the H_2S. The concentrated acid gas from the amine regenerator is combined with acid gas from the OTP water treating unit (vacuum tower) and recycled back to the Claus Unit. The gas exiting the tail gas amine contactor contains mostly CO_2 and water vapor with trace amounts of hydrocarbons and sulfur compounds and is sent to the waste gas incinerator.

2.1.4.4.7 Waste Gas Incinerator: The waste gas incinerator oxidizes trace amounts of hydrocarbons and sulfur compounds contained in the TGCU waste gas and the Merox system vent gas to an environmentally acceptable gas that can be dispersed to the atmosphere. The incinerator is designed for a H_2S and hydrocarbon destruction efficiency greater than 99.9% using a minimum of auxiliary firing to minimize NO_x emissions. A thermal De-NO_x system is included to further reduce NO_x emissions by reacting ammonia with the hot flue gases.

2.1.4.5 Cogeneration Power Plant: The Cogeneration Power Plant ("CPP") facilities have been divided into the following process systems:

- Gas Turbine Generator
- Heat Recovery Steam Generator
- Steam Turbine/Generator
- Steam Distribution System

Figure 2.4 shows a simplified block flow diagram of the CPP.

2.1.4.5.1 Gas Turbine/Generator: The Gas Turbine/Generator installed in the CPP is a General Electric ("GE") Industrial type, Frame 6 simple cycle, single shaft unit rated at 39 MW. The turbine drives a GE 5163 RPM, 47.9 MVA rated synchronous generator. The gas turbine fuel is natural gas from the SGTP or the local utility.

For NO_x control, the gas turbine is equipped with a steam injection manifold system. An exhaust bypass damper is provided to vent exhaust to the atmosphere for turbine startup and to allow operation of the HRSG using duct burners when the turbine is down.

2.1.4.5.2 Heat Recovery Steam Generator ("HRSG"): The exhaust from the turbine/generator enters the HRSG where steam is produced to meet the LFC process heat requirements. A duct burner section located upstream of the HRSG may be supplementally fired with fuel gas to provide additional heat when necessary or generate adequate heat to maintain operations when the turbine is down. For the latter case, two auxiliary air blower fans provide the combustion air for the duct burners.

The HRSG also includes a Selective Catalytic Reduction ("SCR") section which uses ammonia and a catalyst to reduce NO_x by 80 percent.

2.1.4.5.3 Steam Turbine/Generator: The CPP includes a non-condensing back pressure steam turbine driving an 1800 RPM, 11.5 KVA rated 0.85 power factor synchronous generator unit rated at approximately 10MW.

The steam turbine utilizes 700 psig superheated steam from the HRSG and exhausts the steam to the 65 psig process heating system. Excess 700 psig superheated steam is by-passed around the turbine/generator to the 65 psig process level.

2.1.4.5.4 Steam Distribution System: The steam distribution system for the CPP is composed of four systems:

- 700 psig superheated steam for the steam turbine
- 700 psig saturated steam for process heating

- 65 psig saturated steam for process heating
- 20 psig saturated steam for process heating

This steam is distributed throughout the process facilities to supply system requirements. Heat recovery within the SRU also contributes to the generation of steam for the 65 psig and 20 psig systems.

2.1.5 Emission Source Description: There are four emission source "stacks" in LFC. They are:

- CPP HRSG Bypass Stack
- CPP HRSG Main Stack
- SGTP Incinerator Stack
- OTP Thermal Oxidizer Stack

Table 2.1 lists the high/low/normal ranges of significant operating parameters relating to each of the emission sources.

ExxonMobil's application – specifically "Option B Onshore and Nearshore Facilities, Volume I Exhibits A, C & D: Facilities Technical Data and Volume II Air Emissions Analysis" – provides the detailed descriptions of all the processes and equipment subject to permit.

2.1.6 Offshore Process Description:

2.1.6.1 *Crew Boats*: Crew/Utility boats (hereinafter referred as "crew boats") and Supply/Work boats (hereinafter referred to as "supply boats") are used for a variety of purposes in support of the platform. Crew boats typically average about 4-6 round trips per day between the platform and Ellwood or other piers or ports and are used for the following activities:

1. Load, transport (receipt, movement and delivery) and unload personnel, supplies, and equipment to and from the platforms and dock or pier locations for routine operations and special logistic situations, [Examples: transport of drilling/workover fluid, casing, specialty chemicals, cement or other supplies].
2. Support supply/work boat while it is working at the platforms, [Examples: hold supply boat in position and transfer equipment or supplies].
3. Operate boat engines to maintain boat positioning while working at the platforms, docks, or piers or in open waters.
4. Support operations in conjunction with maintenance and/or repairs on platform components, [Examples: mooring buoy, boat dock, structural supports, diving operations and cathodic protection equipment].
5. Support operations in conjunction with surveys of platform and subsea components including pipelines and power cables, [Examples: side scan sonar, ROV inspection, diving inspections and marine biological inspections].
6. Support operations in conjunction with drilling and workover operations, [Examples: perforation watch and marine safety zone surveillance]
7. Support/participate in oil spill drills and actual incidents. [Examples: deploying boom and recovery equipment, taking samples and personnel exposure measurements and other spill response activities].
8. Support safety, health, and emergency drills and actual incidents. [Examples: third party requests for assistance, medivac and platform evacuation as well as other safety and health

activities, fire and explosion, well control blowout, storm, vessel collision, bomb threat and terrorist and man overboard].

9. Provide standby boat services when required due to limitations of platform survival craft capabilities and/or platform personnel count.
10. Supply marine support services to accommodate activities by local, state and federal agencies and special industry / public interest groups when requested.
11. Conduct engine source compliance tests as required by the permits or other rules and regulations.
12. Perform vessel and boat maintenance as required.
13. Travel to safe harbor from platforms, dock or pier during extreme weather or other emergency situations.

2.1.6.2 *Supply Boats*: Supply/Work boats (hereinafter referred to as "supply boats") are used for a variety of purposes in support of the platform. Supply boats make an average of 2 round trips per day between the platform and Port Hueneme or other ports during normal operations (i.e., no drilling or well repair). Supply boats may be use more frequently during periods of drilling or well repair: Supply boats may not use the Ellwood pier for transfer of personnel in place of a crew boat. Supply boats are used for the following activities:

1. Load, transport (receipt, movement and delivery) and unload personnel, equipment and supplies to and from the platforms and Port Heuneme or other ports during routine operations and to accommodate special logistic situations, [Examples: transport of drilling/workover fluid, casing, specialty chemicals, cement or other supplies to a dock or pier to accommodate special needs of a vendor].
2. Support supply/work boat while it is working at the platforms, [Examples: hold supply boat in position and transfer equipment or supplies].
3. Operate boat engines to maintain boat positioning while working at the platforms, docks, or piers or in open waters.
4. Support operations in conjunction with maintenance and/or repairs on platform components, [Examples: mooring buoy, boat dock, structural supports, diving operations and cathodic protection equipment]
5. Support operations in conjunction with surveys of platform and subsea components including pipelines and power cables, [Examples: side scan sonar, ROV inspection, diving inspections and marine biological inspections].
6. Support operations in conjunction with drilling and workover operations, [Examples: perforation watch and marine safety zone surveillance].
7. Support/participate in oil spill drills and actual incidents. [Examples: deploying boom and recovery equipment, taking samples and personnel exposure measurements and other spill response activities].
8. Support safety, health, emergency drills and actual incidents, [Examples: third party requests for assistance, medivac and platform evacuation, safety and health activities, third party requests, fire and explosion, well control blowout, storm, vessel collision, bomb threat and terrorist and man overboard].
9. Provide standby boat services when required due to limitations of platform survival craft capabilities and/or platform personnel count.
10. Supply marine support services to accommodate activities by local, state and federal agencies and special industry/public interest groups when requested.
11. Conduct engine source compliance tests as required by the permits or other rules and regulations.
12. Perform vessel and boat maintenance as required.

13. Travel to safe harbor from platforms, dock or pier during extreme weather or other emergency situations.

2.2. Detailed Process Equipment Listing

Due to the complexity of the LFC facility, this permit does not specifically list all emission units. Instead, the equipment permitted to operate under this permit are incorporated by reference to the following documents:

- ExxonMobil Las Flores Canyon Mechanical (Major) Equipment List; Revision 2; 10/23/90.
- ExxonMobil Las Flores Canyon Process Flow Diagrams; dated prior to December 1, 1998.
- ExxonMobil Las Flores Canyon Piping & Instrument Diagrams; dated prior to December 1, 1998.

Only those equipment items that have a potential to emit air contaminants, as determined by the APCD, are subject to this operating permit. These documents are maintained as part of the APCD's administrative file.

Refer to the tables in Attachments 10.2, 10.3, and 10.5 for a listing of permitted and exempt emission units.

Table 2.1 Stack Gas Descriptions

The following lists the expected low/high/norm ranges of significant operating parameters based on available equipment manufacturers' data. Each line item is independent of the others (e.g., low NO_x may not occur under the same conditions as low CO). The pressure in all stacks at the flow measurement point is essentially atmospheric and no pressure correction is applied. The data herein are not enforceable. See Section 9 of this permit for what data is enforceable.

Parameter	Low	High	Norm
Cogen Plant Main HRSG Stack			
Moisture Vol % Wet	5.79	14.35	11.91
Flow (Dry) MSCFH	10.7	13.7	12.8
Temp Deg. F.	304	491	326
Velocity Ft./Sec	41	68	53
Cogen Plant Bypass Stack			
O_2 vol % dry	14.95	19.10	19.06
Moisture Vol % Wet	2.58	10.75	2.94
Flow (Dry) MSCFH	10.9	13.4	11.3
Temp Deg. F.	528	1035	528
Velocity F./Sec.	51	104	53
SGTP Incinerator Stack			
O2 Vol % Dry	2	2	2
Moisture vol % Wet	12	16	12
Flow (Dry) KSCFH	140	274	274
Temp Deg. F.	1750	1750	1750
Velocity Ft./Sec.	33	63	63
OTP Thermal Oxidizer			
HP Header Flow KSCFH	0.0	555	0
LP Header Flow KSCFH	1.6	183	0
AG Header Flow KSCFH	0.5	109	0
NH3 Header Flow KSCFH	0.04	7.0	0
Stack Temp Deg. F.	Ambient	1800	Ambient
Stack Velocity Ft./Sec.	0	110	0
Stack Flow Klb/h	0	6611	0

Figure 2.1 Exxon – SYU Offshore/Onshore Facility Overview

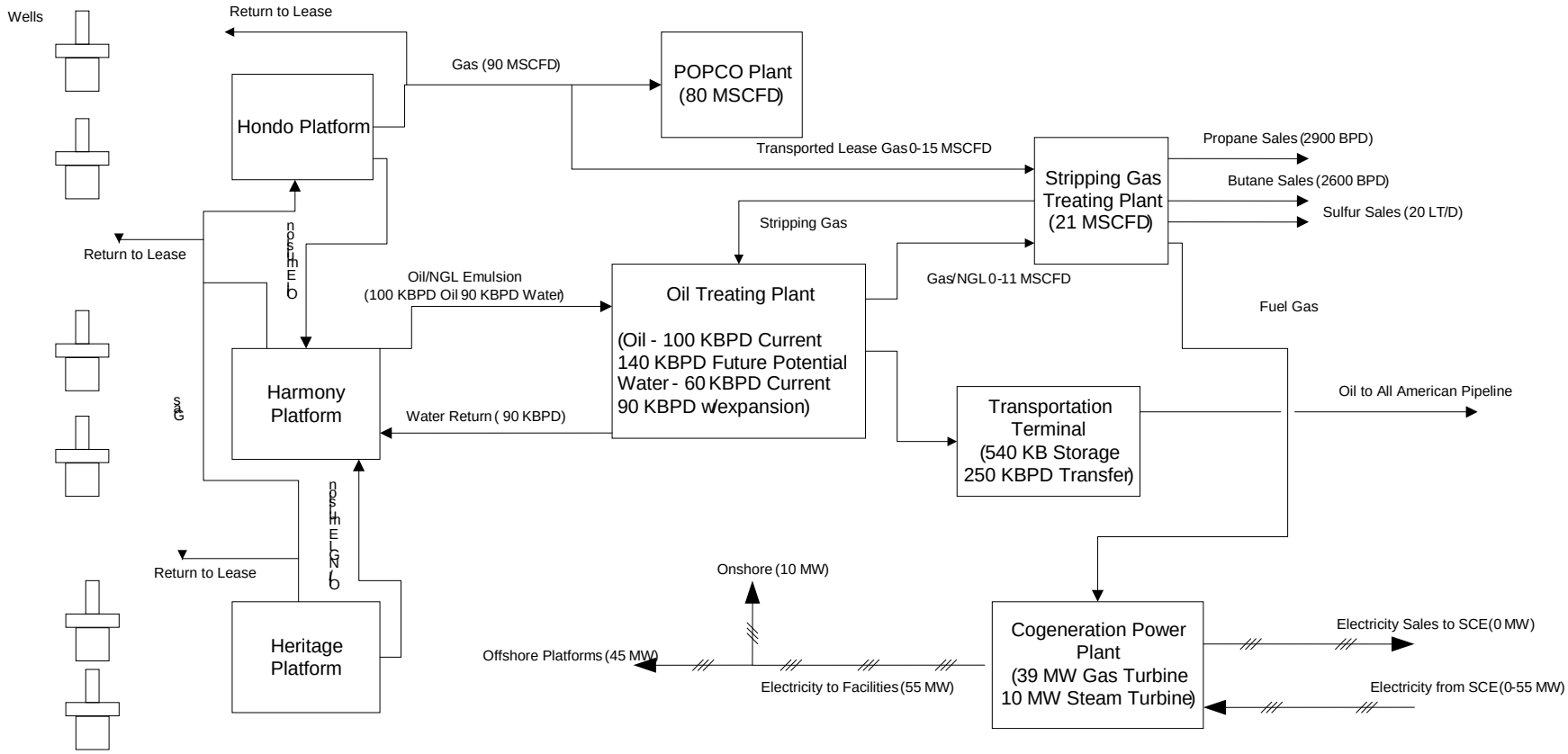

Note: In these figures MSCF = million standard cubic feet

Figure 2.2 Oil Treating Plant and Transportation Terminal Simplified Block Flow Diagram

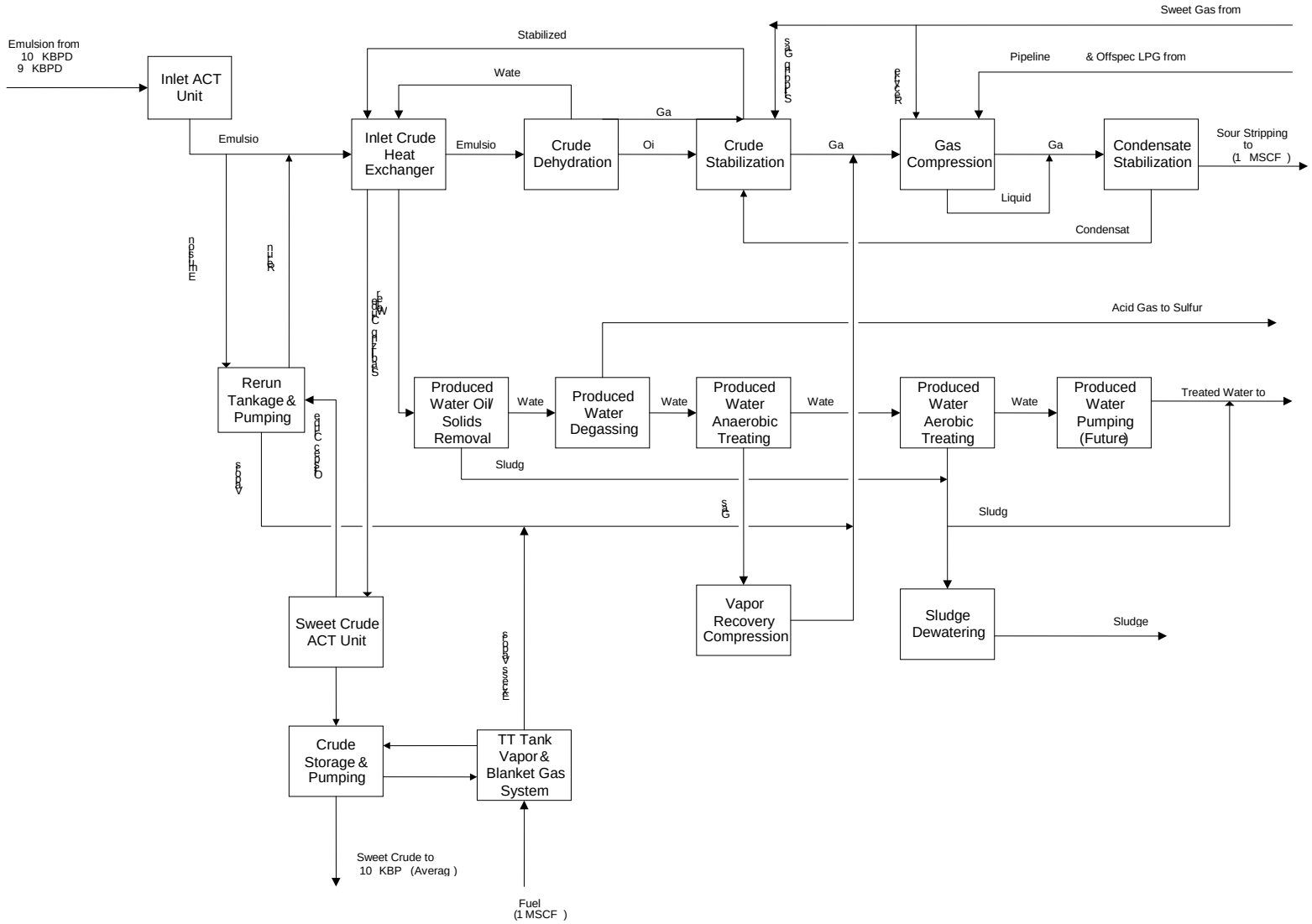

Note: In these figures MSCF = million standard cubic feet

Figure 2.3 Stripping Gas Treating Plant Simplified Block Diagram

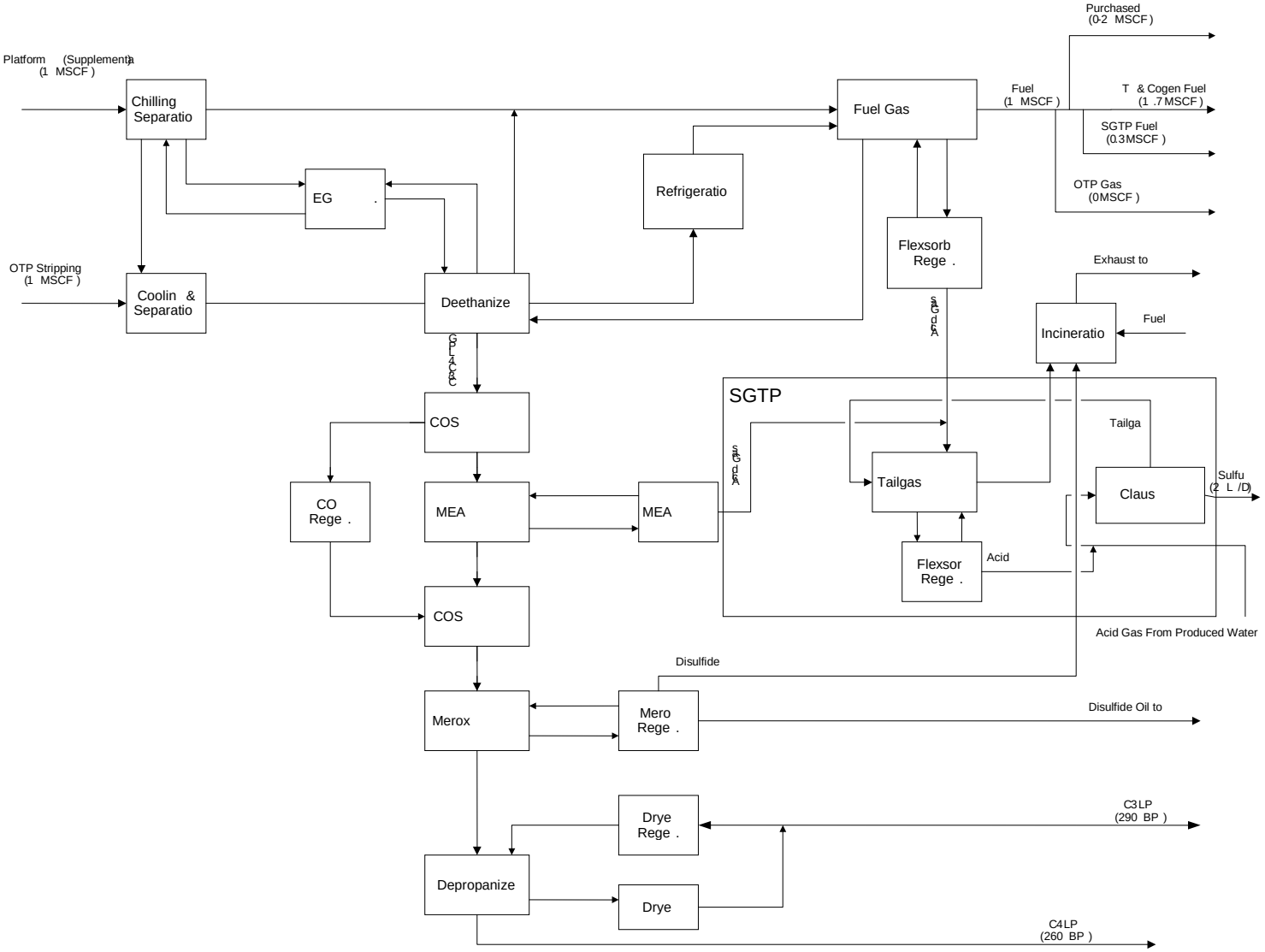

Note: In these figures MSCF = million standard cubic feet

Figure 2.4 Cogeneration Power Plant Simplified Block Diagram

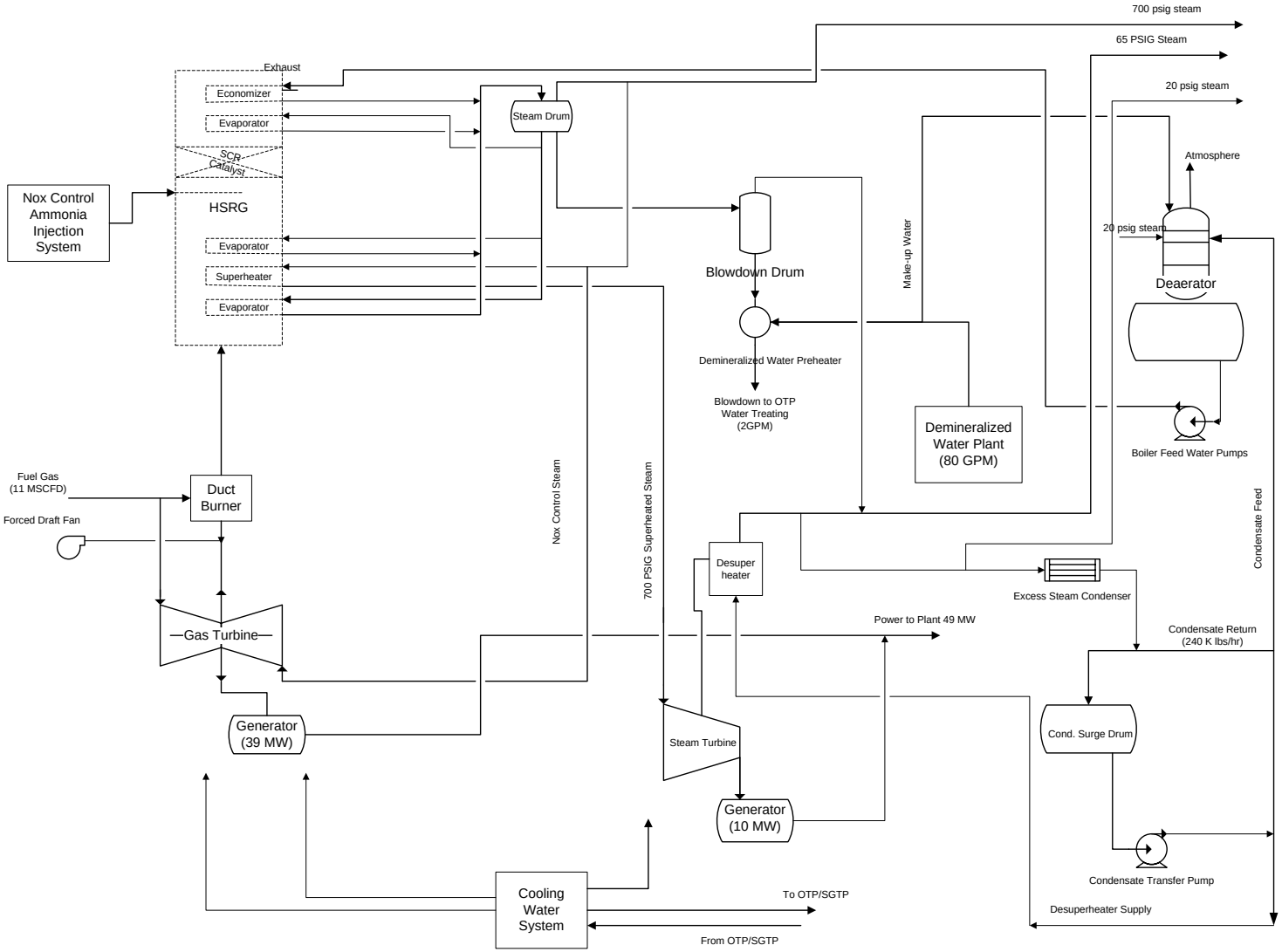

Note: In these figures MSCF = million standard cubic feet

3.0 Regulatory Review

3.1. Rule Exemptions Claimed

⇒ APCD Rule 202 (*Exemptions to Rule 201*): ExxonMobil qualifies for a number of exemptions under this rule. An exemption from permit, however, does not grant relief from any applicable prohibitory rule unless specifically exempted by that prohibitory rule. The following exemptions are approved by the APCD:

- As of April 2009, the *de minimis* increases (per Section D.6) are:

	ROC (lb/day)
POPCO	1.877
LFC	0.000
Platform Harmony	2.660
Platform Heritage	10.417
Platform Hondo	0.000
Entire Source:	**14.953**

- Section D.8 for routine surface coating maintenance activities.
- Section H.3 for all portable abrasive blasting equipment (excluding IC engines that are subject to Section F of Rule 202).
- Section V.2 for the storage of diesel fuel.
- Section V.3 for lube oil storage tanks.

⇒ APCD Rule 311 (*Sulfur Content of Fuels*): Based on the exemption in Section A.1 for the manufacturing of sulfur or sulfur compounds, the incinerator serving the sulfur recovery unit is exempt from the standards in this rule. Based on the exemption in Section A.2 for incinerating waste gases with a gross heating value less than 300 Btu/scf, the thermal oxidizer is exempt from the standards in this rule when it is burning acid gas.

⇒ APCD Rule 321 (*Solvent Cleaning Operations*): The Safety-Kleen cold solvent degreaser has a capacity of 1 gallon or less or an evaporative surface area of less than 1 square foot, therefore it is exempt from all provisions of this rule per Section B.2., except for Section G.2.

⇒ APCD Rule 325 (*Crude Oil Production and Separation*): The following emission units receive liquid containing less than 5 milligrams ROC per liter, or have ROC emissions less than 0.25 tpy, therefore they are exempt from Sections D.1 and D.2 of the rule per Section B.3:

- SGTP Area Drain Separator (ABH-4406)
- SGTP Open Drain Sump (ABH-4407)
- OTP Open Drain Sump (ABH-1413)

- OTP Area Drain Oil/Water Separator (ABH-1415)
- OTP Equalization Tank (ABJ-1424)
- OTP Centrate Tank (ABJ-1443)
- TT Area Drain Oil/Water Separator (ABH-3402)

The following five emission units are pressure vessels or out of service, therefore they are exempt from all requirements of the rule per Section B.5:

- OTP Clear Backwash Makeup Tank (MBJ-1104)
- OTP Backwash Collection Tank (ABJ-1421)
- OTP AF Gas Separator (MBF-1108)
- OTP Anaerobic Filter (MBM-1109)
- OTP VF Tower Feed Drum (MBD-1138)
- OTP Closed Drain Sump (MBH-1152)
- TT Closed Drain Sump (MBH-3107)
- SGTP Closed Drain Sump (MBH-4166)

⇒ APCD Rule 326 (*Storage of Reactive Organic Compound Liquids*): The following three emission units store ROC liquids with a vapor pressure less than 0.5 psia, therefore they are exempt from all provisions of the rule per Section B.1.b:

- Diesel Storage Tank (ABJ-1416)
- SOV Compressor Lube Tank (ABJ-1417)
- VR Compressor Lube Tank (ABJ-1419)

The following crude oil storage tanks are subject to Rule 325, therefore they are exempt from all provisions of the rule per Section B.1.c:

- Oil Storage Tank A (ABJ-3401A)
- Oil Storage Tank B (ABJ-3401B)
- Rerun Tank A (ABJ-1401A)
- Rerun Tank B (ABJ-1401B)

⇒ APCD Rule 331 (*Fugitive Emissions Inspection and Maintenance*): The following components are exempt from all provisions of the rule:

- Components buried below ground
- One half inch and smaller stainless steel tube fittings that have been determined to be leak free by the Control Officer

The following components are exempt from Sections F.1, F.2, F.3 and F.7:

- Components totally contained or enclosed such that there are no ROC emissions into the atmosphere
- Components, except components within gas processing plants, exclusively handling liquid and gaseous process fluids with an ROC concentration of 10 percent or less by weight, as determined according to test methods specified in Section H.2
- Components exclusively in heavy liquid service

The following components are exempt from Sections F.1, F.2 and F.7:

- Components that are unsafe-to-monitor, as documented and established in a safety manual or policy, and with prior written approval of the Control Officer

⇒ APCD Rule 333 (*Control of Emissions from Reciprocating Internal Combustion Engines*): The floodwater pump engine and the firewater pump engines are compression ignition emergency standby engines, therefore they are exempt from Rule 333 per Section B.1.d.

⇒ APCD Rule 344 (*Petroleum Sumps, Pits and Well Cellars*): The following emission units are either spill containments or post tertiary sumps, or are post primary sumps with surface areas less than 1000 square feet and are exempt from all provisions of the rule:

- ABH-1413, OTP Open Drain Sump (B.1)
- ABH-1442, OTP Backwash Sump (B.1)
- ABH-4407, SGTP Open Drain Sump (B.1)
- MBH-3107, TT Closed Drain Sump (B.1)
- MBH-4164, SGTP Ethylene Glycol Drain Sump (B.1)
- MBH-4166, SGTP Closed Drain Sump (B.1)
- MBH-4168, SGTP Fuel Gas Amine Drain Sump (B.1)
- MBH-4169, SGTP LPG Amine Drain Sump (B.1)
- MBH-4170, SGTP TG Amine Drain Sump (B.1)
- MDB-4171, SGTP Waste Caustic Drain Sump (B.1)
- ABJ-3401A, TT Oil Storage Tank Containment Device (B.1)
- ABJ-3401B, TT Oil Storage Tank Containment Device (B.1)
- ZBH-4501, TT Emergency Curtailment Basin (B.1)
- ABJ-1425, OTP Aeration Tank A (B.2)
- ABJ-1426, OTP Aeration Tank B (B.2)
- ABJ-1428, OTP Clarifier A (B.2)
- ABJ-1429, OTP Clarifier B (B.2)
- ABJ-1431, OTP Outfall Batch Tank (B.2)
- ABJ-1450, OTP Skim Tank (B.2)
- ABH-1414, OTP Area Drain Sump (B.1, B.4)
- ABH-3403, TT Area Drain Sump (B.1, B.4)
- ABH-4405, SGTP Area Drain Sump (B.1, B.4)
- ABH-1415, OTP Area Drain Separator (B.1, B.4)
- ABH-3402, TT Area Drain Separator (B.1, B.4)
- ABH-4406, SGTP Area Drain Separator (B.1, B.4)

⇒ APCD Rule 346 (*Loading of Organic Liquids*): Per Section B.4, the transfer of natural gas liquids, propane, butane or liquefied petroleum gases is exempt from the provisions of the rule.

⇒ APCD Rule 359 (*Flares and Thermal Oxidizers*): The incinerator serving the Tail Gas Cleanup Unit is used to burn gas from the manufacturing of sulfur, therefore the TGCU incinerator is exempt per Section B.1. The acid gas sent to the thermal oxidizer has a net heating value less than 300 Btu/scf and the fuel used to combust the acid gas has less than 15 grains/100 scf, therefore the acid gas sent to the thermal oxidizer is not subject to the sulfur content limits of Section D.1, the flare minimization plan requirements of Section

D.3, or the emission and operational limits of Section D.5 per Section B.2. The thermal oxidizer is subject to rule 359 when it is combusting hydrocarbon gas streams.

3.2. Compliance with Applicable Federal Rules and Regulations

3.2.1 40 CFR Parts 51/52{*New Source Review (Nonattainment Area Review and Prevention of Significant Deterioration*)}: The LFC facility was permitted in November 1987 under APCD Rule 205.C. That rule was superseded by APCD Regulation VIII (*New Source Review*) in April of 1997. Compliance with PTO 5651 requirements and Regulation VIII ensures that the LFC facility will comply with the federal NSR requirements.

3.2.2 40 CFR Part 60 {*New Source Performance Standards*}: The following NSPS apply at the LFC facility:

- Subpart A - General Provisions
- Subpart Db - Standards of Performance for Industrial-Commercial-Institutional Steam Generating Units
- Subpart Kb - Standards of Performance for Volatile Organic Liquid Storage Vessels. The ATC/PTO 5651-01 modification of the TVP limit of 11 psia for the Oil Storage tanks to an average value triggered the requirements of 40 CFR §60.112b(b) (since this would allow short-term exceedances). Compliance is achieved by compliance with the requirements of 40 CFR §60.112b(a)(3) through the use of a closed vent system and control device (Thermal Oxidizer) that meets the requirements of 40 CFR §60.18.
- Subpart GG - Standards of Performance for Stationary Gas Turbines
- Subpart KKK - Standards of Performance for Equipment Leaks of VOC From Onshore Natural Gas Processing Plants
- Subpart LLL - Standards of Performance for Onshore Natural Gas Processing; SO_2 Emissions

Attachment 10.5 provides the NSPS compliance report.

3.2.3 40 CFR Part 61 {*NESHAP*}: This facility is not currently subject to the provisions of this Subpart.

3.2.4 40 CFR Part 63 Maximum Achievable Control Technology (MACT) Standards:

3.2.4.1 *40 CFR Part 63 Maximum Achievable Control Technology (MACT) Standards Subpart HH* - On June 17, 1999, EPA promulgated Subpart HH, a National Emission Standards for Hazardous Air Pollutants (NESHAPS) for Oil and Natural Gas Production and Natural Gas Transmission and Storage. ExxonMobil submitted an *Initial Notification of Applicability* by June 17, 1999. Based on that submittal, and several subsequent letters from ExxonMobil (2/15/02 and 5/14/02), the APCD determined that only the NGL storage vessels are subject to MACT standards (40 CFR 63.776 (b) (2)). The APCD determined that the pressure storage vessels located at LFC are not equipped with a closed-vent system per the definition in MACT. Therefore, section 63.773 Inspection and Monitoring requirements do not apply to these units. General MACT requirements applicable to this facility are contained in Condition 9.B.16. The APCD concurs with ExxonMobil's claim (Ref. APCD's 8/13/2002 letter to ExxonMobil and ExxonMobil's 8/27/2002 letter to APCD) that the following units are not subject to MACT standards: The Glycol Dehydration Reboiler unit does not qualify as "process vents" as defined in subpart HH. The

Ancillary Equipment and Compressors are exempt since ExxonMobil implements a subpart KKK plan (40 CFR 60 subpart KKK), and had certified compliance with this plan.

3.2.4.2 *40 CFR Part 63 Maximum Achievable Control Technology (MACT) Standards Subpart EEEE* - On August 25, 2003, EPA promulgated a National Emission Standards for Hazardous Air Pollutants (NESHAPS) for Organic Liquid Distribution (Non-Gasoline) Activities (Subpart EEEE). This MACT does not apply to oil and natural gas facilities as defined in 40 CFR 63.2334(c)(1).

3.2.4.3 *40 CFR Part 63 Maximum Achievable Control Technology (MACT) Standards Subpart YYYY* – On March 5, 2004, EPA promulgated a National Emission Standards for Hazardous Air Pollutants (NESHAPS) for stationary combustion turbines. Per 40 CFR 63.6090(b)(4) existing turbines do not have to meet the requirements of the subpart and no initial notification is necessary. Therefore the turbine does not need to meet the requirements of this subpart. The turbine will have to meet the requirements of the subpart if it is reconstructed or replaced.

3.2.4.4 *40 CFR Part 63 Maximum Achievable Control Technology (MACT) Standards Subpart DDDDD* - On February 26, 2004, EPA promulgated a National Emission Standards for Hazardous Air Pollutants (NESHAPS) for Industrial, Commercial, and Institutional Boilers and Process Heaters (Subpart DDDDD). The CPP is classified as "large gaseous fuel unit" per this MACT, but is only required to complete the initial notification for "large gaseous fuel units", which was submitted on March 10, 2005.

3.2.5 40 CFR Part 64 {*Compliance Assurance Monitoring*}: This rule became effective on April 22, 1998. The following units at LFC are exempt from CAM requirements because they are equipped with continuous emissions monitors (CEMS):

APCD DeviceNo	Device Name	CAM Exemption Claimed
1088	Thermal Oxidizer	64.2.b.1.vi
7862	CPP: Cogen: Norm. Ops Tandem Mode (GTG & GTG/HRSG)	64.2.b.1.vi
7865	CPP: Cogen: HRSG Only Mode	64.2.b.1.vi
7866	CPP: Cogen: Planned Startup/Shutdown	64.2.b.1.vi
7867	SGTP: TGCU/Merox Vent Incinerator	64.2.b.1.vi
7868	SGTP: TGCU Incinerator (w/out Merox Vent)	64.2.b.1.vi

3.2.6 40 CFR Part 68 {*Chemical Accident Prevention Provisions*}. ExxonMobil is required to comply with the requirements of this regulation. Their initial Section 112r Risk Management Plan ("RMP") was submitted to the EPA in June of 1999. The annual compliance certification must include a statement regarding compliance with this part, including the registration and submission of the RMP.

3.2.7 40 CFR Part 70 {*Operating Permits*}: This Subpart is applicable to LFC. Table 3.1 lists the federally-enforceable APCD promulgated rules that are "generic" and apply to the facility. Table 3.2 lists the federally-enforceable APCD promulgated rules that are "unit-specific". These tables are based on data available from the APCD's administrative files and from ExxonMobil's Part 70 Operating Permit application. In its Part 70 permit application (Forms I and J), ExxonMobil certified compliance with all existing APCD rules and permit conditions. This certification is also required of ExxonMobil semi-annually. Issuance of this permit and compliance with all its

terms and conditions will ensure that ExxonMobil complies with the provisions of all applicable Subparts.

3.3. Compliance with Applicable State Rules and Regulations

3.3.1 Division 26. Air Resources {California Health & Safety Code}: The administrative provisions of the Health & Safety Code apply to this facility.

3.3.2 California Administrative Code Title 17: These sections specify the standards by which abrasive blasting activities are governed throughout the State. All abrasive blasting activities at the LFC facility are required to conform to these standards. Compliance is typically assessed through onsite inspections. However, CAC Title 17 does not preempt enforcement of any SIP-approved rule that may be applicable to abrasive blasting activities.

3.3.3 California Administrative Code Title 17 {Sections 93115}: These sections specify emission, operational, monitoring, and recordkeeping requirements for stationary diesel-fired compression ignition engines rated over 50 bhp. The firewater pumps and floodwater pump engines are required to conform to these standards. Compliance will be assessed through onsite inspections. These standards are not federally enforceable onshore.

3.4. Compliance with Applicable Local Rules and Regulations

3.4.1 Applicability Tables: In addition to Tables 3.1 and 3.2, Table 3.3 lists the non-federally enforceable APCD promulgated rules that apply to the LFC facility.

3.4.2 Rules Requiring Further Discussion: This section provides a more detailed discussion regarding the applicability and compliance of certain rules.

The following is a rule-by-rule evaluation of compliance for LFC:

Rule 301 - Circumvention: This rule prohibits the concealment of any activity that would otherwise constitute a violation of Division 26 (Air Resources) of the California H&SC and the SBCAPCD rules and regulations. To the best of the APCD's knowledge, ExxonMobil is operating in compliance with this rule.

Rule 302 - Visible Emissions: This rule prohibits the discharge from any single source any air contaminants for a period or periods aggregating more than three minutes in any one hour which is as dark or darker in shade than a reading of 1 on the Ringelmann Chart or of such opacity to obscure an observer's view to a degree equal to or greater than a reading of 1 on the Ringelmann Chart. Sources subject to this rule include: the thermal oxidizer, the TGCU Incinerator and all diesel-fired piston internal combustion engines, regardless of exemption status. Improperly maintained diesel engines have the potential to violate this rule. Compliance will be assured through Visible Emissions Monitoring per condition 9.B.2 by ExxonMobil staff and requiring all engines to be maintained according to manufacturer maintenance schedules per the APCD-approved *IC Engine Particulate Matter Operation and Maintenance Plan*.

Rule 303 - Nuisance: This rule prohibits ExxonMobil from causing a public nuisance due to the discharge of air contaminants. Nuisance complaints were received in January 2007 due to odors from the wastewater aeration basins. NOV 8734 was issued in response to these odor complaints, ExxonMobil took steps to prevent future releases from the wastewater aeration basins and

subsequent inspections documented no odors at or beyond the property boundary. All nuisance complaints are investigated by the APCD and follow the guidelines outlined in Policy & Procedure I.G.2 (*Compliance Investigations*). This rule is included in the SIP.

Rule 305 - Particulate Matter, Southern Zone: The LFC facility is considered a Southern Zone source. This rule prohibits the discharge into the atmosphere from any source particulate matter in excess of specified concentrations measured in gr/scf. The maximum allowable concentrations are determined as a function of volumetric discharge, measured in scfm, and are listed in Table 305(a) of the rule. Sources subject to this rule include: the thermal oxidizer, the TGCU Incinerator and all diesel-fired IC engines. Improperly maintained diesel engines have the potential to violate this rule. Compliance will be assured by requiring all engines to be maintained according to manufacturer maintenance schedules per the APCD-approved *IC Engine Particulate Matter Operation and Maintenance Plan*. Rule 359 addresses the need for the thermal oxidizer to operate in a smokeless fashion.

Rule 309 - Specific Contaminants: Under Section A no source may discharge sulfur compounds in excess of 0.2 percent as SO_2 (by volume) or combustion contaminants in excess of 0.1 gr/scf (at 12% CO_2). Under Section B no source may discharge sulfur compounds from a sulfur recovery unit in excess of 500 ppmv (0.05 percent by volume) as SO_2 or 10 ppmv H_2S.Sulfur emissions due to planned flaring events will comply with the SO_2 limit. Flaring of acid gas may not comply with the SO_2 limit, however, and ExxonMobil will need to obtain variance relief in such cases. All diesel powered piston IC engines have the potential to exceed the combustion contaminant limit if not properly maintained (see discussion on Rule 305 above for compliance).

Rule 310 - Odorous Organic Compounds: This rule prohibits the discharge of H_2S and organic sulfides that result in a ground level impact beyond the property boundary in excess of either 0.06 ppmv averaged over 3 minutes and 0.03 ppmv averaged over 1 hour. The consolidated odor monitoring station (*LFC Odor*) is located at the fence line. The APCD has not recorded any odor complaints from this facility.

Rule 311 - Sulfur Content of Fuels: This rule limits the sulfur content of fuels combusted at the LFC facilities to 0.5 percent (by weight) for liquids fuels and 15 gr/100 scf (calculated as H_2S) {or 239 ppmvd} for gaseous fuels. ExxonMobil uses CARB diesel fuel, which contains only 0.0015% sulfur. All fuel gas is required to have a sulfur content not exceeding 24 ppmv (as S). Compliance with this fuel gas requirement is continuously monitored by the fuel gas H_2S Analyzer (A-40055A) and quarterly sampling. The waste gas incinerator and the thermal oxidizer, when it is used to burn acid gas, are not subject to this rule (see discussion under Rule 311).

Rule 317 - Organic Solvents: This rule sets specific prohibitions against the usage of both photo-chemically and non-photo-chemically reactive organic solvents (40 lb/day and 3,000 lb/day respectively). Solvents may be used at LFC facilities during normal operations for degreasing by wipe cleaning and for use in paints and coatings in maintenance operations. There is the potential to exceed the limits under Section B.2 during significant surface coating activities. ExxonMobil is required to maintain records to ensure compliance with this rule.

Rule 318 - Vacuum Producing Devices or Systems – Southern Zone: This rule prohibits the discharge of more than 3 pounds per hour of organic materials from any vacuum producing device or system, unless the organic material emissions have been reduced by at least 90 percent. ExxonMobil states that there are no emission units subject to this rule.

Rule 321 - Control of Degreasing Operations: This rule sets equipment and operational standards for degreasers using organic solvents. The Safety-Kleen cold solvent degreaser is exempt from all rule provisions, except Section G.2.

Rule 322 - Metal Surface Coating Thinner and Reducer: This rule prohibits the use of photo-chemically reactive solvents as thinners or reducers in metal surface coatings. ExxonMobil is required to maintain records during maintenance operations to ensure compliance with this rule.

Rule 323 - Architectural Coatings: This rule sets standards for many types of architectural coatings. The primary coating standard that will apply to the platform is for Industrial Maintenance Coatings which has a limit of 340 gram ROC per liter of coating, as applied. ExxonMobil is required to comply with the Administrative requirements under Section F for each container at LFC.

Rule 324 - Disposal and Evaporation of Solvents: This rule prohibits any source from disposing more than one and a half gallons of any photo-chemically reactive solvent per day by means that will allow the evaporation of the solvent into the atmosphere. ExxonMobil is required to maintain records to ensure compliance with this rule.

Rule 325 - Crude Oil Production and Separation: This rule applies to equipment used in the production, gathering, storage, processing and separation of crude oil and gas prior to custody transfer. The primary requirements of this rule are contained in Sections D and E. Section D requires the use of vapor recovery systems on all tanks and vessels, including waste water tanks, oil/water separators and sumps. Section E requires that all produced gas be controlled at all times, except for wells undergoing routine maintenance. All production and test vessels and tanks are connected to gas gathering systems and all relief valves are connected to the flare relief system, except for the relief devices on the Oil Storage and Rerun Tanks. ExxonMobil has installed vapor recovery on all equipment subject to this rule. Compliance with this requirement will be verified by APCD inspections. Compliance with Section E is met by directing all produced gas to a sales compressor, injection well or to the flare relief system. In addition, the distance pieces on the SOV and VR compressors are subject to Section E. Compliance is met by a combination of vapor recovery and carbon canister on the distance piece/seal system.

Rule 326 - Storage of Reactive Organic Liquids: This rule applies to equipment used to store reactive organic compound liquids with a vapor pressure greater than 0.5 psia. The Demulsifier Tank has a 300 bbl capacity and stores demulsifier agents with a vapor pressure of 0.8 psia; Section D.1 applies. The Demulsifier Tank is also subject to BACT. The tank complies with BACT requirements and Rule 326 requirements with the use of an APCD-approved carbon canister system.

Rule 327 - Organic Liquid Cargo Tank Vessel Loading: There are no organic liquid cargo tank vessel loading operations associated with the SYU Project.

Rule 328 - Continuous Emissions Monitoring: This rule details the applicability and standards for the use of continuous emission monitoring systems ("CEMS"). CEMS are required for the CPP and SGTP as outlined in Section 4.12 and the tables in Attachment 10.1. A number of process variables are also continuously monitored to assess compliance with the applicable requirements. ExxonMobil operates the CEMS and process monitors consistent with the APCD approved CEMS Plan.

Rule 330 - Surface Coating of Metal Parts and Products: This rule sets standards for many types of coatings applied to metal parts and products. In addition to the ROC standards, this rule sets operating standards for application of the coatings, labeling and recordkeeping. This rule only applies to metal parts and products which are not currently installed as appurtenances to the existing stationary structures. It is not anticipated that ExxonMobil will trigger the requirements of this rule. Compliance shall be based on site inspections.

Rule 331 - Fugitive Emissions Inspection and Maintenance: This rule applies to components in liquid and gaseous hydrocarbon service at oil and gas processing plants. ExxonMobil complies with this rule through implementation of the APCD approved I&M Plan (*Fugitive Emissions Inspection and Maintenance Program for Las Flores Canyon Process Facilities*). Ongoing compliance with the provisions of this rule is assessed via facility inspection by APCD personnel using an organic vapor analyzer and through analysis of operator records.

Rule 333 - Control of Emissions from Reciprocating Internal Combustion Engines: This rule applies to all engines with a rated brake horsepower of 50 or greater that are fueled by liquid or gaseous fuels. The IC engines at the facility include two emergency firewater pump engines and one emergency floodwater pump engine. These engines are subject to APCD Rule 333, but they are compression ignition emergency standby engines and are exempt from the provisions of the rule per Section B.1.c.

Rule 342 - Control of Oxides of Nitrogen from Boilers, Steam Generators and Process Heaters: This rules sets emission standards for external combustion units with a rated heat input greater than 5.0 MMBtu/hr. The duct burners in the HRSG are subject to this rule. The duct burners are also subject to BACT per ATC 5651. Compliance with BACT emission standards also ensures compliance with Rule 342 emission standards. Pursuant to an APCD directive, Section E.3 does not apply to facilities that used anhydrous ammonia to comply with BACT standards prior to the adoption of this rule. Compliance is assessed through the monitoring, recordkeeping and reporting requirements listed in Section 9.C of this permit.

Rule 343 - Petroleum Storage Tank Degassing: This rule applies to the degassing of any above-ground tank, reservoir or other container of more than 40,000 gallons capacity containing any organic liquid with a vapor pressure greater than 2.6 psia, or between 20,000 gallons and 40,000 gallons capacity containing any organic liquid with a vapor pressure greater than 3.9 psia. This rule applies to the Oil Storage Tanks and the Rerun Tanks. ExxonMobil will comply with this rule through the implementation of the APCD approved *Petroleum Storage Tank Degassing Plan*. Compliance is assessed based on the use of APCD-approved control devices and the recordkeeping and reporting requirements of the rule.

Rule 344 - Petroleum Sumps Pits and Well Cellars: This rule applies to sumps, pits, and well cellars at facilities where petroleum is produced, gathered, separated, processed, or stored. The sumps used at the LFC facility are post-primary sumps with a surface area less than 1000 square feet, and are therefore exempt from the requirements of this rule.

Rule 346 - Loading of Organic Liquids: This rule applies to the transfer of organic liquids into an organic liquid cargo vessel. For this rule only, an organic liquid cargo vessel is defined as a truck, trailer or railroad car. ExxonMobil is exempt from this rule per Section B.4. Further, the vacuum trucks are exempt from the provisions of Sections D, E and F pursuant to Section B.5.

Rule 353 – Adhesives and Sealants: This rule applies to the use of adhesives, adhesive bonding primers, adhesive primers, sealants, sealant primers, or any other primers. Compliance shall be based on site inspections.

Rule 359 - Flares and Thermal Oxidizers: This rule applies to flares for both planned and unplanned flaring events. Compliance with this rule has been documented. ExxonMobil uses a thermal oxidizer to combust all waste gases from the OTP and a waste gas incinerator to combust gas from the Tail Gas Cleanup Unit in the SGTP. The TGCU Incinerator is exempt from the provisions of this Rule pursuant to Section B.1. The acid gas flare header for the thermal oxidizer is exempt pursuant to Section B.2. A detailed review of compliance issues is as follows:
§ D.1 - Sulfur Content in Gaseous Fuels: Part (a) limits the total sulfur content of all planned flaring from South County flares to 15 gr/100 cubic feet (239 ppmv) calculated as H_2S at standard conditions. Under Section D.1.b, ExxonMobil obtained an exemption from the sulfur content standard. Offsets are in place to mitigate the additional SO_x emissions from planned flaring (all SO_x emissions were required to be offset per ATC 5651). Section 7 of this permit describes the source of ERCs.

§ D.2 - Technology Based Standard: Requires all thermal oxidizers to be smokeless and sets pilot flame requirements. ExxonMobil's thermal oxidizer is in compliance with this section as determined through APCD inspection.

§ D.3 - Flare Minimization Plan: This section requires sources to implement flare minimization procedures so as to reduce SO_x emissions. The Planned Flaring volume is 19 million standard cubic feet per month. ExxonMobil has fully implemented their Flare Minimization Plan.

§ D.4 – Emergency Events: This section describes the procedures to be followed in the event of an emergency. ExxonMobil shall follow these procedures if an emergency occurs.

§ D.5 – Emission and Operational Limits: These limits apply to the thermal oxidizer when it is not burning acid gas. The thermal oxidizer is also subject to BACT, compliance with the BACT emissions limits ensures compliance with the Rule 359 emissions limits.

Rule 360 – Emissions of Oxides of Nitrogen from Large Water Heaters and Small Boilers: This rule applies to new water heaters, boilers, steam generators, and process heaters with rated heat input capacities greater than or equal to 75,000 Btu/hr and less than or equal to 2,000,000 Btu/hr. Any new units installed at the facility will be subject to this rule.

Rule 361 – Small Boilers, Steam Generators, and Process Heaters: This rule applies to any boiler, steam generator, or process heater with a rated heat input capacity greater than 2 MMBtu/hr and less than 5 MMBtu/hr. There are no units currently at the facility subject to the rule. Any new units installed at the facility will be subject to this rule.

Rule 505 - Breakdown Conditions: This rule describes the procedures that ExxonMobil must follow when a breakdown condition occurs to any emissions unit associated with any LFC facility. A breakdown condition is defined as an unforeseeable failure or malfunction of (1) any air pollution control equipment or related operating equipment which causes a violation of an emission limitation or restriction prescribed in the APCD Rules and Regulations, or by State law, or (2) any in-stack continuous monitoring equipment, provided such failure or malfunction:

a. Is not the result of neglect or disregard of any air pollution control law or rule or regulation;

b. Is not the result of an intentional or negligent act or omission on the part of the owner or operator;

c. Is not the result of improper maintenance;

d. Does not constitute a nuisance as defined in Section 41700 of the Health and Safety Code;

e. Is not a recurrent breakdown of the same equipment.

Rule 603 - Emergency Episode Plans: Section A of this rule requires the submittal of *Stationary Source Curtailment Plan* for all stationary sources that can be expected to emit more than 100 tons per year of hydrocarbons, nitrogen oxides, carbon monoxide or particulate matter. The APCD approved ExxonMobil's *Emergency Episode Plan* on May 20, 1993.

3.5. Compliance History

This section contains a summary of the compliance history for this facility and was obtained from documentation contained in the APCD's Administrative file.

3.5.1 Variances: ExxonMobil has sought variance relief per Regulation V and received twelve Variances since the last Part 70 renewal permit was issued in 2006:

10-07E: Granted 3/23/2007. District Rule 206 (PC 9.C.8.(b)(iv) and 9.C.17). Allowed stopping ammonia injection during RATA testing of the SO_2 analyzer due to interference with the SO_2 readings.

13-07I: Granted 4/20/2007. District Rule 206 (PC 9.C.8.(b)(iv) and 9.C.17). Extend variance 10-07E to allow time for a new heated sample line to be delivered and installed.

14-07N: Granted 6/6/2007. District Rule 206 (PC 9.C.8.(b)(iv) and 9.C.17). Extend variance 10-07E to allow time for a new heated sample line to be delivered and installed.

34-07E: Granted 10/3/2007. District Rule 206 (PC 9.C.2.(c)(i)). Remove low flow flare meters and return them to the factory for calibration.

37-07E: Granted 11/19/2007. District Rule 206 (PC 9.C.2.(c)(iii)). Exceed the flare sulfur limit until the source of H_2S can be found and the leak stopped.

38-07E: Granted 11/21/2007. District Rule 206 (PC 9.C.1.(a)(i) and 9.C.1.(b)(iv)). Operate the gas turbine without steam injection until GE representatives can troubleshoot and determine what is causing the steam injection system to "trip" and shut down.

39-07N: Granted 12/18/2007. District Rule 206 (PC 9.C.2.(c)(iii)). Extend variance 37-07E. A leaking PSV was found and repaired but the sulfur exceedances continued.

40-07N: Granted 12/18/2007. District Rule 206 (PC 9.C.1.(a)(i) and 9.C.1.(b)(iv)). Extend variance 38-07E to allow time to manufacture and replace a temperature control valve for the steam injection system.

42-07E: Granted 12/19/2007. District Rule 206 (PC 9.C.2.(c)(i)). Operate the flare without the acid gas flow sensor while it is sent to the manufacturer for repair.

01-08N: Variance applied for 1/2/2008, application withdrawn 1/16/2008. This variance was to extend emergency variance 42-07E, but compliance was achieved before the hearing was held.

03-08R: Granted 3/17/2008. District Rule 206 (PC 9.C.1.(a)(i) and 9.C.1.(b)(iv)). Extend variance 40-07N to allow the temperature control valve to be replaced at the next scheduled plant shutdown.

23-08E: Granted 7/4/2008. This variance was granted for violations of numerous operational conditions due to power swings and plant shutdowns caused by the Gap Fire.

32-08E: Granted 9/8/2008. Permit Condition 9.C.15. Allow operation of the SO_2 sensor with the old sample line. The new heated sample line failed and needs to be replaced.

3.5.2 Violations: The last facility inspections occurred during December 2008. The inspector reported that the facility was in compliance with all APCD rules and permit conditions. The following violations have been documented since the last Part 70 permit renewal in 2006:

NOV #8451: Violation of Rule 206 (PC 9.C.8(a)(i)). Issued 3/14/2006. Exceeding the permitted SO_x emissions limit for the waste gas incinerator.

NOV #8453: Violation of Rule 206 (PC 9.C.1(a)(i)). Issued 3/14/2006. Exceeding the permitted NO_x limit for the gas turbine.

NOV #8563: Violation of Rule 328. Issued 6/14/2006. Failing the SO_x RATA test for the waste gas incinerator.

NOV #8564: Violation of Rule 206 (PC 9.C.8(a)(i)). Issued 6/14/2006. Exceeding the permitted SO_x emissions limit for the waste gas incinerator.

NOV #8565: Violation of Rule 206 (PC 9.C.8(a)(i)). Issued 6/14/2006. Exceeding the permitted NO_x emissions limit for the waste gas incinerator.

NOV #8573: Violation of Rule 206 (PC 9.C.8(a)(i)). Issued 8/23/2006. Exceeding the permitted SO_x emissions limit for the waste gas incinerator.

NOV #8574: Violation of Rule 206 (PC 9.C.8(a)(i)). Issued 8/23/2006. Exceeding the permitted SO_x emissions limit for the waste gas incinerator.

NOV #8720: Violation of Rule 325. Issued 9/30/2006. Exceeding the 5 milligram per liter exemption limit of Rule 325 B.3.

NTC #8721: Violation of Rule 206 (9.C.2(c)(iv)). Issued 10/12/2006. Failing to analyze flare gas samples.

NOV #8722: Violation of Rule 206 (PC 9.C.8(a)(i)). Issued 10/3/2006. Exceeding the permitted SO_x emissions limit for the waste gas incinerator.

NOV #8727: Violation of Rule 206 (PC 9.C.8(a)(i)). Issued 12/8/2006. Exceeding the permitted SO_x emissions limit for the waste gas incinerator.

NOV #8728: Violation of Rule 206 (PC 9.C.1(a) and 9.C.1(a)(i)). Issued 12/8/2006. Exceeding the permitted NO_x and CO limits for the gas turbine and the duct burner.

NOV #8731: Violation of Rule 206 (PC 9.C.2(b)(iii)). Issued 12/22/2006. Exceeding the 500 ppmv total sulfur limit for the LP flare header.

NOV #8732: Violation of Rule 206 (PC 9.C.8(a)(i)). Issued 12/22/2006. Exceeding the permitted NO_x limit for the waste gas incinerator.

NOV #8734: Violation of Rule 303. Issued 1/16/2007. Nuisance due to odors from the wastewater aeration basins. Five separate odor complaints were received.

NOV #8735: Violation of Rule 206 (PC 9.C.16). Issued 2/13/2007. Failing to achieve the required data recovery rate for FIT-10212 during the 3rd and 4th quarters of 2006 and the 1st quarter of 2007.

NOV #8742: Violation of Rule 206 (PC 9.C.8(b)(v)). Issued 4/10/2007. Exceeding the heat input limit to the waste gas incinerator.

NOV #8898: Violation of Rule 331. Issued 6/14/2007. Failing to submit an updated Rule 331 Fugitive I&M Plan.

NOV #8899: Violation of Rule 206 (PC 9.C.2(b)(iii)). Issued 7/20/2007. Exceeding the 239 ppmv total sulfur limit for the acid gas flare header.

NOV #8900: Violation of Rule 206 (PC 9.C.2(b)(iii)). Issued 7/20/2007. Exceeding the 500 ppmv total sulfur limit for the LP flare header.

NTC #8904: Violation of Rule 331. Issued 7/20/2007. Failing to submit an updated Rule 331 Fugitive I&M Plan.

NOV #8907: Violation of 206 (PC 9.C.6(b)(iv)). Issued 9/5/2007. Failing to meet the required control efficiency for the Equalization Tank vapor control system.

NOV #9019: Violation of Rule 206 (PC 9.C.8(a)(i)). Issued 12/4/2007. Exceeding the permitted NO_x limit for the waste gas incinerator.

NOV #9020: Violation of Rule 206 (PC 9.C.1(a)(i)). Issued 12/4/2007. Exceeding the permitted NO_x limit for the gas turbine.

NOV #9021: Violation of Rule 206 (PC 9.C.1(a)(i)). Issued 12/4/2007. Exceeding the permitted NO_x limit for the gas turbine.

NOV #9022: Violation of Rule 206 (PC 9.C.2(b)(iii)). Issued 4/18/2008. Exceeding the 500 ppmv total sulfur limit for the LP flare header.

NOV #9023: Violation of Rule 206 (PC 9.C.2(b)(iii)). Issued 12/4/2007. Exceeding the 500 ppmv total sulfur limit for the LP flare header.

NOV #9024: Violation of Rule 206 (PC 9.C.16). Issued 12/4/2007. Failing to monitor the LP flare volume flow rate.

NOV #9027: Violation of Rule 206 (PC 9.C.1(a)(i)). Issued 1/3/2008. Exceeding the permitted NO_x limit for the gas turbine.

NOV #9031: Violation of Rules 206 and 325. Issued 2/8/2008. Uncontrolled venting from Rerun Tanks ABJ-1401A and 1401B due to improper testing of the tanks' fire suppression systems.

NOV #9038: Violation of Rule 206 (PC 9.C.2(b)(iii)). Issued 4/18/2008. Exceeding the 500 ppmv total sulfur limit for the LP flare header.

NOV #9097: Violation of Rule 331. Issued 8/26/2008. Failing to perform routine inspections of fugitive components.

NOV #9098: Violation of Rule 331. Issued 8/26/2008. Failing to re-inspect a fugitive emission component immediately after reassembly.

NOV #9099: Violation of Rule 206 (PC 9.C.8(a)(i)). Issued 8/26/2008. Exceeding the permitted NO_x and tail gas H_2S limits for the waste gas incinerator.

NOV #9100: Violation of Rule 206 (PC 9.C.1(a)(i) and 9.C.8(a)(i)). Issued 8/26/2008. Exceeding the permitted NO_x limit for the waste gas incinerator and the gas turbine duct burners.

NOV #9101: Violation of Rule 206 (PC 9.C.1(a), 9.C.1(a)(i), 9.C.1(b)(ii), 9.C.1(b)(iv), and 9.C.8(a)(i)). Issued 8/26/2008. Exceeding the permitted SO_x limit for the waste gas incinerator and the permitted NO_x limit for the gas turbine.

NOV #9102: Violation of Rule 206 (PC 9.C.1(a)(i) and 9.C.1(b)(iv)). Issued 8/26/2008. Exceeding the permitted NO_x limit for the gas turbine.

3.5.3 Significant Historical Hearing Board Actions/NOVs: There have been no significant historical Hearing Board actions since the last Part 70 permit was issued.

Table 3.1 Generic Federally-Enforceable APCD Rules

Generic Requirements	Affected Emission Units	Basis for Applicability	Adoption Date
RULE 101: Compliance by Existing Installations	All emission units	Emission of pollutants	June 1981
RULE 102: Definitions	All emission units	Emission of pollutants	January 15, 2009
RULE 103: Severability	All emission units	Emission of pollutants	October 23, 1978
RULE 201: Permits Required	All emission units	Emission of pollutants	June 19, 2008
RULE 202: Exemptions to Rule 201	Applicable emission units	Insignificant activities/emissions, per size/rating/function	June 19, 2008
RULE 203: Transfer	All emission units	Change of ownership	April 17, 1997
RULE 204: Applications	All emission units	Addition of new equipment of modification to existing equipment.	April 17, 1997
RULE 205: Standards for Granting Permits	All emission units	Emission of pollutants	April 17, 1997
RULE 206: Conditional Approval of Authority to Construct or Permit to Operate	All emission units	Applicability of relevant Rules	October 15, 1991
RULE 208: Action on Applications – Time Limits	All emission units. Not applicable to Part 70 permit applications.	Addition of new equipment of modification to existing equipment.	April 17, 1997
RULE 212: Emission Statements	All emission units	Administrative	October 20, 1992
RULE 301: Circumvention	All emission units	Any pollutant emission	October 23, 1978
RULE 302: Visible Emissions	All emission units	Particulate matter emissions	June 1981
RULE 303: Nuisance	All emission units	Emissions that can injure, damage or offend.	June 1981
RULE 305: PM Concentration – South Zone	Each PM source	Emission of PM in effluent gas	October 23, 1978
RULE 309: Specific Contaminants	All emission units	Combustion contaminants	October 23, 1978
RULE 311: Sulfur Content of Fuel	All combustion units	Use of fuel containing sulfur	October 23, 1978
RULE 317: Organic Solvents	Emission units using solvents	Solvent used in process operations.	October 23, 1978
RULE 318: Vacuum Producing Devices – Southern Zone	All systems working under vacuum	Operating pressure	October 23, 1978
RULE 321: Solvent Cleaning Operations	Emission units using solvents	Solvent used in process operations.	October 23, 1978
RULE 322: Metal Surface Coating Thinner and Reducer	Emission units using solvents	Solvent used in process operations.	September 18, 1997
RULE 323: Architectural Coatings	Paints used in maintenance and surface coating activities	Application of architectural coatings.	October 23, 1978
RULE 324: Disposal and Evaporation of Solvents	Emission units using solvents	Solvent used in process operations.	July 18, 1996
RULE 353: Adhesives and Sealants	Emission units using adhesives and sealants	Adhesives and sealants use.	August 19, 1999
RULE 505: Breakdown Conditions	All emission units	Breakdowns where permit limits are exceeded or rule requirements are not complied with.	October 23, 1978
RULE 603: Emergency Episode Plans	Stationary sources with PTE greater than 100 tpy	ExxonMobil SYU Project PTE is greater than 100 tpy.	June 15, 1981

Generic Requirements	Affected Emission Units	Basis for Applicability	Adoption Date
REGULATION VIII: New Source Review	All emission units	Addition of new equipment of modification to existing equipment. Applications to generate ERC Certificates.	April 17, 1997
RULE 901: New Source Performance Standards (NSPS)	All emission units	ExxonMobil SYU Project is a major source.	May 16, 1996
RULE 1001: National Emission Standards for Hazardous Air Pollutants (NESHAPS)	All emission units	ExxonMobil SYU Project is a major source.	October 23, 1993
RULE 1301: General Information	All emission units	ExxonMobil SYU Project is a major source.	September 18, 1997
REGULATION XIII (RULES 1302-1305): Part 70 Operating Permits	All emission units	ExxonMobil SYU Project is a major source.	November 9, 1993

Table 3.2 Unit-Specific Federally-Enforceable APCD Rules

Unit-Specific Requirements	Affected Emission Units (APCD DeviceNo)	Basis for Applicability	Adoption Date
RULE 325: Crude Oil Production and Separation	6566, 6567, 6570, 6571 6572, 6573, 6574, 6575,6576, 6577, 6578, 6579, 7885, 6565, 7881, 7882	All pre-custody production and processing emission units	July 19, 2001
RULE 326: Storage of Reactive Organic Compounds	6583	Stores ROCs with vapor pressure greater than 0.5 psia	January 18, 2001
RULE 328: Continuous Emission Monitors	6585, 7865 7868, 106448	Section C and NSPS	October 23, 1978
RULE 331: Fugitive Emissions Inspection & Maintenance	102743, 102744	Components emit fugitive ROCs.	December 10, 1991
RULE 342: Control of Oxides of Nitrogen from Boilers, Steam Generators and Process Heaters	106448	Rated greater than 5 MMBtu/hr	April 17, 1997
RULE 343: Petroleum Storage Tank Degassing	6566, 6567, 6570, 6571	Capacities greater than 40,000 gallons	December 14, 1993
RULE 344: Petroleum Sumps, Pits and Well Cellars	EQ Nos: 6575, 6576, 6579,6580, 6581, 6582	Used in petroleum service	November 10, 1994
RULE 359: Flares and Thermal Oxidizers	1088	Used in petroleum service	June 28, 1994

Table 3.3 Non-Federally Enforceable APCD Rules

Requirement	Affected Emission Units	Basis for Applicability	Adoption Date
RULE 210: Fees	All emission units	Administrative	March 17, 2005
RULE 310: Organic Sulfides	All emission units.	Odorous sulfide emissions	October 23, 1978
RULES 501-504: Variance Rules	All emission units	Administrative	October 23, 1978
RULES 506-519: Variance Rules	All emission units	Administrative	October 23, 1978

4.0 Engineering Analysis

4.1. General

The engineering analyses performed for this permit were limited to the review of:

- Emission factors and calculation methods for each emissions unit
- Emission control equipment (including RACT, BACT, NSPS, NESHAP)
- Emission source testing, sampling, CEMS
- Process monitors needed to ensure compliance.

Unless noted otherwise, default ROC/THC reactivity profiles from the APCD's document titled "*VOC/ROC Emission Factors and Reactivities for Common Source Types*" dated 3/12/2001 (ver 1.2) were used to determine the non-methane, non-ethane fraction of THC.

4.2. Cogeneration Power Plant

4.2.1 General: The primary stationary combustion sources in LFC are located in the Cogeneration Power Plant ("CPP"). The CPP consists of a 39.0 MW (ISO) General Electric Model PG 6531B gas-fired turbine driving a generator and a 9.8 MW Shin Nippon steam turbine. The CPP generators produce electrical power at 13,800 volts to serve the power needs of the LFC facility, the POPCO Gas Plant, as well as ExxonMobil's three offshore platforms (Harmony, Heritage, and Hondo). ExxonMobil also provides additional power to the local grid. The maximum heat input to the gas turbine is 465 MMBtu/hr.

Also part of the CPP is a 345 MMBtu/hr Entec Heat Recovery Steam Generator ("HRSG") that is equipped with John Zink Co. Low-NO_x burners. The HRSG recovers waste heat from the gas turbine as well as its own burners' heat to supply up to 250,000 lbs/hr of steam to satisfy the needs of ExxonMobil's LFC facility.

NO_x emissions are controlled through the use of steam injection in the gas turbine and Selective Catalytic Reduction (ammonia injection) on the combined gas turbine/HRSG exhaust stream. Steam injection is designed to achieve a 50 percent level of control for NO_x. The SCR reactor uses Babcock-Hitachi plate-type catalyst and ammonia injection to achieve a 80 percent control efficiency of NO_x and has a maximum exhaust flow capacity of 1.2 million pounds per hour. The primary fuel source for the CPP is treated natural gas from the Stripping Gas Treating Plant. Secondary fuel is purchased from the gas company. The gas turbine is equipped with a bypass stack that is used when the SCR unit is not operational.

4.2.2 Operating Modes: Operations of the CPP are separated into three modes:

Normal Operations Mode. Normal Operations Mode represents the majority of CPP operations. Normal operations are defined as operations with a gas turbine load greater than 57 percent of the ISO rating of 39.0 MW (i.e., greater than 22 MW). CPP operations outside this mode can only occur during the other two modes described below. During this mode, the gas turbine and the HRSG are limited to a combined maximum heat input of 605.140 MMBtu/hr.

Emissions from the gas turbine bypass stack are based on a leakage rate not exceeding 1 percent of the gas turbine exhaust.

HRSG Only Mode. During this mode, the HRSG operates alone in order to supply steam to the LFC facility. The SCR unit is operational. The gas turbine does not operate in HRSG Only Mode.

Startup/Shutdown Mode. This mode covers both warm and cold startup scenarios and shutdowns. Warm startups occur when the gas turbine goes down, with the HRSG still online, and the SCR unit still "warm". In this case, the gas turbine can be brought back online rather quickly. During a cold startup, more time, up to 2 hours, is needed to bring the SCR unit up to temperature. It takes 1 hour at a turbine power output of up to 20-22 MW to heat the SCR up to a temperature of 570 ^{o}F, and another hour at the same power output in order to produce a sufficient quantity and quality of steam for steam injection for NO_x control. Once the SCR reaches operating temperature, ExxonMobil is required to initiate ammonia injection, and the CPP is ramped up to Normal Operations Mode.

During the Startup Mode, the combined gas turbine/HRSG is limited to a maximum heat input of 308.821 MMBtu/hr and power output of 22 MW. During the Startup Mode, gas turbine exhaust will be emitted directly to atmosphere via the bypass stack at the initial phase of startup and then through the main CPP stack for the remainder of the startup process.

Shutdown is defined as the one hour operating period immediately preceding gas turbine and/or HRSG burner flame out.

Operations in the Planned Startup/Shutdown Mode are limited to 2 hours per day and 18 hours per year.

4.2.3 Emission Factors: Except as discussed below, emission factors for the CPP remain unchanged from ATC 5651 (issued November 1987). The basis for the emission factors is discussed in Section 2.3 of the APCD's Technical Support Document titled Net Emissions Increase/Entire Source Emissions (February 29, 1988). The following changes to the emission factors were approved in ATC 5651-17:

The mass balance emission factor for SO_x (as SO_2) emissions changed from 0.0033 lb/MMBtu to 0.0034 lb/MMBtu. This is due to a change in the default HHV of the fuel gas from 1236 Btu/scf to 1200 Btu/scf.

The categories of Case A, B, C and D were eliminated and replaced with the operating modes discussed above in Section 4.2.2.

Case A (Full Turbine Load) is roughly equivalent to the new *Normal Operations Mode* and covers all operating loads. Normal Operations Mode emission factors are now applicable at all loads above 75 percent of the ISO gas turbine rating. The NO_x, ROC and CO emission factors are all updated to reflect tandem operations of the gas turbine and the HRSG. A weighted average method was used to establish the new emission factors. See Attachment 10.2, Table 10.7, for the emission factor derivation method. The PM and PM_{10} emission factors were proposed by ExxonMobil in order to minimize the PM offset liability.

Case B (Turbine Startup) is roughly equivalent to the new *Startup/Shutdown Mode*. The combined heat input to the gas turbine/HRSG is now 308.821 MMBtu/hr (22 MW). Emission

factors for NO_x changed based on SCDP data to accommodate a peak hourly rate of 90 lb/hr. The ROC emission factor is changed to 0.0953 lb/MMBtu to accommodate the Rule 102 change in the definition of ROC and the PM emission factor is changed to 0.0279 lb/MMBtu to ensure that Rule 309 limits are not exceeded.

Case C (Turbine Down) is roughly equivalent to the new *HRSG Only Mode*. There were no changes in HRSG loads. The CO and ROC emission factors were revised to 0.297 lb/MMBtu and 0.0095 lb/MMBtu respectively, and are applicable at all loads. Further, the CO emissions are limited to 17 lb/hr at all loads.

Case D (Turbine Idling) no longer exists as the CPP is not operated in an idling mode.

4.2.4 Emission Controls: The emission controls for the CPP remain unaffected by this permit modification. A full description of the CPP emission control systems may be found in Appendix C.6 of ExxonMobil's ATC application document Option B – Onshore and Nearshore Facilities/ Volume II – Exhibit B: Air Emissions Analysis. In summary, the emission controls consist of:

- Steam injection at the gas turbine to reduce NO_x emissions by 50 percent at a minimum water-to-fuel ratio of 0.6.
- Low-NO_x burner design for the HRSG burners.
- Selective Catalytic Reduction ("SCR") system to reduce inlet NO_x emissions from the combined gas turbine and HRSG exhaust stream by a minimum of 80 percent using a minimum NH_3/NO_x (inlet) ratio of 1.0. Ammonia slip is designed not to exceed 10 ppmv, however the permit allows up to 20 ppmv.

4.3. Fugitive Hydrocarbon Sources

Emissions of reactive organic compounds from piping components such as valves, flanges and connections have been calculated using emission factors pursuant to APCD P&P 6100.061 (*Determination of Fugitive Hydrocarbon Emissions at Oil and Gas Facilities Through the Use of Facility Component Counts - Modified for Revised ROC Definition*) for components in gas/light liquid service and using ExxonMobil specific emission factors for the components in oil service (as applied for in ATC 5651). The component-leakpath was counted consisted with P&P 6100.061. This leakpath count is not the same as the "component" count required by APCD Rule 331. Both gas/light liquid and oil service components are present at this facility.

The number of component leakpaths was determined by the operator and these data were verified by APCD staff by checking a representative number of P&IDs and by site checks. Emissions are based on a total of 31,982 gas/condensate component-leakpaths and 10,068 oil/emulsion component-leakpaths. The calculation methodology for the fugitive emissions is:

$$ER = \left(\frac{EF * CLP}{24}\right) * \left[(1 - CE) * HPP\right]$$

where:
ER = emission rate (lb/period)
EF = ROC emission factor (lb/clp-day)

CLP = component-leakpath (clp)
CE = control efficiency
HPP = operating hours per time period (hrs/period)

Differing emission control efficiencies are credited to all components that are safe to monitor (as defined per Rule 331) due to the implementation of an APCD-approved Inspection and Maintenance program for leak detection and repair consistent with Rule 331 requirements (See Table 4.3-1 in Attachment A). The control efficiencies vary based on component design, monitoring frequency, and leak detection threshold. This facility operates bellows seal valves (100% control), Category A valves and flanges/connections (84% control), Category C valves and flanges/connections (87% control), Category E valves and flanges/connections (88% control), Category F valves and flanges/connections (90% control), Category H valves (90% control), Category I valves (92% control), and 80% for the remaining safe-to-monitor components. Unsafe to monitor components are not eligible for I&M control credit. (See Permit Guideline Document 15 – *Fugitive Emissions from Valves, Fittings, Flanges, Pressure Relief Devices, Seals, and Other Components – Component-Leakpath Method* for a detailed discussion of the various categories defined for valves and flanges/connections). Ongoing compliance is determined in the field by inspection with an organic vapor analyzer and verification of operator records.

BACT standards apply for Rule 331 components subject to NSR BACT provisions of that rule. Table 4.4 (*Rule 331 BACT Requirements*) lists the specific BACT requirements for these components. More recent BACT determinations identify minor leak performance standards of 100 ppmv as methane (above background). Flanges/connections subject to the 100 ppmv standard are classified as E100 clps, which are assigned a mass emission control efficiency of 90 percent.

ExxonMobil has classified a large number of components as “emitters less than 500 ppmv” (Category B) and “emitters less than 100 ppmv” (Category C, E, and F). The component-leakpaths monitored at 500 ppmv or 100 ppmv are assigned a mass emission control efficiency depending on the monitoring frequency. Category B component-leakpaths are maintained at or below 500 ppmv as methane, and Categories C, E, and F component-leakpaths are maintained at or below 100 ppmv as methane, monitored per EPA Reference Method 21. For such Category B component-leakpaths, screening values above 500 ppmv trigger the Rule 331 repair process per the minor leak schedule. Screening values above 100 ppmv trigger the Rule 331 repair process per the minor leak schedule for Categories C, E, and F component-leakpaths.

4.4. Crew and Supply Boats

ExxonMobil uses crew and supply boats in support of the SYU Project. For these boats, two categories of boats may be used. One type is for dedicated project usage (DPV) that is controlled for NO_x and the other is used as a spot-charter and may be uncontrolled for NO_x. The spot-charter usage is limited to 10 percent of actual (DPV) boat usage. These vessels are primarily permitted under the OCS operating permits for each of ExxonMobil’s three platforms. A portion of each crew boat trip, however, occurs within state waters. Supply boats enter state territorial waters only during times when severe weather conditions create a safety hazard at which times the boat seeks shelter at Cojo Anchorage near Government Point. The supply boats are permitted for use within state waters for up to two and a half percent of their total usage. As required under APCD rules, emissions from the crew and supply boats are included in the LFC permit. Crew boat operations occur from the Ellwood Pier to each of ExxonMobil’s three OCS platforms. Supply boat operations occur from Port Hueneme to each of ExxonMobil’s three OCS platforms.

These boats are all fueled with CARB diesel, so the SO_x emission limits have been revised to reflect a fuel sulfur content of 0.0015% by weight.

4.4.1 Supply Boat: The supply boat used to establish the potential to emit is the M/V Santa Cruz.

Main Engines –This boat is equipped with two main propulsion diesel-fired IC engines (CAT 3516B). These engines are rated at 2,000 bhp at 1600 rpm for continuous duty ("A" rating). These engines are optimized for low emissions (NO_x) through use of Dual Advanced Diesel Engine Management (ADEMII) modules with electronically controlled unit injectors, as well as dual turbochargers and a separate circuit aftercooler core. The NO_x emission factor is based on the existing operating permit limit of 8.4 g/bhp-hr (337 lb/1000 gallons). ROC and CO emission factors have been updated to reflect the larger size of these engines and are taken from Table II-3.3 of USEPA, AP-42 (Volume II). The SO_x emission factor reflects a fuel sulfur content of 0.0015 weight percent.

Auxiliary Engines – The auxiliary diesel-fired engines on this vessel include two 170 kW CAT 3306B DIT generator sets each powered by identical 245 bhp engines. The bow thruster and winch engine are uncontrolled units on the M/V Santa Cruz. The bow thruster is powered by a CAT 3408C DITA 500 bhp engine, and the winch is powered by a 409 bhp engine. The same USEPA AP-42 emissions factors used in the original operating permit are still applicable. The SO_x emission factor reflects a fuel sulfur content of 0.0015 weight percent.

4.4.2 Crew Boat: The crew boat now used to establish the potential to emit is the *M/V Callie Jean*.

Main Engines - This boat is equipped with four main propulsion diesel-fired IC engines (DDC/MTU 12V-2000). These engines are rated at 965 bhp each for continuous duty for a total of 3,860 bhp. These engines are optimized for low emissions (NO_x) through use of DDEC electronic control systems, as well as dual turbochargers and intercooling. The NO_x emission factor is based on the existing OCS operating permit limit of 8.4 g/bhp-hr (337 lb/1000 gallons). ROC and CO emission factors have been updated to reflect the larger size of these engines and are taken from Table II-3.3 of USEPA, AP-42 (Volume II). The SO_x emission factor reflects a fuel sulfur content of 0.0015 weight percent.

Auxiliary Engines - Auxiliary diesel-fired engines on this boat include two 131 bhp diesel-driven generators (Detroit Diesel 3-71). These auxiliary engines are not controlled for NO_x.

Per DOI No. 0042 Mod - 01, ExxonMobil installed new Tier II engines on the *M/V Broadbill.* The four main propulsion engines are Tier II Detroit Diesel Series 60 engines (each rated at 600 bhp). The two auxiliary engines are Tier II Northern Lights Model M40C2 engines (each rated at 62 bhp). The main propulsion engines are optimized for low emissions (NO_x) through use of DDEC electronic control systems, as well as turbochargers.

4.4.3 Calculation Methods: The permit assesses emission liability for main engines based solely on a single emission factor (the cruise mode). The calculation methodology for the crew and supply boat main engine emissions is:

$$ER = \frac{(EF * EHP * BSFC * EL * TM)}{10^3}$$

where:
ER = emission rate (lbs per period)
EF = full load pollutant specific emission factor (lb/1000 gallons)
EHP = engine max rated horsepower (bhp)
BSFC =engine brake specific fuel consumption (gal/bhp-hr)
EL = engine load factors (percent of max fuel consumption)
TM = time in mode (hours/period)

The calculations for the auxiliary engines are similar, except that a 50 percent engine load factor for the generators is utilized. Compliance with the main engine controlled emission rates shall be assessed through emission source testing. Ongoing compliance will be assessed through implementation of a APCD-approved Boat Monitoring and Reporting Plan.

4.5. Thermal Oxidizer

4.5.1 General: The thermal oxidizer, located in the oil plant, serves as the emission control for all process waste gases. The John Zink Co. Model ZTOF-BC thermal oxidizer is designed for smokeless operation and receives waste gases from three header systems: high pressure header, low pressure header and acid gas header. In addition, the PSV from the ammonia storage tank is piped to the thermal oxidizer via the ammonia flare header, and there is an acid gas enrichment fuel line. The gases from each header are combusted in separate burners. The thermal oxidizer is a refractory lined stack with burners near the base. The stack is designed as a radiation barrier and to provide a natural convection air flow to enhance the combustion process. Steam injection is available at the base of the stack to eliminate smoking, if needed. The pilot system is a ring of 28 pilots with each flame pilot present at all times; a thermocouple is used at each pilot to detect the presence of the flame.

The thermal oxidizer is 115 feet high with outside diameters of 72 feet for the radiation barrier and 36 feet for the stack. The thermal oxidizer is rated at 3193 MMBtu/hr with the following capacities: high pressure header 24 million scfd (163,327 lb/hr); low pressure header 10.34 million scfd (49,980 lb/hr); acid gas header 5.25 million scfd (15,962 lb/hr); pilot & purge 4,000 scfh; and, acid gas enrichment gas 1.25 million scfd.

Potential flaring emissions from the high pressure header are minimized through the use of a "jumper" line to the second stage of the OTP vapor recovery compressor. At low flow events, valving bypasses the thermal oxidizer. When the load of the OTP compressors (8.8 million scfd) is about to be reached, the valving is set to re-direct the gas to the thermal oxidizer.

4.5.2 Operating Modes: This permit categorizes all flaring activities into one of the following four categories:

- *Purge and Pilot* - Up to 4,000 scfh of sales gas is used to maintain pilot flames and to purge the thermal oxidizer. Per APCD P&P 6100.004, this category is included in all emission scenarios (i.e., hourly, daily, quarterly and annual).

- *Planned Continuous* - This category includes all continuous flaring events. The volume is based on one-half the minimum detection limits of each of the three flare header flow meters. The sulfur content of 500 ppmv is based on the exemption granted to ExxonMobil under Rule 359. Per APCD P&P 6100.004, this category is included in all

emission scenarios.

- *Planned Other* - This category includes planned infrequent flaring events such as purging of vessels for maintenance, sulfur plant catalyst change-outs, condensate stabilizer maintenance and crude stabilizer maintenance. This category includes operations occurring a maximum of four times per year. Per APCD P&P 6100.004, emissions from this category are included only in the quarterly and annual emission scenarios.

- *Unplanned Other* - This category includes unplanned frequent flaring events such as releases from pressure relief valves and flaring of off-spec gas that occur more than 4 times per year from the same cause from the same processing unit or equipment type. This category also includes unplanned infrequent flaring events such as failure of processing equipment that occur no more than 4 times per year from the type of event from the same cause from the same processing unit or equipment type. Per APCD P&P 6100.004, emissions from this category are included only in the quarterly and annual emission scenarios.

Attachment 10.2 documents the basis and assumptions used for all thermal oxidizer emission calculations.

4.5.3 Emission Factors: The emission factors are based on AP-42, Chapter 3, Section 4. The most current update (Supplement D - March 1998) is used. The emission factors are consistent with the Table 3.1.1 of the APCD's Flare Study Phase I Report (July 1991) for Enclosed Thermal Oxidizer, except that the most recent AP-42 factors are used. The SO_x emission factor is determined using the equation:

$$EF = \frac{(0.169 * ppmvS)}{(HHV)}$$

The calculation methodology for the flare emissions is:

$$ER = \frac{(EF * SCFPP * HHV)}{10^6}$$

where:

ER =	emission rate (lb/period)
EF =	pollutant specific emission factor (lb/MMBtu)
SCFPP =	gas flow rate per operating period (scf/period)
HHV =	gas higher heating value (Btu/scf)

To meet the requirements of Rule 359 ExxonMobil will use purge and pilot gas which complies with the rule limit of 239 ppmv and has obtained APCD approval to offset all other planned SO_x emissions. ExxonMobil's fuel gas does not exceed a total sulfur content of 24 ppmv.

4.5.4 Meters: The low pressure, high pressure and acid gas headers are each equipped with two volumetric flow meters, one for high range and one for low range. In addition, one flow meter each is in place for the ammonia header, ammonia header purge line, pilot gas line and acid gas enrichment fuel line. A thorough description of the thermal oxidizer's meters may be found in Appendix D-13 (LFC Flare Gas Measurement, Sampling & Emission Calculation) of the APCD-

approved CEM Plan. To establish the allowable Planned Continuous flaring volumes, the low flow cutoff of each meter is required. Continuous flaring is assumed for the volumes up to this low flow cutoff point. Via their CEM Plan, ExxonMobil is using the low flow cutoff value based on manufacturer minimum velocity detection limits (0.25 fps). Since the high pressure flare is connected to the OTP vapor recovery compressor it is assumed to have no minimum low flow cutoff. The initial low flow cutoff values are: 1,414 scfh for the LP flare meter and 245 scfh for the acid gas flare header.

4.6. Tanks/Sumps/Separators

4.6.1 General: The LFC facility contains several tanks, sumps, separators and other vessels that have the potential to emit reactive organic compounds. This permit categorizes these emissions units as belonging to one of four groups. Group A includes the tanks subject to NSPS Kb (i.e., the two Oil Storage Tanks and the two Rerun Tanks). Group B includes equipment whose emissions are subject to Rule 325 and where the emissions are determined using the KVB method of service type and surface area (i.e., oil/water separators, open drain sumps, backwash sump, oily sludge thickener, equalization tank) and where each unit is controlled via vapor recovery of carbon canister. Group C includes area drain sumps. Group D includes the 300 bbl Demulsifier Tank that is subject to Rule 326 as well as the two new 500 gallon demulsifier tote tanks.

The primary tanks are the two 270,000 barrel Oil Storage Tanks (with a working capacity of 254,591 barrels each) in the TT and the two 30,000 barrel Rerun Tanks in the OTP. Prior to being stored, NGL is injected into the treated oil from the OTP to raise the vapor pressure to a maximum of 11 psia at the oil storage tank at a temperature of 100 ºF. Through use of its DCS system, ExxonMobil controls the maximum rate at which the NGLs are injected (i.e., the spike rate) to minimize/eliminate PSV releases from these tanks.

Permit exempt tanks include diesel storage tanks and lube oil tanks. Attachment 10.4 contains a summary table of all the affected process units in this category and identifies applicability of Rules 325, 326, 331 and 344 as well as the types of controls used. A complete description of the use and design of each tank, sump, separator and vessel may be found in ExxonMobil's permit application material.

4.6.2 Emission Calculations:

Group A

Oil Storage Tanks: Emission calculations are based on USEPA Chapter 7 (5th Edition) equations. See Table 10.17 for the emission calculations for the Oily Storage tanks. Emissions and throughput for each tank are identical. The emissions are calculated to allow each tank to handle the entire permitted throughput for the facility. The tanks are treated as fixed roof tanks only. The internal floating roof is not considered an emission control device. Compliance with the mass emission limits and the vapor recovery efficiency requirements are based on monitoring the actual emissions released via the tank's PSVs (see Section 4.8).

Rerun Tanks: Emission calculations are based on USEPA Chapter 7 (5th Edition) equations. See Table 10.15 for the emission calculations for the Rerun tanks. Emissions are based on operations of the tank in off-spec/reject oil mode. Compliance with the mass emission limits and the vapor recovery efficiency requirements are based on monitoring the actual emissions released via the tank's PSVs (see Section 4.8).

Group B and Group C

Sumps, Separators, Equalization Tank, Oily Sludge Thickener: Emissions from the sumps, separators, Equalization Tank and the Oily Sludge Thickener are based on emission factors from APCD P&P 6100.060. This P&P uses the CARB/KVB Report (*Emissions Characteristics of Crude Oil Production in California*, January 1983) to estimate emissions for this type of equipment. The calculation is:

$$ER = \left(\frac{EF * SAREA}{24} \right) * \left(1 - CE \right) * HPP$$

where:

ER =	emission rate (lb/period)
EF =	ROC emission factor (lb/ft^2-day)
SAREA =	unit surface area (ft^2)
CE =	control efficiency
HPP =	operating hours per time period (hrs/period)

Compliance calculations for these emission units are the same (i.e., actual emissions equals permitted emissions).

Group D

Demulsifier Tank: Emission calculations are based on USEPA Chapter 7 (5th Edition) equations. See Table 10.16 for the compliance calculations which are based on throughput and TVP data using the AP-42 equations. The two 500 gallon demulsifier tanks may be used in lieu of the 300 bbl tank. Their emissions are assumed to be equal to or less than the 300 bbl tank.

Group E

Chemical Storage Tote Tanks: Portable tote tanks are used to deliver various chemicals to the plant's facilities. These tote tanks only dispense liquids. Some of these tote tanks contain ROCs and are not exempt under Rule 202. The emissions from these tanks are assumed to be very small and are assigned a default mass emissions rate of 0.10 tpy (200 lb/yr). To ensure that these emissions are maintained at these levels and to address BACT, all permitted tote tanks containing ROC compounds where the fluid vapor pressure is greater than 0.5 psia must be kept closed at all times and must be equipped with a functional PSV valve.

Other Non-Grouped Units

Vessels: Vessels designed as pressure vessels (greater than 15 psig) are not assessed mass emission limits as it is assumed that the only potential emissions from those vessels are from fugitive emission components. All pressure vessels are connected to the facility's gas gathering system. All PSVs, vents, and blowdown valves are connected to either that gas gathering system or the flare relief system header.

4.6.3 Emission Controls: Emission controls are used for Group A, B and D units and the Group C area drain sumps. The ROC controls used are vapor recovery or carbon canisters. The Equalization Tank uses a caustic packed bed venturi scrubber with mist eliminator for removing hydrogen sulfide and carbon canisters for removing residual hydrogen sulfide and ROCs. Section 4.8 describes the vapor recovery systems in use at the facility. In addition, NSPS Kb requires that

ExxonMobil operate the vapor recovery systems in accordance with the parameters identified in a vapor recovery system *Operating Plan*.

The carbon canister units are identical units each designed to hold 1,000 pounds of carbon. The carbon used is designed to handle petroleum hydrocarbon vapor streams. A control efficiency of 75 percent ROC (by mass) is assumed for each unit. Monitoring of each unit is required throughout the year to ensure that each unit is effective at removing ROC at all times.

The Equalization Tank has the potential to emit large quantities of hydrogen sulfide (up to 100 pounds per hour based on 15,000 ppm). The venturi scrubber uses a 4 percent caustic solution in a packed bed design. The scrubber uses the venturi principle to draw up to 360 acfm of tank vapors and requires that the circulation pump run at all times during use. The outlet from the scrubber is routed to two carbon canisters (in a parallel arrangement) to remove residual hydrogen sulfide and to control ROCs. The scrubber is designed to achieve a control efficiency of 99.9 percent (mass basis) in removing hydrogen sulfide (15 ppmw or 13 ppmv).

4.7. Sulfur Recovery Unit/Tail Gas Cleanup Unit and Incinerator

4.7.1 General: Acid Gas Sulfur Recovery and Tail Gas Cleanup is accomplished by a three-catalytic stage Claus Plant with steam reheat, followed by a selective amine type Tail Gas Cleanup Unit (TGCU). The TGCU contains two sections, a hydrogenation section and an amine absorption/regeneration sections which recycles acid gas to the Claus Plant. This amine section is also used to enrich the acid gas produced in the Fuel Gas and LPG Amine Units by selective removal of H_2S, thereby providing a rich H_2S acid gas feed to the Claus Plant.

4.7.2 Waste Gas Incinerator – Design/Controls: The Waste Gas Incinerator is designed to combust two sulfur-laden waste streams. The primary stream is Tail Gas from the TGCU Amine Contactor (MAF-4152) from the TGCU Amine Absorption process. The second stream is spent air/fuel gas from the Disulfide Oil Separator (MDB-4137) from the Merox process. Both streams pass through gas/vent scrubbers to knock out entrained liquids and are then combusted in the Incinerator. The Incinerator is custom designed for a hydrocarbon destruction efficiency of greater than 99.9 percent. In order to reduce NO_x emissions, it is also designed for a minimum requirement of auxiliary firing. NO_x is further reduced by the use of Low-NO_x burners and Thermal DeNO_x (ammonia injection). The Thermal DeNO_x process operates by mixing NH_3 with NO_x-containing flue gases in an effective temperature range for a certain residence time. The Incinerator has been designed to achieve a temperature of 1750 ^oF and maintain this temperature for at least 0.5 seconds after NH_3 is injected. The use of Thermal DeNO_x in this configuration (with Low-NO_x burners) achieves a minimum 50 percent reduction in NO_x emissions. CEMS are installed to continuously monitor emissions of NO_x and SO_x. In addition, the H_2S inlet concentration from the TGCU Amine Contactor is continuously monitored.

4.7.3 Waste Gas Incinerator – Emission Calculations: Emissions of SO_x (as SO_2) are documented in Table 10.14 "*SGTP Incinerator SO_2 Calculations*". The two inlet streams and fuel gas enrichment stream are calculated separately. Scenario S1 addresses the true material balance based on process design parameters. Scenario S2 takes the true material balance data and inflates the result by 28 percent (as documented in the March 21, 1986 letter from ExxonMobil to the APCD). Permitted emissions of SO_x are based on operations with and without the Merox process. Emission of NO_x (as NO_2) are based on manufacturer data.

4.8. Vapor Recovery Systems

4.8.1 General: The LFC facility has a number of vapor recovery systems designed to collect low pressure vapors from tanks, sumps, drains, separators and other process units. Vapor recovery systems in the SGTP and TT are themselves routed to the main LFC vapor recovery system in the OTP. Figure 4.2 shows a block diagram of the emission units connected to the OTP vapor recovery system. The vapor recovery systems are assigned a control efficiency of 95 percent for short-term and 99.8 percent for long term emission scenarios. For vessels that are designated as pressure vessels (by design), vapor recovery is assumed to be 100 percent. Compliance with the vapor recovery efficiencies are based on monitoring the mass emissions emitted from the Oil Storage Tanks and Rerun Tanks. ExxonMobil records the actual mass emissions from these tanks by continuously monitoring the position of all PSVs (closed/open), tank pressure and time open for each PSV. This data, coupled with PSV manufacturer flow curves and actual tank headspace gas properties, is used to calculate the mass emissions during each PSV opening event. The specific calculation procedures and manufacturer data sheets/flow curves for each PSV is contained in the APCD-approved NSPS Kb Operating Plan. Non-compliance with any of the daily, quarterly or annual mass emission limits from the Oil Storage or Rerun Tanks is also assumed to be non-compliance with the vapor recovery system control efficiencies.

4.8.2 Oil Treating Plant: The OTP vapor recovery system collects excess vapors from tanks and equipment containing organic compounds and acid gas and operating below the SOV compressor suction pressure of 35 psig. The system has a suction scrubber, two compressors, and a recycle cooler. One compressor is sized for normal vapor flow rate. The second compressor is sized for the normal flow rate plus the vapor flow rate from the Rerun Tanks when all the inlet crude emulsion is diverted from the Inlet Emulsion Meter Drum. The larger compressor starts automatically on high suction pressure. The OTP compressors discharge to the inlet of the SOV Suction Cooler.

4.8.3 Stripping Gas Treating Plant: The vapor recovery system in the SGTP consists of a low pressure header collection system and a vapor recovery compressor that discharges into the vapor recovery system of the Oil Treating Plant. Another vapor recovery system is used to collect vapors from the LPG loading and storage operation. A vapor balance line is used between the LPG trucks and LPG Storage Bullets. Each of the LPG Storage Bullets is tied to the vapor recovery system, which recovers excess vapors and routes them to the Oil Treating Plant compression system. A low pressure vapor recovery line is used to reduce emissions during the coupling operation between the LPG loading arm and the LPG trucks that is directly tied to the OTP vapor recovery system.

4.8.4 Cogeneration Power Plant: The CPP 6-inch fuel gas line is connected to the OTP vapor recovery system. The 1-inch vapor recovery line is valved to a normally closed position and is used for maintenance purposes.

4.8.5 Transportation Terminal: The Crude Storage Tanks' vapor spaces are connected by a vapor transfer line. This line allows transfer of vapor between the tanks during filling, tank emptying, and barometric and thermal value changes in the vapor space. A pressure controller on the common line senses low pressure (below 0.6" w.c.) and allows gas from the Blanket Gas Header to enter the line and provide gas blanketing. Another pressure controller on the common line senses high pressure (above 1" w.c.) and releases excess vapors to the TT Tank Vapor Compressors suction header. Flashed vapor from the Closed Drain Sump, together with excess blanket gas, collects at the TT Tank Vapor Compressor suction scrubber. This vessel is maintained at a vacuum of 5 psi (9.7 psia) by the TT Tank Vapor Compressors. The collected

vapors are compressed to a pressure of 5 psig which is sufficient to transfer the vapors to the OTP vapor recovery system.

4.9. Stationary Combustion Sources

4.9.1 General: The stationary combustion sources associated with the LFC facility consist of three diesel-fired emergency equipment items (two firewater pumps each rated at 238 bhp and one floodwater pump rated at 230 bhp). These engines were permitted per PTO 11600 and 11601 due to the March 17, 2005 revision to APCD Rule 202 {*Exemptions to Rule 201*} that resulted in the removal of the compression-ignited engine (e.g., diesel) permit exemption for units rated over 50 brake horsepower (bhp). That exemption was removed to allow the APCD to implement the State's Airborne Toxic Control Measure for Stationary Compression Ignition Engines (DICE ATCM).

4.9.2 Emission Factors: Emission factors for the IC engines are based on Table 3.3-1 of USEPA AP-42. The SO_x emission factor is based on mass balance. Mass emission estimates are based on the maximum allowed hours for maintenance and testing. Emissions are determined by the following equations:

E1, lb/day = Engine Rating (bhp) * EF (g/bhp-hr) * Daily Hours (hr/day) * (lb/453.6 g)
E2, tpy = Engine Rating (bhp) * EF (g/bhp-hr) * Annual Hours (hr/yr) * (lb/453.6 g) * (ton/2000 lb)

The emission factors (EF) were chosen based on each engine's rating and age. Daily hours are assumed to be 2 hours per day (re: ATCM FAQ Ver 1.5 #32). The firewater pump engines identified in this permit must comply with NFPA 25. While the NFPA 25 does not specify an upper limit on the hours to comply with the maintenance and testing requirements, these in-use firewater pumps have previously been restricted to 200 hours/year per ATC 5651.

4.9.3 Emission Controls: There are no controls used for the IC engines.

4.10. Other Emission Sources

4.10.1 Pigging: The transportation terminal contains an oil emulsion pig receiver. Pipeline pigging operations originate from Platform Hondo. After the pigging operation is complete, the receiver is purged with sweet fuel gas and bled down to no more than 1 psig prior to opening to the atmosphere. The calculation per period is:

$$ER = V_1 * \rho * wt\% * EPP$$

where:
ER = emission rate (lb/period)
V_1 = volume of vessel (ft^3)
ρ = density of vapor at actual conditions (lb/ft^3)
wt % = weight percent ROC-TOC
EPP = pigging events per time period (events/period)

4.10.2 General Solvent Cleaning/Degreasing: Solvent usage (not used as thinners for surface coating) occurring at the LFC facility as part of normal daily operations includes cold solvent degreasing and wipe cleaning. Mass balance emission calculations are used assuming that all the solvent used evaporates to the atmosphere.

4.10.3 Surface Coating: Surface coating operations typically include normal touch-up activities. Entire facility painting programs are performed once every few years. Emissions are determined based on mass balance calculations assuming that all solvents evaporate to the atmosphere. Emissions of PM/PM_{10} from paint overspray are not calculated due to the lack of established calculation techniques.

4.10.4 Abrasive Blasting: Abrasive blasting with CARB-certified sands may be performed as a preparation step prior to surface coating. Particulate matter is emitted during this process. A general emission factor of 91 pound PM per 1000 pound of abrasive and 13 pound PM_{10} per pound abrasive is used (USEPA, 5th Edition, Supplement D, Table 13.26-1, 9/97) to estimate emissions of PM and PM_{10}.

4.10.5 Compressor Vents: The three SOV compressors and two VR compressors are each equipped with dual sealing systems that are connected to vapor recovery via the distance piece of each compressor. There are potential emissions on the back end of each distance piece/seal system. As such, each compressor system (SOV and VR) collects these vapors through a common vent system and directs the vapors to a carbon canister system. Based on estimates from ExxonMobil, the ROC emissions (post-carbon) from each vent are not expected to exceed 0.10 lb/hr.

4.11. BACT/NSPS/NESHAP/MACT

4.11.1 BACT: Best Available Control Technology is required for all emission units for NO_x, ROC, CO, SO_x, PM and PM_{10}. The applicable BACT control technologies of this permit are listed in Table 4.1 and the corresponding BACT performance standards are listed in Table 4.2. Tables 4.3 and 4.4 list the BACT requirements for the inspection and maintenance FHC Program. In addition, chemical tote tanks containing ROCs where the fluid vapor pressure is greater than 0.5 psia must be closed at all times and must be equipped with a functional PSV valve. Figure 4.1 identifies the location of analyzers used in determining compliance with BACT and Subpart LLL requirements for the SRU.

Pursuant to APCD Policy and Procedure 6100.064, once an emission unit is subject to BACT requirements, then any subsequent modifications to that emissions unit or process is subject to BACT. This applies to both *de minimis* changes and equivalent replacements, regardless of whether or not such changes or replacements require a permit.

4.11.2 Rule 331 BACT Determinations: Pursuant to Sections D.4 and E.1.b of Rule 331, components are required to be replaced with BACT in accordance with the APCD's NSR rule. These BACT determinations are based on a case-by-case basis following the APCD's guidance document for determining BACT due to Rule 331. Rule 331 BACT determinations are documented in Table 4.4.

4.11.3 NSPS: Discussion of applicability and compliance with New Source Performance Standards is presented in Section 3 of this permit. An engineering analysis for the affected equipment is found in the sections above.

4.11.4 NESHAP: ExxonMobil has not identified any equipment or processes that are subject to an applicable National Emission Standard for Hazardous Air Pollutants.

4.11.5 MACT: On June 17, 1999, EPA promulgated Subpart HH, a National Emission Standards for Hazardous Air Pollutants (NESHAPS) for Oil and Natural Gas Production and Natural Gas

Transmission and Storage. ExxonMobil submitted an Initial Notification of Applicability by June 17, 1999. Based on that submittal, and several subsequent correspondences from ExxonMobil (2/15/02 and 5/14/02), the APCD determined that only the NGL storage vessels are subject to MACT standards (40 CFR 63.776 (b) (2)). The storage vessels are operated as a closed system with no detectable emissions, so ExxonMobil is in compliance. General MACT requirements applicable to this facility are contained in Condition 9.B.16.

4.12. CEMS/Process Monitoring/CAM

4.12.1 CEMS: The APCD reviewed the proposed facility to determine the emission sources and other parameters that must be monitored continuously to ensure permit compliance. Attachment 10.1 provides details on the CEM requirements for the SYU Project. In order for the APCD to assess facility operation status and to ensure major emission sources are operating properly, selected monitor data are telemetered to the APCD offices on a real-time basis. Both calculated and raw data is telemetered in accordance with APCD specifications for the life of the project, as required by the applicable permit conditions.

Major emission sources requiring continuous monitoring are the Cogeneration Power Plant, the WGI Incinerator and the Thermal Oxidizer. Besides pollutant emissions, process parameters, such as fuel gas flow rate and stack temperature, also require monitoring. Detailed data are required on the gas turbine operation, SCR emission control system for the turbine, sulfur recovery unit, and the transportation terminal vapor control system, to ensure that emission controls are operating as specified in the applicable Permit Conditions. Detailed information on the Thermal Oxidizer is required to monitor facility breakdown circumstances and to inventory emissions associated with flaring events. The APCD may require additional continuous emission monitors and redundant monitor system components in the future, if problems with the facility or monitoring operations that warrant additional monitoring develop.

The monitors must meet the requirements set forth in APCD Rule 328 and the Code of Federal Regulations (CFR), 40 CFR Parts 51, 52 and 60. These must be installed in accordance with manufacturer's specifications, and EPA requirements as specified in the CFR.

ExxonMobil must obtain the APCD's approval of any modifications/updates to the current CEMS Plan. ExxonMobil is required to follow the APCD *Continuous Emission Monitoring Protocol Manual* (10/22/92 and all updates).

All continuously monitored parameters must be recorded on backup strip chart recorders unless this requirement is waived by the APCD. The required data will be consolidated and submitted to the APCD as required by Section 9.C. More frequent reporting may be required if the APCD deems this necessary. Minimum data reporting requirements must be consistent with APCD Rule 328 and must include the following:

- Hourly data summaries for each parameter;
- Summary of monitor downtime, including explanation and corrective action; and
- Report on compliance with permit requirements, including any corrective action being taken.

- Operator log entries, strip charts, and/or magnetic tapes or discs must be provided upon request by the APCD.

4.12.2 Process Monitoring: In many instances, ongoing compliance beyond a single (snap shot) source test is assessed by the use of process monitoring systems. Examples of these monitors include: engine hour meters, fuel usage meters, water injection mass flow meters, flare gas flow meters and hydrogen sulfide analyzers. Once these process monitors are in place, it is important that they be well maintained and calibrated to ensure that the required accuracy and precision of the devices are within specifications. At a minimum, the following process monitors - as well as any process monitor not listed that is used to assess compliance - will be required to be calibrated and maintained in good working order:

- Crew and Supply Boat Diesel Fuel Use Meters (main and auxiliary engines)
- Flare Header Flow Meters (Low Pressure, High Pressure, Purge/Pilot, Acid Gas, Acid Gas Fuel Enrichment, Ammonia)
- Hour Meters (emergency firewater pumps IC engines)
- CPP (fuel flow meters, water injection meter, ammonia injection meter, SCR inlet temperature indicator, gas turbine electrical meter, steam turbine electrical meter)
- OTP (oil and gas production flow meters, Thermal Oxidizer pilot sensors)
- TT (PSV proximity switches)
- WGI Incinerator (ammonia injection meter, combustion chamber temperature indicator, flow meter, H_2S analyzer on inlet)
- Fuel Gas System (H_2S analyzer)

ExxonMobil shall implement calibration and maintenance requirements for the process monitors identified above (as well as any process monitor not listed that is used to assess compliance) according to the APCD approved CEMS Plan. This Plan takes into consideration manufacturer recommended maintenance and calibration schedules. Where manufacturer guidance is not available, the recommendations of comparable equipment manufacturers and good engineering judgment are to be utilized.

4.12.3 CAM: *Exxon – SYU Project* is a major source that is subject to the USEPA's Compliance Assurance Monitoring (CAM) rule (40 CFR 64). Any emissions unit at the facility with uncontrolled emissions potential exceeding major source emission thresholds for any pollutant is subject to CAM provisions. Currently no units at LFC require a CAM plan.

4.13. Source Testing/Sampling

Source testing and sampling are required in order to ensure compliance with permitted emission limits, BACT, NSPS, prohibitory rules, control measures and the assumptions that form the basis of this operating permit. Tables 4.5 through 4.7 details the emission units, pollutants and parameters, methods and frequency of required testing. ExxonMobil is required to follow the APCD *Source Test Procedures Manual* (May 24, 1990 and all updates).

Section 9 details the sampling that is required. All sampling and analyses are required to be performed according to APCD approved procedures and methodologies. Typically, the appropriate ASTM methods are acceptable. All sampling and analysis must be traceable by chain of custody procedures.

4.14. Operational and Regional Monitoring

4.14.1 Regional Monitoring: As required by permit condition XII-6 in the County's Final Development Plan, ExxonMobil must install and operate monitors to provide data on regional ozone levels. These monitors must be installed and operated at locations specified by the APCD and according to the APCD-approved *Air Quality and Meteorological Regional and Operation (AQMRO) Monitoring Plan.*

The sites identified in Table 4.8 shall provide information on ozone levels in regions of the airshed where ExxonMobil's SYU project could reasonably be expected to contribute to the ozone levels. They include the Nojoqui area of Gaviota Pass, Carpinteria, Las Flores Canyon and at El Capitan.

LFC's permit required ExxonMobil to assume responsibility of the Nojoqui Monitoring Station once GTC ceased operation of the Gaviota Marine Terminal. GTC shutdown the marine terminal in the end of 2005, and ExxonMobil took over operations of the monitoring station January 1, 2006. ExxonMobil signed an agreement with the APCD, in which ExxonMobil will reimburse APCD to operate and maintain the Nojoqui Monitoring Station.

ExxonMobil will share the costs of operating the Carpinteria monitoring site while the Point Arguello Project is operating. If the Point Arguello Project ceases operation, ExxonMobil will be responsible for operating all parameters required of ExxonMobil at this monitoring site.

ExxonMobil will share no less than 25 percent of costs for operating the APCD's El Capitan monitoring station, reimbursable to the APCD.

4.14.2 Operational Monitoring: ExxonMobil shall operate the LFC1 post-construction monitoring site to provide data on the impacts of the SYU facilities operation. This station is also a regional ozone monitoring site. The parameters to be monitored at these sites are identified in Table 4.8. These monitors must be installed and operated at locations specified by the APCD and according to a APCD-approved *AQMRO Monitoring Plan.*

4.15. Odor Monitoring

ExxonMobil shall implement the APCD-approved *Odor Monitoring Plan* for ambient odor monitoring and a human olfactory verification program for the life of the SYU Project. The site identified in Table 4.9, *LFC Odor*, shall monitor the parameters identified in Table 4.9. Up to two additional monitors may be required to be installed by ExxonMobil to monitor odorous emissions emanating from the LFC facilities and offshore operations if the APCD determines that odor thresholds are being exceeded. Other odor-related pollutant -specific monitoring equipment may be added to the stations, if deemed necessary by the APCD.

4.16. Part 70 Engineering Review: Hazardous Air Pollutant Emissions

Hazardous air pollutant emissions from the different categories of emission units at the LFC facility are based on emission factors listed in USEPA AP-42. Where no emission factors are available, the HAP fractions from the ARB VOC Speciation Manual – Second Edition (August 1991) are used in conjunction with the ROC emission factor for the equipment item in question.

Potential HAP emissions from each emissions unit at the LFC facility are listed in Section 5.

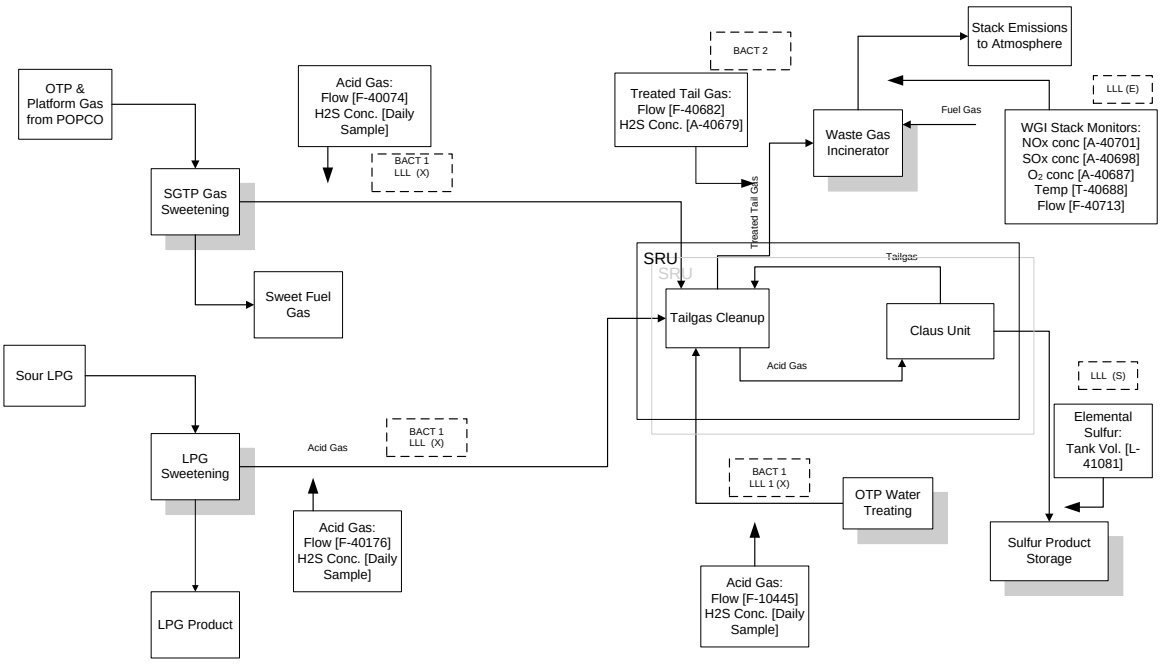

Subpart LLL Removal Efficiency is determined on a daily basis per Table 2 of 40 CFR Subpart LLL:

$$X = KQ_aY$$

(X) = H_2S rate (long ton/day) in acid gas feed entering SRU
(Y) = Sulfur content of acid gas entering SRU, H_2S (mole %)
K = 3.707×10^{-5} long ton/dscf
Q_a = Avg. Volumetric flow rate of acid gas from sweetening unit (dscf/day)

BACT efficiency: BACT 1 to BACT 2
H_2S removal efficiency = (B1 - B2)/B1

Subpart LLL efficiency:
SO_2 removal efficiency = (S/S+E)

(S) = Liquid sulfur production rate (LT/day)
(E) = Sulfur emission rate as elemental sulfur (lb/hr)

Figure 4.1 SRU/TGCU BACT and Subpart LLL Monitoring Systems

Table 4.1 BACT Control Technology

Source	ROC	NO_x (as NO_2)	SO_x (as SO_2)	CO	PM/PM_{10}
CPP Gas Turbine	Use of pipeline quality natural gas as fuel. Proper combustor operation (e.g., tuning)	Steam injection and SCR (90 percent overall control)	Use of pipeline quality natural gas as fuel. Total sulfur content not to exceed 24 ppmv.	Proper combustor operation (e.g., tuning)	Use of pipeline quality natural gas as fuel. Proper combustor operation (e.g., tuning)
CPP Heat Recovery Steam Generator (HRSG)	Use of pipeline quality natural gas as fuel. Proper combustor operation (e.g., tuning)	Low-NOx burner design and SCR (90 percent overall control)	Use of pipeline quality natural gas as fuel. Total sulfur content not to exceed 24 ppmv.	Proper combustor operation (e.g., tuning)	Use of pipeline quality natural gas as fuel. Proper combustor operation (e.g., tuning)
SGTP – Sulfur Recovery	Use of pipeline quality natural gas in TGCU incinerator. Proper combustor operation (e.g., tuning)	Low-NOx burner design and Thermal DeNOx on TGCU Incinerator	3-Stage Claus Process with Flexsorb SE tail gas cleanup unit (99.9 percent by mass H_2S control)	Use of pipeline quality natural gas in TGCU incinerator. Proper combustor operation (e.g., tuning)	Use of pipeline quality natural gas in TGCU incinerator. Proper combustor operation (e.g., tuning)
Tanks/Sumps: (Oil Storage Tanks, Rerun Tanks, Oily Sludge Thickener, Backwash Sump)	Vapor recovery system (gas blanketed)				
Equalization Tank, Demulsifier Tank, Compressor Vents	Carbon Canister		H_2S: Venturi Scrubber with caustic solution (Equalization Tank only)		
Sumps/Separators: (Area Drain Oil/Water Separators, Open Drain Sumps)	Carbon Canister				
Thermal Oxidizer	Use of pipeline quality natural gas in for pilot, purge and Acid Gas Enrichment Fuel. Proper combustor operation (e.g., tuning)	Use of pipeline quality natural gas in for pilot, purge and Acid Gas Enrichment Fuel. Proper combustor operation (e.g., tuning)	Use of pipeline quality natural gas as fuel. Total sulfur content not to exceed 24 ppmv.	Use of pipeline quality natural gas in for pilot, purge and Acid Gas Enrichment Fuel. Proper combustor operation (e.g., tuning)	Use of pipeline quality natural gas in for pilot, purge and Acid Gas Enrichment Fuel. Proper combustor operation (e.g., tuning)

Source	ROC	NO_x (as NO_2)	SO_x (as SO_2)	CO	PM/PM_{10}
NGL Loading and Storage	Vapor balance line between loading trucks and storage bullets and vapor recovery on the LPG loading arm.				
Fugitive ROC	APCD-approved Inspection & Maintenance program for all onshore facilities: pressure relief devices in HC service vented to vapor control system or flare; dual mechanical pump seals for light liquid streams; closed purge sample systems for regularly sampled gaseous and light liquid streams; no open-ended lines.				
Vacuum Trucks	Carbon Canisters				
Depressurizing Vessels	Depressurize to vapor control system, flare, or equivalent and purge with pipeline quality gas		For the SGTP, venting through amine contactor (TGCU) for H_2S control		
Crew and Supply Boats		Use of turbo charging/inter-cooling and ignition timing retard or equivalent.			
Solvents	Low VOC/Water Based solvents where feasible				

Table 4.2 BACT Performance Standards

Source	ROC	NO_x (as NO_2)	SO_x (as SO_2)	CO	PM	PM_{10}
CPP Gas Turbine [3, 4]	0.0026 lb/MMBtu	0.0300 lb/MMBtu	0.0034 lb/MMBtu	0.0216 lb/MMBtu at loads between 75% and 100%. 17 lb/hr at all loads	0.0198 lb/MMBtu	0.0158 lb/MMBtu
CPP Gas Turbine and HRSG Operating in Tandem [5, 6]	0.0055 lb/MMBtu	0.0272 lb/MMBtu	0.0034 lb/MMBtu	0.0260 lb/MMBtu at loads between 75% and 100%. 17 lb/hr at all loads	0.0163 lb/MMBtu	0.0130 lb/MMBtu
CPP HRSG Only [5, 6]	0.0095 lb/MMBtu	0.0300 lb/MMBtu	0.0034 lb/MMBtu	0.297 lb/MMBtu at all loads. 17 lb/hr at all loads	0.0050 lb/MMBtu	0.0040 lb/MMBtu
SGTP – Sulfur Recovery Unit (Claus and Tail Gas Unit)			99.9 percent (mass basis) H_2S sulfur removal efficiency at design throughput rate or 100 ppmv H_2S in feed to incinerator (whichever is more stringent)			
SGTP – TGCU Incinerator (w/Merox Vent) [5, 6]	0.0040 lb/MMBtu	0.12 lb/MMBtu and 38 ppmvd at 2% O_2	0.37 lb/MMBtu and 87 ppmvd at 2% O_2	0.092 lb/MMBtu	0.078 lb/MMBtu	0.0624 lb/MMBtu

[3] In addition to source testing, compliance with NO_x and CO BACT Performance Standards shall be demonstrated through use of CEMS and process flow monitoring data as required by the applicable Permit Condition in Section 9.C.

[4] "lb/MMBtu" standards are based on contribution of heating value from the fuel gas on a HHV basis.

[5] "lb/MMBtu" standards are based on contribution of heating value from the fuel gas and the waste gas on a HHV basis.

[6] In addition to source testing, compliance with NO_x and SO_x BACT Performance Standards shall be demonstrated through use of CEMS and process flow monitoring data as required by the applicable Permit Condition in Section 9.C.

Source	ROC	NO_x (as NO_2)	SO_x (as SO_2)	CO	PM	PM_{10}
SGTP – TGCU Incinerator (w/out Merox Vent) [7, 8]	0.0040 lb/MMBtu	0.12 lb/MMBtu and 38 ppmvd at 2% O_2	0.34 lb/MMBtu and 79 ppmvd at 2% O_2	0.092 lb/MMBtu	0.078 lb/MMBtu	0.0624 lb/MMBtu
Fugitive ROC	Compliance with NSPS KKK requirements (as applicable) and Table 4.3					
Tanks/Sumps connected to vapor recovery systems	Hourly and Daily: 95% recovery efficiency (mass basis) Quarterly and Annual: 99.8% recovery efficiency (mass basis) NSPS Kb for the Oil Storage and Rerun Tanks					
Equalization Tank Demulsifier Tank, Compressor Vents	75% recovery efficiency (mass basis)		H_2S: 99.9 percent recovery efficiency (mass basis) of H_2S and 13 ppmvd (Equalization Tk only)			
Sumps/Separators connected to carbon canisters	75% recovery efficiency (mass basis)					
Thermal Oxidizer – Flaring					Compliance with 40 CFR 60.18 5-minute opacity limits	Compliance with 40 CFR 60.18 5-minute opacity limits
Thermal Oxidizer – Purge/Pilot and Acid Gas Enrichment Fuel	0.0054 lb/MMBtu	0.098 lb/MMBtu	0.0034 lb/MMBtu	0.0824 lb/MMBtu	0.0075 lb/MMBtu	0.0075 lb/MMBtu

Source	ROC	NO_x (as NO_2)	SO_x (as SO_2)	CO	PM	PM_{10}
NGL Loading and Storage	Hourly and Daily: 95% recovery efficiency (mass basis) Quarterly and Annual: 99.8% recovery efficiency (mass basis)					
Vacuum Trucks	75% recovery efficiency (mass basis)					
Crew and Supply Boats (main engines)		337 lb/1000 gallons				

Table 4.3 Rule 331 Fugitive Inspection and Maintenance Program

	Standard Rule 331 Requirements	New Components (Subject to BACT)	Enhanced Fugitive I&M Requirements
Valves			
Leak Definition	Gaseous: 1,000 ppmv Liquid: Any Indication	Gaseous: 100 ppmv Liquid: Any Indication	Gaseous: 100 ppmv [d] --
Monitoring [e, f]	Quarterly	Quarterly	Monthly [c]
Relief Valve Monitoring	Gaseous: Vented to vapor control system Liquid: Quarterly [g]	-- --	-- --
Pump Monitoring [j]	Gaseous: Dual Seals, monthly Liquid: Monthly [g]	Gaseous: Dual Seals, monthly Liquid: Monthly [g]	-- --
Flanges/Connections			
Leak Definition	Gaseous: 1,000 ppmv	Gaseous: 100 ppmv	Gaseous: 100 ppmv [d]
Monitoring [e, f, l]	Annual	Annual	Monthly [c]
Compressors			
Monitoring [m]	Gaseous: Vented to vapor control system	Gaseous: Vented to vapor control system	--
Open-Ended Lines			
Monitoring [k, l]	Capped	Capped	--
Repair Requirements [n, o, p]	First attempt within 5 calendar days. Repair within 15 calendar days.	First attempt within 5 calendar days. Repair within 15 calendar days.	First attempt within 5 calendar days. Repair within 15 calendar days [d]
Recordkeeping and Reporting Requirements [q]	Similar to NSPS Subpart KKK	Similar to NSPS Subpart KKK	Similar to NSPS Subpart KKK

NOTE: These requirements are in addition to APCD Rule 331 and permit requirements. Where a conflict may occur, the requirement more protective to air quality (as determined by the Control Officer) shall apply

a. BACT applies to all components permitted on or after February 4, 1997. Similar to Standards of Performance for New Stationary Sources (NSPS); Equipment Leaks of VOC from Onshore Natural Gas Processing Plants; Final Rule, 40 CFR Part 60 Subpart KKK, FR Vol. 50, No. 121, June 24, 1985. Applicable to equipment in VOC service (that is, contains or contacts a process fluid that is at least 10 percent VOC by weight at 150°F) or in wet gas service (that is, contains or contacts inlet gas before the plant extraction process).

b. Applicable to oil components in heavy hydrocarbon Liquid service (that is, contains or contacts a process fluid that is less than 10 percent VOC by weight at 150°C).

Enhanced Fugitive Hydrocarbon Inspection and Maintenance Program

c. Reductions in fugitive emissions due to the implementation of the Enhanced Fugitive I&M Program defined in DOI 0040, DOI 0034, and DOI 002 assume that Category E and I valves and flanges/connections are accessible to monthly monitoring

d. The minor leak threshold for repairs is defined as 100 ppmv for those Category C and E valves and flanges/connections subject to the Enhanced Fugitive I&M Program defined in DOI 0034 and 0040.

Gas Components Leak Detection

e. Gaseous and Light hydrocarbon Liquid component Leakage monitoring will be determined by a hydrocarbon analyzer which uses the flame ionization detection method, and additionally by visual inspection.

f. Calibration of the hydrocarbon analyzer will be similar to NSPS requirements.

Heavy Hydrocarbon Liquid Leak Detection

g. Heavy hydrocarbon liquid component leakage monitoring will be determined by visual inspection. Monitoring with a hydrocarbon analyzer may be required.

Valves

h. Reductions in fugitive emissions due to the implementation of the Rule 331 APCD I&M Programs assume that all valves are accessible to quarterly monitoring.

i. The monthly/quarterly valve monitoring program required by the APCD is similar to that of the NSPS valve monitoring program.

Pumps

j. The APCD I&M program on pumps with dual mechanical seals is similar to that required by NSPS on pumps with single seals. This also includes single seals on the sweet crude oil rover sample pump, PBE-1349, PBH-3334 and PBE-3335.

Connections

k. The same record keeping and reporting procedures as NSPS are also required for connections; alternatively, a procedure approved by the Air Pollution Control Officer can be used.

l. It is assumed that the total connection count includes all connections required for the venting of relief valves to a vapor control system, the capping of open-ended lines, and the conversion of sampling to a closed purge system.

Compressors

m. The APCD fugitive emissions calculation assumes no emissions from compressor seals which are required by BACT to be vented to a vapor control system. The APCD assumes that a leak detection program around the compressors will be part of the I&M program to insure that the vent system is operating properly and that no emissions from the compressors are occurring.

Repair Requirements

n. Repair requirements follow NSPS requirements.

o. It is assumed that spare parts and maintenance personnel are available when necessary for repair.

p. Emissions reduction credit will not be applicable to leaking components that are not repaired within the requirements of this program. For repairs made at process turnarounds, emissions reduction credit will be based on the statistical frequency of process turnarounds or shutdowns.

Record Keeping and Reporting Requirements

q. Record keeping and reporting requirements follow the most stringent of NSPS requirements.

Component Accessibility

r. Credit will be adjusted consistent with NSPS as stated in 40 CFR Part 60

Table 4.4 Rule 331 BACT Requirements

Tag No.	Component Type	Component Location	Plant/P&ID	BACT Install Date	BACT Performance Standard
RK-6191	Flange	6" 300 series junior orifice fitting (FE-2501) on the fuel gas system to the Gas Turbine Generator in the CPP, which operates at a pressure of 285 psig and temp of 155 degrees F.	CPP X-	2/1/1999	100 ppmv[1]
RK-6205	Flange	Flange downstream of orifice plate on fuel gas line to gas turbine generator. Gasket rated at 150% of actual process pressure at process temperature.	CPP X-	2/1/1999	100 ppmv[1]
RK-6191	Other	Jr. Orifice fitting On FE 2501-1 fuel gas line (6") to cogeneration unit. Gasket rated at 150% of actual process pressure at process temperature.	CPP X-5	4/4/1994	1000 ppmv[1]
RK-6228	Other	6" flange set on fuel gas line to cogen unit in small compartment east of flow valve compartment	CPP X-5	4/4/1994	100 ppmv
KW-4669	Other	12" spectacle flange on condensate stabilizer MBA-1133. Gasket rated at 150% of actual process pressure at process temperature.	OTP X-34	3/14/1995	100 ppmv[1]
RK-1770	Other	3/4" Threaded Pipe Connection at coupling at deethanizer (MBA-4112) lower level gauge. Gasket rated at 150% of actual process pressure at process temperature.	SGTP X-28	5/2/1995	100 ppmv[1]
RK-4725	Other	Threaded connection on Flow Element 10212. Outlet gas from condensate gas stabilizer reflux drum (MBD-134).	OTP X-35	2/12/1996	1000 ppmv[1]
KW-322	Other	1" plug on finfan HAL 4255 at SGTP. Gasket rated at 150% of actual process pressure at process temperature	SGTP X-49B	8/19/1996	100 ppmv[1]
KW-322	Other	1" plug on finfan HAL 4255 at SGTP. Gasket rated at 150% of actual process pressure at process temperature.	SGTP X-49B		1000 ppmv[1]
RK-4725	Other	1/4" - 3/8" threaded nipple on Peco senior orifice meter on the outlet gas line from the Condensate Stabilizer Reflux Drum (MBD-134). (Flow element 10212) Gasket rated at 150% of actual process pressure at process temperature	OTP X-35		100 ppmv[1]
RK-6228	Other	4" flange set on fuel gas line to cogen unit in small compartment east of flow valve compartment. Gasket rated at 150% of actual process pressure at process temperature.	CPP X-5		1000 ppmv[1]
RK-6214	Valve	Flow valve - threaded connection on plug on inlet side. Also leaking on inlet flange	CPP X-5	4/4/1994	100 ppmv

Tag No.	Component Type	Component Location	Plant/P&ID	BACT Install Date	BACT Performance Standard
RK-2028	Valve	1/2" needle valve in gas service on 3/8" tubing line from methanol injection line that feeds into the 6" line from the platform gas flash separator MBD-4102 to refrigerant subcooler HBG-4250. Design conditions: 345 psig @ 18 deg F. Low Emission Valve design	SGTP X-25	2/6/1998	100 ppmv[1]
RK-6214	Valve	Valve stem packing of gas turbine generator (ZAN-2501) speed control valve	CPP X-5	2/7/2000	100 ppmv

NOTES:

1. Monitored per EPA Reference Method 21. Std as methane above ambient.

Table 4.5 Source Testing Requirements for the Cogeneration Facility

Location Number	Test Location	Parameter Monitored	Test Method [1]
1	Exhaust Stack [3]	NO_x; O_2	CARB Method 100
		CO; CO_2	CARB Method 100; EPA Method 3
		NH_3	BAAQMD St-1B [2]
		ROC; THC	EPA Method 18
		PM; PM_{10} [5]	EPA Methods 1, 2, 5
		Flow Rate	EPA Method 2
		Moisture	EPA Method 4
2	SCR Inlet	NO_x; O_2	CARB 100
		Flow Rate	EPA Method 2
		Temperature	EPA Method 2
3	Bypass Stack [6]	NO_x; O_2	CARB 100
		Temperature	EPA Method 2
		Flow Rate, Moisture, CO	EPA Method 2
4	Turbine Fuel Feed	Flow Rate	Process Flow Meter
5	Turbine Steam Injection	Flow Rate	Process Flow Meter
6	HRSG Fuel Feed	Flow Rate	Process Flow Meter
7	Cogeneration Plant Turbines	Electrical Output	Plant Meters
8	Waste Heat Recovery Unit	Steam Production Rate	Process Flow Meter
9	Ammonia Injection Point	NH_3 Feed Rate	Process Flow Meter
--	Facility	Ambient Temperature	n/a
		Barometric Pressure	n/a
		Relative Humidity	n/a

NOTES:

1. Equivalent source test methods may be used if approved by the APCD.
2. EPA or CARB methods are not available. The method used is subject to APCD approval.
3. Source testing shall be performed annually, except for particulate matter (PM and PM_{10}), for which testing is required on a triennial basis.
4. Source testing shall be performed at or near maximum load conditions unless otherwise directed by the APCD.
5. For compliance purposes, ExxonMobil may choose to assume that all PM is equal to PM_{10}.
6. Bypass stack testing to be performed when requested by the APCD.

Table 4.6 Source Testing Requirements for the Stripping Gas Treating Plant

Location Number	Test Location	Parameter Monitored	Test Method [1]
1	Incinerator Exhaust [5]	NO_x; O_2	CARB Method 100
		SO_2	EPA Method 6 or CARB 100
		CO; CO_2	CARB Method 100; EPA Method 3
		NH_3	BAAQMD St-1B [2]
		H_2S; TRS	EPA Method 16 or 16A
		ROC; THC	EPA Method 18 or 25A
		PM; PM_{10} [6]	EPA Methods 1, 2, 5
		Temperature	EPA Method 2
		Flow Rate	EPA Method 2
		% Moisture	EPA Method 4
2	Inlet Gas - Platform Gas	Flow Rate	Process Flow Meter
	- Stripping Gas	Flow Rate	Process Flow Meter
3	Assist Gas Feed to Incinerator	Flow Rate	Process Flow Meter
4	Sweet Gas from Amine Unit	H_2S	EPA Method 11
5	Sulfur Production	Rate	Tank Gauging
6	Tail Gas Feed to Incinerator	H_2S	APCD-approved methods [2]
7	Acid Gas to Sulfur Recovery	H_2S	APCD-approved methods [2]

NOTES:

1. Equivalent source test methods may be used if approved by the APCD.

2. EPA or CARB methods are not available. The method used is subject to APCD approval.

3. Source testing shall be performed annually, except for particulate matter (PM and PM_{10}), for which testing is required on a triennial basis.

4. Source testing shall be performed at or near maximum load conditions unless otherwise directed by the APCD.

5. ExxonMobil shall also test for thermal De-NOx efficiency

6. For compliance purposes, ExxonMobil may choose to assume that all PM is equal to PM_{10}.

Table 4.7 Source Testing Requirements for the Equalization Tank

Location Number	Test Location	Parameter Monitored	Test Method [1]
1	Inlet to Venturi Caustic Scrubber	H_2S; TRS	EPA Method 16 or 16A
		ROC; THC	EPA Method 18 or 25A
		Temperature	EPA Method 2
		Flow Rate	EPA Method 2
		% Moisture	EPA Method 4
2	Outlet from Venturi Scrubber	H2S; TRS	EPA Method 16 or 16A
		ROC; THC	EPA Method 18 or 25A
		Temperature	EPA Method 2
		Flow Rate	EPA Method 2
3	Outlet from Carbon Canister	ROC; THC	EPA Method 18 or 25A
		Temperature	EPA Method 2
		Flow Rate	EPA Method 2
4	Venturi Scrubber	Caustic Circulation Rate	Process Meter
		Caustic pH	ASTM-approved

NOTES:

1. Equivalent source test methods may be used if approved by the APCD.

2. Source testing shall be performed annually.

3. Source testing shall be performed at or near maximum load conditions unless otherwise directed by the APCD.

Table 4.8 Requirements for Operational and Regional Monitoring

Parameters to be Monitored	Nojoqui Pass [1]	Carpinteria [2]	El Capitan [1]	LFC1 [3]
$NO_x/NO/NO_2$	X	X	X	X
Ozone	X	X	X	X
PM_{10}				X [4]
H_2S				
SO_2				X
THC				X
CO				X
WS Avg.	X	X	X	X
WD Avg.	X	X	X	X
WS Resultant	X	X	X	X
WD Resultant	X	X	X	X
Sigma V				
Sigma Phi				
Sigma Theta	X	X	X	X
Int Temp.	X	X	X	X
Ext Temp.	X	X	X	X

NOTES:

1. Currently operated by APCD
2. Currently operated by Arguello, Inc.
3. Currently operated by ExxonMobil
4. Co-located PM_{10} site.

Table 4.9 Requirements for Odor Monitoring

Parameters to be Monitored	LFC Odor [1]
H_2S	X
TRS	
WS Avg.	X
WD Avg.	X
WS Result	X
WD Result	X
Sigma Theta	X
Int Temp.	X
Ext. Temp.	X

NOTES:

1. This station shall be located at the property boundary.

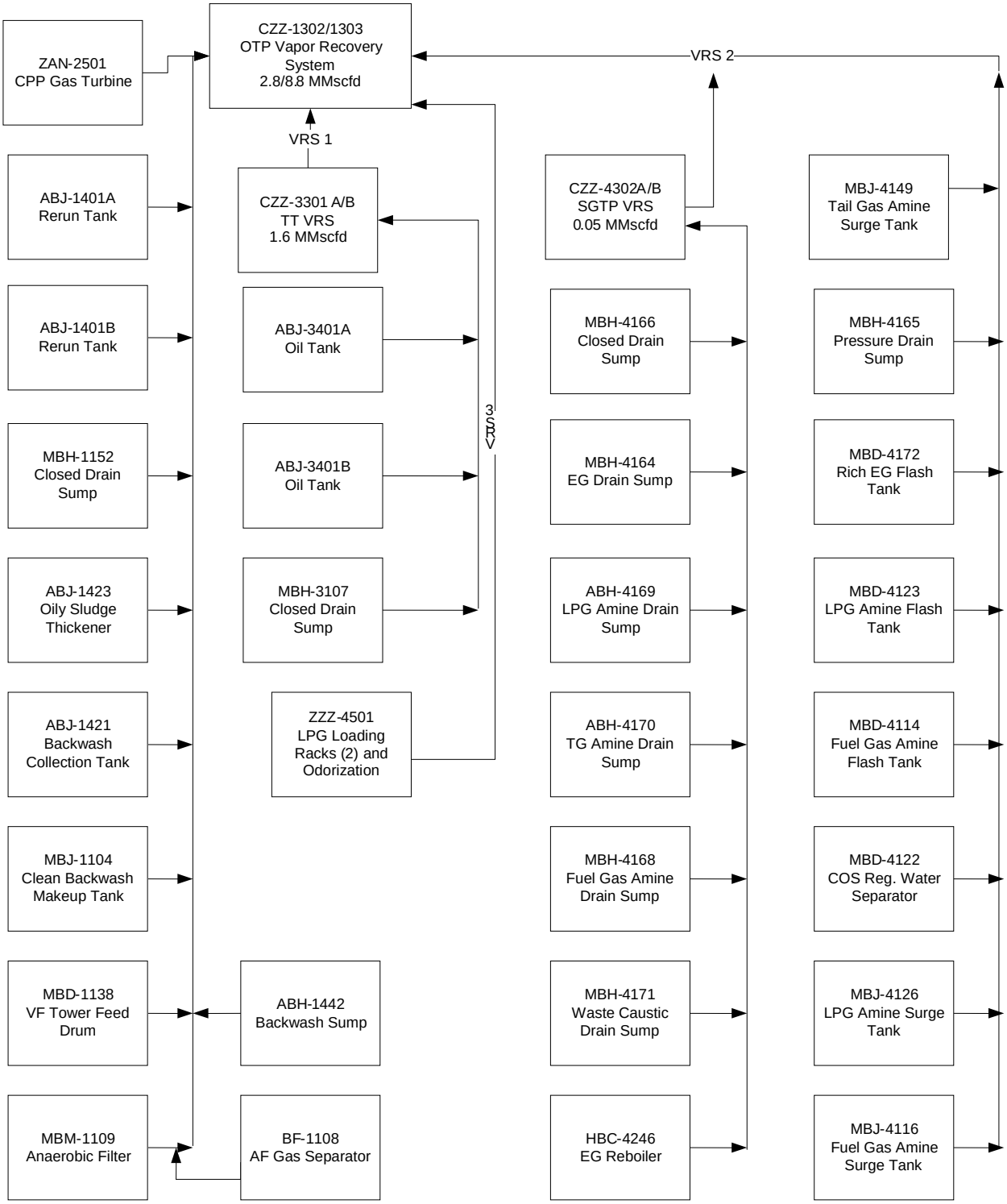

Figure 4.2 Las Flores Canyon VRS Block Diagram

-- This page left blank intentionally --

5.0 Emissions

5.1. General

Emissions calculations are divided into "permitted", "exempt" and “entire source emissions (ESE)” categories. Permit exempt equipment is determined by APCD Rule 202. ESE emissions are the sum of all SYU Expansion Project emissions of ozone precursor (NO_x and ROC) pollutant. The permitted emissions for each emission unit are based on the equipment's potential-to-emit (as defined by Rule 102). Section 5.2 details the permitted emissions for each emissions unit. Section 5.3 details the overall permitted emissions for the facility based on reasonable worst-case scenarios using the potential-to-emit for each emissions unit. Section 5.4 provides the federal potential to emit calculation using the definition of potential to emit used in Rule 1301. Section 5.5 provides the estimated HAP emissions from the LFC facility. Section 5.6 provides the estimated emissions from permit exempt. Section 5.7 details the ESE emissions for the stationary source. Section 5.8 provides the net emissions increase calculation for the facility and the stationary source. In order to accurately track the emissions from a facility, the APCD uses a computer database.

5.2. Permitted Emission Limits – Emission Units

Each emissions unit associated with the facility was analyzed to determine the potential-to-emit for the following pollutants:

- Nitrogen Oxides (NO_x) [7]
- Reactive Organic Compounds (ROC)
- Carbon Monoxide (CO)
- Sulfur Oxides (SO_x) [8]
- Particulate Matter (PM) [9]
- Particulate Matter smaller than 10 microns (PM_{10})

Permitted emissions are calculated for both short term (hourly and daily) and long term (quarterly and annual) time periods. Section 4.0 (Engineering Analysis) provides a general discussion of the basic calculation methodologies and emission factors used. The reference documentation for the specific emission calculations, as well as detailed calculation spreadsheets, may be found in Section 4 and Attachment 10.2. Table 5.1 provides the basic operating characteristics. Table 5.2 provides the specific emission factors. The SO_x emission factors from the Waste Gas Incinerator are found in Tables 10.14, all emission factors for the Thermal Oxidizer are found in Tables 10.8 through 10.11, the Oil Storage Tanks, the Rerun Tanks and the Demulsifier Tank are found in Tables 10.15 through 10.17. Tables 5.3 and 5.4 show the permitted short-term and permitted long-term emissions for each unit or operation. In the table, the last column indicates whether the emission limits are federally enforceable. Those emissions limits that are federally enforceable are indicated by the symbol “FE”. Those emissions limits that are APCD-only enforceable are indicated by the symbol “A”. Emissions data that are shown for informational purposes only are not enforceable (APCD or federal) and are indicated by the symbol “NE”.

---

[7] Calculated and reported as nitrogen dioxide (NO_2)

[8] Calculated and reported as sulfur dioxide (SO_2)

[9] Calculated and reported as all particulate matter smaller than 100 μm

5.3. Permitted Emission Limits – Facility Totals

The total potential-to-emit for all emission units associated with the facility was analyzed. This analysis looked at the reasonable worst-case operating scenarios for each operating period. The equipment operating in each of the scenarios are presented below. Unless otherwise specified, the operating characteristics defined in Table 5.1 for each emission unit are assumed. Table 5.5 shows the total permitted emissions for the facility.

Hourly/Daily Scenario:

- CPP Hourly: Startup/Shutdown Mode (NOx, ROC, CO), CPP Normal Operations Mode (SOx, PM, PM10)
- CPP Daily: CPP Normal Operations Mode
- Waste Gas Incinerator (Startup/Shutdown/Maintenance Mode)
- Thermal Oxidizer (Planned Continuous and Pilot/Purge)
- Crew Boats (Spot Charter and auxiliary engines)
- Supply Boats (Spot Charter and auxiliary engines)
- Pigging Equipment
- Tanks/Sumps/Separators (1 Oil Storage Tank and 1 Rerun Tank)
- Solvent Use (hourly based on daily emissions across a maximum of 8 hours)
- Fugitives
- Compressor Vents
- Floodwater Pump Engine
- Firewater Pump Engines

Quarterly and Annual Scenario:

- CPP Startup/Shutdown Mode, CPP Normal Operations Mode, HRSG Only Mode
- Waste Gas Incinerator (w/Merox Vent)
- Thermal Oxidizer (All Flaring Scenarios)
- Crew Boats (Main Boat, Spot Charter and auxiliary engines)
- Supply Boats (Main Boat, Spot Charter and auxiliary engines)
- Pigging Equipment
- Tanks/Sumps/Separators (1 Oil Storage Tank and 1 Rerun Tank)
- Solvent Use
- Fugitives
- Compressor Vents
- Floodwater Pump Engine
- Firewater Pump Engines

5.4. Part 70: Federal Potential to Emit for the Facility

Table 5.6 lists the federal Part 70 potential to emit. Being a NSR source, all project emissions, except fugitive emissions that are not subject to any applicable NSPS or NESHAP requirement, are counted in the federal definition of potential to emit. For the LFC facility, fugitives from equipment subject to NSPS KKK, Kb, GG and LLL are included in the federal PTE. For ease of processing, ExxonMobil has agreed to accept the assumption that all fugitives from the LFC facility are part of the federal PTE.

5.5. Part 70: Hazardous Air Pollutant Emissions for the Facility

Total emissions of hazardous air pollutants (HAP) are computed for informational purposes only. HAP emission factors are shown in Table 5.7. Potential annual HAP emissions, based on the worst-case scenario listed in Section 5.3 above, are shown in Table 5.8.

5.6. Exempt Emission Sources/Part 70 Insignificant Emissions

Equipment/activities exempt pursuant to Rule 202 include maintenance operations involving surface coating. Insignificant emission units are defined under APCD Rule 1301 as any regulated air pollutant emitted from the unit, excluding HAPs, that are less than 2 tons per year based on the unit's potential to emit and any HAP regulated under section 112(g) of the Clean Air Act that does not exceed 0.5 ton per year based on the unit's potential to emit. The following emission units are exempt from permit per Rule 202, but are not considered insignificant emission units, since these exceed the insignificant emissions threshold.

Table 5.9 presents the estimated annual emissions from these exempt equipment items, including those exempt items not considered insignificant. This permit includes the Solvents/Surface coating activities during maintenance operations.

5.7. Entire Source Emissions (ESE)

ExxonMobil is required to mitigate all ozone precursor emissions (NO_x and ROC) from emission units associated with the Santa Ynez Expansion Project [10]. The ESE is calculated based on the following:

- Las Flores Canyon Permitted Emissions
- Las Flores Canyon Phase III Oil and Phase III Wastewater
- Las Flores Canyon Exempt Emissions
- Platform Harmony Permitted Emissions
- Platform Harmony Exempt Emissions
- Platform Heritage Permitted Emissions
- Platform Heritage Exempt Emissions

5.8. Net Emissions Increase Calculation

The net emissions increase (NEI) for LFC is equal to the existing facility NEI plus the emissions increase ("I") due to ATC/PTO 13039, which added various components originally installed under the de minimis exemption to the permit. This facility's contribution to the stationary source's net emissions increase since November 15, 1990 (the day the federal Clean Air Act Amendments were adopted) is based on the NSR permit actions since December 5, 1991 and is stated in Table 5.10. The NEI for the Exxon – SYU stationary source is found in Table 10.20.

[10] Platform Hondo and the POPCO gas plant emissions are not included in ESE emissions as they were not part of the SYU Expansion Project.

-- This page left blank intentionally --

Table 5.1 Operating Equipment Description

Equipment Item	Description			Device Specifications					Usage Data			Maximum Operating Schedule			
		Exxon ID #	APCD DeviceNo	Fuel	HHV	%S	Size	Units	Capacity	Units	Load	hr	day	qtr	year
Combustion - Cogen Power Plant: Normal Operations Mode															
	Gas Turbine 38.63 MW	ZAN-2501	6585	NG	24	ppmv S	465.000	MMBtu/hr	460.350	MMBtu/hr	0.99	1	24	2,184	8,742
	Heat Recovery Steam Generator	EAL-2601	7865	NG	24	ppmv S	345.000	MMBtu/hr	140.140	MMBtu/hr	0.41	1	24	2,184	8,742
	Turbine Bypass Stack	ZAN-2501	7864	NG	24	ppmv S	1.0%	of Turb Exh	4.650	MMBtu/hr	0.01	1	24	2,184	8,742
Combustion - Cogen Power Plant: HRSG Only Mode															
	Heat Recovery Steam Generator	EAL-2601	7865	NG	24	ppmv S	345.000	MMBtu/hr	345.000	MMBtu/hr	1.000	1	24	2,184	8,742
Combustion - Cogen Power Plant: Planned Startup/Shutdown Mode															
	Combined CPP + Bypass Stacks (22 MW)	ZAN-2501/ EAL-2601	7866	NG	24	ppmv S	100%	of Turb Exh	308.821	MMBtu/hr	0.66	1	2	6	18
SGTP - Incinerator															
	TGCU/Merox Vent Incinerator	EAL-4602	7867	TG/NG	--	--	12.320	MMBtu/hr	134.05	kscfh	--	1	24	2,190	8,760
	TGCU Incinerator (w/out Merox vent)	EAL-4603	7868	TG/NG	--	--	12.020	MMBtu/hr	133.68	kscfh	--	1	24	2,190	8,760
	Planned Startup/Shutdown/Maintenance	EAL-4603	7869	TG/NG	--	--	12.320	MMBtu/hr	--	--	--	1	24	84	84
Combustion - Thermal Oxidizer															
	Purge and Pilot	EAW-1601	102738	NG	24	ppmv S	1,200	Btu/scf	4.00	kscfh		1	24	2,190	8,760
	Planned - Continuous LP	EAW-1601	102739	NG	500	ppmv S	1,200	Btu/scf	1.414	kscfh		1	24	2,190	8,760
	Planned - Continuous AG	EAW-1601	102740	NG	239	ppmv S	1,153	Btu/scf	0.245	kscfh		1	24	2,190	8,760
	Planned - Other	EAW-1601	102741	NG, SG	varies	ppmv S	36' x 115'	Dia x Ht					varies		
	Unplanned - Other	EAW-1601	102742	SG, AG	varies	ppmv S	36' x 115'	Dia x Ht					varies		
Combustion - Internal Combustion Engine															
	Floodwater Pump	LFC-07	8122	D2	0.0015	wt% S	230.000	bhp	1.633	MMBtu/hr		0.5	0.5	6.5	20
	Firewater Pump A	PBE-1396 A	1085	D2	0.0015	wt% S	238.000	bhp	1.690	MMBtu/hr		0.5	0.5	6.5	26
	Firewater Pump B	PBE-1396 B	1086	D2	0.0015	wt% S	238.000	bhp	1.690	MMBtu/hr		0.5	0.5	6.5	26
Crew Boat - Harmony/Heritage															
	Main Engine - DPV	Offshore (w/in 3-miles)	6515	D2	0.0015	wt % S	3,860	bhp-total	0.055	gal/bhp-hr	0.85	1	6	44	177
	Main Engine - DPV Broadbill	Offshore (w/in 3-miles)	107946	D2	0.0015	wt % S	2,400	bhp-total	0.055	gal/bhp-hr	0.85	1	6	47	189
	Main Engine - Spot Charter	Offshore (w/in 3-miles)	6564	D2	0.0015	wt % S	3,860	bhp-total	0.055	gal/bhp-hr	0.85	1	6	7	29
	Auxilliary Engine - DPV	Offshore (w/in 3-miles)	6516	D2	0.0015	wt % S	262	bhp-total	0.055	gal/bhp-hr	0.50	1	6	208	833
	Auxiliary Engine - DPV Broadbill	Offshore (w/in 3-miles)	107947	D2	0.0015	wt % S	124	bhp-total	0.055	gal/bhp-hr	0.50	1	6	293	1,174

Equipment Item	Description			Device Specifications					Usage Data			Maximum Operating Schedule			
		Exxon ID #	APCD DeviceNo	Fuel	HHV	%S	Size	Units	Capacity	Units	Load	hr	day	qtr	year
Supply Boat - Harmony/Heritage															
	Main Engine - DPV	Offshore (w/in 3-miles)	6513	D2	0.0015	wt % S	4,000	bhp-total	0.055	gal/bhp-hr	0.65	1	1	42	42
	Main Engine - Spot Charter	Offshore (w/in 3-miles)	7883	D2	0.0015	wt % S	4,000	bhp-total	0.055	gal/bhp-hr	0.65	1	1	4	4
	Generator Engine - DPV	Offshore (w/in 3-miles)	6514	D2	0.0015	wt % S	400	bhp-total	0.055	gal/bhp-hr	0.50	1	24	120	120
	Bow Thruster - DPV	Offshore (w/in 3-miles)	7884	D2	0.0015	wt % S	500	bhp-total	0.055	gal/bhp-hr	1.00	1	2	14	14
	Winch - DPV	Offshore (w/in 3-miles)	103247	D2	0.0015	wt % S	409	bhp-total	0.055	gal/bhp-hr	1.00	1	2	14	14
Compressor Vent															
	SOV Distance Piece Vent	CZZ-1301	7881	--	--	--	--	--	--	--	--	1	24	2,190	8,760
	VRU Distance Piece Vent	CZZ-1302/1303	7882	--	--	--	--	--	--	--	--	1	24	2,190	8,760
Pigging Equipment															
	Emulsion Pig Receiver	TT	6565	-	1	psig	25 L x 2 D	feet	78.5	ft^3	-	1	4	24	96
Tanks/Sumps/Separators															
	Oil Storage Tank A (vrs1)	ABJ-3401A	6566	-	254,591	bbl	200 D x 56 H	feet	140,000	bopd	-	1	24	2,190	8,760
	Oil Storage Tank B (vrs1)	ABJ-3401B	6567	-	254,591	bbl	200 D x 56 H	feet	140,000	bopd	-	1	24	2,190	8,760
	Area Drain Oil/Water Separator (cc)	ABH-3402	6572	-	ter. ho	-	9 D x 17 H	feet	64	ft^2	-	1	24	2,190	8,760
	Area Drain Sump	ABH-3403	6580	-	ter. ho	-	17 L x 9.5 W	feet	162	ft^2	-	1	24	2,190	8,760
	Rerun Tank A (vrs)	ABJ-1401A	6570	-	30,000	bbl	70 D x 48 H	feet	140,000	bbl/d	-	1	24	2,190	8,760
	Rerun Tank B (vrs)	ABJ-1401B	6571	-	30,000	bbl	70 D x 48 H	feet	140,000	bbl/d	-	1	24	2,190	8,760
	Equalization Tank 1424 (vent scbr/cc)	ABJ-1424	6573	-	ter. ho	-	70 D x 48 H	feet	3,848	ft^2	-	1	24	2,190	8,760
	Demulsifier Tank	ABJ-1402	6583	-	300	bbl	12 D x 19 H	feet	55	bopd	-	1	24	2,190	8,760
	Oily Sludge Thickener (vrs)	ABJ-1423	6574	-	ter. ho	-	48 D x 20 H	feet	1,809	ft^2		1	24	2,190	8,760
	Backwash Sump (vrs)	ABH-1442	6575	-	ter. ho	-	13 D x 24 L	feet	312	ft^2		1	24	2,190	8,760
	Backwash Collection Tank (vrs)	ABH-1421	7885	-	ter. ho	-	12 D x 28 L	feet	113	ft^2		1	24	2,190	8,760
	Open Drain Sump (cc)	ABH-1413	6576	-	ter. ho	-	8 D x 15 H	feet	59	ft^2	-	1	24	2,190	8,760
	Area Drain Sump	ABH-1414	6581	-	ter. ho	-	48 L x 22 W	feet	1,056	ft^2	-	1	24	2,190	8,760
	Area Drain Oil/Water Separator (cc)	ABH-1415	6577	-	ter. ho	-	12 D x 19 H	feet	113	ft^2	-	1	24	2,190	8,760
	Area Drain Sump	ABH-4405	6582	-	ter. ho	-	17 L x 6 W	feet	102	ft^2	-	1	24	2,190	8,760
	Area Drain Oil/Water Separator (cc)	ABH-4406	6578	-	ter. ho	-	9 D x 10 L	feet	64	ft^2	-	1	24	2,190	8,760
	Open Drain Sump (cc)	ABH-4407	6579	-	ter. ho	-	3 D x 12 L	feet	7	ft^2	-	1	24	2,190	8,760
	Chemical Storage Tote Tanks	Various	7886	-	-	-	various	gal	various	gal	-	1	24	2,190	8,760

Equipment Item	Description			Device Specifications					Usage Data			Maximum Operating Schedule			
		Exxon ID #	APCD DeviceNo	Fuel	HHV	%S	Size	Units	Capacity	Units	Load	hr	day	qtr	year
Fugitive Components - Gas															
Valve	Accessible		1097	--	--	--	19	comp-lp	--	--		1	24	2,190	8,760
Valve	Inaccessible		1098	--	--	--	29	comp-lp	--	--		1	24	2,190	8,760
Valve	Unsafe		7870	--	--	--	48	comp-lp	--	--		1	24	2,190	8,760
Valve	Bellows / Background ppmv		6551	--	--	--	1,744	comp-lp	--	--		1	24	2,190	8,760
Valve	Category A		6474	--	--	--	50	comp-lp	--	--		1	24	2,190	8,760
Valve	Category B		7872	--	--	--	187	comp-lp	--	--		1	24	2,190	8,760
Valve	Category C		104929	--	--	--	77	comp-lp	--	--		1	24	2,190	8,760
Valve	Category E		104926	--	--	--	567	comp-lp	--	--		1	24	2,190	8,760
Valve	Category F		9710	--	--	--	13	comp-lp	--	--		1	24	2,190	8,760
Valve	Category H		1099	--	--	--	532	comp-lp	--	--		1	24	2,190	8,760
Valve	Category H (Inaccessible)		1100	--	--	--	37	comp-lp	--	--		1	24	2,190	8,760
Valve	Category I		6475	--	--	--	435	comp-lp	--	--		1	24	2,190	8,760
Connection	Accessible/Inaccessible		1101	--	--	--	9,678	comp-lp	--	--		1	24	2,190	8,761
Connection	Unsafe		6568	--	--	--	463	comp-lp	--	--		1	24	2,190	8,760
Connection	Category B		7874	--	--	--	11,100	comp-lp	--	--		1	24	2,190	8,760
Connection	Category C		104928	--	--	--	185	comp-lp	--	--		1	24	2,190	8,760
Connection	Category E		104925	--	--	--	1,719	comp-lp	--	--		1	24	2,190	8,760
Connection	Category F		9709	--	--	--	55	comp-lp	--	--		1	24	2,190	8,760
Compressor Seal	To VRS		6555	--	--	--	26	comp-lp	--	--		1	24	2,190	8,760
	Exempt		6557	--	--	--	5,018	comp-lp	--	--		1	24	2,190	8,760
						sub-total =	31,982	comp-lp							
Fugitive Components - Oil															
Valve	Accessible		1092	--	--	--	266	comp-lp	--	--		1	24	2,190	8,760
Valve	Inaccessible		1093	--	--	--	6	comp-lp	--	--		1	24	2,190	8,760
Valve	Bellows / Background ppmv		6558	--	--	--	708	comp-lp	--	--		1	24	2,190	8,760
Valve	Category B		7877	--	--	--	2	comp-lp	--	--		1	24	2,190	8,760
Valve	Category H		1094	--	--	--	478	comp-lp	--	--		1	24	2,190	8,760
Valve	Category H (Inaccessible)		5967	--	--	--	18	comp-lp	--	--		1	24	2,190	8,760
Connection	Accessible/Inaccessible		1095	--	--	--	6,669	comp-lp	--	--		1	24	2,190	8,760
Connection	Unsafe		7880	--	--	--	1	comp-lp	--	--		1	24	2,191	8,762
Connection	Category B		1096	--	--	--	108	comp-lp	--	--		1	24	2,190	8,760
Connection	Category F		9711	--	--	--	2	comp-lp	--	--		1	24	2,190	8,760
Pump Seal	Single		7879	--	--	--	4	comp-lp	--	--		1	24	2,190	8,760
Pump Seal	Dual/Tandem		6561	--	--	--	45	comp-lp	--	--		1	24	2,190	8,760
	Exempt		6563	--	--	--	1,761	comp-lp	--	--		1	24	2,190	8,760
						sub-total =	10,068	comp-lp							
Solvent Usage															
	Cleaning/Degreasing		5740	-	-	-	various	lb/gal	various	gal	-	1	24	2,190	8,760

Table 5.2 Equipment Emission Factors

Equipment Item	Description			Emission Factors							
		Exxon ID #	APCD DeviceNo	NOx	ROC	CO	SOx	PM	PM10	Units	
Combustion - Cogen Power Plant: Normal Operations Mode											
	Gas Turbine 38.63 MW	CPP/ZAN-2501	6585	0.0272	0.0055	0.0260	0.0034	0.0158	0.0126	lb/MMBtu	
	Heat Recovery Steam Generator	CPP/EAL-2601	7865	0.0272	0.0055	0.0260	0.0034	0.0158	0.0126	lb/MMBtu	
	Turbine Bypass Stack	CPP/ZAN-2501	7864	0.0272	0.0055	0.0260	0.0034	0.0158	0.0126	lb/MMBtu	
Combustion - Cogen Power Plant: HRSG Only Mode											
	Heat Recovery Steam Generator	CPP/EAL-2601	7865	0.0300	0.0095	0.2970	0.0034	0.0050	0.0040	lb/MMBtu	
Combustion - Cogen Power Plant: Planned Startup/Shutdown Mode											
	Combined CPP + Bypass Stacks (22 MW)	CPP/ZAN-2501/EAL-2601	7866	0.2910	0.0953	0.5920	0.0034	0.0279	0.0223	lb/MMBtu	
SGTP - Incinerator											
	TGCU/Merox Vent Incinerator	SGTP/EAL-4603	7867	0.114	0.0038	0.092	See Table 10.14	0.078	0.0624	lb/MMBtu	
	TGCU Incinerator (w/out Merox vent)	SGTP/EAL-4603	7868	0.114	0.0038	0.092		0.078	0.0624	lb/MMBtu	
	Planned Startup/Shutdown/Maintenance	SGTP/EAL-4603	7869	0.114	0.0038	0.092		0.078	0.0624	lb/MMBtu	
Combustion - Thermal Oxidizer											
	Purge and Pilot	OTP/EAW-1601	102738	See Table 10.9						lb/MMBtu	
	Planned - Continuous LP	OTP/EAW-1601	102739							lb/MMBtu	
	Planned - Continuous AG	OTP/EAW-1601	102740							lb/MMBtu	
	Planned - Other	OTP/EAW-1601	102741							lb/MMBtu	
	Unplanned - Other	OTP/EAW-1601	102742							lb/MMBtu	
Combustion - Internal Combustion Engine											
	Floodwater Pump	LFC-07	8122	14.061	1.120	3.030	0.006	1.000	1.000	g/bhp-hr	
	Firewater Pump A	PBE-1396 A	1085	14.061	1.120	3.030	0.006	1.000	1.000	g/bhp-hr	
	Firewater Pump B	PBE-1396 B	1086	14.061	1.120	3.030	0.006	1.000	1.000	g/bhp-hr	
Crew Boat - Harmony/Heritage											
	Main Engine - DPV	Offshore (w/in 3-miles)	6515	337.00	17.10	80.90	0.21	33.00	31.68	lb/1000 gal	1
	Main Engine - DPV Broadbill	Offshore (w/in 3-miles)	107946	218.98	17.10	80.90	0.21	5.93	5.93	lb/1000 gal	1
	Main Engine - Spot Charter	Offshore (w/in 3-miles)	6564	561.00	17.10	80.90	0.21	33.00	31.68	lb/1000 gal	2
	Auxilliary Engine - DPV	Offshore (w/in 3-miles)	6516	600.00	49.00	129.30	0.21	42.20	40.51	lb/1000 gal	
	Auxiliary Engine - DPV Broadbill	Offshore (w/in 3-miles)	107947	217.87	48.98	129.26	0.21	5.93	5.93	lb/1000 gal	

Equipment Item	Description			Emission Factors						
		Exxon ID #	APCD DeviceNo	NOx	ROC	CO	SOx	PM	PM10	Units
Supply Boat - Harmony/Heritage										
	Main Engine - DPV	Offshore (w/in 3-miles)	6513	337	16.8	78.3	0.21	33	31.7	lb/1000 gal
	Main Engine - Spot Charter	Offshore (w/in 3-miles)	7883	561	16.8	78.3	0.21	33	31.7	lb/1000 gal
	Generator Engine - DPV	Offshore (w/in 3-miles)	6514	600	49.0	129.3	0.21	42.2	40.5	lb/1000 gal
	Bow Thruster - DPV	Offshore (w/in 3-miles)	7884	600	49.0	129.3	0.21	42.2	40.5	lb/1000 gal
	Winch - DPV	Offshore (w/in 3-miles)	103247	600	49.0	129.3	0.21	42.2	40.5	lb/1000 gal
Compressor Vent										
	SOV Distance Piece Vent	OTP/CZZ-1301	7881	-	0.10	-	-	-		lb/hr
	VRU Distance Piece Vent	OTP/CZZ-1302/1303	7882	-	0.10	-	-	-		lb/hr
Pigging Equipment										
	Emulsion Pig Receiver	TT	6565	-	0.0076	-	-	-	-	lb/acf-event
Tanks/Sumps/Separators										
	Oil Storage Tank A (vrs1)	TT/ABJ-3401A	6566	See Table 10.17						
	Oil Storage Tank B (vrs1)	TT/ABJ-3401B	6567							
	Area Drain Oil/Water Separator (cc)	TT/ABH-3402	6572	-	0.0015	-	-	-	-	lb/ft^{2}day
	Area Drain Sump	TT/ABH-3403	6580	-	0.0058	-	-	-	-	lb/ft^{2}day
	Rerun Tank A (vrs)	OTP/ABJ-1401A	6570	See Table 10.15						
	Rerun Tank B (vrs)	OTP/ABJ-1401B	6571							
	Equalization Tank 1424 (vent scbr/cc)	OTP/ABJ-1424	6573	-	0.0015	-	-	-	-	lb/ft^{2}day
	Demulsifier Tank	OTP/ABJ-1402	6583	See Table 10.16						
	Oily Sludge Thickener (vrs)	OTP/ABJ-1423	6574	-	0.0003	-	-	-	-	
	Backwash Sump (vrs)	OTP/ABH-1442	6575	-	0.0003	-	-	-	-	lb/ft^{2}day
	Backwash Collection Tank (vrs)	OTP/ABH-1421	7885	-	0.0003	-	-	-	-	lb/ft^{2}day
	Open Drain Sump (cc)	OTP/ABH-1413	6576	-	0.0015	-	-	-	-	lb/ft^{2}day
	Area Drain Sump	OTP/ABH-1414	6581	-	0.0058	-	-	-	-	lb/ft^{2}day
	Area Drain Oil/Water Separator (cc)	OTP/ABH-1415	6577	-	0.0015	-	-	-	-	lb/ft^{2}day
	Area Drain Sump	SGTP/ABH-4405	6582	-	0.0058	-	-	-	-	lb/ft^{2}day
	Area Drain Oil/Water Separator (cc)	SGTP/ABH-4406	6578	-	0.0015	-	-	-	-	lb/ft^{2}day
	Open Drain Sump (cc)	SGTP/ABH-4407	6579	-	0.0015	-	-	-	-	lb/ft^{2}day
	Chemical Storage Tote Tanks	Various	7886	-	0.1000	-	-	-	-	tons/year

Equipment Item	Description			Emission Factors						
		Exxon ID #	APCD DeviceNo	NOx	ROC	CO	SOx	PM	PM10	Units
Fugitive Components - Gas										
Valve	Accessible	OTP/CPP/SGTP/TT	1097	--	0.0804	--	--	--	--	lb/day-clp
Valve	Inaccessible	OTP/CPP/SGTP/TT	1098	--	0.0804	--	--	--	--	lb/day-clp
Valve	Unsafe	OTP/CPP/SGTP/TT	7870	--	0.4020	--	--	--	--	lb/day-clp
Valve	Bellows / Background ppmv	OTP/CPP/SGTP/TT	6551	--	0.0000	--	--	--	--	lb/day-clp
Valve	Category A	OTP/CPP/SGTP/TT	6474	--	0.0643	--	--	--	--	lb/day-clp
Valve	Category B	OTP/CPP/SGTP/TT	7872	--	0.0603	--	--	--	--	lb/day-clp
Valve	Category C	OTP/CPP/SGTP/TT	104929	--	0.0523	--	--	--	--	lb/day-clp
Valve	Category E	OTP/CPP/SGTP/TT	104926	--	0.0482	--	--	--	--	lb/day-clp
Valve	Category F	OTP/CPP/SGTP/TT	9710	--	0.0402	--	--	--	--	lb/day-clp
Valve	Category H	OTP/CPP/SGTP/TT	1099	--	0.0402	--	--	--	--	lb/day-clp
Valve	Category H (Inaccessible)	OTP/CPP/SGTP/TT	1100	--	0.0402	--	--	--	--	lb/day-clp
Valve	Category I	OTP/CPP/SGTP/TT	6475	--	0.0322	--	--	--	--	lb/day-clp
Connection	Accessible/Inaccessible	OTP/CPP/SGTP/TT	1101	--	0.0050	--	--	--	--	lb/day-clp
Connection	Unsafe	OTP/CPP/SGTP/TT	6568	--	0.0249	--	--	--	--	lb/day-clp
Connection	Category B	OTP/CPP/SGTP/TT	7874	--	0.0037	--	--	--	--	lb/day-clp
Connection	Category C	OTP/CPP/SGTP/TT	104928	--	0.0032	--	--	--	--	lb/day-clp
Connection	Category E	OTP/CPP/SGTP/TT	104925	--	0.0030	--	--	--	--	lb/day-clp
Connection	Category F	OTP/CPP/SGTP/TT	9709	--	0.0025	--	--	--	--	lb/day-clp
Compressor Seal	To VRS	OTP/CPP/SGTP/TT	6555	--	0.0000	--	--	--	--	lb/day-clp
	Exempt	OTP/CPP/SGTP/TT	6557	--	0.0000	--	--	--	--	lb/day-clp
Fugitive Components - Oil										
Valve	Accessible	OTP/CPP/SGTP/TT	1092	--	0.0020	--	--	--	--	lb/day-clp
Valve	Inaccessible	OTP/CPP/SGTP/TT	1093	--	0.0020	--	--	--	--	lb/day-clp
Valve	Bellows / Background ppmv	OTP/CPP/SGTP/TT	6558	--	0.0000	--	--	--	--	lb/day-clp
Valve	Category B	OTP/CPP/SGTP/TT	7877	--	0.0213	--	--	--	--	lb/day-clp
Valve	Category H	OTP/CPP/SGTP/TT	1094	--	0.0142	--	--	--	--	lb/day-clp
Valve	Category H (Inaccessible)	OTP/CPP/SGTP/TT	5967	--	0.0142	--	--	--	--	lb/day-clp
Connection	Accessible/Inaccessible	OTP/CPP/SGTP/TT	1095	--	0.0008	--	--	--	--	lb/day-clp
Connection	Unsafe	OTP/CPP/SGTP/TT	7880	--	0.0042	--	--	--	--	lb/day-clp
Connection	Category B	OTP/CPP/SGTP/TT	1096	--	0.0006	--	--	--	--	lb/day-clp
Connection	Category F	OTP/CPP/SGTP/TT	9711	--	0.0004	--	--	--	--	lb/day-clp
Pump Seal	Single	OTP/CPP/SGTP/TT	7879	--	0.1862	--	--	--	--	lb/day-clp
Pump Seal	Dual/Tandem	OTP/CPP/SGTP/TT	6561	--	0.0279	--	--	--	--	lb/day-clp
	Exempt	OTP/CPP/SGTP/TT	6563	--	0.0000	--	--	--	--	lb/day-clp
Solvent Usage										
	Cleaning/Degreasing	OTP/CPP/SGTP/TT	5740	-	mass balan	-	-	-	-	lbs

Table 5.3 Hourly and Daily Emissions

Equipment Item	Description			NOx		ROC		CO		SOx		PM		PM10		Federal
		Exxon ID #	APCD DeviceNo	lb/hr	lb/day	lb/hr	lb/day	lb/hr	lb/day	lb/hr	lb/day	lb/hr	lb/day	lb/hr	lb/day	Enforceability
Combustion - Cogen Power Plant: Normal Operations Mode																
	Gas Turbine 38.63 MW	CPP/ZAN-2501	6585	12.52	300.52	2.53	60.77	11.97	287.26	1.56	37.34	7.27	174.56	5.82	139.65	FE
	Heat Recovery Steam Generator	CPP/EAL-2601	7865	3.81	91.48	0.77	18.50	3.64	87.45	0.47	11.37	2.21	53.14	1.77	42.51	NE
	Turbine Bypass Stack	CPP/ZAN-2501	7864	0.13	3.04	0.03	0.61	0.12	2.90	0.02	0.38	0.07	1.76	0.06	1.41	FE
				16.33	**392.00**	**3.30**	**79.26**	**17.00**	**408.00**	**2.03**	**48.71**	**9.49**	**227.71**	**7.59**	**182.16**	FE
Combustion - Cogen Power Plant: HRSG Only Mode																
	Heat Recovery Steam Generator	CPP/EAL-2601	7865	10.35	248.40	3.28	78.66	17.00	408.00	1.17	27.99	1.73	41.40	1.38	33.12	FE
Combustion - Cogen Power Plant: Planned Startup/Shutdown Mode																
	Combined CPP + Bypass Stacks (22 MW)	CPP/ZAN-2501/EAL-2601	7866	89.87	179.73	29.43	58.86	182.82	365.64	1.04	2.09	8.62	17.23	6.89	13.79	FE
SGTP - Incinerator																
	TGCU/Merox Vent Incinerator	SGTP/EAL-4603	7867	1.40	33.71	0.05	1.12	1.13	27.20	4.50	107.93	0.96	23.06	0.77	18.45	FE
	TGCU Incinerator (w/out Merox vent)	SGTP/EAL-4603	7868	1.37	32.89	0.05	1.10	1.11	26.54	4.12	98.83	0.94	22.50	0.75	18.00	FE
	Planned Startup/Shutdown/Maintenance	SGTP/EAL-4603	7869	1.40	33.71	0.05	1.12	1.13	27.20	6.20	148.80	0.96	23.06	0.77	18.45	FE
Combustion - Thermal Oxidizer																
	Purge and Pilot	OTP/EAW-1601	102738	0.47	11.29	0.03	0.62	0.40	9.49	0.02	0.39	0.04	0.86	0.04	0.86	FE
	Planned - Continuous LP	OTP/EAW-1601	102739	0.17	3.99	0.01	0.22	0.14	3.36	0.12	2.87	0.01	0.31	0.01	0.31	FE
	Planned - Continuous AG	OTP/EAW-1601	102740	0.03	0.69	0.00	0.04	0.02	0.58	0.01	0.25	0.00	0.05	0.00	0.05	FE
	Planned - Other	OTP/EAW-1601	102741	33.18	111.39	1.83	6.14	27.90	6.14	175.64	190.28	2.54	8.52	2.54	8.52	FE
	Unplanned - Other	OTP/EAW-1601	102742	300.15	300.15	14.16	14.16	216.02	14.16	4,976.97	4,976.97	19.66	19.66	19.66	19.66	FE
Combustion - Internal Combustion Engine																
	Floodwater Pump	LFC-07	8122	3.57	3.57	0.28	0.28	0.77	0.77	0.00	0.00	0.25	0.25	0.25	0.25	A
	Firewater Pump A	PBE-1396 A	1085	3.69	3.69	0.29	0.29	0.79	0.79	0.00	0.00	0.26	0.26	0.26	0.26	A
	Firewater Pump B	PBE-1396 B	1086	3.69	3.69	0.29	0.29	0.79	0.79	0.00	0.00	0.26	0.26	0.26	0.26	A
Crew Boat - Harmony/Heritage																
	Main Engine - DPV	Offshore (w/in 3-miles)	6515	60.81	364.88	3.09	18.51	14.60	87.59	0.04	0.23	5.96	35.73	5.72	34.30	FE
	Main Engine - DPV Broadbill	Offshore (w/in 3-miles)	107946	24.57	147.42	1.92	11.51	9.08	54.46	0.02	0.14	0.67	3.99	0.67	3.99	FE
	Main Engine - Spot Charter	Offshore (w/in 3-miles)	6564	101.24	607.41	3.09	18.51	14.60	87.59	0.04	0.23	5.96	35.73	5.72	34.30	FE
	Auxilliary Engine - DPV	Offshore (w/in 3-miles)	6516	4.32	25.94	0.35	2.12	0.93	5.59	0.00	0.01	0.30	1.82	0.29	1.75	FE
	Auxiliary Engine - DPV Broadbill	Offshore (w/in 3-miles)	107947	0.74	4.46	0.17	1.00	0.44	2.64	0.00	0.00	0.02	0.12	0.02	0.12	FE

Equipment Item	Description			NOx		ROC		CO		SOx		PM		PM10		Federal
		Exxon ID #	APCD DeviceNo	lb/hr	lb/day	lb/hr	lb/day	lb/hr	lb/day	lb/hr	lb/day	lb/hr	lb/day	lb/hr	lb/day	Enforceability
Supply Boat - Harmony/Heritage																
	Main Engine - DPV	Offshore (w/in 3-miles)	6513	48.19	48.19	2.40	2.40	11.20	11.20	0.03	0.03	4.72	4.72	4.53	4.53	FE
	Main Engine - Spot Charter	Offshore (w/in 3-miles)	7883	80.22	80.22	2.40	2.40	11.20	11.20	0.03	0.03	4.72	4.72	4.53	4.53	FE
	Generator Engine - DPV	Offshore (w/in 3-miles)	6514	6.60	158.40	0.54	12.94	1.42	34.14	0.00	0.06	0.46	11.14	0.45	10.70	FE
	Bow Thruster - DPV	Offshore (w/in 3-miles)	7884	16.50	33.00	1.35	2.70	3.56	7.11	0.01	0.01	1.16	2.32	1.11	2.23	FE
	Winch - DPV	Offshore (w/in 3-miles)	103247	13.50	26.99	1.10	2.20	2.91	5.82	0.00	0.01	0.95	1.90	0.91	1.82	FE
Compressor Vent																
	SOV Distance Piece Vent	OTP/CZZ-1301	7881	-	-	0.10	2.40	-	-	-	-	-	-	-	-	FE
	VRU Distance Piece Vent	OTP/CZZ-1302/1303	7882	-	-	0.10	2.40	-	-	-	-	-	-	-	-	FE
Pigging Equipment																
	Emulsion Pig Receiver	TT	6565	-	-	0.59	2.38	-	-	-	-	-	-	-	-	FE
Tanks/Sumps/Separators																
	Oil Storage Tank A (vrs1)	TT/ABJ-3401A	6566	-	-	18.62	446.89	-	-	-	-	-	-	-	-	FE
	Oil Storage Tank B (vrs1)	TT/ABJ-3401B	6567	-	-	18.62	446.89	-	-	-	-	-	-	-	-	FE
	Area Drain Oil/Water Separator (cc)	TT/ABH-3402	6572	-	-	0.004	0.09	-	-	-	-	-	-	-	-	FE
	Area Drain Sump	TT/ABH-3403	6580	-	-	0.039	0.94	-	-	-	-	-	-	-	-	FE
	Rerun Tank A (vrs)	OTP/ABJ-1401A	6570	-	-	1.610	38.63	-	-	-	-	-	-	-	-	FE
	Rerun Tank B (vrs)	OTP/ABJ-1401B	6571	-	-	1.610	38.63	-	-	-	-	-	-	-	-	FE
	Equalization Tank 1424 (vent scbr/cc)	OTP/ABJ-1424	6573	-	-	0.232	5.58	-	-	-	-	-	-	-	-	FE
	Demulsifier Tank	OTP/ABJ-1402	6583	-	-	0.010	0.30	-	-	-	-	-	-	-	-	FE
	Oily Sludge Thickener (vrs)	OTP/ABJ-1423	6574	-	-	0.022	0.52	-	-	-	-	-	-	-	-	FE
	Backwash Sump (vrs)	OTP/ABH-1442	6575	-	-	0.004	0.09	-	-	-	-	-	-	-	-	FE
	Backwash Collection Tank (vrs)	OTP/ABH-1421	7885	-	-	0.001	0.03	-	-	-	-	-	-	-	-	FE
	Open Drain Sump (cc)	OTP/ABH-1413	6576	-	-	0.004	0.09	-	-	-	-	-	-	-	-	FE
	Area Drain Sump	OTP/ABH-1414	6581	-	-	0.255	6.12	-	-	-	-	-	-	-	-	FE
	Area Drain Oil/Water Separator (cc)	OTP/ABH-1415	6577	-	-	0.007	0.16	-	-	-	-	-	-	-	-	FE
	Area Drain Sump	SGTP/ABH-4405	6582	-	-	0.025	0.59	-	-	-	-	-	-	-	-	FE
	Area Drain Oil/Water Separator (cc)	SGTP/ABH-4406	6578	-	-	0.004	0.09	-	-	-	-	-	-	-	-	FE
	Open Drain Sump (cc)	SGTP/ABH-4407	6579	-	-	0.000	0.01	-	-	-	-	-	-	-	-	FE
	Chemical Storage Tote Tanks	Various	7886	-	-	0.023	0.55	-	-	-	-	-	-	-	-	FE

Equipment Item	Description			NOx		ROC		CO		SOx		PM		PM10		Federal
		Exxon ID #	APCD DeviceNo	lb/hr	lb/day	lb/hr	lb/day	lb/hr	lb/day	lb/hr	lb/day	lb/hr	lb/day	lb/hr	lb/day	Enforceability
Fugitive Components - Gas																
Valve	Accessible	OTP/CPP/SGTP/TT	1097	-	-	0.06	1.53	-	-	-	-	-	-	-	-	NE
Valve	Inaccessible	OTP/CPP/SGTP/TT	1098	-	-	0.10	2.33	-	-	-	-	-	-	-	-	NE
Valve	Unsafe	OTP/CPP/SGTP/TT	7870	-	-	0.80	19.30	-	-	-	-	-	-	-	-	NE
Valve	Bellows / Background ppmv	OTP/CPP/SGTP/TT	6551	-	-	0.00	0.00	-	-	-	-	-	-	-	-	NE
Valve	Category A	OTP/CPP/SGTP/TT	6474	-	-	0.13	3.22	-	-	-	-	-	-	-	-	NE
Valve	Category B	OTP/CPP/SGTP/TT	7872	-	-	0.47	11.28	-	-	-	-	-	-	-	-	NE
Valve	Category C	OTP/CPP/SGTP/TT	104929	-	-	0.17	4.02	-	-	-	-	-	-	-	-	NE
Valve	Category E	OTP/CPP/SGTP/TT	104926	-	-	1.14	27.35	-	-	-	-	-	-	-	-	NE
Valve	Category F	OTP/CPP/SGTP/TT	9710	-	-	0.02	0.52	-	-	-	-	-	-	-	-	NE
Valve	Category H	OTP/CPP/SGTP/TT	1099	-	-	0.89	21.39	-	-	-	-	-	-	-	-	NE
Valve	Category H (Inaccessible)	OTP/CPP/SGTP/TT	1100	-	-	0.06	1.49	-	-	-	-	-	-	-	-	NE
Valve	Category I	OTP/CPP/SGTP/TT	6475	-	-	0.58	13.99	-	-	-	-	-	-	-	-	NE
Connection	Accessible/Inaccessible	OTP/CPP/SGTP/TT	1101	-	-	2.01	48.27	-	-	-	-	-	-	-	-	NE
Connection	Unsafe	OTP/CPP/SGTP/TT	6568	-	-	0.48	11.55	-	-	-	-	-	-	-	-	NE
Connection	Category B	OTP/CPP/SGTP/TT	7874	-	-	1.73	41.53	-	-	-	-	-	-	-	-	NE
Connection	Category C	OTP/CPP/SGTP/TT	104928	-	-	0.02	0.60	-	-	-	-	-	-	-	-	NE
Connection	Category E	OTP/CPP/SGTP/TT	104925	-	-	0.21	5.14	-	-	-	-	-	-	-	-	NE
Connection	Category F	OTP/CPP/SGTP/TT	9709	-	-	0.01	0.14	-	-	-	-	-	-	-	-	NE
Compressor Seal	To VRS	OTP/CPP/SGTP/TT	6555	-	-	0.00	0.00	-	-	-	-	-	-	-	-	NE
	Exempt	OTP/CPP/SGTP/TT	6557	-	-	0.00	0.00	-	-	-	-	-	-	-	-	NE
	Sub-Total:					8.90	213.65									FE
Fugitive Components - Oil																
Valve	Accessible	OTP/CPP/SGTP/TT	1092	-	-	0.02	0.54	-	-	-	-	-	-	-	-	NE
Valve	Inaccessible	OTP/CPP/SGTP/TT	1093	-	-	0.00	0.01	-	-	-	-	-	-	-	-	NE
Valve	Bellows / Background ppmv	OTP/CPP/SGTP/TT	6558	-	-	0.00	0.00	-	-	-	-	-	-	-	-	NE
Valve	Category B	OTP/CPP/SGTP/TT	7877	-	-	0.00	0.04	-	-	-	-	-	-	-	-	NE
Valve	Category H	OTP/CPP/SGTP/TT	1094	-	-	0.28	6.79	-	-	-	-	-	-	-	-	NE
Valve	Category H (Inaccessible)	OTP/CPP/SGTP/TT	5967	-	-	0.01	0.26	-	-	-	-	-	-	-	-	NE
Connection	Accessible/Inaccessible	OTP/CPP/SGTP/TT	1095	-	-	0.24	5.64	-	-	-	-	-	-	-	-	NE
Connection	Unsafe	OTP/CPP/SGTP/TT	7880	-	-	0.00	0.00	-	-	-	-	-	-	-	-	NE
Connection	Category B	OTP/CPP/SGTP/TT	1096	-	-	0.00	0.07	-	-	-	-	-	-	-	-	NE
Connection	Category F	OTP/CPP/SGTP/TT	9711	-	-	0.00	0.00	-	-	-	-	-	-	-	-	NE
Pump Seal	Single	OTP/CPP/SGTP/TT	7879	-	-	0.03	0.74	-	-	-	-	-	-	-	-	NE
Pump Seal	Dual/Tandem	OTP/CPP/SGTP/TT	6561	-	-	0.05	1.26	-	-	-	-	-	-	-	-	NE
	Exempt	OTP/CPP/SGTP/TT	6563	-	-	0.00	0.00	-	-	-	-	-	-	-	-	NE
	Sub-Total:					0.64	15.36									FE
Solvent Usage																
	Cleaning/Degreasing	OTP/CPP/SGTP/TT	5740	-	-	0.69	5.52	-	-	-	-	-	-	-	-	FE

Table 5.4 Quarterly and Annual Emissions

Equipment Item	Description			NOx		ROC		CO		SOx		PM		PM10		Federal
		Exxon ID #	APCD DeviceNo	TPQ	TPY	TPQ	TPY	TPQ	TPY	TPQ	TPY	TPQ	TPY	TPQ	TPY	Enforceability
Combustion - Cogen Power Plant: Normal Operations Mode																
	Gas Turbine 38.63 MW	CPP/ZAN-2501	6585	13.67	54.73	2.76	11.07	13.07	52.32	1.70	6.80	7.94	31.79	6.35	25.43	FE
	Heat Recovery Steam Generator	CPP/EAL-2601	7865	4.16	16.66	0.84	3.37	3.98	15.93	0.52	2.07	2.42	9.68	1.93	7.74	NE
	Turbine Bypass Stack	CPP/ZAN-2501	7864	0.14	0.55	0.03	0.11	0.13	0.53	0.02	0.07	0.08	0.32	0.06	0.26	FE
				17.84	**71.39**	**3.61**	**14.44**	**18.56**	**74.31**	**2.22**	**8.87**	**10.36**	**41.47**	**8.29**	**33.18**	FE
Combustion - Cogen Power Plant: HRSG Only Mode																
	Heat Recovery Steam Generator	CPP/EAL-2601	7865	11.30	45.24	3.58	14.33	18.56	74.31	1.27	5.10	1.88	7.54	1.51	6.03	FE
Combustion - Cogen Power Plant: Planned Startup/Shutdown Mode																
	Combined CPP + Bypass Stacks (22 MW)	CPP/ZAN-2501/EAL-2601	7866	0.27	0.81	0.09	0.26	0.55	1.65	0.00	0.01	0.03	0.08	0.02	0.06	FE
SGTP - Incinerator																
	TGCU/Merox Vent Incinerator	SGTP/EAL-4603	7867	1.54	6.15	0.05	0.21	1.24	4.96	4.92	19.70	1.05	4.21	0.84	3.37	FE
	TGCU Incinerator (w/out Merox vent)	SGTP/EAL-4603	7868	1.50	6.00	0.05	0.20	1.21	4.84	4.51	18.04	1.03	4.11	0.82	3.29	FE
	Planned Startup/Shutdown/Maintenance	SGTP/EAL-4603	7869	0.06	0.06	0.00	0.00	0.05	0.05	0.26	1.04	0.04	0.04	0.03	0.03	FE
Combustion - Thermal Oxidizer																
	Purge and Pilot	OTP/EAW-1601	102738	0.52	2.06	0.03	0.11	0.43	1.73	0.02	0.07	0.04	0.16	0.04	0.16	FE
	Planned - Continuous LP	OTP/EAW-1601	102739	0.18	0.73	0.01	0.04	0.15	0.61	0.13	0.52	0.01	0.06	0.01	0.06	FE
	Planned - Continuous AG	OTP/EAW-1601	102740	0.03	0.12	0.00	0.01	0.03	0.10	0.01	0.04	0.00	0.01	0.00	0.01	FE
	Planned - Other	OTP/EAW-1601	102741	0.70	1.47	0.04	0.08	0.59	1.24	0.97	1.89	0.05	0.11	0.05	0.11	FE
	Unplanned - Other	OTP/EAW-1601	102742	0.31	0.86	0.02	0.05	0.24	0.70	2.99	8.33	0.02	0.06	0.02	0.06	FE
Combustion - Internal Combustion Engine																
	Floodwater Pump	LFC-07	8122	0.023	0.071	0.002	0.006	0.005	0.015	0.0000	0.000	0.002	0.005	0.002	0.005	A
	Firewater Pump A	PBE-1396 A	1085	0.024	0.096	0.002	0.008	0.005	0.021	0.0000	0.000	0.002	0.007	0.002	0.007	A
	Firewater Pump B	PBE-1396 B	1086	0.024	0.096	0.002	0.008	0.005	0.021	0.0000	0.000	0.002	0.007	0.002	0.007	A
Crew Boat - Harmony/Heritage																
	Main Engine - DPV	Offshore (w/in 3-miles)	6515	1.34	5.37	0.07	0.27	0.32	1.29	0.00	0.00	0.13	0.53	0.13	0.51	FE
	Main Engine - DPV Broadbill	Offshore (w/in 3-miles)	107946	0.58	2.33	0.05	0.18	0.21	0.86	0.00	0.00	0.02	0.06	0.02	0.06	FE
	Main Engine - Spot Charter	Offshore (w/in 3-miles)	6564	0.37	1.49	0.01	0.05	0.05	0.21	0.00	0.00	0.02	0.09	0.02	0.08	FE
	sub-total =			2.30	9.19	0.12	0.50	0.59	2.36	0.00	0.01	0.17	0.68	0.16	0.65	FE
	Auxilliary Engine - DPV	Offshore (w/in 3-miles)	6516	0.45	1.80	0.04	0.15	0.10	0.39	0.00	0.00	0.03	0.13	0.03	0.12	FE
	Auxiliary Engine - DPV Broadbill	Offshore (w/in 3-miles)	107947	0.11	0.44	0.02	0.10	0.06	0.26	0.00	0.00	0.00	0.01	0.00	0.01	FE
	sub-total =			0.56	2.24	0.06	0.25	0.16	0.65	0.00	0.00	0.03	0.14	0.03	0.13	FE

Equipment Item	Description			NOx		ROC		CO		SOx		PM		PM10		Federal
		Exxon ID #	APCD DeviceNo	TPQ	TPY	TPQ	TPY	TPQ	TPY	TPQ	TPY	TPQ	TPY	TPQ	TPY	Enforceability
Supply Boat - Harmony/Heritage																
	Main Engine - DPV	Offshore (w/in 3-miles)	6513	1.01	1.01	0.05	0.05	0.24	0.24	0.00	0.00	0.10	0.10	0.10	0.10	FE
	Main Engine - Spot Charter	Offshore (w/in 3-miles)	7883	0.17	0.17	0.01	0.01	0.02	0.02	0.00	0.00	0.01	0.01	0.01	0.01	FE
	Generator Engine - DPV	Offshore (w/in 3-miles)	6514	0.40	0.40	0.03	0.03	0.09	0.09	0.00	0.00	0.03	0.03	0.03	0.03	FE
	Bow Thruster - DPV	Offshore (w/in 3-miles)	7884	0.12	0.12	0.01	0.01	0.02	0.02	0.00	0.00	0.01	0.01	0.01	0.01	FE
	Winch - DPV	Offshore (w/in 3-miles)	103247	0.09	0.09	0.01	0.01	0.02	0.02	0.00	0.00	0.01	0.01	0.01	0.01	FE
Compressor Vent																
	SOV Distance Piece Vent	OTP/CZZ-1301	7881	-	-	0.11	0.44	-	-	-	-	-	-	-	-	FE
	VRU Distance Piece Vent	OTP/CZZ-1302/1303	7882	-	-	0.11	0.44	-	-	-	-	-	-	-	-	FE
Pigging Equipment																
	Emulsion Pig Receiver	TT	6565	-	-	0.01	0.03	-	-	-	-	-	-	-	-	FE
Tanks/Sumps/Separators																
	Oil Storage Tank A (vrs1)	TT/ABJ-3401A	6566	-	-	0.82	3.26	-	-	-	-	-	-	-	-	FE
	Oil Storage Tank B (vrs1)	TT/ABJ-3401B	6567	-	-	0.82	3.26	-	-	-	-	-	-	-	-	FE
	Area Drain Oil/Water Separator (cc)	TT/ABH-3402	6572	-	-	0.004	0.02	-	-	-	-	-	-	-	-	FE
	Area Drain Sump	TT/ABH-3403	6580	-	-	0.04	0.17	-	-	-	-	-	-	-	-	FE
	Rerun Tank A (vrs)	OTP/ABJ-1401A	6570	-	-	0.07	0.28	-	-	-	-	-	-	-	-	FE
	Rerun Tank B (vrs)	OTP/ABJ-1401B	6571	-	-	0.07	0.28	-	-	-	-	-	-	-	-	FE
	Equalization Tank 1424 (vent scbr/cc)	OTP/ABJ-1424	6573	-	-	0.25	1.02	-	-	-	-	-	-	-	-	FE
	Demulsifier Tank	OTP/ABJ-1402	6583	-	-	0.01	0.05	-	-	-	-	-	-	-	-	FE
	Oily Sludge Thickener (vrs)	OTP/ABJ-1423	6574	-	-	0.02	0.10	-	-	-	-	-	-	-	-	FE
	Backwash Sump (vrs)	OTP/ABH-1442	6575	-	-	0.004	0.02	-	-	-	-	-	-	-	-	FE
	Backwash Collection Tank (vrs)	OTP/ABH-1421	7885	-	-	0.001	0.01	-	-	-	-	-	-	-	-	FE
	Open Drain Sump (cc)	OTP/ABH-1413	6576	-	-	0.004	0.02	-	-	-	-	-	-	-	-	FE
	Area Drain Sump	OTP/ABH-1414	6581	-	-	0.28	1.12	-	-	-	-	-	-	-	-	FE
	Area Drain Oil/Water Separator (cc)	OTP/ABH-1415	6577	-	-	0.01	0.03	-	-	-	-	-	-	-	-	FE
	Area Drain Sump	SGTP/ABH-4405	6582	-	-	0.03	0.11	-	-	-	-	-	-	-	-	FE
	Area Drain Oil/Water Separator (cc)	SGTP/ABH-4406	6578	-	-	0.004	0.02	-	-	-	-	-	-	-	-	FE
	Open Drain Sump (cc)	SGTP/ABH-4407	6579	-	-	0.0005	0.002	-	-	-	-	-	-	-	-	FE
	Chemical Storage Tote Tanks	Various	7886	-	-	0.10	0.10	-	-	-	-	-	-	-	-	FE

Equipment Item	Description			NOx		ROC		CO		SOx		PM		PM10		Federal
		Exxon ID #	APCD DeviceNo	TPQ	TPY	TPQ	TPY	TPQ	TPY	TPQ	TPY	TPQ	TPY	TPQ	TPY	Enforceability
Fugitive Components - Gas																
Valve	Accessible	OTP/CPP/SGTP/TT	1097	-	-	0.07	0.28	-	-	-	-	-	-	-	-	NE
Valve	Inaccessible	OTP/CPP/SGTP/TT	1098	-	-	0.11	0.43	-	-	-	-	-	-	-	-	NE
Valve	Unsafe	OTP/CPP/SGTP/TT	7870	-	-	0.88	3.52	-	-	-	-	-	-	-	-	NE
Valve	Bellows / Background ppmv	OTP/CPP/SGTP/TT	6551	-	-	0.00	0.00	-	-	-	-	-	-	-	-	NE
Valve	Category A	OTP/CPP/SGTP/TT	6474	-	-	0.15	0.59	-	-	-	-	-	-	-	-	NE
Valve	Category B	OTP/CPP/SGTP/TT	7872	-	-	0.51	2.06	-	-	-	-	-	-	-	-	NE
Valve	Category C	OTP/CPP/SGTP/TT	104929	-	-	0.18	0.73	-	-	-	-	-	-	-	-	NE
Valve	Category E	OTP/CPP/SGTP/TT	104926	-	-	1.25	4.99	-	-	-	-	-	-	-	-	NE
Valve	Category F	OTP/CPP/SGTP/TT	9710	-	-	0.02	0.10	-	-	-	-	-	-	-	-	NE
Valve	Category H	OTP/CPP/SGTP/TT	1099	-	-	0.98	3.90	-	-	-	-	-	-	-	-	NE
Valve	Category H (Inaccessible)	OTP/CPP/SGTP/TT	1100	-	-	0.07	0.27	-	-	-	-	-	-	-	-	NE
Valve	Category I	OTP/CPP/SGTP/TT	6475	-	-	0.64	2.55	-	-	-	-	-	-	-	-	NE
Connection	Accessible/Inaccessible	OTP/CPP/SGTP/TT	1101	-	-	2.20	8.81	-	-	-	-	-	-	-	-	NE
Connection	Unsafe	OTP/CPP/SGTP/TT	6568	-	-	0.53	2.11	-	-	-	-	-	-	-	-	NE
Connection	Category B	OTP/CPP/SGTP/TT	7874	-	-	1.89	7.58	-	-	-	-	-	-	-	-	NE
Connection	Category C	OTP/CPP/SGTP/TT	104928	-	-	0.03	0.11	-	-	-	-	-	-	-	-	NE
Connection	Category E	OTP/CPP/SGTP/TT	104925	-	-	0.23	0.94	-	-	-	-	-	-	-	-	NE
Connection	Category F	OTP/CPP/SGTP/TT	9709	-	-	0.01	0.03	-	-	-	-	-	-	-	-	NE
Compressor Seal	To VRS	OTP/CPP/SGTP/TT	6555	-	-	0.00	0.00	-	-	-	-	-	-	-	-	NE
	Exempt	OTP/CPP/SGTP/TT	6557	-	-	0.00	0.00	-	-	-	-	-	-	-	-	NE
	Sub-Total:					9.75	38.99									FE
Fugitive Components - Oil																
Valve	Accessible	OTP/CPP/SGTP/TT	1092	-	-	0.02	0.10	-	-	-	-	-	-	-	-	NE
Valve	Inaccessible	OTP/CPP/SGTP/TT	1093	-	-	0.00	0.00	-	-	-	-	-	-	-	-	NE
Valve	Bellows / Background ppmv	OTP/CPP/SGTP/TT	6558	-	-	0.00	0.00	-	-	-	-	-	-	-	-	NE
Valve	Category B	OTP/CPP/SGTP/TT	7877	-	-	0.00	0.01	-	-	-	-	-	-	-	-	NE
Valve	Category H	OTP/CPP/SGTP/TT	1094	-	-	0.31	1.24	-	-	-	-	-	-	-	-	NE
Valve	Category H (Inaccessible)	OTP/CPP/SGTP/TT	5967	-	-	0.01	0.05	-	-	-	-	-	-	-	-	NE
Connection	Accessible/Inaccessible	OTP/CPP/SGTP/TT	1095	-	-	0.26	1.03	-	-	-	-	-	-	-	-	NE
Connection	Unsafe	OTP/CPP/SGTP/TT	7880	-	-	0.00	0.00	-	-	-	-	-	-	-	-	NE
Connection	Category B	OTP/CPP/SGTP/TT	1096	-	-	0.00	0.01	-	-	-	-	-	-	-	-	NE
Connection	Category F	OTP/CPP/SGTP/TT	9711	-	-	0.00	0.00	-	-	-	-	-	-	-	-	NE
Pump Seal	Single	OTP/CPP/SGTP/TT	7879	-	-	0.03	0.14	-	-	-	-	-	-	-	-	NE
Pump Seal	Dual/Tandem	OTP/CPP/SGTP/TT	6561	-	-	0.06	0.23	-	-	-	-	-	-	-	-	NE
	Exempt	OTP/CPP/SGTP/TT	6563	-	-	0.00	0.00	-	-	-	-	-	-	-	-	NE
	Sub-Total:					0.70	2.80									FE
Solvent Usage																
	Cleaning/Degreasing	OTP/CPP/SGTP/TT	5740	-	-	0.25	1.00	-	-	-	-	-	-	-	-	FE

Table 5.5 Total Permitted Facility Emissions

A. Hourly

Equipment Category	NOx	ROC	CO	SOx	PM	PM10
Cogeneration Power Plant	89.87	29.43	182.82	2.05	9.49	7.59
SGTP - Incinerator	1.40	0.05	1.13	6.20	0.96	0.77
Thermal Oxidizer	0.66	0.04	0.56	0.15	0.05	0.05
Internal Combustion Engine	10.94	0.87	2.36	0.00	0.78	0.78
Crew Boats	105.56	3.44	15.53	0.04	6.26	6.01
Supply Boats	116.82	5.39	19.08	0.04	7.29	7.00
Pigging Equipment/Compressor Vents	-	0.59	-	-	-	-
Tanks/Sumps/Separators	-	20.86	-	-	-	-
Fugitive Components	-	9.54	-	-	-	-
Solvent Usage	-	0.69	-	-	-	-
Totals (lb/hr)	**325.26**	**70.90**	**221.49**	**8.48**	**24.83**	**22.20**

B. Daily

Equipment Category	NOx	ROC	CO	SOx	PM	PM10
Cogeneration Power Plant	395.04	79.88	408.00	49.09	229.47	183.58
SGTP - Incinerator	33.71	1.12	27.20	148.80	23.06	18.45
Thermal Oxidizer	15.97	0.88	13.43	3.50	1.22	1.22
Internal Combustion Engine	10.94	0.87	2.36	0.00	0.78	0.78
Crew Boats	633.35	20.63	93.18	0.24	37.55	36.05
Supply Boats	298.62	20.24	58.26	0.11	20.08	19.28
Pigging Equipment/Compressor Vents	-	2.38	-	-	-	-
Tanks/Sumps/Separators	-	500.69	-	-	-	-
Fugitive Components	-	229.01	-	-	-	-
Solvent Usage	-	5.52	-	-	-	-
Totals (lb/day)	**1,387.62**	**861.22**	**602.43**	**201.74**	**312.17**	**259.35**

C. Quarterly

Equipment Category	NOx	ROC	CO	SOx	PM	PM10
Cogeneration Power Plant	17.97	3.63	18.56	2.23	10.44	8.35
SGTP - Incinerator	1.54	0.05	1.24	4.92	1.05	0.84
Thermal Oxidizer	1.74	0.09	1.44	4.13	0.13	0.13
Internal Combustion Engine	0.07	0.01	0.02	0.00	0.01	0.01
Crew Boats	2.86	0.19	0.75	0.00	0.20	0.20
Supply Boats	1.79	0.10	0.39	0.00	0.15	0.15
Pigging Equipment/Compressor Vents	-	0.01	-	-	-	-
Tanks/Sumps/Separators	-	1.65	-	-	-	-
Fugitive Components	-	10.45	-	-	-	-
Solvent Usage	-	0.25	-	-	-	-
Totals (TPQ)	**25.96**	**16.43**	**22.40**	**11.29**	**11.98**	**9.67**

D. Annual

Equipment Category	NOx	ROC	CO	SOx	PM	PM10
Cogeneration Power Plant	71.95	14.55	74.31	8.94	41.79	33.43
SGTP - Incinerator	6.15	0.21	4.96	19.70	4.21	3.37
Thermal Oxidizer	5.24	0.29	4.39	10.85	0.40	0.40
Internal Combustion Engine	0.26	0.02	0.06	0.00	0.02	0.02
Crew Boats	11.43	0.74	3.01	0.01	0.82	0.79
Supply Boats	1.79	0.10	0.39	0.00	0.15	0.15
Pigging Equipment/Compressor Vents	-	0.03	-	-	-	-
Tanks/Sumps/Separators	-	6.30	-	-	-	-
Fugitive Components	-	41.79	-	-	-	-
Solvent Usage	-	1.00	-	-	-	-
Totals (TPY)	**96.82**	**65.04**	**87.12**	**39.50**	**47.39**	**38.15**

Table 5.6 Federal Potential to Emit

A. Hourly

Equipment Category	NOx	ROC	CO	SOx	PM	PM10
Cogeneration Power Plant	89.87	29.43	182.82	2.05	9.49	7.59
SGTP - Incinerator	1.40	0.05	1.13	6.20	0.96	0.77
Thermal Oxidizer	0.66	0.04	0.56	0.15	0.05	0.05
Crew Boats	105.56	3.44	15.53	0.04	6.26	6.01
Supply Boats	116.82	5.39	19.08	0.04	7.29	7.00
Pigging Equipment/Compressor Vents	-	0.59	-	-	-	-
Tanks/Sumps/Separators	-	20.86	-	-	-	-
Fugitive Components	-	9.54	-	-	-	-
Solvent Usage	-	0.69	-	-	-	-
Totals (lb/hr)	**314.31**	**70.03**	**219.13**	**8.47**	**24.05**	**21.42**

B. Daily

Equipment Category	NOx	ROC	CO	SOx	PM	PM10
Cogeneration Power Plant	395.04	79.88	408.00	49.09	229.47	183.58
SGTP - Incinerator	33.71	1.12	27.20	148.80	23.06	18.45
Thermal Oxidizer	15.97	0.88	13.43	3.50	1.22	1.22
Crew Boats	633.35	20.63	93.18	0.24	37.55	36.05
Supply Boats	298.62	20.24	58.26	0.11	20.08	19.28
Pigging Equipment/Compressor Vents	-	2.38	-	-	-	-
Tanks/Sumps/Separators	-	500.69	-	-	-	-
Fugitive Components	-	229.01	-	-	-	-
Solvent Usage	-	5.52	-	-	-	-
Totals (lb/day)	**1,376.68**	**860.35**	**600.08**	**201.74**	**311.39**	**258.58**

C. Quarterly

Equipment Category	NOx	ROC	CO	SOx	PM	PM10
Cogeneration Power Plant	17.97	3.63	18.56	2.23	10.44	8.35
SGTP - Incinerator	1.54	0.05	1.24	4.92	1.05	0.84
Thermal Oxidizer	1.74	0.09	1.44	4.13	0.13	0.13
Crew Boats	2.86	0.19	0.75	0.00	0.20	0.20
Supply Boats	1.79	0.10	0.39	0.00	0.15	0.15
Pigging Equipment/Compressor Vents	-	0.01	-	-	-	-
Tanks/Sumps/Separators	-	1.65	-	-	-	-
Fugitive Components	-	10.45	-	-	-	-
Solvent Usage	-	0.25	-	-	-	-
Totals (TPQ)	**25.89**	**16.43**	**22.39**	**11.29**	**11.98**	**9.67**

D. Annual

Equipment Category	NOx	ROC	CO	SOx	PM	PM10
Cogeneration Power Plant	71.95	14.55	74.31	8.94	41.79	33.43
SGTP - Incinerator	6.15	0.21	4.96	19.70	4.21	3.37
Thermal Oxidizer	5.24	0.29	4.39	10.85	0.40	0.40
Crew Boats	11.43	0.74	3.01	0.01	0.82	0.79
Supply Boats	1.79	0.10	0.39	0.00	0.15	0.15
Pigging Equipment/Compressor Vents	-	0.03	-	-	-	-
Tanks/Sumps/Separators	-	6.30	-	-	-	-
Fugitive Components	-	41.79	-	-	-	-
Solvent Usage	-	1.00	-	-	-	-
Totals (TPY)	**96.55**	**65.02**	**87.06**	**39.50**	**47.37**	**38.13**

Table 5.7 Hazardous Air Pollutant Emission Factors

Equipment Item	Description			Emission Factors						
		Exxon ID #	APCD DeviceNo	Benzene	Toluene	Xylene	Formaldehyde	PAH	Hexane	Units
Combustion - Cogen Power Plant:	Normal Operations Mode									
	Gas Turbine 38.63 MW	CPP/ZAN-2501	6585	9.42E-06	1.02E-04	5.02E-05	5.57E-04	1.73E-06	--	lb/MMBtu
	Heat Recovery Steam Generator	CPP/EAL-2601	7865	2.06E-06	3.33E-06	--	7.35E-05	6.44E-07	1.76E-03	lb/MMBtu
	Turbine Bypass Stack	CPP/ZAN-2501	7864	9.42E-06	1.02E-04	5.02E-05	5.57E-04	1.73E-06	--	lb/MMBtu
Combustion - Cogen Power Plant:	HRSG Only Mode									
	Heat Recovery Steam Generator[a]	CPP/EAL-2601	7865	2.06E-06	3.33E-06	--	7.35E-05	6.44E-07	1.76E-03	lb/MMBtu
Combustion - Cogen Power Plant:	Planned Startup/Shutdown Mode									
	Combined CPP + Bypass Stacks (22 MW)	CPP/ZAN-2501/EAL-2601	7866	9.42E-06	1.02E-04	5.02E-05	5.57E-04	1.73E-06	--	lb/MMBtu
SGTP - Incinerator										
	TGCU/Merox Vent Incinerator	SGTP/EAL-4602	7867	2.06E-06	3.33E-06	--	7.35E-05	6.44E-07	1.76E-03	lb/MMBtu
	TGCU Incinerator (w/out Merox vent)	SGTP/EAL-4603	7868	2.06E-06	3.33E-06	--	7.35E-05	6.44E-07	1.76E-03	lb/MMBtu
	Planned Startup/Shutdown/Maintenance	SGTP/EAL-4603	7869	2.06E-06	3.33E-06	--	7.35E-05	6.44E-07	1.76E-03	lb/MMBtu
Combustion - Thermal Oxidizer										
	Purge and Pilot	OTP/EAW-1601	102738	2.06E-06	3.33E-06	--	7.35E-05	6.44E-07	1.76E-03	lb/MMBtu
	Planned - Continuous LP	OTP/EAW-1601	102739	2.06E-06	3.33E-06	--	7.35E-05	6.44E-07	1.76E-03	lb/MMBtu
	Planned - Continuous AG	OTP/EAW-1601	102740	2.06E-06	3.33E-06	--	7.35E-05	6.44E-07	1.76E-03	lb/MMBtu
	Planned - Other	OTP/EAW-1601	102741	2.06E-06	3.33E-06	--	7.35E-05	6.44E-07	1.76E-03	lb/MMBtu
	Unplanned - Other	OTP/EAW-1601	102742	2.06E-06	3.33E-06	--	7.35E-05	6.44E-07	1.76E-03	lb/MMBtu
Crew Boat - Harmony/Heritage										
	Main Engines - con	Offshore (w/in 3-miles)	6515	1.31E-01	5.73E-02	3.99E-02	1.65E-01	2.35E-02	--	lb/1000 gal
	Main Engines - Uncontrolled Spot Charter	Offshore (w/in 3-miles)	6564	1.31E-01	5.73E-02	3.99E-02	1.65E-01	2.35E-02	--	lb/1000 gal
	Auxilliary Engines	Offshore (w/in 3-miles)	6516	1.31E-01	5.73E-02	3.99E-02	1.65E-01	2.35E-02	--	lb/1000 gal

Equipment Item	Description			Emission Factors						
		Exxon ID #	APCD DeviceNo	Benzene	Toluene	Xylene	Formaldehyde	PAH	Hexane	Units
Supply Boat - Harmony/Heritage										
	Main Engine - con	Offshore (w/in 3-miles)	6513	1.31E-01	5.73E-02	3.99E-02	1.65E-01	2.35E-02	--	lb/1000 gal
	Main Engine - uncon	Offshore (w/in 3-miles)	7883	1.31E-01	5.73E-02	3.99E-02	1.65E-01	2.35E-02	--	lb/1000 gal
	Generator Engine - uncon	Offshore (w/in 3-miles)	6514	1.31E-01	5.73E-02	3.99E-02	1.65E-01	2.35E-02	--	lb/1000 gal
	Bow Thruster - uncon	Offshore (w/in 3-miles)	7884	1.31E-01	5.73E-02	3.99E-02	1.65E-01	2.35E-02	--	lb/1000 gal
	Winch - uncon	Offshore (w/in 3-miles)	103247	1.31E-01	5.73E-02	3.99E-02	1.65E-01	2.35E-02	--	lb/1000 gal
Compressor Vent										
	SOV Distance Piece Vent	OTP/CZZ-1301	7881	3.20E-04	--	--	--	--	1.69E-02	lb/hr
	VRU Distance Piece Vent	OTP/CZZ-1302/1303	7882	3.20E-04	--	--	--	--	1.69E-02	lb/hr
Pigging Equipment										
	Emulsion Pig Receiver	TT	6565	2.42E-05	--	--	--	--	1.28E-03	lb/acf-event
Tanks/Sumps/Separators										
	Oil Storage Tank A (vrs1)	TT/ABJ-3401A	6566	8.83E-02	5.15E-02	--	--	--	3.61E-01	tons/year
	Oil Storage Tank B (vrs1)	TT/ABJ-3401B	6567	8.83E-02	5.15E-02	--	--	--	3.61E-01	tons/year
	Area Drain Oil/Water Separator (cc)	TT/ABH-3402	6572	3.93E-05	2.29E-04	--	--	--	1.61E-04	lb/ft^2-day
	Area Drain Sump	TT/ABH-3403	6580	1.57E-04	9.16E-04	--	--	--	6.42E-04	lb/ft^2-day
	Rerun Tank A (vrs)	OTP/ABJ-1401A	6570	7.59E-03	4.42E-03	--	--	--	3.10E-02	tons/year
	Rerun Tank B (vrs)	OTP/ABJ-1401B	6571	7.59E-03	4.42E-03	--	--	--	3.10E-02	tons/year
	Equalization Tank 1424 (vent scbr/cc)	OTP/ABJ-1424	6573	3.93E-05	2.29E-05	--	--	--	1.61E-04	lb/ft^2-day
	Demulsifier Tank	OTP/ABJ-1402	6583	1.36E-03	7.90E-04	--	--	--	5.54E-03	tons/year
	Oily Sludge Thickener (vrs)	OTP/ABJ-1423	6574	7.86E-06	4.58E-06	--	--	--	3.21E-05	lb/ft^2-day
	Backwash Sump (vrs)	OTP/ABH-1442	6575	7.86E-06	4.58E-06	--	--	--	3.21E-05	lb/ft^2-day
	Backwash Collection Tank (vrs)	OTP/ABH-1421	7885	7.86E-06	4.58E-06	--	--	--	3.21E-05	lb/ft^2-day
	Open Drain Sump (cc)	OTP/ABH-1413	6576	3.93E-05	2.29E-05	--	--	--	1.61E-04	lb/ft^2-day
	Area Drain Sump	OTP/ABH-1414	6581	1.57E-04	9.16E-05	--	--	--	6.42E-04	lb/ft^2-day
	Area Drain Oil/Water Separator (cc)	OTP/ABH-1415	6577	3.93E-05	2.29E-05	--	--	--	1.61E-04	lb/ft^2-day
	Area Drain Sump	SGTP/ABH-4405	6582	1.57E-04	9.16E-05	--	--	--	6.42E-04	lb/ft^2-day
	Area Drain Oil/Water Separator (cc)	SGTP/ABH-4406	6578	3.93E-05	2.29E-05	--	--	--	1.61E-04	lb/ft^2-day
	Open Drain Sump (cc)	SGTP/ABH-4407	6579	3.93E-05	2.29E-05	--	--	--	1.61E-04	lb/ft^2-day
	Chemical Storage Tote Tanks	Various	7886	2.71E-03	1.58E-03	--	--	--	1.11E-02	tons/year

Equipment Item	Description			Emission Factors						
		Exxon ID #	APCD DeviceNo	Benzene	Toluene	Xylene	Formaldehyde	PAH	Hexane	Units
Fugitive Components - Gas										
Valve	Accessible	OTP/CPP/SGTP/TT	1097	2.57E-04	--	--	--	--	1.36E-02	lb/day-clp
Valve	Inaccessible	OTP/CPP/SGTP/TT	1098	2.57E-04	--	--	--	--	1.36E-02	lb/day-clp
Valve	Unsafe	OTP/CPP/SGTP/TT	7870	1.29E-03	--	--	--	--	6.79E-02	lb/day-clp
Valve	Bellows / Background ppmv	OTP/CPP/SGTP/TT	6551	0.00E+00	--	--	--	--	0.00E+00	lb/day-clp
Valve	Category A	OTP/CPP/SGTP/TT	6474	2.06E-04	--	--	--	--	1.09E-02	lb/day-clp
Valve	Category B	OTP/CPP/SGTP/TT	7872	1.93E-04	--	--	--	--	1.02E-02	lb/day-clp
Valve	Category C	OTP/CPP/SGTP/TT	104929	1.67E-04	--	--	--	--	8.82E-03	lb/day-clp
Valve	Category E	OTP/CPP/SGTP/TT	104926	1.54E-04	--	--	--	--	8.14E-03	lb/day-clp
Valve	Category F	OTP/CPP/SGTP/TT	9710	1.29E-04	--	--	--	--	6.79E-03	lb/day-clp
Valve	Category H	OTP/CPP/SGTP/TT	1099	1.29E-04	--	--	--	--	6.79E-03	lb/day-clp
Valve	Category H (Inaccessible)	OTP/CPP/SGTP/TT	1100	1.29E-04	--	--	--	--	6.79E-03	lb/day-clp
Valve	Category I	OTP/CPP/SGTP/TT	6475	1.03E-04	--	--	--	--	5.43E-03	lb/day-clp
Connection	Accessible/Inaccessible	OTP/CPP/SGTP/TT	1101	1.60E-05	--	--	--	--	8.42E-04	lb/day-clp
Connection	Unsafe	OTP/CPP/SGTP/TT	6568	7.98E-05	--	--	--	--	4.21E-03	lb/day-clp
Connection	Category B	OTP/CPP/SGTP/TT	7874	1.20E-05	--	--	--	--	6.31E-04	lb/day-clp
Connection	Category C	OTP/CPP/SGTP/TT	104928	1.04E-05	--	--	--	--	5.47E-04	lb/day-clp
Connection	Category E	OTP/CPP/SGTP/TT	104925	9.58E-06	--	--	--	--	5.05E-04	lb/day-clp
Connection	Category F	OTP/CPP/SGTP/TT	9709	7.98E-06	--	--	--	--	4.21E-04	lb/day-clp
Compressor Seal	To VRS	OTP/CPP/SGTP/TT	6555	0.00E+00	--	--	--	--	0.00E+00	lb/day-clp
	Exempt	OTP/CPP/SGTP/TT	6557	0.00E+00	--	--	--	--	0.00E+00	lb/day-clp
Fugitive Components - Oil										
Valve	Accessible	OTP/CPP/SGTP/TT	1092	3.66E-06	--	--	--	--	3.59E-04	lb/day-clp
Valve	Inaccessible	OTP/CPP/SGTP/TT	1093	3.66E-06	--	--	--	--	3.59E-04	lb/day-clp
Valve	Bellows / Background ppmv	OTP/CPP/SGTP/TT	6558	0.00E+00	--	--	--	--	0.00E+00	lb/day-clp
Valve	Category B	OTP/CPP/SGTP/TT	7877	3.84E-05	--	--	--	--	3.77E-03	lb/day-clp
Valve	Category H	OTP/CPP/SGTP/TT	1094	2.56E-05	--	--	--	--	2.51E-03	lb/day-clp
Valve	Category H (Inaccessible)	OTP/CPP/SGTP/TT	5967	2.56E-05	--	--	--	--	2.51E-03	lb/day-clp
Connection	Accessible/Inaccessible	OTP/CPP/SGTP/TT	1095	1.52E-06	--	--	--	--	1.50E-04	lb/day-clp
Connection	Unsafe	OTP/CPP/SGTP/TT	7880	7.62E-06	--	--	--	--	7.48E-04	lb/day-clp
Connection	Category B	OTP/CPP/SGTP/TT	1096	1.14E-06	--	--	--	--	1.12E-04	lb/day-clp
Connection	Category F	OTP/CPP/SGTP/TT	9711	7.62E-07	--	--	--	--	7.48E-05	lb/day-clp
Pump Seal	Single	OTP/CPP/SGTP/TT	7879	3.35E-04	--	--	--	--	3.29E-02	lb/day-clp
Pump Seal	Dual/Tandem	OTP/CPP/SGTP/TT	6561	5.03E-05	--	--	--	--	4.94E-03	lb/day-clp
	Exempt	OTP/CPP/SGTP/TT	6563	0.00E+00	--	--	--	--	0.00E+00	lb/day-clp
Solvent Usage										
	Cleaning/Degreasing	OTP/CPP/SGTP/TT	5740	0.05	0.05	0.05	--	--		wt fraction

Table 5.8 Hazardous Air Pollutant Annual Emissions

Equipment Item	Description			HAP Emissions (tpy)					
		Exxon ID #	APCD DeviceNo	Benzene	Toluene	Xylene	Formaldehyde	PAH	Hexane
Combustion - Cogen Power Plant: Normal Operations Mode									
	Gas Turbine 38.63 MW	CPP/ZAN-2501	6585	1.91E-02	2.07E-01	1.02E-01	1.13E+00	3.51E-03	--
	Heat Recovery Steam Generator	CPP/EAL-2601	7865	3.10E-03	5.03E-03	--	1.11E-01	9.70E-04	2.66E+00
	Turbine Bypass Stack	CPP/ZAN-2501	7864	4.12E-07	4.46E-06	2.19E-06	2.43E-05	7.55E-08	--
Combustion - Cogen Power Plant: HRSG Only Mode									
	Heat Recovery Steam Generator	CPP/EAL-2601	7865	3.10E-03	5.03E-03	--	1.11E-01	9.70E-04	2.66E+00
Combustion - Cogen Power Plant: Planned Startup/Shutdown Mode									
	Combined CPP + Bypass Stacks (22 MW)	CPP/ZAN-2501/EAL-2601	7866	8.47E-08	9.18E-07	4.52E-07	5.01E-06	1.55E-08	--
SGTP - Incinerator									
	TGCU/Merox Vent Incinerator	SGTP/EAL-4602	7867	1.11E-04	1.80E-04	--	3.97E-03	3.47E-05	9.52E-02
	TGCU Incinerator (w/out Merox vent)	SGTP/EAL-4603	7868	1.08E-04	1.75E-04	--	3.87E-03	3.39E-05	9.29E-02
	Planned Startup/Shutdown/Maintenance	SGTP/EAL-4603	7869	1.07E-06	1.72E-06	--	3.80E-05	3.33E-07	9.13E-04
Combustion - Thermal Oxidizer									
	Purge and Pilot	OTP/EAW-1601	102738	4.33E-05	7.01E-05	--	1.55E-03	1.35E-05	3.71E-02
	Planned - Continuous LP	OTP/EAW-1601	102739	1.53E-05	2.48E-05	--	5.46E-04	4.78E-06	1.31E-02
	Planned - Continuous AG	OTP/EAW-1601	102740	2.55E-06	4.12E-06	--	9.10E-05	7.96E-07	2.18E-03
	Planned - Other	OTP/EAW-1601	102741	2.82E-02	4.57E-02	--	1.01E+00	8.83E-03	2.42E+01
	Unplanned - Other	OTP/EAW-1601	102742	1.14E-03	1.85E-03	--	4.07E-02	3.56E-04	9.77E-01
Crew Boat - Harmony/Heritage									
	Main Engines - con	Offshore (w/in 3-miles)	6515	2.45E-03	1.07E-03	7.48E-04	3.10E-03	4.41E-04	--
	Main Engines - Uncontrolled Spot Charter	Offshore (w/in 3-miles)	6564	1.63E-03	7.16E-04	4.99E-04	2.07E-03	2.94E-04	--
	Auxilliary Engines	Offshore (w/in 3-miles)	6516	4.08E-04	1.79E-04	1.25E-04	5.16E-04	7.35E-05	--

Equipment Item	Description			HAP Emissions (tpy)					
		Exxon ID #	APCD DeviceNo	Benzene	Toluene	Xylene	Formaldehyde	PAH	Hexane
Supply Boat - Harmony/Heritage									
	Main Engine - con	Offshore (w/in 3-miles)	6513	6.03E-04	2.65E-04	1.84E-04	7.63E-04	1.09E-04	--
	Main Engine - uncon	Offshore (w/in 3-miles)	7883	6.03E-05	2.65E-05	1.84E-05	7.63E-05	1.09E-05	--
	Generator Engine - uncon	Offshore (w/in 3-miles)	6514	1.72E-04	7.56E-05	5.27E-05	2.18E-04	3.10E-05	--
	Bow Thruster - uncon	Offshore (w/in 3-miles)	7884	2.51E-05	1.10E-05	7.68E-06	3.18E-05	4.53E-06	--
	Winch - uncon	Offshore (w/in 3-miles)	103247	2.06E-05	9.02E-06	6.28E-06	2.60E-05	3.70E-06	--
Compressor Vent									
	SOV Distance Piece Vent	OTP/CZZ-1301	7881	1.40E-03	--	--	--	--	1.85E-02
	VRU Distance Piece Vent	OTP/CZZ-1302/1303	7882	1.40E-03	--	--	--	--	1.85E-02
Pigging Equipment									
	Emulsion Pig Receiver	TT	6565	1.16E-06	--	--	--	--	1.53E-05
Tanks/Sumps/Separators									
	Oil Storage Tank A (vrs1)	TT/ABJ-3401A	6566	8.83E-02	5.15E-02	--	--	--	3.61E-01
	Oil Storage Tank B (vrs1)	TT/ABJ-3401B	6567	8.83E-02	5.15E-02	--	--	--	3.61E-01
	Area Drain Oil/Water Separator (cc)	TT/ABH-3402	6572	4.56E-04	2.66E-03	--	--	--	1.86E-03
	Area Drain Sump	TT/ABH-3403	6580	4.63E-03	2.70E-02				1.89E-02
	Rerun Tank A (vrs)	OTP/ABJ-1401A	6570	7.59E-03	4.42E-03	--	--	--	3.10E-02
	Rerun Tank B (vrs)	OTP/ABJ-1401B	6571	7.59E-03	4.42E-03	--	--	--	3.10E-02
	Equalization Tank 1424 (vent scbr/cc)	OTP/ABJ-1424	6573	2.76E-02	1.61E-02	--	--	--	1.13E-01
	Demulsifier Tank	OTP/ABJ-1402	6583	1.36E-03	7.90E-04	--	--	--	5.54E-03
	Oily Sludge Thickener (vrs)	OTP/ABJ-1423	6574	2.59E-03	--	--	--	--	1.06E-02
	Backwash Sump (vrs)	OTP/ABH-1442	6575	4.47E-04	--	--	--	--	1.83E-03
	Backwash Collection Tank (vrs)	OTP/ABH-1421	7885	1.62E-04	--	--	--	--	6.62E-04
	Open Drain Sump (cc)	OTP/ABH-1413	6576	4.22E-04	--	--	--	--	1.72E-03
	Area Drain Sump	OTP/ABH-1414	6581	3.03E-02	--	--	--	--	1.24E-01
	Area Drain Oil/Water Separator (cc)	OTP/ABH-1415	6577	8.11E-04	--	--	--	--	3.31E-03
	Area Drain Sump	SGTP/ABH-4405	6582	2.93E-03	--	--	--	--	1.20E-02
	Area Drain Oil/Water Separator (cc)	SGTP/ABH-4406	6578	4.59E-04	--	--	--	--	1.87E-03
	Open Drain Sump (cc)	SGTP/ABH-4407	6579	5.02E-05	--	--	--	--	2.05E-04
	Chemical Storage Tote Tanks	Various	7886	2.71E-03	1.58E-03	--	--	--	--

Equipment Item	Description			HAP Emissions (tpy)					
		Exxon ID #	APCD DeviceNo	Benzene	Toluene	Xylene	Formaldehyde	PAH	Hexane
Fugitive Components - Gas									
Valve	Accessible	OTP/CPP/SGTP/TT	1097	8.92E-04	--	--	--	--	4.71E-02
Valve	Inaccessible	OTP/CPP/SGTP/TT	1098	1.36E-03	--	--	--	--	7.18E-02
Valve	Unsafe	OTP/CPP/SGTP/TT	7870	1.13E-02	--	--	--	--	5.94E-01
Valve	Bellows / Background ppmv	OTP/CPP/SGTP/TT	6551	0.00E+00	--	--	--	--	0.00E+00
Valve	Category A	OTP/CPP/SGTP/TT	6474	1.88E-03	--	--	--	--	9.91E-02
Valve	Category B	OTP/CPP/SGTP/TT	7872	6.59E-03	--	--	--	--	3.47E-01
Valve	Category C	OTP/CPP/SGTP/TT	104929	2.35E-03	--	--	--	--	1.24E-01
Valve	Category E	OTP/CPP/SGTP/TT	104926	1.60E-02	--	--	--	--	8.43E-01
Valve	Category F	OTP/CPP/SGTP/TT	9710	3.05E-04	--	--	--	--	1.61E-02
Valve	Category H	OTP/CPP/SGTP/TT	1099	1.25E-02	--	--	--	--	6.59E-01
Valve	Category H (Inaccessible)	OTP/CPP/SGTP/TT	1100	8.69E-04	--	--	--	--	4.58E-02
Valve	Category I	OTP/CPP/SGTP/TT	6475	8.17E-03	--	--	--	--	4.31E-01
Connection	Accessible/Inaccessible	OTP/CPP/SGTP/TT	1101	2.82E-02	--	--	--	--	1.49E+00
Connection	Unsafe	OTP/CPP/SGTP/TT	6568	6.74E-03	--	--	--	--	3.56E-01
Connection	Category B	OTP/CPP/SGTP/TT	7874	2.43E-02	--	--	--	--	1.28E+00
Connection	Category C	OTP/CPP/SGTP/TT	104928	3.50E-04	--	--	--	--	1.85E-02
Connection	Category E	OTP/CPP/SGTP/TT	104925	3.00E-03	--	--	--	--	1.58E-01
Connection	Category F	OTP/CPP/SGTP/TT	9709	8.01E-05	--	--	--	--	4.23E-03
Compressor Seal	To VRS	OTP/CPP/SGTP/TT	6555	0.00E+00	--	--	--	--	0.00E+00
	Exempt	OTP/CPP/SGTP/TT	6557	0.00E+00	--	--	--	--	0.00E+00
Fugitive Components - Oil									
Valve	Accessible	OTP/CPP/SGTP/TT	1092	1.77E-04	--	--	--	--	1.74E-02
Valve	Inaccessible	OTP/CPP/SGTP/TT	1093	4.00E-06	--	--	--	--	3.93E-04
Valve	Bellows / Background ppmv	OTP/CPP/SGTP/TT	6558	0.00E+00	--	--	--	--	0.00E+00
Valve	Category B	OTP/CPP/SGTP/TT	7877	1.40E-05	--	--	--	--	1.38E-03
Valve	Category H	OTP/CPP/SGTP/TT	1094	2.23E-03	--	--	--	--	2.19E-01
Valve	Category H (Inaccessible)	OTP/CPP/SGTP/TT	5967	8.40E-05	--	--	--	--	8.25E-03
Connection	Accessible/Inaccessible	OTP/CPP/SGTP/TT	1095	1.85E-03	--	--	--	--	1.82E-01
Connection	Unsafe	OTP/CPP/SGTP/TT	7880	1.39E-06	--	--	--	--	1.37E-04
Connection	Category B	OTP/CPP/SGTP/TT	1096	2.25E-05	--	--	--	--	2.21E-03
Connection	Category F	OTP/CPP/SGTP/TT	9711	2.78E-07	--	--	--	--	2.73E-05
Pump Seal	Single	OTP/CPP/SGTP/TT	7879	2.45E-04	--	--	--	--	2.40E-02
Pump Seal	Dual/Tandem	OTP/CPP/SGTP/TT	6561	4.13E-04	--	--	--	--	4.05E-02
	Exempt	OTP/CPP/SGTP/TT	6563	0.00E+00	--	--	--	--	0.00E+00
Solvent Usage									
	Cleaning/Degreasing	OTP/CPP/SGTP/TT	5740	5.00E-02	5.00E-02	5.00E-02	--	--	--
		Total HAPs:		**0.51**	**0.48**	**0.15**	**2.42**	**0.02**	**38.94**

Table 5.9 Estimated Exempt Emissions

Annual

Item	Equipment Category	NOx	ROC	CO	SOx	PM	PM10
4	Small Fork Lift DP30	0.01	0.00	0.00	0.00	0.00	0.00
5	Lark Fork Lift DP70	0.24	0.02	0.05	0.03	0.02	0.02
6	30 ton crane	0.46	0.03	0.10	0.05	0.03	0.03
7	Manlift	0.07	0.00	0.02	0.01	0.00	0.00
8	Backhoe	0.01	0.00	0.00	0.00	0.00	0.00
9	Compressor	0.61	0.04	0.13	0.07	0.04	0.04
10	Compressor	0.18	0.01	0.04	0.02	0.01	0.01
11	Compressor	0.06	0.00	0.01	0.01	0.00	0.00
12	Power Pack	0.55	0.04	0.12	0.06	0.04	0.04
13	60 Ton Crane	0.05	0.00	0.01	0.01	0.00	0.00
14	Crane	0.09	0.01	0.02	0.01	0.01	0.01
15	Helicopters	0.00	0.00	0.00	0.00	0.00	0.00
16	Surface Coating-Maintenance	0.00	6.00	0.00	0.00	0.91	0.13
17	Abrasive Blasting	0.00	0.00	0.00	0.00	0.00	0.00
	Totals (TPY)	**2.33**	**6.16**	**0.50**	**0.26**	**1.08**	**0.30**

Table 5.10 Facility Net Emissions Increase (NEI-90)

I. This Projects "I" NEI-90

Permit No.	Date Issued	NOx lb/day	NOx ton/yr	ROC lb/day	ROC ton/yr	CO lb/day	CO ton/yr	SOx lb/day	SOx ton/yr	PM lb/day	PM ton/yr	PM10 lb/day	PM10 ton/yr
ATC/PTO 13039		**0.00**	**0.00**	**0.31**	**0.06**	**0.00**	**0.00**	**0.00**	**0.00**	**0.00**	**0.00**	**0.00**	**0.00**

II. This Facility's "P1s"
Enter all facility "P1" NEI-90s below:

Permit No.	Date Issued	NOx lb/day	NOx ton/yr	ROC lb/day	ROC ton/yr	CO lb/day	CO ton/yr	SOx lb/day	SOx ton/yr	PM lb/day	PM ton/yr	PM10 lb/day	PM10 ton/yr
PTO 5651	1/11/2000	1,003.14	98.56	877.74	68.83	546.68	87.00	228.92	40.67	288.75	47.78	236.82	38.52
ATC/PTO 10990	5/1/2003			3.07	3.80								
ATC/PTO 11322	1/4/2005	5.79	1.06	0.32	0.06	4.87	0.89	20.39	3.72	0.44	0.08	0.44	0.08
Totals		**1008.93**	**99.62**	**881.13**	**72.69**	**551.55**	**87.89**	**249.31**	**44.39**	**289.19**	**47.86**	**237.26**	**38.60**

Notes:
(1) Facility NEI from IDS.
(2) Totals only apply to permits for this facility ID. Totals may not appear correct due to rounding.
(3) Because of rounding, values in this table shown as 0.00 are less than 0.005, but greater than zero.

III. This Facility's "P2" NEI-90 Decreases
Enter all facility "P2" NEI-90s below:

Permit No.	Date Issued	NOx lb/day	NOx ton/yr	ROC lb/day	ROC ton/yr	CO lb/day	CO ton/yr	SOx lb/day	SOx ton/yr	PM lb/day	PM ton/yr	PM10 lb/day	PM10 ton/yr
ATC/PTO 11410	3/7/2005			4.335	0.791								
ATC/PTO 11170	4/2/2004			10.703	1.953								
Part 70 PTO 5651-01	12/1/2003		1.041		0.00		0.252		0.130		0.129		0.124
Totals		**0.00**	**1.04**	**15.04**	**2.74**	**0.00**	**0.25**	**0.00**	**0.13**	**0.00**	**0.13**	**0.00**	**0.12**

Notes:
(1) Facility NEI from IDS.
(2) Totals only apply to permits for this facility ID. Totals may not appear correct due to rounding.
(3) Because of rounding, values in this table shown as 0.00 are less than 0.005, but greater than zero.

IV. This Facility's Pre-90 "D" Decreases
Enter all facility "D" decreases below:

Permit No.	Date Issued	NOx lb/day	NOx ton/yr	ROC lb/day	ROC ton/yr	CO lb/day	CO ton/yr	SOx lb/day	SOx ton/yr	PM lb/day	PM ton/yr	PM10 lb/day	PM10 ton/yr
Totals		**0.00**	**0.00**	**0.00**	**0.00**	**0.00**	**0.00**	**0.00**	**0.00**	**0.00**	**0.00**	**0.00**	**0.00**

Notes:
(1) Facility "D" from IDS.
(2) Totals only apply to permits for this facility ID. Totals may not appear correct due to rounding.
(3) Because of rounding, values in this table shown as 0.00 are less than 0.005, but greater than zero.

V. Calculated This Facility's NEI-90
Table below summarizes facility NEI-90 as equal to: I+ (P1-P2) -D

Term	NOx lb/day	NOx ton/yr	ROC lb/day	ROC ton/yr	CO lb/day	CO ton/yr	SOx lb/day	SOx ton/yr	PM lb/day	PM ton/yr	PM10 lb/day	PM10 ton/yr
Project "I"	0.00	0.00	0.31	0.06	0.00	0.00	0.00	0.00	0.00	0.00	0.00	0.00
P1	1008.93	99.62	881.13	72.69	551.55	87.89	249.31	44.39	289.19	47.86	237.26	38.60
P2	0.00	1.04	15.04	2.74	0.00	0.25	0.00	0.13	0.00	0.13	0.00	0.12
D	0.00	0.00	0.00	0.00	0.00	0.00	0.00	0.00	0.00	0.00	0.00	0.00
FNEI-90	**1008.93**	**98.58**	**866.40**	**70.01**	**551.55**	**87.64**	**249.31**	**44.26**	**289.19**	**47.73**	**237.26**	**38.48**

Notes:
(1) Resultant FNEI-90 from above Section I thru IV data.
(2) Totals only apply to permits for this facility ID. Totals may not appear correct due to rounding.
(3) Because of rounding, values in this table shown as 0.00 are less than 0.005, but greater than zero.

6.0 Air Quality Impact Analysis

6.1. Modeling

A detailed modeling analysis was performed with the issuance of ATC 5651 (11/19/87) and ATC 5651-17 (1/27/99). This operating permit summarizes the key results of those analyses.

The following sub-sections summarize the operational impacts predicted by the models.

6.1.1 Compliance with Ambient Air Quality Standards: Inert pollutant concentrations from operation of the ExxonMobil SYU Development onshore and associated offshore facilities were estimated using the OCDCPM model and the Industrial Source Complex (ISCST) model for the updated modeling. The OCDCPM model is a hybrid of the Offshore and Coastal Dispersion (OCD) model developed by the Minerals Management Service (MMS), and the Environmental Protection Agency's (EPA) COMPLEX I and MPTER air quality simulation models. Production emissions for both offshore and onshore sources were analyzed in accordance with the APCD's Modeling Protocol. The following pollutants were analyzed for compliance with the ambient air quality standards:

- Nitrogen dioxide (NO_2);
- Total suspended particulate matter (TSP);
- Particulate matter smaller than 10 microns (PM_{10});
- Carbon monoxide (CO);
- Sulfur dioxide (SO_2);
- Reactive organic compounds (ROC);
- Hydrogen sulfide (H_2S); and
- Sulfates (SO_4)

Photochemical modeling to determine project-specific ozone (O_3) impacts was not carried out as part of the ATC process. However, analyses in the Supplemental EIR for ATC 5651 (11/19/87) that used the TRACE photochemical model, concluded that project emissions of the precursor pollutants, NO_x and ROC, could result in significant increases in ozone. These potential impacts have been addressed through ExxonMobil's commitment of appropriate NO_x and ROC offsets as discussed in Section 7.0.

Pre-construction monitoring data collected for one year at Las Flores Canyon Sites A and B were used to establish background pollutant levels. For NO_x, a revised background value was used for the 1-hour standard analysis that reflects more current information. Air quality data collected at other monitoring sites in the general area of the proposed project were used to fill in values missing from the Las Flores Canyon data set for certain pollutants. These background data were reviewed as part of the ATC analysis. Table 6.1 shows the background air quality values.

The background levels of O_3 and NO_2 (one-hour averages) were used to estimate project NO_2 impacts by the Ozone Limiting Method (*Cole and Summerhays, 1979*).

Existing emission sources were reviewed to determine whether any would affect the area of the proposed project during its installation or operation. The existing POPCO gas treating plant was identified as an existing source emitting CO, NO_2, SO_2, ROC, PM_{10}, and TSP. POPCO was modeled according to APCD procedures.

6.1.2 Production Impacts from Onshore Project Components: Impacts from the stripping gas treating facility, the oil treating plant, the cogeneration power plant, the transportation terminal and the emission increases associated with increased throughput at the existing POPCO gas treating plant were evaluated using the OCDCPM model as specified in the Modeling Protocol. Emission sources assessed for short-term standard compliance included normal production activities at each facility (including the CPP Startup/Shutdown Mode) and tests of emergency equipment (fire water pumps) at the ExxonMobil facility. All anticipated annual flaring emissions were included in the analyses which were performed to assess compliance with annual standards. Concentrations were predicted for an array of receptors placed outside the property line of the facility. The internal spacing of the receptors was 125 to 250 meters. Table 6.1 shows the onshore production phase impacts.

Emissions from ExxonMobil's proposed onshore production facilities will not cause standard exceedances during routine operations; however, onshore production emissions of PM_{10} will contribute to an existing exceedance of the state PM_{10} (24-hour) standard. To address this exceedance, ExxonMobil has participated in a particulate concentration reduction and mitigation study and is required to implement control measures resulting from this study to the maximum extent feasible.

Sulfate impacts from the proposed project were also examined. Sulfate formation in the atmosphere results from a complex series of reactions involving sulfur oxide (SO_x) emissions, airborne concentrations of oxidizing species, relative humidity, and metal catalysts, among other factors. The rate of oxidation of SO_2 to sulfate in urban areas such as Los Angeles has been shown to vary from a few percent per hour to levels in excess of 10 percent per hour (*Levy A, et al, 1986*). For this analysis, a sulfur conversion rate of 6 percent per hour (*Bay Area Air Quality Management District, 1986*) was used. Modeled results were added to the maximum ambient 24-hour SO_4 background measured at El Capitan Beach between March 1985 and February 1986, and that total was compared to the state 24-hour SO_4 standard of 25 $\mu g/m^3$. The maximum ambient 24-hour background at the El Capitan monitor during this period was 16.0 $\mu g/m^3$.

Modeling results indicated a maximum onshore project-related 24-hour SO_2 impact of 34 $\mu g/m^3$. This value was converted to a 24-hour sulfate impact of 2.0 $\mu g/m^3$. After addition of a background concentration of 16 $\mu g/m^3$, the maximum expected sulfate concentration would be 18.0 $\mu g/m^3$. This maximum is below the state 24-hour sulfate standard of 25 $\mu g/m^3$.

The ISCST model was used to determine peak ambient H_2S concentrations from components of the proposed project containing sour gas. Maximum concentrations of 23 $\mu g/m^3$ were predicted. This concentration is below the California standard of 42 $\mu g/m^3$.

6.1.4 Production Impacts from Offshore Project Components: Two scenarios were analyzed for ExxonMobil's offshore production. The first included operations at the nearshore marine terminal. That scenario, however, is no longer applicable since ExxonMobil de-permitted the tankering option of ATC 5651 in 1995. The second scenario included drilling and production at the platforms. A cumulative scenario was also modeled, since Platform Harmony lies almost directly offshore of two permitted projects: GTC's Gaviota marine terminal and the Point Arguello Project's Gaviota oil and gas facility.

Impacts from drilling and production at Platforms Harmony and Heritage were evaluated using the reasonable worst-case meteorological data set prescribed by the Modeling Protocol. These

maximum onshore concentrations, which Table 6.2 summarizes, are due to emissions from Platform Harmony alone.

Cumulative emissions associated with operations at the Point Arguello Project's facility in Gaviota as well as the GTC Interim Marine Terminal near Gaviota were modeled with drilling/production emissions from Platform Harmony. Table 6.3 gives the maximum predicted concentrations using the offshore one-hour meteorological data set. Background levels reported in Table 6.3 reflect those expected in the Gaviota area. These levels are reported in the ATC for the Gaviota Interim Marine Terminal (*Gaviota Terminal Company, Final Decision Document, Authority to Construct Permit, 1987*). Platform Harmony emissions were predicted to contribute 54 percent of the concentration at the worst-case receptor. The maximum pollutant contributions from the cumulative projects include emissions from the old GTC marine terminal as well as emissions from the new GTC facility. Since the older marine terminal was built prior to the PSD baseline, only the emissions from the terminal expansion occurring after the baseline will consume PSD increment. The PSD increment consumption analysis is given in Section 6.2.

6.1.5 Unplanned Flaring from Onshore Project Components: Four scenarios for flaring from onshore facilities were identified for modeling. These scenarios include combinations of possible events identified in the emission calculations. They are expected to result in worst-case impacts and include:

(a) Stripping gas treating plant shutdown caused by refrigeration unit failure. A refrigeration unit shutdown would result in the loss of cooling in the Deethanizer Tower overhead condenser. Since reflux would no longer be condensed, the tower and reflux drum pressure would begin to increase. Flaring would then occur to release pressure from the tower and its associated equipment. This event is expected to occur once a year and would result in flaring 63.5 KSCF of gas with a sulfur content of 3.6 percent by volume. This scenario represents the worst-case flaring event for the oil treating plant.

(b) Sulfur plant shutdown at the stripping gas treating facility. A sulfur plant shutdown can be caused by an air blower failure, a low liquid level in the waste heat reclaimer, a combustor flame failure, etc. In such circumstances, sour gas feed would be blocked off from the sulfur plant, causing a pressure increase in the upstream tail gas treating solvent regenerator and tail gas unit sour water stripper. The pressure control system on the regenerator would automatically divert the sour off-gas directly to the thermal oxidizer. The regenerator would continue to operate manually. This event is expected to occur once every three months and to result in flaring 18.5 KSCF of gas with a sulfur content of 67.9 percent by volume. This is the worst-case scenario for the stripping gas treating plant.

(c) Scheduled maintenance flaring. Scheduled maintenance is expected during the purging of the stripping gas treating plant. This would occur four times a year and would result in the flaring of 600 KSCF per event. Once a year, a 100-KSCF flaring event would result from scheduled maintenance of the crude and condensate stabilizer at the oil treating plant.

(d) Off-spec fuel gas production at the stripping gas treating facility. Off-spec fuel gas production could be caused by a loss of treating solvent circulation due to solvent pump failure, solvent flow control valve closure, loss of solvent regenerator heat, etc. The failure of the gas treating system would result in off-spec fuel gas, which would be flared rather than routed to the cogeneration power plant and the oil treating plant. This event is

estimated to occur twice a year and would result in the flaring of 162.5 KSCF of gas. The gas would have an average sulfur content of 3.3 percent by volume. This unplanned flaring event is the largest volume that would be flared.

Maximum predicted concentrations from onshore flaring events were modeled by using the OCDCPM model with the Las Flores Canyon meteorological data set. The predicted levels for the four onshore scenarios are reported in Tables 6.4 through 6.7. In all four scenarios, exceedances of the state 1-hour SO_2 standard are predicted. Exceedance of the federal 3-hour and 24-hour SO_2 standards are also predicted for Scenarios (b) and (d). PM_{10} emissions will be insignificant contributors to existing California standard exceedance, while no exceedances are predicted for NO_2 or CO. In order to mitigate these projected air quality standard exceedances, ExxonMobil is required to fund a study to identify feasible measures to reduce flaring emissions.

6.1.6 Unplanned Flaring from Offshore Project Components: Emergency flaring at the platform was evaluated with the OCDCPM model using the worst-case offshore meteorological data set described earlier in Section 6.1.1. This is expected to occur 48 times a year and would result in flaring 260.5 KSCF of gas, with a sulfur content of 2.8 percent by volume. Table 6.8 indicates that exceedances of the state 1-hour and 24-hour SO_2 standards are predicted to occur. Contribution to the existing PM_{10} standard exceedance would be insignificant. No standard exceedance would occur for NO_2 or CO.

6.1.7 Consolidation in Las Flores Canyon: Condition XII-3a of the FDP requires that ExxonMobil demonstrate that the consolidation of facilities at specified throughputs in Las Flores Canyon is feasible without violating AAQS. ARCO oil and gas company submitted an ATC application to the District in July 1986 for oil and gas processing facilities to be consolidated with ExxonMobil's and POPCO's facilities in Las Flores Canyon. Since ARCO's facilities when combined with ExxonMobil were a close match to the specified operating limits in the FDP condition, the ARCO facility was modeled to show compliance with the condition. Although ARCO's application was subsequently deemed incomplete, modeling this project also meets the District requirements to perform an AQIA that includes all reasonably foreseeable projects.

The ARCO emission rates were obtained from the most recent ATC application tables dated 21 May 1987. The ARCO stack parameters and locations were primarily obtained from ATC application tables dated 22 February 1987 and personal communication from R. MacArthur, SAI.

Table 6.9, which shows the results, indicates that no standard violations are expected to occur. Due to the background levels, the state 24-hr PM_{10} standard is exceeded; however, the federal standard would not be violated.

6.2. Increments

This section discusses increment consumption during the operation phase. Project components within APCD jurisdiction (both onshore and offshore) consume increment for NO_2, SO_2, TSP, PM_{10}, CO, and ROC. Emergency equipment that operates on an intermittent basis for a limited period of time was not included in increment consumption calculations. This category includes firewater pump tests as well as unscheduled flaring events. CPP Startup/Shutdown operations are also not included.

When conducting increment consumption analysis, all new emissions occurring after the baseline date must be included as already consuming part of the available increment. For SO_2 and PM, the

PSD baseline date in Santa Barbara County is 7 August 1978. Since the POPCO facility was constructed in 1983, all of the permitted (60 MSCFD) SO_2 and PM emissions from the facility must be included in the increment analysis. However, for CO, NO_2, ROC, and PM_{10}, the baseline date is 1 January 1984. Consequently, only the potential increases from the initial processing level (30 MSCFD) to the total permitted level (60 MSCFD) must be included in the analysis as part of the increment consumed to date.

Table 6.10 shows the results of the increment consumption analysis for the ExxonMobil SYU expansion project. This table reports the maximum increments from the ExxonMobil project emissions. The required fees will be reduced by 10 percent per year in accordance with APCD rules. Increment fees cannot be used in place of other fees required under APCD Rules and Regulations.

In addition to the increment analysis done for Las Flores Canyon, a cumulative analysis was done for sources in the Gaviota area. A portion of the emissions included in the cumulative analysis would also consume PSD increment. This cumulative scenario was modeled for offshore production impacts and included emissions from Platform Harmony, the GTC marine terminal and the Chevron Gaviota Plant. Emissions from both the existing GTC marine terminal and the proposed expansion were included in the analysis for compliance with AAQS. However, the existing GTC marine terminal was constructed prior to the PSD baseline date for SO_2 and TSP, so do not consume increment. If emissions from the existing GTC terminal are excluded, then applicable increment consumption values would be 114 $\mu g/m^3$ for 3-hour SO_2, 65 $\mu g/m^3$ for 24-hour SO_2, 16 $\mu g/m^3$ annual SO_2, 27 $\mu g/m^3$ 24-hour TSP and 11 $\mu g/m^3$ annual TSP. None of these concentrations exceed the applicable PSD limits for SO_2 or TSP.

6.3. Vegetation and Soils Analysis

Use of the land in the general area of the project includes cattle forage and growth of specialty and row crops. Studies have indicated that at sufficient concentration and duration, ambient air pollutants, specifically SO_2 and NO_2, can injure vegetation. For SO_2, injury thresholds range from 1300-2600 ug/m^3 for one hour for sensitive plants and greater than 5200 ug/m^3 for more resistant plants. The maximum hourly ambient concentration of SO_2 expected during operation of the facility would be approximately 523 $\mu g/m^3$, which is below the thresholds cited above.

The maximum hourly NO_2 for operation was predicted to be 814 $\mu g/m^3$. As stated in the previous ATC, leaf symptoms have been observed at 3007-4887 $\mu g/m^3$ NO_2 for 2-day exposures and 37,588 $\mu g/m^3$ NO_2 for 1-hour exposures. Thus, the predicted concentration is well below the injury threshold and no vegetation injury is expected.

The effect of SO_2 and NO_x emissions on soils was examined. During production, total project emissions were estimated to be 341 tons/yr and 337 tons/yr for SO_2 and NO_x, respectively. Deposition on the surrounding soil will be minimal, based on the large project area over which the pollutants are dispersed and the distance from offshore sources to shore. The pronounced alkalinity of the soils will ameliorate the effects of the minor decrease in pH expected from sulfate or nitrate deposition. No long-term buildup of deposition products is expected because of use of these compounds by existing vegetation. No heavy metals or other toxic substances are anticipated to be emitted from the ExxonMobil facilities. Thus, the project is not anticipated to cause any adverse impacts on surrounding soils.

6.4. Potential to Impact Visibility and Opacity

A level-1 methodology as described in EPA's Workbook for Estimating Visibility Impairment was used to calculate visibility impacts for the project. This methodology estimates three contrast parameters: plume contrast against sky (C1), plume contrast against terrain (C2), and change in sky/terrain contrast (C3). The San Rafael Wilderness Area, located approximately 35 km from the project site, is the closest Class I PSD area for which a visibility analysis is required. The background visual range for this area was assumed to be 25 km. Operation emissions from both the nearshore and onshore project components were included in the estimate of visibility impacts.

The analysis showed that the values of the three constant parameters are well below the critical screening value of 0.10 (C1=0.016, C2=0.012, and C3=.000). These results indicate that the activities will have no significant effects on visibility in the San Rafael Wilderness Area.

Opacity impacts were also examined. During the production and operation phase, opacity violations could potentially result from flaring, sand blasting, or firewater pump operation. The potential for these exceedances will be minimized through the use of smokeless flares and through proper maintenance procedures. Sand-blasting operations must use certified materials. Potential opacity violations from other combustion sources will be minimized with maintenance and inspection programs.

6.5. Health Risk Assessment

The *Exxon – Santa Ynez Unit* stationary source is subject to the Air Toxics 'Hot Spots' Program (AB 2588). As required by AB 2588, a health risk assessment (HRA) for the Las Flores Canyon facility was prepared by the APCD on March 28, 1995. The HRA is based on 1993 emissions and was prepared by the APCD at the request of ExxonMobil.

Based on the 1993 air toxics emission inventory, a cancer risk of 6 per million at the property boundary (UTM location 771981 East, 3818027 North) was estimated for the Las Flores Canyon facility. The risk is primarily due to benzene and carcinogenic polycyclic aromatic hydrocarbon (PAH) emissions from a thermal oxidizer. Emissions of hydrazine also contribute to the cancer risk estimate. Hydrazine is emitted from a steam generation/steam injection system. The 1993 facility-wide annual emissions of benzene, PAH and hydrazine were 180, 15.1 and 1.71 pounds per year, respectively.

In addition, an acute non-cancer hazard index of 0.3 and a chronic non-cancer hazard index of 0.1 have been estimated by the APCD (both under the significance threshold of 1.0). The acute and chronic risks are due to ammonia emissions and their effect on the respiratory system endpoint. About 18.3 tons per year, and a maximum of 5.5 pounds per hour of ammonia were emitted from the *Exxon – Santa Ynez Unit* stationary source in 1993.

6.6. Public Nuisance

Historically, oil and gas processing facilities handling high sulfur crude oil within the County of Santa Barbara have been the subject of numerous public complaints regarding odors and other related public nuisance factors. Based on these experiences, it was considered necessary to evaluate the potential for public nuisance from the proposed facility. Emissions from the operation phases of the project were reviewed to determine compliance with APCD Rules 205.A and 303, which relate to the prevention of public nuisance as required by Section 41700 of the State Health and Safety Code.

Emissions of reduced sulfur compounds during facility operation have the potential to cause a public nuisance. Sources of the reduced sulfur compounds are the amine units, the sulfur recovery unit, the tail gas cleanup unit, and fugitive emissions from gas and oil handling facilities.

Additionally, operations involving piping for handling sour gas with an H_2S content greater than 825 ppm will trigger classification as a "Potentially Hazardous Emission Area" in accordance with County Ordinance 2832. For petroleum operations in such potentially hazardous emission areas, a plan for detecting and monitoring emissions is required and operations must be conducted so that the ambient H_2S concentration does not exceed the values set forth in Ordinance 2832 for the protection of public health. Ordinance 2832 is also triggered by petroleum facilities "in the vicinity of any residence or place of public gathering which could affect the safety or well being of others." Places of public gathering in the vicinity of ExxonMobil facilities include Refugio and El Capitan State Beaches. However, reduced sulfur concentrations substantially lower than those specified in the Ordinance can cause a public nuisance.

In Section 6.1.3 of ATC 5651 (11/19/87), the predicted level of H_2S (23 $\mu g/m^3$) was below the state standard of 42 $\mu g/m^3$. However, this peak level would exceed the human odor threshold of 0.7 $\mu g/m^3$ (*SCAQMD EIR Handbook, Appendix M*). Thus, it is likely that odors will be detectable from the facility. As a result, an odor monitoring program as specified in Section 9.C and as described in Section 4.15 is required.

Table 6.1 Maximum Concentrations from Onshore Production Facilities in Las Flores Canyon (μg/m^3)

Pollutant	Averaging Time	Project Contribution	Background	Total	Ambient Standard	Location, (km) X	Y
NO_2	1-hr	431	14	445	470	771.00	3,819.50
	Annual	12	6	18	100	771.99	3,818.02
PM_{10}	24-hr	12	61	73 [(a)]	50	772.59	3,818.91
	Annual	2	24	26	30	772.11	3,818.15
CO	1-hr	1,583	2,629	4,212	23,000	772.55	3,819.12
	8-hr	598	1,966	2,564	10,000	772.35	3,818.53
SO_2	1-hr	304	133	437	655	771.00	3,819.50
	3-hr	294	100	394	1,300	771.05	3,819.50
	24-hr	47	28	75	131	771.05	3,819.62
	Annual	11	5	16	80	771.99	3,818.02
SO_4	24-hr	2	16	18	25	771.08	3,819.62
H_2S	1-hr	23	-- [(b)]	23	42	771.19	3,820.00

Notes

(a) Project contribution of PM_{10} adds to an existing California standard exceedance. However, predicted levels are below federal standard of 150 ug/m^3.

(b) H_2S background was assumed to be negligible.

(c) Maximum 1-hour NO_x impact due to CPP Startup/Shutdown operations.

(d) SO_2 1-hour, 3-hour and 24-hour values linear scaled from original modeling results.

(e) NO_x 1-hour remodeled per ATC/PTO 5651-01 (5/27/99).

Table 6.2 Maximum Concentrations from Platform Emissions (μg/m^3)

Pollutant	Averaging Time	Project Contribution	Background	Total	Ambient Standard	Location, (km) X	Y
NO_2	1-hr	359	45	404	470	758.81	3,818.05
	Annual	36	6	42	100	758.81	3,818.05
PM_{10}	24-hr	12	61	73 [(a)]	50	758.81	3,818.05
	Annual	3	24	27	30	758.81	3,818.05
CO	1-hr	87	2,629	2,716	23,000	758.81	3,818.05
	8-hr	61	1,966	2,007	10,000	758.81	3,818.05
SO_2	1-hr	26	133	159	655	758.81	3,818.05
	3-hr	24	100	124	1,300	758.81	3,818.05
	24-hr	10	28	38	131	758.81	3,818.05
	Annual	3	5	8	80	758.81	3,818.05

Notes

(a) Project contribution of PM_{10} adds to an existing California standard exceedance. However, predicted levels are below federal standard of 150 ug/m^3.

Table 6.3 Maximum Cumulative Onshore Concentrations (μg/m^3)

Pollutant	Averaging Time	Project Contribution[(b)]	Background[(c)]	Total	Ambient Standard	Location, (km) X	Y
NO_2	1-hr	289	70	359	470	756.52	3,818.80
PM_{10}	24-hr	38	58	96[(d)]	50	756.52	3,818.80
CO	1-hr	340	8,000	8,340	23,000	756.46	3,819.00
	8-hr	306	2,663	4,935	10,000	756.46	3,819.00
SO_2	1-hr	270	47	317	655	755.42	3,820.00
	3-hr	189	35	224	1,300	755.42	3,820.00
	24-hr	108	10	118	131	755.42	3,820.00

Notes

(a) Scenario includes Platform Harmony production as well as operation of the GTC marine terminal and Chevron USA oil and gas treating facilities near Gaviota.

(b) Includes contribution from existing GTC marine terminal, which do not consume PSD increment.

(c) Background values monitored in the Gaviota area and used in the GTC and Chevron ATC permitting analysis.

(d) Project contribution to PM_{10} adds to an existing California standard exceedance. However, predicted levels are below the federal AAQS of 150 ug/m^3.

Table 6.4 Maximum Concentrations for Onshore Flaring Scenario A (μg/m^3)

Pollutant	Averaging Time	Project Contribution	Background	Total	Ambient Standard	Location, (km) X	Y
NO_2	1-hr	130	45	175	470	772.41	3,818.63
PM_{10}	24-hr	< 1	61	61[(a)]	50	772.41	3,818.63
CO	1-hr	9	2,629	2,638	23,000	772.41	3,818.63
	8-hr	1	1,966	1,967	10,000	772.41	3,818.63
SO_2	1-hr	1,432	133	1,565	655	772.41	3,818.63
	3-hr	477	100	577	1,300	772.41	3,818.63
	24-hr	60	28	88	131	772.41	3,818.63

Notes

(a) Project contribution to PM_{10} adds to an existing California standard exceedance. However, predicted levels are below the federal AAQS of 150 ug/m^3.

Table 6.5 Maximum Concentrations for Onshore Flaring Scenario B (μg/m^3)

Pollutant	Averaging Time	Project Contribution	Background	Total	Ambient Standard	Location, (km) X	Y
NO_2	1-hr	64	45	109	470	772.12	3,817.90
PM_{10}	24-hr	< 1	61	61[(a)]	50	772.12	3,817.90
CO	1-hr	16	2,629	2,645	23,000	772.12	3,817.90
	8-hr	2	1,966	1,968	10,000	772.12	3,817.90
SO_2	1-hr	52,308	133	52,441	655	772.12	3,817.90
	3-hr	17,436	100	17,536	1,300	772.12	3,817.90
	24-hr	533	28	561	131	772.12	3,817.90

Notes

(a) Project contribution to PM_{10} adds to an existing California standard exceedance. However, predicted levels are below the federal AAQS of 150 ug/m^3.

Table 6.6 Maximum Concentrations for Onshore Flaring Scenario C (μg/m^3)

Pollutant	Averaging Time	Project Contribution	Background	Total	Ambient Standard	Location, (km) X	Y
NO_2	1-hr	171	45	216	470	772.41	3,818.63
PM_{10}	24-hr	< 1	61	61[(a)]	50	771.28	3,821.33
CO	1-hr	16	2,629	2,645	23,000	772.41	3,818.63
	8-hr	2	1,966	1,968	10,000	772.41	3,818.63
SO_2	1-hr	577	133	710	655	772.41	3,818.63
	3-hr	192	100	292	1,300	772.41	3,818.63
	24-hr	24	28	52	131	771.28	3,821.33

Notes

(a) Project contribution to PM_{10} adds to an existing California standard exceedance. However, predicted levels are below the federal AAQS of 150 ug/m^3.

Table 6.7 Maximum Concentrations for Onshore Flaring Scenario D (μg/m^3)

Pollutant	Averaging Time	Project Contribution	Background	Total	Ambient Standard	Location, (km) X	Y
NO_2	1-hr	360	45	405	470	772.41	3,818.63
PM_{10}	24-hr	< 1	61	61[(a)]	50	772.18	3,818.39
CO	1-hr	28	2,629	2,657	23,000	772.41	3,818.63
	8-hr	4	1,966	1,970	10,000	772.35	3,818.53
SO_2	1-hr	3,911	133	4,044	655	772.41	3,818.63
	3-hr	1,304	100	1,404	1,300	772.41	3,818.63
	24-hr	163	28	191	131	772.18	3,818.39

Notes

(a) Project contribution to PM_{10} adds to an existing California standard exceedance. However, predicted levels are below the federal AAQS of 150 ug/m^3.

Table 6.8 Maximum Concentrations for Offshore Flaring Scenario ($\mu g/m^3$)

Pollutant	Averaging Time	Project Contribution	Background	Total	Ambient Standard	Location, (km) X	Y
NO_2	1-hr	387	45	432	470	771.24	3,818.13
PM_{10}	24-hr	< 1	61	61[(a)]	50	771.24	3,818.13
CO	1-hr	48	2,629	2,677	23,000	771.24	3,818.13
	8-hr	6	1,966	1,972	10,000	771.24	3,818.13
SO_2	1-hr	5,690	133	5,823	655	771.24	3,818.13
	3-hr	1,896	100	1,996	1,300	771.24	3,818.13
	24-hr	237	28	265	131	771.24	3,818.13

Notes

(a) Project contribution to PM10 adds to an existing California standard exceedance. However, predicted levels are below the federal AAQS of 150 ug/m^3.

Table 6.9 Maximum Concentrations for Consolidated Onshore Facilities ($\mu g/m^3$)

Pollutant	Averaging Time	Project Contribution	Background	Total	Ambient Standard	Location, (km) X	Y
NO_2	1-hr	392	45	437	470	771.08	3,819.37
	Annual	45	6	51	100	772.11	3,818.15
PM_{10}	24-hr	13	61	74[(b)]	50	771.19	3,820.13
	Annual	4	24	26	30	771.99	3,818.02
CO	1-hr	1,583	2,629	4,212	23,000	772.59	3,819.16
	8-hr	629	1,966	2,595	10,000	772.35	3,818.53
SO_2	1-hr	346	133	479	655	772.59	3,818.91
	3-hr	282	100	382	1,300	772.11	3,818.15
	24-hr	51	28	79	131	772.59	3,818.91
	Annual	15	5	20	80	772.11	3,818.15

Notes

(a) This scenario includes ExxonMobil, POPCO, (60 MSCFD gas production rate) and ARCO facilities in Las Flores Canyon.

(b) Project contribution to PM_{10} adds to an existing California standard exceedance. However, predicted levels are below the federal AAQS of 150 ug/m^3.

Table 6.10 Increment Analysis ($\mu g/m^3$)

Pollutant	Averaging Time	Project Maximum Increment Consumed	Increment Consumed to Date (1993)[a]	Total Increment Consumed	Allowable Increment
NO_2	1-hr	363.0[b]	0.0	363.0	100-470[d]
	Annual	7.0[c]	5.0	12.0	25-100[d]
TSP	24-hr	13.5[c]	0.6	14.1	37
	Annual	3.0[c]	0.1	3.1	19
PM_{10}	24-hr	10.8[c]	0.3	11.1	12-50
CO	1-hr	1,471.0[c]	7.0	1,573.0	10,000
	8-hr	590.0[c]	2.0	594.0	2,500
SO_2	3-hr	105.0[c]	172.0	277.0	512
	24-hr	19.0[c]	26.0	45.0	91
	Annual	5.6[c]	6.7	12.3	20
ROC	3-hr	457.0[c]	0.2	457.2	40-160[d]

Notes

(a) Increment consumed to date includes contributions from both the existing POPCO facility and contributions from emissions increases associated with increasing production to permitted capacity.

(b) Maximum project increment consumption due to nearshore marine terminal operations.

(c) Maximum project increment consumption due to onshore production sources.

(d) Increment fee is based on maximum increment consumption by project contribution above lower end of increment range.

-- This page left blank intentionally --

7.0 CAP Consistency, Offset Requirements and ERCs

7.1. General

Santa Barbara County has been classified as non attainment for the state eight-hour ozone standard as well as the state 24-hour and annual PM_{10} ambient air quality standards. The County is either in attainment of or unclassified with respect to all other state ambient air quality standards.

Santa Barbara County's air quality has historically violated federal ozone standards. Since 1999, however, local air quality data show that every monitoring location in the County complied with the federal one-hour ambient air quality standard for ozone. The Santa Barbara County Air Pollution Control District adopted the 2001 Clean Air Plan (2001 CAP) that demonstrated attainment of the federal one-hour ozone standard and continued maintenance of that standard through 2015. Consequently, on August 8, 2003, the United States Environmental Protection Agency (USEPA) designated Santa Barbara County as an attainment area for the federal one-hour ozone standard.

On June 15, 2004, USEPA replaced the federal one-hour ozone standard with an eight-hour ozone standard. This eight-hour ozone standard, originally promulgated by USEPA on July 18, 1997, was set at 0.08 parts per million measured over eight hours and is more protective of public health and more stringent than the federal one-hour standard. In March 2008, USEPA lowered that standard to 0.075 parts per million. While USEPA has yet to formally designate Santa Barbara County with respect to the 0.075 parts per million standard, the state has recommended to USEPA that Santa Barbara County be designated as attainment.

Therefore, emissions from all emission units at the stationary source and its constituent facilities must be consistent with the provisions of the USEPA and State approved Clean Air Plans (CAP) and must not interfere with progress towards attainment or maintenance of federal and state ambient air quality standards. Under APCD regulations, any modifications at the source that result in an emissions increase of any nonattainment pollutant exceeding 25 lbs./day must apply BACT (NAR). Additional increases will trigger offsets at the source or elsewhere so that there is a net air quality benefit for Santa Barbara County. These offset threshold levels are 55 lbs/day for all non-attainment pollutants except PM_{10} for which the level is 80 lbs/day. These thresholds apply to net emissions increases since November 15, 1990 as defined in District Rule 801. The Exxon – SYU Project has already exceeded the offset thresholds.

7.2. Clean Air Plan

On August 16, 2007, the APCD Board adopted the 2007 Clean Air Plan to chart a course of action that provided for ongoing maintenance of the federal eight-hour ozone standard through the year 2014 as well as the expeditious attainment of the state one-hour ozone standard. These plans were developed for Santa Barbara County as required by both the

1998 California Clean Air Act and the 1990 Federal Clean Air Act Amendments. Santa Barbara County has now attained the state one-hour ozone standard but does not attain the state eight-hour ozone standard.

In 2010 the APCD will update those provisions of the 2007 Clean Air Plan which demonstrate expeditious attainment of the state eight-hour ozone standard. No changes will be made to the 2007 Clean Air Plan sections which demonstrate continued maintenance of the federal eight-hour ozone standard.

7.3. Offset Requirements

7.3.1 NEI Offsets: Under APCD rules, ExxonMobil is required to provide offsets for the project's operational net emission increase for NO_x, ROC, PM, PM_{10} and SO_2. In order to demonstrate a net air quality benefit, offsets have been adjusted to account for the distance between the project source and the offset source.

ExxonMobil shall offset the maximum quarterly NO_x, ROC, SO_x, PM_{10} and PM net emission increase associated with the operation of the *Exxon – SYU Project* as documented in Table 5.2 of this permit. Emission offsets for the operations phase are required to be in place, as specified in Tables 7.1, 7.2, 7.3 and 7.4, and shall remain in place for the duration of the project as required by APCD rules and the conditions of this permit.

7.3.2 ESE Offsets: In order to make the finding of net air quality benefit and to assure reasonable further progress toward attainment of the federal ozone standard and to comply with FDP Condition XII-3.b, ExxonMobil is required by this permit to offset the SYU Expansion Project's Entire Source Emissions (ESE) for NO_x and ROC by reducing emissions at existing sources by an equal amount. ExxonMobil is required by this permit to offset the NO_x and ROC entire source emissions from the SYU Project at a ratio of 1 to 1. This requirement is necessary for the APCD to make the determination that the entire project provides a net air quality benefit to Santa Barbara County, does not impede reasonable further progress toward attainment of the ozone standards and is consistent with the APCD-approved AQAP. Table 7.5 provides a listing of the offsets that ExxonMobil is using to cover its NO_x and ROC ESE liability. Due to the large offset ratios required for the NEI liability, ExxonMobil has offsets in excess of its ESE requirements. Table 7.6 shows how these excess offsets will be used. There are no excess ESE or NEI ERCs available for future use.

7.4. Emission Reduction Credits

7.4.1 ATC 9651, PTO 9651: ExxonMobil has generated 1.56 tons per year of ROC ERCs in order to offset emission increases from compressor skid projects at Platforms Harmony and Heritage (PTO 9640 and PTO 9634 respectively). These ERCs were created by implementation of an Enhanced Fugitive Hydrocarbon I&M Program – monthly monitoring of valves. ATC 9651 and PTO 9651 were issued to ensure the reductions were enforceable. The requirements of those permits are included in this permit.

7.4.2 DOI No. 0002/ERC Certificate No. 0004: On January 20, 1998 ExxonMobil obtained ERC Certificate No. 0004 (DOI No. 0004) for 0.18 tpq of ROCs. These ERCs were assigned to increased ROC fugitive emissions from gas pipeline project topsides tie-ins at Platforms Harmony and Heritage (ATC 9827, ATC 9828) respectively. The APCD issued ATC/PTO 9826

to ensure that the modifications (an Enhanced Fugitive Hydrocarbon I&M Program – monthly monitoring of valves) were enforceable. The Certificate was retired from the Source Register in whole on January 20, 1998. The requirements of that permit are included in this permit.

7.4.3 DOI No. 0034/ERC Certificate No. 0115-1009: On October 13, 2004 ExxonMobil obtained ERC Certificate No. 0115-1009 (DOI No. 0034) for 0.488 tpq of ROCs. These ERCs were assigned to increased ROC fugitive emissions from the gas expansion project at Platform Heritage (ATC 11132 Mod 02). The APCD issued ATC/PTO 11170 to ensure that the modifications (an Enhanced Fugitive Hydrocarbon I&M Program – decreased leak detection threshold) were enforceable. The Certificate was retired from the Source Register in whole on November 1, 2004. The requirements of that permit are included in this permit.

7.4.4 DOI No. 0040/ERC Certificate No. 0126-0310: On March 23, 2005 ExxonMobil obtained ERC Certificate No. 0126-0310 (DOI No. 0040) for 0.198 tpq of ROCs. These ERCs were assigned to increased ROC fugitive emissions from the gas expansion project at Platform Heritage (ATC 11132 Mod 02). The APCD issued ATC/PTO 11410 to ensure that the modifications (an Enhanced Fugitive Hydrocarbon I&M Program – decreased leak detection threshold) were enforceable. The Certificate was retired from the Source Register in whole on March 23, 2005. The requirements of that permit are included in this permit.

Table 7.1 NOx Emission Offset Requirements

Oxides of Nitrogen (NOx) [a]

NEI EMISSIONS FROM PROJECT	Oxides of Nitrogen	
	TPQ	TPY
Las Flores Canyon [b]	26.39	98.56
Total NEI:	**26.39**	**98.56**

EMISSION REDUCTION SOURCES (NEI)	Emission Reductions		Distance Factor [c]	Offset Credit	
	TPQ	TPY		TPQ	TPY
1. OS&T Shutdown	7.00	28	1.2	5.83	23.33
2. Carpinteria Gas Plant [d]					
Cooper/Ingersoll Rand Compressors					
- Exxon's Portion (IR)	7.25	29	2.6	2.79	11.15
- ARCO's Portion (Cooper)	24.00	96	2.6	9.23	36.92
3. Platform Hope Cooper Compressor (partial)	8.00	32	2.6	3.08	12.31
4. Hondo Crew Boat Reductions	6.50	26	1.2	5.42	21.67
5. Shell Molino Waukesha/White Compressors	5.00	20	1.2	4.17	16.67
6. Utility Displacement Credit	4.00	16.00	1.0	4.00	16.00
Total Offsets:[e]	**61.75**	**247.00**		**34.51**	**138.05**

Notes:

[a] NO_x as NO_2

[b] See Section 5 for a detailed listing of SYU Project emissions due to operation.

[c] Ratios set according to District Guidelines and based on source distance from the SYU project. The discounted offset values shown are the undiscounted offset values divided by the discount ratio.

[d] Exxon and ARCO are all shareholders in the Carpinteria Gas Plant. Both partners have committed their listed shares of emission reduction credits from controls of this gas plant to the SYU project.

[e] Amount of NEI ERCs provided exceed NEI liability. Excess may not be used for new or modified projects. New or modified projects require ERCs from the Source Register per Regulation VIII.

Table 7.2 ROC Emission Offset Requirements

Reactive Organic Compounds (ROC)

NEI EMISSIONS FROM PROJECT	Reactive Organic Compounds	
	TPQ	TPY
Las Flores Canyon [a]	17.38	68.83
Phase III Oil	0.44	1.75
Phase III Wastewater	0.09	0.34
De Minimis Transfer	0.140	0.560
De Minimis Transfer - ATC 13039	0.014	0.056
Total NEI:	**18.04**	**71.54**

EMISSION REDUCTION SOURCES (NEI)	Emission Reductions		Distance Factor [b]	Offset Credit	
	TPQ	TPY		TPQ	TPY
1. OS&T Shutdown [c]	1.25	5.00	1.2	1.04	4.17
2. Carpinteria Gas Plant Fugitive I&M	12.25	49.00	2.6	4.71	18.85
3. Platform Hilda Fugitive I&M	8.75	35.00	2.2	3.98	15.91
4. Platform Heidi Fugitive I&M	3.25	13.00	2.6	1.25	5.00
5. Platform Hazel Fugitive I&M	7.75	31.00	2.2	3.52	14.09
6. Hondo Crew Boat Reductions	0.75	3.00	1.2	0.63	2.50
7. ARCO Seep Containment Project (partial)	3.75	15.00	1.2	3.13	12.50
8. Utility Displacement Credit	0.25	1.00	1.0	0.25	1.00
9. ERC Certificates: McGhan Shutdowns[d]	0.6090	2.4360	1.5	0.4060	1.6240
10. ERC Certificates: Bioenterics Shutdowns[e]	0.6570	2.6280	1.5	0.4380	1.7520
11. ERC Certificate: Grefco Shutdown[f]	0.6400	2.5600	6.0	0.1067	0.4267
12 ERC Certificate 0128-1009: LFC Fugitive I&M	0.0170	0.0680	1.2	0.0142	0.0567
Total Offsets:[g]	**39.92**	**159.69**		**19.47**	**77.87**

Notes:

[a] See Section 5 for a detailed listing of SYU Project emissions due to operation.

[b] Ratios set according to District Guidelines and based on source distance from the SYU project. The discounted offset values shown are the undiscounted offset values divided by the discount ratio.

[c] OS&T shutdown emissions to be used to offset crew boat emissions within the District only (remaining ERCs may only be applied to non-NEI OCS liability). Total of 2.93 tpy used for Hondo Topsides Integration Project (Ref: PTO 9100).

[d] ERCs generated due the shutdown of McGhan Medical Corporation's Carpinteria and Lompoc facilities: #0079 and #0080.

[e] ERC Certificate #0081 is for ERCs generated due the shutdown of BioEnterics Corporation facility at 1035 Cindy Lane in Carpinteria.

[f] ERC Certificate #0083 is for ERCs generated due the shutdown of Grefco's Lompoc diatomaceous earth processing plant.

[g] Amount of NEI ERCs provided exceed NEI liability. Excess may not be used for new or modified projects. New or modified projects require ERCs from the Source Register per Regulation VIII.

Table 7.3 SOx Emission Offset Requirements

Oxides of Sulfur (SOx)[a]

NEI EMISSIONS FROM PROJECT	Oxides of Sulfur	
	TPQ	TPY
Las Flores Canyon [b]	11.67	40.67
POPCO ATC 9047-4 [c]	3.36	13.45
Total NEI:	**15.03**	**54.12**

EMISSION REDUCTION SOURCES (NEI)	Emission Reductions		Distance Factor [d]	Offset Credit	
	TPQ	TPY		TPQ	TPY
1. OS&T Shutdown [e]	15.56	62.25	1.2	12.97	51.88
Total Offsets:[f]	**15.56**	**62.25**		**12.97**	**51.88**

Notes:

[a] SOx as SO_2

[b] See Section 5 for a detailed listing of SYU Project emissions due to operation.

[c] Exxon is required to maintain the excess SOx ERCs (undiscounted) in reserve for a period of three years from the issuance of the PTO to cover any unexpected SOx emission liability from the project flaring emissions.

[d] Ratios set according to District Guidelines and based on source distance from the SYU project. The discounted offset values shown are the undiscounted offset values divided by the discount ratio.

[e] OS&T shutdown emissions based on SOx re-qualification calculation performed for ATC 5651-05 (Table 7-3) to address Rule 359 requirements of the OCS Platforms and LFC. Of the 102.30 tpy, 40.05 is used for a SOx to PM interpollutant trade and 63.09 tpy is used for OCS platforms for compliance with Rule 359 (165.39 - 40.05 - 63.09 = 62.25).

[f] Amount of NEI ERCs provided exceed NEI liability. Excess may not be used for new or modified projects, except for flaring for which up to 13.45 TPY (Undiscounted) of SOx ERCs may be used for no more than 3 years after the date of PTO issuance. New or modified projects require ERCs from the Source Register per Regulation VIII.

Table 7.4 PM Emission Offset Requirements

Particulate Matter (PM)

NEI EMISSIONS FROM PROJECT	Particulate Matter	
	TPQ	TPY
Las Flores Canyon [a]	12.08	47.78
Total NEI:	**12.08**	**47.78**

EMISSION REDUCTION SOURCES (NEI)	Emission Reductions		Distance Factor [b]	Offset Credit	
	TPQ	TPY		TPQ	TPY
1. OS&T Shutdown	3.00	12.00	1.2	2.50	10.00
2. SO_x to PM Mitigation [c]	10.01	40.05	1.2	8.34	33.38
3. Hondo Crew Boat Reductions	1.00	4.00	1.2	0.83	3.33
4. Hondo and OS&T Supply Boat Reductions	0.25	1.00	1.2	0.21	0.83
5. Hondo Turbines	0.25	1.00	1.2	0.21	0.83
Total Offsets:[d]	**14.51**	**58.05**		**12.09**	**48.38**

Notes:

[a] See Section 5 for a detailed listing of SYU Project emissions due to operation.

[b] Ratios set according to District Guidelines and based on source distance from the SYU project. The discounted offset values shown are the undiscounted offset values divided by the discount ratio.

[c] Inter-Pollutant trade of SOx for PM at a 1:1 ratio.

[d] Amount of NEI ERCs provided exceed NEI liability. Excess may not be used for new or modified projects. New or modified projects require ERCs from the Source Register per Regulation VIII.

Table 7.5 ESE Project Operation Emissions and Offsets

Entire Source Emissions

ESE EMISSIONS FROM PROJECT		NOx [a]	ROC
		TPY	TPY
Santa Ynez Expanison Project [b]		370.19	201.23
De Minimis Transfer			3.803
De Minimis Transfer - 2009			0.560
Total		**370.19**	**205.59**

EMISSION REDUCTION SOURCES (ESE)	NOx [a]	ROC
1. OS&T Shutdown	308.00	147.00
2. Hondo Turbine Reductions	14.00	--
3. Hondo and OS&T Supply Boat Reductions [c]	0.00	2.00
4. Hondo Crew Boat Reductions	56.00	7.00
5. Carpinteria Gas Plant		
Cooper/Ingersoll Rand Compressors		
- Exxon's Portion (IR)	29.00	--
- ARCO's Portion (Cooper)	96.00	--
6. Utility Displacement Credit	16.00	1.00
7. Platform Hilda Fugitive I&M	--	35.00
8. Platform Hope Cooper Compressor (partial)	32	--
9. Platform Heidi Fugitive I&M	--	13.00
10. Platform Hazel Fugitive I&M	--	31.00
11. Carpinteria Gas Plant Fugitive I&M	--	49.00
12. Shell Molino Waukesha/White Compressors	20.00	--
13. ARCO Seep Containment Project (partial)	--	15.00
14. ERC Certificates: McGhan Shutdowns		2.436
15. ERC Certificates: Bioenterics Shutdowns		2.628
16. ERC Certificate: Grefco Shutdown		2.560
17 ERC Certificate: LFC Fugitive I&M		0.068
Total ESE Offsets:	**571.00**	**307.69**
Disposition of Excess ESE Offsets:[d]	108.00	146.93
Excess/Shortfall ESE ERC Offsets:	92.81	-48.16
Excess ESE Offsets remaining due to IP Trade of Nox for ROC at ratio 1.927:	0.00	0.00
New Excess ESE Offsets:[e]	**0.00**	**3.329**

Notes:

[a] NO_x as NO_2

[b] See Section 5 for a detailed listing of SYU Project emissions due to operation.

[c] Reductions of NOx from the supply boats did not occur.

[d] Excess ESE Offsets at time of the initial Part 70 Permit to Operate/APCD Permit to Operate (2000) were applied to several projects as described in Table 7.6 of the Part 70 PTO 5651/PTO 5651 issued in 2000.

[e] Amount of ESE ERCs provided exceed ESE liability. Excess ESE ERC distribution per Table 7.6. New or modified projects require ERCs from the Source Register per Regulation VIII.

Table 7.6 Disposition of Excess NOx and ROC ESE ERCs

Entire Source Emissions

Disposition Sources	Nox[a]	ROC
	TPY	TPY
1. Offsets provided to the Hondo De Minimis Transfer (ATC/PTO 10991)	--	1.177
2. Offsets provided to the POPCO De Minimis Transfer (ATC/PTO 11001)	--	0.143
Total Offset:	**0.00**	**1.320**
Excess/Shortfall ESE ERC Offsets:	0.00	2.501

Notes:

[a] NO_x as NO_2

Table 7.7 Exxon – SYU Offset Sources for the Entire Source Emissions (ESE)

Source #	Source Description	Location	Contract Duration	Emission Control Measure	Uncontrolled Emission Rate		Controlled Emission Rate		Control Efficiency		Available Offset Credit		Portion Utilized by Exxon	
					(tons/year)		(tons/year)		%		(tons/year)		(tons/year)	
					NOx	ROC	NOx	ROC	NOx	ROC	NOx	ROC	NOx	ROC
1	Ingersoll Rand Gas Fired I.C. Engine Compressor #1 -440 HP	CGP	ATC Issuance through Project Life	Pre-Stratified Charge	23	--	4	--	82.6	--	19	--	9	--
2	Ingersoll Rand Gas Fired I.C. Engine Compressor #3 -440 HP	CGP	ATC Issuance through Project Life	Pre-Stratified Charge	51	--	13	--	74.5	--	38	--	20	--
3	Cooper-Bessemer Gas Fired I.C. Engine Compressor 1350 bhp	CGP	10/1/1991 through Project Life	Clean Burn Combustion Modification (Low NOx Heads)	199	--	6	--	97	--	193	--	96	--
4	Cooper-Bessemer Gas Fired I.C. Engine Compressor 1450 HP	Platform Hope	OS&T Decommissioning through Project Life	Clean Burn Combustion Modification (Low NOx Heads)	253	--	24	--	90.5	--	229	--	32	--
5	White-Superior Gas Fired I.C. Engine Compressor 320 bhp	SMGP	7/1/1989 through Project Life	Non-selective Catalytic Converter	9	--	1	--	90	--	8	--	5	--
6	Waukesha Gas Fired I.C. Engine Compressor 880 bhp	SMGP	7/1/1989 through Project Life	Non-selective Catalytic Converter	24	--	2	--	90	--	22	--	15	--
7	Fugitive I&M Programs	SWP Hazel	ATC Issuance through Project Life	I&M Program	79		17		78		62			31
		SWP Heidi			86		19		78		67			13
		SWP Hilda			90		20		78		70			35
		CGP			237		53		78		184			49
8	ARCO Seep Containment[a]	Offshore Ellwood	ATC Issuance through Project Life	Capture Device	--	NA	--	0	--	100	--	2,464	--	15
9	Hondo Crew Boat[b]	Ellwood	1/1/1988 through Project Life	Ignition Timing Retard/Reduced Trips	76	11	20	4	NA	NA	56	7	56	7
10	OS&T(c)	Offshore El Capitan State Park	OS&T Decommissioning through Project Life	Shutdown	308	147	0	0	NA	NA	308	147	308	147
11	Hondo Turbines[c]	Offshore El Capitan State Park	ATC Issuance through Project Life	Electrification	14	--	0	--	100	--	14	--	14	--
12	Hondo and OS&T[d] Supply Boats	Port Hueneme	1/1/1988 through Project Life	n/a	6		4		NA NA		2			2

Notes

(a) The 15 tons is the portion committed to the operational phase. The available offset credit is dependent upon the quarterly amount of hydrocarb

(b) Crew boats are required to meet 8.4 g/hp-hr and Exxon has committed to reducing boat trips to 2 per day. The uncontrolled emission rate was estimated from three years (1984-1986) of fuel use data.

(c)The uncontrolled emission rate was estimated from three years (1984-1986) of fuel use data.

(d) The original permit assumed that the supply boat engines were uncontrolled for NOx, however that was not the case.

8.0 Lead Agency Permit Consistency

8.1. Prior Lead Agency Action

The Preliminary Development Plan (PDP) for the ExxonMobil SYU Project was approved by the Santa Barbara County Board of Supervisors on September 3, 1986. The Final Development Plan (FDP) was issued by the Santa Barbara County Planning Commission on September 15, 1987. In this FDP approval, the Planning Commission included permit conditions (XII-3, 5, 8, 11, and 17) requiring ExxonMobil to fully mitigate adverse air quality impacts of the project which would affect the County. ExxonMobil is also required to satisfy other lead agency air quality conditions prior to issuance of the land use permit. The following is a summary of the major lead agency air quality conditions and their relationship to the APCD evaluation and decision on this project.

1. FDP Condition XII-2 - Authority to Construct: Requirement for an Authority to Construct (ATC) prior to any construction, including grading begins. The issuance of the APCD ATC Permit (before construction) fulfilled this condition.

2. FDP Condition XII-3.a - Consolidation: Requirement for consolidation of facilities in Las Flores and Corral Canyons. The air quality impact analysis modeling (Section 6.1.8) performed as part of ATC 5651 showed no violations of air quality standards from the SYU project operating in conjunction with consolidated facilities in Las Flores and Corral Canyons, with the exception of exacerbating an existing violation of the 24-hour PM_{10} standard.

3. FDP Condition XII-3.b - Mitigation and Offsets of NO_x and ROC Emissions: Requirement for demonstration that all oxides of nitrogen and hydrocarbon emissions associated with the construction and operation of the SYU project are fully mitigated, permitted emissions onshore and in State waters are offset as applicable according to APCD rules, and total offsets for operation are equal to or greater than entire source emissions, including OCS sources. Section 2.3, Applicant Proposed Project Operating Assumptions of ATC 5651, and Section 6.1, Compliance with Ambient Air Quality Standards of ATC 5651, discussed the proposed mitigation. Section 7.0, Offset Requirements, discusses the offsets used as mitigation.

4. FDP Condition XII-4 - Odor: Requirement for project to be designed, constructed, operated and maintained so as to eliminate odors. Section 6.4, Public Nuisance, Section 4.14, Section 9.C includes enforceable permit condition language to ensure compliance.

5. FDP Condition XII-5 - Construction Mitigation: Requirement for mitigation of construction air quality impacts to the maximum extent feasible. Section 2.3, Applicant Proposed Project Operating Assumptions of ATC 5651, and Section 6.1, Compliance with Ambient Air Quality Standards of ATC 5651, discussed the mitigation and Section 7.1 of ATC 5651 discussed the offset requirements for construction.

6. FDP Condition XII-6 - Ambient Monitoring: Requirement for ambient air quality monitoring stations in numbers and locations specified by the air pollution control officer and for participation in the purchase, installation, operation, and maintenance of a central data acquisition system. Section 4.13, Operational and Regional Monitoring, and Permit Section 9.C.12 includes enforceable permit condition language to ensure compliance.

7. FDP Condition XII-7 - Operating Phase Episode Plan: Requirement for an operations-phase episode plan for sources within the APCD's jurisdiction. An Emergency Episode Plan is approved for the SYU stationary source. Permit Condition 9.C.37 requires that this plan be kept current every three years.

8. FDP Condition XII-8 - Operation Phase Mitigation: Requirement for implementation of mitigation measures contained in the project's EIS/EIR. Section 9.C incorporates the mitigation measures discussed in Section 2.3, Applicant Proposed Project Operating Assumptions of ATC 5651 and Section 6.1, Compliance with Ambient Air Quality Standards of ATC 5651.

9. FDP Condition XII-9 - Vapor Control System: Requirement for a vapor control system (VCS) to reduce marine vessel loading and storage tank emissions by 99.8 percent or more. The marine terminal is no longer part of the project. Section 9.C includes enforceable permit condition language to ensure compliance.

10. FDP Condition XII-11 - Vessel Reports: Requirement for submission of information as to the type and size of tankers and support boats used during the previous six months and estimates of anticipated use during the next six months. Tankers are no longer part of the project. Section 9.C includes enforceable permit condition language to ensure compliance.

11. FDP Condition XII-16 - Continuous Monitoring: Requirement for continuous monitoring and record keeping. Sections 4.11, *Continuous Emission Monitoring*, and 4.12, *Source Testing*, describe the requirements. Attachments 10.1 and 10.2 provide additional details on the CEM and source testing requirements. Section 9.C includes enforceable permit condition language to ensure compliance.

12. FDP Condition XII-17 - OS&T and SALM Dismantlement: Requirement that emissions from operation or dismantling of the OS&T and SALM, together with project and other source emissions, not violate any standards or increments and not interfere with reasonable further progress. Section 6.1, Compliance with Ambient Air Quality Standards of ATC 5651, indicated that no standard will be violated.

13. FDP Condition V-1 - Cogeneration Facility: Permits the cogeneration facility to operate with a minimum of 80 percent NO_x control, if sufficient offsets are provided. Section 4.2, *Cogeneration Power Plant*, discusses the cogeneration facility's NO_x control measures. Section 9.C includes enforceable permit condition language to ensure compliance.

8.2. Lead Agency Actions for PTO 5651

Pursuant CEQA Guidelines Section 15300.4 and Appendix A (*APCD List of Exempt Projects*) of the APCD's *Environmental Review Guidelines* document (10/95), the issuance of this Permit to Operate is exempt from CEQA.

9.0 Permit Conditions

This section lists the applicable permit conditions for the Las Flores Canyon (LFC) Oil Treating Plant, Stripping Gas Treating Plant, Cogeneration Power Plant, Transportation Terminal facilities and Marine Support Vessels that comprise the Santa Ynez Expansion Project. Section 9 contains the permit's enforceable requirements.

Section 9.A lists the standard administrative conditions. Section 9.B lists 'generic' permit conditions, including emission standards, for all equipment in this permit. Section 9.C lists conditions affecting specific equipment. Section 9.D lists non-federally enforceable (i.e., APCD only) permit conditions. Conditions listed in Sections A, B and C are enforceable by the USEPA, the APCD, the State of California and the public. Conditions listed in Section D are enforceable only by the APCD and the State of California. Where any reference contained in Sections 9.A, 9.B or 9.C refers to any other part of this permit, that part of the permit referred to is federally enforceable.

9.A Standard Administrative Conditions

A.1 **Condition Acceptance.** Acceptance of this operating permit by ExxonMobil shall be considered as acceptance of all terms, conditions, and limits of this permit. [*Re: ATC 5651, PTO 5651]*

A.2 **Grounds for Revocation.** Failure to abide by and faithfully comply with this permit or any Rule, Order, or Regulation may constitute grounds for revocation pursuant to California Health & Safety Code Section 42307 *et seq*. [*Re: ATC 5651, PTO 5651]*

A.3 **Defense of Permit.** ExxonMobil agrees, as a condition of the issuance and use of this permit, to defend at its sole expense any action brought against the APCD because of issuance of this permit. ExxonMobil shall reimburse the APCD for any and all costs including, but not limited to, court costs and attorney's fees which the APCD may be required by a court to pay as a result of such action. The APCD may, at its sole discretion, participate in the defense of any such action, but such participation shall not relieve ExxonMobil of its obligation under this condition. The APCD shall bear its own expenses for its participation in the action. [*Re: ATC 5651, PTO 5651]*

A.4 **Reimbursement of Costs**. All reasonable expenses, as defined in APCD Rule 210, incurred by the APCD, APCD contractors, and legal counsel for all activities that follow the issuance of this permit, including but not limited to permit condition implementation, compliance verification and emergency response, directly and necessarily related to enforcement of the permit shall be reimbursed by ExxonMobil as required by Rule 210. [*Re: ATC 5651, PTO 5651]*

A.5 **Access to Records and Facilities.** As to any condition that requires for its effective enforcement the inspection of records or facilities by the APCD or its agents, ExxonMobil shall make such records available or provide access to such facilities upon notice from the APCD. Access shall mean access consistent with California Health and Safety Code Section 41510 and Clean Air Act Section 114A. [*Re: ATC 5651, PTO 5651]*

A.6 **Conflicts Between Conditions.** In the event that any condition herein is determined to be in conflict with any other condition contained herein, then, if principles of law do not provide to the

contrary, the condition most protective of air quality and public health and safety shall prevail to the extent feasible. [*Re: ATC 5651, PTO 5651]*

A.7 **Compliance.** Nothing contained within this permit shall be construed to allow the violation of any local, State or Federal rule, regulation, ambient air quality standard or air quality increment. [*Re: ATC 5651, PTO 5651]*

A.8 **Consistency with Analysis.** Operation under this permit shall be conducted consistent with all data, specifications and assumptions included with the application and supplements thereof (as documented in the APCD's project file) and the APCD's analyses under which this permit is issued as documented in the Permit Analyses prepared for and issued with the permit. [*Re: ATC 5651, PTO 5651]*

A.9 **Consistency with State and Local Permits.** Nothing in this permit shall relax any air pollution control requirement imposed on the Santa Ynez Unit Project by:

(a) the County of Santa Barbara in Final Development Plan Permit 87-DP-32cz and any subsequent modifications; and,

(b) the California Coastal Commission in the consistency determination for the Project with the California Coastal Act.

[*Re: ATC 5651, PTO 5651]*

A.10 **Compliance with Permit Conditions.**

(a) The permittee shall comply with all permit conditions in Sections 9.A, 9.B and 9.C.

(b) This permit does not convey property rights or exclusive privilege of any sort.

(c) Any permit noncompliance with sections 9.A, 9.B, or 9.C constitutes a violation of the Clean Air Act and is grounds for enforcement action; for permit termination, revocation and re-issuance, or modification; or for denial of a permit renewal application.

(d) It shall not be a defense for the permittee in an enforcement action that it would have been necessary to halt or reduce the permitted activity in order to maintain compliance with the conditions of this permit.

(e) A pending permit action or notification of anticipated noncompliance does not stay any permit condition.

(f) Within a reasonable time period, the permittee shall furnish any information requested by the Control Officer, in writing, for the purpose of determining:

(i) compliance with the permit, or
(ii) whether or not cause exists to modify, revoke and reissue, or terminate a permit or for an enforcement action.

(g) In the event that any condition herein is determined to be in conflict with any other condition contained herein, then, if principles of law do not provide to the contrary, the condition most protective of air quality and public health and safety shall prevail to the extent feasible.

[*Re: 40 CFR Part 70.6.(a)(6), APCD Rules 1303.D.1]*

A.11 **Emergency Provisions.** The permittee shall comply with the requirements of the APCD, Rule 505 (Upset/Breakdown rule) and/or APCD Rule 1303.F, whichever is applicable to the emergency situation. In order to maintain an affirmative defense under Rule 1303.F, the permittee shall provide the APCD, in writing, a "notice of emergency" within two (2) working days of the emergency. The "notice of emergency" shall contain the information/documentation listed in Sections (1) through (5) of Rule 1303.F. [*Re: 40 CFR 70.6(g), APCD Rule 1303.F*]

A.12 **Compliance Plans.**

(a) The permittee shall comply with all federally enforceable requirements that become applicable during the permit term in a timely manner.

(b) For all applicable equipment, the permittee shall implement and comply with any specific compliance plan required under any federally-enforceable rules or standards.

[*Re: APCD Rule 1302.D.2*]

A.13 **Right of Entry.** The Regional Administrator of USEPA, the Control Officer, or their authorized representatives, upon the presentation of credentials, shall be permitted to enter upon the premises where a Part 70 Source is located or where records must be kept:

(a) To inspect the stationary source, including monitoring and control equipment, work practices, operations, and emission-related activity;

(b) To inspect and duplicate, at reasonable times, records required by this Permit to Operate;

(c) To sample substances or monitor emissions from the source or assess other parameters to assure compliance with the permit or applicable requirements, at reasonable times. Monitoring of emissions can include source testing.

[*Re: APCD Rule 1303.D.2*]

A.14 **Severability.** The provisions of this Permit to Operate are severable and if any provision of this Permit to Operate is held invalid, the remainder of this Permit to Operate shall not be affected thereby. [*Re: APCD Rules 103 and 1303.D.1*]

A.15 **Permit Life.** The Part 70 permit shall become invalid three years from the date of issuance unless a timely and complete renewal application is submitted to the APCD. Any operation of the source to which this Part 70 permit is issued beyond the expiration date of this Part 70 permit and without a valid Part 70 operating permit (or a complete Part 70 permit renewal application) shall be a violation of the CAAA, § 502(a) and 503(d) and of the APCD rules.

The permittee shall apply for renewal of the Part 70 permit no later than 6 months before the date of the permit expiration. Upon submittal of a timely and complete renewal application, the Part 70 permit shall remain in effect until the Control Officer issues or denies the renewal application. [*Re: APCD Rule 1304.D.1*]

A.16 **Payment of Fees.** The permittee shall reimburse the APCD for all its Part 70 permit processing and compliance expenses for the stationary source on a timely basis. Failure to reimburse on a timely basis shall be a violation of this permit and of applicable requirements and can result in forfeiture of the Part 70 permit. Operation without a Part 70 permit subjects the source to

potential enforcement action by the APCD and the USEPA pursuant to section 502(a) of the Clean Air Act. [*Re: APCD Rules 1303.D.1 and 1304.D.11, 40 CFR 70.6(a)(7*)]

A.17 **Prompt Reporting of Deviations.** The permittee shall submit a written report to the APCD documenting each and every deviation from the requirements of this permit or any applicable federal requirements within seven (7) days after discovery of the violation, but not later than 6 months after the date of occurrence. The report shall clearly document 1) the probable cause and extent of the deviation 2) equipment involved, 3) the quantity of excess pollutant emissions, if any, and 4) actions taken to correct the deviation. The requirements of this condition shall not apply to deviations reported to APCD in accordance with Rule 505. Breakdown Conditions, or Rule 1303.F Emergency Provisions. *[APCD Rule 1303.D.1, 40 CFR 70.6(a) (3)]*

A.18 **Reporting Requirements/Compliance Certification.** The permittee shall submit compliance certification reports to the USEPA and the Control Officer every six months. These reports shall be submitted on APCD approved forms and shall identify each applicable requirement/condition of the permit, the compliance status with each requirement/condition, the monitoring methods used to determine compliance, whether the compliance was continuous or intermittent, and include detailed information on the occurrence and correction of any deviations from permit requirement. The reporting periods shall be each half of the calendar year, e.g., January through June for the first half of the year. These reports shall be submitted by September 1st and March 1st, respectively, each year. Supporting monitoring data shall be submitted in accordance with the "Semi-Annual Compliance Verification Report" condition in Section 9.C. The permittee shall include a written statement from the responsible official, which certifies the truth, accuracy, and completeness of the reports. [*Re: APCD Rules 1303.D.1, 1302.D.3, 1303.2.c*]

A.19 **Federally Enforceable Conditions.** Each federally enforceable condition in this permit shall be enforceable by the USEPA and members of the public. None of the conditions in the APCD-only enforceable section of this permit are federally enforceable or subject to the public/USEPA review. [*Re: CAAA § 502(b)(6), 40 CFR 70.6(b*)]

A.20 **Recordkeeping Requirements**. The permittee shall maintain records of required monitoring information that include the following:

(a) The date, place as defined in the permit, and time of sampling or measurements;
(b) The date(s) analyses were performed;
(c) The company or entity that performed the analyses;
(d) The analytical techniques or methods used;
(e) The results of such analyses; and
(f) The operating conditions as existing at the time of sampling or measurement;

The records (electronic or hard copy), as well as all supporting information including calibration and maintenance records, shall be maintained for a minimum of five (5) years from date of initial entry by the permittee and shall be made available to the APCD upon request. [*Re: APCD Rule 1303.D.1.f, 40 CFR 70.6(a)(3)*]

A.21 **Conditions for Permit Reopening.** The permit shall be reopened and revised for cause under any of the following circumstances:

(a) Additional Requirements: If additional applicable requirements (e.g., NSPS or MACT) become applicable to the source which has an unexpired permit term of three (3) or more years, the permit shall be reopened. Such a reopening shall be completed no later than 18 months after promulgation of the applicable requirement. However, no such reopening is

required if the effective date of the requirement is later than the date on which the permit is due to expire, unless the original permit or any of its terms and conditions has been extended. All such re-openings shall be initiated only after a 30 day notice of intent to reopen the permit has been provided to the permittee, except that a shorter notice may be given in case of an emergency.

(b) Inaccurate Permit Provisions: If the APCD or the USEPA determines that the permit contains a material mistake or that inaccurate statements were made in establishing the emission standards or other terms or conditions of the permit, the permit shall be reopened. Such re-openings shall be made as soon as practicable.

(c) Applicable Requirement: If the APCD or the USEPA determines that the permit must be revised or revoked to assure compliance with any applicable requirement including a federally enforceable requirement, the permit shall be reopened. Such re-openings shall be made as soon as practicable.

Administrative procedures to reopen a permit shall follow the same procedures as apply to initial permit issuance. Re-openings shall affect only those parts of the permit for which cause to reopen exists.

If a permit is reopened, the expiration date does not change. Thus, if the permit is reopened, and revised, then it will be reissued with the expiration date applicable to the re-opened permit. [*Re: 40 CFR 70.7(f), 40 CFR 70.6(a)*]

A.22 **Permit Shield.** The rules and regulations listed in Table 1.1 of this permit have been specifically identified as non-applicable to the Las Flores Canyon facility. This shield shall remain in effect until expiration of this permit or re-opening and re-issuance of this permit. [*Re: 40 CFR 70.6(f), APCD Rule 1303.E.4*]

A.23 **Credible Evidence.** Nothing in this permit shall alter or affect the ability of any person to establish compliance with, or a violation of, any applicable requirement through the use of credible evidence to the extent authorized by law. Nothing in this permit shall be construed to waive any defenses otherwise available to the permittee, including but not limited to, any challenge to the Credible Evidence Rule (see 62 Fed. Reg. 8314, Feb. 24, 1997), in the context of any future proceeding. [*Re: 40 CFR 52.12(c)*]

A.24 **Risk Management Plan – Section 112r.** ExxonMobil shall comply with the requirements of 40 CFR 68 on chemical accident prevention provisions. The annual compliance certification must include a statement regarding compliance with this part, including the registration and submission of the risk management plan (RMP). [*Re: 40 CFR 68*]

A.25 **Emission Factor Revisions.** The APCD may update the emission factors for any calculation based on USEPA AP-42 or APCD P&P emission factors at the next permit modification or permit reevaluation to account for USEPA and/or APCD revisions to the underlying emission factors. Further, ExxonMobil shall modify its permit via an ATC application if compliance data shows that an emission factor used to develop the permit's potential to emit is lower than that documented in the field. The ATC permit shall, at a minimum, adjust the emission factor to that documented by the compliance data consistent with applicable rules, regulations and requirements. [*Re: ATC 5651, PTO 5651*]

9.B Generic Conditions

The generic conditions listed below apply to all emission units, regardless of their category or emission rates. These conditions are federally enforceable. These rules apply to the equipment and operations at the Las Flores Canyon facility as they currently exist. Compliance with these requirements is discussed in Section 3.4.2. In the case of a discrepancy between the wording of a condition and the applicable APCD rule, the wording of the rule shall control.

B.1 **Circumvention (Rule 301).** A person shall not build, erect, install, or use any article, machine, equipment or other contrivance, the use of which, without resulting in a reduction in the total release of air contaminants to the atmosphere, reduces or conceals an emission which would otherwise constitute a violation of Division 26 (Air Resources) of the Health and Safety Code of the State of California or of these Rules and Regulations. This Rule shall not apply to cases in which the only violation involved is of Section 41700 of the Health and Safety Code of the State of California, or of APCD Rule 303. [*Re: APCD Rule 301*]

B.2 **Visible Emissions (Rule 302).** ExxonMobil shall not discharge into the atmosphere from any single source of emission any air contaminants for a period or periods aggregating more than three minutes in any one hour which is:

(a) As dark or darker in shade as that designated as No. 1 on the Ringelmann Chart, as published by the United States Bureau of Mines, or

(b) Of such opacity as to obscure an observer's view to a degree equal to or greater than does smoke described in subsection B.2.(a) above.

(c) ExxonMobil shall determine compliance with the requirements of this Condition/Rule and Condition C.44. [*Re: APCD Rule 302*]

B.3 **Nuisance (Rule 303).** No pollutant emissions from any source at ExxonMobil shall create nuisance conditions. No operations shall endanger health, safety or comfort, nor shall they damage any property or business. [*Re: APCD Rule 303*]

B.4 **PM Concentration - South Zone (Rule 305).** ExxonMobil shall not discharge into the atmosphere, from any source, particulate matter in excess of the concentrations listed in Table 305(a) of Rule 305. [*Re: APCD Rule 305*]

B.5 **Specific Contaminants (Rule 309).** ExxonMobil shall not discharge into the atmosphere from any single source sulfur compounds, hydrogen sulfide, combustion contaminants and carbon monoxide in excess of the standards listed in Sections A, B and G of Rule 309. ExxonMobil shall not discharge into the atmosphere from any fuel burning equipment unit, sulfur compounds, nitrogen oxides or combustion contaminants in excess of the standards listed in Section E and F of Rule 309. [*Re: APCD Rule 309*]

B.6 **Sulfur Content of Fuels (Rule 311).** ExxonMobil shall not burn fuels with a sulfur content in excess of 0.5% (by weight) for liquid fuels and 239 ppmvd or 15 gr/100scf (calculated as H_2S) for gaseous fuels. Compliance with this condition shall be based on continuous monitoring of the fuel gas with H_2S and HHV analyzers, quarterly total sulfur content measurements of the fuel gas using ASTM or other APCD-approved methods and diesel fuel billing records or other data showing the certified sulfur content for each shipment. [*Re: APCD Rule 311*]

B.7 **Organic Solvents (Rule 317).** ExxonMobil shall comply with the emission standards listed in Section B of Rule 317. Compliance with this condition shall be based on ExxonMobil's compliance with Condition C.7 (*Solvent Usage*) of this permit. [*Re: APCD Rule 317*]

B.8 **Solvent Cleaning Operations (Rule 321).** ExxonMobil shall comply with the operating requirement, equipment requirements and emission control requirements for all solvent cleaners subject to this Rule. Compliance shall be based on APCD inspection of the existing cold solvent cleaner and a thorough ATC application review for future solvent cleaners (if any). [*Re: APCD Rule 321*]

B.9 **Metal Surface Coating Thinner and Reducer (Rule 322).** The use of photochemically reactive solvents as thinners or reducers in metal surface coatings is prohibited. Compliance with this condition shall be based on ExxonMobil's compliance with Condition C.7 (*Solvent Usage*) of this permit, and facility inspections. [*Re: APCD Rule 322*]

B.10 **Architectural Coatings (Rule 323).** ExxonMobil shall comply with the emission standards listed in Section D of Rule 323 as well as the Administrative requirements listed in Section F of Rule 323. Compliance with this condition shall be based on ExxonMobil's compliance with Condition C.7 (*Solvent Usage*) of this permit and facility inspections. [*Re: APCD Rule 323*]

B.11 **Disposal and Evaporation of Solvents (Rule 324).** ExxonMobil shall not dispose through atmospheric evaporation more than one and a half gallons of any photochemically reactive solvent per day. Compliance with this condition shall be based on ExxonMobil's compliance with Condition C.7 (*Solvent Usage*) of this permit, and facility inspections. [*Re: APCD Rule 324*]

B.12 **Continuous Emissions Monitoring (Rule 328).** ExxonMobil shall comply with the requirements of Section C, F, G, H and I of Rule 328. Compliance shall be based on the monitoring, recordkeeping and reporting requirements of this permit as well as on-site inspections. [*Re: APCD Rule 328*]

B.13 **Adhesives and Sealants (Rule 353).** The permittee shall not use adhesives, adhesive bonding primers, adhesive primers, sealants, sealant primers, or any other primers, unless the permittee complies with the following:

(a) Such materials used are purchased or supplied by the manufacturer or suppliers in containers of 16 fluid ounces or less; or alternately

(b) When the permittee uses such materials from containers larger than 16 fluid ounces and the materials are not exempt by Rule 353, Section B.1, the total reactive organic compound emissions from the use of such material shall not exceed 200 pounds per year unless the substances used and the operational methods comply with Sections D, E, F, G, and H of Rule 353. Compliance shall be demonstrated by recordkeeping in accordance with Section B.2 and/or Section O of Rule 353. *[Re: APCD Rule 353]*

B.14 **Large Water Heaters and Small Boilers (Rule 360).** Any boiler, water heater, steam generator, or process heater rated greater than or equal to 75,000 Btu/hr and less than or equal to 2.000 MMBtu/hr and manufactured after October 17, 2003 shall be certified per the provisions of Rule 360. An ATC/PTO permit shall be obtained prior to installation of any grouping of boilers, water heaters, steam generators, or process heaters subject to Rule 360 whose combined system design heat input rating exceeds 2.000 MMBtu/hr.

B.15 **CARB Registered Portable Equipment.** State registered portable equipment shall comply with State registration requirements. A copy of the State registration shall be readily available whenever the equipment is at the facility. [*Re: APCD Rule 202*]

B.16 **Oil and Natural Gas Production MACT.** ExxonMobil shall comply with the following MACT requirements:

(a) NGL Storage Vessels

(i) *Operational Limits (40 CFR 63.766(b)(2)):*

(1) ExxonMobil shall operate the storage tanks with no detectable emissions at all times that material is in the storage vessel. No detectable emissions is defined as emissions less than 500 ppmv (40 CFR 63.772(c)(8)).

(2) One or more safety devices that vent directly to the atmosphere may be used on the storage tanks.

(ii) *Inspection and Monitoring Requirements:*

(1) ExxonMobil shall perform inspection and monitoring per APCD Rule 331 to maintain fugitive emission components on the storage tanks at no detectable emissions. Inspection results shall be submitted with the Notification of Compliance Status Report.

(iii) *Recordkeeping Requirements (40 CFR 63.774(b)):*

(1) ExxonMobil shall retain at least five (5) years of information as required in this section. The most recent twelve (12) months of records shall be kept in a readily accessible location; the previous four (4) years may be retained offsite. Records may be maintained in hard copy or computer-readable form.

(2) ExxonMobil shall maintain records identifying ancillary equipment and compressors controlled under 40 CFR part 60, subpart HH (40 CFR 63.774(b)(9)).

(iv) *Reporting Requirements (40 CFR 63.775):*

(1) ExxonMobil shall submit the Periodic Report semiannually beginning August 17, 2003.

(2) ExxonMobil shall submit a report within one hundred eighty (180) days of a change to the process or information submitted in the Notification of Compliance Status Report per 40 CFR 63.775(f).

(b) General Recordkeeping (40 CFR 63.10(b)(2))

(i) ExxonMobil shall maintain records of the occurrence and duration of each startup, shutdown, or malfunction of operation;

(ii) Actions taken during periods of startup, shutdown, and malfunction when different from the procedures specified in ExxonMobil's startup, shutdown, and malfunction plan (SSMP);

(iii) All information necessary to demonstrate conformance with ExxonMobil's SSMP when all actions taken during periods of startup, shutdown, and malfunction are consistent with the procedures specified in such plan;

(iv) All required measurements needed to demonstrate compliance with a relevant standard, including all records with respect to applicability determination, and black oil documentation per 40 CFR 63.760;

(v) Any information demonstrating whether a source is meeting the requirements for a waiver of record-keeping or reporting requirements under this condition.

(vi) ExxonMobil shall maintain records of SSM events indicating whether or not the SSMP was followed;

(vii) ExxonMobil shall submit a semi-annual startup, shutdown, and malfunction report as specified in 40 CFR 63.10.d.5. The report shall be due by July 30th and January 30th. *[Re:* 40 CFR 63, Subpart HH*]*

B.17 **Emergency Episode Plan**. During emergency episodes, ExxonMobil shall implement the APCD approved Emergency Episode Plan for the Las Flores Canyon facility. The content of the plan shall be in accordance with the provisions of Rule 603. [*Re: APCD Rule 1303, 40 CFR 70.6*]

9.C Requirements and Equipment Specific Conditions

C.1 **Cogeneration Power Plant.** The following equipment are included in this emissions unit category:

Device Name	ExxonMobil ID	APCD DeviceNo
Cogeneration Power Plant		*102766*
Gas Turbine	CPP/ZAN-2501	6585
Heat Recovery Steam Generator	CPP/EAL-2601	7865
Turbine Bypass Stack	CPP/ZAN-2501	7864
Cogeneration Power Plant - Planned Startup/Shutdown Mode		
Combined CPP + Bypass Stacks (22 MW)	CPP/ZAN-2501/	7866

(a) Emission Limits: Except as noted below, mass emissions from the Cogeneration Power Plant ("CPP") shall not exceed the limits listed in Tables 5.3 and 5.4. The *Normal Operation Mode/Heat Recovery Steam Generator* line item in Tables 5.3 and 5.4 shall not be enforced. Compliance shall be based on sliding one-hour average values comprised of 15-minute average data points through the use of process monitors (e.g., fuel use meters) and CEMS; and the monitoring, recordkeeping and reporting conditions of this permit. For pollutants without CEMS monitors, the permitted emission factors in Table 5.2 shall be used for determining compliance with the mass emission rates. In addition, the following specific emission limits apply:

(i) *BACT* – Except during the Startup/Shutdown Mode, the emissions, after control from the CPP shall not exceed the BACT limits listed in Table 4.2 (*BACT Performance Standards*). Compliance shall be based on annual source testing for all pollutants. In addition, CEMs shall be used to determine compliance with the NO_x and CO, emission concentrations limits in Table 9.1 below (parts per million volume dry at 3 percent oxygen). Compliance shall be based on 15-minute clock average values.

(ii) The BACT concentration limits in Table 9.1 apply only during Normal Operations and the HRSG Only modes as defined in Section 4.2.2 of this permit. Further, in addition to the concentration limits, CO mass emissions shall not exceed 17.0 lb/hr.

Table 9.1 BACT Concentration Limits

Operating Mode	NO_x (as NO_2)	CO
Gas Turbine Only Operations	24.6	29.1
Gas Turbine/HRSG Tandem Operations	22.3	35.0
HRSG Only Operations	24.6	400.0

(iii) *Ammonia Slip* – Except during the Startup/Shutdown Mode, the concentration of ammonia from the CPP stack shall not exceed 20 ppmv. Compliance shall be based source tests and during inspections using absorbent tubes or bag samples.

(iv) *NSPS Subpart GG* – Per 40 CFR 60.333, ExxonMobil shall comply with the following sulfur dioxide standards:

(1) 0.015 percent by volume (at 15% O_2);

(2) Fuel gas must not have a sulfur content in excess of 0.8 percent by weight.

(b) Operational Limits: The following operational limits apply to the CPP:

(i) *Fuel Gas Sulfur Limit* – ExxonMobil shall only use pipeline quality natural gas as fuel for the CPP. The natural gas shall contain total sulfur in concentrations not to exceed 24 ppmvd. Compliance with this condition shall be based on monitoring, recordkeeping and reporting requirements of this permit.

(ii) *Operating Mode Limits* – ExxonMobil may only operate the CPP in one of the three modes (Normal Operations Mode, HRSG Mode and Startup/Shutdown Mode) as defined in Section 4.2.2 of this permit. Compliance shall be based on the monitoring, recordkeeping and reporting requirements of this permit.

(iii) *Usage Limits – Normal Operations Mode* – ExxonMobil shall comply with the following usage limits:

(1) Combined Gas Turbine and HRSG Heat Input: 605.140 MMBtu/hr; 14,523 MMBtu/day; 1,321,626 MMBtu/quarter; 5,290,134 MMBtu/year

(2) Bypass Stack Flow Rate: The exhaust flow rate from the gas turbine bypass stack shall not exceed 386 dscfm.

(3) Compliance shall be based on the monitoring, recordkeeping and reporting requirements of this permit.

(iv) *Usage Limits – HRSG Mode* – ExxonMobil shall comply with the following usage limits:

(1) Gas Turbine Heat Input: no fuel input is allowed to the gas turbine.

(2) HRSG Heat Input: 345.000 MMBtu/hr; 8,280 MMBtu/day; 753,480 MMBtu/quarter; 3,015,990 MMBtu/year.

(3) Compliance shall be based on the monitoring, recordkeeping and reporting requirements of this permit.

(v) *Usage Limits – Planned Startup/Shutdown Mode* – ExxonMobil shall comply with the following usage limits:

(1) Gas Turbine/HRSG Heat Input: 309 MMBtu/hr; 618 MMBtu/day; 1,853 MMBtu/quarter; 5,559 MMBtu/year

(2) Operating Hours: 2 hours/day; 6 hours/quarter; 18 hours/year

(3) Compliance shall be based on the monitoring, recordkeeping and reporting requirements of this permit.

(vi) *Emission Controls – Gas Turbine* - ExxonMobil shall use steam injection and selective catalytic reduction (SCR) emission controls at all times when operating the gas turbine during the Normal Operations Mode and shall achieve a minimum of 90 percent (by mass) overall reduction and a minimum of 80 percent (by mass) NO_x reduction across the SCR. Except during startups/shutdowns, the steam-to-fuel injection ratio to the gas turbine shall be maintained at a minimum ratio of 0.6 lb H_2O/1.0 lb fuel and the ammonia injection ratio to the SCR reactor shall be maintained at a minimum ratio of 1.0 lb-mole NH_3/1.0 lb-mole NO_x (inlet). The steam and ammonia injection ratios shall be based on a 15-minute clock average (or less). Compliance shall be based on the monitoring and recordkeeping requirements of this permit.

(vii) *Emission Controls – HRSG* - ExxonMobil shall use low-NO_x burners and selective catalytic reduction (SCR) emission controls at all times when operating the HRSG during the Normal Operations Mode and HRSG Only Mode and shall achieve a minimum of 80 percent (by mass) NO_x reduction across the SCR. Except during startups/shutdowns, the ammonia injection ratio to the SCR reactor shall be maintained at a minimum ratio of 1.0 lb-mole NH_3/1.0 lb-mole NO_x (inlet). The ammonia injection ratio shall be based on a 15-minute clock average (or less). Compliance shall be based on the monitoring and recordkeeping requirements of this permit.

(viii) *Emission Controls – SCR Unit* - ExxonMobil shall operate and maintain the SCR unit according to the manufacturer's instructions and operations manuals. These instructions and manuals shall be kept onsite. The flue gas entering the SCR unit shall be maintained (during Normal Operations Mode and HRSG Only Mode) between 500 ºF and 750 ºF. Compliance shall be based on the monitoring and recordkeeping requirements of this permit. ExxonMobil shall use grid power during periods when the SCR catalyst is no longer capable of achieving the NO_x BACT standards and during catalyst replacements.

(ix) *Startup/Shutdown Operations* – ExxonMobil shall minimize pollutant emissions during all CPP startup and shutdown operating periods. During gas turbine shutdown, ExxonMobil shall operate the steam injection system until the point of flame instability. During gas turbine startup, ExxonMobil shall initiate steam injection once a stable flame can be maintained and shall inject ammonia at a minimum ratio of 1.0 lb-mole NH_3/1.0 lb-mole NO_x (inlet) to the SCR once a minimum operating temperature of 500 ºF is reached (this requirement does not limit ExxonMobil from introducing ammonia at temperatures lower than 500 ºF). The ammonia injection ratio shall be based on a 15-minute clock average (or less). Compliance shall be based on the monitoring and recordkeeping requirements of this permit and APCD inspections. To eliminate projected 1-hr NO_x ambient air quality standard violation due to Startup/Shutdown Operations, ExxonMobil shall not initiate CPP startup or shutdown operations while the POPCO facility thermal oxidizer is flaring during a gas plant startup. ExxonMobil shall implement APCD-approved procedures to ensure that this restriction is met.

(x) *SCR Replacement* - With prior written notification to the APCD, ExxonMobil may replace the existing catalyst with a new unit consistent with the requirements of this permit and as long as no emission or permit exceedances occur.

(xi) *Bypass Stack* - The damper on the gas turbine bypass stack shall remain in a fully closed position except during the startup and shutdown of the turbine. During start-up, the damper on the bypass stack shall remain open only for the period from when the turbine is down to when it reaches 4 MW. In no case shall the damper on the bypass stack remain open for more than 120 minutes during any startup or shutdown period. If testing or maintenance is performed, the bypass damper may remain open if the load on the turbine does not exceed 4 MW, and the entire startup period, including testing and maintenance time, does not exceed 120 minutes. Leakage exhaust rate from the bypass stack during the Normal Operations Mode shall be assumed to be 1 percent of the exhaust flow rate from the turbine at all times. ExxonMobil shall implement an operations and maintenance program to ensure that the bypass damper is properly functioning at all times. Compliance shall be based on the monitoring, recordkeeping and reporting requirements of this permit.

(c) Monitoring: ExxonMobil shall monitor the emission and process parameters listed in Table 10.1 for the life of the project. ExxonMobil shall perform annual source testing of the CPP consistent with the requirements listed in Table 4.5 and the source testing condition of this permit. In addition, ExxonMobil shall:

(i) Monitor the time the CPP operates in the Startup/Shutdown mode.

(ii) Continuously monitor the fuel gas using H_2S and HHV analyzers.

(iii) Perform quarterly total sulfur content measurements of the fuel gas using ASTM or other APCD-approved methods. ExxonMobil shall utilize APCD-approved sampling and analysis procedures.

(d) Recordkeeping: ExxonMobil shall record the emission and process parameters listed in Table 10.1. Further, except where noted, ExxonMobil shall maintain hardcopy records of the following:

(i) For each operating mode, the daily, quarterly and annual heat input in units of million Btu for the gas turbine and HRSG. In addition, the five highest hourly heat input rates per month in units of MMBtu/hr.

(ii) *CPP Startup/Shutdown Mode* - Daily, quarterly and annual records identifying the time and duration the CPP is in the *Startup/Shutdown* Mode.

(1) Documentation (log) of actions taken by ExxonMobil to minimize emissions during each CPP startup and shutdown event shall be maintained. This documentation shall include a timeline of each event showing: when the bypass stack is opened/closed (including the duration), the turbine and HRSG heat inputs, the exhaust temperature to the SCR, when steam injection is turned on/off, when ammonia injection is turned on/off, exhaust flow rates from the bypass and main stacks, MW produced by the gas turbine generator, and the concentration and mass emissions of NO_x and CO. The log shall also indicate all times when testing and maintenance operations occur as well as the nature of the testing and maintenance.

(iii) On a continuous basis, the rate of steam injection to the gas turbine in units of pounds steam per pound fuel, the rate of ammonia injection to the SCR in units of lb-moles ammonia to lb-moles inlet NO_x, and the temperature of the flue gas entering the SCR. These records may be maintained in an electronic format.

(e) Reporting: On a semi-annual basis, a report detailing the previous six month's activities shall be provided to the APCD. The report must list all data required by the *Compliance Verification Reports* condition of this permit. [*Re: ATC 5651, PTO 5651, ATC/PTO 5651-01, ATC/PTO 10172, ATC/PTO 11459*]

C.2 **Thermal Oxidizer.** The following equipment are included in this emissions unit category:

Device Name	ExxonMobil ID	APCD DeviceNo
Thermal Oxidizer		*1088*
Purge and Pilot	OTP/EAW-1601	102738
Planned Continuous - Low Pressure	OTP/EAW-1601	102739
Planned Continuous - Acid Gas	OTP/EAW-1601	102740
Planned - Other	OTP/EAW-1601	102741
Unplanned - Other	OTP/EAW-1601	102742

(a) Emission Limits: Mass emissions from the flare relief system listed above shall not exceed the limits listed in Tables 5.3 and 5.4. Notwithstanding the above and consistent with APCD P&P 6100.004, the short-term emission limits for *Planned - Other* and *Unplanned - Other* flaring categories in Table 5.3 shall not be considered enforceable limits. Compliance with this condition shall be based on the monitoring, recordkeeping and reporting conditions in this permit.

It is assumed continuous planned flaring occurs from the Low Pressure and Acid Gas

flare headers at one-half the minimum detection limit for each meter according to manufacturer minimum velocity detection limits (0.25 fps).

(b) Operational Limits:

(i) *Flaring Volumes* - Flaring volumes from the purge and pilot, continuous LP, continuous AG, planned other, and unplanned other events shall not exceed the following volumes:

Flare Category	Hourly (10^3 scf)	Daily (10^3 scf)	Quarterly (10^6 scf)	Annual (10^6 scf)
Purge/Pilot	3.300	79.200	7.227	28.908
Continuous – LP	1.414	33.936	3.097	12.387
Continuous – AG	0.245	5.880	0.537	2.146
Planned Other			11.740	24.887
Unplanned Other			2.680	7.539

(ii) *Flare Purge/Pilot Fuel Gas Sulfur Limits* - The purge/pilot fuel gas combusted in the thermal oxidizer shall not exceed a total sulfur content of 24 ppmv. Compliance shall be based on the monitoring, recordkeeping and reporting requirements of this permit.

(iii) *Flare Planned Continuous Flaring Sulfur Limits* - The sulfur content of all gas burned as continuous flaring in the low pressure flare header shall not exceed 500 ppmv total sulfur. The sulfur content of all gas burned as continuous flaring in the acid gas flare header shall not exceed 239 ppmv total sulfur. These limits shall be enforced on an average quarterly basis (i.e., the average of all sulfur content measurements during the quarter). Compliance shall be based on the monitoring, recordkeeping and reporting requirements of this permit.

(iv) *Rule 359 Technology Based Standards* - ExxonMobil shall comply with the technology based standards of Section D.2 of Rule 359. Compliance shall be based on monitoring and recordkeeping requirements of this permit as well as APCD inspections.

(v) *Ammonia* - ExxonMobil shall only combust ammonia in the thermal oxidizer during ammonia tank loading operations and during approved breakdown conditions. The amount of ammonia sent to the thermal oxidizer is limited to that volume contained in the hose connecting the ammonia tank and the tank truck. For reporting purposes, ExxonMobil shall assume that each loading operation results in 6.1 pounds of NO_x formed during the combustion process. ExxonMobil shall not exceed 6 ammonia tank loading operations per quarter and 24 ammonia tank loading operations per year.

(vi) *Acid Gas Fuel Enrichment Usage* - ExxonMobil shall only combust acid gas fuel enrichment gas in the thermal oxidizer in volumes needed to ensure combustion of the acid gas.

(vii) *Flaring Modes* - ExxonMobil shall operate the thermal oxidizer consistent with APCD P&P 6100.004 (*Planned and Unplanned Flaring Events*). Section 4.5.2 of this permit defines each of the modes and flare categories. If ExxonMobil is unable to comply with the infrequent planned flaring limit of 4 events per year from the

same processing unit or equipment type, then an ATC permit application shall be submitted to incorporate those emissions in the short-term (hourly and daily) emissions of Table 5.3.

(viii) *Rule 359 Planned Flaring Target Volume Limit* - Pursuant to Rule 359, ExxonMobil shall not flare more than 19 million standard cubic feet per month during planned flaring events.

(ix) *Continuous Flaring* - Continuous flaring greater than the minimum detection limit of the meters for the acid gas, LP, and HP headers is prohibited.

(c) Monitoring: The equipment listed in this section are subject to all the monitoring requirements listed in APCD Rule 331.G. ExxonMobil shall monitor the emission and process parameters listed in Table 10.3 for the life of the project. In addition, the following monitoring requirements apply to the flare relief system:

(i) *Flare Event Volumes* - The volumes of gas flared during each event shall be monitored by use of APCD-approved flare header flow meters. The meters shall be calibrated and operated consistent with the APCD approved ExxonMobil CEMS Plan. An event is defined as any flow recorded by the flare header flow meters that exceeds the event flow rate thresholds listed below for 60 seconds or more. During an event, any subsequent flows recorded by the flare header flow meter within 5 minutes after the flow rate drops below the minimum detection level of the meter shall be considered as part of the event.

Flare Header	Event Flow Rate Threshold (scfh)	Meter Minimum Detection Level (scfh)
Low Pressure	4,596	2,827
High Pressure	1,590	1,590
Acid Gas	491	491

(ii) All flaring not classified as an event pursuant to the above definition shall be aggregated as a single quarterly volume and recorded in the *Planned Other* flaring category.

(iii) *Purge/Pilot Gas* - ExxonMobil shall continuously monitor the purge/pilot fuel gas using H_2S and HHV analyzers. ExxonMobil shall also perform quarterly total sulfur content measurements of the fuel gas using ASTM or other APCD-approved methods. ExxonMobil shall utilize APCD-approved sampling and analysis procedures.

(iv) *Flaring Sulfur Content* - The hydrogen sulfide content of produced gas and acid gas combusted during flaring events shall be measured on the schedule pursuant to Appendix D.13 of the APCD-approved CEMS Plan using APCD-approved ASTM methods. On an annual basis, ExxonMobil shall also measure the non-hydrogen sulfide reduced sulfur compounds and these values shall be added to the hydrogen sulfide measurements to obtain the total sulfur content. ExxonMobil shall perform additional testing of the sulfur content and hydrogen sulfide content, using approved test methods, as requested by the APCD. The definition of an event as stated in Appendix D.13 shall only be applicable for the sole purpose of determining when

ExxonMobil is required collect samples through the automatic flare gas sampling system.

On a monthly basis, ExxonMobil shall sample the low pressure and acid gas flare headers to determine the hydrogen sulfide content using sorbent tubes. To obtain the total sulfur content, ExxonMobil shall add the prior year's non-hydrogen sulfide reduced sulfur compounds analysis result to the absorbent tube readings.

(v) *Pilot Flame Detection* - ExxonMobil shall continuously monitor each pilot to ensure that a flame is present at each pilot at all times.

(d) Recordkeeping: The equipment listed in this section are subject to all the recordkeeping requirements listed in APCD Rule 331.G. ExxonMobil shall record the emission and process parameters listed in Table 10.3. In addition, the following recordkeeping conditions apply to the thermal oxidizer:

(i) *Flare Event Logs* - All flaring events shall be recorded in a log. The log shall include: date; duration of flaring events (including start and stop times); quantity of gas flared; total sulfur content; hydrogen sulfide content; high heating value; reason for each flaring event, including the processing unit or equipment type involved; the total heat input (MMBtu) per event; and, the type of event as defined by APCD P&P 6100.004 (e.g., Planned - Continuous LP, –Planned – Frequent, Planned – Infrequent, etc.). The volumes of gas combusted and resulting mass emissions of all criteria pollutants for each type of event shall also be summarized for a cumulative summary for each day, quarter and year. This log shall include any flaring events of ammonia and use of fuel for acid gas enrichment.

(ii) *Pilot/Purge Gas Volume* - The volume of pilot/purge fuel gas combusted in the thermal oxidizer shall be recorded on a weekly, quarterly and annual basis.

(iii) *Ammonia Tank Loading Operations Log* - ExxonMobil shall track and log the date of each ammonia tank loading operation.

(e) Reporting: The equipment listed in this section are subject to all the reporting requirements listed in APCD Rule 359.H. On a semi-annual basis, a report detailing the previous six month's activities shall be provided to the APCD. The report must list all data required by the *Compliance Verification Reports* condition of this permit as well as the information required by and Section H of Rule 359. [*Re: ATC 5651, PTO 5651, ATC/PTO 10172, ATC/PTO 11322*]

C.3 **Fugitive Hydrocarbon Emissions Components.** The following equipment are included in this emissions unit category:

Device Type	Device Subtype	APCD DeviceNo
Fugitive Components - Gas		
Valve	Accessible	1097
Valve	Inaccessible	1098
Valve	Unsafe	7870
Valve	Bellows / Background ppmv	6551
Valve	Category A	6474
Valve	Category B	7872
Valve	Category C	104929
Valve	Category E	104926
Valve	Category F	9710
Valve	Category H	1099
Valve	Category H (Inaccessible)	1100
Valve	Category I	6475
Connection	Accessible/Inaccessible	1101
Connection	Unsafe	6568
Connection	Category B	7874
Connection	Category C	104928
Connection	Category E	104925
Connection	Category F	9709
Compressor Seal	To VRS	6555
	Exempt	6557

Device Type	Device Subtype	APCD DeviceNo
Fugitive Components - Oil		
Valve	Accessible	1092
Valve	Inaccessible	1093
Valve	Bellows / Background ppmv	6558
Valve	Category B	7877
Valve	Category H	1094
Valve	Category H (Inaccessible)	5967
Connection	Accessible/Inaccessible	1095
Connection	Unsafe	7880
Connection	Category B	1096
Connection	Category F	9711
Pump Seal	Single	7879
Pump Seal	Dual/Tandem	6561
	Exempt	6563

(a) Emission Limits: Mass emissions from the gas service (sub-total) and oil service (sub-total) components listed above shall not exceed the limits listed in Tables 5.3 and 5.4. Compliance with this condition shall be based on actual component-leakpath counts as documented through the monitoring, recordkeeping and reporting conditions in this permit.

(b) Operational Limits: Operation of the equipment listed in this section shall conform to the requirements listed in APCD Rule 331.D and E. Compliance with these limits shall be assessed through compliance with the monitoring, recordkeeping and reporting conditions in this permit. In addition ExxonMobil shall meet the following requirements:

(i) *VRS Use* - The vapor recovery and gas collection (VR & GC) systems at LFC shall be in operation when equipment connected to these systems are in use. These systems include piping, valves, and flanges associated with the VR & GC systems. The VR & GC systems shall be maintained and operated to minimize the release of emissions from all systems, including pressure relief valves and gauge hatches.

(ii) *I&M Program* - The APCD-approved I&M Plan for ExxonMobil LFC (*Fugitive Emissions Inspection and Maintenance Program for Las Flores Canyon Process Facilities*) shall be implemented for the life of the project. The Plan, and any subsequent APCD approved revisions, is incorporated by reference as an enforceable part of this permit.

(iii) *Leakpath Count* - The total component-leakpath count listed in ExxonMobil's most recent I&M component-leakpath inventory shall not exceed the total component-leakpath count listed in Table 5.1 by more than five percent. This five percent range is to allow for minor differences due to component counting methods and does not constitute allowable emissions growth due to the addition of new equipment.

(iv) *Venting* - All routine venting of hydrocarbons shall be routed to either the gas plant, flare header, or other APCD-approved control device.

(v) *NSPS KKK* - For all permitted and future component-leakpaths in hydrocarbon service, ExxonMobil shall comply with the emission standard requirements of 40 CFR 60.632, as applicable.

(vi) **Category A Requirements.** Component-leakpaths monitored monthly at less than 1,000 ppmv shall achieve a mass emission control efficiency of 84 percent. Category A component-leakpaths also include components subject to enhanced fugitive inspection and maintenance programs for which screening values are also maintained at or below 1,000 ppmv as methane, monitored per EPA Reference Method 21. For Category A components, screening values above 1,000 ppmv shall trigger the Rule 331 repair process per the minor leak schedule.

(vii) **Category B Requirements.** Component-leakpaths monitored quarterly at less than 500 ppmv shall achieve a mass emission control efficiency of 85 percent. Category B component-leakpaths are defined as component-leakpaths associated with closed vent systems (e.g., vapor recovery systems, and Subpart Kb and Subpart HH vessels) for which screening values are maintained at or below 500 ppmv as methane, monitored per EPA Reference Method 21. Category B component-leakpaths also include components subject to enhanced fugitive inspection and maintenance programs for which screening values are also maintained at or below 500 ppmv as methane, monitored per EPA Reference Method 21. For Category B components, screening values above 500 ppmv shall trigger the Rule 331 repair process per the minor leak schedule.

(viii) **Category C Requirements** - Component-leakpaths monitored quarterly at less than 100 ppmv shall achieve a mass emission control efficiency of 87 percent. Category C component-leakpaths are defined as component-leakpaths subject to enhanced fugitive inspection and maintenance programs for which screening values are maintained at or below 100 ppmv as methane, monitored per EPA Reference Method 21. For Category C components, screening values above 100 ppmv shall trigger the Rule 331 repair process per the minor leak schedule.

(ix) **Category E Requirements.** Component-leakpaths monitored monthly at less than 100 ppmv shall achieve a mass emission control efficiency of 88 percent. Category E component-leakpaths are defined as component-leakpaths subject to enhanced fugitive inspection and maintenance programs for which screening values are also

maintained at or below 100 ppmv as methane, monitored per EPA Reference Method 21. For Category E components, screening values above 100 ppmv shall trigger the Rule 331 repair process per the minor leak schedule.

(x) **Category H Requirements.** Low emitting design component-leakpaths monitored quarterly at less than 1,000 ppmv shall achieve a mass emission control efficiency of 90 percent. Category H component-leakpaths are subject to Rule 331 for which screening values are maintained at or below 1,000 ppmv as methane, monitored per EPA Reference Method 21. For Category H components, screening values above 1,000 ppmv shall trigger the Rule 331 repair process per the minor leak schedule.

(xi) **Category I Requirements.** Low emitting design component -leakpaths monitored monthly at less than 1,000 ppmv shall achieve a mass emission control efficiency of 92 percent. Category I component-leakpaths are subject to Rule 331 and an enhanced fugitive inspection and maintenance program for which screening values are maintained at or below 1,000 ppmv as methane, monitored per EPA Reference Method 21. For Category I components, screening values above 1,000 ppmv shall trigger the Rule 331 repair process per the minor leak schedule.

(xii) *BACT* - ExxonMobil shall apply BACT, as defined in Tables 4.3 of this permit and 4.4 of the Part 70/APCD PTO 5651, to all component- leakpaths in hydrocarbon service for the life of the project. This requirement applies to components subject to the *de minimis* exemption of Rule 202 as well as projects that do not trigger the BACT threshold of Rule 802 and equivalent routine replacements.

(c) Monitoring: The equipment listed in this section are subject to all the monitoring requirements listed in APCD Rule 331.F and NSPS Subpart KKK (as applicable). The test methods in Rule 331.H and NSPS Subpart KKK shall be used, when applicable. In addition, ExxonMobil shall:

(i) *ERC Certificate No. 0004-0103* - Perform monthly monitoring on 217 standard (i.e., non-bellows seal and non-low emissions) valves and a minimum of 170 low-emissions packing valves in order to generate the 0.18 tpq of ROC ERCs for ERC Certificate No. 0004-0103. These valves are listed in a separate table in ExxonMobil's I&M Plan. ExxonMobil shall replace any valve on the list with a replacement if the valve is no longer in hydrocarbon service. The APCD shall be notified, in writing, of all such replacements within ninety (90) days after the replacement. The notification shall include complete equipment description information equivalent to the table in ExxonMobil's APCD approved I&M Plan and the reason for the replacement. Subsequent I&M records and reports shall include the replacement valve(s).

(ii) *ERCs for Platforms Harmony and Heritage Compressor Projects* - ExxonMobil shall perform monthly monitoring on a minimum of 400 standard (i.e., non-bellows seal and non-low emissions) valves and a minimum of 265 low-emissions packing valves in order to generate 0.39 tpq of ROC ERCs required for projects permitted by PTO 9634 and PTO 9640. These valves are listed in a separate table in ExxonMobil's I&M Plan. ExxonMobil shall replace any valve on the list with a replacement if the valve is no longer in hydrocarbon service. The APCD shall be notified, in writing, of all such replacements within ninety (90) days after the replacement. The notification shall include complete equipment description information equivalent to the table in

ExxonMobil's APCD approved I&M Plan and the reason for the replacement. Subsequent I&M records and reports shall include the replacement valve(s).

(iii) *ERCs for Platform Heritage Low/Intermediate Pressure and High Pressure Projects* - ExxonMobil shall perform monthly monitoring on a minimum of 82 standard (i.e., non-bellows seal and non-low emissions) valves and a minimum of 264 standard flanges/connections at 100 ppmv leak detection threshold. ExxonMobil shall perform quarterly monitoring on a minimum of 77 standard (i.e., non-bellows seal and non-low emissions) valves and a minimum of 185 standard flanges/connections at 100 ppmv leak detection threshold. These monitoring requirements must be fulfilled in order to generate 0.1977 tpq of ROC ERCs of the total required for projects permitted by ATC 11132 Mod-01. These components will be listed in a separate table in ExxonMobil's I&M Plan. ExxonMobil shall replace any component on the list with a replacement if the component is no longer in hydrocarbon service. The APCD shall be notified, in writing, of all such replacements within ninety (90) days after the replacement. The notification shall include complete equipment description information equivalent to the table in ExxonMobil's APCD approved I&M Plan and the reason for the replacement. Subsequent I&M records and reports shall include the replacement component(s).

(d) Recordkeeping: The equipment listed in this section are subject to all the recordkeeping requirements listed in APCD Rule 331.G and NSPS Subpart KKK, as applicable. In addition, ExxonMobil shall:

(i) *I&M Log* - ExxonMobil shall record in a log the following: a record of leaking components found (including name, location, type of component, date of leak detection, the ppmv or drop-per-minute reading, date of repair attempts, method of detection, date of re-inspection and ppmv or drop-per-minute reading following repair); a record of the total components inspected and the total number and percentage found leaking by component type; a record of leaks from critical components; a record of leaks from components that incur five repair actions within a continuous 12-month period; and, a record of component repair actions including dates of component re-inspections. For the purpose of this paragraph, a leaking component is any component which exceeds the applicable limit:

(1) greater than 1,000 ppmv for minor leaks under Rule 331 (includes Accessible/Inaccessible components, Category A, Category H, and Category I components);
(2) greater than 100 ppmv for components subject to current BACT (includes Bellows, Category F and Category G)
(3) greater than 100 ppmv for components subject to enhanced fugitive inspection and maintenance programs (Category C and Category E)
(4) greater than 500 ppmv for components subject to enhanced fugitive inspection and maintenance programs (Category B and Category D)

(ii) For components installed as BACT, as approved by the APCD, maintain as a separate and identifiable part of the I&M Log records which include: tag number, component type, plant/P&ID, leak ppm, leak detect date, BACT installation date, reinspect date, Exxon request date, APCD approval date, BACT 45-day due date, BACT Type/Review Status, and APCD inspection date.

(iii) For valves and flanges/connections monitored monthly per DOI 002, and ATC 9651-01, maintain as a separate and identifiable part of the I&M Log records that the Category I valves were monitored monthly at 1,000 ppmv detection limit.

(iv) For valves and flanges/connections monitored monthly per DOI 0034 maintain as a separate and identifiable part of the I&M Log records that the Category E valves and flanges/connections were monitored monthly at 100 ppmv detection limit.

(v) For valves and flanges/connections monitored monthly or quarterly per DOI 0040 maintain as a separate and identifiable part of the I&M Log records that the Category E and Category C valves and flanges/connections were monitored at the appropriate frequency (monthly or quarterly) at 100 ppmv detection limit.

(e) Reporting: The equipment listed in this section are subject to all the reporting requirements listed in APCD Rule 331.G and NSPS KKK, as applicable. ExxonMobil shall provide an updated fugitive hydrocarbon component inventory due to changes in the component list within one calendar quarter of any change, per Rule 331.I. On a semi-annual basis, a report detailing the previous six month's activities shall be provided to the APCD. The report must list all data required by the *Compliance Verification Reports* condition of this permit. [*Re: ATC 5651, PTO 5651, ATC/PTO 11170, ATC/PTO 11410*]

C.4 **Crew and Supply Boats.** The following equipment are included in this emissions category:

Device Type	APCD DeviceNo
Crew Boat - Harmony/Heritage	
Main Engine - DPV	6515
Main Engine - Spot Charter	6564
Auxilliary Engine - DPV	6516
M/V Broadbill	
Main Engine - DPV	107946
Auxilliary Engine - DPV	107947

Device Type	APCD DeviceNo
Supply Boat - Harmony/Heritage	
Main Engine - DPV	6513
Main Engine - Spot Charter	7883
Generator Engine - DPV	6514
Bow Thruster - DPV	7884
Winch - DPV	103247

(a) Emission Limits: Mass emissions from the crew and supply boats listed above shall not exceed the limits listed in Tables 5.3 and 5.4. Compliance with the quarterly and annual mass emission limits for the main engines on the Dedicated Project Vessel ("DPV") and spot charter crew and supply boat engines shall be based on the subtotal emission limits in Table 5.4. Compliance with the quarterly and annual mass emission limits for the auxiliary engines on the DPV (including the Broadbill) crew boats shall be based on the subtotal emission limits in Table 5.4. Compliance with this condition shall be based on the monitoring, recordkeeping and reporting conditions in this permit. In addition:

(i) *NO_x Emissions* - Except as provided below, controlled emissions of NO_x from each diesel fired main engine in each DPV crew and supply boat shall not exceed 337 lb /1000 gallons (8.4 g/bhp-hr). Spot charter crew and supply boats shall not be required to comply with this controlled NO_x emission rate. Compliance shall be

based on annual source testing consistent with the requirements listed in the Permits to Operate for ExxonMobil's Platforms Hondo, Harmony and Heritage. Controlled emissions of NO_x from the Tier II diesel fired main propulsion engines on the *M/V Broadbill* crew boat, shall not exceed 218.98 lb/kgal (5.46 g/bhp-hr). Controlled emissions of NO_x from the Tier II diesel fired auxiliary engines on the *M/V Broadbill* crew boats, shall not exceed 217.87 lb/kgal (5.44 g/bhp-hr). Compliance shall be based on annual source testing consistent with the requirements listed in this permit and DOI 0042 Mod - 01 (*PTO 9100, PTO 9101, PTO 9102*).

(b) Operational Limits: Operation of the equipment listed in this section shall not exceed the limits listed below. Compliance with these limits shall be assessed through compliance with the monitoring, recordkeeping and reporting conditions in this permit. The fuel use limits in items (i) – (iv) below apply to the crew and supply boats while operating within 3-miles of the California coast. For compliance with the limits in (i) – (iv) below, all the fuel use within 3-miles of the California coast shall be assigned according the APCD-approved *Boat Monitoring and Reporting Plan.*

(i) *Crew Boat Main Engine Limits* - The combined DPV and spot charter crew boat main engines for Platforms Harmony and Heritage combined shall not use more than: 14,615 gallons per quarter; 58,458 gallons per year of diesel fuel.

(1) The combined DPV and spot charter crew boat main engines for Platforms Harmony and Heritage shall each not use more than 180 gallons per hour; 1,083 gallons per day.

(ii) *Crew Boat Auxiliary Engine Limits* - The crew boat auxiliary engines for Platforms Harmony and Heritage combined shall not use more than: 7.2 gallons per hour; 43.2 gallons per day; 2,501 gallons per quarter; 10,006 gallons per year of diesel fuel.

(iii) *M/V Broadbill Crew Boat Operational Requirements* – ExxonMobil shall use the *M/V Broadbill* for at least forty percent (40%) of all crew boat trips to the platforms each year. Compliance with this condition will be determined each calendar year based on total fuel usage from the *M/V Broadbill* and fuel usage from all DPV crew boats supporting the Exxon – SYU platforms.

(iv) *Supply Boat Main Engine Limit* - The combined DPV and spot charter supply boat main engines for Platforms Harmony and Heritage combined shall not use more than: 6,607 gallons per quarter; 6,607 gallons per year of diesel fuel:

(1) The combined DPV and spot charter supply boat main engines for Platforms Harmony and Heritage shall each not use more than 143 gallons per hour; 143 gallons per day.

(v) *Supply Boat Auxiliary Engine Limits* - The combined uncontrolled generator, bow thruster, and winch supply boat engines for Platforms Harmony and Heritage shall not use more than: 61 gallons per hour; 364 gallons per day; 2,020 gallons per quarter; 2,020 gallons per year of diesel fuel.

(vi) *Spot-Charter Limits* - The number of allowable annual spot charter crew boat trips shall not exceed ten percent of the actual annual number of trips made by the DPV crew boats. The number of allowable annual spot charter supply boat trips shall not

exceed ten percent of the actual annual number of trips made by DPV supply boats. Compliance shall be based on a comparison of the main engine fuel use for DPV and spot charter boats (i.e., the total main engine spot charter supply boat fuel use must be less than 10 percent of the total main engine DPV supply boat fuel use and the total main engine spot charter crew boat fuel use must be less than 10 percent of the total main engine DPV crew boat fuel use) on an annual basis.

(vii) Crew, supply and spot charter boats shall be for the activities specified in section 2.1.6 of Part 70 PTO 5651/APCD PTO 5651. Any boats for or in support of activities not specified in Section 2.1.6 will be considered as new projects, and the boat emissions associated with such projects will be considered in the project potential to emit. Supply boats shall not use the Ellwood pier for transfer of personnel in place of crew boats.

(viii) *Liquid Fuel Sulfur Limit* - Diesel fuel used by all IC engines shall have a sulfur content no greater than 0.0015 weight percent as determined by fuel purchase records.

(ix) *New/Replacement Boats* – With the exception of the *M/V Broadbill* crew boat, ExxonMobil may utilize any new/replacement project (DPV) boat without the need for a permit revision if that boat meets the following conditions:

(1) The main engines are of the same or less bhp rating; and

(2) The combined pounds per day potential to emit (PTE) of all generator and bow thruster engines is the same or less than the sum of the pounds per day PTE for these engines as determined from the corresponding Table 5.3 emission line items of this permit; and

(3) The NO_x, ROC, CO, PM and PM_{10} emission factors are the same or less for the main and auxiliary engines. For the main engines, NO_x emissions must meet the 337 lb/1000 gallons emission standard.

The above criteria also apply to spot charter boats, except for the NO_x emission standard noted in (3) above. Any proposed new/replacement crew, supply or spot charter boat that does not meet the above requirements (1) - (3) shall first obtain a permit revision prior to operating the boat. The APCD may require manufacturer guarantees and emission source tests to verify this NO_x emission standard.

(x) ExxonMobil shall revise the Boat Monitoring and Reporting Plan, obtain APCD approval of such revisions and implement the revised Plan prior to bringing any new/replacement boat into service, except for the use of spot charters. If a new spot charter is brought into service then ExxonMobil shall revise and resubmit the boat plan within thirty (30) calendar days after it is first brought into service. If the fuel metering and emissions computation procedures for a new spot charter are identical to a boat that is already addressed in the approved boat plan, a letter addendum stating this will suffice for the revision/re-submittal of the boat plan.

(xi) Prior to bringing the boat into service for the first time, ExxonMobil shall submit the information listed below to the APCD for any new/replacement crew and supply boat that meets the requirements set forth in (1) - (3) above, and for new spot charters that

have not been previously used on the *ExxonMobil – SYU Project*. For spot charters, this information shall be submitted within thirty (30) calendar days after the boat is first brought into service. ExxonMobil shall notify the APCD Project Manager (via fax or e-mail) within three (3) calendar days after a new spot charter is first brought into operation. Any boat put into service that does not meet the requirements above, as determined by the APCD at any time, shall immediately cease operations and all prior use of that boat shall be considered a violation of this permit.

(1) Boat description, including the type, size, name, engine descriptions and emission control equipment.

(2) Engine manufacturers' data on the emission levels for the various engines and applicable engine specification curves.

(3) A quantitative analysis using the operating and emission factor assumptions given in Tables 5.1 and 5.2 of this permit that demonstrates criteria (vii.3) above is met.

(4) Estimated fuel usage within state territorial waters on a daily basis.

(5) Any other information the APCD deems necessary to ensure the new boat will operate consistent with the analyses that form the basis for this permit.

(xii) *Validity of ERCs* - The ERCs generated by DOI 0042 Mod - 01 are valid only for the *M/V Broadbill* crew boat and the associated newly installed Tier II main propulsion and auxiliary engines. Any alteration to the engines installed in the *M/V Broadbill* or alteration to the actual crew boat operated by ExxonMobil shall require a modification to the DOI and to the underlying ATC to re-analyze the validity of the ERCs. If the APCD determines that the ERCs are no longer valid, then ExxonMobil shall provide substitute ERCs and apply for necessary permit modifications.

(c) Monitoring: ExxonMobil shall fully implement the APCD approved *Boat Monitoring and Reporting Plan* for the life of the project, and shall obtain APCD approval for any proposed updates or modifications to the Plan. This Plan documents the recordkeeping and reporting procedures for boat activity, fuel usage, and emissions.

(i) ExxonMobil may use alternative methods (including location methods) for documenting and reporting boat activity, fuel usage and emissions, provided these methods are approved by the APCD as being equivalent in accuracy and reliability to those of the APCD's *Data Reporting Protocol for Crew and Supply Boat Activity Monitoring* document (dated June 21, 1991).

(ii) Spot charter boats shall, at a minimum, track total fuel usage on a per day basis using APCD-approved procedures. These data shall be submitted in an APCD-approved format to the APCD.

(d) Recordkeeping: The following records shall be maintained in legible logs and shall be made available to the APCD upon request:

(i) *Maintenance Logs* - For all main and auxiliary engines on DPV crew and DPV supply boats, maintenance log summaries that include details on injector type and

timing, setting adjustments, major engine overhauls, and routine engine maintenance. These log summaries shall be made available to the APCD upon request. For each main and auxiliary engine with timing retard, an APCD Form –10 (*IC Engine Timing Certification Form*) must be completed each time the engine is serviced.

(ii) *Crew Boat Fuel Usage* - Daily, monthly, quarterly and annual fuel use for crew boat main engines and auxiliary engines while operating in state territorial waters, itemized by DPV and spot charter boats. In addition, the fuel use must be summarized for all crew boats by main and auxiliary engines.

(iii) *Supply Boat Fuel Usage* - Daily, monthly, quarterly and annual fuel use for supply boat main engines and auxiliary engines while operating in state territorial waters, itemized by DPV and spot charter boats. In addition, the fuel use must be summarized for all supply boats by main and auxiliary engines, controlled and uncontrolled engines.

(e) Reporting: On a semi-annual basis, a report detailing the previous six month's activities shall be provided to the APCD. The report must list all crew, supply and spot charter boat data required by the *Compliance Verification Reports* condition of this permit.

(i) If, at any time, the APCD determines that logs or reports indicate fuel use greater than the limits of Condition 9.C.5(b) of this permit, ExxonMobil shall restrict its vessel activities to ensure that emissions do not exceed total quarterly emissions allowed in the permit, or shall submit an application for and obtain a permit providing additional offsets. Such offsets shall be in place no later than the start of the next quarter. [*Re: ATC 5651, PTO 5651, ATC/PTO 10172, ATC/PTO 11230*]

C.5 **Pigging Equipment/Compressor Vents.** The following equipment are included in this emissions category:

Device Name	ExxonMobil ID	APCD DeviceNo
Pigging Equipment/Compressor Vents		
Oil Emulsion Pig Receiver	KAQ-3710	6565
SOV Distance Piece Vent	CZZ-1301	7881
VRU Distance Piece Vent	CZZ-1302	7882

(a) Emission Limits: Mass emissions from the oil pig receiver and compressor vents listed above shall not exceed the limits listed in Tables 5.3 and 5.4. Compliance with this condition shall be based on the monitoring, recordkeeping and reporting conditions in this permit.

(b) Operational Limits: Operation of the equipment listed in this section shall conform to the requirements listed in APCD Rule 325.E. Compliance with these limits shall be assessed through compliance with the monitoring, recordkeeping and reporting conditions in this permit. In addition ExxonMobil shall meet the following requirement:

(i) *Pigging Events* - The number of oil pig operations (events) shall not exceed the maximum operating schedule listed in Table 5.1.

(ii) *Pig Pressure* - Prior to opening the oil pig receiver, the pressure in the pig receiver shall not exceed 1 psig. Compliance shall be based on a test gauge installed to monitor the internal pressure of the receiver. Test gauge readings shall be recorded prior to each opening of the receiver.

(iii) *Pig Openings* - Access openings to the pig receiver shall be kept closed at all times, except when a pipeline pig is being placed into or removed from the receiver. Prior to opening the pig receiver, ExxonMobil shall purge the vessel with sweet fuel gas.

(iv) *VRS Use* - The vapor recovery system connected to the compressor seal/distance piece system shall be in operation when the SOV and VR compressors are in use. The VRS system includes piping, valves, and flanges associated with each VRS system. The VRS system shall be maintained and operated to minimize the release of emissions from all systems, including pressure relief valves.

(v) *Carbon Canister Control Requirements* - The carbon canister units connected to the compressor seal/distance piece system shall be in operation when the SOV and VR compressors are in use. Each carbon canister shall be maintained and operated to minimize the release of emissions of organic compounds and sulfur compounds. Each carbon canister shall achieve a minimum 75 percent (by mass) control efficiency for reactive organic compounds.

(c) Monitoring: ExxonMobil shall monitor the pressure inside the pig receiver with an APCD-approved pressure gauge, or alternative APCD-approved method. For the carbon canister control units on each distance piece compressor vent, monitor on a monthly basis the ROC control efficiency across each canister (inlet/outlet) according to APCD-approved methods. ExxonMobil shall implement the APCD approved *Carbon Canister Monitoring and Maintenance Plan* for the life of the project.

(d) Recordkeeping: ExxonMobil shall record in a log the date of each pigging operation and the pressure inside the receiver prior to each opening. For each carbon canister, ExxonMobil shall record in a log the results of every efficiency verification check (including all test results and lab analyses).

(e) Reporting: On a semi-annual basis, a report detailing the previous six month's activities shall be provided to the APCD. The report must list all data required by the *Compliance Verification Reports* condition of this permit. [*Re: ATC 5651, PTO 5651*]

C.6 **Tanks/Sumps/Separators.** The following equipment are included in this emissions category:

Device Name	ExxonMobil ID	KVB Service	APCD DeviceNo
Group A Units			
Oil Storage Tank A	ABJ-3401A		6566
Oil Storage Tank B	ABJ-3401B		6567
Rerun Tank A	ABJ-1401A		6570
Rerun Tank B	ABJ-1401B		6571

Device Name	ExxonMobil ID	KVB Service	APCD DeviceNo
Group B Units			
TT: Area Drain Oil/Water Separator	ABH-3402	3° heavy oil	6572
OTP Equilization Tank	ABJ-1424	3° heavy oil	6573
OTP Oily Sludge Thickener	ABJ-1423	3° heavy oil	6574
OTP Backwash Sump	ABH-1442	3° heavy oil	6575
OTP Backwash Collection Tank		3° heavy oil	7885
OTP Open Drain Sump	ABH-1413	3° heavy oil	6576
OTP Area Drain Oil/Water Separator	ABH-1415	3° heavy oil	6577
SGTP Area Drain Oil/Water Separator	ABH-4406	3° heavy oil	6578
SGTP Open Drain Sump	ABH-4407	3° heavy oil	6579
Group C Units			
TT Area Drain Sump	ABH-3403	3° heavy oil	6580
OTP Area Drain Sump	ABH-1414	3° heavy oil	6581
SGTP Area Drain Sump	ABH-4405	3° heavy oil	6582
Group D Units			
Demulisfier Tank	ABH-1402		6583
Group E Units			
Chemical Storage Tote Tanks			7886

(a) Emission Limits: Except as noted below, mass emissions from the equipment listed above shall not exceed the limits listed in Tables 5.3 and 5.4. For Group A tanks only, the hourly mass emission rate limits shall not be enforced. Mass emissions of hydrogen sulfide from the Equalization Tank shall not exceed: 0.10 lb/hr, 2.4 lb/day, 0.11 tpq, 0.44 tpy. Compliance with this condition shall be based on the monitoring, recordkeeping and reporting conditions in this permit.

(b) Operational Limits: All process operations from the Group A and Group B equipment listed in this section shall meet the requirements of APCD Rule 325, Sections D, E, F and G. All process operations from the Group D equipment listed in this section shall

meet the requirements of APCD Rule 326, Sections D, I, J and K. All process operations from the Group A equipment shall comply with the requirements of NSPS Subpart Kb. All process operations from Groups A, B, C and D shall comply with the BACT requirements listed in Tables 4.1 and 4.2. Compliance with these limits shall be assessed through compliance with the monitoring, recordkeeping and reporting conditions in this permit. In addition, ExxonMobil shall:

(i) *VRS Use* - The vapor recovery systems shall be in operation when the equipment connected to the VRS system at the facility are in use. The VRS system includes piping, valves, and flanges associated with each VRS system. Each VRS system shall be maintained and operated to minimize the release of emissions from all systems, including pressure relief valves and gauge hatches.

(ii) *Vapor Recovery System Efficiency* - The vapor recovery systems serving the OTP, TT and SGTP shall maintain a minimum efficiency of 95 percent (mass basis) for the short term (hourly and daily) and 99.8 percent (mass basis) for long term (quarterly and annual). Compliance shall be based on the monitoring, recordkeeping and reporting requirements of this permit as well as operating consistent with the requirements of the NSPS Subpart Kb required *Operating Plan*. Further, non-compliance with any of the daily, quarterly or annual mass emission limits in Tables 5.3 and 5.4 for any of the Group A tanks shall be assumed as non-compliance with this requirement for all vapor recovery systems.

(iii) *NSPS Subpart Kb Operating Plan* - Consistent with NSPS Subpart Kb requirements, ExxonMobil shall operate the vapor recovery systems serving the Group A units in accordance with the APCD-approved *Operating Plan* (and all subsequent APCD-approved updates thereof). A copy of the *Operating Plan* shall be maintained onsite for the life of the SYU project. The *Operating Plan* and its operating parameters are incorporated as an enforceable part of this permit.

(iv) *Carbon Canister Control Requirements* - The carbon canister units shall be in operation when the equipment connected to them at the facility are in use. Each carbon canister shall be maintained and operated to minimize the release of emissions of organic compounds and sulfur compounds. Each carbon canister shall achieve a minimum 75 percent (by mass) control efficiency for reactive organic compounds and sulfur compounds <u>unless the exhaust is routed through a single manifold</u>. If the exhaust from each carbon canister is routed together through a single manifold, then the combined control efficiency of the two carbon canisters shall be at least 75 percent (by mass). During monitoring and source testing, compliance with the 75 percent control efficiency requirement is demonstrated if the outlet ROC concentration is maintained at or below 200 ppmv (as methane) using a calibrated organic vapor analyzer (OVA) or other EPA Method 21 approved analyzer. The analyzer will be calibrated per Method 21.

(v) *Venturi Scrubber Control Requirements* - The venturi scrubber and scrubber circulation pump shall be in operation at all times the Equalization Tank is in use. The scrubber shall be maintained and operated to minimize the release of emissions of sulfur compounds. The scrubber shall achieve a minimum 99.9 percent (by mass) control efficiency for hydrogen sulfide. Compliance with the scrubber control efficiency may include use of the carbon control system. The hydrogen sulfide concentration in the exhaust to the atmosphere shall not exceed 13 ppmv. The

99.9 percent control efficiency requirement shall not apply during annual source testing if the inlet hydrogen sulfide concentration to the venturi scrubber is less than 3,181 ppmv. In these cases, the venturi scrubber shall meet an emission standard of 3.2 ppmv.

(vi) *Service Type Restrictions* - The KVB service type, as defined pursuant to APCD P&P 6100.060, for each Group B and Group C unit shall be restricted to the service type listed above or a service of a lesser emitting type (e.g., a secondary heavy oil sump may be used as a tertiary heavy oil sump).

(vii) *Throughput and Vapor Pressure Limits* - The following tank throughput and vapor pressure limits shall not be exceeded:

Tank Name	Daily (bbl/day)	Quarterly (bbl/qtr)	Annual (bbl/yr)	TVP (psia)
Oil Storage Tank A/B	140,000	11,406,250	45,625,000	11.0
Rerun Tank A/B	140,000	456,250	1,825,000	
Demulsifier Tank	55	218	869	0.81

(viii) The oil storage tank TVP data is an average of all TVP readings for the tank in any given calendar quarter. Compliance with these limits shall be assessed through compliance with the monitoring, recordkeeping and reporting conditions in this permit.

(ix) *Group E Tanks BACT* - All permitted chemical storage tote tanks containing ROC compounds where the fluid vapor pressure is greater than 0.5 psia must be kept closed at all times and must be equipped with a functional PSV valve.

(x) *Demulsifier Tank(s)* - ExxonMobil may elect use two 500 gallon demulsifier tanks in lieu of the 300 barrel demulsifier tank. At no time shall both the 300 bbl tank and the 500 gallon tanks operate concurrently or store fluids containing ROCs concurrently. The throughput limits listed in this permit apply to the total demulsifier use at the facility. The vapor pressure limit applies regardless of the tank used. The 500 gallon demulsifier tanks shall be equipped with carbon controls at all times. The 300 bbl demulsifier tank shall be equipped with carbon controls at all times when storing fluids containing ROCs. Notwithstanding the above, ExxonMobil may elect to take the 300 bbl demulsifier tank out of service. To qualify as being taken out of service, the tank must be inerted and blinded off. Prior to placing the tank back in service, ExxonMobil shall submit a written notice to the APCD stating the effective date of startup and verifying that carbon controls will be in place as well as verifying that the 500 gallon tanks will not be operated concurrently.

(c) Monitoring: The equipment listed in this section are subject to all the monitoring requirements of APCD Rule 325.H (for Group A and B units), NSPS Subpart Kb (for Group A units) and Table 10.3 for the life of the project. The test methods outlined in APCD Rule 325.G, NSPS Subpart Kb and APCD Rule 326.K shall be used, as applicable. In addition, ExxonMobil shall:

(i) For Group A units, monitor: the position of each PSV through the use of a proximity switch; the date, time and duration of each PRV opening; the vapor headspace

properties during each release (pressure relief set-point, molecular weight, weight percent of ROC in the vapor).

(ii) For the vapor recovery systems, monitor the parameters identified in the APCD-approved NSPS Kb *Operating Plan*.

(iii) Except as provided below, for each carbon canister control unit, monitor on a monthly basis the ROC emission concentration (as methane) at the outlet of each unit using a calibrated organic vapor analyzer (OVA) or other Method 21 approved analyzer. For the carbon canister control units on the Equalization tank, monitor on a weekly basis the ROC emission concentration (as methane) at the outlet of each unit using a calibrated organic vapor analyzer (OVA) or other Method 21 approved analyzer. ExxonMobil shall follow the requirements of the APCD approved *Carbon Canister Monitoring and Maintenance Plan*. ExxonMobil shall implement the approved Plan for the life of the project.

(iv) For the venturi scrubber, on a weekly basis monitor the concentration of the caustic solution in the scrubber. If the concentration of the caustic solution in the scrubber is less than 8%, monitor the outlet concentration of hydrogen sulfide from the scrubber. On an annual basis, ExxonMobil shall source test the venturi scrubber to determine the control efficiency. Source testing shall be performed in accordance with the *Source Testing* condition of this permit.

(v) For each Group B and C unit, monitor (visually and by other means, such as engineering analysis) the source of fluid streams entering the unit to assess any change in service type (as defined by APCD P&P 6100.060).

(vi) On a daily, quarterly and annual basis, monitor the throughput for each of the Group A units using APCD-approved meters. For Group D units, monitor the throughput on a daily, quarterly and annual basis using an APCD-approved level gauge or other APCD-approved alternative method.

(vii) For the Group A Oil Storage tanks, no less than three (3) days per week measure the Reid vapor pressure and storage temperature of the liquid according to APCD-approved methods. For the Group A Rerun tanks, no less than 24 hours after a PSV event measure the Reid vapor pressure and storage temperature of the liquid according to APCD-approved methods. In addition, for the Group A Rerun tanks, measure the Reid vapor pressure and storage temperature of the liquid according to APCD-approved methods at least once per year. For the Group D units, measure the Reid vapor pressure and storage temperature according to APCD-approved methods on an annual basis and for each time a different demulsifier agent product is used.

(viii) *NGL Data* - Through use of its DCS system, ExxonMobil shall monitor the ratio at which the NGLs are injected into the treated crude oil prior to storage in the Oil Tanks as well as the amount of NGL injected for each day.

(d) Recordkeeping: The equipment listed in this section is subject to all the recordkeeping requirements listed in APCD Rule 325.F (for Group A and B units), NSPS Subpart Kb (for Group A units) and Table 10.3. ExxonMobil shall maintain hardcopy records for the information listed below:

(i) For each PSV event for Group A units, log: the date, time and duration the PSV was open (include start/stop times); the vapor headspace properties (pressure relief set-point, molecular weight, weight percent of ROC in the vapor); the volume of vapor released (based on manufacturer flow data); the calculated mass emissions for ROC. The mass emissions from each PSV and the cumulative mass emissions for each tank shall be summarized in a log on a daily, quarterly and annual basis.

(ii) Log the parameters as required by the APCD-approved NSPS Kb *Operating Plan*.

(iii) For each carbon canister, log the results of every OVA check (including all test results and lab analyses).

(iv) For the venturi scrubber, log the weekly reading of the caustic solution concentration in the scrubber and any measured hydrogen sulfide results at the outlet.

(v) For the Group B and C units, log any changes in service type and provide an explanation of the change(s) that occurred.

(vi) For the Group A and D units, log the throughput on a daily, quarterly and annual basis.

(vii) For the Group A and D units, log all Reid vapor pressure and temperature readings of the liquid stored as well the corresponding true vapor pressure values. Log all changes in demulsifier agents used and maintain a copy of the MSDS sheet for the new agent with the log. Vendor RVP and TVP data will be accepted for Group D units.

(viii) For the Oil Storage Tanks, record each day (via the DCS) the minimum and maximum daily ratio at which the NGLs are injected into the treated crude oil prior to storage in these tanks as well as the total amount of NGL injected each day.

(e) Reporting: On a semi-annual basis, a report detailing the previous six month's activities shall be provided to the APCD. The report must list all data required by the *Compliance Verification Reports* condition of this permit. [*Re: ATC 5651, PTO 5651, ATC/PTO 5651-01, ATC/PTO 10172]*

C.7 **Solvent Usage.** The following equipment are included in this emissions unit category:

Device Name	ExxonMobil ID	APCD DeviceNo
Solvent Usage		
Cleaning/Degreasing		5740

(a) Emission Limits: Mass emissions from the solvent usage shall not exceed the limits listed in Tables 5.3 and 5.4. Compliance shall be based on the recordkeeping and reporting requirements of this permit. For short-term emissions, compliance shall be based on monthly averages.

(b) Operational Limits: Use of solvents for cleaning, degreasing, thinning and reducing shall conform to the requirements of APCD Rules 317 and 324. Compliance with these rules shall be assessed through compliance with the monitoring, recordkeeping and reporting conditions in this permit and facility inspections. In addition, ExxonMobil shall comply with the following:

(i) *Containers* - Vessels or containers used for storing materials containing organic solvents shall be kept closed unless adding to or removing material from the vessel or container.

(ii) *Materials* - All materials that have been soaked with cleanup solvents shall be stored, when not in use, in closed containers that are equipped with tight seals.

(iii) *Solvent Leaks* - Solvent leaks shall be minimized to the maximum extent feasible or the solvent shall be removed to a sealed container and the equipment taken out of service until repaired. A solvent leak is defined as either the flow of three liquid drops per minute or a discernable continuous flow of solvent.

(iv) *Reclamation Plan* - ExxonMobil shall abide by the procedures identified in the APCD approved Solvent Reclamation Plan that describes the proper disposal of any reclaimed solvent. All solvent disposed of pursuant to the APCD approved Plan will not be assumed to have evaporated as emissions into the air and, therefore, will not be counted as emissions from the source. The Plan details all procedures used for collecting, storing and transporting the reclaimed solvent. Further, the ultimate fate of these reclaimed solvents must be stated in the Plan.

(c) Monitoring: none

(d) Recordkeeping: ExxonMobil shall record in a log the following on a monthly basis for each solvent used: amount used; the percentage of ROC by weight (as applied); the solvent density; and the amount of solvent reclaimed for APCD-approved disposal according to the APCD-approved *Solvent Reclamation Plan*. Based on the APCD approved Solvent Reclamation Plan, ExxonMobil shall also record whether the solvent is photochemically reactive; and, the resulting emissions of ROC to the atmosphere in units of pounds per month and the resulting emissions of photochemically reactive solvents to the atmosphere in units of pounds per month. Product sheets (MSDS or equivalent) detailing the constituents of all solvents shall be maintained in a readily accessible location at LFC.

(e) Reporting: On a semi-annual basis, a report detailing the previous six month's activities shall be provided to the APCD. The report must list all data required by the *Compliance Verification Reports* permit condition below. [*Re: ATC 5651, PTO 5651]*

C.8 **Sulfur Recovery Unit/Waste Gas Incinerator.** The following equipment are included in this emissions unit category:

Device Name	ExxonMobil ID	APCD DeviceNo
Sulfur Recovery Unit/Waste Gas Incinerator		
Claus Reactors	MBA-4147A, B, C	
SRU Combustor	EAL-4604	
Tailgas Cleanup Unit	EAL-4602	7868
Merox Process	MBJ-4136	7867
Waste Gas Incinerator	EAL-4603	106448

(a) Emission Limits: Mass emissions from the SRU TGCU Waste Gas Incinerator ("WGI") shall not exceed the limits listed in Tables 5.3 and 5.4. Compliance shall be based on sliding-one hour readings of 15-minute averages (or less) through the use of process monitors (e.g., fuel use meters) and CEMS; and the monitoring, recordkeeping and reporting condition of this permit. For pollutants without CEMS monitors, the permitted emission factors in Table 5.2 shall be used. In addition, the following specific emission limits apply:

(i) *BACT* – Except during the startup, shutdown or maintenance modes (as defined herein), the emissions, after control, from the WGI shall not exceed the BACT limits listed below and in Table 4.2 (*BACT Performance Standards*). Compliance shall be based on annual source testing for all pollutants. For NO_x and SO_x only, compliance with the emission concentrations listed in Table 4.2 shall be determined on a continuous basis using CEMS (based on a 60-minute clock average). Compliance for the SO_x shall also be based on the APCD-approved Sulfur Removal Efficiency Plan.

BACT for the Removal of H_2S through the SRU	
OPERATIONAL MODE	REMOVAL EFFICIENCY (% BY MASS AS H_2S)
All SRU Inlet Feed Rates to 20 LTD [11]	The more stringent of: 99.9% H_2S by mass across SRU; or 100 ppmvd residual H_2S in Tail Gas;

(ii) *Ammonia Slip* – Except during the Startup/Shutdown Mode, the concentration of ammonia from the WGI stack shall not exceed 20 ppmv. Compliance shall be based on absorbent tubes, source tests or bag samples.

(iii) *NSPS Subpart LLL* - Per 40 CFR 60.642(b), ExxonMobil shall comply with the SO_2 emission reduction efficiencies as listed below and in Table 2 of the Subpart. Compliance with this Subpart shall be based on the monitoring, recordkeeping and reporting requirements of this permit, the APCD-approved Sulfur Removal

[11] Expressed as long tons per day ("LTD") of total elemental sulfur mass based on H_2S (only) in the acid gas feed to the SRU. This is a calculated value using the LFC acid gas H_2S daily samples and the acid gas feed volume meters (F-40074, F-40176, and F-10445). All plant inlet H_2S is assumed to be fed to the SRU.

Efficiency Plan, and NSPS Subpart LLL. The Subpart LLL efficiency limits are enforced on a daily basis.

NSPS LLL for the Removal of Total Reduced Sulfur Removal by SRU	
OPERATIONAL MODE	REMOVAL EFFICIENCY (% BY MASS TOTAL SULFUR) [12]
≤ 5 LTD	74.0
>15 LTD to 20 LTD [15]	90.8

(iv) *Planned SGTP Startup, Shutdown and Maintenance SO_x Emission Limits* - Emissions of SO_x (as SO_2) from the WGI shall not exceed mass emissions listed in Tables 5.3 and 5.4 during any SGTP startup, shutdown or maintenance activity as defined herein. Startup is defined as the period of time not to exceed 48-hours following the introduction of sour gas into the SGTP. Shutdown is defined as the 12-hour period following cessation of inlet sour gas streams (measured by FE 10212, FE 40004) to the SGTP. Maintenance is defined as the period of time not to exceed 24-hours required for conducting planned shutdown events that impact WGI emissions (e.g., sulfur catalyst strip). ExxonMobil shall not exceed 84 hours per quarter and 84 hours per year for all planned SGTP startup, shutdown and maintenance activities. Compliance shall be based on the monitoring, recordkeeping and reporting requirements of this permit.

(b) Operational Limits: All process operations from the equipment listed in this section shall meet the requirements of APCD Rule 311.A.2, the BACT requirements listed in Tables 4.1 and 4.2, and the requirements of NSPS Subpart LLL. Compliance with these limits shall be assessed through compliance with the monitoring, recordkeeping and reporting conditions in this permit. In addition, ExxonMobil shall:

(i) *Thermal $DeNO_x$* – The Thermal $DeNO_x$ system shall be used at all times when the WGI is in operation. The Thermal $DeNO_x$ system shall meet a minimum NO_x control efficiency of 50 percent (mass basis). Compliance shall be based on source testing and by maintaining the NO_x outlet set-point for the Thermal $DeNO_x$ system at 9 ppmv. ExxonMobil may request APCD written approval to revise the NO_x outlet set-point value to another value based on source test results.

(ii) *Low-NO_x Burners* - Low-NO_x burners shall be used at all times when the WGI is in operation.

(iii) *Fuel Gas Sulfur Limit* - ExxonMobil shall use pipeline quality natural gas at all times. The natural gas shall contain total sulfur in concentrations not exceeding 24 ppmvd. Compliance with this condition shall be based on monitoring, recordkeeping and reporting requirements of this permit.

(iv) *Usage Limits* – ExxonMobil shall comply with the follow usage limits:

[12] TRS removal efficiency across SRU is defined as the percent reduction of the plant inlet elemental sulfur in LTD (based on H_2S only) from the elemental sulfur emitted to the atmosphere as measured by the WGI SOx analyzer (A-40698).

(1) Fuel Gas Heat Input: 11.05 MMBtu/hr; 265 MMBtu/day; 24,200 MMBtu/quarter; 96,798 MMBtu/year
(2) Inlet WGI Flow Rate from TGCU Amine Contactor: 133.68 kscfh
(3) Inlet WGI Flow Rate from Merox Vent: 0.37 kscfh
(4) Compliance shall be based on the monitoring, recordkeeping and reporting requirements of this permit.

(v) *Operating Load Restriction* - Consistent with APCD P&P 6100.039, ExxonMobil shall not operate the WGI above loads observed during compliance source testing. ExxonMobil shall perform a compliance source test within sixty (60) days of the fuel gas heat input to the WGI exceeding 7.00 MMBtu/hr (averaged over rolling 30 days). Should the rolling thirty (30) day average fall below 7.00 MMBtu/hr prior to the scheduled source test, the source test may be delayed at the discretion of the APCD. This process shall be repeated for new operating load restrictions of 8.00 MMBtu/hr, 9.00 MMBtu/hr and then 10.00 MMBtu/hr, until a compliance source test is observed at a fuel gas heat input to the WGI exceeding 10.00 MMBtu/hr. Within two (2) business days of occurring, ExxonMobil shall notify the APCD once the applicable operating load restriction is exceeded.

(c) Monitoring: ExxonMobil shall monitor the emission and process parameters listed in Table 10.2 for the life of the project. ExxonMobil shall perform annual source testing of the WGI consistent with the requirements listed in Table 4.6 and the source testing permit condition below. In addition, ExxonMobil shall:

(i) Continuously monitor the fuel gas using H_2S and HHV analyzers.

(ii) Perform quarterly total sulfur content measurements of the fuel gas using ASTM or other APCD-approved methods. ExxonMobil shall utilize APCD-approved sampling and analysis procedures.

(iii) ExxonMobil shall implement the APCD-approved Sulfur Removal Efficiency Plan which describes the monitoring and sampling procedures for determining sulfur removal efficiency for the SRU as defined in NSPS Subpart LLL and in the BACT Performance Standards (Tables 4.1 and 4.2).

(d) Recordkeeping: ExxonMobil shall record the emission and process parameters listed in Table 10.2. In addition, ExxonMobil shall maintain hardcopy records of the following:

(i) The daily, quarterly and annual heat input in units of million Btu for the fuel gas to the WGI. In addition, the five highest hourly heat input rates per month in units of MMBtu/hr.

(ii) The daily, quarterly and annual Inlet Tail Gas Flow Rate from the TGCU Amine Contactor in units of standard cubic feet to the incinerator. In addition, the five highest hourly flow rates per month in units of standard cubic feet per hour.

(iii) The daily, quarterly and annual Inlet Flow Rate from Merox Vent in units of standard cubic feet to the incinerator. In addition, the five highest hourly flow rates per month in units of standard cubic feet per hour.

(iv) *Startup, Shutdown, and Maintenance Logs* - Documentation (Log) of the actions taken by ExxonMobil to minimize emissions during each WGI startup, shutdown and maintenance activity (as defined herein) shall be maintained. This documentation (Log) shall include a timeline of each activity showing: the activity start and stop time (including duration); the type of activity; the fuel gas heat input; the temperature, the hourly concentrations of NO_x and SO_x; and the mass emissions of all criteria pollutants for the entire activity duration.

(1) The log shall also include the date, duration, and emissions for each SGTP startup, shutdown, and maintenance activity, and the cumulative for all activities associated with the SGTP.

(v) *Sulfur Removal Efficiency*– On a daily basis ExxonMobil shall maintain in a log or electronic file:

(1) The percent H_2S reduction across the SRU;
(2) The maximum H_2S mass flow rate (lb/hr) in the Tail Gas;
(3) The maximum Tail Gas H_2S concentration;
(4) The percent total sulfur reduction across the SRU;
(5) The maximum peak SO_2 emission rate (lb/hr) from the WGI;
(6) The total SO_2 emissions (in lb/day) from the WGI.

(e) Reporting: On a semi-annual basis, a report detailing the previous six month's activities shall be provided to the APCD. The report must list all data required by the *Compliance Verification Reports* condition of this permit. [*Re: ATC 5651, PTO 5651, ATC/PTO 5651-01]*

C.9 **Recordkeeping.** All records and logs required by this permit and any applicable APCD, state or federal rule or regulation shall be maintained for a minimum of five calendar years from the date of information collection and log entry at the Las Flores Canyon facility. These records or logs shall be readily accessible and be made available to the APCD upon request. During this five-year period, and pursuant to California Health & Safety Code Sections 42303 and 42304, such data shall be available to the APCD at LFC within a reasonable time period after request by the APCD. This requirement applies to data required by this permit and archived by ExxonMobil's DCS, PI and any other data-storage systems including but not limited to charts and manual logs. With the exception of CEMS data, prior to archiving any required data from the data-storage system, ExxonMobil shall prepare written reports and maintain these reports in 3-ring binders at the LFC facility. CEMS data shall be kept consistent with the requirements of ExxonMobil's APCD-approved CEMS Plan. Failure to make such data available within the noted period shall be a violation of this condition. Further, retrieval of historical or archived data shall not jeopardize the logging of current data. [*Re: ATC 5651, PTO 5651]*

C.10 **Compliance Verification Reports.** Twice a year, ExxonMobil shall submit a compliance verification report to the APCD. Each report shall document compliance with all permit, rule or other statutory requirements during the prior two calendar quarters. The first report shall cover calendar quarters 1 and 2 (January through June) and the second report shall cover calendar quarters 3 and 4 (July through December). The reports shall be submitted by March 1st and September 1st each year. Each report shall contain information necessary to verify compliance with the emission limits and other requirements of this permit and shall document compliance separately for each calendar quarter. These reports shall be in a format approved by the APCD. Compliance with all limitations shall be documented in the submittals. All logs and other basic

source data not included in the report shall be made available to the APCD upon request. The second report shall also include an annual report for the prior four quarters. Pursuant to Rule 212, a completed *APCD Annual Emissions Inventory* questionnaire should be included in the annual report or submitted electronically via the APCD website. ExxonMobil may use the Compliance Verification Report in lieu of the Emissions Inventory questionnaire if the format of the CVR is acceptable to the APCD's Emissions Inventory Group and if ExxonMobil submits a statement signed by a responsible official stating that the information and calculations of quantifies of emissions of air pollutants presented in the CVR are accurate and complete to best knowledge of the individual certifying the statement. The report shall include the following information:

(a) *Cogeneration Power Plant.*

(i) By operating mode, the daily, quarterly and annual heat input in units of million Btu for the gas turbine and HRSG. In addition, the five highest hourly heat input rates per month in units of million Btu/hr for the gas turbine and HRSG.

(ii) The length of time (in hours) that the CPP was operated in the Startup/Shutdown mode by day, quarter and year. A copy of CPP Startup/Shutdown Documentation log for the reporting period.

(b) *Thermal Oxidizer*.

(i) The volumes of gas combusted and resultant mass emissions for each flare category (i.e., Purge/Pilot; Continuous – LP; Continuous – AG; Planned Other; Unplanned - Other), shall be presented as a cumulative summary for each day, quarter and year.

(ii) The highest total sulfur content and hydrogen sulfide content observed each week in the LP header, HP header, Acid Gas header and Fuel Gas header combusted during all flaring events. This reporting requirement is inclusive of flaring events triggering automatic sampling and flaring events not triggering automatic sampling as defined in condition 9.C.2.c.v.

(iii) The estimated amount of ammonia combusted in the thermal oxidizer listed by each Ammonia Tank Loading event for the reporting period.

(iv) A copy of Flare Event Log for the reporting period. Include a separate listing of all planned infrequent events that occurred more than four times per year from the same cause from the same processing unit or equipment type.

(v) Any other information required by APCD Rule 359.H.

(c) *Fugitive Hydrocarbons*. Rule 331/Enhanced Monitoring fugitive hydrocarbon I&M program data (on a quarterly basis):

(i) Inspection summary which includes a record of the total components inspections and the total number and percentage found leaking by component type, inspection frequency, and leak detection threshold (i.e. the component "Category" as defined in APCD Permit Guideline Document 15). The record shall also specify leaks from critical components.

(ii) Record of leaks from components that incur five repair actions within a continuous 12-month period.

(iii) Record of leaking components and associated component repair actions including dates of component re-inspections.

(iv) Listing of components installed as BACT during the reporting year as approved by the APCD.

(d) *Crew and Supply Boats*.

(i) Daily, quarterly and annual fuel use for the crew boat main engines and auxiliary engines and supply boat main and auxiliary engines (including the bow thruster engine) shall be reported in the CVR's for Platforms Hondo, Heritage, and Harmony. (Part 70 PTO's 9100, 9101, and 9102)

(e) *Pigging*. The number of pigging events per day, quarter and year.

(f) *Tanks/Sumps/Separators*.

(i) For each PSV event for Group A units, the date, time and duration each PSV was open (include start/stop times); the vapor headspace properties (pressure relief set-point, molecular weight, weight percent of ROC in the vapor); the volume of vapor released (based on manufacturer flow data); the calculated mass emissions for ROC. The mass emissions from each PSV and the cumulative for each tank summarized on a daily, quarterly and annual basis.

(ii) For the Group A and D units, the throughput on a daily, quarterly and annual basis.

(iii) For the Group B and C units, list any changes in service type and provide an explanation of the change(s) that occurred.

(iv) A copy of all LFC Carbon Canister Monitoring and Maintenance Logs.

(g) *Solvent Usage*. On a monthly basis: the amount of solvent used; the percentage of ROC by weight (as applied); the solvent density; the amount of solvent reclaimed; whether the solvent is photochemically reactive; and, the resulting emissions of ROC and photochemically reactive solvents to the atmosphere in units of pounds per month.

(h) *Sulfur Recovery Unit/Waste Gas Incinerator*.

(i) The daily, quarterly and annual heat input in units of million Btu for the fuel gas to the incinerator. In addition, the five highest hourly heat input rate per month in units of million Btu/hr.

(ii) The daily, quarterly and annual Inlet Tail Gas Flow Rate from the TGCU Amine Contactor to the WGI in units of standard cubic feet. In addition, the five highest hourly flow rates per month in units of standard cubic feet per hour.

(iii) The daily, quarterly and annual Inlet Flow Rate from Merox Vent to the WGI in units of standard cubic feet. In addition, the five highest hourly flow rates per month in units of standard cubic feet per hour.

(iv) Summary of all SGTP startup, shutdown and maintenance activities including the date, duration and emissions for each activity and the cumulative for all activities. The summary shall also include the WGI Documentation Log for WGI Startup/Shutdown/Maintenance Activity.

(i) *Ambient Monitoring*. Reports as required by ExxonMobil's AQMM R&O Plan.

(j) *Facility Throughput Data*.

(i) The amount of wet oil (oil/water emulsion) treated and dry oil produced from the Oil Treating Plant per day in units of barrels.

(ii) The amount of sweet gas produced in the stripping gas treating plant per day in units of million standard cubic feet.

(iii) The amount of oil exported from the Transportation Terminal for each calendar quarter.

(k) *Backup Gas Sweetening Unit (BUGSU)*. A summary of each use of the BUGSU including the date of use and the reason for its use. In addition, a copy of the Daily BUGSU Log for the reporting period.

(l) *General Reporting Requirements*.

(i) On quarterly basis, the emissions from each permitted emission unit for each criteria pollutant. The fourth quarter report shall include tons per year totals for all pollutants, by each emission unit and totaled.

(ii) On quarterly basis, the emissions from each exempt emission unit including CARB certified equipment used at the facility, for each criteria pollutant. The fourth quarter report shall include tons per year totals for all pollutants, by each emission unit and totaled.

(iii) ExxonMobil shall submit with each required semi-annual report two quarterly CEMS Reports. The CEMS Reports shall follow the format and provide the information detailed in Section 7 of the APCD-approved CEMS Plan.

(iv) A summary of each and every occurrence of non-compliance with the provisions of this permit, APCD rules, NSPS and any other applicable air quality requirements with excess emissions that accompanied each occurrence.

(v) The amount, in units of gallons, and source (by monthly reports summarized quarterly) of LNG, NGL, liquid hydrocarbons or combinations thereof, shipped from the Las Flores Canyon facility and the number and size of trucks used.

(vi) The amount, in units of long tons, and source (by monthly reports summarized quarterly) of sulfur shipped from the Las Flores Canyon facility and the number and size of trucks used.

(vii) The produced gas, produced oil, fuel gas, and produced wastewater process stream analyses as required by condition 9.C.13 of this permit.

(viii) A copy of all completed APCD–10 forms (*IC Engine Timing Certification Form*).

(ix) A copy of the Rule 202 De Minimis Log for the stationary source.

(x) A summary of the results of all compliance emission source testing performed for the CPP, Tanks, Sumps, and Separators, and the SRU/WGI completed during the reporting year.[*Re: ATC 5651, PTO 5651, ATC/PTO 10172*]

(xi) Quarterly analysis of the total sulfur content of the fuel gas used by the CPP and WGI.

(xii) The five highest quarterly recorded values of the hydrogen sulfide content and the five highest quarterly recorded higher heating values of the fuel gas used in the CPP and WGI.

C.11 **BACT.** ExxonMobil shall apply emission control and plant design measures which represent Best Available Control Technology (BACT) to the operation of the Las Flores Canyon facilities as described in Section 4.10 and Tables 4.1, 4.2 and 4.3 of this permit. BACT measures shall be in place and in operation at all times for the life of the project. [*Re: ATC 5651, PTO 5651*]

C.12 **Source Testing.** The following source testing provisions shall apply:

(a) ExxonMobil shall conduct source testing of air emissions and process parameters listed in Section 4.13 and Tables 4.5, 4.6 and 4.7 of this permit. More frequent source testing may be required if the equipment does not comply with permitted limitations or if other compliance problems, as determined by the APCD, occur. Source testing shall be performed on an annual schedule (except as specifically noted) using December/January as the anniversary date for the CPP and March/April as the anniversary date for the SGTP and the Equalization Tank.

(b) ExxonMobil shall submit a written source test plan to the APCD for approval at least thirty (30) days prior to initiation of each source test. The source test plan shall be prepared consistent with the APCD's Source Test Procedures Manual (revised May 1990 and any subsequent revisions). ExxonMobil shall obtain written APCD approval of the source test plan prior to commencement of source testing. The APCD shall be notified at least ten (10) calendar days prior to the start of source testing activity to arrange for a mutually agreeable source test date when APCD personnel may observe the test.

(c) Source test results shall be submitted to the APCD within forty-five (45) calendar days following the date of source test completion and shall be consistent with the requirements approved within the source test plan. Source test results shall document ExxonMobil's compliance status with BACT requirements, mass emission rates in Section 5 and applicable permit conditions, rules and NSPS (if applicable). All APCD costs associated

with the review and approval of all plans and reports and the witnessing of tests shall be paid by ExxonMobil as provided for by APCD Rule 210.

(d) A source test for an item of equipment shall be performed on the scheduled day of testing (the test day mutually agreed to) unless circumstances beyond the control of the operator prevent completion of the test on the scheduled day. Such circumstances include mechanical malfunction of the equipment to be tested, malfunction of the source test equipment, delays in source test contractor arrival and/or set-up, or unsafe conditions on site. Except in cases of an emergency, the operator shall seek and obtain APCD approval before deferring or discontinuing a scheduled test, or performing maintenance on the equipment item on the scheduled test day. If the test can not be completed on the scheduled day, then the test shall be rescheduled for another time with prior authorization by the APCD. Once the sample probe has been inserted into the exhaust stream of the equipment unit to be tested (or extraction of the sample has begun), the test shall proceed in accordance with the approved source test plan. In no case shall a test run be aborted except in the case of an emergency or unless approval is first obtained from the APCD. Failing to perform the source test of an equipment item on the scheduled test day without a valid reason and without APCD's authorization shall constitute a violation of this permit. If a test is postponed due to an emergency, written documentation of the emergency event shall be submitted to the APCD by the close of the business day following the scheduled test day.

(e) The timelines in (a), (b), and (c) above may be extended for good cause provided a written request is submitted to the APCD at least three (3) days in advance of the deadline, and approval for the extension is granted by the APCD. [*Re: ATC 5651, PTO 5651*]

C.13 **Process Stream Sampling and Analysis.** ExxonMobil shall sample and analyze the process streams listed in this Section 9.0 according to the specified methods and frequency detailed therein. All process stream samples shall be taken according to APCD-approved ASTM methods and must follow traceable chain of custody procedures. In addition, the following process streams are required to be sampled and analyzed. Duplicate samples are required:

(a) Produced Gas: Sample taken at production separator outlet. Analysis for: HHV, total sulfur, hydrogen sulfide, composition. Samples to be taken on an annual basis.

(b) Produced Oil: Sample taken at outlet from production separator. Analysis for: API gravity; true vapor pressure (per Rule 325 methods). Samples to be taken on an annual basis.

(c) Fuel Gas: For SGTP provided gas, samples will be taken at the Fuel Gas Scrubber (MBF-2102) and analyzed for HHV, total sulfur, H_2S, and composition on a quarterly basis. Additionally, SGTP provided gas will be continuously monitored for HHV and H_2S.

(i) Utility supplied gas shall be sampled for HHV, H_2S, total sulfur and composition on a quarterly basis. For the purposes of compliance with this permit, ExxonMobil may utilize the results of samples taken by POPCO (reference POPCO Part 70/PTO No. 8092 Section 9.C.1(c)(vi)). During periods when the POPCO facility is off-line and the LFC facility is on-line and purchasing utility supplied gas, ExxonMobil shall

sample the utility supplied gas adjacent to FCV-40616, or other APCD-approved location, if POPCO remains off-line for more than 14 days.

(ii) On a continuous basis, the fuel gas produced by the SGTP and used in the CPP and WGI shall be sampled for the higher heating value and the hydrogen sulfide content (as determined by APCD-approved ASTM methods). These records may be maintained in an electronic format. On a quarterly basis, sample the fuel gas used in the CPP and WGI for the total sulfur content (as determined by APCD-approved ASTM methods).

(d) Produced Wastewater: Streams are analyzed for ROC content necessary to maintain compliance with Rule 325.B. Samples to be taken on an annual basis.

(i) All sampling and analyses are required to be performed according to APCD-approved procedures and methodologies. All sampling and analysis must be traceable by chain of custody procedures. [*Re: ATC 5651, PTO 5651,ATC/PTO 10806*]

C.14 **Offsets and Consistency with the AQAP.** ExxonMobil shall comply with all the procedures and requirements specified in Section 7 of this document including all requirements for offsets, source testing and reporting. ExxonMobil shall provide the following offsets:

(a) ExxonMobil shall offset the net emission increase (NEI) resulting from operation of the Las Flores Canyon facility as detailed in Chapter 7 and Tables 7.1, 7.2, 7.3 and 7.4.

(b) In order to mitigate potential ozone impacts from the Santa Ynez Unit Expansion Project and for consistency with reasonable further progress for attainment of the federal ozone standard and FDP Condition XII-3.b, ExxonMobil shall mitigate all operation phase emissions, which are shown in Table 7.5, and as specified in Section 7.0 of this permit. Through the implementation of the procedures specified above, the APCD is able to make the finding that the project will result in a net air quality benefit and is consistent with the AQAP, as necessary for the issuance of this permit.

(c) Notwithstanding any force majeure, termination, or transfer provision contained in the agreements referenced above, ExxonMobil will offset all SYU project emissions at the ratios specified in Chapter 7. If offsets are not in place as required by this permit, ExxonMobil shall provide replacement offsets and shall obtain variance relief. [*Re: ATC 5651, PTO 5651*]

C.15 **Continuous Emission Monitoring ("CEM").** ExxonMobil shall implement a CEM program for emissions and process parameters as specified in Section 4.12 and Attachment 10.1 of this permit. ExxonMobil shall implement the APCD-approved CEM Plan. The CEM monitors shall be in place and functional for the life of the project. The APCD shall use the CEM data alone or in combination with other data, to verify and enforce project conditions. Excess emissions indicated by the CEM systems shall be considered a violation of the applicable emission limits.

(a) On quarterly basis, ExxonMobil shall submit data for CEM downtime and CEM detected excess emissions in a format approved by the APCD. This report shall be submitted each quarter in accordance with the requirements of Rule 328. [*Re: ATC 5651, PTO 5651*]

C.16 **Process Monitoring Systems - Operation and Maintenance.** All LFC facility process monitoring devices listed in Section 4.12 of this permit shall be properly operated and maintained according to manufacturer recommended specifications. ExxonMobil shall implement the APCD approved *Continuous Emissions Monitoring Plan* for the life of the project. This Plan details the manufacturer recommended maintenance and calibration schedules. Where manufacturer guidance is not available, the recommendations of comparable equipment manufacturers and good engineering judgment is utilized. [*Re: ATC 5651, PTO 5651*]

C.17 **Data Telemetry.** ExxonMobil shall telemeter monitoring data to the APCD as specified by Conditions C.40 (*Ambient Monitoring Requirements*), C.15 (*Continuous Emission Monitoring*) and C.41 (*Odor Monitoring Plan*) of this permit. The data telemetry equipment shall be in place and functional for the life of the project consistent with the above-specified conditions. This telemetry equipment shall be compatible with the APCD's Central Data Acquisition System. [*Re: ATC 5651, PTO 5651*]

C.18 **Central Data Acquisition System.** This system shall receive and analyze continuous emissions data from ExxonMobil CEMs (as specified in Condition C.15), ambient air monitoring and meteorological data (as specified in Conditions C.40), odor monitoring (as specified in Condition C.41) and any other data necessary to evaluate observed and potential air quality impacts either site-specific or regional. The central data acquisition system referred to in this permit condition is a unique and separate system from the system referred to in MOA II, Section 7, Page 8. [*Re: ATC 5651, PTO 5651*]

C.19 **Central Data Acquisition System Operation and Maintenance Fee.** By permit condition C.17, ExxonMobil shall connect certain Continuous Emission Monitors (CEM) and all ambient, meteorological, and odor parameters to the APCD central data acquisition system (DAS). In addition, ExxonMobil shall reimburse the APCD for the cost of operating and maintaining the DAS. ExxonMobil shall be assessed an annual fee, based on the APCD's fiscal year, collected semi-annually.

(a) Pursuant to Rule 210 III.A., ExxonMobil shall pay fees specified in Table 9.2. The APCD shall use these fees to operate, maintain, and upgrade the DAS in proper running order. Fees shall be due and payable pursuant to governing provisions of Rule 210, including CPI adjustments.

Table 9.2 Fees for DAS Operation and Maintenance[(i), (ii)]

FEE DESCRIPTION	FEE
Per CEM, ambient or meteorological parameter required by permit to be transmitted real-time to the APCD Central Data Acquisition System	$1,307 annually

(i) All fees shall be due and payable pursuant to the governing provisions of Rule 210, including CPI adjustments.

(ii) The fees in this table are based on the APCD's March 27, 1998 letter (*Fixed Fee Proposal for Monitoring and DAS Costs*) and may be updated pursuant to Rule 210 and shall be effective when issued and shall not require a modification to this permit.

(b) All ongoing costs and anticipated future capital upgrades will be APCD's responsibility and will be accomplished within the above stated DAS fee. This fee is intended to cover the annual operating budget and upgrades of the DAS and is intended to gradually phase APCD into a share of the DAS costs {as outlined in the APCD's March 27, 1998 letter (*Fixed Fee Proposal for Monitoring and DAS Costs*)}. In the event that the assumptions used to establish this fee change substantially, the APCD may revisit and adjust the fee based on documentation of the cost of services. Adjusted fees will be implemented by transmitting a revised Table 9.2.

(c) The fees prescribed in this condition shall expire if and when the Board adopts a Data Acquisition System Operation and Maintenance Fee schedule and such fee becomes effective. [*Re: ATC 5651, PTO 5651*]

C.20 **Emissions Reduction Credit Certificate No. 0004-0103.** The 0.18 tpq of ROC ERCs created by ATC/PTO 9826 (Enhanced I&M by monthly monitoring of the 387 valves in gas service identified in Attachment 10.9) and incorporated into this permit are dedicated to ERC Certificate No. 0004-0103 only. [*Re: ATC 5651, PTO 5651*]

C.21 **Emissions Reduction Credits Dedicated to Specific Projects – ATC 9651.** The ERCs created under ATC and PTO 9651 are for use as offsets by ExxonMobil at Platforms Heritage and Harmony to satisfy the offsets requirements for emissions created by the compressor skid emission units permitted under PTO 9634 (Heritage) and PTO 9640 (Harmony) only. ExxonMobil shall meet the requirements of those permits in applying these ERCs. Emission reduction measures implemented to create the required emission reduction credits, monthly monitoring of the valves specified in ATC 5651-17/PTO 5651 (1/27/99), shall be in place and maintained for the life of each project. This permit does not authorize the dedication of these emission reductions to any other project. [*Re: ATC 5651, PTO 5651*]

C.22 **Mass Emission Limitations**. Except as noted in Conditions 9.C.1, 9.C.2 and 9.C.6, mass emissions for each equipment item (i.e., emissions unit) associated with ExxonMobil's Las Flores Canyon facilities shall not exceed the values listed in Tables 5.3 and 5.4. Emissions for the entire facility shall not exceed the total limits listed in Table 5.5. [*Re: ATC 5651, PTO 5651*]

C.23 **Permitted Equipment.** Only those equipment items listed in Section 2.2 are covered by the requirements of this permit and APCD Rule 201.E.2. ExxonMobil may petition the APCD to include any item not listed in Section 2.3 that ExxonMobil claims to have been constructed at the Las Flores Canyon facility under ATC 5651 (11/17/87) upon the submittal of creditable evidence. With the exception of the third Oil Train and the third phase of the Water Treatment Plant, any equipment item listed in Section 2.3 that is not constructed as of December 1, 1998 shall not be covered by this permit and an ATC permit shall be required for such construction. [*Re: ATC 5651, PTO 5651*]

C.24 **Facilities Approved for Future Construction.** This permit authorizes the future construction of a third Oil Train and the third phase of the Water Treatment Plant consistent with the design drawings and material balance documentation submitted by ExxonMobil and approved by the APCD under ATC 5651 (11/17/87). The specific component-leakpath inventory for the approved future construction is detailed in Attachment 10.8. At least sixty (60) days prior to constructing either of these two facilities, ExxonMobil shall provide the APCD the following:

(a) An updated project and process description including: process flow diagrams; piping and instrument diagrams; and, material balances.

(b) An update to the LFC Fugitive Hydrocarbon Inspection and Maintenance Program.

(c) A detailed listing of all fugitive component leak-paths, the associated service and resulting mass emission calculations.

(d) A BACT analysis for the new emission units taking into account the most current BACT technology and performance standards. At a minimum, BACT shall meet the technology and performance standards listed in Appendix 5.1 of the APCD's Rule 331 BACT Guidelines document (see Appendix 10.9). The APCD's approval shall be deemed as approval via ATC 5651-17.

(e) An offsets analysis. ExxonMobil shall show that the emissions increase from the new facilities has sufficient offsets.

(f) A detailed estimate of the NO_x and ROC construction emissions associated with building of each phase as well as a detailed listing of the equipment used.

(g) ExxonMobil shall obtain written APCD approval prior to commencement of construction. An ATC permit may be required if the proposed construction is inconsistent with the originally approved design. Upon APCD approval, ExxonMobil may temporarily operate the facility(ies) under a SCDP for a period no longer than 90 days. During this SCDP (defined as the introduction of hydrocarbon containing fluids), ExxonMobil shall request an APCD inspection no later than thirty (30) days after initiation of the SCDP. Upon submittal of a complete Permit to Operate application, ExxonMobil may continue to operate the facility(ies) for up to an additional ninety (90) days under this permit. No further SCDP extensions shall be authorized. [*Re: ATC 5651, PTO 5651*]

C.25 **Facility Throughput Limitations.** ExxonMobil shall process no more than 140,000 barrels per day of dry oil. The stripping gas treating plant shall not process more than 15 million standard cubic feet of platform gas, nor more than 21 million standard cubic feet of sour stripping gas and platform gas, combined. The oil and gas processed under this permit shall be produced only from the Hondo, Harmony, and Heritage platforms within the boundaries of the SYU area described in the project EIS/R and supplemental EIRs. The transportation terminal shall be used only for the export of a maximum of 125 thousand barrels of oil per day (averaged over a calendar quarter). Oil storage facilities shall be limited to a maximum working capacity of 509 thousand barrels of oil. If ExxonMobil wishes to process oil from platforms other than those listed above, ExxonMobil must modify, as appropriate, this permit.

(a) On a daily basis, ExxonMobil shall record in a log the volume of dry oil processed, the volume of platform gas processed and the volume of sour stripping gas processed. In addition, ExxonMobil shall log the volume of oil exported from the transportation terminal each day, summarized on a calendar quarter basis. [*Re: ATC 5651, PTO 5651*]

C.26 **Abrasive Blasting Equipment.** All abrasive blasting activities performed at the Las Flores Canyon facilities shall comply with the requirements of the California Administrative Code Title 17, Sub-Chapter 6, Sections 92000 through 92530. [*Re: ATC 5651, PTO 5651*]

C.27 **Vacuum Truck Use.** During vacuum truck use, ExxonMobil shall use an APCD-approved control device (i.e., carbon adsorption system or equivalent) to reduce emissions of reactive

organic compounds (ROC) and odorous compounds from the vacuum truck vent. ExxonMobil shall maintain a log of all vacuum truck operations. The log shall include for each use, the date, the location and equipment ID where vacuum truck operations occur, volume and description of material, reason for use, duration of the operation and any emission control maintenance activities. ExxonMobil shall implement the APCD-approved Vacuum Truck Operation & Maintenance Procedures document (approved June 14, 1993 and subsequent APCD-approved updates). [*Re: ATC 5651, PTO 5651*]

C.28 **Backup Gas Sweetening Unit (BUGSU)**:

(a) Emission Limitations: SO_2 emissions from the Thermal Oxidizer due to combustion of BUGSU sweetened gas shall not exceed: 0.1 lb/hr, 2.4 lb/day, 0.10 tpq, 0.10 tpy. Compliance with this limit shall be based upon the BUGSU outlet H_2S concentration and the BUGSU exhaust flow rate.

(b) Operational Limitations: The BUGSU shall only be used under one of the following conditions: (i) during commissioning of the water treatment plant; (ii) during planned plant turnarounds or extended periods of down time where the gas processing equipment is shut down; (iii) other APCD-approved usages such that SO_2/H_2S emissions can be effectively reduced; or, (iv) control of excess emissions related to equipment breakdowns. ExxonMobil shall notify the APCD by noon of the next business day after each usage of the BUGSU and shall operate the system consistent with the information contained in the permit application and/or APCD Breakdown rules.

(c) Monitoring, Recordkeeping and Reporting: For each use, ExxonMobil shall measure, on a daily basis, the H_2S concentration of the treated off-gas using absorbent tube analysis. For concentrations below 40 ppmvd, the exhaust flow rate shall be assumed to be 14.58 kcfh (350 kcfd). If the treated off-gas H_2S concentrations exceed 40 ppmvd, then ExxonMobil shall also measure the exhaust flow rate from the BUGSU and calculate hourly and daily SO_2 emissions. The flow rate measurements must commence within 24-hours of the H_2S concentration exceeding 40 ppmvd. The above information shall be recorded daily in a log. The flow measurement device shall be APCD approved.[*Re: ATC 5651, PTO 5651, ATC/PTO 5651-01*]

C.29 **Emergency Firewater/Floodwater Pumps.** The following equipment are included in this emissions unit category:

Device Type	ExxonMobil ID	APCD DeviceNo
Diesel Internal Combustion Engines		
Firewater Pump A	PBE-1396 A	1085
Firewater Pump B	PBE-1396 B	1086
Floodwater Pump	LFC-07	8122

(a) Operational Limits**:**

(i) The onshore diesel-fired firewater pumps shall not be operated for more than 30 minutes at any one time for maintenance and testing. Each firewater and floodwater pump engine shall not operate more than a total of 390 minutes each per calendar

quarter for maintenance and testing. Each pump engine shall be equipped with a non-resettable hour meter.

(ii) *Particulate Matter Emissions* - To ensure compliance with APCD Rules 205.A, 302, 305, 309 and the California Health and Safety Code Section 41701, and Section 93115 ExxonMobil shall implement manufacturer recommended operational and maintenance procedures to ensure that all project diesel-fired engines minimize particulate emissions. ExxonMobil shall implement the APCD approved *IC Engine Particulate Matter Operation and Maintenance Plan* for the life of the project. This Plan details the manufacturer recommended maintenance and calibration schedules that ExxonMobil will implement. Where manufacturer guidance is not available, the recommendations of comparable equipment manufacturers and good engineering judgment shall be utilized.

(iii) Diesel fuel used by all diesel-fired engines shall have a sulfur content no greater than 0.0015 weight percent.

(b) Recordkeeping: ExxonMobil shall maintain records as required by Rule 333 Section H. Copies of all engine inspection and maintenance logs shall be retained onsite for at least two years after the date of the last entry and shall be made available to the APCD upon request:

(i) Hours of operation each month for each engine;

(ii) ExxonMobil shall maintain an operating log detailing for each use: the start and stop times, the duration of use, the reason for use, the aggregate number of minutes each pump is operated quarterly and annually.

(iii) ExxonMobil shall maintain fuel-use records for each engine and fuel purchase records demonstrating compliance with the sulfur content limit and shall make such information available to the APCD upon request.

(c) Reporting: The equipment listed in this section are subject to all the reporting requirements listed in APCD Rule 333.H. On a semi-annual basis, a report detailing the previous six month's activities shall be provided to the APCD. The report must list all data required by the *Compliance Verification Reports* condition of this permit as well as the information required by and Section H of Rule 333. [*Re: ATC 5651, PTO 5651, ATC/PTO 5651-01, PTO 11600, PTO 11601*]

C.30 **Transportation Terminal Operational Limits.** ExxonMobil shall operate the onshore transportation terminal consistent with the information and data used for the analysis that determined the requirements of this permit. Oil transportation via the Las Flores Canyon Marine Terminal is not authorized by this permit. [*Re: ATC 5651, PTO 5651*]

C.31 **Purging/Degassing of Vessels to the Atmosphere.** ExxonMobil shall use the vapor recovery system or flare system when degassing or purging or blowing down any tank, vessel or container that contains reactive organic compounds or reduced sulfur compounds. This plan shall detail ExxonMobil's procedures for degassing/purging tanks, vessels and containers prior to operations which require they be opened to the atmosphere. ExxonMobil shall implement the APCD approved *Purging/Degassing* Plan for the life of the project. [*Re: ATC 5651, PTO 5651*]

C.32 **As-Built Drawings.** ExxonMobil shall maintain current "as-built" drawings (P&IDs and PFDs) for the Las Flores Canyon facility and make them available for inspection upon request. [*Re: ATC 5651, PTO 5651*]

C.33 **Particulate Matter Mitigation.** ExxonMobil shall implement the PM_{10} mitigation requirements as specified by the up-coming APCD *PM_{10} Attainment Plan*. The APCD will use, in part, the *Particulate Matter Emission Reduction Study*, dated June 1991, as a basis for development of control measures in the PM_{10} Attainment Plan. Within one year of notification by the APCD, ExxonMobil shall implement PM_{10} control measures identified in the future *PM_{10} Attainment Plan* on appropriate equipment regulated by APCD permits. [*Re: ATC 5651, PTO 5651*]

C.34 **Flare Study.** In order to eliminate or reduce AQIA projected air quality standard or increment violations associated with flaring events, ExxonMobil shall implement the recommendations of the *Phase II Flare Study* within 24 months of the completion of the study. ExxonMobil shall obtain the necessary permits from affected agencies, including the APCD, as required prior to making the modifications. [*Re: ATC 5651, PTO 5651*]

C.35 **Consolidation.** Consistent with the consolidation modeling results conducted as part of ATC 5651(11/17/87), ExxonMobil shall cooperate with ARCO and other Las Flores Canyon users to develop the necessary plans to insure that the testing of ExxonMobil's emergency firewater/floodwater pumps do not occur at the same time as that of the back-up and emergency equipment of the other Las Flores Canyon Facilities which cause air emissions. [*Re: ATC 5651, PTO 5651*]

C.36 **Documents Incorporated by Reference.** The documents listed below, including any APCD-approved updates thereof, are incorporated herein and shall have the full force and effect of a permit condition for this operating permit. These documents shall be implemented for the life of the SYU Project and shall be made available to APCD inspection staff upon request.

(a) *Fugitive Emissions Inspection and Maintenance Program for Las Flores Canyon Process Facilities* (approved 3/29/2002).

(b) *Vacuum Truck Plan* (approved 6/14/1993)

(c) *CEM (CGA) Plan* (approved 3/29/2002)

(d) *Emergency Episode Plan* (approved 3/29/2002)

(e) *AQMRO Monitoring Plan* (approved 6/22/1993)

(f) *Odor Monitoring Plan* (approved 11/20/2001)

(g) *Petroleum Storage Tank Degassing Plan* (approved 5/20/1999)

(h) *Rule 359 Flare Minimization Plan* (approved 9/8/2004)

(i) *Rule 343 Purging/Degassing Plan* (approved 5/20/1999)

(j) *Diesel IC Engine Particulate Matter Operation and Maintenance Plan* (approved 5/20/1999)

(k) *NSPS Subpart Kb Operating Plan* (approved 1/20/2005)

(l) *Carbon Canister Monitoring and Maintenance Plan* (approved 2/5/2001)

(m) *Boat Monitoring and Reporting Plan* (approved 6/2002)

(n) *Solvent Reclamation Plan* (approved 12/23/1999) [*Re: ATC 5651, PTO 5651]*

(o) *Sulfur Removal Efficiency Plan* (approved 9/8/2004)

C.37 **Documentation of Outer Continental Shelf ("OCS") Activities.** ExxonMobil shall provide sufficient information to the MMS and the APCD on project activities on the OCS to verify air emission calculations used for this permit. Such information shall consist of the following: a) Fugitive hydrocarbon information; b) flaring information; c) for all fuel burning equipment 50 bhp or greater ExxonMobil will provide the total hours of operation for each piece of equipment and amount of fuel used by equipment type. To avoid duplication, ExxonMobil may reference information already provided in Compliance Verification Reports required by ExxonMobil's OCS operating permits for Platforms Hondo, Harmony and Heritage. ExxonMobil shall also provide monthly summaries of the composition of fuel used at each platform. Upon written request by the APCD, ExxonMobil shall make all logs available for review.

(a) Information on construction of OCS project components shall consist of the following:

(i) Description of all fuel consuming equipment and vessels 500 hp or greater.
(ii) Engine description including make, model, size, and output ratings.
(iii) Monthly fuel use.
(iv) ExxonMobil shall provide monthly summaries of all the above data within sixty (60) days after the end of 2nd and 4th quarters. [*Re: ATC 5651, PTO 5651*]

C.38 **Additional Mitigation Measures.** If, at any time, the APCD determines that the mitigation measures, imposed by these Permit Conditions, are inadequate to effectively mitigate significant environmental impacts caused by the project, then additional reasonable and feasible conditions shall be imposed to further mitigate these impacts. ExxonMobil agrees that it will comply with such reasonable and feasible conditions, subject to review thereof under all applicable provisions of law. The APCD may conduct a comprehensive review of the project conditions three years after permit issuance and at appropriate intervals thereafter. Upon appeal by ExxonMobil to the Hearing Board, the Hearing Board shall determine whether any new conditions imposed by the APCD are reasonable and feasible, considering the economic burdens imposed and environmental benefits to be derived. In no event shall this condition be construed so as to preclude ExxonMobil from vesting rights under this permit as provided under California law.

(a) For purposes of this Condition, "mitigation" and "feasible" shall have the same meanings as defined in CEQA Guidelines, and "significant environmental impact" as applied to air quality means the project's emissions cause a violation of any applicable air quality standards or result in a nuisance as defined by the California Health and Safety Code Section 41700. [*Re: ATC 5651, PTO 5651*]

C.39 **Ambient Monitoring Requirements.** ExxonMobil shall implement the requirements of Section 4.14 (Operational and Regional Monitoring) and Table 4.8 (Requirements For Operational and Regional Monitoring) for the life of the Santa Ynez Project. These monitoring stations shall be fully operational at all times. ExxonMobil shall implement the most recent APCD-approved

AQMRO Monitoring Plan. ExxonMobil shall continue to operate the Nojoqui station in accordance with the approved monitoring plan that was prepared by GTC in September 1992. All monitoring plans and quality assurance manuals shall be in accordance with the APCD Monitoring Protocol (October 1990 and all updates). Data from the monitoring stations shall be transmitted in real-time to the APCD's office. [*Re: ATC 5651, PTO 5651*]

C.40 **Odor Monitoring Plan.** ExxonMobil shall implement the requirements of Section 4.15 (*Odor Monitoring*) and Table 4.9 (*Requirements For Odor Monitoring*) for the life of the Santa Ynez Project. These monitoring stations shall be fully operational at all times. ExxonMobil shall implement the APCD-approved *Odor Monitoring Plan*. All monitoring plans and quality assurance manuals shall be in accordance with the APCD Monitoring Protocol (October 1990 and all updates). Data from the monitoring stations shall be transmitted in real-time to the APCD's office. [*Re: ATC 5651, PTO 5651*]

C.41 **Ambient Monitoring and Odor Monitoring Stations Operation Fee.** By permit conditions C.39 and C.40, ExxonMobil shall operate and provide APCD the data from LFC-1, LFC-Odor, and Nojoqui monitoring stations for the life of ExxonMobil's Santa Ynez Project. ExxonMobil has requested that the APCD operate ExxonMobil's LFC-1, Nojoqui, and LFC-Odor monitoring sites and assess an annual fee for this service.

(a) Pursuant to Rule 210 III.A, ExxonMobil shall pay fees specified in Table 9.3. The APCD shall use these fees to operate the stations, purchase consumables, spare parts and fixed assets, and pay for utilities (except power as noted below), communications, maintenance of equipment, and vehicle operation per assumptions in the APCD's March 27, 1998 letter (*Fixed Fee Proposal for Monitoring and DAS Costs*), and as modified by APCD's March 30, 1999 memorandum (*APCD costs for Operating ExxonMobil's LFC1 and Odor Monitoring Station and the Nojoqui Monitoring Agreement (12/15/05) Article 2, Section 2.01*). Fees shall be due and payable pursuant to governing provisions of Rule 210, including CPI adjustments. ExxonMobil shall be assessed an annual fee, based on the APCD's fiscal year, collected semi-annually. The APCD will operate the stations according to standard APCD, CARB and EPA protocols. In the event that the operation of the station shows that the assumptions used to establish the fee were inaccurate or incomplete, or if costs associated with the fee substantially increase or decrease, the APCD may revisit and adjust the fee based on documentation of the actual cost of services. Adjusted fees will be implemented by transmitting a revised Table 9.3, which will become an enforceable part of the permit in the subsequent fiscal year.

(i) All fees shall be due and payable pursuant to the governing provisions of Rule 210, including CPI adjustments.

(ii) The fees in this table are based on the APCD's March 27, 1998 letter (*Fixed Fee Proposal for Monitoring and DAS Costs*), and APCD's March 30, 1999 memorandum (*APCD costs for Operating ExxonMobil's LFC1 and Odor Monitoring Stations and the Nojoqui Monitoring Agreement (12/15/05) Article 2, Section 2.01*) and may be updated pursuant to the requirements of this permit.

Table 9.3 Fees for Monitoring and Operation[(i), (ii)]

FEE DESCRIPTION	Annual Fee
LFC-1 Operation	$81,313.40
LFC-Odor Operation	$65,773.04
Nojoqui Operations	$84,975.09
Total	$232,061

(b) The fee will cover costs for station operation, maintenance of equipment, equipment audits, data collection, review and submittal of data to EPA, and all future upgrades to equipment (including to the fencing or the enclosure). ExxonMobil will continue to have the permit requirement to operate the monitoring sites for the life of the Santa Ynez Project, however, ExxonMobil will not be held responsible for the quality or quantity of the data collected at monitoring stations operated by the APCD.

(c) ExxonMobil has entered into a Lease Agreement with the APCD which provides for, but is not limited to, access, utilities, (power, telephone and rubbish collection), terms for termination, indemnity and ownership of improvements. This Lease Agreement (dated May 20, 1999) is incorporated herein as an enforceable part of this permit.

(d) If the APCD ceases to operate ExxonMobil's LFC-1, LFC-Odor, or the Nojoqui monitoring sites for any reason, then ExxonMobil shall be responsible for operating these three sites. [*Re: ATC/PTO 5651-01*]

C.42 **Ambient and Odor Monitoring Station Data Review and Audit Fee.** By permit condition C.39 and C.40, ExxonMobil shall operate ambient and odor monitoring stations and submit data to the APCD for quality assurance review and shall have the stations audited quarterly by the APCD, or its contractor. In addition, ExxonMobil shall reimburse the APCD for the cost of this service. Effective July 1, 1999, ExxonMobil shall be assessed an annual fee, based on the APCD's fiscal year, collected semi-annually.

(a) Pursuant to Rule 210 III.A., ExxonMobil shall pay fees specified in Table 9.4. The APCD will use this fee to pay staff costs to review and quality assure the monitoring data collected by ExxonMobil and the contractor or staff costs to audit the monitoring equipment. This fee shall not cover any APCD time necessary to issue or respond to any Notice of Violation, which will be billed on a reimbursable basis. Fees shall be due and payable pursuant to governing provisions of Rule 210, including CPI adjustments. In the event that ExxonMobil consistently requires services in excess of those assumed in the APCD's March 27, 1998 letter (*Fixed Fee Proposal for Monitoring and DAS Costs*), the Control Officer may move ExxonMobil to a reimbursable method of payment, subject to provisions of Rule 210. The APCD will operate the stations according to standard APCD, CARB and EPA protocols. In the event that the actual data review and audit process shows that the assumptions used to establish the fee were inaccurate or incomplete, or if costs associated with the fee substantially increase or decrease, the APCD may revisit and adjust the fee based on documentation of the actual cost of services. Adjusted fees will be implemented by transmitting a revised Table 9.3, which will become an enforceable part of the permit.

(i) All fees shall be due and payable pursuant to the governing provisions of Rule 210, including CPI adjustments.

(ii) The fees in this table are based on the APCD's March 27, 1998 letter (*Fixed Fee Proposal for Monitoring and DAS Costs*) and may be updated pursuant to the requirements of this permit.

Table 9.4 Fees for Monitoring Data Review and Audit[(i), (ii)]

FEE DESCRIPTION	FEE
Data review and audit activities associated with data submitted from any monitoring station in Table 4.5, 4.6, or 4.7	$23.569 annually
Data review and audit activities associated with data submitted from any odor or meteorological station in Table 4.8 or Table 4.9	$11,784 annually

(b) The fees prescribed in this condition shall expire if and when the APCD Board of Directors adopts an Ambient Monitoring Station Data Review and Audit Fee and such fee becomes effective.

(c) Notwithstanding the above, the data review and audit fee shall not apply as long as the APCD operates the three monitoring stations consistent with the requirements of Permit Condition C.42. *[Re: ATC/PTO 5651-01*]

C.43 **Visible Emissions**

(a) Planned and Unplanned Flaring (Thermal Oxidizer): No visible emissions shall occur from any planned or unplanned flaring events. ExxonMobil shall perform a visible emissions observation for a one-minute period once per quarter during a planned intermittent flaring event occurring during daylight hours. If a daylight planned-intermittent flaring event does not occur during the calendar quarter, no monitoring is required. For each unplanned flaring event during daylight hours that is greater than six-minutes in duration, a visible emissions observation for a one-minute period shall be performed. The observation shall begin no later than six-minutes after the time the unplanned flaring event begins, and if the total flare event is less than 7-minutes, the observation may be less than the full one-minute. The start-time and end-time of each visible emissions inspection shall be recorded in a log, along with a notation identifying whether visible emissions were detected. ExxonMobil shall obtain APCD approval of the Visible Emissions Log required by this condition. All records shall be maintained consistent with the recordkeeping condition of this permit.

(b) Waste Gas Incinerator: No visible emissions shall occur from the Waste Gas Incinerator. Once per calendar quarter, ExxonMobil shall perform a visible emissions inspection for a one-minute period from the Waste Gas Incinerator. The start-time and end-time of each visible emissions inspection shall be recorded in a log, along with a notation identifying whether visible emissions were detected. ExxonMobil shall obtain APCD approval of the Visible Emissions Log required by this condition. All records shall be maintained consistent with the recordkeeping condition of this permit.

(c) Diesel Fueled IC Engines: No visible emissions shall occur from any diesel fueled engines. Once per calendar quarter, ExxonMobil shall perform a visible emissions inspection for a one-minute period on each diesel engine when operating, except for

diesel engine powered vehicles on-site and diesel engines that qualify as non-road engines per the definition in 40 CFR 89.2. For the firewater pump, ExxonMobil shall perform a one-minute visible emission inspection each time the firewater pump is operated longer then 15-minutes during any testing or emergency drills (otherwise no inspection is required). The start-time and end-time of each visible emissions inspection shall be recorded in a log, along with a notation identifying whether visible emissions were detected. ExxonMobil shall obtain APCD approval of the Visible Emissions Log required by this condition. All records shall be maintained consistent with the recordkeeping condition of this permit.

9.D APCD-Only Conditions

The following section lists permit conditions that are not enforceable by the USEPA or the public. However, these conditions are enforceable by the APCD and the State of California. These conditions are issued pursuant to APCD Rule 206 (*Conditional Approval of Authority to Construct or Permit to Operate*), which states that the Control Officer may issue an operating permit subject to specified conditions. Permit conditions have been determined as being necessary for this permit to ensure that operation of the facility complies with all applicable local and state air quality rules, regulations and laws. Failure to comply with any condition specified pursuant to the provisions of Rule 206 shall be a violation of that rule, this permit, as well as any applicable section of the California Health & Safety Code.

D.1 **Diesel Internal Combustion Engines**. The following equipment is included in this emissions category:

Device Type	ExxonMobil ID	APCD DeviceNo
Diesel Internal Combustion Engines		
Firewater Pump A	PBE-1396 A	1085
Firewater Pump B	PBE-1396 B	1086
Floodwater Pump	LFC-07	8122

(a) Emission Limitations. The mass emissions from the floodwater pump (DeviceNo 8122) shall not exceed the values listed in Table 5.3 and 5.4. Compliance shall be based on the operational, monitoring, recordkeeping and reporting conditions of this permit

(b) Operational Restrictions**.** The equipment permitted herein is subject to the following operational restrictions listed below. Emergency use operations, as defined in Section (d)(25) of the ATCM[13], have no operational hours limitations.

(i) *Impending Rotating Outage Use*: The stationary emergency standby diesel-fueled CI engines subject to this permit may be operated in response to the notification of an impending rotating outage if all the conditions cited in Section (e)(2)(A)(2) or Section (e)(2)(B)(1) of the ATCM are met, as applicable.

(ii) *Fuel and Fuel Additive Requirements*: The permittee may only add fuel and/or fuel additives to the engines or any fuel tank directly attached to the engines that comply with Section (e)(1)(A) or Section (e)(1)(B) of the ATCM, as applicable. This provision may be delayed pursuant to the provisions of Section (c)(19) of the ATCM.

(iii) *Temporary Engine Replacements - DICE ATCM* - Any reciprocating internal combustion engine subject to this permit and the stationary diesel ATCM may be replaced temporarily only if the requirements (1 – 7) listed herein are satisfied.

[13] As used in the permit, "ATCM" means Section 93115, Title 17, California Code of Regulations. Airborne Toxic Control Measure for Stationary Compression Ignition (CI) Engines

(1) The permitted engine is in need of routine repair or maintenance.

(2) The permitted engine that is undergoing routine repair or maintenance is returned to its original service within 180 days of installation of the temporary engine.

(3) The temporary replacement engine has the same or lower manufacturer rated horsepower and same or lower potential to emit of each pollutant as the permitted engine that is being temporarily replaced. At the written request of the permittee, the APCD may approve a replacement engine with a larger rated horsepower than the permitted engine if the proposed temporary engine has manufacturer guaranteed emissions (for a brand new engine) or source test data (for a previously used engine) less than or equal to the permitted engine.

(4) The temporary replacement engine shall comply with all rules and permit requirements that apply to the permitted engine that is undergoing routine repair or maintenance.

(5) For each permitted engine to be temporarily replaced, the permittee shall submit a completed *Temporary IC Engine Replacement Notification* form (Form ENF-94) within 14 days of the temporary engine being installed. This form shall be sent electronically to: *temp-engine@sbcapcd.org*.

(6) Within 14 days upon return of the original permitted engine to service, the permittee shall submit a completed *Temporary IC Engine Replacement Report* form (Form ENF-95). This form shall be sent electronically to: *temp-engine@sbcapcd.org*.

(7) Any engine in temporary replacement service shall be immediately shut down if the APCD determines that the requirements of this condition have not been met. This condition does not apply to engines that have experienced a cracked block (unless under manufacturer's warranty), to engines for which replacement parts are no longer available, or new engine replacements {including "reconstructed" engines as defined in Section (d)(44) of the ATCM}. Such engines are subject to the provisions of New Source Review and the new engine requirements of the ATCM.

(iv) *Permanent Engine Replacements* - Any E/S engine, firewater pump engine or engine used for an essential public service that breaks down and can not be repaired may install a new replacement engine without first obtaining an ATC permit only if the requirements (1 – 6) listed herein are satisfied.

(1) The permitted stationary diesel IC engine is an E/S engine, a firewater pump engine or an engine used for an essential public service (as defined by the APCD).

(2) The engine breaks down, cannot be repaired and needs to be replaced by a new engine.

(3) The facility provides "good cause" (in writing) for the immediate need to install a permanent replacement engine prior to the time period before an ATC permit can be obtained for a new engine. The new engine must comply with the

requirements of the ATCM for new engines. If a new engine is not immediately available, a temporary engine may be used while the new replacement engine is being procured. During this time period, the temporary replacement engine must meet the same guidelines and procedures as defined in the permit condition above (*Temporary Engine Replacements - DICE ATCM*).

(4) An Authority to Construct application for the new permanent engine is submitted to the APCD within 15 days of the existing engine being replaced and the APCD permit for the new engine is obtained no later that 180 days from the date of engine replacement (these timelines include the use of a temporary engine).

(5) For each permitted engine to be permanently replaced pursuant to the condition, the permittee shall submit a completed *Permanent IC Engine Replacement Notification* form (Form ENF-96) within 14 days of either the permanent or temporary engine being installed. This form shall be sent electronically to: *temp-engine@sbcapcd.org*.

(6) Any engine installed (either temporally or permanently) pursuant to this permit condition shall be immediately shut down if the APCD determines that the requirements of this condition have not been met.

(v) *Notification of Non-Compliance* - Owners or operators who have determined that they are operating their stationary diesel-fueled engine(s) in violation of the requirements specified in Sections (e)(1) of the ATCM shall notify the APCD immediately upon detection of the violation and shall be subject to APCD enforcement action.

(vi) *Notification of Loss of Exemption* - Owners or operators of in-use stationary diesel-fueled CI engines, who are subject to an exemption specified in Section (c) from all or part of the requirements of Section (e)(2), shall notify the APCD immediately after they become aware that the exemption no longer applies and pursuant to Section (e)(4)(F)(1) of the ATCM shall demonstrate compliance within 180 days after notifying the APCD.

(vii) *Enrollment in a DRP/ISC - January 1, 2005* - Any stationary diesel IC engine rated over 50 bhp that enrolls for the first time in a Demand Response Program/Interruptible Service Contract (as defined in the ATCM) on or after January 1, 2005, shall first obtain an APCD Authority to Construct permit to ensure compliance with the emission control requirements and hour limitations governing ISC engines.

(c) Monitoring**.** The equipment permitted herein is subject to the following monitoring requirements:

(i) *Non-Resettable Hour Meter*: Each stationary emergency standby diesel-fueled CI engine(s) subject to this permit shall have installed a non-resettable hour meter with a minimum display capability of 9,999 hours, unless the APCD has determined (in writing) that a non-resettable hour meter with a different minimum display capability is appropriate in consideration of the historical use of the engine and the owner or operator's compliance history

(d) Recordkeeping. The permittee shall record and maintain the information listed below. Log entries shall be retained for a minimum of 36 months from the date of entry. Log entries made within 24 months of the most recent entry shall be retained on-site, either at a central location or at the engine's location, and made immediately available to the APCD staff upon request. Log entries made from 25 to 36 months from most recent entry shall be made available to APCD staff within 5 working days from request. Use of APCD Form ENF-92 (*Diesel-Fired Emergency Standby Engine Recordkeeping Form*) can be used for this requirement.

(i) emergency use hours of operation;

(ii) maintenance and testing hours of operation;

(iii) hours of operation for emission testing to show compliance with Section (e)(2)(A)(3) or Section (e)(2)(B)(3) of the ATCM {if specifically allowed for under this permit}

(iv) hours of operation for all uses other than those specified in items (a) – (c) above along with a description of what those hours were for.

(v) The owner or operator shall document fuel use through the retention of fuel purchase records that account for all fuel used in the engine and all fuel purchased for use in the engine, and, at a minimum, contain the following information for each individual fuel purchase transaction:

(1) identification of the fuel purchased as either CARB Diesel, or an alternative diesel fuel that meets the requirements of the Verification Procedure, or an alternative fuel, or CARB Diesel fuel used with additives that meet the requirements of the Verification Procedure, or any combination of the above;
(2) amount of fuel purchased;
(3) date when the fuel was purchased;
(4) signature of owner or operator or representative of owner or operator who received the fuel;
(5) signature of fuel provider indicating fuel was delivered.

(vi) hours of operation to comply with the requirements of the NFPA for healthcare facilities or firewater pumps (for DeviceNo 1085 and 1086)

(e) Reporting**.** By March 1 of each year, a written report documenting compliance with the terms and conditions of this permit and the ATCM for the previous calendar year shall be provided by the permittee to the APCD (Attn: *Annual Report Coordinator*). All logs and other basic source data not included in the report shall be made available to the APCD upon request. The report shall include the information required in the Recordkeeping Condition above and may be submitted in the CVR required per condition C.10 of this permit.

AIR POLLUTION CONTROL OFFICER

_____

_____

Date

Attachments:

1 - CEMS Requirements
2 - Emission Calculation Documentation
3 - Tanks, Sumps and Separators List
4 - Source NEI
5 - List of Insignificant Emission Units
6 - NSPS Compliance Report
7 – APCD Response to Comments
8 – Phase III Water Treatment Plant

Notes:

Reevaluation Due Date: May 2012
Semi-Annual reports are due by March 1st and September 1st of each year

10.0 Attachments

10.1. CEMS Requirements

Table 10.1 Emission and Process Parameter Monitoring and Reporting Requirements for the CPP

Location Number	Test Location	Parameter Monitored	Monitoring Method
1	Exhaust Stack	NO_x	NO_x Analyzer [2, 3, 5, 6]
		O_2	O_2 Analyzer [2, 3, 6]
		CO	CO Analyzer [2, 3, 5, 6]
		Temperature	Thermocouple [2, 3, 5]
		Flow Rate	Annubar [2, 3, 5, 6] (or equivalent)
2	SCR Inlet	NO_x	NO_x Analyzer [2, 3, 6]
		Temperature	Thermocouple [2, 3, 5]
3	Bypass Stack	Flow Rate (while operating)	Calculated [2, 3, 5]
		Damper Position	Monitor Position [2, 3]
4	Turbine Fuel Feed	Flow Rate	Process Flow Meter [2, 3, 6]
5	Turbine Steam Injection	Flow Rate	Process Flow Meter [2, 3, 6]
6	HRSG Fuel Feed	Flow Rate	Process Flow Meter [2, 3, 6]
7	Cogeneration Plant Turbines	Electrical Output [4]	Plant Meters [2, 3]
8	Waste Heat Recovery Unit	Steam Production	Process Flow Meter [2, 3, 6]
9	Ammonia Injection Point	NH_3 Feed Rate	Process Flow Meter [2, 3, 6]
10	Cogeneration Plant	Mode	Process Monitors [2, 3, 5]

Notes:

1 Parameters in addition to those listed must be monitored continuously if deemed necessary by the APCD.
2 Parameter raw data must be permanently recorded using: (a) strip chart or circular chart and/or (b) computer or data/logger.
3 Parameters must be monitored continuously and reported to the APCD on a semi-annual basis.
4 Monitor and record the amount of electricity generated, the amount consumed by the onshore facility, the amount sold to the grid and the amount purchased from the grid. Reported by month and year.
5 Parameter monitoring must be telemetered to the APCD
6 Each emissions monitoring instrument must be performance certified annually (or more often if this is deemed necessary by the APCD) in accordance with 40 CFR 60 Appendix B and 40 CFR 50 Appendix E, or equivalent method approved by the APCD. Flow meter shall be calibrated per the CEMs Plan.
7 Monitoring and reporting frequency per APCD CEMS Protocol and ExxonMobil's APCD-approved CEMS Plan.
8 Telemetry may be required in the future.

Table 10.2 Emission and Process Parameter Monitoring and Reporting Requirements for the Stripping Gas Treating Plant[1, 7, 8]

Location Number	Test Location	Parameter Monitored	Monitoring Method
1	Incinerator Exhaust	NO_x	NO_x Analyzer [2, 3, 5, 6]
		SO_2	SO_x Analyzer [2, 3, 5, 6]
		O_2	O_2 Analyzer [2, 3, 6]
		Temperature	Thermocouple [2, 3, 5]
		Flow Rate	Annubar [2, 3, 5, 6] (or equivalent)
2	Inlet Gas - Platform gas	Flow Rate	Process Flow Meter [2, 3, 6]
	- Stripping Gas	Flow Rate	Process Flow Meter [2, 3, 6]
3	Assist Gas to Incinerator	Flow Rate	Process Flow Meter [2, 3,, 6]
4	Sweet Gas from Amine Unit	H_2S	H_2S Analyzer [2, 3, 6]
5	Sulfur Production	Production Rate	Tank Gauging
6	Tail Gas Feed	Flow Rate	Process Flow Meter [2, 3, 6]
		H_2S	H_2S Analyzer [2, 3, 6]
7	Acid Gas Feed	Flow Rate	Process Flow Meter [2, 3, 6]
8	Incinerator Inlet	Flow Rate from TGCU	Process Flow Meter [2, 3, 6]
		Flow Rate from Merox	Process Flow Meter [2, 3, 6]
		H_2S from TGCU	H_2S Analyzer [6]
		H_2S from Merox	Absorbent tube [4]

Notes:

1 Parameters in addition to those listed must be monitored continuously if deemed necessary by the APCD.

2 Parameter raw data must be permanently recorded using: (a) strip chart or circular chart and/or (b) computer or data/logger.

3 Parameters must be monitored continuously and reported to the APCD on a semi-annual basis.

4 Reading a minimum of once every week at evenly spaced intervals when in operation.

5 Parameter monitoring must be telemetered to the APCD

6 Each emissions monitoring instrument must be performance certified annually (or more often if this is deemed necessary by the APCD) in accordance with 40 CFR 60 Appendix B and 40 CFR 50 Appendix E, or equivalent method approved by the APCD. Flow meter shall be calibrated per the CEMs Plan.

7 Monitoring and reporting frequency per APCD CEMS Protocol and ExxonMobil's APCD-approved CEMS Plan.

8 Telemetry may be required in the future.

Table 10.3 Emission and Process Parameter Monitoring and Reporting Requirements for the Oil Treating Plant, Thermal Oxidizer, and Transportation Terminal[1, 6]

Location Number	Test Location	Parameter Monitored	Monitoring Method
1	Dry Oil Produced	Volume	Process Flow Meter [2, 3, 5]
2	Waste Gas to Thermal Oxidizer	Flow Rate	Process Flow Meter [2, 3, 5]
		Composition	Sample [4]
3	Pilot, Purge and Acid Gas Enrichment Fuel Gas to Thermal Oxidizer	Flow Rate	Process Flow Meter [3, 5]
4	Thermal Oxidizer	Combustion Temperature	Thermocouple or Optical Pyrometer [2, 3]
-	Oil Storage Tanks and Rerun Tanks	Tank Pressure Safety Valve Actuations	Pressure Transmitter [2, 3] PSV Seat Position Transmitter [2, 3]

Notes:

1 Parameters in addition to those listed must be monitored continuously if deemed necessary by the APCD.

2 Parameter raw data must be permanently recorded using: (a) strip chart or circular chart and/or (b) computer or data/logger.

3 Parameters must be monitored continuously and reported to the APCD on a semi-annual basis.

4 Initial sample taken at 3 minutes, 27 minutes and 53 minutes into flaring event with additional samples taken at successive continuous one hour intervals. Composition analysis will include determination of the following: heating value, ultimate analysis, and sulfur content.

5 Each emissions monitoring instrument must be performance certified annually (or more often if this is deemed necessary by the APCD) in accordance with 40 CFR 60 Appendix B and 40 CFR 50 Appendix E, or equivalent method approved by the APCD. Flow meter shall be calibrated per the CEMs Plan.

6 Telemetry may be required in the future.

Table 10.4 Specific CEMs Parameters to be Telemetered to the Data Acquisition System (DAS)

Plant	Location	Parameter Monitored	Items Telemetered
CPP	Exhaust Stack	NO_x [1]	lb/hr; ppmvd at 3% oxygen
	Exhaust Stack	CO	lb/hr; ppmvd at 3% oxygen
	Exhaust Stack	Temperature	°F
	Exhaust Stack	Flow Rate	million scfh
	SCR Inlet	Temperature	°F
	n/a	Mode	Operating Mode (GT Only, HRSG Only, Tandem, Startup/Shutdown)
SGTP	WGI Exhaust Stack	NO_x [1]	lb/hr; ppmvd at 2% oxygen
	WGI Exhaust Stack	SO_x [2]	lb/hr; ppmvd at 2% oxygen
	WGI Exhaust Stack	Temperature	°F
	WGI Exhaust Stack	Flow Rate	thousand scfh

Notes:

1 NO_x as NO_2
2 SO_x as SO_2

10.2. Emission Calculation Documentation

This attachment contains emission calculation spreadsheets and other supporting calculations used for the emission tables in Section 5 and permit conditions in Section 9. Refer to Section 4 for the general equations, assumptions and emission factor basis used.

Table 10.5 Variables Used in Emissions Calculations

Variable	Value	Units	Reference
HHV fuel gas	1300	Btu/scf	Exxon 1994 PTO application
HHV propane	2524	Btu/scf	American Gas Association
HHV Diesel #2	138,200	Btu/gal	Bureau of Standards Pub. 97 "*Thermal Properties of Petroleum Prooducts*"
LCF	1.06	n/a	Chemical Engineer's Handbook, Figure 9-3, *Heat of Combustion of Petroleum Fuels*, 5th Ed
Diesel ICE PM10 Ratio	1.0	n/a	AP-42 Table 3.3-1, footnote (b), 10/96
Diesel ICE ROC Ratio	0.8378	n/a	APCD VOC/ROC Profile sheet (July 13, 1998)
Diesel Density	7.043	lb/gal	Bureau of Standards Pub. 97 "*Thermal Properties of Petroleum Prooducts*"
Process Heater ROC Ratio	0.50	n/a	APCD VOC/ROC Profile sheet (July 13, 1998)
Process Heater PH PM10 Ratio	1.0	n/a	AP-42 Table 1.4-2, footnote (c), 3/98
Flare ROC Ratio	0.86	n/a	PTO 9102
Flare PM Ratio	1.0	n/a	PTO 9102

Table 10.6 CPP BACT Concentration Calculations

$$\text{ppmvd at 3\% O2} = \frac{EF * v * 10^6}{MW * \text{f-factor}} \Longrightarrow \frac{\text{dscf of pollutant}}{\text{million dscf exhaust}} \quad \frac{(\text{lb/MMBtu}) * (\text{dscf/lb-mole}) * 10^6}{(\text{lb/lb-mole}) * (\text{dscf/MMBtu}) * MM}$$

Variable	Value	Units	Reference
MW	46	lb/lb-mole for NOx	
	28	lb/lb-mole for CO	
v	379	dscf/lb-mole	
EF		Btu/gal	BACT emission factors from Table 4.2
f-factor	8,740	dscf/MMBtu	(at 0% O_2, 1 atm, 68°F) Re: 40 CFR Part 60, NSPS D
	10,050	dscf/MMBtu	(at 3% O_2, 1 atm, 60°F) Re: corrected to SBCAPCD standard conditions and 3
NOx (as NO2)	820 * EF	Btu/gal	
CO	1,347 * EF	Btu/gal	

	NOx		CO	
	BACT EF lb/MMBtu	ppmvd at 3% O_2	BACT EF lb/MMBtu	ppmvd at 3% O_2
CPP Normal Operations Mode - Gas Turbine Only	0.0300	24.6	0.0216	17.7
CPP Normal Operations Mode - Gas Turbine/HRSG in Tandem	0.0272	22.3	0.0260	21.3
HRSG Only Mode	0.0300	24.6	0.2970	243.5

Table 10.7 Cogeneration Power Plant Emission Factor/BACT Basis

Tandem Operations	Emission Factor/BACT Basis
NOx	Composite of original emission factors from ATC 5651 (Case "A", page 10.1-10) based on weighting of permitted heat input ratings. (GT = 463 MMBtu/hr, HRSG = 142 MMBtu/hr).
ROC	Composite of original emission factors from ATC 5651 (Case "A", page 10.1-10) based on weighting of permitted heat input ratings
CO	Composite of original emission factors from ATC 5651 (Case "A", page 10.1-10) based on weighting of actual heat input ratings (GT = 440 MMBtu/hr, HRSG = 80 MMBtu/hr). EF applies at all loads between 75-100% load, with additional 17 lb/hr limit for all loads.
SOx	Mass balance
PM	Value (less than either composites and the original permit) selected by Exxon to minimize offset requirements.
PM10	Value (less than either composites and the original permit) selected by Exxon to minimize offset requirements.

Gas Turbine Only Operations	Emission Factor/BACT Basis
NOx	Original emission factor from ATC 5651 (Case "A", page 10.1-10)
ROC	Original emission factor from ATC 5651 (Case "A", page 10.1-10)
CO	Original emission factor from ATC 5651 (Case "A", page 10.1-10) EF applies at all loads between 75-100% load, with additional 17 lb/hr limit for all loads to address higher CO at low load conditions.
SOx	Mass balance
PM	Revised emission factor from ATC 5651-05
PM10	Revised emission factor from ATC 5651-05

HRSG Only Operations	Emission Factor/BACT Basis
NOx	Original emission factor from ATC 5651 (Case "C", page 10.1-10)
ROC	Value (less than either composites and the original permit) selected by Exxon to minimize offset requirements.
CO	Rule 342 with additional 17 lb/hr limit for all loads.
SOx	Mass balance
PM	Original emission factor from ATC 5651 (Case "C", page 10.1-10)
PM10	Original emission factor from ATC 5651 (Case "C", page 10.1-10)

Table 10.8 Combustion Thermal Oxidizer Operating Description

Plant	Type of Flaring	Description	DID #	Process #	APCD DeviceNo	Gas Flow	Event Duration	Sulfur Content	HHV	Expected Frequency Hours per Period			
						(kscfh)	(min)	(ppmv S)	(Btu/scf)	Hour	Day	Quarter	Year
OTP	Purge and Pilot	Planned - Purge & Pilot	0004	0001	102738	4.00	60.00	24.00	1,200.00	1.00	24.00	2,190.00	8,760.00
OTP	Planned - Continuous	Planned - Continuous LP	0004	0001	102739	1.41	60.00	500.00	1,200.00	1.00	24.00	2,190.00	8,760.00
OTP	Planned - Continuous	Planned - Continuous AG	0004	0001	102740	0.25	60.00	239.00	1,153.00	1.00	24.00	2,190.00	8,760.00
													Events per Period
SGTP	Purging for Maintenance	Planned - Other	0004	0003	102741	25.00	1,440.00	24.00	1,228.00	1.00	1.00	1.00	4.00
SGTP	Sulfur Plant Catalyst Changeout	Planned - Other	0004	0003	102741	0.00	2,880.00	24.00	1,228.00	1.00	1.00	1.00	4.00
OTP	Condensate Stab. Maint.	Planned - Other	0004	0003	102741	158.00	30.00	11,000.00	2,417.00	1.00	1.00	1.00	1.00
OTP	Crude Stab. Maint.	Planned - Other	0004	0003	102741	42.00	30.00	6,000.00	2,939.00	1.00	1.00	1.00	1.00
OTP, SGTP	Miscellaneous	Planned - Other	0004	0003	102741	46.00	80.00	950.00	1,200.00	1.00	2.00	180.00	365.00
					102741								
SGTP	Cogen Plant Shutdown	Unplanned - Other	0004	0005	102742	417.00	15.00	24.00	1,226.00	1.00	1.00	1.00	4.00
SGTP	Refridgeration Unit S/D	Unplanned - Other	0004	0005	102742	254.00	15.00	36,000.00	1,941.00	1.00	1.00	1.00	1.00
SGTP	Sulfur Plant S/D	Unplanned - Other	0004	0005	102742	19.00	60.00	679,000.00	442.00	1.00	1.00	1.00	4.00
SGTP	Off-Spec Fuel Gas Prodn.	Unplanned - Other	0004	0005	102742	163.00	60.00	33,000.00	1,054.00	1.00	1.00	1.00	2.00
SGTP	Vapor Rec. Compressor Failure	Unplanned - Other	0004	0005	102742	2.00	15.00	188,000.00	1,153.00	1.00	1.00	1.00	1.00
SGTP	Flash Sep. Control Valve Failure	Unplanned - Other	0004	0005	102742	400.00	15.00	32,000.00	980.00	1.00	1.00	1.00	1.00
OTP	SOV Compressor S/D	Unplanned - Other	0004	0004	102742	329.00	30.00	6,000.00	2,939.00	1.00	1.00	7.00	26.00
OTP	SOV Compressor Total S/D	Unplanned - Other	0004	0005	102742	1,000.00	5.00	6,000.00	2,939.00	1.00	1.00	1.00	1.00
OTP	SGTP S/D - High Pressure	Unplanned - Other	0004	0005	102742	458.00	15.00	11,000.00	2,417.00	1.00	1.00	1.00	1.00
OTP	SGTP S/D - Low Pressure	Unplanned - Other	0004	0005	102742	438.00	20.00	10,000.00	2,724.00	1.00	1.00	1.00	1.00
OTP	1 Vapor Rec. Compress. Failure	Unplanned - Other	0004	0005	102742	79.00	5.00	4,000.00	1,014.00	1.00	1.00	1.00	1.00
OTP	2 Vapor Rec. Compress. Failure	Unplanned - Other	0004	0005	102742	513.00	15.00	10,000.00	2,513.00	1.00	1.00	1.00	1.00
OTP, SGTP	Miscellaneous	Unplanned - Other	0004	0005	102742	300.00	60.00	239.00	1,200.00	1.00	1.00	2.00	6.00
					102742								

Table 10.9 Combustion Thermal Oxidizer Emission Factors

Plant	Type of Flaring	Description	DID #	Process #	APCD DeviceNo	Emission Factors (lb/MMBtu)						Rating	PM_{10}
						NO_x	ROC	CO	SO_x	PM	PM_{10}	MMBtu/hr	Ratio
OTP	Purge and Pilot	Planned - Purge & Pilot	0004	0001	102738	0.0980	0.0054	0.0824	0.0034	0.0075	0.0075	0.200	1.00
OTP	Planned - Continuous	Planned - Continuous LP	0004	0001	102739	0.0980	0.0054	0.0824	0.0704	0.0075	0.0075	0.071	1.00
OTP	Planned - Continuous	Planned - Continuous AG	0004	0001	102740	0.0980	0.0054	0.0824	0.0350	0.0075	0.0075	0.012	1.00
SGTP	Purging for Maintenance	Planned - Other	0004	0003	102741	0.0980	0.0054	0.0824	0.0033	0.0075	0.0075	1.279	1.00
SGTP	Sulfur Plant Catalyst Changeout	Planned - Other	0004	0003	102741	0.0980	0.0054	0.0824	0.0033	0.0075	0.0075	0.000	1.00
OTP	Condensate Stab. Maint.	Planned - Other	0004	0003	102741	0.0980	0.0054	0.0824	0.7691	0.0075	0.0075	15.912	1.00
OTP	Crude Stab. Maint.	Planned - Other	0004	0003	102741	0.0980	0.0054	0.0824	0.3450	0.0075	0.0075	5.143	1.00
OTP, SGTP	Miscellaneous	Planned - Other	0004	0003	102741	0.0980	0.0054	0.0824	0.1338	0.0075	0.0075	2.300	1.00
					102741								
SGTP	Cogen Plant Shutdown	Unplanned - Other	0004	0005	102742	0.0980	0.0054	0.0824	0.0033	0.0075	0.0075	21.302	1.00
SGTP	Refridgeration Unit S/D	Unplanned - Other	0004	0005	102742	0.0980	0.0054	0.0824	3.1345	0.0075	0.0075	20.542	1.00
SGTP	Sulfur Plant S/D	Unplanned - Other	0004	0005	102742	0.0980	0.0054	0.0824	259.6176	0.0075	0.0075	0.350	1.00
SGTP	Off-Spec Fuel Gas Prodn.	Unplanned - Other	0004	0005	102742	0.0980	0.0054	0.0824	5.2913	0.0075	0.0075	7.158	1.00
SGTP	Vapor Rec. Compressor Failure	Unplanned - Other	0004	0005	102742	0.0980	0.0054	0.0824	27.5559	0.0075	0.0075	0.096	1.00
SGTP	Flash Sep. Control Valve Failure	Unplanned - Other	0004	0005	102742	0.0980	0.0054	0.0824	5.5184	0.0075	0.0075	16.333	1.00
OTP	SOV Compressor S/D	Unplanned - Other	0004	0004	102742	0.0980	0.0054	0.0824	0.3450	0.0075	0.0075	40.289	1.00
OTP	SOV Compressor Total S/D	Unplanned - Other	0004	0005	102742	0.2745	0.0054	0.0824	0.3450	0.0075	0.0075	122.458	1.00
OTP	SGTP S/D - High Pressure	Unplanned - Other	0004	0005	102742	0.0980	0.0054	0.0824	0.7691	0.0075	0.0075	46.124	1.00
OTP	SGTP S/D - Low Pressure	Unplanned - Other	0004	0005	102742	0.0980	0.0054	0.0824	0.6204	0.0075	0.0075	49.713	1.00
OTP	1 Vapor Rec. Compress. Failure	Unplanned - Other	0004	0005	102742	0.0980	0.0054	0.0824	0.6667	0.0075	0.0075	3.338	1.00
OTP	2 Vapor Rec. Compress. Failure	Unplanned - Other	0004	0005	102742	0.0980	0.0054	0.0824	0.6725	0.0075	0.0075	53.715	1.00
OTP, SGTP	Miscellaneous	Unplanned - Other	0004	0005	102742	0.0980	0.0054	0.0824	0.0337	0.0075	0.0075	15.000	1.00
					102742								

Table 10.10 Combustion Thermal Oxidizer Short Term Emissions

Plant	Type of Flaring	Description	DID #	Process #	APCD DeviceNo.	NOx		ROC		CO		SOx		PM		PM10	
						lb/hr	lb/day	lb/hr	lb/day	lb/hr	lb/day	lb/hr	lb/day	lb/hr	lb/day	lb/hr	lb/day
OTP	Purge and Pilot	Planned - Purge & Pilot	0004	0001	102738	0.47	11.29	0.03	0.62	0.40	9.49	0.02	0.39	0.04	0.86	0.04	0.86
OTP	Planned - Continuous	Planned - Continuous LP	0004	0001	102739	0.17	3.99	0.01	0.22	0.14	3.36	0.12	2.87	0.01	0.31	0.01	0.31
OTP	Planned - Continuous	Planned - Continuous AG	0004	0001	102740	0.03	0.69	0.00	0.04	0.02	0.58	0.01	0.25	0.00	0.05	0.00	0.05
SGTP	Purging for Maintenance	Planned - Other	0004	0003	102741	3.01	72.21	0.17	3.98	2.53	3.98	0.10	2.43	0.23	5.53	0.23	5.53
SGTP	Sulfur Plant Catalyst Changeout	Planned - Other	0004	0003	102741	0.00	0.00	0.00	0.00	0.00	0.00	0.00	0.00	0.00	0.00	0.00	0.00
OTP	Condensate Stab. Maint.	Planned - Other	0004	0003	102741	18.71	18.71	1.03	1.03	15.73	1.03	146.86	146.86	1.43	1.43	1.43	1.43
OTP	Crude Stab. Maint.	Planned - Other	0004	0003	102741	6.05	6.05	0.33	0.33	5.09	0.33	21.29	21.29	0.46	0.46	0.46	0.46
OTP, SGTP	Miscellaneous	Planned - Other	0004	0003	102741	5.41	14.43	0.30	0.79	4.55	0.79	7.39	19.69	0.41	1.10	0.41	1.10
		Planned - Other Total			**102741**	**33.18**	**111.39**	**1.83**	**6.14**	**27.90**	**6.14**	**175.64**	**190.28**	**2.54**	**8.52**	**2.54**	**8.52**
SGTP	Cogen Plant Shutdown	Unplanned - Other	0004	0005	102742	12.53	12.53	0.69	0.69	10.53	0.69	0.42	0.42	0.96	0.96	0.96	0.96
SGTP	Refridgeration Unit S/D	Unplanned - Other	0004	0005	102742	12.08	12.08	0.67	0.67	10.16	0.67	386.33	386.33	0.92	0.92	0.92	0.92
SGTP	Sulfur Plant S/D	Unplanned - Other	0004	0005	102742	0.82	0.82	0.05	0.05	0.69	0.05	2,180.27	2,180.27	0.06	0.06	0.06	0.06
SGTP	Off-Spec Fuel Gas Prodn.	Unplanned - Other	0004	0005	102742	16.84	16.84	0.93	0.93	14.16	0.93	909.05	909.05	1.29	1.29	1.29	1.29
SGTP	Vapor Rec. Compressor Failure	Unplanned - Other	0004	0005	102742	0.06	0.06	0.00	0.00	0.05	0.00	15.89	15.89	0.00	0.00	0.00	0.00
SGTP	Flash Sep. Control Valve Failure	Unplanned - Other	0004	0005	102742	9.60	9.60	0.53	0.53	8.08	0.53	540.80	540.80	0.74	0.74	0.74	0.74
OTP	SOV Compressor S/D	Unplanned - Other	0004	0004	102742	47.38	47.38	2.61	2.61	39.84	2.61	166.80	166.80	3.63	3.63	3.63	3.63
OTP	SOV Compressor Total S/D	Unplanned - Other	0004	0005	102742	67.23	67.23	1.32	1.32	20.18	1.32	84.50	84.50	1.84	1.84	1.84	1.84
OTP	SGTP S/D - High Pressure	Unplanned - Other	0004	0005	102742	27.12	27.12	1.49	1.49	22.80	1.49	212.86	212.86	2.08	2.08	2.08	2.08
OTP	SGTP S/D - Low Pressure	Unplanned - Other	0004	0005	102742	38.97	38.97	2.15	2.15	32.77	2.15	246.74	246.74	2.98	2.98	2.98	2.98
OTP	1 Vapor Rec. Compress. Failure	Unplanned - Other	0004	0005	102742	0.65	0.65	0.04	0.04	0.55	0.04	4.45	4.45	0.05	0.05	0.05	0.05
OTP	2 Vapor Rec. Compress. Failure	Unplanned - Other	0004	0005	102742	31.58	31.58	1.74	1.74	26.56	1.74	216.74	216.74	2.42	2.42	2.42	2.42
OTP, SGTP	Miscellaneous	Unplanned - Other	0004	0005	102742	35.28	35.28	1.94	1.94	29.66	1.94	12.12	12.12	2.70	2.70	2.70	2.70
		Unplanned - Other Total			**102742**	**300.15**	**300.15**	**14.16**	**14.16**	**216.02**	**14.16**	**4,976.97**	**4,976.97**	**19.66**	**19.66**	**19.66**	**19.66**

Table 10.11 Combustion Thermal Oxidizer Long Term Emissions

Plant	Type of Flaring	Description	DID #	Process #	APCD DeviceNo.	NOx		ROC		CO		SOx		PM		PM10	
						tpq	tpy	tpq	tpy	tpq	tpy	tpq	tpy	tpq	tpy	tpq	tpy
OTP	Purge and Pilot	Planned - Purge & Pilot	0004	0001	102738	0.52	2.06	0.03	0.11	0.43	1.73	0.02	0.07	0.04	0.16	0.04	0.16
OTP	Planned - Continuous	Planned - Continuous LP	0004	0001	102739	0.18	0.73	0.01	0.04	0.15	0.61	0.13	0.52	0.01	0.06	0.01	0.06
OTP	Planned - Continuous	Planned - Continuous AG	0004	0001	102740	0.03	0.12	0.00	0.01	0.03	0.10	0.01	0.04	0.00	0.01	0.00	0.01
SGTP	Purging for Maintenance	Planned - Other	0004	0003	102741	0.04	0.14	0.00	0.01	0.03	0.12	0.00	0.00	0.00	0.01	0.00	0.01
SGTP	Sulfur Plant Catalyst Changeout	Planned - Other	0004	0003	102741	0.00	0.00	0.00	0.00	0.00	0.00	0.00	0.00	0.00	0.00	0.00	0.00
OTP	Condensate Stab. Maint.	Planned - Other	0004	0003	102741	0.01	0.01	0.00	0.00	0.01	0.01	0.07	0.07	0.00	0.00	0.00	0.00
OTP	Crude Stab. Maint.	Planned - Other	0004	0003	102741	0.00	0.00	0.00	0.00	0.00	0.00	0.01	0.01	0.00	0.00	0.00	0.00
OTP, SGTP	Miscellaneous	Planned - Other	0004	0003	102741	0.65	1.32	0.04	0.07	0.55	1.11	0.89	1.80	0.05	0.10	0.05	0.10
		Planned - Other Total			**102741**	**0.70**	**1.47**	**0.04**	**0.08**	**0.59**	**1.24**	**0.97**	**1.89**	**0.05**	**0.11**	**0.05**	**0.11**
SGTP	Cogen Plant Shutdown	Unplanned - Other	0004	0005	102742	0.01	0.03	0.00	0.00	0.01	0.02	0.00	0.00	0.00	0.00	0.00	0.00
SGTP	Refridgeration Unit S/D	Unplanned - Other	0004	0005	102742	0.01	0.01	0.00	0.00	0.01	0.01	0.19	0.19	0.00	0.00	0.00	0.00
SGTP	Sulfur Plant S/D	Unplanned - Other	0004	0005	102742	0.00	0.00	0.00	0.00	0.00	0.00	1.09	4.36	0.00	0.00	0.00	0.00
SGTP	Off-Spec Fuel Gas Prodn.	Unplanned - Other	0004	0005	102742	0.01	0.02	0.00	0.00	0.01	0.01	0.45	0.91	0.00	0.00	0.00	0.00
SGTP	Vapor Rec. Compressor Failure	Unplanned - Other	0004	0005	102742	0.00	0.00	0.00	0.00	0.00	0.00	0.01	0.01	0.00	0.00	0.00	0.00
SGTP	Flash Sep. Control Valve Failure	Unplanned - Other	0004	0005	102742	0.00	0.00	0.00	0.00	0.00	0.00	0.27	0.27	0.00	0.00	0.00	0.00
OTP	SOV Compressor S/D	Unplanned - Other	0004	0004	102742	0.17	0.62	0.01	0.03	0.14	0.52	0.58	2.17	0.01	0.05	0.01	0.05
OTP	SOV Compressor Total S/D	Unplanned - Other	0004	0005	102742	0.03	0.03	0.00	0.00	0.01	0.01	0.04	0.04	0.00	0.00	0.00	0.00
OTP	SGTP S/D - High Pressure	Unplanned - Other	0004	0005	102742	0.01	0.01	0.00	0.00	0.01	0.01	0.11	0.11	0.00	0.00	0.00	0.00
OTP	SGTP S/D - Low Pressure	Unplanned - Other	0004	0005	102742	0.02	0.02	0.00	0.00	0.02	0.02	0.12	0.12	0.00	0.00	0.00	0.00
OTP	1 Vapor Rec. Compress. Failure	Unplanned - Other	0004	0005	102742	0.00	0.00	0.00	0.00	0.00	0.00	0.00	0.00	0.00	0.00	0.00	0.00
OTP	2 Vapor Rec. Compress. Failure	Unplanned - Other	0004	0005	102742	0.02	0.02	0.00	0.00	0.01	0.01	0.11	0.11	0.00	0.00	0.00	0.00
OTP, SGTP	Miscellaneous	Unplanned - Other	0004	0005	102742	0.04	0.11	0.00	0.01	0.03	0.09	0.01	0.04	0.00	0.01	0.00	0.01
		Unplanned - Other Total			**102742**	**0.31**	**0.86**	**0.02**	**0.05**	**0.24**	**0.70**	**2.99**	**8.33**	**0.02**	**0.06**	**0.02**	**0.06**

Table 10.12 Crew and Supply Boat Fuel Use Limits

Supply Boats	Fuel Use Limits			
	gal/hr	gal/day	gal/qtr	gal/yr
Harmony/Heritage				
Main Engines - Controlled	143	143	6,006	6,006
Generator Engine - Uncontrolled	11.0	264	1,320	1,320
Bow Thruster - Uncontrolled	27.5	55	385	385
Winch - Uncontrolled	22.5	45	315	315

Supply Boats	Fuel Use Limits			
	gal/hr	gal/day	gal/qtr	gal/yr
Harmony/Heritage				
Controlled Engines	143	143	6,006	6,006
Uncontrolled Engines	61	364	2,020	2,020
Spot Charter	143	143	601	601
Total Supply Boats	347	650	8,627	8,627

Crew Boats	Fuel Use Limits			
	gal/hr	gal/day	gal/qtr	gal/yr
Harmony/Heritage				
Main Engines - Controlled	180	1,083	13,286	53,144
Auxiliary Engines	7	43	2,501	10,006

Crew Boats	Fuel Use Limits			
	gal/hr	gal/day	gal/qtr	gal/yr
Main Engines - Controlled	180	1,083	13,286	53,144
Auxiliary Engines	7	43	2,501	10,006
Spot Charter	180	1,083	1,329	5,314
Total Crew Boat	368	2,209	17,116	68,464

Spot Charter Boats	Fuel Use Limits			
Main Engines	gal/hr	gal/day	gal/qtr	gal/yr
Uncontrolled Crew Boats	180	1,083	1,329	5,314
Uncontrolled Supply Boat	143	143	601	601

Boats	Hourly Limits			
	Hourly	Daily	Quarterly	Yearly
Supply Boats:				
Main Engine	1	1	42	42
Spot Charter Main Engine	1	1	4	4
Generator Engine - Uncontrolled	1	24	120	120
Bow Thruster - Uncontrolled	1	2	14	14
Winch - Uncontrolled	1	2	14	14
Crew Boats:				
Main Engine	1	6	74	295
Spot Charter Main Engine	1	6	7	29
Auxiliary	1	6	347	1,389

Table 10.13 CPP and WGI Fuel Gas Limits

Cogeneration Power Plant	Fuel Use Limits			
	MMBtu/hr	MMBtu/day	MMBtu/qtr	MMBtu/yr
Normal Op Mode:				
Gas Turbine	463.000	11,112	1,011,192	4,044,768
HRSG	137.510	3,300	300,322	1,204,918
Tandem GT and HRSG	600.510	14,412	1,311,514	5,249,686
Bypass Stack	4.630	111	10,112	40,448
TOTAL	605.140	14,523	1,321,626	5,290,134
HRSG Only Mode:				
Gas Turbine				
HRSG	345.000	8,280	753,480	3,015,990
Bypass Stack				
Startup/Shutdown Mode:				
Gas Turbine/HRGS	308.821	618	1,853	5,559

Waste-Gas Incinerator	Fuel Use Limits			
	MMBtu/hr	MMBtu/day	MMBtu/qtr	MMBtu/yr
All Modes	12.320	295.680	26,981	107,923

Table 10.14 SGTP Incinerator SO_2 Calculations

SGTP Incinerator	Flow kscfh	Heat Rate LHV MMBtu/hr	LHV Btu/scf	Sulfur ppmv		Emission Factor lb/MMBtu SOx LHV	
Inlet Stream				**S1**	**S2 (28%)**	**S1**	**S2 (28%)**
Tail Gas - TGCU Amine Contactor	133.68	0.97	7.3	141	180	3.2840	4.2035
Merox Vent	0.37	0.30	810.8	4740	6067	0.9880	1.2646
Fuel Gas	9.99	11.05	1106.1	24	24	0.0037	0.0037
	134.05						

SGTP Incinerator Based on LHV	Material Balance (SOx as SO2)				Material Balance (SOx as SO2) with 28% Contingency			
Inlet Stream	**lb/hr**	**lb/day**	**tpq**	**tpy**	**lb/hr**	**lb/day**	**tpq**	**tpy**
Tail Gas - TGCU Amine Contactor	3.19	76.45	3.49	13.95	4.08	97.86	4.46	17.86
Merox Vent	0.30	7.11	0.32	1.30	0.38	9.11	0.42	1.66
Fuel Gas	0.04	0.97	0.04	0.18	0.04	0.97	0.04	0.18
TOTAL w/ Merox:	**3.52**	**84.54**	**3.86**	**15.43**	**4.50**	**107.93**	**4.92**	**19.70**
TOTAL w/out Merox:	**3.23**	**77.42**	**3.53**	**14.13**	**4.12**	**98.83**	**4.51**	**18.04**

SGTP Incinerator	EF	Units	lb/hr	lb/day	tpq	tpy
Planned Startup/Shutdown/Maintenance	6.20	lb/hr	6.20	148.80	0.26	1.04

Operational Limits:

hr/day =	24
hr/qtr =	84
hr/yr =	84

Notes:
(a) COS and H2S => SO2 1:1 molar ratio.

Table 10.15 Fixed Roof Tank Calculations (Tank ABJ-1401 A/B)

Basic Input Data	
liquid {1:G13, 2:G10, 3:G7, 4:C, 5:JP, 6:ker, 7:O2, 8:O6} =	4
liquid TVP =	11
if TVP is entered, enter TVP temperature (°F) =	110
tank heated {yes, no} =	no
if tank is heated, enter temp (°F) =	
vapor recovery system present? {yes, no} =	yes
is this a wash tank? {yes, no} =	no
will flashing losses occur in this tank? {yes, no} =	no
breather vent pressure setting range (psi) (def = 0.06):	0.06

Tank:	ABJ-1401A/B
Name:	Rerun Tanks
Distrcit:	Santa Barbara
Version:	Tank-2b.xls

Tank Data		
diameter (feet) =		70
capacity (enter barrels in first col, gals will compute) =	30,000	1,260,000
conical or dome roof? {c, d} =		d
shell height (feet) =		48
roof height (def = 1):		12.3
ave liq height (feet):		24
color {1:Spec Al, 2:Diff Al, 3:Lite, 4:Med, 5:Rd, 6:Wh} =		4
condition {1: Good, 2: Poor} =		1
upstream pressure (psig) (def = 0 when no flashing occurs):		0

Liquid Data	A	B
maximum daily throughput (bopd) =		140,000
Ann thruput (gal): (enter value in Column A if not max PTE)	7.665E+07	7.665E+07
RVP (psia):		7.28977
°API gravity =		21

Paint Factor Matrix		
	paint condition	
paint color	good	poor
spec alum	0.39	0.49
diff alum	0.60	0.68
lite grey	0.54	0.63
med grey	0.68	0.74
red	0.89	0.91
white	0.17	0.34

Molecular Weight Matrix	
liquid	mol wt
gas rvp 13	62
gas rvp 10	66
gas rvp 7	68
crude oil	50
JP -4	80
jet kerosene	130
fuel oil 2	130
fuel oil 6	190

Computed Values		
roof outage [1] (feet):		6.4
vapor space volume [2] (cubic feet):		116,993
turnovers [3] :		60.83
turnover factor [4] :		0.66
paint factor [5] :		0.68
surface temperatures (°R, °F)		
average [6] :	527.2	67.2
maximum [7] :	539	79
minimum [8] :	515.4	55.4
product factor [9] :		0.75
diurnal vapor ranges		
temperature [10] (fahrenheit degrees):		47.2
vapor pressure [11] (psia):		2.269712
molecular weight [12] (lb/lb-mol):		50
TVP [13] (psia) [adjusted for ave liquid surface temp]:		5.51665
vapor density [14] (lb/cubic foot):		0.048756
vapor expansion factor [15] :		0.33
vapor saturation factor [16] :		0.101128
vented vapor volume (scf/bbl):		8
fraction ROG - flashing losses:		0.308
fraction ROG - evaporative losses:		0.885

Adjusted TVP Matrix	
liquid	TVP value
gas rvp 13	7.908
gas rvp 10	5.56
gas rvp 7	3.932
crude oil	5.51665
JP -4	1.516
jet kerosene	0.0103
fuel oil 2	0.009488
fuel oil 6	0.0000472

RVP Matrix	
liquid	RVP value
gas rvp 13	13
gas rvp 10	10
gas rvp 7	7
crude oil	7.289773466
JP -4	2.7
jet kerosene	0.029
fuel oil 2	0.022
fuel oil 6	0.00019

Long-Term	
VRU_Eff=	99.80%
Short-Term	
VRU_Eff=	95.00%

Emissions	Uncontrolled ROC emissions			Controlled ROC emissions		
	lb/hr	lb/day	ton/year	lb/hr	lb/day	ton/year
breathing loss [17] =	7.02	168.47	30.75	0.35	8.42	0.06
working loss [18] =	25.17	604.18	110.26	1.26	30.21	0.22
flashing loss [19] =	0.00	0.00	0.00	0.00	0.00	0.00
TOTALS =	**32.19**	**772.64**	**141.01**	**1.61**	**38.63**	**0.28**

Table 10.16 Fixed Roof Tank Calculations (Tank ABJ-1402)

Basic Input Data	
liquid {1:G13, 2:G10, 3:G7, 4:C, 5:96VZ056, 6:ker, 7:O2, 8:O6} =	5
liquid TVP =	0.81
if TVP is entered, enter TVP temperature (°F) =	100
tank heated {yes, no} =	no
if tank is heated, enter temp (°F) =	
vapor recovery system present? {yes, no} =	yes
is this a wash tank? {yes, no} =	no
will flashing losses occur in this tank? {yes, no} =	no
breather vent pressure setting range (psi) (def = 0.06):	0.06

Tank:	ABJ-1402
Name:	Demulsifier Tk
Distrcit:	Santa Barbara
Version:	Tank-2b.xls

Tank Data		
diameter (feet) =		12
capacity (enter barrels in first col, gals will compute) =	300	12,600
conical or dome roof? {c, d} =		c
shell height (feet) =		19
roof height (def = 1):		1
ave liq height (feet):		9.5
color {1:Spec Al, 2:Diff Al, 3:Lite, 4:Med, 5:Rd, 6:Wh} =		4
condition {1: Good, 2: Poor} =		1
upstream pressure (psig) (def = 0 when no flashing occurs):		0

Liquid Data	A	B
maximum daily throughput (bopd) =		55.00
Ann thruput (gal): (enter value in Column A if not max PTE)	3.650E+04	3.650E+04
RVP (psia):		2.7
°API gravity =		21.47

Paint Factor Matrix	paint condition	
paint color	good	poor
spec alum	0.39	0.49
diff alum	0.60	0.68
lite grey	0.54	0.63
med grey	0.68	0.74
red	0.89	0.91
white	0.17	0.34

Molecular Weight Matrix	
liquid	mol wt
gas rvp 13	62
gas rvp 10	66
gas rvp 7	68
crude oil	50
JP -4	80
jet kerosene	130
fuel oil 2	130
fuel oil 6	190

Computed Values		
roof outage [1] (feet):		0.3
vapor space volume [2] (cubic feet):		1,108
turnovers [3] :		2.9
turnover factor [4] :		1
paint factor [5] :		0.68
surface temperatures (°R, °F)		
average [6] :	527.2	67.2
maximum [7] :	539	79
minimum [8] :	515.4	55.4
product factor [9] :		1.00
diurnal vapor ranges		
temperature [10] (Fahrenheit degrees):		47.2
vapor pressure [11] (psia):		0.416324
molecular weight [12] (lb/lb-mol):		80
TVP [13] (psia) [adjusted for ave liquid surface temp]:		0.81
vapor density [14] (lb/cubic foot):		0.011454
vapor expansion factor [15] :		0.115
vapor saturation factor [16] :		0.703871
vented vapor volume (scf/bbl):		0
fraction ROG - flashing losses:		0.308
fraction ROG - evaporative losses:		1

Adjusted TVP Matrix	
liquid	TVP value
gas rvp 13	7.908
gas rvp 10	5.56
gas rvp 7	3.932
crude oil	1.45867
96VZ056	0.81
jet kerosene	0.0103
fuel oil 2	0.009488
fuel oil 6	0.0000472

RVP Matrix	
liquid	RVP value
gas rvp 13	13
gas rvp 10	10
gas rvp 7	7
crude oil	0.947730129
JP -4	2.7
jet kerosene	0.029
fuel oil 2	0.022
fuel oil 6	0.00019

Long-Term VRU_Eff =	75.00%
Short-Term VRU_Eff =	75.00%

Emissions	Uncontrolled ROC emissions			Controlled ROC emissions		
	lb/hr	lb/day	ton/year	lb/hr	lb/day	ton/year
breathing loss [17] =	0.04	1.03	0.19	0.01	0.26	0.05
working loss [18] =	0.01	0.15	0.03	0.00	0.04	0.01
flashing loss [19] =	0.00	0.00	0.00	0.00	0.00	0.00
TOTALS =	**0.05**	**1.18**	**0.22**	**0.01**	**0.30**	**0.05**

Table 10.17 Fixed Roof Tank Calculations (Tank ABJ-3401 A/B)

Basic Input Data	
liquid {1:G13, 2:G10, 3:G7, 4:C, 5:JP, 6:ker, 7:O2, 8:O6} =	4
liquid TVP =	11
if TVP is entered, enter TVP temperature (°F) =	110
tank heated {yes, no} =	no
if tank is heated, enter temp (°F) =	110
vapor recovery system present? {yes, no} =	yes
is this a wash tank? {yes, no} =	no
will flashing losses occur in this tank? {yes, no} =	no
breather vent pressure setting range (psi) (def = 0.06):	0.0542

Tank: ABJ-3401A/B
Name: Oil Storage

Distrcit: Santa Barbara
Version: Tank-2b.xls

Tank Data		
diameter (feet) =		200
capacity (enter barrels in first col, gals will compute) =	254,591	10,692,822
conical or dome roof? {c, d} =		c
shell height (feet) =		56
roof height (def = 1):		11.46
ave liq height (feet):		28
color {1:Spec Al, 2:Diff Al, 3:Lite, 4:Med, 5:Rd, 6:Wh} =		4
condition {1: Good, 2: Poor} =		1
upstream pressure (psig) (def = 0 when no flashing occurs):		0

Liquid Data	A	B
maximum daily throughput (bopd) =		140,000
Ann thruput (gal): (enter value in Column A if not max PTE)	1.916E+09	1.916E+09
RVP (psia):		7.28977
°API gravity =		21

Paint Factor Matrix	paint condition	
paint color	good	poor
spec alum	0.39	0.49
diff alum	0.60	0.68
lite grey	0.54	0.63
med grey	0.68	0.74
red	0.89	0.91
white	0.17	0.34

Molecular Weight Matrix	
liquid	mol wt
gas rvp 13	62
gas rvp 10	66
gas rvp 7	68
crude oil	50
JP -4	80
jet kerosene	130
fuel oil 2	130
fuel oil 6	190

Computed Values		
roof outage [1] (feet):		3.8
vapor space volume [2] (cubic feet):		999,026
turnovers [3] :		179.21
turnover factor [4] :		0.33
paint factor [5] :		0.68
surface temperatures (°R, °F)		
average [6] :	527.2	67.2
maximum [7] :	539	79
minimum [8] :	515.4	55.4
product factor [9] :		0.75
diurnal vapor ranges		
temperature [10] (fahrenheit degrees):		47.2
vapor pressure [11] (psia):		2.269712
molecular weight [12] (lb/lb-mol):		50
TVP [13] (psia) [adjusted for ave liquid surface temp]:		5.51665
vapor density [14] (lb/cubic foot):		0.048756
vapor expansion factor [15] :		0.331
vapor saturation factor [16] :		0.097108
vented vapor volume (scf/bbl):		8
fraction ROG - flashing losses:		0.308
fraction ROG - evaporative losses:		0.885

Adjusted TVP Matrix	
liquid	TVP value
gas rvp 13	7.908
gas rvp 10	5.56
gas rvp 7	3.932
crude oil	5.51665
JP -4	1.516
jet kerosene	0.0103
fuel oil 2	0.009488
fuel oil 6	0.0000472

RVP Matrix	
liquid	RVP value
gas rvp 13	13
gas rvp 10	10
gas rvp 7	7
crude oil	7.289773466
JP -4	2.7
jet kerosene	0.029
fuel oil 2	0.022
fuel oil 6	0.00019

Long-Term
VRU_Eff = 99.80%

Short-Term
VRU_Eff = 95.00%

Emissions	Uncontrolled ROC emissions			Controlled ROC emissions		
	lb/hr	lb/day	ton/year	lb/hr	lb/day	ton/year
breathing loss [17] =	57.73	1385.58	252.87	2.89	69.28	0.51
working loss [18] =	314.68	7552.21	1378.28	15.73	377.61	2.76
flashing loss [19] =	0.00	0.00	0.00	0.00	0.00	0.00
TOTALS =	**372.41**	**8937.79**	**1631.15**	**18.62**	**446.89**	**3.26**

HAP Emission Factor Basis:

1. Gas Turbine - USEPA AP-42. Table 3.1-3 (4/00). Emission factors for Hazardous Air Pollutants from Natural Gas-Fired Turbines.
2. Heat Recovery Steam Generator - USEPA AP-42. Table 1.4-3 (7/98). Emission factors for Speciated Organic Compounds from Natural Gas Combustion
3. TGCU Waste Gas Incinerator - USEPA AP-42. Table 1.4-3 (7/98). Emission factors for Speciated Organic Compounds from Natural Gas Combustion
4. Fugitives - Gas Components - CARB. Speciation Manual. Second Edition (9/91). Profile Number 757 - Oil & Gas Production Fugitives - Gas Service.
5. Fugitives - Oil Components - CARB. Speciation Manual. Second Edition (9/91). Profile Number 756 - Oil & Gas Production Fugitives - Liquid Service.
6. Compressor Vent - CARB. Speciation Manual. Second Edition (9/91). Profile Number 757 - Oil & Gas Production Fugitives - Gas Service.
7. Boat Engines - USEPA AP-42. Table 3.3-2 (10/96). Speciated Organic Compound Emission Factors for Uncontrolled Diesel Engines
8. Thermal Oxidizer - USEPA AP-42. Table 1.4-3 (7/98). Emission factors for Speciated Organic Compounds from Natural Gas Combustion
9. Pigging Equipment - CARB. Speciation Manual. Second Edition (9/91). Profile Number 757 - Oil & Gas Production Fugitives - Gas Service.
10. Tanks/Sumps/Separators - CARB. Speciation Manual. Second Edition (9/91). Profile Number 297 - Crude Oil Evaporation
11. Solvents - APCD: Solvents assumed to contain 5% benzene, 5% toluene, 5% xylene

Table 10.18 Calculations for Estimated Exempt Emissions

A. Exempt IC Engine Calcs

Item	Equipment Category	Exemption Claimed	bhp	hrs/yr	NOx	ROC	CO	SOx	PM	PM10
					Tons Per Year (TPY)					
4	Power Pack	202.F.1.e	45	11	0.01	0.00	0.00	0.00	0.00	0.00
5	Manlift	202.F.1.c	47	326	0.24	0.02	0.05	0.03	0.02	0.02
6	Small Fork Lift DP30	202.F.1.c	62	481.5	0.46	0.03	0.10	0.05	0.03	0.03
7	Compressor	202.F.2	80	56.3	0.07	0.00	0.02	0.01	0.00	0.00
8	Compressor	202.F.2	80	5.9	0.01	0.00	0.00	0.00	0.00	0.00
9	Lark Fork Lift DP70	202.F.1.c	94	417.3	0.61	0.04	0.13	0.07	0.04	0.04
10	Backhoe	202.F.1.c	98	121	0.18	0.01	0.04	0.02	0.01	0.01
11	Compressor	202.F.2	110	35.4	0.06	0.00	0.01	0.01	0.00	0.00
12	30 ton crane	202.F.1.c	152	233	0.55	0.04	0.12	0.06	0.04	0.04
13	60 Ton Crane	202.F.2	201	16	0.05	0.00	0.01	0.01	0.00	0.00
14	Crane	202.F.1.c	600	10	0.09	0.01	0.02	0.01	0.01	0.01

Sum of engines with 20 < bhp < 100	506	AP-42 EF Table 3.3-1 lb/bhp-hr	
	NOx	0.0310	
	ROC	0.0021	
	CO	0.0067	
	SOx	0.0035	(SOx EF based on 0.50 wt % fuel)
	PM	0.0022	
	PM10	0.0022	

B. Exempt External Combustion Calcs

Item	Equipment Category	Exemption Claimed	HHV	MMSCF/yr	NOx	ROC	CO	SOx	PM	PM10
					Tons Per Year (TPY)					
8	Helicopters	202.F.1.a			0.00	0.00	0.00	0.00	0.00	0.00

		AP-42 EF Table 1.4-1, 1.4-2 lb/MMBtu	
	NOx	0.0980	
	ROC	0.0054	
	CO	0.0824	
	SOx	0.0133	(SOx EF based on 80 ppmv and 1020 Btu/scf)
	PM	0.0075	
	PM10	0.0075	

C. Other Exemption Calcs

Item	Equipment Category	Exemption Claimed	bhp	hrs/yr	NOx	ROC	CO	SOx	PM	PM10
					Tons Per Year (TPY)					
9	Surface Coating-Maintenance	202.D.8			0.00	6.00	0.00	0.00	0.91	0.13
10	Abrasive Blasting	202.H.3			0.00	0.00	0.00	0.00	0.00	0.00

10.3. Tanks, Sumps, and Separators List

Table 10.19 Tanks, Sumps, and Separators List

ID No.	PLANT	P&ID	EQUIPMENT NAME	CONTROL	CARB/KVB	Rule 331			Rule 325			Rule 326			Rule 344			
		X-			CATEGORY	Applies	Xmt By	Xmt From	Applies	Xmt By	Xmt From	Applies	Xmt By	Xmt From	Applies	Xmt By	Xmt From	Spill Containment?
ABH-1413	OTP	64	Open Drain Sump	CC	Tertiary	Y	-	-	Y	B.3	D.1, D.2	N	-	-	Y	B.1	all	Y
ABH-1414	OTP	63	Area Drain Sump	CC	Tertiary	Y	-	-	N	-	-	N	-	-	Y	B.1, B.4	all	N
ABH-1415	OTP	63	Area Drain Oil/H2O Separator	CC	Tertiary	Y	-	-	Y	B.3	D.1, D.2	N	-	-	Y	B.1, B.4	all	N
ABJ-1423	OTP	40	Oily Sludge Thickener	VRS	Tertiary	Y	-	-	Y	-	-	N	-	-	N	-	-	N
ABJ-1424	OTP	44	Equalization Tank	CC, Vent Scrub	Tertiary	Y	-	-	Y	B.3	D.1, D.2	N	-	-	N	-	-	N
ABJ-1425	OTP	49	Aeration Tank A	-	Tertiary	N	-	-	N	-	-	N	-	-	Y	B.2	all	N
ABJ-1426	OTP	50	Aeration Tank B	-	Tertiary	N	-	-	N	-	-	N	-	-	Y	B.2	all	N
ABJ-1428	OTP	49	Clarifier A	-	Tertiary	N	-	-	N	-	-	N	-	-	Y	B.2	all	N
ABJ-1429	OTP	50	Clarifier B	-	Tertiary	N	-	-	N	-	-	N	-	-	Y	B.2	all	N
ABJ-1431	OTP	51	Outfall Batch Tank	-	Tertiary	N	-	-	N	-	-	N	-	-	Y	B.2	all	N
ABH-1442	OTP	40	Backwash Sump	VRS	Tertiary	Y	-	-	Y	-	-	N	-	-	Y	B.1	all	Y
ABJ-1443	OTP	51D	Centrate Tank	-	Tertiary	N	-	-	Y	B.3	D.1, D.2	N	-	-	N	-	-	N
ABJ-1450	OTP	51	Skim Tank (142 bbl)	-	Tertiary	N	-	-	N	-	-	N	-	-	Y	B.2	all	N
ABJ-1421	OTP	40A	Backwash Collection Tank	VRS	Tertiary	Y	-	-	Y	B-5	all	N	-	-	N	-	-	N
ABH-3402	TT	23	Area Drain Oil/H2O Separator	CC	Tertiary	Y	-	-	Y	B.3	D.1, D.2	N	-	-	Y	B.1, B4	all	N
ABH-3403	TT	23	Area Drain Sump	-	Tertiary	Y	-	-	N	-	-	N	-	-	Y	B.1, B4	all	N
ABH-4405	SGTP	88	Area Drain Sump	CC	Tertiary	Y	-	-	N	-	-	N	-	-	Y	B.1, B4	all	N
ABH-4406	SGTP	88	Area Drain Oil/H2O Separator	CC	Tertiary	N	-	-	Y	B.3	D.1, D.2	N	-	-	Y	B.1, B4	-	N
ABH-4407	SGTP	89	Open Drain Sump	CC	Tertiary	Y	-	-	Y	B.3	D.1, D.2	N	-	-	Y	B.1	all	Y
MBJ-1104	OTP	40A	Clear Backwash Make-up Tank	VRS	Pressure Vessel	Y	-	-	Y	B.5	all	N	-	-	N	-	-	N
MBF-1108	OTP	45	AF Gas Separator	VRS	Pressure Vessel	Y	B.3.b	F.1-3, F.7	Y	B.5	all	N	-	-	N	-	-	N
MBM-1109	OTP	45	Aerobic Filter	VRS	Pressure Vessel	Y	B.3.b	F.1-3, F.7	Y	B.5	all	N	-	-	N	-	-	N
MBD-1138	OTP	41	VF Tower Feed Drum	VRS	Pressure Vessel	Y	-	-	Y	B.5	all	N	-	-	N	-	-	N
MBH-1152	OTP	64	Closed Drain Sump	VRS	Pressure Vessel	Y	-	-	Y	B.5	all	N	-	-	Y	B.1	all	Y
MBH-3107	TT	21	Closed Drain Sump	VRS1	Pressure Vessel	Y	-	-	Y	B.5	all	N	-	-	Y	B.1	all	Y
MBJ-4116	SGTP	35	Fuel Gas Amine Surge Tank	VRS2	Pressure Vessel	Y	-	-	N	-	-	N	-	-	N	-	-	N
MBD-4122	SGTP	40	COS Regeneration H2O Separator	VRS2	Pressure Vessel	Y	-	-	N	-	-	N	-	-	N	-	-	N
MBD-4123	SGTP	44	LPG Amine Flash Tank	VRS2	Pressure Vessel	Y	-	-	N	-	-	N	-	-	N	-	-	N
MBJ-4126	SGTP	45	LPG Amine Surge Tank	VRS2	Pressure Vessel	Y	-	-	N	-	-	N	-	-	N	-	-	N
MBJ-4149	SGTP	71	Tail Gas Amine Surge Tank	VRS2	Pressure Vessel	Y	-	-	N	-	-	N	-	-	N	-	-	N
MBH-4164	SGTP	77	Ethylene Glycol Drain Sump	VRS2	Pressure Vessel	Y	-	-	N	-	-	N	-	-	Y	B.1	all	Y
MBH-4165	SGTP	90	Pressure Drain Sump	VRS2	Pressure Vessel	Y	-	-	N	-	-	N	-	-	N	-	-	N
MBH-4166	SGTP	79	Closed Drain Sump	VRS2	Pressure Vessel	Y	-	-	Y	B.5	all	N	-	-	Y	B.1	all	Y
MBH-4168	SGTP	37	Fuel Gas Amine Drain Sump	VRS2	Pressure Vessel	Y	-	-	N	-	-	N	-	-	Y	B.1	all	Y
MBH-4169	SGTP	47	LPG Amine Drain Sump	VRS2	Pressure Vessel	Y	-	-	N	-	-	N	-	-	Y	B.1	all	Y
MBH-4170	SGTP	73	TG Amine Drain Sump	VRS2	Pressure Vessel	Y	-	-	N	-	-	N	-	-	Y	B.1	all	Y
MBH-4171	SGTP	54	Waste Caustic Drain Sump	VRS2	Pressure Vessel	Y	-	-	N	-	-	N	-	-	Y	B.1	all	Y
MBD-4172	SGTP	76	Rich EG Flash Tank	VRS2	Pressure Vessel	Y	-	-	N	-	-	N	-	-	N	-	-	N
HBC-4246	SGTP	76	Ethylene Glycol Reboiler	VRS2	Pressure Vessel	Y	-	-	N	-	-	N	-	-	N	-	-	N
MBD-4114	SGTP	34	Fuel Gas amine Flash Gas Tank	VRS2	Pressure Vessel	Y	-	-	N	-	-	N	-	-	N	-	-	N
ABJ-1401A	OTP	52	Rerun Tank A	VRS	Atmosph. Tank	Y	-	-	Y	-	-	N	-	-	N	-	-	N
ABJ-1401B	OTP	52A	Rerun Tank B	VRS	Atmosph. Tank	Y	-	-	Y	-	-	N	-	-	N	-	-	N
ABJ-1402	OTP	69	Demulsifier Storage Tank	Vent to atm.	Atmosph. Tank	Y	-	-	N	-	-	Y	-	-	N	-	-	N
ABJ-3401A	TT	8	Oil Storage Tank A	VRS1	Atmosph. Tank	Y	-	-	Y	-	-	N	-	-	Y	B.1	all	Y
ABJ-3401B	TT	9	Oil Storage Tank B	VRS1	Atmosph. Tank	Y	-	-	Y	-	-	N	-	-	Y	B.1	all	Y
ZZZ-1537	OTP	51C	Sludge Cake Tote Bins	CC	-	Y	-	-	N	-	-	N	-	-	N	-	-	N
ZBH-3502	TT	22	Emergency Curtailment Basin	-	-	Y	-	-	N	-	-	N	-	-	Y	B.1	all	N
ZZZ-4501	SGTP	95	LPG Loading Racks (2)	VRS3	- (fug. I&M comps)	Y	-	-	N	-	-	N	-	-	N	-	-	N
ABJ-1416	OTP	67	Diesel Storage Tank	Vent to atm.	Atmosph. Tank	Y	B.3.a	F.1-3, F.7	N	-	-	Y	B.1.b	all	N	-	-	N
ABJ-1417	OTP	72	SOV Lube Oil Tank	Vent to atm.	Atmosph. Tank	Y	B.3.a	F.1-3, F.7	N	-	-	Y	B.1.b	all	N	-	-	N
ABJ-1419	OTP	84	VR Lube Oil Tank	Vent to atm.	Atmosph. Tank	Y	B.3.a	F.1-3, F.7	N	-	-	Y	B.1.b	all	N	-	-	N

-- This page left blank intentionally --

10.4. Source NEI

Table 10.20 Exxon – SYU Stationary Source NEI-90

I. This Project's Facility NEI-90

Facility	Date	NOx		ROC		CO		SOx		PM		PM10	
No.	Issued	lb/day	ton/yr	lb/day	ton/yr	lb/day	ton/yr	lb/day	ton/yr	lb/day	ton/yr	lb/day	ton/yr
1482		**1008.93**	**98.58**	**866.09**	**69.95**	**551.55**	**87.64**	**249.31**	**44.26**	**289.19**	**47.73**	**237.26**	**38.48**

II. Other Facility "P1s" at this SSN
Enter all other facility "P1" NEI-90s below:

Facility	Date	NOx		ROC		CO		SOx		PM		PM10	
No.	Issued	lb/day	ton/yr	lb/day	ton/yr	lb/day	ton/yr	lb/day	ton/yr	lb/day	ton/yr	lb/day	ton/yr
3170		6.98	0.64	22.08	3.99	132.77	22.98	70.22	12.92	1.32	0.08	1.26	0.08
8009		901.42	0.00	20.29	3.62	142.83	0.44	45.21	0.00	53.36	0.00	51.23	0.00
8018		450.58	0.00	16.41	1.32	71.42	0.29	22.60	0.00	26.69	0.00	25.61	0.00
8019		450.58	0.00	32.52	4.25	71.42	0.29	22.60	0.00	26.69	0.00	25.61	0.00
Totals		**1,809.57**	**0.64**	**91.30**	**13.18**	**418.45**	**24.00**	**160.63**	**12.92**	**108.06**	**0.08**	**103.71**	**0.08**

Notes:
(1) Facility NEI from IDS.
(2) Totals only apply to permits for this facility ID. Totals may not appear correct due to rounding.
(3) Because of rounding, values in this table shown as 0.00 are less than 0.005, but greater than zero.

III. Other Facility "P2" NEI-90 Decreases at this SSN
Enter all other facility "P2" NEI-90s below:

Facility	Date	NOx		ROC		CO		SOx		PM		PM10	
No.	Issued	lb/day	ton/yr	lb/day	ton/yr	lb/day	ton/yr	lb/day	ton/yr	lb/day	ton/yr	lb/day	ton/yr
3170			0.00	5.76	1.05	0.00	0.00	0.00	0.00	0.00	0.00	0.00	0.00
Totals		**0.00**	**0.00**	**5.76**	**1.05**	**0.00**	**0.00**	**0.00**	**0.00**	**0.00**	**0.00**	**0.00**	**0.00**

Notes:
(1) Facility NEI from IDS.
(2) Totals only apply to permits for this facility ID. Totals may not appear correct due to rounding.
(3) Because of rounding, values in this table shown as 0.00 are less than 0.005, but greater than zero.

IV. Other Facility Pre-90 "D" Decreases at this SSN
Enter all other facility "D" decreases below:

Facility	Date	NOx		ROC		CO		SOx		PM		PM10	
No.	Issued	lb/day	ton/yr	lb/day	ton/yr	lb/day	ton/yr	lb/day	ton/yr	lb/day	ton/yr	lb/day	ton/yr
Totals		**0.00**	**0.00**	**0.00**	**0.00**	**0.00**	**0.00**	**0.00**	**0.00**	**0.00**	**0.00**	**0.00**	**0.00**

Notes:
(1) Facility "D" from IDS.
(2) Totals only apply to permits for this facility ID. Totals may not appear correct due to rounding.
(3) Because of rounding, values in this table shown as 0.00 are less than 0.005, but greater than zero.

V. Calculate This SSN's NEI-90
Table below summarizes SSN NEI-90 as equal to sum of each facility's: I+ (P1-P2) -D

	NOx		ROC		CO		SOx		PM		PM10	
Term	lb/day	ton/yr	lb/day	ton/yr	lb/day	ton/yr	lb/day	ton/yr	lb/day	ton/yr	lb/day	ton/yr
Project Facility "I"	1,008.93	98.58	866.09	69.95	551.55	87.64	249.31	44.26	289.19	47.73	237.26	38.48
Other Fac P1	1,809.57	0.64	91.30	13.18	418.45	24.00	160.63	12.92	108.06	0.08	103.71	0.08
Other Fac P2	0.00	0.00	5.76	1.05	0.00	0.00	0.00	0.00	0.00	0.00	0.00	0.00
Other Fac D	0.00	0.00	0.00	0.00	0.00	0.00	0.00	0.00	0.00	0.00	0.00	0.00
SSN NEI-90	**2,818.50**	**99.22**	**951.62**	**82.08**	**970.00**	**111.64**	**409.94**	**57.18**	**397.25**	**47.81**	**340.97**	**38.56**

Notes:
(1) Resultant SSN NEI-90 from above Section I thru IV data.
(2) Totals only apply to permits for this facility ID. Totals may not appear correct due to rounding.
(3) Because of rounding, values in this table shown as 0.00 are less than 0.005, but greater than zero.

10.5. APCD Exempt/Part 70 Insignificant Emission Units

The list below designates Rule 202 permit exempt list of emissions units at Las Flores Canyon. Unless where otherwise noted by a double asterisk (**), this list also serves to designate those emission units as Insignificant under Part 70.

1. Portable Abrasive blasting equipment (does not include associated IC engine).

2. Diesel fuel storage tanks and containers.

3. Lube oil storage tanks and containers.

4. Single pieces of degreasing equipment that have a liquid surface area of less than one square foot and where the total aggregate liquid surface area of all such units at the stationary source is less than 10 square feet.

10.6. NSPS Compliance Report

Review of Applicability and Compliance with Specific Federal Requirements at ExxonMobil's Las Flores Canyon Oil and Gas Plant during the Source Compliance Demonstration Period

40 CFR 60 Standards of Performance for New Stationary Sources;
40 CFR 72 Permits Regulation (Subpart A: Acid Rain Program General Provisions)

40 CFR 60 Standards of Performance for New Stationary Sources

The following review is based on 40 CFR 60 dated July 1, 1996. The review generally assesses ExxonMobil's ability to demonstrate compliance with requirements of specific subparts of 40 CFR 60 during the Source Compliance Period (SCDP) at their Las Flores Canyon (LFC) facility.

Subpart A – General Provisions

§60.8 (Performance tests.) Performance tests where required by Subparts Db, GG, Kb and LLL for specific equipment at ExxonMobil's LFC Cogeneration Power Plant (CPP) and Stripping Gas Treating Plant (SGTP) have been completed, and written reports have been submitted to the APCD.

Pursuant to §60.8(a), ExxonMobil is also required to perform periodic source testing of such equipment. A summary of source test results to date is attached to this review. Source test reports are available for public review at the APCD office in Goleta, California. Results of all tests indicate that ExxonMobil operates the emissions units source tested in compliance with applicable NSPS requirements.

§60.11 (Compliance with standards and maintenance requirements.) Compliance with the standards in this part are to be determined by performance tests established in §60.8, except for opacity standards which apply at all times except during periods of startup, shutdown and malfunction. The opacity standards applicable to the Thermal Oxidizer are called out in §60.18; this assumes that the Thermal Oxidizer is a control device as described in the Subpart Kb review below.

§60.11 also requires that during periods of startup, shutdown and malfunction, owners and operators shall to the extent practicable maintain and operate any affected facility in a manner consistent with good air pollution control practice for minimizing emissions.

ExxonMobil's compliance status with NSPS requirements during periods of normal equipment operations is provided by source test reports and CEMS data. As noted in the above review of §60.11 above, a summary of source test results is attached to this review.

In addition to source testing, compliance with NSPS and permitted emissions limits is verified using Continuous Emissions Monitoring Systems (CEMS). Some CEMS information for the CPP and the SGTP is telemetered to the APCD real time; additional information has been submitted in quarterly reports. CEMS data is available for public review at the APCD office in Goleta, California.

§60.13 (Monitoring requirements.) The requirements of this section apply to the Heat Recovery Steam Generator (HRSG) and the Gas Turbine Generator (GTG) at the CPP, and to the Waste Gas Incinerator (WGI) at the SGTP.

CEMS requirements are detailed in Section 10.1 of ATC 5651-17/PTO 5651. Because ATC 5651 Condition 52 (Continuous Emissions Monitoring) and Sec. 4.9 specifies that CEMS be installed and operated consistent with the requirements of 40 CFR Parts 51, 52 and 60, the LFC CEMS devices were installed and operational prior to implementing the performance tests required by §60.8. ExxonMobil has obtained APCD approval of a LFC CEMS Plan, and operates the CEMS devices on a continuous basis except for system breakdowns, repairs, calibration checks and required zero and span adjustments. To date, CEMS devices have been required to complete and report one cycle of operation each 6 minutes. With the issuance of ATC 5651-17/PTO 5651, the allowable cycle time increases to 15 minutes per §60.13(e)(2).

Excess emissions are converted to and reported in units of LFC permits §60.13(h) and §60.13(i)(5). Cylinder gas audits and relative accuracy tests performed quarterly indicate that CEMS devices at LFC meet the requirements of 40 CFR 60 Appendix B Specification 2.

§60.18 (General control device requirements.)

Thermal Oxidizer: The requirements of this section apply to flares used as control devices. The Thermal Oxidizer (EAW-1601) is such a control; it's use is described in detail in Section 4.5 of ATC 5651-17/ PTO 5651 and in the Subpart Kb review below. Flares are to be operated with no visible emissions (monitored per Reference Method 22), with a flame present at all times, and with certain limits on gases being combusted and flare tip exit velocities.

APCD inspectors have observed the thermal oxidizer at LFC for visible emissions following APCD Regulatory Compliance Division Policy and Procedure I.D.1 (which in turn is based on 40 CFR 60 Appendix A Method 9). No visible emissions have been observed.

ExxonMobil operators have observed the thermal oxidizer at LFC for visible emissions during flare events, following ExxonMobil's LFC Standard Operating Procedure (SOP) Reg. 009. This SOP calls for observations of the thermal oxidizer for at least 5 minutes during each flare event for each flare period of 2 hours or less. Additionally, a video camera controlled from the LFC control room can be directed at the flare stack. ExxonMobil's records show no visible emissions recorded to date, either looking directly at the stack or viewing it from the control room through the video camera.

Subpart Db - Standards of Performance for Industrial-Commercial-Institutional Steam Generating Units

The Heat Recovery Steam Generator (HRSG) at the LFC Cogeneration Power Plant was constructed after June 19, 1984, has a rated maximum heat input of 345 MMBtu/hr (HHV), and is the affected facility to which this subpart applies.

The standard for sulfur (§60.42b) does not apply to this unit as it does not burn coal or oil.

The standard for particulate matter (§60.43b) does not apply as it does not burn coal, oil, wood or other municipal waste.

The standard for nitrogen oxides (§60.44b(a)) applies, as the HRSG combusts only natural gas. The applicable limits are:

- For Duct Burner only: 0.10 lb NOx/MMBtu at low heat release rate {§60.42b(a)(i)}, and 0.20 lb NOx/MMBtu at high release rate §60.42b(a)(i)}. Note: Low heat release rate means a heat release rate of 70,000 Btu/hour-ft^3, or less; high heat release rate means a heat release rate greater than 70,000 Btu/hour-ft^3.

- For Duct Burner and Gas Turbine operating in tandem: 0.20 lb NOx/MMBtu at all heat input rates.

The Best Available Control Technology (BACT) limit of ATC 5651 was 0.033 lb NOx/MMBtu at all loads. Source test results indicate that ExxonMobil is able to comply with this limit. As this permitted limit is more stringent than those of both the low heat and high heat release rates, ExxonMobil complies with the NSPS limit. Additionally, the new permit ATC 5651-17/PTO 5651 BACT NOx limit for the HRSG alone is 0.0300 lb NOx/MMBtu, and for the HRSG and the Gas Turbine Generator (GTG) in tandem is 0.0272 lb NOx/MMBtu. Compliance with these limits will satisfy the §60.44b(a) NOx limits. Compliance with these limits will be demonstrated annually by source testing.

§60.48b(h) indicates that ExxonMobil is not required to install or operate CEMS for measuring nitrogen oxides emissions of the HRSG. However, CEMS are installed and NOx emissions from operation of the HRSG and from operation of the HRSG in tandem with the Gas Turbine Generator are telemetered to the District. To date, ExxonMobil has met the 90% quarterly data capture rate requirement for NOx CEMS at the CPP as detailed in APCD's *Continuous Emission Monitoring Protocol* (October 22, 1992 with updates).

It should be noted that ExxonMobil's CEMS at LFC are audited quarterly per the requirements of the APCD's *Continuous Emission Monitoring Protocol* (October 22, 1992 with updates). ExxonMobil's equipment has passed the requirements of all Cylinder Gas Audits, Relative Accuracy Audits and Relative Accuracy Test Audits. Records of these audits are available at the APCD Goleta, California office.

§60.49b (Reporting and Recordkeeping) requires in §60.49b(d) that records be recorded and maintained of the amounts of natural gas fuel combusted per day, and that the annual capacity factor be calculated on a quarterly basis. ("Annual capacity factor" is the ratio of the actual heat input to a steam generating unit during a calendar year to the potential heat input had it been operated for 8,760 hours per year at the maximum steady state design heat input capacity. The annual capacity factor is determined on a 12-month rolling average basis with a new annual capacity factor calculated at the end of each calendar month.) For ExxonMobil's HRSG, the required fuel use data is recorded and maintained.

<u>Subpart Kb</u> (§60.110b - §60.117b) – Standards of Performance for Volatile Organic Liquid Storage Vessels for Which Construction, Reconstruction, or Modification Commence after July 23, 1984.

The requirements of this subpart apply to the two nominal 270,000 bbl crude oil storage tanks (ABJ-3401 A&B) and the two nominal 30,000 bbl rerun tanks (ABJ-1401 A&B). The District does not consider that Subpart Kb applies to the Equalization Tank (ABJ-1424), the Anaerobic Filter

(MBM-1109), or Aeration Tanks A and B (ABJ-1425 and 1426, respectively) as these tanks are part of the Water Treating Plant, and their function is not to store volatile organic liquids.

The tanks to which the Subpart applies must satisfy the requirements of §60.112b to reduce inlet VOC emissions by 95%. To satisfy this requirement, they are connected to a closed vent system and control device. The primary control device is the Stripping Gas Treating Plant; the secondary or backup control device is the Thermal Oxidizer. The Thermal Oxidizer supports the closed vent system during periods of startup, shutdown and malfunction of the SGTP.

The requirements for closed vent systems with control device are detailed in §60.112b(a)(3). (The crude oil storage tanks each have an internal floating roof, but as these were installed for fire risk reduction, they are not considered as air pollution control devices.) The requirements are:

a. The closed vent system components must operate at no detectable emissions with an instrument reading of 500 ppm or less above background. This requirement is satisfied by ExxonMobil's Inspection and Maintenance Program which specifies that all components connected to the vapor recovery system must meet the 500 ppm or less criteria, or be repaired on the schedule of a minor leak per APCD Rule 331 (Fugitive Emissions Inspection and Maintenance).

b. The control device (i.e., the Stripping Gas Treating Plant and/or the Thermal Oxidizer) shall reduce VOC emissions by 95 percent or greater. The APCD believes that proper operation of the Stripping Gas Treating Plant and the Thermal Oxidizer meets this VOC emissions reduction requirement.

ExxonMobil has obtained District approval of a *Subpart Kb Operating Plan* which complies with the requirements of §60.113b(c)(1)(i) and (ii). The approved plan details how ExxonMobil will operate, monitor and report on the affected tanks, closed vent system and control device in compliance with Subpart Kb.

<u>Subpart GG</u> (§60.330 - §60.335) – Standards of Performance for Stationary Gas Turbines

The gas turbine generator is the affected facility at LFC that is subject to the requirements of this subpart. §60.332(a) specifies NOx emission limits. §60.332(b), (c), and (d) describe the applicability of the limits in §60.332(a). As the 463 MMBtu turbine does not fall into any of the sub-items of §60.332 (i.e., (b) through (l)), none of the NO_x standards in §60.332(a)(1) or (2) apply.

§60.633 specifies alternate allowable standards for SO_2: (a) limits exhaust gas concentration to 0.015 percent by volume at 15% oxygen on a dry basis, and (b) prohibits the burning of fuel gas with a sulfur concentration exceeding 0.8 percent by weight. During the SCDP of ATC 5651 (and modifications thereof), ExxonMobil has demonstrated compliance with the permitted limit of 24 ppm by volume of sulfur of ATC 5651 (and modifications thereof) during annual source tests and in quarterly fuel gas sample. As the 24 ppmv limit is far lower than the 0.8 percent by weight limit (equivalent to 650 ppmv, assuming a MW of 26 for fuel gas), ExxonMobil has demonstrated compliance with this NSPS requirement. As ATC 5651-17/ PTO 5651 has the same 24.0 ppm total sulfur limit for fuel gas; compliance with this permit limit will ensure compliance with the SO_2 standard of §60.333.

ExxonMobil satisfies the requirements of §60.334 as CEMS devices are installed to monitor fuel usage, water injection rates, and NOx concentrations in turbine exhaust. The sulfur content of fuel

gas is determined by a gas chromatograph which measures H_2S; a previous study showed minimal concentrations of sulfur compounds other than H_2S in the fuel gas. Total sulfur content is sampled and monitored quarterly to document compliance with the total sulfur limit of 24.0 ppmv; all fuel gas samples analyzed to date have been well below this limit.

<u>Subpart KKK</u> (§60.630 - §60.636) – Standards of Performance for Equipment Leaks of VOC from Onshore Natural Gas Processing Plants

The Stripping Gas Treating Plant and vapor recovery systems feeding into the SGTP are the affected facilities at LFC to which the requirements of this subpart apply.

ExxonMobil's compliance with the requirements of this subpart is assessed by APCD's monitoring of their implementation of an APCD-approved *Fugitive Emissions Inspection and Maintenance Plan for Las Flores Canyon Process Facilities.* This plan is based on the requirements of APCD Rule 331 (*Fugitive Emissions Inspection and Maintenance*), which satisfies the Best Available Control Technology requirement of the original ATC 5651. The plan establishes a leak detection and repair program, with specific supplemental requirements for components in those parts of LFC subject to Subpart KKK (e.g., pressure relief devices and components in closed vent systems kept at less than 500 ppm above background). BACT in the original permit required installation of a certain percentage of bellows seal valves and other low-emitting valves. Rule 331 also requires the implementation of BACT for "critical" components; the most recent BACT standard is the implementation of specific technologies to meet a performance standard of 100 ppm.

In addition to the requirements of Subpart KKK and Rule 331 including BACT, some components are subject to enhanced I&M programs (e.g., monthly monitoring of specific valves) to create Emission Reduction Credits used to mitigate increased ROC emissions at ExxonMobil's platforms Harmony and Heritage.

ExxonMobil's compliance with the requirements of Subpart KKK is assessed via compliance with the approved I&M program and Rule 331 requirements.

<u>Subpart LLL (Standards of Performance for Onshore Natural Gas Processing: SO2 Emissions)</u>

The Sulfur Recovery Unit at ExxonMobil's LFC Stripping Gas Treating Plant is the affected facility to which the requirements of this subpart apply. Per§60.640(b), as the SRU (see Section 2 of ATC 5651-17/PTO 5651) has a design capacity equal to or greater than 2 long tons/day of H2S, it is not exempt from the requirements of §60.642 through §60.646.

ExxonMobil's actual sulfur production has averaged 3.7 long tons per day for the five calendar quarter period from 1Q97 thorough the 1Q98. Using monitoring devices compliant with §60.646 (Monitoring of emissions and operations) during periods of routine operation, ExxonMobil has demonstrated SO_2 emission reduction efficiencies on a daily basis of 99.9 percent or better. As required by ATC 5651, these records are presented in quarterly reports which are available for public review at the APCD's office in Goleta, California. The upcoming ATC 5651-17/PTO 5651 also requires tracking and reporting of SO_2 emission reduction efficiencies.

40 CFR 72 Permits Regulation (Subpart A: Acid Rain Program General Provisions)

NOTE: The following review is based on the July 1, 1995 version of 40 CFR 72.

The APCD has reviewed ExxonMobil's quarterly reports of records of Cogeneration Power Plant (CPP) power generation and sales. Our review indicates that the CPP is not an "affected source" pursuant to §72.6(b)(4)(i), as it does not sell more than one-third of its power to a utility power distribution system. A summary of these records is attached.

10.7. APCD Response to Comments

The APCD received the following comments on the draft permit:

10.8 Phase III Water Treatment Plant

Table 10.8
ExxonMobil Las Flores Canyon: Part 70 PTO 5651
Components for Approved Future Construction of Third Oil Train and
Phase III Water Treatment Plant

Gas/Light Liquid Service	Phase III Oil Plant Expansion			Phase III Produced Water Plant Expansion		
		#	Unit		#	Unit
Valves - Bellows		65	comp-lp		13	comp-lp
Valves - Accessible Monthly		0	comp-lp		0	comp-lp
Valves - Accessible		11	comp-lp		2	comp-lp
Valves - Inaccessible		1	comp-lp		0	comp-lp
Valves - Unsafe		0	comp-lp		0	comp-lp
Valves - LEV Accessible Monthly		0	comp-lp		0	comp-lp
Valves - LEV Accessible		16	comp-lp		3	comp-lp
Valves - LEV Inaccessible		1	comp-lp		0	comp-lp
Valves - LEV Unsafe		0	comp-lp		0	comp-lp
Valves - E500		66	comp-lp		13	comp-lp
Relief Valves		0	comp-lp		0	comp-lp
Compressor Seals - To VRU		0	comp-lp		0	comp-lp
Flanges/Connections		313	comp-lp		63	comp-lp
Flanges/Connections - Unsafe		0	comp-lp		0	comp-lp
Flanges/Connections - E500		301	comp-lp		60	comp-lp
Exempt		58	comp-lp		12	comp-lp
	sub-total	**832**	**comp-lp**	**sub-total**	**166**	**comp-lp**

Gas/Light Liquid Service	Phase III Oil Plant Expansion			Phase III Produced Water Plant Expansion		
		#	Unit		#	Unit
Valves - Bellows	--	149	comp-lp		30	comp-lp
Valves - Accessible	--	41	comp-lp		8	comp-lp
Valves - Inaccessible	--	0	comp-lp		0	comp-lp
Valves - Unsafe	--	0	comp-lp		0	comp-lp
Valves - LEV Accessible	--	104	comp-lp		21	comp-lp
Valves - LEV Inaccessible	--	6	comp-lp		1	comp-lp
Valves - LEV Unsafe	--	0	comp-lp		0	comp-lp
Valves - E500	--	0	comp-lp		0	comp-lp
Pump Seals - Tandem	--	1	comp-lp		1	comp-lp
Pump Seals - Single	--	0	comp-lp		0	comp-lp
Flanges/Connections	--	1291	comp-lp		258	comp-lp
Flanges/Connections - Unsafe	--	0	comp-lp		0	comp-lp
Flanges/Connections - E500	--	1	comp-lp		1	comp-lp
Exempt	--	310	comp-lp		62	comp-lp
	sub-total	**1,903**	**comp-lp**		**382**	**comp-lp**