PINAL POWER, LLC
30 MEGAWATT BIOMASS ENERGY PROJECT

38743 West Cowtown Road
Maricopa, Arizona 85238

Application for Authority to Construct
And Title V Operating Permit

Prepared for:

Pinal Power, LLC

For submittal to:

Pinal County Air Quality Control District

July 2010

Table of Contents

EXECUTIVE SUMMARY 1

1.0 INTRODUCTION 1

2.0 PROJECT DESCRIPTION 4

2.1 Plant Description and Operations 4

2.2 Alternative Operating Scenarios 8

2.3 Process Flow Diagrams and Mass Balance 8

3.0 SITE DESCRIPTION 11

3.1 Process and Control Equipment 11

4.0 PROJECT EMISSIONS EVALUATION 15

4.1 Emission Sources 15

4.2 Boiler Emissions 15

4.2.1 Criteria Pollutant Emissions 15

4.2.2 Hazardous Air Pollutant Emissions 16

4.3 Fuel Receiving, Handling, Storage, and Processing Area 18

4.4 Ash Handling, Storage, and Shipment Area 20

5.0 REGULATORY ANALYSIS 21

5.1 Federal Air Quality Regulations 21

5.1.1 New Source Review 21

5.1.2 New Source Performance Standards 22

5.1.3 National Emission Standards for Hazardous Air Pollutants 23

5.1.4 Acid Rain Provisions 23

5.1.5 Federal Operating Permit 24

5.1.6 Compliance Assurance Monitoring 24

5.2 Local Air Quality Regulations – Pinal County Air Quality Control District Code of Regulations 26

5.2.1 Section 3-1-040, Applicability and Classes of Permits 26

5.2.2 Section 3-1-083, Compliance Provisions 26

5.2.3 Section 3-1-084, Voluntarily Accepted Federally Enforceable Emissions Limitations; Applicability; Reopening; Effective Date 26

5.2.4 Section 3-1-103, Annual Emissions Inventory Questionnaire 27

5.2.5 Section 3-1-150, Monitoring 27

5.2.6 Section 3-1-160, Test Methods and Procedures 27

5.2.7 Section 3-1-170, Performance Tests 27

5.2.8 Section 3-1-173, Quality Assurance 27

5.3 Local Air Quality Regulations – Pinal-Gila Counties Air Quality Control District Regulations 28

5.3.1 Regulation 7-3-1.1 Visible Emissions: General 28

5.3.2 Regulation 7-3-1.2 Fugitive Dust 28

5.3.3 Regulation 7-3-1.7 Fuel Burning Equipment 28

5.3.4 Regulation 7-3-2.2 Fuel Burning Installations – Sulfur Compounds 29

5.3.5 Regulation 7-3-4.1 Industrial – Carbon Monoxide Emissions 29

5.3.6 Regulation 7-3-5.1 Fuel Burning Equipment – Nitrogen Oxide Emissions 29

6.0 CONTROL TECHNOLOGIES 30

6.1 NOx Controls 30
6.2 CO Controls 31
6.3 Particulate Matter Controls 31
6.4 VOC Controls 32
6.5 SO_2 Controls 32
6.6 Startup, Shutdown, and Periods of Upset 33
7.0 COMPLIANCE REQUIREMENTS 34
7.1 Testing 34
7.1.1 Initial Performance Tests 34
7.1.2 Test Protocol 34
7.1.3 Subsequent Performance Testing 34
7.1.4 Acid Rain Compliance 35
7.2 Monitoring 35
7.2.1 Continuous Emissions Monitoring 35
7.2.2 Parametric Emissions Monitoring Requirements 36

EXECUTIVE SUMMARY

Pinal Power, LLC, an Arizona limited liability corporation, is proposing to construct, own and operate a 30 MW (net) biomass power project in Pinal County, Arizona. The project has access to and is contracting for sufficient municipal green waste, agricultural wood waste, Guayule and other feedstock generated in the local area to fuel the project though its projected 30-year lifetime. The Project will be located in Pinal County, Arizona, inside the Mariposa City limits in an area zoned Industrial bounded by Cowtown Road as shown on Attachment A. The site consists of approximately 45.3 acres and the current address of the site is 38743 West Cowtown Road. The site is owned by the Project owners, Pinal Power LLC.

The Pinal Power Project will be a wood-waste biomass energy plant producing 30+ megawatts (MW) of electrical output. It will be fueled primarily by municipal green waste and agricultural wood waste derived from agricultural operations in the area within 30 miles of the plant. The project will consume approximately 260 thousand bone dry tons (BDT) of wood waste annually. The plant will include an automated fuel feed system, boiler feed water treatment, combustor and boiler, steam turbine, condenser, multicone dust collector, ESP, and evaporative cooling tower. It will be interconnected to the grid via a 69kV transmission line terminating at an APS transmission line approximately 13 miles from the project. The net electrical output will be sold under a long-term power purchase agreement.

The Pinal Power facility will utilize proven equipment provided by experienced suppliers to provide exceptional availability while producing "green" energy. In addition, Pinal Power will employ emission controls to insure that the plant will control air emissions while maintaining maximum efficiency. The equipment will include a field-erected water wall boiler incorporating a vibrating grate system with a multi-level over fire air system for low emission combustion. Particulate emissions will be controlled by a multicone dust collector followed by a three (3) zone electro-static precipitator (ESP). NOx emissions will be controlled through the use of selective catalytic reduction (SCR) and selective non-catalytic reduction (SNCR). CO emissions will be controlled with an oxidation catalyst.

The facility will be subject to Title V requirements as there is a potential for annual emissions of CO to be above 100 tons per year. As an electric generating facility with the potential to generate more than 25 MW, the facility will also be subject to the requirements of the Title IV Acid Rain Program.

The proposed project is a minor source with respect to Prevention of Significant Deterioration (PSD) requirements, and is therefore not subject to Best Available Control Technology (BACT) requirements. Emissions of all criteria pollutants are less than 250 tons per year.

1.0 INTRODUCTION

This Application for Authority to Construct and Title V Permit Application is being submitted by Pinal Power LLC to the Pinal County Air Quality Control District (PCAQCD) for the proposed is proposing to construct, own and operate a 30 MW (net) biomass power project in Pinal County, Arizona.

The proposed Pinal Power LLC Biomass Plant will be capable of producing a nominal 30 MW of electrical power through the use of a highly efficient water wall boiler with vibrating grate, which is ideal for combusting biomass materials. The Plant will incorporate into its design state of the art control technologies and techniques for reducing air emissions to the extent feasible. The primary fuel for the boiler will be biomass, including municipal green waste, agricultural wood waste, Guayule, and other biomass feedstocks. Natural gas will be used as a supplemental fuel to be utilized only during boiler startup, shutdown, and stabilization.

The project has access to and is contracting for sufficient municipal green waste, agricultural wood waste, Guayule and other feedstock generated in the local area to fuel the project though its projected 30-year lifetime.

The Plan will involve four specific process areas. These process areas include:

- Fuel receiving, handling, storage, and processing;
- Power island, including boiler and steam turbine/generator;
- Ash handling, storage, and shipment; and
- Emergency support equipment.

These process areas will have the potential to emit regulated air pollutants and will be subject to PCAQCD's minor source construction and operating permit requirements.

The Project is subject to the provisions of the PCAQCD's Code of Regulations. These regulations impose specific requirements and standards for stationary sources of air pollutants. In accordance with Chapter 3 of the Code of Regulations, no person shall commence construction of, operate, or make a modification to any source subject to regulation under this chapter, without first obtaining a permit or permit revision from the Control Officer. This application is for a Class I permit. The facility is an affected source as defined under 3-1-030(1) because it is subject to the requirements of Title IV of the Clean Air Act, and is therefore a Class I source, as specified under 3-1-040 (B)(1)(d). The project is located in an area that is currently classified as attainment for all criteria pollutants.

In accordance with PCAQCD requirements, an application requires an explanation of energy inputs, products received and/or handled, products produced, and process of operations. This application includes the following information:

- a site plan, showing buildings, emission points and property lines

- a set of elevation drawings, showing building eave- and maximum-heights, along with the height of any stacks or emission-vents
- a narrative process description
- a set of process flow diagrams; block diagrams, that identify raw material inputs, product or waste withdrawals, and energy inputs, and that also clearly identify emission-generating activities.
- a schedule of primary production equipment/controls; either here, or elsewhere, quantify the production throughput maximum capacity, as well as anticipated "typical" production rates.
- a physical description (height, diameter, elevation, flow rate, outlet temperature) of outlet vents/stacks, as well as relationship to process activity. That is, which processes or emission-generating activities discharge through which stacks/vents.
- a quantification of emissions, documenting

    - emissions at maximum potential without control
    - maximum potential with control, and
    - anticipated actual emissions
- a catalog of MSDS sheets for each raw material or consumable used in the primary production process, as well as any other products used on site that could generate more than 5.5 lbs/day of emissions.

This application provides the following information:

- Completed application forms –Appendix A
- Plant description and operations, including description of the process; description of products; description of alternative operating scenario; flow diagram; and material balance – Section 2
- Site description, including a description of all process and control equipment for which permits are required, stack information, and site diagram – Section 3
- Emissions related information, including types and quantities of all air pollutants to be generated – Section 4
- Citation and description of all applicable requirements, including an explanation of any proposed exemptions from otherwise applicable requirements – Section 5
- Air pollution control information – Section 6
- Compliance requirements and certification – Section 7
- Calculations on which all information is based – Appendix B

The facility will be subject to Title V requirements as there is a potential for annual emissions of CO to be above 100 tons per year. As an electric generating facility with the

potential to generate more than 25 MW, the facility will also be subject to the requirements of the Title IV Acid Rain Program.

The proposed project is a minor source with respect to Prevention of Significant Deterioration (PSD) requirements, and is therefore not subject to Best Available Control Technology (BACT) requirements. Emissions of all criteria pollutants are less than 250 tons per year.

2.0 PROJECT DESCRIPTION

The Project will be located in Pinal County, Arizona, inside the Mariposa City limits in an area zoned Industrial bounded by Cowtown Road as shown on Attachment A. The site consists of approximately 45.3 acres and the current address of the site is 38743 West Cowtown Road. The site is owned by the Project owners, Pinal Power LLC. Figure 1 provides a map of the area showing the location of the project.

2.1 Plant Description and Operations

This section provides a description of the project, including a description of the process and products.

The Pinal Power Project will be a wood-waste biomass energy plant producing 30+ megawatts (MW) of electrical output. It will be fueled primarily by municipal green waste and agricultural wood waste derived from agricultural operations in the area within 30 miles of the plant. The project will consume approximately 260 thousand bone dry tons (BDT) of wood waste annually. The plant will include an automated fuel feed system, boiler feed water treatment, combustor and boiler, steam turbine, condenser, multicone dust collector, ESP, and evaporative cooling tower. It will be interconnected to the grid via a 69kV transmission line terminating at an APS transmission line approximately 13 miles from the project. The net electrical output will be sold under a long-term power purchase agreement.

The project will be located on a level site consisting of 45.3 acres, providing sufficient area to build the facility and to store up to 60 days of fuel onsite. In addition to the electricity generated by the project, the project will sell approximately 150,000 lbs/hour of medium pressure steam to Pinal Energy, a 50 million gallon/year ethanol facility that is located adjacent to the power project.

The project will be located in ED-3's service territory. ED-3 is an electric cooperative that serves the area where the project is located. The project can reach via the ED-3 interconnect and system, four Arizona utilities in addition to the CAISO and LADWP. The interconnect agreement is currently being prepared.

Fuel will be acquired under long term fuel contracts with local agricultural operators supplying high quality wood fuel for the project. Composed primarily of municipal green waste, orchard removals and pruning, Guayule etc., the biomass fuel will be processed and delivered to the plant ready for consumption. As the fuel consumes carbon dioxide throughout its growth, it is considered to be "carbon-neutral" when combusted in an energy production cycle.

Figure 1. Pinal Power Biomass Project Location

Water for boiler and cooling tower make-up will be provided by an on-site well with back-up provided by local water agencies. The project will also treat and pond the project's wastewater stream directly into its own onsite wastewater treatment facility.

The Pinal Power facility will utilize proven equipment provided by experienced suppliers to provide exceptional availability while producing "green" energy. In addition, Pinal Power will employ Best Available Control Technology to insure that the plant will control air emissions while maintaining maximum efficiency. The equipment will include a field-erected water wall boiler incorporating a vibrating grate system with a multi-level over fire air system for low emission combustion. Particulate emissions will be controlled by a multicone dust collector followed by a three (3) zone electro-static precipitator (ESP). NOx emissions will be controlled through the use of selective catalytic reduction (SCR) and selective non-catalytic reduction (SNCR). CO emissions will be controlled with an oxidation catalyst.

The steam produced by the boiler will drive a high-speed axial exhaust steam turbine-generator to produce 30 MW (net) of continuous power. The plant will have a Continuous Emissions Monitoring system (CEM) installed to provide real-time emissions data, which will allow the plant operator to maintain maximum combustion efficiency.

Boiler & Grate

Pinal Power will procure a field-erected water-wall boiler from The McBurney Corporation or equivalent equipment. The boiler will be equipped with a Detroit Stoker vibrating grate allowing precise combustion and emission control in the combustion stage. The boiler will generate 1250 PSIG superheated steam at 950˚F for delivery to the steam turbine generator to achieve the maximum possible efficiency for a wood burning facility. The boiler island will include a steam generator, superheater, airheater and economizer to maximize steam production efficiency.

Flue Gas Emissions Control

The boiler exhaust will be directed through a multicone dust collector to remove approximately 90% of the ash in the flu gas before being directed into a three zone electrostatic precipitator (ESP) to remove approximately 98% of all ash before exhausting to the stack.

In addition, a hybrid Selective Non-Catalytic Reduction (SNCR) / Selective Catalytic Reduction systems being developed by Bay City Boiler and Engineering will be employed to reduce NOx by more than 90%. CO emissions will be controlled using an oxidation catalyst. The ESP and the SCR will be manufactured and installed by PPC Industries, the industry leader in wood-fired boiler emission control with over 80 units installed with capacities ranging from 5,000 acfm to 260,000 acfm.

APS SRP and other utilities will be contacted relative to acquiring the renewable energy and renewable energy credits produced by the Project for a minimum 20-year term starting at commercial operation. Commercial operation is defined as operating at 90% capacity factor for 72 hours and normally must be obtained within thirty-six (36) months from receipt of the land use permit. At maturity the project is expected to operate at a 95% capacity factor.

Wood Waste Fuel

Agricultural clearing of tree products waste represents a high Btu energy source with a heating value of approximately 8,500 Btu/lb (bone dry). As received Btu content will vary due to moisture content which is expected to range from 25-50%, averaging 30%. The plant will be designed to handle moisture contents from 25 to 50% allowing for higher moisture content of the fuel in the winter months. The fuel required by the project represents a relatively small percentage of the wood waste currently available in the area and therefore will not likely be impacted by shortages throughout the life of the project. In addition, the boiler design allows the combustion of other waste biomass fuels commonly available in the region such as in-forest residues and clean urban wood-waste sourced from the Phoenix area. Fuel, in the form of wood chips, will stored in a fuel building prior to being delivered to the boiler feed system. Additional fuel will be maintained in storage piles adjacent to the plant. No railroad ties or other chemically treated wood, or construction & demolition material will be burned in the facility.

A redundant fuel handling system will be constructed using existing equipment designs and customized to meet the particular site requirements. The system will include one or two truck dumpers and a high capacity reclaimer to move the wood fuel from truck delivery to the fuel storage building. Dual independent conveyor systems will move the fuel from the fuel storage building to the boiler fuel metering system. All fuel handling will be enclosed to reduce fugitive dust emissions.

Pinal Power will execute long term (10-year or longer) fuel supply agreements with well-known, well established fuel suppliers for 260 thousand bone dry tons. In addition, urban wood waste is available in the area to supplement Ag waste, should it be necessary.

Supplemental Fuel

The facility will employ clean burning natural gas for supplemental firing during startup. The start-up process fires the boiler with natural gas to preheat the boiler prior to normal fuel feed initiation, to maintain emission control. A natural gas supply line is located on the property with sufficient capacity to supply the plant during these operations. Pipeline quality natural gas will be supplied from the pipeline with a sulfur concentration of less than 5 grains per 100 dry standard cubic feet based on FERC tariffs from the supplier.

Operations

The plant will be operated by employees of Pinal Power managed by an experienced biomass plant manager under the direct supervision of Pinal Power, whose principals have many years of plant operating and maintenance experience. Bay City Boiler will assist with maintenance services as necessary to the Pinal Power Facility to ensure the Facility attains the highest levels of short and long-term availability. With Pinal Power providing operations and maintenance services, this Facility will have an expected life of over 30 years.

2.2 Alternative Operating Scenarios

As discussed above, the facility will employ clean burning natural gas for supplemental firing during startups, shutdowns, and when required to provide supplemental fuel. The boiler may operate initially on natural gas. It is anticipated that startups and shutdowns would require no more than 24 hours of operation on natural gas.

An alternative operating scenario may involve the use of natural gas during upset conditions if the plant is required to provide electricity to the grid through contract requirements. In this event, emissions would not exceed the annual emission limitations for operation on biomass fuels.

2.3 Process Flow Diagrams and Mass Balance

Figure 2 provides a process flow diagram for the Pinal Power Project.

Figure 3 provides a mass and heat balance diagram for the project.

Pinal Power, LLC Biomass Facility
Plant Flow Sheet and Design Information

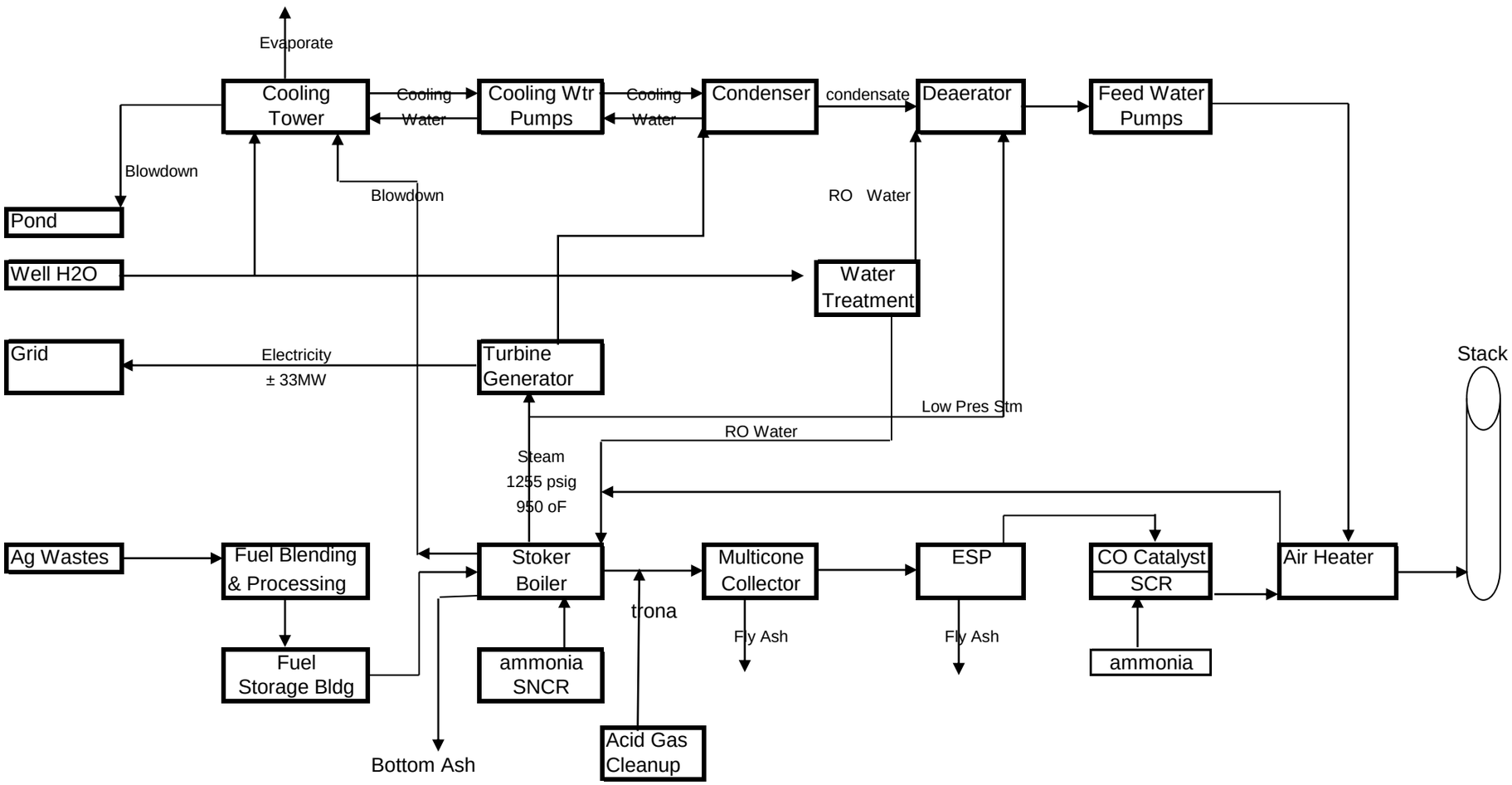

CONFIDENTIAL **<u>Pinal Power Process Flow Sheet</u>** **CONFIDENTIAL**

CONFIDENTIAL INFORMATION

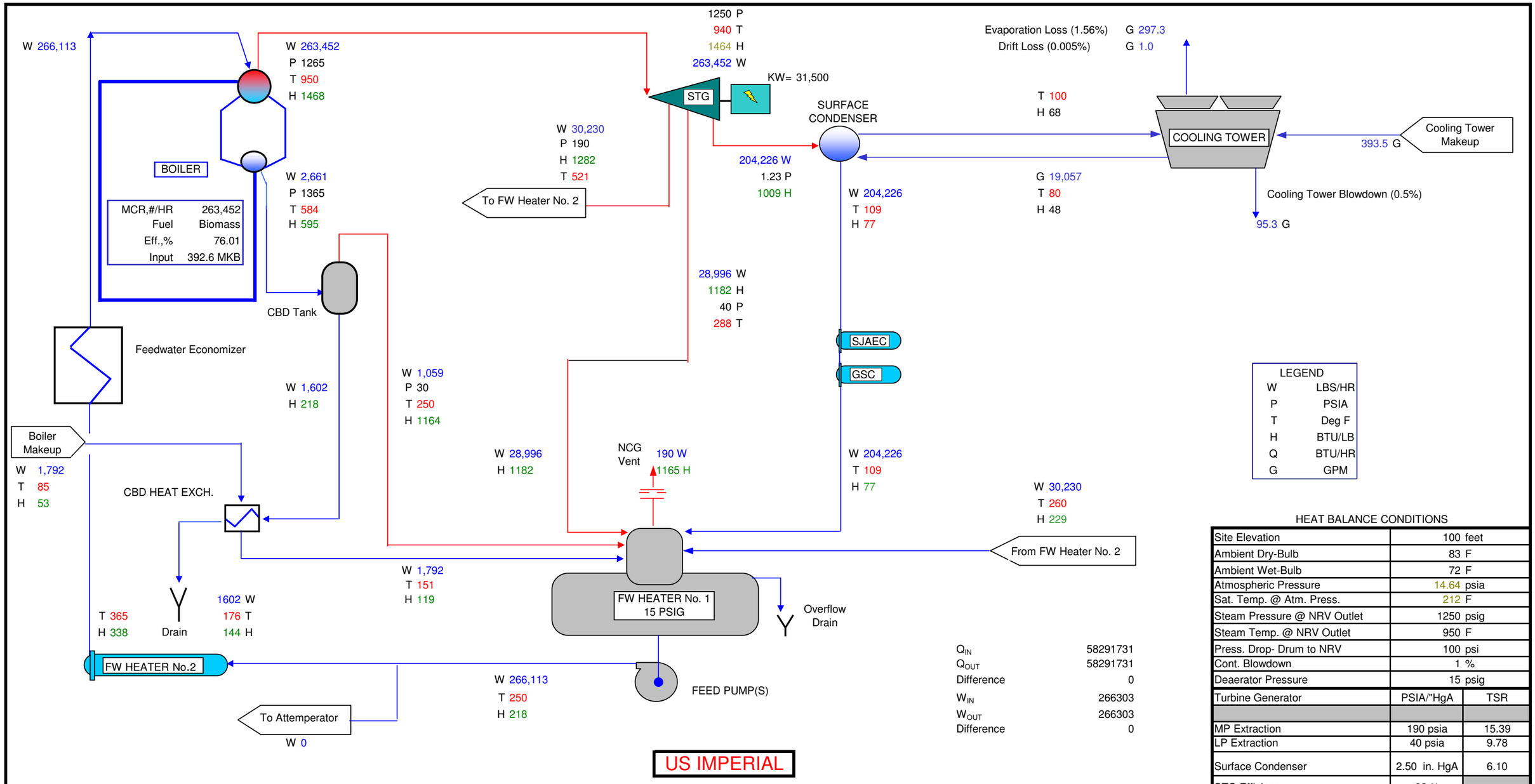

Q_{IN}	58291731
Q_{OUT}	58291731
Difference	0
W_{IN}	266303
W_{OUT}	266303
Difference	0

HEAT BALANCE CONDITIONS

Site Elevation	100 feet	
Ambient Dry-Bulb	83 F	
Ambient Wet-Bulb	72 F	
Atmospheric Pressure	14.64 psia	
Sat. Temp. @ Atm. Press.	212 F	
Steam Pressure @ NRV Outlet	1250 psig	
Steam Temp. @ NRV Outlet	950 F	
Press. Drop- Drum to NRV	100 psi	
Cont. Blowdown	1 %	
Deaerator Pressure	15 psig	
Turbine Generator	PSIA/"HgA	TSR
MP Extraction	190 psia	15.39
LP Extraction	40 psia	9.78
Surface Condenser	2.50 in. HgA	6.10
STG Efficiency	82 %	

No.	DRWN	CHKD	APPVD	DATE	REVISION DESCRIPTION
A	EHM			8/11/09	For Information

Bay City Boiler for:
Valley Bio-Energy LLC
Modesto, California

McBurney

HEAT & MASS BALANCE DIAGRAM
OPERATING CASE: MAXIMUM FUEL/SUMMER DESIGN
HP FEEDWATER HEATER

Project No.	P09-059
Dwg. No.	1081 Rev. A
Date	8/11/2009

3.0 SITE DESCRIPTION

This section of the application provides a description of the Pinal Power Project site, including a description of all process and control equipment for which permits are required, stack information, and site diagram.

3.1 Process and Control Equipment

Process equipment that requires a permit includes the biomass boiler, which is the main stationary source at the site. Fugitive sources associated with the project include fuel and ash handling processes.

Pinal Power will procure a field-erected water-wall boiler from The McBurney Corporation or equivalent equipment. McBurney has significant biomass experience and has installed similar boilers for Sierra Pacific Industries at its Aberdeen, Lincoln, and Burlington facilities. The boiler will be equipped with a Detroit Stoker vibrating grate allowing precise combustion and emission control in the combustion stage. The boiler will generate 1250 PSIG superheated steam at 950˚F for delivery to the steam turbine generator to achieve the maximum possible efficiency for a wood burning facility. The boiler island will include a steam generator, superheater, airheater and economizer to maximize steam production efficiency. Figure 4 provides a diagram of the boiler configuration.

As stated above, the boiler exhaust is directed through a multicone dust collector to remove approximately 90% of the ash in the flu gas before being directed into a three zone electrostatic precipitator (ESP) to remove approximately 98% of all ash before exhausting to the stack. All bottom ash and fly ash will be stored on-site in enclosed containers prior to off-site disposal. The fly ash is a product with application in several commodity markets including agricultural applications.

To control emissions of NOx, a hybrid Selective Non-Catalytic Reduction (SNCR) / Selective Catalytic Reduction systems being developed by Bay City Boiler and Engineering will be employed to reduce NOx by more than 90%. The SCR will utilize ammonia injection and a catalyst to reduce emissions of NOx. Ammonia slip from the SCR will be limited to 20 ppm.

The ESP and the SCR will be manufactured and installed by PPC Industries, the industry leader in wood-fired boiler emission control with over 80 units installed with capacities ranging from 5,000 acfm to 260,000 acfm.

CO and VOC emissions will be controlled using an oxidation catalyst. The oxidation catalyst will control emissions by at least 30%, and will employ a passive catalyst system.

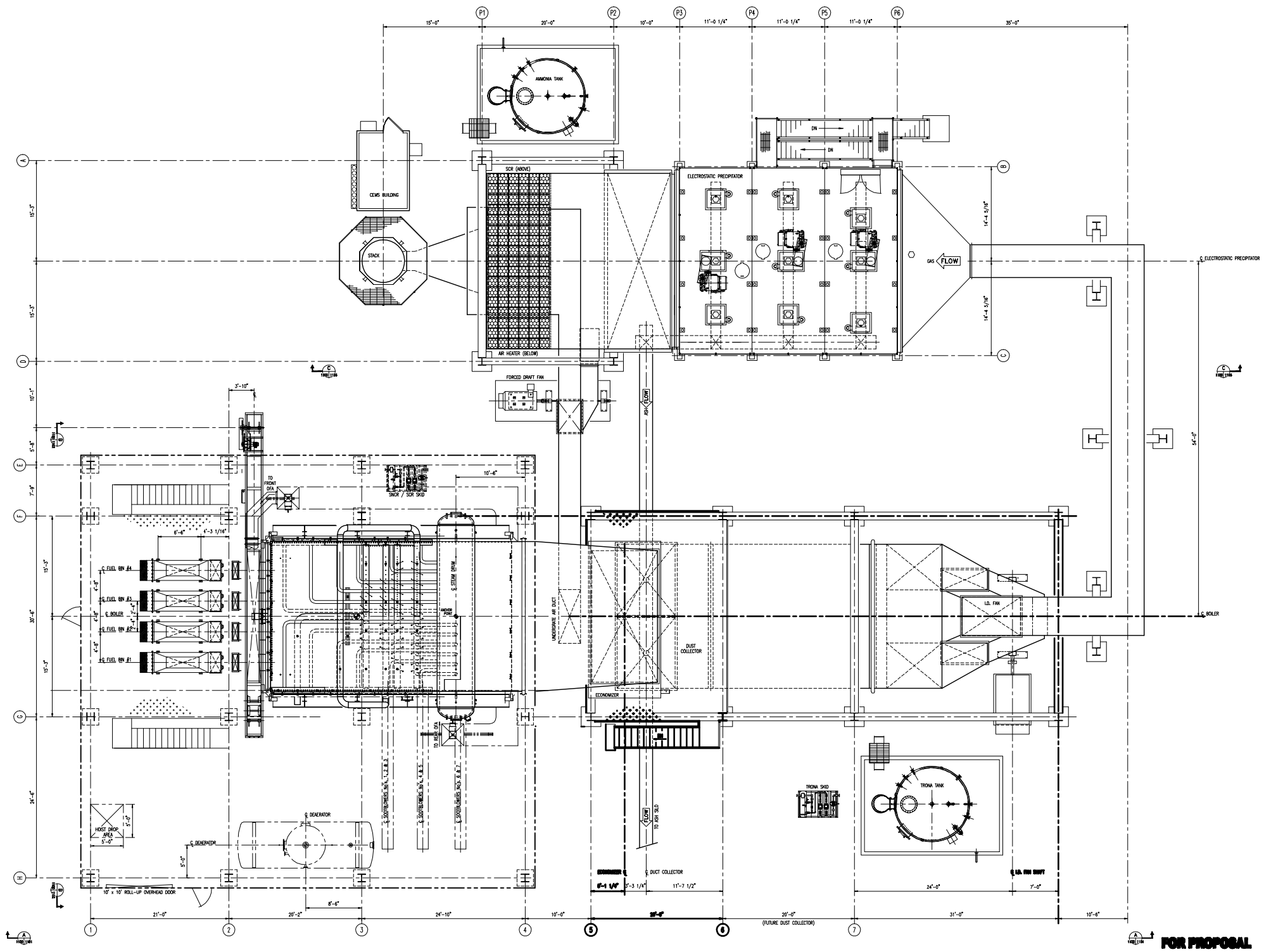

OVERALL PLAN VIEW

FOR PROPOSAL

NO.	DRWN.	CHKD.	APPVD.	DATE	REVISION DESCRIPTION
A	PSB	RCG		28DEC05	RELEASED FOR PROPOSAL.

NO.	DRWN.	CHKD.	APPVD.	DATE	REVISION DESCRIPTION

© COPYRIGHT 2004, ALL RIGHTS RESERVED. THE McBURNEY CORPORATION, PROTECTED PURSUANT TO U.S. AND INTERNATIONAL COPYRIGHT LAWS. THIS DOCUMENT IS LICENSED ONLY FOR THE PERFORMANCE OF McBURNEY CORPORATION WORK. ANY REPRODUCTION OR DUPLICATION IN WHOLE OR PART IS EXPRESSLY FORBIDDEN. UNAUTHORIZED USE, REPRODUCTION, OR DUPLICATION WILL BE PROSECUTED IN ACCORDANCE WITH APPLICABLE LAWS.

CAD FILE NAME: p09-128_1100_A
DRAWING SCALE: 1/8"=1'-0"

BAY CITY BOILER & ENGINEERING CO., INC.
330,000 PPH WOOD FIRED BOILER
PHOENIX, ARIZONA

McBurney®

GENERAL ARRANGEMENT
OVERALL PLAN VIEW

PROJECT NO. P09-128
DWG. NO. 1100
REV. A

3.2 Stack Information

The main emission point for the Pinal Power Biomass Facility will be the boiler stack. The boiler stack will be 120 feet from the foundation, which is proposed to be constructed approximately 3 feet above grade. Stack parameters are shown below:

Stack Height:	120 feet
Stack Diameter:	96 inches
Stack Exit Temperature:	350° F
Stack Flow Rate:	34,667 ACFM

The stack coordinates are 408223.29 UTMW, 3653320.57 UTMN (NAD 83, UTM Zone 12).

Additional fugitive dust sources on the site include the bulldozing of fuel, storage piles of biomass fuel, fuel handling (conveyors and storage), and ash handling. These sources are not point sources.

3.3 Site Diagram

Figure 5 provides a site diagram for the Pinal Power Facility.

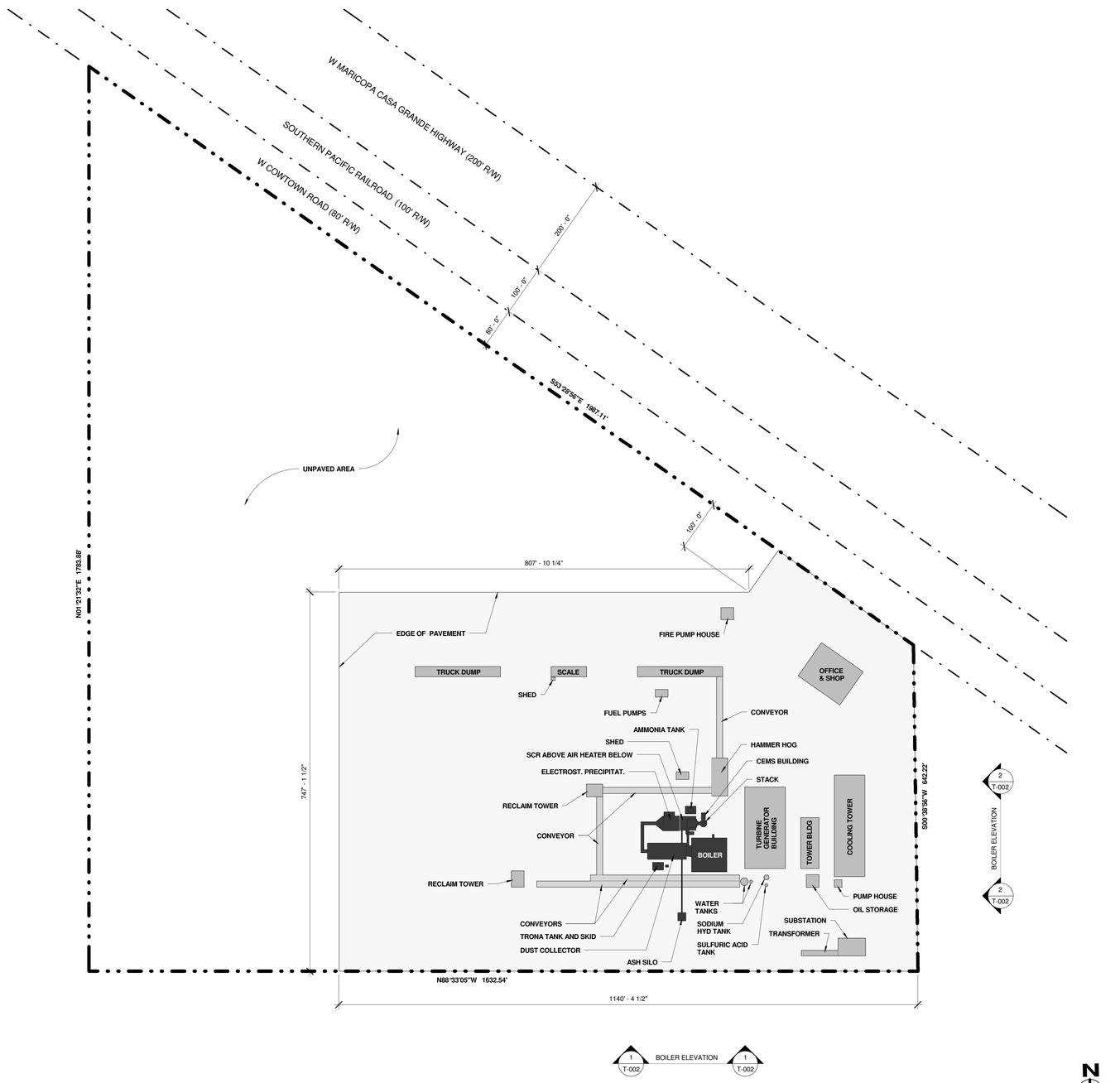

1 **Site Plan**
1" = 100'-0"

VICINITY MAP

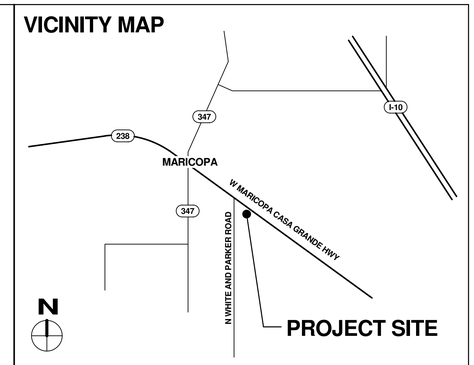

PROJECT SCOPE

The Pinal Power Project will be a biomass energy plant producing 30+ megawatts (MW) of electrical output, and will be capable of supplying electricity to over 35,000 homes using renewable energy. It will be fueled using green and wood waste derived primarily from municipal and agricultural operations within 30 miles of the plant. The project will consume approximately 260,000 bone-dry tons (BDT) of wood waste annually. The presence of power plant operations will result in the reduction of transportation emissions by reducing the need to move wood and green waste over longer distances for other types of disposal.

It is anticipated that during the planning and development stages of the project, 6-8 private consultants in and around Pinal and Maricopa counties will be engaged for various professional and other services. During the two-year construction phase, the project will generate approximately 130-150 full time jobs. Once the project is running, plant operations will employ 28-30 people in full time positions, with an additional 110 full time ancillary jobs anticipated for such needs as trucking, maintenance, and fuel management.
Pinal Power will incorporate modern technologies to cleanly combust renewable fuel per air permitting guidelines. The plant will include an automated fuel feed system, boiler feed water treatment, combustor and boiler, steam turbine, condenser, multicone dust collector, electro-static precipitator, and evaporative cooling tower. It will be interconnected to the electrical grid via a 69kV transmission line terminating at an APS transmission line approximately 13 miles from the project. The net electrical output will be sold under a long-term power purchase agreement.

The Project will be located in Pinal County, Arizona, inside the Maricopa City limits in an industrially zoned area bounded by Cowtown Road as shown on the attached site layout plan. The site consists of approximately 45.3 acres and the current address of the site is 38743 West Cowtown Road. The site is owned by the Project owner, Pinal Power LLC.

LEGAL DESCRIPTION

LOT 3
A parcel of ground located in and being a portion of the south half of Section 6, Township 5 south, Range 4 east of the Gila and Salt River Base and Meridian, Pinal County, Arizona and being more particularly described as follows:
Beginning at the southeast corner of said Section 6;
thence N88°33'05"W, 1131.98 ft along the section line between Sections 6 and 7 of said township and range to the true point of beginning;
thence continuing along said section line N88°33'05"W, 1549.54 ft to the quarter corner between said Sections 6 and 7;
thence continuing along said section line N88°33'05"W, 83 ft;
thence leaving said section line N01°21'32"E, 1783.89 ft to a point on the southerly boundary of the Southern Pacific Railroad right-of-way;
thence S53°28'56"E, 1987.11 ft along said railroad right-of-way;
thence S00°38'56"W, 642.22 ft to the true point of beginning and containing 45.3 acres.

PROPERTY INFORMATION

PROJECT NAME:
Pinal Power, LLC
Applicant's name & affiliation with the project:
Pinal Power LLC, Owner
Applicant's mailing address and phone:
13835 N Tatum Blvd Suite 9-412 Phoenix, AZ 85032
(602) 595-4507
Primary Contact's name and affiliation with the project:
Hal Mitchell, Project Primary Contact
Primary Contact's phone:
(858) 602-6332

Property Owner's Name:
Pinal Power LLC, Owner
Property Owner's mailing address, phone, and fax:
13835 N Tatum Blvd Suite 9-412 Phoenix, AZ 85032
Property Address:
38743 W Cowtown Road, Maricopa AZ 85238
Property Assessor's Parcel Number:
502-42-003A2
Property general location:
Adjacent (west) of Pinal Energy (ethanol) plant on W. Cowtown Road, Maricopa AZ

General Plan Classification:
CI-2 Industrial
Description of proposed land use:
30 megawatt biomass fueled power generation facility.
Acreage:
45.3 acre single parcel lot + or -
Existing Land Use:
Hay storage
FEMA information:
The lot is in the Santa Rosa Wash flood plane, Zone A, and the project will require a Flood Plane Use Permit
Water supply proposal description:
Leased water rights from Pinal Feeding and others
Sewage disposal proposal description:
No connection will be made to the municipal sewer system. Septic and ponding permit will be needed
Surface drainage proposal description:
Storm water and drainage management plan will be submitted
Industrial Use:
Biomass fueled electric power generation facility.
FAA Information:
The project will comply with any applicable FAA requirements.

PINAL POWER LLC

All ideas, designs, and arrangements on these drawings are the propoerty of PINAL POWER LLC, and are intended for this specific project only. They shall not be used for any other purpose without express written consent from PINAL POWER LLC. There shall be no deviations or changes from these drawings without express written consent from PINAL POWER LLC. The information on these drawings is copyrighted material, and all rights are reserved.

Pinal Power Plant
38743 W Cowtown Road
Maricopa, AZ 85238

No.	Description	Date

Project number	10006
Drawn by	TVS
Checked by	DCP
Approved by	-
Date Issued	-

T-001
Title Sheet

3/25/2010 9:55:26 AM

4.0 PROJECT EMISSIONS EVALUATION

This section of the Application for Authority to Construct presents a description of the project's emission sources and the proposed emission limits for the project.

4.1 Emission Sources

The main emission source associated with the Pinal Power biomass project is the biomass-fueled boiler. Pinal Power is proposing to install a water-wall boiler from The McBurney Corporation or equivalent equipment. The boiler will be equipped with a Detroit Stoker vibrating grate allowing precise combustion and emission control in the combustion stage. The boiler will generate 1250 PSIG superheated steam at 950˚F for delivery to the steam turbine generator to achieve the maximum possible efficiency for a wood burning facility. The boiler island will include a steam generator, superheater, airheater and economizer to maximize steam production efficiency.

The boiler will be equipped to utilize natural gas for supplemental firing during startup. The start-up process fires the boiler with natural gas to preheat the boiler prior to normal fuel feed initiation, to maintain emission control. A natural gas supply line is located on the property with sufficient capacity to supply the plant during these operations.

In addition to emissions from the boiler, other emission sources on site include particulate emissions from fuel handling and fly ash handling.

4.2 Boiler Emissions

The boiler will be a source of emissions of criteria pollutants regulated under PCAQCD Code of Regulations, Chapter 2, and hazardous air pollutants, regulated under PCAQMC Code of Regulations, Chapter 7. The following sections present emission estimates for the boiler.

4.2.1 Criteria Pollutant Emissions

Table 4-1 presents a summary of the proposed emission limitations and permit conditions for the boiler. The boiler will meet emission limits set forth in Table 4-1.

Table 4-1
PROPOSED BIOMASS BOILER EMISSION LIMITS

Pollutant	Emission Limits[1]			Proposed Control Technology
	(lb/MMBtu)	(lb/day)	(tons/year)	
NO_X	0.060	578.88	105.6	SNCR and SCR
CO	0.084	810.43	147.90	Oxidation Catalyst
SO_2	0.025	241.20	44.02	Low-Sulfur Fuel
PM_{10}	0.020	192.96	35.21	Electrostatic Precipitator
VOC	0.010	96.48	17.61	Oxidation Catalyst

[1] Emission limits are based on a 24-hour block average, and would not apply during startup and shutdown

Assumptions regarding operation of the biomass boiler are presented below.

- Maximum heat input capacity is 402 MMBtu/hr
- Facility may operate 8,760 hours per year
- Biomass fuel F-factor is 9,240 dscf/MMBtu @ 68°F
- Biomass fuel heat content is 8,200 Btu/lb (bone dry, higher heating value)
- Heating value of natural gas is 1,020 Btu/scf
- Proposed emission control technology is implemented:
  - SNCR and SCR for NO_X control
  - Multiclone dust collector followed by ESP for PM control
  - Oxidation catalyst for CO and VOC control
  - Dry powder (trona) injection for SO_2 and HCl control
- Ammonia slip is limited to 20 ppmvd at 12 percent CO_2
- Boiler emissions during startup and shutdown are included in the annual emissions estimates; startup/ shutdown cycles are limited to no more than 12 per year and the duration is limited to less than 12 hours.

Emissions associated with initial boiler commissioning and testing, and with periodic startups and shutdowns, will be included within the annual facility emissions shown in Table 4-1.

4.2.2 Hazardous Air Pollutant Emissions

Table 4-2 presents a summary of the HAP emissions based on the annual fuel usage for the boiler. Emissions of HAPS were calculated using either emission factors from AP-42, or emission factor for wood-fired boiler form the MACT database test data.

Table 4-2
Hazardous Air Pollutant Emissions

Hazardous Air Pollutant	Emission Factor, lb/MMBTU	Source	Emissions, lbs/hr	Emissions, tons/year
Acetaldehyde	4.71E-05	MACT Test	1.89E-02	8.29E-02
Acetophenone	3.20E-09	AP-42	1.29E-06	5.63E-06
Acrolein	9.78E-06	MACT Test	3.93E-03	1.72E-02
Benzene	1.11E-05	MACT Test	4.46E-03	1.95E-02
bix-(2-Ethylhexyl phthalate)	4.70E-08	AP-42	1.89E-05	8.28E-05
2-Butanone	5.40E-06	AP-42	2.17E-03	9.51E-03
Carbon tetrachloride	4.23E-06	MACT Test	1.70E-03	7.45E-03
Chlorine	2.80E-04	MACT Test	1.13E-01	4.93E-01
Chlorobenzene	7.54E-06	MACT Test	3.03E-03	1.33E-02
Chloroform	5.13E-06	MACT Test	2.06E-03	9.03E-03
2,4-Dinitrophenol	3.65E-05	MACT Test	1.47E-02	6.43E-02
Ethylbenzene	5.73E-07	MACT Test	2.30E-04	1.01E-03
Formaldehyde	1.77E-04	MACT Test	7.12E-02	3.12E-01
Hydrogen Chloride	1.90E-02	AP-42	7.64E+00	6.69E+00
Naphthalene	9.70E-05	MACT Test	3.90E-02	1.71E-01
4-Nitrophenol	3.50E-05	MACT Test	1.41E-02	6.16E-02
Pentachlorophenol	2.16E-07	MACT Test	8.68E-05	3.80E-04
Phenol	4.18E-05	MACT Test	1.68E-02	7.36E-02
Propionaldehyde	6.11E-05	MACT Test	2.46E-02	1.08E-01
Styrene	5.60E-07	MACT Test	2.25E-04	9.86E-04
Tetrachloroethene	5.41E-06	MACT Test	2.17E-03	9.53E-03
Toluene	4.60E-06	MACT Test	1.85E-03	8.10E-03
Trichloroethene	3.00E-05	MACT Test	1.21E-02	5.28E-02
2,4,6-Trichlorophenol	2.16E-07	MACT Test	8.68E-05	3.80E-04
Vinyl Chloride	3.13E-06	MACT Test	1.26E-03	5.51E-03
Xylene	4.06E-06	MACT Test	1.63E-03	7.15E-03
Total HAPs, tons/year				**8.22**
PAHs				
Acenaphthene	9.10E-07	AP-42	3.66E-04	1.60E-03
Acenathphylene	5.00E-06	AP-42	2.01E-03	8.80E-03
Anthracene	3.00E-06	AP-42	1.21E-03	5.28E-03
Benzo(a)anthracene	6.50E-08	AP-42	2.61E-05	1.14E-04
Benzo(a)pyrene	2.60E-06	AP-42	1.05E-03	4.58E-03
Benzo(b)fluoranthene	1.00E-07	AP-42	4.02E-05	1.76E-04
Benzo(e)pyrene	2.60E-09	AP-42	1.05E-06	4.58E-06
Benzo(g,h,i)perylene	9.30E-08	AP-42	3.74E-05	1.64E-04
Benzo(j,k)fluroanthene	1.60E-07	AP-42	6.43E-05	2.82E-04
Benzo(k)fluoranthene	3.60E-08	AP-42	1.45E-05	6.34E-05
Chyrsene	3.80E-08	AP-42	1.53E-05	6.69E-05
Dibenzo(a,h)anthracene	9.10E-09	AP-42	3.66E-06	1.60E-05
Fluoranthene	1.60E-06	AP-42	6.43E-04	2.82E-03
Fluorene	3.40E-06	AP-42	1.37E-03	5.99E-03
Perylene	5.20E-10	AP-42	2.09E-07	9.16E-07

Table 4-2 (continued)
Hazardous Air Pollutant Emissions

Hazardous Air Pollutant	Emission Factor, lb/MMBTU	Source	Emissions, lbs/hr	Emissions, tons/year
Phenanthrene	7.00E-06	AP-42	2.81E-03	1.23E-02
Pyrene	3.60E-06	AP-42	1.45E-03	6.34E-03
Total PAHs				**4.86E-02**
Dioxins/Furans				
Tetrachlorodibenzo-p-dioxins	8.60E-12	AP-42	3.46E-09	1.51E-08
Total Dioxins/Furans				**7.62E-02**
Total HAPs with PAHs and Dioxins/Furans, tons/year				**8.34**

As shown in Table 4-2, the boiler would not be a major source of HAPs because it would not emit more than 25 tons per year of combined HAPs, and would not emit more than 10 tons per year of any single HAP. The boiler would therefore not trigger the requirements of Maximum Achievable Control Techology (MACT) for HAPs.

4.3 Fuel Receiving, Handling, Storage, and Processing Area

The fuel receiving, handling, storage and processing area will be designed to accommodate biomass feedstocks as received at the facility. It should be noted that the equipment type and locations are being provided for information purposes only and are subject to change pending final engineering.

Biomass will be brought to the site in covered trucks. The trucks will use the main entrance to the facility from Cowtown Road and will proceed to the scale station for weighing. The trucks will then proceed to the truck dumping stations where the contents of the truck will be emptied into truck dumpers. The system will include one or two truck dumpers and a high capacity reclaimer to move the wood fuel from truck delivery to the fuel storage building. Dual independent conveyor systems will move the fuel from the fuel storage building to the boiler fuel metering system. All fuel handling will be enclosed to reduce fugitive dust emissions.

The plant will be designed to handle moisture contents from 25 to 50% allowing for higher moisture content of the fuel in the winter months. Fuel will stored in a fuel building prior to being delivered to the boiler feed system. Additional fuel will be maintained in storage piles adjacent to the plant. Enclosed conveyor systems will be utilized to transfer materials to and from the storage areas and to the boiler building for combustion in the boiler.

Within the Fuel Receiving, Handling, Storage, and Processing Area will be an enclosed hog and screen, reclaim towers, and conveyors.

This operations has the potential for emissions of particulate matter (PM), including regulated pollutants PM_{10} and $PM_{2.5}$. Conveyors and drop points associated with this process area will be enclosed to the extent physically possible. Pile drop points cannot be enclosed; however, because of the moisture content of the biomass, fugitive dust associated with fuel handling should be minimized.

Emission estimates are calculated based on emission factors from the U.S. EPA's *Compilation of Air Pollutant Emission Factors* (AP-42), for similar processes involving materials handling. Details of the emission calculations are provided in Appendix B.

Table 4-3 provides a list of equipment, including material transfer rates. As discussed above, all conveyors will be enclosed and conveyor drop point will be enclosed where physically possible. Conveyor drop points to storage piles will not be enclosed but will be designed to minimize excessive dust formation.

Table 4-3
Fuel Receiving, Handling, Storage, and Processing Equipment

Process	**Maximum Hourly Emissions, lbs/hr**		**Annual Emissions, tons/year**	
	PM_{10}	**$PM_{2.5}$**	**PM_{10}**	**$PM_{2.5}$**
Dozer Use – Biomass Fuel Receiving and Handling	0.001999	0.00028	0.008755	0.001226
Storage Pile Erosion	-	-	0.3504	0.0526
Fuel Handling	0.158	0.0239	0.223	0.0337
Total	**0.16**	**0.024**	**0.582**	**0.088**

Operational procedures to minimize spontaneous combustion from storage of the woody biomass materials are being incorporated into the final design of the project. These procedures include the following:

1. Incoming unprocessed materials will be stored in areas with a clearance between each storage area.
2. Mixing of materials will be performed at the site. However, placing new materials on top of older material piles and not utilizing older materials will not be practiced at the site.
3. Storage sites shall be level and on firm ground to avoid possible leaching of the pile materials to the subsurface.
4. Concentrations of fine materials during pile build-up will be minimized.
5. Pile compaction will be minimized.

Due to the nature of the project, it is anticipated that fuels will not be stored at the site longer than 60 days on average.

4.4 Ash Handling, Storage, and Shipment Area

The combustion of biomass in the proposed boiler will result in the formation of bottom ash and fly ash. The resultant amount of ash is determined by the type of fuel. Bottom ash will be in the form of large solid particles and will be removed from the boiler and stored in a metal container for future removal off site. The fly ash is composed of particulates that are captured by the cyclone and electrostatic precipitator. An enclosed conveyor or similar system will be used to transport the fly ash from the baghouse to the fly ash storage silo. The storage silo will be equipped with a small baghouse to control emissions of particulate matter.

The conveyors and drop points associated with ash handling will be enclosed. The number of drop points has been estimated based on similar facility design. Emission estimates have been performed for drop points since they represent the greatest potential to emit particulate matter. Emissions are summarized in Table 4-4, and calculations are provided in Appendix B.

Table 4-4
Ash Handling and Storage

Process	Maximum Hourly Emissions, lbs/hr		Annual Emissions, tons/year	
	PM_{10}	$PM_{2.5}$	PM_{10}	$PM_{2.5}$
Fly Ash Handling	0.164	0.0249	0.719	0.109
Total	**0.164**	**0.0249**	**0.719**	**0.109**

5.0 REGULATORY ANALYSIS

This section presents an evaluation of the regulations that apply to the Pinal Power Biomass Plant.

5.1 Federal Air Quality Regulations

Air quality is regulated by the U.S. EPA under the Federal Clean Air Act of 1970, 40 USC 7401 et seq. as amended in 1977 and 1990. Following the Clean Air Act Amendments of 1990, the Clean Air Act is divided into sections that cover the following general topics:

- Title I – Air Pollution Prevention and Control
  - Part A – Air Quality and Emission Limitations
  - Part B – Ozone Protection (Replaced by Title VI)
  - Part C – Prevention of Significant Deterioration of Air Quality
  - Part D – Plan Requirements for Nonattainment Areas
- Title II – Emission Standards for Mobile Sources
  - Part A – Motor Vehicle Emission and Fuel Standards
  - Part B – Aircraft Emission Standards
  - Part C – Clean Fuel Vehicles
- Title III – General
- Title IV – Acid Deposition Control
- Title V – Federal Operating Permits
- Title VI – Stratospheric Ozone Protection

The following subsections describe the specific Clean Air Act regulations that apply to the Pinal Power Biomass Project.

5.1.1 New Source Review

Minor New Source Review (NSR) is for pollutants from stationary sources that do not require Prevention of Significant Deterioration (PSD) or nonattainment NSR permits. Pinal County is currently designated as an attainment area for all criteria pollutants under the Clean Air Act; however, the area has been proposed for redesignation as a PM_{10} nonattainment area.

The purpose of minor NSR permits is to prevent the construction of sources that would interfere with attainment or maintenance of a National Ambient Air Quality Standard (NAAQS) or violate the control strategy in nonattainment areas. Also, minor NSR permits often contain permit conditions to limit the sources emissions to avoid PSD or nonattainment NSR.

Because the Pinal Power Biomass Plant will utilize emission controls to remain below the PSD emission levels, the project is subject to the requirements of minor New Source Review. The project will therefore be subject to NSR requirements for non-major sources, and must obtain a preconstruction permit under NSR.

5.1.2 New Source Performance Standards

New Source Performance Standards (NSPS) apply to new sources in designated source categories as established in 40 CFR §60. NSPS provide specific emission limitations for new sources in the established categories. The standards applicable to the proposed project include the following:

- NSPS Subpart A – General Provisions
- NSPS Subpart Db – Industrial, Commercial, Institutional Steam Generating Units

5.1.2.1 NSPS Subpart A – General Provisions

This part of the New Source Performance Standards provides general provisions of the regulation, including definitions and a listing of applicable subparts.

5.1.2.2 NSPS Subpart Db – Standards of Performance for Industrial-Commercial-Institutional Steam Generating Units

40 CFR Part 60.40b(a) applies to any industrial, commercial, or institutional steam generating unit that commences construction, modification, or reconstruction after June 19, 1984, and that has a heat input capacity from fuels combusted in the steam generating unit of greater than 29 megawatts (MW) (100 million British thermal units per hour (MMBtu/hr)). The proposed boiler will utilize two 62.5 MMBTU burners that will have a burner design heat input rate of no more than 125 MMBtu/hr when combusting natural gas. The proposed boiler will also be capable of combusting wood at an estimated maximum design heat input rate of 402 MMBtu/hr. Based on the fuels to be combusted and maximum heat inputs, the proposed boiler will meet the applicability requirements of NSPS Db. The following Subpart Db requirements are applicable to the proposed boiler:

Emission Limitations

- SO_2: Units firing gaseous fuels, or a mixture of gaseous fuel with other fuels with a potential SO_2 emission rate of 0.32 lbs/MMBtu heat input or less, are exempt from the SO_2 emission limit of 0.2 lbs/MMBtu (40 CFR 60.42b(k)(2)). The proposed boiler will achieve an SO_2 rate of less than 0.32 lbs/MMBtu, thus will satisfy the exemption criteria.

- PM: (Filterable portion only) shall not exceed 0.030 lb/MMBtu (13 ng/J) as stipulated in 60.43b(h)(1), except during periods of startup, shutdown or malfunction as provided by 40 CFR 60.2, 60.11(c), 60.43b(g) and 60.46b(a). The proposed boiler will achieve a PM rate of 0.0075 lbs/MMBTU, and will thus meet the requirements of 40 CFR Part 60, Subpart Db.

- Opacity: 20% (6-minute average), except for one 6-minute period per hour of not more than 27% opacity pursuant to 40 CFR 60.43b(f). This standard shall apply at all times, except during periods of startup, shutdown or malfunction as provided by 40 CFR 60.2, 60.11(c), 60.43b(g) and 60.46b(a). The proposed boiler will achieve 20% opacity through good combustion practices and utilization of a baghouse.

- NOx: 0.30 lbs/MMBtu (130 ng/J) heat input on a 30-day rolling average, pursuant to 40 CFR 60.44b(d). This section applies if the project will simultaneously combust natural gas with wood, unless the annual capacity factor for natural gas is limited through an enforceable permit limitation of 10% or less. The proposed boiler will only combust natural gas for startup, shutdown and bed stabilization and woody biomass. Pinal Power, LLC is not proposing to take a limitation to restrict natural gas to an annual capacity factor of 10 percent (0.10) or less. During combustion of woody biomass, natural gas may also be cofired as the boiler goes through startup, shutdown and bed stabilization modes. Subsequently, the 0.30 lbs/MMBtu NOx limit has been determined to apply. The boiler design in conjunction with either an SCR or SNCR system will achieve this NOx limitation.

5.1.3 National Emission Standards for Hazardous Air Pollutants

National Emission Standards for Hazardous Air Pollutants (NESHAPS) apply to emissions of hazardous air pollutants (HAPs) from existing and new sources. In 40 CFR §61 the EPA set forth emission standards for specific source categories. The Pinal Power Biomass facility is not in any of the source categories regulated by 40 CFR §61. 40 CFR §63 sets forth additional standards for major sources of HAPs. Under the requirements of 40 CFR §63, sources that emit 10 tons per year of any single HAP, or 25 tons per year of total HAPs, are classified as major sources of HAPs. As discussed in Section 2.3, the project is not a major source of HAPs and is therefore not subject to any of the source-specific requirements of 40 CFR §63.

5.1.4 Acid Rain Provisions

The USEPA's Acid Rain Program goal is to reduce the amount of acid precursor emissions released into the atmosphere from power plants. Oxides of nitrogen and sulfur dioxides are regulated under the Acid Rain Program. To achieve the goal of reducing emissions at the lowest cost to society, the program employs both traditional and innovative, market-based approaches for controlling air pollution. In addition, the

program encourages energy efficiency and pollution prevention. The USEPA has set a limit on the amount of sulfur dioxide emissions and the emission rate of oxides of nitrogen for all regulated power plants. The requirements of this program have been established in 40 CFR Parts 72 through 78.

Power plants that sell more than one-third of their potential electric generation capacity to any utility power distribution system, and are greater than 25 MW, are subject to the Acid Rain Provision. Under this program, each utility unit must continuously measure and record its emissions of SO_2, NOx, and CO_2 as well as volumetric flow and opacity. A continuous emission monitoring system (CEMS) must be used. Pinal Power will monitor emissions with a CEMS that is certified to comply with the requirements of the Acid Rain Program, and will submit an Acid Rain application under separate cover.

Pinal Power will appoint a Designated Representative to represent the owners and operators of the proposed biomass plant project in all matters relating to the holding and disposal of allowances for the affected unit. This representative will file the acid rain permit application and compliance plan.

5.1.5 Federal Operating Permit

As set forth in 40 CFR Part 71, major sources of regulated pollutants require a Federal Operating Permit. The Federal Operating Permit requirement applies to all sources that are classified as "major" under the definitions of 40 CFR Part 71. Also, all facilities subject to the federal Acid Rain Program are required to obtain a Federal Operating Permit. Accordingly, this application serves as an application for the Title V Operating Permit.

5.1.6 Compliance Assurance Monitoring

Pursuant to requirements concerning enhanced monitoring and compliance certification under the Clean Air Act, EPA has promulgated regulations (40 CFR Part 64) to implement compliance assurance monitoring (CAM) for major stationary sources of air pollution that are required to obtain operating permits under Title V of the act. The regulations require owners or operators of such sources to conduct monitoring that satisfies particular criteria established in the rule to provide a reasonable assurance of compliance with applicable requirements under the act. Monitoring focuses on emissions units that rely on pollution control device equipment to achieve compliance with applicable standards. The effective date of this rule was November 21, 2007.

CAM Applicability

For a source to be subject to the CAM regulations, the pollutant-specific emission unit (PSEU) must meet all of the following criteria. Please note that the term "PSEU" means an emissions unit considered separately with respect to each regulated air pollutant.

- The PSEU is located at a major source that is required to obtain a Part 70 permit;

- The PSEU is subject to an emission limitation or standard for the applicable regulated air pollutant that is not exempt;
- The PSEU uses an add-on control device to achieve compliance with such an emission limitation or standard. An add-on control device is defined in 40 CFR Part 64 as:
    - "Equipment, other than inherent process equipment, that is used to destroy or remove air pollutant(s) prior to discharge to the atmosphere. The types of equipment that may commonly be used as control devices include, but are not limited to, fabric filters, mechanical collectors, electrostatic precipitators, inertial separators, afterburners, thermal or catalytic incinerators, adsorption devices (such as carbon beds), condensers, scrubbers (such as wet collection and gas absorption devices), selective catalytic or non-catalytic reduction systems, flue gas recirculation systems, spray dryers, spray towers, mist eliminators, acid plants, sulfur recovery plants, injection systems (such as water, steam, ammonia, sorbent or limestone injection), and combustion devices independent of the particular process being conducted at an emissions unit (e.g., the destruction of emissions achieved by venting process emission streams to flares, boilers or process heaters). For purposes of this part, a control device does not include passive control measures that act to prevent pollutants from forming, such as the use of seals, lids, or roofs to prevent the release of pollutants, use of low-polluting fuel or feedstocks, or the use of combustion or other process design features or characteristics. If an applicable requirement establishes that particular equipment which otherwise meets this definition of a control device does not constitute a control device as applied to a particular pollutant-specific emissions unit, then that definition shall be binding for purposes of this part."
- The PSEU has potential pre-control device emissions of the applicable regulated air pollutant that are equal to or greater than major source thresholds; and
- The PSEU is not an exempt backup utility power emissions unit that is municipally owned.

<u>CAM Plan Due Dates</u>
For large and other (PSEU) units, CAM plan is due as part of the first permit application under the Part 70 Operating Permit Program.

<u>Summary of CAM Rule Exemptions</u>
The following emission limitations or standards are exempted from the CAM rule:

a) Post – 11/15/90 NSPS or NESHAP standards, since those standards have been and will be designed with monitoring that provides a reasonable assurance of compliance;
b) Stratospheric ozone protection requirements under Title VI of the act;
c) Acid rain program requirements;
d) Emission limitations or standards or other requirements that apply solely under an approved emissions trading program;

e) Emissions cap that meets requirements of 70.4(b)(12) or 71.6(a)(13);
f) Emission limitations or standards for which a part 70 or 71 permit specifies a continuous compliance determination method, as defined in 40 CFR 64.1; and
g) Certain municipally-owned utility units, as defined in 40 CFR 72.2.

Please note that the emission unit is not exempted from the CAM rule if nonexempt emission limitations or standards (e.g. a state rule or an older NSPS emission limits) apply to the emissions unit.

The only PSEUs associated with the proposed biomass power plant will be CO and PM emissions from the biomass boiler. Pinal Power will submit a CAM Plan under separate cover that follows EPA guidance on development of CAM plans for equipment utilizing fabric filter baghouses.

5.2 Local Air Quality Regulations – Pinal County Air Quality Control District Code of Regulations

As stated above, PCAQCD is the local agency that is responsible for regulating air quality in Pinal County. The PCAQCD requirements are set forth in the PCAQCD Code of Regulations. The following subsections describe the PCAQCD rules that are applicable to the Pinal Power Biomass Project, and requirements for compliance with the applicable rules.

5.2.1 Section 3-1-040, Applicability and Classes of Permits

This application is for a Class I permit, which is required for any source that is an affected source as defined in Section 3-1-030. The facility is subject to the requirements of Title IV of the Clean Air Act and is therefore considered an affected source. The facility is therefore applying for a Class I permit under Section 3-1-040(B)(1)(d).

5.2.2 Section 3-1-083, Compliance Provisions

Pinal Power will comply with applicable requirements to monitor emissions, and with all recordkeeping and reporting requirements that are applicable to the facility. These monitoring, recordkeeping and reporting requirements include those required under NSPS Subpart Db, under the Acid Rain Provisions, and under the Title V Operating Permit requirements.

5.2.3 Section 3-1-084, Voluntarily Accepted Federally Enforceable Emissions Limitations; Applicability; Reopening; Effective Date

Pinal Power is proposing to accept federally enforceable emissions limitations as described in Section 2 of this application. These limits will limit the emissions of NOx, CO, particulate matter, VOCs, and SOx. The federally enforceable permit limits will be permanent, quantifiable and enforceable as a practical matter, and shall be at least as

stringent as otherwise applicable limitations and requirements under either the SIP or pertinent provision of the Clean Air Act (1990), and shall not operate to relieve any other legal restriction on emissions.

5.2.4 Section 3-1-103, Annual Emissions Inventory Questionnaire

Pinal Power, LLC will complete and submit to the Control Officer an annual emissions inventory questionnaire. The questionnaire is due by March 31 or ninety days after the Control Officer makes the inventory form available, whichever occurs later, and shall include emission information for the previous calendar year. These requirements apply whether or not a permit has been issued and whether or not a permit application has been filed.

5.2.5 Section 3-1-150, Monitoring

Pinal Power, LLC will comply with applicable monitoring requirements as set forth under Section 3-1-150. Pinal Power is proposing to install a CEMS to monitor emissions of NOx and CO, and will conduct testing as required to measure emissions of particulate matter.

5.2.6 Section 3-1-160, Test Methods and Procedures

Pinal Power, LLC will utilize the applicable procedures and testing methods contained in the Arizona Testing Manual; 40 CFR Part 52, Appendices D and E; 40 CFR Part 60, Appendices A through F; and 40 CFR Part 61, Appendices B and C to determine compliance with the requirements established in this Code or contained in permits issued pursuant to this chapter.

5.2.7 Section 3-1-170, Performance Tests

Within 60 days after a source subject to the permit requirements of this chapter has achieved the capability to operate at its maximum production rate on a sustained basis but no later than 180 days after initial start-up of such source and at such other times as may be required by the Control Officer, the owner or operator of such source shall conduct performance tests and furnish the Control Officer a written report of the results of the tests. Performance tests, whether required in support of a permit application or as permit conditions, shall be conducted at the facility's maximum capacity, unless otherwise specified by the Control Officer, and data reduced in accordance with the test method and procedures contained in the Arizona Testing Manual for Air Pollutant Emissions.

5.2.8 Section 3-1-173, Quality Assurance

Pinal Power, LLC will submit a quality assurance plan to the Control Officer that meets the requirements of the Arizona Testing Manual, 40 C.F.R. Part 60 or other methods

approved by the Control Officer within 12 months of the effective date of this section as required under Section 3-1-173.

5.3 Local Air Quality Regulations – Pinal-Gila Counties Air Quality Control District Regulations

The following provides an analysis of the specific provisions of the Pinal-Gila Counties Air Quality Control District (PGAQCD) Regulations, as adopted by the Pinal County Board of Supervisors, and approved as elements of the Arizona State Implementation Plan.

5.3.1 Regulation 7-3-1.1 Visible Emissions: General

The facility will verify that the opacity of any plume or effluent shall not be as great or greater than that designated as No. 2 on the Ringelmann chart or percent Opacity equivalent to No. 2 Ringelmann, except when the provisions of Regulation 7-2-1.8, Anti-Degradation, apply. This requirement would apply to boiler emissions over a period of for a period or periods aggregating more than three minutes in any period of 60 consecutive minutes.

5.3.2 Regulation 7-3-1.2 Fugitive Dust

This regulation applies to emissions of fugitive dust. To ensure that reasonable precautions are taken to prevent particulate matter from becoming airborne, dust and other types of particulates shall be kept to a minimum by such measures as wetting down, covering, landscaping, paving, treating, or by other reasonable means. This regulation will apply to handling of biomass fuels and fly ash, as well as other potential sources of fugitive dust on site.

5.3.3 Regulation 7-3-1.7 Fuel Burning Equipment

This regulation applies to installations in which fuel is burned for the primary purpose of producing steam, hot water, hot air or other liquids, gases or solids and in the course of doing so the productions of combustion do not come into direct contact with process materials. Based on the requirements of the rule, the maximum allowable emissions of particulate for the Pinal Power biomass boiler will be 0.243 lbs/MMBTU. As discussed in Section 4, emissions from the boiler will be controlled using a multicone dust collector and ESP to 0.020 lbs/MMBTU, and will therefore meet the requirements of Regulation 7-3-1.7.

5.3.4 Regulation 7-3-2.2 Fuel Burning Installations – Sulfur Compounds

This regulation applies to an installation operated for the purpose of producing power with a resulting discharge of sulfur dioxide in the installation's effluent gas. The regulation sets forth specific sulfur dioxide limits when the facility is operating with fuel oil or coal. Because the Pinal Power Project will not utilize either fuel oil or coal, this regulation does not apply to the facility.

5.3.5 Regulation 7-3-4.1 Industrial – Carbon Monoxide Emissions

This regulation restricts the emissions of carbon monoxide without complete secondary combustion of waste gases generated by any process source. The Pinal Power Project will employ good combustion practices to restrict emissions of carbon monoxide as required under Regulation 7-3-4.1.

5.3.6 Regulation 7-3-5.1 Fuel Burning Equipment – Nitrogen Oxide Emissions

This regulation applies to an installation operated for the purpose of producing power with a resulting discharge of nitrogen oxides in the installation effluent gases. The regulation requires facilities to meet an emission limit of 0.20 lbs/MMBTU when operating on natural gas. The natural gas burners will utilize a low-NOx design that will limit emissions of uncontrolled NOx to 80 ppm. The Pinal Power facility will meet or exceed the emission limit as required under Regulation 7-3-5.1.

6.0 CONTROL TECHNOLOGIES

Pinal Power, LLC is proposing to use control technologies to control emissions of criteria pollutants to the extent feasible. The sections that follow discuss the control technologies available and, ultimately, the selection of controls for each emission unit and pollutant. t.

6.1 NOx Controls

NO_X is generated when combustion temperatures are high enough for the nitrogen in the combustion air or bound in the fuel to combine with oxygen to form NO. Depending upon conditions, some portion of the NO will react to form NO_2.

There are a variety of options available for controlling NO_X emissions from combustion sources. Some options involve combustion controls that reduce NO_X formation, while others utilize add-on control devices to remove NO_X after it is formed.

Combustion controls reduce NO_X emissions by controlling the combustion temperature and the availability of oxygen. Combustion air containing both nitrogen and oxygen can combine in a high temperature environment to form thermal NO_X. The oxidation of nitrogen that is chemically bound in fuel sources can also form what is called fuel-bound NO_X.

Add-on controls such as selective catalytic reduction (SCR) and selective non-catalytic reduction (SNCR) systems are widely used technologies for controlling NO_X emissions from combustion sources. In the SCR process, ammonia is mixed with the exhaust from the combustion device and the mixture is passed through a catalyst bed. The NO_X reacts with the ammonia aided by the catalyst to form nitrogen and water. There are several variants within SCR technology including Regenerative SCR (RSCR), and low-temperature catalyst SCR.

The SNCR process is similar to SCR in that a reagent reacts with NO_X to form nitrogen and water, although no catalyst is used to aid the reaction. The catalyst used in SCR systems allows the reactions to occur at lower temperatures than is possible in SNCR systems (450 ºF for SCR as opposed to 1,550 ºF for SNCR). The SNCR reagent can be urea, aqueous ammonia, or anhydrous ammonia, and is typically vaporized and mixed with hot flue gas from the combustion device. Hybrid SNCR/SCR systems, in which a catalyst bed is located downstream of the SNCR system, have been developed where the unreacted ammonia injected by the SNCR system (and additional ammonia, if necessary) is used by the catalyst to further reduce NO_X emissions.

Pinal Power will install an SCR/SNCR system to limit NO_X emissions to 0.060 lb/MMBtu (on a 24-hour block average basis), or 24.12 lb/hr at the maximum operating rate of the proposed boiler.

6.2 CO Controls

Carbon monoxide (CO) is a product of the chemical reaction between carbonaceous fuels and oxygen. In fuel-rich mixtures, CO occurs as the product of combustion. In fuel-lean mixtures CO can result due to poor mixing of fuel and air in the combustion zone (so the sub-region is fuel-rich) or because of very high temperatures in the combustion zone (above 1,727 C), which causes dissociation of CO_2 into CO (Wark and Warner, 1981).

Catalytic oxidizers use a matrix or "bed" coated with noble metals (e.g., platinum) to facilitate the conversion of a criteria pollutant to a non-pollutant (in this case CO to CO_2). Catalytic oxidizers operate in a temperature range of approximately 650 ^{o}F to 1,000 ^{o}F. At lower temperatures the CO conversion efficiency falls off rapidly. Because higher temperatures are desirable for improved conversion of CO to CO_2 by the catalyst, the exhaust temperature must be increased, resulting in higher fuel use. In order to reduce catalyst masking and pressure drop across the device, a particulate control device must be located upstream of the catalyst bed. Also, the size of the particulate control system must be increased to accommodate the higher temperature, and therefore higher volume, exhaust flow. Although the catalyst would be located downstream of a particulate control device, a steam injection system is used to periodically remove particulate matter from the catalyst.

Oxidation catalysts are generally capable of providing between 40 and 90 percent reduction in CO emissions. Because fuel (e.g., natural gas) would need to be combusted to increase the exhaust temperature, the catalyst temperature would be in the lower portion of the range over which the desired reaction occurs resulting in lower control

Pinal Power proposes will use an oxidation catalyst to control CO to 0.084 lbs/MMBTU at the maximum operating rate of the proposed boiler.

6.3 Particulate Matter Controls

PM_{10} is produced by combustion processes as unburned solid carbon (soot), unburned vapors or gases that subsequently condense, and the unburnable portion of the fuel (ash).

The two most popular add-on control technologies for control of PM_{10} emissions from a boiler are electrostatic precipitators (ESP) and baghouses. ESPs remove particles from an exhaust stream by imposing an electrical charge on the particles and then attracting them to an oppositely charged plate. The dust collected on the charged plates is periodically removed by vibrating or rapping of the plates.

Baghouses, or fabric filters, use various types of materials (generally fabrics) to trap particles while the gas passes through the voids in the material. The dust that becomes caked on the fabric bags is removed periodically by shaking, by blowing jets of air, or by

using sonic horns. Often a mechanical collector, such as a multiclone, is used to remove larger particulate matter before the exhaust reaches the primary control device.

The most common technology for controlling PM_{10} emissions from a wood-fired boiler is an ESP preceded by a multiclone. Baghouses have been employed to control PM_{10} emissions from fluidized bed boilers and boilers in which wood is fired with other fuels such as oil, sludge, or tires. The likelihood of fires in downstream ducting or control devices is significant because of the high carbon content of the ash from boilers that burn solely woody or agricultural biomass. ESPs, constructed mostly of metal, suffer considerably less damage from fires than baghouses, which generally have combustible fabric filters. Venturi scrubbers are generally employed to control PM_{10} from smaller boilers with lower exhaust flow, and typically have lower control efficiencies than ESPs or baghouses

Pinal Power will use a mechanical collector followed by an ESP to achieve a voluntary emission limit of 0.020 lbs/MMBTU for PM_{10} control.

6.4 VOC Controls

VOC emissions are generally the result of incomplete combustion of fuel. In the case of wood, volatiles are released as the fuel is heated in the furnace, some portion of which escapes combustion by improper mixing with oxygen or zones of relatively low temperature.

Combustion controls provide wide range of control effectiveness depending on the configuration of the system. Generally, emissions resulting from incomplete combustion (CO and VOC) are balanced with emissions related to high furnace temperatures (NO_X) to achieve optimally low emissions of all pollutants.

Oxidation catalysts are generally capable of providing between 40 and 90 percent reduction in VOC emissions. As for CO, the expense of reheating the exhaust using supplemental fuel (e.g., natural gas) the catalyst temperature would be in the lower portion of the range over which the desired reaction occurs resulting in lower control efficiencies.

Pinal Power proposes will use an oxidation catalyst to control VOCs to 0.010 lbs/MMBTU at the maximum operating rate of the proposed boiler.

6.5 SO_2 Controls

Sulfur dioxide (SO_2) emissions are entirely dependent upon the amount of sulfur present in the fuel. Sulfur contained in the fuel combines with oxygen at combustion temperatures to form SO_2.

There are basic alternatives for reducing SO_2 emissions from combustion sources: removal of sulfur from the fuel before it is combusted, and removal of SO_2 from the exhaust gas after combustion.

Removing sulfur from fuel before it is combusted has been employed to remove sulfur-containing nonorganically-bound minerals (e.g., pyrites) from coal, but this practice is not feasible for biomass, where the sulfur is organically bound, and most biomass, wood in particular is considered a low-sulfur fuel. All permitted wood-fired boilers have no SO_2 control requirement other than the exclusive use of wood, and perhaps a limit on the sulfur content of a start-up or co-fired fuel.

Flue gas desulfurization (FGD) systems, which remove SO_2 from the exhaust gases after they leave the furnace using a sorbent material (wet or dry, depending on the design of the system) are typically used to control SO_2 emissions from coal-fired boilers. The sorbent comes in contact with the SO_2 in the exhaust gas and reacts with it to form a compound or compounds that can be collected using a downstream particulate control system.

Pinal Power proposes that no control system is feasible for reducing SO_2 emissions from a stoker-type wood-fired boiler, and that the boiler SO_2 emission rate will be 0.025 lb/MMBtu, which is equivalent to a mass emission rate of 10.05 lbs/hr.

6.6 Startup, Shutdown, and Periods of Upset

During startup, shutdown, and periods of upset, CO and VOC concentrations in the flue gas will exceed those experienced under normal operation. This is a characteristic of all biomass-fueled combustion devices. Similarly, SNCR and SCR technologies require flue gas temperatures above approximately 1500°F and 550°F, respectively, before as-designed NO_X emission abatement will occur. During startup, shutdown, and periods of upset it is not technologically feasible to meet CO or NO_X emission limits that are specified on the basis of normal boiler operation.

Two 62.5 MMBtu/hr heat input capacity natural gas-fired auxiliary burners will be used to reduce event duration and stabilize combustion as necessary. The proposed burners will be a low-NO_X design (80 ppm NO_X). Because of the relatively short use periods, ultra low-NO_X design burners, which incorporate flue gas recirculation, are not technologically feasible for the purpose intended. Pinal Power proposes that, during startup and shutdown periods, CO, VOCs, and NO_X will be controlled by limiting the frequency and duration of startups, shutdowns and periods of upset through the implementation of best practices and training.

7.0 COMPLIANCE REQUIREMENTS

This section documents the compliance requirements to which the facility will be subject and the means of demonstrating compliance with applicable regulations.

7.1 Testing

This section describes the testing requirements to which the facility is subject.

7.1.1 Initial Performance Tests

Within 60 days from which the facility and boiler have achieved the capability to operate at its maximum production rate on a sustained basis, but no later than 180 days after initial startup, Pinal Power, LLC will conduct performance tests and shall furnish the PCAQCD a written report of the results of the tests as provided below. Performance tests shall be conducted using the test methods specified for each pollutant, or equivalent methods as approved by the District pursuant to approval of the test plan required under Section 7.1.2 below. The tests shall be conducted using standard test methods approved by the U.S. EPA under 40 CFR Part 60. These tests shall be performed at the maximum practical production rate. The CEMS shall be in place and operating prior to conducting the performance tests. Each performance test shall address:

a. Nitrogen oxides emissions, 40 CFR Part 60, Appendix A, Reference Method 7E or 20.
b. Carbon monoxide emissions, 40 CFR Part 60, Appendix A, Reference Method 10.
c. Particulate matter emissions (filterable PM_{10}), 40 CFR Part 60, Appendix A, Reference Method 5 or 201A and (condensable PM_{10}), Method 202.
d. Volatile organic compound emissions, 40 CFR Part 60, Appendix A, Reference Method 25a.
e. Opacity, 40 CFR Part 60, Appendix A, Reference Method 9.

7.1.2 Test Protocol

A test plan protocol for each test shall be submitted to the PCAQCD at least 30 days before testing.

7.1.3 Subsequent Performance Testing

This section describes annual testing requirements that will be conducted by Pinal Power.

a. Nitrogen oxides emissions, 40 CFR Part 60, Subpart Db, Pinal Power shall conduct subsequent nitrogen oxides performance tests on an annual basis, no

more than 14 calendar months following the previous performance tests. Test methods listed in Section 7.1.1 shall be used.

b. Carbon monoxide emissions, performance testing for carbon monoxide shall be covered under annual Relative Accuracy Test Audits (RATA).
c. Particulate matter emissions, filterable portion, Pinal Power, LLC will conduct testing as required to demonstrate compliance with particulate matter emission standards. Testing may include use of surrogates such as performance of control systems and throughputs as a parametric method to demonstrate compliance.
d. VOC emissions, Pinal Power, LLC will conduct testing as required to demonstrate compliance with VOC emission standards. Testing may include use of surrogates such as performance of control systems and throughputs as a parametric method to demonstrate compliance.
e. SO_2 emissions, Pinal Power, LLC will conduct testing as required to demonstrate compliance with SO_2 emission standards. Testing may include use of certifications of pipeline quality fuel as a parametric monitoring method to demonstrate that SO_2 emissions will meet the requirements of 40 CFR Part 60, Subpart Db.

7.1.4 Acid Rain Compliance

Because the Pinal Power Biomass Facility is subject to the requirements of 40 CFR Part 72, Pinal Power, LLC will monitor SO_2, NOx, and CO emissions as required under 40 CFR Part 75. At a minimum, monitoring and corresponding records required under this subsection shall conform to the requirements of 40 CFR Parts 75.10, 75.11, 75.12, and 75.13.

7.2 Monitoring

This section describes the monitoring requirements to which the facility is subject.

7.2.1 Continuous Emissions Monitoring

Pinal Power, LLC shall install, calibrate, maintain, and operate a continuous emissions monitoring system (CEMS) to record daily emissions of nitrogen oxides and carbon monoxide as required under the requirements of 40 CFR Part 75. Pinal Power shall conduct an initial NOx CEMS evaluation and subsequent annual evaluations, in accordance with the RATA requirements for NOx CEMS under 40 CFR Part 75, Appendix A. Pinal Power, LLC shall monitor and record daily emissions of NOx and CO from the boiler, shall total and record these daily emissions on a calendar-month basis, and shall maintain and record a rolling annual average of emissions rolled on a calendar month basis. In the event that CEMS data is unavailable due to monitoring equipment malfunction, Pinal Power may use Part 75 data substitution methodology to define the missing data.

Pinal Power shall conduct an initial CO CEMS evaluation and subsequent annual evaluations in accordance with 40 CFR Part 60, Appendix B, Performance Specification 4 or 4A. Pinal Power shall follow the quality assurance procedures specified in Procedure I of 40 CFR Part 60, Appendix F, for the CO CEMS. The procedures include daily calibration drift and quarterly accuracy determinations. Pinal Power shall conduct evaluations of the CO CEMS as required by the PCAQCD.

7.2.2 Parametric Emissions Monitoring Requirements

As a surrogate measurement for monitoring emissions of sulfur dioxide from an affected unit, Pinal Power shall maintain daily records reflecting total fuel consumption in the boiler. On a cycle adequate to comply with the emission limitations and reporting requirements, Pinal Power shall utilize the SO_2 emission calculation methodology set forth in 40 CFR Part 75, Appendix D, Section 2.3, to calculate and report SO_2 emissions when combusting natural gas. Sulfur content of fuels shall be determined either by sampling the gaseous fuel daily when operating or maintaining a contractual commitment with the pipeline gas supplier demonstrating that the gas has a total sulfur content of 5 grains per 100 standard cubic feet or less.

As a surrogate measurement for monitoring emissions of PM_{10}, Pinal Power, LLC shall maintain daily records of the type and quantity of fuel usage in the boiler, as well as the quantity of power produced when combusting the fuel. In addition, Pinal Power shall maintain daily records of ESP performance and fly ash collection. PM_{10} shall be calculated based on fuel consumption and control system records. Pinal Power, LLC shall rely on manufacturer's data or test results to calculate PM_{10} emissions.

As a surrogate measurement for monitoring emissions of VOCs, Pinal Power, LLC shall maintain daily records of the type and quantity of fuel usage in the boiler as well as the quantity of power produced when combusting that fuel. VOC emissions shall be calculated based on fuel consumption data. Pinal Power may rely upon manufacturer's data or test results to calculate VOC emissions.

APPENDIX A

PERMIT APPLICATION FORMS

Pinal County Air Quality Control District

P.O. Box 987 – Florence, AZ 85132 P-(520) 866-6929 F-(520) 866-6967

PINAL • COUNTY
Wide open opportunity

Permit Application

(As required by A.R.S. §49-480, and Chapter 3, Article I, Pinal County Air Quality Control District Code of Regulations)

1. Permit to be issued to:
   Pinal Power, LLC
   (Name and legal status (e.g. corporation or proprietorship) or organization that is to receive permit)

2. Mailing Address:
   13835 N. Tatum Blvd., Suite 9-412
   City: Phoenix State: AZ Zip: 85032
   Billing Address (if different from above):
   City: State: Zip:

3. Plant Name (if different from above):

4. Name(s) of Owner or Operator: Hal Mitchell
   Phone: 951-308-9136

5. Plant/Site Manager: Phone: Fax:

6. Contact Person: Phone: Fax:

7. Equipment/Plant Location or Proposed Location Address: 38743 West Cowtown Road
   City: Maricopa Zip : 85238 Parcel #: 502-42-003A2
   Section/Township/Range: Section 6, Township 5 south, Range 4 east of Gila and Slat River Base and Meridian
   Latitude/Longitude: 33 00' 56.68" N, 111 59' 8.87" W Elevation: 371 meters

8. General Nature of Business: Biomass Power Plant
   Standard Industrial Classification Code: 4911

9. Type of Organization
   - [ ] Corporation State of Incorporation:
   - [x] Arizona Limited Liability
   - [ ] Government Entity Government Facility Code:
   - [ ] Individual Owner
   - [ ] Partnership
   - [ ] Other (Specify):

10. Permit Application Basis: (Check all that apply)

- [x] New Source
- [ ] Permit Revision
- [ ] Renewal of Existing Permit
- [ ] Portable Source
- [x] General Permit
- [ ] Permit Transfer

For renewal or modification, include existing permit number: _____

Date of Commencement of Construction or Modification: _____

Is any of the equipment to be leased to another individual or entity? [ ] Yes [x] No

11. If necessary to preserve this source's status as a less-than-major source, the undersigned agrees that the permit or this source ***SHOULD*** [x] ***SHOULD NOT*** [ ] include Federally Enforceable Provisions in accord with Code §3-1-084.

12. The undersigned states and certifies that, based on information and belief formed after reasonable inquiry, the statements and information in this document and supporting materials are true, accurate and complete. To the extent that this application pertains to an assignment of an existing permit, the undersigned further agrees to comply with and accept each and every obligation associated with that existing permit. *Knowingly presenting a false certification constitutes a criminal offense under A.R.S. §13-2704.*

13. The undersigned applicant states that he/she currently has, or at the time construction and/or operation begins, will have legal authority to enter upon and use the premises upon which this source will be operated.

14. Attachments describing the process to be permitted or revised including a process description, a list of equipment, capacities, MSDS sheets and anticipated production or throughput should be submitted with the application.

15. For new sources, an application filing deposit fee must be included with the application.

_____

Signature of Responsible Official of Organization

_____

Typed or Printed Name of Signer

_____ Official Title of Signer

_____ Date

Fuel Burning Equipment Information

Equipment	Capacity (BTU/HR)	Fuel Type	Model #	Serial #	Manufacturer	Manufacturing Date
Biomass Boiler	402 MM	Biomass	N/A	N/A	McBurney	2010

APPENDIX B

EMISSION CALCULATIONS

Table B-1
Particulate Emissions - Dozer Biomass Pile Processing, Outdoor Storage Area
Pinal Power LLC

					Emission Factor, EF			Short term PTE (lb/hr)			Long-term PTE (tpy)		
Process	**Material Silt Content, S%**	**Material Moisture Content, %**	**Number of Dozers, n**	**Annual Operating Hours**	**PM**	**PM10**	**PM2.5**	**PM**	**PM10**	**PM2.5**	**PM**	**PM10**	**PM2.5**
Dozer use on Biomass Storage Areas	0.16	30	2	8760	0.007596	0.000999	0.00014	0.015191	0.001999	0.00028	0.066537	0.008755	0.001226

Calculation Method:

EF_{PM} (lb/hr/dozer) = $(5.7 * S^{1.2})/(M^{1.3})$

EF_{PM10} (lb/hr/dozer) = $(0.75 * S^{1.2})/(M^{1.3})$

$EF_{PM2.5}$ (lb/hr/dozer) = $(0.105 * S^{1.2})/(M^{1.3})$

SOURCE: USEPA AP-42, Table 11.9-1, Bulldozing, Overburden

Table B-2
Wind Erosion Particulate Emissions
Pinal Power LLC

Frequency of Disturbance (days/year)	365
Total Pile Surface Area, A (m^2)	40,000
Threshold Friction Velocity, u_t* (m/s) [(a)]	0.58
Anticipated Control Efficiency, C [(b)]	50

Particle Size Multipliers		
PM	**PM10**	**PM2.5**
1	0.5	0.075

Erosion Potential					**Fugitive Emissions, tons/disturbance**		
Wind Speed during High Wind Event ($u^*_{z,i}$)	**Reference Anemometer Height (m)**	**10-m Ref Height wind speed ($u^*_{10,i}$)**	**Friction Velocity u_i* (m/s)**	**Erosion Potential, P_i (g/m^2)**	**PM**	**PM_{10}**	**$PM_{2.5}$**
10.23	3	12.1554	0.6442	1.8452	0.0814	0.0407	0.0061
10.28	3	12.2148	0.6474	1.9480	0.0859	0.0429	0.0064
10.29	3	12.2267	0.6480	1.9687	0.0868	0.0434	0.0065
10.4	3	12.3574	0.6549	2.1993	0.0970	0.0485	0.0073
10.44	3	12.4049	0.6575	2.2845	0.1007	0.0504	0.0076
10.59	3	12.5832	0.6669	2.6107	0.1151	0.0576	0.0086
10.89	3	12.9396	0.6858	3.2942	0.1453	0.0726	0.0109
10.94	3	12.9990	0.6889	3.4122	0.1505	0.0752	0.0113
11.87	3	14.1041	0.7475	5.8154	0.2564	0.1282	0.0192
12.08	3	14.3536	0.7607	6.4132	0.2828	0.1414	0.0212
Total Uncontrolled Emissions, tons/year					**1.4018**	**0.7009**	**0.1051**
Total Controlled Emissions, tons/year					**0.7009**	**0.3504**	**0.0526**

Note: 10 highest wind speeds measured at Cowtown monitoring station from 2006 - 2008.
Notes:
(a) Threshold friction velocity assumed to be 0.58 m/s from AP-42, Table 13.2.5-1, for midrange size
(b) Assume 50% control efficiency due to moisture content of biomass

Calculation Method (from AP-42, Section 13.2.5)

$u^*_{10,i} = u^*_{z,i}$ (ln(10/0.005)/ln(z/0.005))

$u^*_i = 0.053\ u^*_{10,i}$

$P_i = 58\ (u^*_i - u_t^*)2 + 25\ (u^*_i = u_t^*)$, for $u^*_i > u_t^*$

$P_i = 0$ for $u^*_i < u_t^*$

$R_i = kP_iA$

$R = \Sigma^j R_i$

$R_c = R\ (1-C)$

$u^*_{10,i}$ = fastest mile wind speed for the ith disturbance normalized to 10-m anemometer height

$u^*_{z,i}$ = fastest mile wind speed for the ith disturbance measured at anemometer with height of z meters

u^*_i = friction velocity for the ith disturbance

u_t^* = threshold friction velocity

P_i = erosion potential for the ith disturbance

R_i = emission rate for the ith disturbance

k = particle size multiplier

R = total uncontrolled emission rate, annual emissions

C = control efficiency, %

R_c = controlled emission rate

Table B-3
Estimated Particulate Emission Rates for Fuel Handling Operations
Pinal Power LLC

Process	Biomass Throughput, T		Number of Drop Points during Handling [a]	Effecive Biomass Handled, T_{eff}		Mean wind speed, u (mph) [c]	Material Moisture Content, M %	Air Pollutant Emission Factor			Maximum Hourly Emissions			Annual Emissions			
	Maximum (tons/hr) [b]	Average (tons/hr)		Hourly (tons/hr)	Annual (tons/year)			(lbs emitted/ton throughput)			lbs/hr			tons/yr			
								PM	PM_{10}	$PM_{2.5}$	PM	PM_{10}	$PM_{2.5}$	PM	PM_{10}	$PM_{2.5}$	ERMOD Source
Truck Dumpers	131.73	42.40052185	12	1580.76	4457142.86	5.12	30	5.51E-05	2.61E-05	3.95E-06	8.71E-02	4.12E-02	6.24E-03	1.23E-01	5.81E-02	8.80E-03	TD1 and TD2
Secondary Processing Conveyor Drop Points	131.73	42.40052185	6	790.38	2228571.43	5.12	30	5.51E-05	2.61E-05	3.95E-06	4.36E-02	2.06E-02	3.12E-03	6.14E-02	2.90E-02	4.40E-03	
Primary Coarse Screen Supply Conveyor Drop Points	131.73	42.40052185	6	790.38	2228571.43	5.12	30	5.51E-05	2.61E-05	3.95E-06	4.36E-02	2.06E-02	3.12E-03	6.14E-02	2.90E-02	4.40E-03	
Secondary Coarse Screen Supply Conveyor Drop Points	131.73	42.40052185	6	790.38	2228571.43	5.12	30	5.51E-05	2.61E-05	3.95E-06	4.36E-02	2.06E-02	3.12E-03	6.14E-02	2.90E-02	4.40E-03	
Fine Screen Supply Conveyor Drop Point	131.73	42.40052185	6	790.38	2228571.43	5.12	30	5.51E-05	2.61E-05	3.95E-06	4.36E-02	2.06E-02	3.12E-03	6.14E-02	2.90E-02	4.40E-03	
Outdoor Storage Conveyor Drop Point	131.73	42.40052185	3	395.19	1114285.71	5.12	30	5.51E-05	2.61E-05	3.95E-06	2.18E-02	1.03E-02	1.56E-03	3.07E-02	1.45E-02	2.20E-03	
Outdoor Storage Bypass Conveyor	131.73	42.40052185	1	131.73	371428.571	5.12	30	5.51E-05	2.61E-05	3.95E-06	7.26E-03	3.43E-03	5.20E-04	1.02E-02	4.84E-03	7.33E-04	
Indoor Fuel Storage	131.73	42.40052185	6	790.38	2228571.43	5.12	30	5.51E-05	2.61E-05	3.95E-06	4.36E-02	2.06E-02	3.12E-03	6.14E-02	2.90E-02	4.40E-03	FH
Total Emissions											**3.34E-01**	**1.58E-01**	**2.39E-02**	**4.71E-01**	**2.23E-01**	**3.37E-02**	4.73E-03

Notes:
(a) Assumed based on similar facility design
(b) Maximum based on input of 131.73 tons/hour from mass balance. Average based on 260,000 bone dry tons/year, divided by 0.7 to account for 30% moisture content.
(c) From Cowtown meteorological data

Calculation Method:
Throughput, T_{eff} = T x No. of drop points in process
Emission Factor, EF (lb/ton) = k x $(0.0032 * (U/5)^{1.3} /(M/2)^{1.4})$ from AP-42, Section 13.2.4
k = Particle size multiplier
u = mean wind speed, miles/hour
M = moisture content of material %

k = Particle size multiplier		
PM	PM10	PM2.5
0.74	0.35	0.053

Table B-4
Estimated Particulate Emission Rates for Fly Ash Handling Operations
Pinal Power LLC

Process	Ash Throughput, T		Number of Drop Points during Handling [a]	Effecive Ash Handled, T_{eff}		Mean wind speed, u (mph) [c]	Material Moisture Content, M %	Air Pollutant Emission Factor			Maximum Hourly Emissions			Annual Emissions		
	Maximum (tons/hr) [b]	Average (tons/hr)		Hourly (tons/hr)	Annual (tons/year)			(lbs emitted/ton throughput)			lbs/hr			tons/yr		
								PM	PM_{10}	$PM_{2.5}$	PM	PM_{10}	$PM_{2.5}$	PM	PM_{10}	$PM_{2.5}$
Bottom Ash Handling																
Convective Pass Hoppers	0.872	0.872	3	2.616	22916.16	5.12	5	6.77E-04	3.20E-04	4.85E-05	1.77E-03	8.38E-04	1.27E-04	7.76E-03	3.67E-03	5.56E-04
Convective Pass Hopper Ash Collection Conveyor	0.872	0.872	3	2.616	22916.16	5.12	5	6.77E-04	3.20E-04	4.85E-05	1.77E-03	8.38E-04	1.27E-04	7.76E-03	3.67E-03	5.56E-04
Convective Pass Hopper Ash Transfer Conveyor	0.872	0.872	3	2.616	22916.16	5.12	5	6.77E-04	3.20E-04	4.85E-05	1.77E-03	8.38E-04	1.27E-04	7.76E-03	3.67E-03	5.56E-04
Fly Ash Handling																
Baghouse Hoppers	1.312	1.312	3	3.936	34479.36	5.12	5	6.77E-04	3.20E-04	4.85E-05	2.67E-03	1.26E-03	1.91E-04	1.17E-02	5.52E-03	8.36E-04
Collecting Conveyors	1.31	1.31	3	3.93	34426.8	5.12	5	6.77E-04	3.20E-04	4.85E-05	2.66E-03	1.26E-03	1.91E-04	1.17E-02	5.51E-03	8.35E-04
Baghouse Ash Transfer Conveyor	1.31	1.31	3	3.93	34426.8	5.12	5	6.77E-04	3.20E-04	4.85E-05	2.66E-03	1.26E-03	1.91E-04	1.17E-02	5.51E-03	8.35E-04
Ash Storage																
Ash Transfer Conveyor	2.182	2.182	3	6.546	57342.96	5.12	5	6.77E-04	3.20E-04	4.85E-05	4.43E-03	2.10E-03	3.17E-04	1.94E-02	9.18E-03	1.39E-03
Ash Elevating Conveyor	2.182	2.182	3	6.546	57342.96	5.12	5	6.77E-04	3.20E-04	4.85E-05	4.43E-03	2.10E-03	3.17E-04	1.94E-02	9.18E-03	1.39E-03
Ash Shipment																
Ash Silo to Ash Conditioner Drop Point	80	80	3	80	175200	5.12	5	6.77E-04	3.20E-04	4.85E-05	5.42E-02	2.56E-02	3.88E-03	5.93E-02	2.81E-02	4.25E-03
Ash Silo , Ash Conditioner Chutes	80	80	3	80	175200	5.12	5	6.77E-04	3.20E-04	4.85E-05	5.42E-02	2.56E-02	3.88E-03	5.93E-02	2.81E-02	4.25E-03
Total Emissions											**1.31E-01**	**6.17E-02**	**9.35E-03**	**2.16E-01**	**1.02E-01**	**1.54E-02**

NOTE: assume 2 shipments per day

Notes:
(a) Assumed based on similar facility design
(b) Maximum based on twice fuel handling rate for 465 MMBTU/hr boiler, assuming 8,500 BTU/lb fuel, for 27.35 tons/hr
(c) From Cowtown meteorological data

Calculation Method:
Throughput, T_{eff} = T x No. of drop points in process
Emission Factor, EF (lb/ton) = k x $(0.0032 * (U/5)^{1.3} /(M/2)^{1.4})$ from AP-42, Section 13.2.4
k = Particle size multiplier
u = mean wind speed, miles/hour
M = moisture content of material %

k = Particle size multiplier		
PM	**PM10**	**PM2.5**
0.74	0.35	0.053

Table B-5
Hazardous Air Pollutant Emissions
Pinal Power LLC

HAPS Emissions

HAPs	Emission Factors Wood-Waste Boiler		Emissions, lbs/ Boiler	Emissions, tons/year Boiler	
	Emission Factor, lb/MMBTU	Source	McBurney Boiler,	McBurney Boiler,	
			MMBTU/hr	Hours/year	
TAC			**402**	**8760**	
Acetaldehyde	4.71E-05	MACT Test	1.89E-02	8.29E-02	
Acetophenone	3.20E-09	AP-42	1.29E-06	5.63E-06	
Acrolein	9.78E-06	MACT Test	3.93E-03	1.72E-02	
Benzene	1.11E-05	MACT Test	4.46E-03	1.95E-02	
bix-(2-Ethylhexyl phthalate)	4.70E-08	AP-42	1.89E-05	8.28E-05	
2-Butanone	5.40E-06	AP-42	2.17E-03	9.51E-03	
Carbon tetrachloride	4.23E-06	MACT Test	1.70E-03	7.45E-03	
Chlorine	2.80E-04	MACT Test	1.13E-01	4.93E-01	
Chlorobenzene	7.54E-06	MACT Test	3.03E-03	1.33E-02	
Chloroform	5.13E-06	MACT Test	2.06E-03	9.03E-03	
2,4-Dinitrophenol	3.65E-05	MACT Test	1.47E-02	6.43E-02	
Ethylbenzene	5.73E-07	MACT Test	2.30E-04	1.01E-03	
Formaldehyde	1.77E-04	MACT Test	7.12E-02	3.12E-01	
Hydrogen Chloride	1.90E-02	AP-42	7.64E+00	6.69E+00	NOTE: Assuming Trona injection controls emissions by 80%
Naphthalene	9.70E-05	MACT Test	3.90E-02	1.71E-01	
4-Nitrophenol	3.50E-05	MACT Test	1.41E-02	6.16E-02	
Pentachlorophenol	2.16E-07	MACT Test	8.68E-05	3.80E-04	
Phenol	4.18E-05	MACT Test	1.68E-02	7.36E-02	
Propionaldehyde	6.11E-05	MACT Test	2.46E-02	1.08E-01	
Styrene	5.60E-07	MACT Test	2.25E-04	9.86E-04	
Tetrachloroethene	5.41E-06	MACT Test	2.17E-03	9.53E-03	
Toluene	4.60E-06	MACT Test	1.85E-03	8.10E-03	
Trichloroethene	3.00E-05	MACT Test	1.21E-02	5.28E-02	
2,4,6-Trichlorophenol	2.16E-07	MACT Test	8.68E-05	3.80E-04	
Vinyl Chloride	3.13E-06	MACT Test	1.26E-03	5.51E-03	
Xylene	4.06E-06	MACT Test	1.63E-03	7.15E-03	
				8.22E+00	
PAHs					
Acenaphthene	9.10E-07	AP-42	3.66E-04	1.60E-03	
Acenathphylene	5.00E-06	AP-42	2.01E-03	8.80E-03	
Anthracene	3.00E-06	AP-42	1.21E-03	5.28E-03	
Benzo(a)anthracene	6.50E-08	AP-42	2.61E-05	1.14E-04	
Benzo(a)pyrene	2.60E-06	AP-42	1.05E-03	4.58E-03	
Benzo(b)fluoranthene	1.00E-07	AP-42	4.02E-05	1.76E-04	
Benzo(e)pyrene	2.60E-09	AP-42	1.05E-06	4.58E-06	
Benzo(g,h,i)perylene	9.30E-08	AP-42	3.74E-05	1.64E-04	
Benzo(j,k)fluroanthene	1.60E-07	AP-42	6.43E-05	2.82E-04	
Benzo(k)fluoranthene	3.60E-08	AP-42	1.45E-05	6.34E-05	
Chyrsene	3.80E-08	AP-42	1.53E-05	6.69E-05	
Dibenzo(a,h)anthracene	9.10E-09	AP-42	3.66E-06	1.60E-05	
Fluoranthene	1.60E-06	AP-42	6.43E-04	2.82E-03	
Fluorene	3.40E-06	AP-42	1.37E-03	5.99E-03	
Perylene	5.20E-10	AP-42	2.09E-07	9.16E-07	
Phenanthrene	7.00E-06	AP-42	2.81E-03	1.23E-02	
Pyrene	3.60E-06	AP-42	1.45E-03	6.34E-03	
				4.86E-02	
Dioxins/Furans					
Tetrachlorodibenzo-p-dioxins	8.60E-12	AP-42	3.46E-09	1.51E-08	