State	Utah
State Agency	Department of Environmental Quality
Affected Area	Hill AFB
Regulation	Source-specific requirements
Rule Number	Ozone NAAQS Approval Orders
Rule Title	BAQE-669-88, Approval Order for Paint Distillation Unit in Building 514, Davis County (12/20/1988)
State Effective Date	03/04/1997
State Adoption Date	02/05/1997
EPA Effective Date	08/18/1997
Notice of Final Rule Date	07/17/1997
Notice of Final Rule Citation	62 FR 38213
Comments	

Rule:

Hill AFB - DAQE-669-88.pdf

DEPARTMENT OF HEALTH
DIVISION OF ENVIRONMENTAL HEALTH

Norman H. Bangerter
Governor
Suzanne Dandoy, M.D., M.P.H.
Executive Director
Kenneth L. Alkema
Director

288 North 1460 West
P.O. Box 16690
Salt Lake City, Utah 84116-0690
(801) 538-6108

BAQE-669-88

December 20, 1988

Thayne Judd, Colonel
United States Air Force
Headquarters Ogden Air Logistics Center (AFLC)
Hill AFB, Utah 84056-5149

Dear Colonel Judd:

Re: Approval Order for Paint Distillation Unit in Building 514
Davis County, CDS A1

The above-referenced project has been evaluated and found to be consistent with the requirements of the Utah Air Conservation Regulations (UACR) and the Utah Air Conservation Act. A 30-day public comment period was held and all comments received were evaluated. The conditions of this approval order reflect any changes to the proposed conditions which resulted from the evaluation of the comments received. This air quality approval order authorizes the project with the following conditions and failure to comply with any of the conditions may constitute a violation of this order:

1. Hill Air Force Base shall install and operate the two distillation units to be located in building 514 according to the information submitted in the notice of intent dated August 2, 1988.

2. The total amount of nonexempt paints/solvents to be distilled in both units shall not exceed 40,000 gallons per 12-month period without prior approval in accordance with Section 3.1, UACR. Compliance with the limitations shall be determined on a rolling monthly total. On the first day of each month a new 12-month total shall be calculated using the previous 12 months. Records of usage shall be kept for all periods when the plant is in operation. Records of usage shall be made available to the Executive Secretary upon request, and shall include a period of two years ending with the date of the request. Usage shall be determined by maintenance of an operations log which shall be kept in building 514. Entries for the volumes of liquids distilled shall be made on a daily basis.

3. Both distillation units shall be equipped with a water cooled shell and tube condensers. They shall operate whenever distillation is taking place.

4. All installations and facilities authorized by this approval order shall be adequately and properly maintained.

5. The Executive Secretary shall be notified in writing upon start-up of the installation, as an initial compliance inspection is required.

Any future modifications to the equipment approved by this order must also be approved in accordance with Section 3.1.1, UACR.

This approval order in no way releases the owner or operator from any liability for compliance with all other applicable federal, state, and local regulations including the Utah Air Conservation Regulations.

The fee for issuing this approval order is $278.56. The amount is payable to the Bureau of Air Quality, sent to the Executive Secretary, Utah Air Conservation Committee, 288 North 1460 West, P.O. Box 16690, Salt Lake City, Utah 84116-0690 and is due within 30 days after receipt of this approval order.

Sincerely,

F. Burnell Cordner

F. Burnell Cordner
Executive Secretary
Utah Air Conservation Committee

FBC/MK/cc

cc: EPA Region VIII, John Dale
Davis County Health Department

DEPARTMENT OF THE AIR FORCE
HEADQUARTERS OGDEN AIR LOGISTICS CENTER (AFLC)
HILL AIR FORCE BASE, UTAH 84056-5149

AUG 0 2 1988

Mr F. Burnell Cordner, Executive Secretary
Utah Air Conservation Committee
Bureau of Air Quality
288 North 1460 West
PO Box 16690
Salt Lake City UT 84116-0690

Re: Notice of Intent to Construct Solvent & Waste Paint Distillation Units - Bldg 514

Dear Mr Cordner

In compliance with Section 3.1 of the State Air Conservation Regulations, we submit the attached Notice of Intent to Construct.

If this office can provide additional information, please feel free to contact Jay Gupta at 777-6742.

Sincerely

THAYNE H. JUDD, Col, USAF
Chief, Environmental Mgt Office

1 Atch
Notice of Intent to Construct

RECEIVED
AUG 5 1988
AIR QUALITY

4.2.4-894

NOTICE OF INTENT TO CONSTRUCT
SOLVENT AND WASTE PAINT DISTILLATION UNITS - BLDG 514

1. PROJECT DESCRIPTION:

We propose to install two distillation units in bldg 514. A Finish Engineering Co's Model BCF-380, solvent distillation unit will be used to distill only the "exempt solvent" 1,1,1-trichloroethane (TCA) and possibly freon. A waste paint distillation unit (not yet selected) will be used to distill solvents from waste paints and paint cleanup solvents. Both of these projects are waste reduction projects aimed at substantially reducing hazardous waste while recovering valuable solvents for recycle and reuse. Each unit comprises of a still pan with heating coils, a water cooled condenser, associated controls and a clean solvent receiving drum. Brochures from two manufacturers of this type of equipment are attached.

2. AIR EMISSIONS:

The possible air emissions from this equipment are non-condensible and fugitive hydrocarbon vapors displaced during filling of clean solvent drums. These Volatile Organic Compounds (VOCs) may consist of, but not limited to, methyl ethyl ketone, toluene, xylene, methyl isobutyl ketone, methyl cellosolve, etc.

For calculation and estimation purposes, it is assumed that all emissions consist of methyl ethyl ketone (MEK). Air is saturated with MEK vapors as drums are being filled. Temperature of emissions is 40°C and ideal behavior is applicable.

Waste paint material recycled	=	20,000 gals/yr
Assume saturated air displaced	=	volume of material recycled.
Vapor pressure of MEK at 40°C	=	188 mm Hg
Use ambient pressure	=	640 mm Hg
$\frac{188 \text{ mm Hg MEK}}{640 \text{ mm Hg Total}} \times \frac{20{,}000 \text{ Gal total}}{\text{Yr}}$	=	$5{,}875 \frac{\text{gal MEK Vapor}}{\text{Yr}}$

Density of MEK Vapor:

$$V = \frac{ZRT}{P}$$

Z is approximately = 1

$$V = 1 \times 998.9 \frac{(\text{mm Hg})\ (\text{cu ft})}{\text{Lb Mole}\quad {}^{\circ}\text{K}} \times \frac{(273+40)\,{}^{\circ}\text{K}}{640 \text{ mm Hg}}$$

$$= 488.5 \frac{\text{cu ft}}{\text{Lb Mole}}$$

4.2.4-895

Molecular Wt of MEK = $72.1 \frac{Lb}{Lb\ Mole}$

$$488.5 \frac{cu\ ft}{Lb\ Mole} \times \frac{Lb\ Mole}{72.1\ Lb} = 6.77 \frac{cu\ ft}{Lb}$$

Pounds of MEK emitted:

$$5{,}875 \frac{gal\ MEK\ vapor}{Yr} \times \frac{cu\ ft}{7.48\ gal} \times 6.77 \frac{Lb}{cu\ ft} = 116\ Lb\ MEK\ Vapor/yr$$

$$= 0.06\ ton/yr$$

Likewise, emissions from TCA solvent distillation unit may be calculated as follows:

Vapor pressure of TCE at 40°C = 233 mm Hg

TCE emissions $\frac{233}{640} \times 20{,}000$ = 7,281 gals/yr

Density of TCA $\frac{1 \times 998.9 \times 313}{640 \times 133.4}$ = $3.66 \frac{cu\ ft}{Lb}$

Pounds of TCE emitted $\frac{7{,}281}{7.48 \times 3.66}$ = 266 Lb/Yr

= 0.13 Ton/Yr

Note: TCE & freon are exempt solvents.

3. AIR CLEANING DEVICES:

Hydrocarbon emissions from distillation units will be controlled by use of water cooled shell and tube condensers.

4. EMISSION POINTS:

Distillation units have no stacks. Fugitive hydrocarbon emissions will be exhausted via building vent fan. The vent is approximately 20 ft high and two feet in diameter.

5. SAMPLE POINTS:

No sampling points are provided

6. OPERATING SCHEDULE:

These units may be operated 2-3 weeks a month depending on paint and solvent wastes inventory on hand.

Solvent Distillation Equipment

BCF Series

FINISH COMPANY, INC

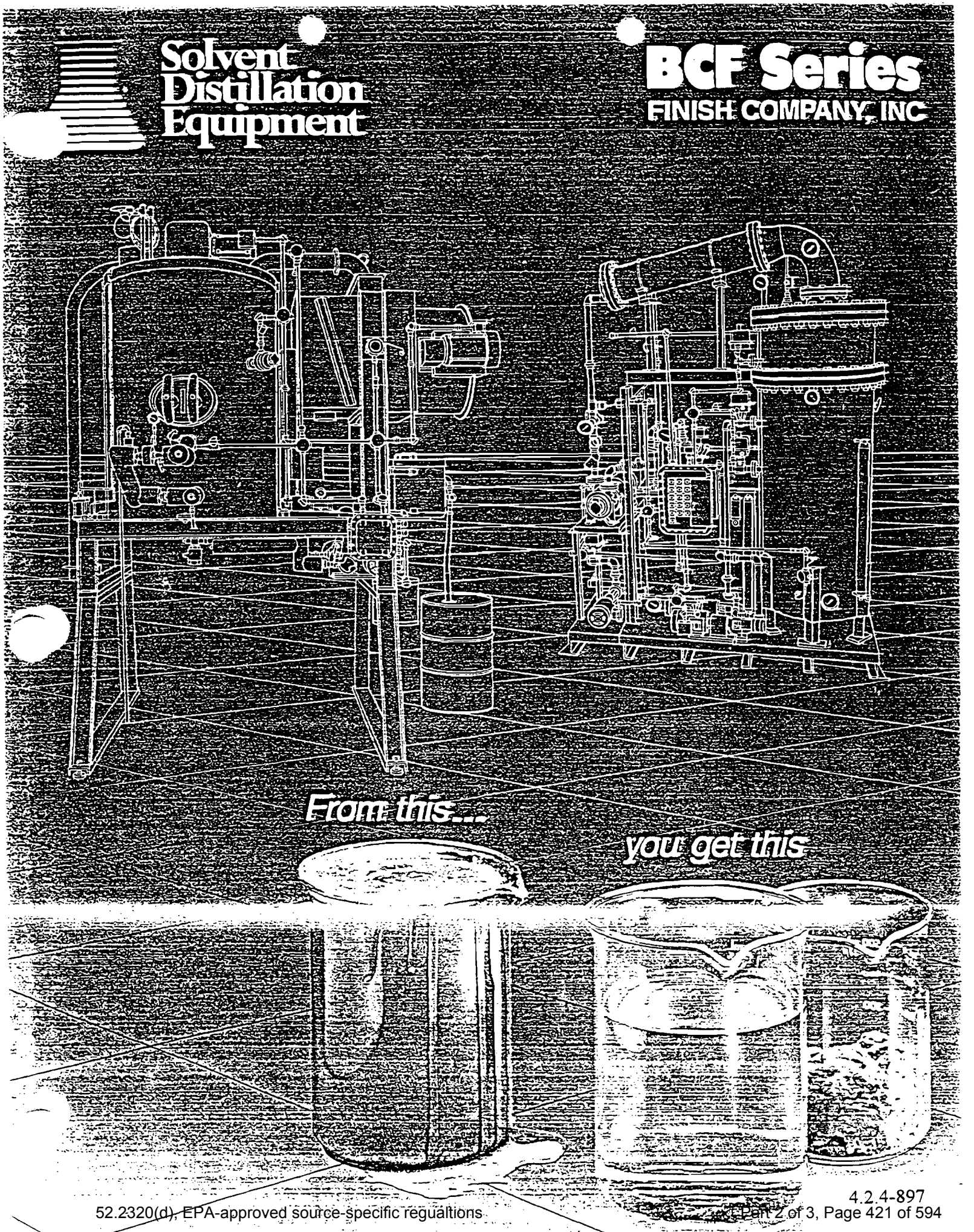

How it Works...

Automatic Fill Activated

Contaminated solvent is fed into the BCF boiling chamber one drum at a time or continuously from an existing solvent storage tank.

Solvent Heated

After a minimum liquid level is achieved within the boiling vessel, the heat source is circulated through our unique, integral steam coils. The heat source can be existing in-plant steam or produced by our pre-packaged steam boiler or thermal oil system.

Vapors Condensed

After a time period the solvent will boil and produce vapors which rise and leave the heat chamber through the vapor tube into the condenser. This air or water-cooled condenser will restore the vapors to a liquid state. The clean, clear solvent then gravity flows into a 55-gallon drum or automatically into an existing storage tank.

Cycle Repeated

The process is repeated several times as the unit automatically cycles between high and low level sensors. With each cycle, residue in the vessel bottom will become more viscous. This material is kept in suspension by four rotating scraper blades and our exclusive viscosity monitor/recirculation system until ready to gravity drain into a standard 55-gallon drum.

Automatic Shut-off

Should the supply of solvent terminate in the automatic operation, the unit will simply reclaim down to a low level sensor and shut off. In batch operation, the unit will shut off after each drum.

Special Applications

The BCF Model 600 is a special high output unit designed for waste solvent contaminated with little or no solids. It utilizes a twin heat exchanger system rather than integral steam coils and does not require scraper blades. The unit processes up to 200 gallons per hour.

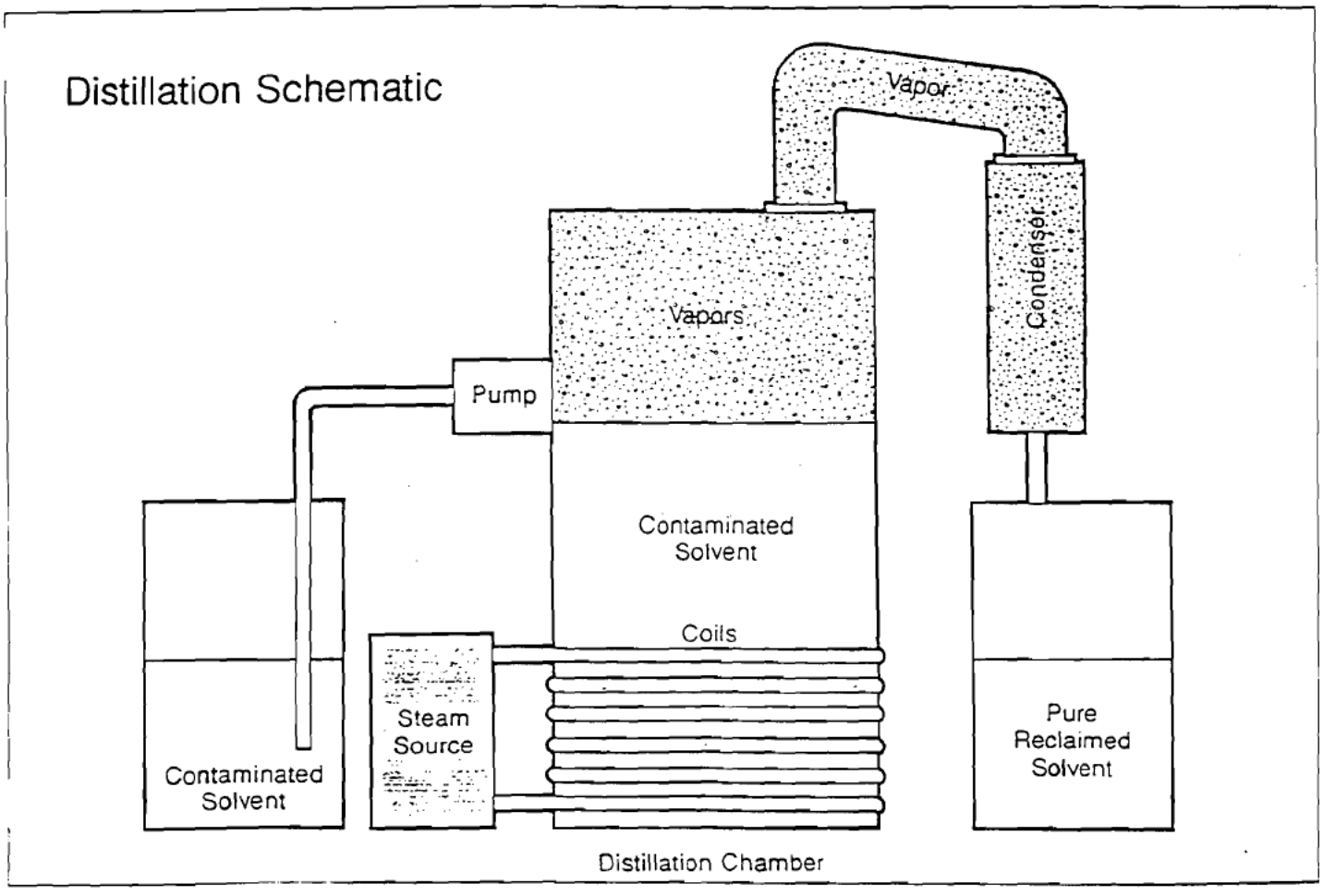

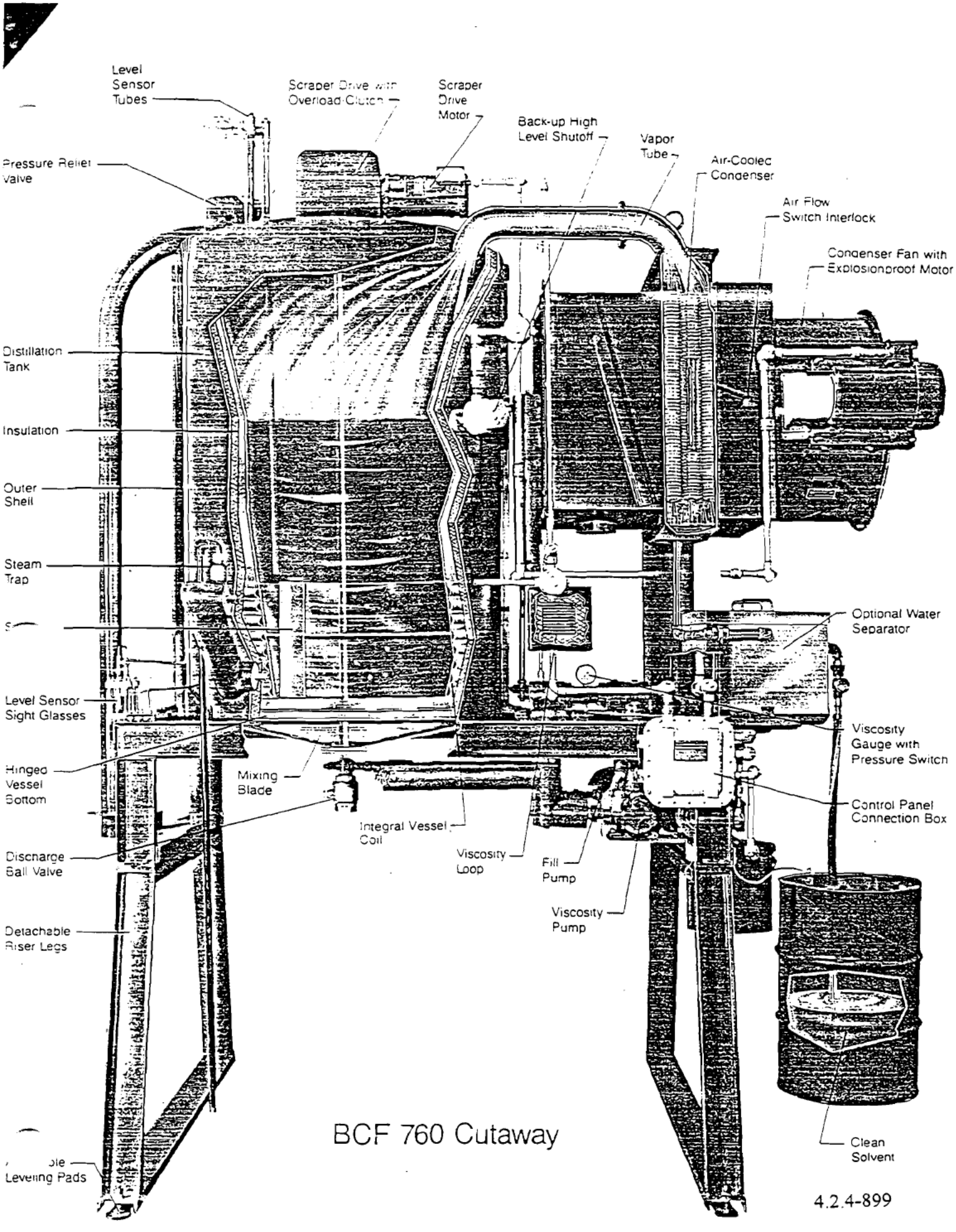
Level Sensor Tubes
Scraper Drive with Overload Clutch
Scraper Drive Motor
Back-up High Level Shutoff
Vapor Tube
Air-Cooled Condenser
Air Flow Switch Interlock
Condenser Fan with Explosionproof Motor
Pressure Relief Valve
Distillation Tank
Insulation
Outer Shell
Steam Trap
Optional Water Separator
Level Sensor Sight Glasses
Viscosity Gauge with Pressure Switch
Hinged Vessel Bottom
Mixing Blade
Control Panel Connection Box
Integral Vessel Coil
Discharge Ball Valve
Viscosity Loop
Fill Pump
Viscosity Pump
Detachable Riser Legs
Clean Solvent
Leveling Pads
BCF 760 Cutaway
4.2.4-899

BCF Series

Batch or Continuous Feed Distillation

Model 380

250 Gallons Per Shift

	380/760	380V/760V	380B/760B	380VB/760VB	600	600V	600B	600VB
Standard distillation	•	•	•	•	•	•	•	•
Vacuum distillation		•		•		•		•
Handles solvents with 100-320°F (38-160°C) boiling points	•	•	•	•	•	•	•	•
Handles solvents with 100-500°F (38-260°C) boiling points		•		•		•		•
Electric motor-powered scraper/agitator	•	•	•	•				
Liquid level controls	•	•	•	•	•	•	•	•
Internal viscosity indicator	•	•	•	•				
Steam-heated boiling jacket	•	•	•	•				
Shell-and-tube heat exchanger					•	•	•	•
Air-cooled condenser	•		•					
Water-cooled condenser	•	•	•	•	•	•	•	•
Boiling chamber access cleanout door	•	•	•	•				
2" drain valve (4" optional)	•	•	•	•	•	•	•	•
Actuated ball valve discharge (option on 380 and 760)					•	•	•	•
Differential temperature measurement	•	•	•	•				
Temperature controls	•	•	•	•	•	•	•	•
.75 psi relief valve	•		•		•		•	
2 psi relief valve		•		•		•		•
Fill pump timer	•	•	•	•	•	•	•	•
Separate remote electric controls panel (explosionproof controls on unit optional)	•	•	•	•	•	•	•	•
Standard relay logic or microprocessor control	•	•	•	•	•	•	•	•
Boiling chamber of carbon steel construction and full heat area insulation	•	•	•	•	•	•	•	•
Pump piping cleanout system	•	•	•	•	•	•	•	•
Automatic shutdown	•	•	•	•	•	•	•	•
Automatic cycle	•	•	•	•	•	•	•	•
Reclaimer liquid level and temperature indicators	•	•	•	•	•	•	•	•
All electricals to NEMA 7 explosionproof construction and Class 1, Division 1, Group D NEC, 220V or 440V, 3Ø	•	•	•	•	•	•	•	•
Vacuum design with selection switch, control valve, gauge, pump, reservoir tank		•		•		•		•
Utilizes existing steam source	•	•			•	•		
Pre[illegible]d steam boiler or thermal [illegible]			•	•			•	•
Optional stainless steel construction	•	•	•	•	•	•	•	•
Optional temperature and viscosity [illegible]	•	•	•	•				
Optional water separator	•	•	•	•	•	•	•	•

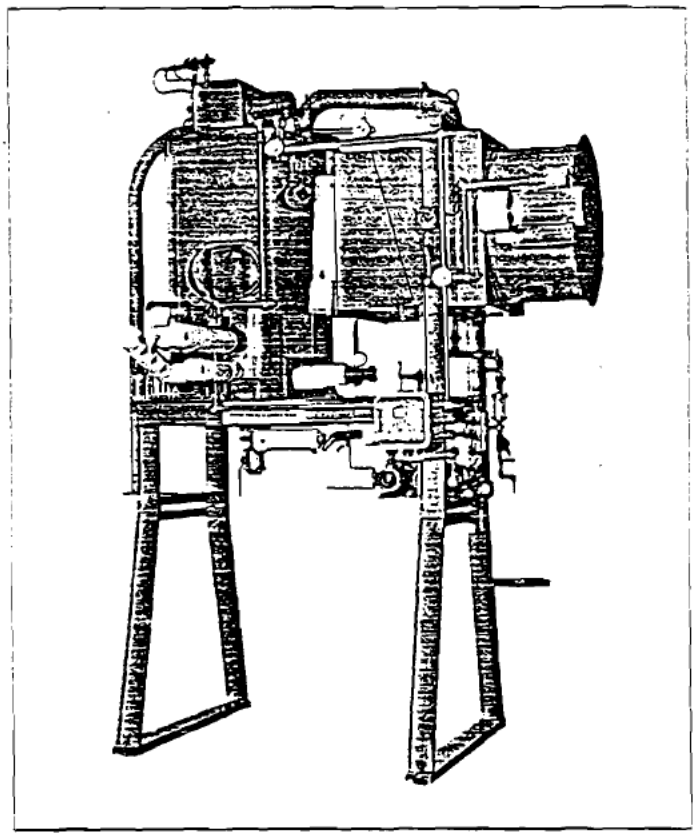

Specifications

BCF		380 (air)		380 (water)		380 (vacuum)	
Process Rate (gal/shift)		250		250		250	
Boiling Range	(°F)	100-320		100-320		100-500	
	(°C)	38-160		38-160		38-260	
Pressure Relief (PSI)		.75		.75		2	
Utility Requirements							
Water (GPM)		—		4-10		4-10	
Steam (lbs/hr)		100		100		100	
Electricity (KW)		12.5		12.5		16.5	
Unit Dimensions							
Length (in/mm)		100	2540	65	1651	90	2286
Width (in/mm)		60	1524	60	1524	60	1520
Height (in/mm)		135	3429	145	3683	135	3429
Weight (lbs/kg)		2000	907	2200	998	2000	907

Boiler	Electric		Fuel Oil		Natural Gas	
Utility Requirements	30 KW		1.5 GPH		175 SCFH	
Unit Dimensions						
Length (in/mm)	72	1829	72	1829	72	1829
Width (in/mm)	60	1524	60	1524	60	1524
Height (in/mm)	60	1524	85	2159	85	2159
Weight (lbs/kg)	1700	771	3000	1361	3000	1361

4.2.4-900

RX-35

RECYCLENE RX-35 SOLVENT RECOVERY SYSTEM

■ The RX-35 is a cost effective way to reduce your hazardous waste problems. Utilizing a patented design, the RX-35 allows you to purify (up to 99.5%) flammable and non-flammable solvents on-site safely and easily (as easy to operate as a washing machine). The RX-35, Recyclene's high production model, can usually pay for itself in less than a year if you generate 8 drums per month of waste solvent.

■ Fast payback—usually less than one year.

■ Reduces EPA liability—reclaims hazardous waste.

■ Simple to clean—patented disposable liner.

■ Easy to operate—push button control and gauges.

■ Safe to use—multiple shutdown controls and lid lock.

■ Multiple solvent applications—boiling points up to 400°F.

■ Explosion-proof construction—designed to meet NFPA specifications.

■ Optional automatic refill—for continuous operation.

■ Auto-quench and cooldown—activated when all solvent distilled.

1. Shell and Tube Condenser
2. Solvent Liner (Nylon or Teflon)
3. Teflon Gasket Seal
4. Dirty Solvent Drum
5. Oil-Immersed Rapid Cooling System
6. Stainless Steel Double Boiler
7. Oil-Immersed Resistance Heater
8. Air-Operated Pump for Autofill
9. Pneumatic Lid Foot Pedal
10. Multiple System Thermostats (Explosion-proof):
    a. Vapor
    b. Condenser
    c. Boiler
    d. Lid Interlock
    e. Safety
11. Main Contactor Box
12. Clean Solvent Drum
13. On/Off Controls and "Cycle On" Light Panel
14. Breather Vent
15. Vapor Temperature Gauge
16. Oil Temperature Gauge
17. Water Flow Meter

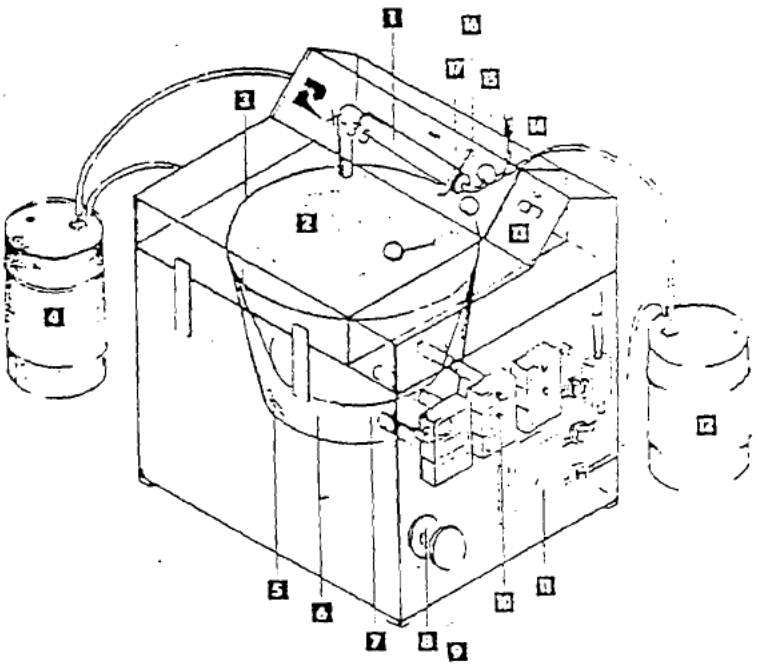

4.2.4-901

INTERMOUNTAIN ENVIRON
(801) 972-5965
3061 So. 3600 West #2
Salt Lake City, Utah 84127-0645