State	Utah
State Agency	Department of Environmental Quality
Affected Area	Hill AFB
Regulation	Source-specific requirements
Rule Number	Ozone NAAQS Approval Orders
Rule Title	BAQE-026-88, Approval Order for Paint Spray Booth in Bulding 1913 and Solvent Spray Booth in Building 1915, Davis County (1/20/1988)
State Effective Date	03/04/1997
State Adoption Date	02/05/1997
EPA Effective Date	08/18/1997
Notice of Final Rule Date	07/17/1997
Notice of Final Rule Citation	62 FR 38213
Comments	

Rule:

Hill AFB - DAQE-026-88.pdf

UTAH
DEPARTMENT OF HEALTH

Norman H. Bangerter,
Governor

Suzanne Dandoy, M.D., M.P.H.
Executive Director

BAQE-026-88

January 20, 1988

Thayne Judd, Colonel
United States Air Force
Department of the Air Force
Headquarters Ogden Air Logistics Center (AFLC)
Hill Air Force Base, Utah 84056

Dear Colonel Judd:

Re: Approval Order for Paint Spray Booth in Building 1913 and Solvent Spray Booth in Building 1915
Davis County, CDS A1

The above-referenced project has been evaluated and found to be consistent with the requirements of the Utah Air Conservation Regulations (UACR) and the Utah Air Conservation Act. A 30-day public comment period was held and all comments received were evaluated. The conditions of this approval order reflect any changes to the proposed conditions which resulted from the evaluation of the comments received. This air quality approval order authorizes the project with the following conditions:

1. Hill Air Force Base shall install the paint spray booths in Buildings 1913 and 1915 according to the information submitted in the notice of intent dated May 28, 1987 and additional information dated August 26, 1987.

2. The approved installations shall consist of the following equipment located at the site:

   A. Devilbiss booth, Model XDF-6342, with particulate filters in Building 1913

   B. Bleeker Brothers booth, Model VF-82, with air/grease filters type GF #2025, in Building 1915

Suzanne Dandoy, M.D.,M.P.H. • Office of the Executive Director

C. Other associated equipment

3. Visible emissions from any point or fugitive emission source associated with the installation or control facilities shall not exceed 20% opacity. Opacity observations of emissions from stationary sources shall be conducted in accordance with 40 CFR 60, Appendix A, Method 9. Opacity observations of intermittent sources shall use procedures similar to Method 9, but the requirement for observations to be made at 15-second intervals over a 6-minute period shall not apply. The opacity of any single reading shall not exceed 20% for intermittent sources.

4. All installations and facilities authorized by this approval order shall be adequately and properly maintained.

5. The Executive Secretary shall be notified upon start-up of the installation, as an initial compliance inspection is required.

6. Eighteen months from the date of this approval order the Executive Secretary shall be notified of the status of construction of this project.

7. The owner/operator shall not exceed the following usages of paints as shown below:

Booth 1913

Nitro cellulose lacquer Mill 19537C - 780 gallons per year
Poly mide prime Mill P 23377 - 780 gallons per year
Polyurethane Mill C-83286 - 780 gallons per year

Booth 1915

Stoddard solvent - 780 gallons per year

These values shall not be exceeded without prior approval in accordance with Section 3.1, UACR. Records of usage shall be kept for all periods when the plants are in operation. Records of usage shall be made available to the Executive Secretary upon request and shall include a period of two years ending with the date of the request. Records of usage for each booth shall be maintained at the booth in question.

Any future modifications to the equipment approved by this order must also be approved in accordance with Section 3.1.1, UACR.

The fee for issuing this approval order is $322.72. The amount (see enclosure for breakdown of costs) is payable to the Utah Department of Health, sent to the Executive Secretary, Utah Air Conservation Committee, 288 North 1460 West, P.O. Box 16690, Salt Lake City, Utah 84116-0690 and is due within 30 days after receipt of this approval order. Please return payment in the enclosed self-addressed envelope.

Sincerely,

F. Burnell Cordner

F. Burnell Cordner
Executive Secretary
Utah Air Conservation Committee

FBC/DK/pt

cc: EPA Region VIII (John Dale)
Davis County Health Department

Norman H. Bangerter

Suzanne Dandoy, M.D., M.P.H.
Executive Director

BAQ-5997-1

October 29, 1987

Newspaper Agency
Salt Lake Tribune
Legal Advertising Department
157 Regent Street
Salt Lake City, Utah 84111

Gentlemen:

This letter will confirm the authorization to publish the attached NOTICE in the Salt Lake Tribune and Deseret News on November 4, 1987.

Please mail the invoice and affidavit of publication to the Utah State Department of Health, Division of Environmental Health, Bureau of Air Quality, P.O. Box 16690, Salt Lake City, Utah 84116-0690.

Sincerely,

Sheri Holloway

Sheri Holloway
Engineering Section
Bureau of Air Quality

Kenneth L. Alkema, Director • Division of Environmental Health
Salt Lake City, Utah 84116-0690 • (801) 538-6121

N O T I C E

The following notices of intent to construct, submitted in accordance with Section 3.1, Utah Air Conservation Regulations, have been received for consideration by the Executive Secretary, Utah Air Conservation Committee:

1. Hill Air Force Base, Changes in Buildings 840, 268 and 509, Davis County; Paint Spray Booth in Building 1913 and Solvent Spray Booth in Building 1915, Davis County; Missile Maintenance Facility, Davis County; Paint Booth in Building 1133, Davis County; Seals on Storage Tanks, Refrigeration Unit on Vapor Degreaser, Davis County.
2. Morton Thiokol, Inc., T-97 Boiler and Third Boiler at M-72, Box Elder County; Fuel Conversion for 18 Boilers From Fuel Oil to Natural Gas, Box Elder County; T-111 and M-348 Boilers, Box Elder County.
3. Hatchco, Soda Ash Trans Loading Facility, Salt Lake County.
4. Redi Therm Insulation, Cellulose Insulation Plant, Salt Lake County.
5. Brasier Asphalt, Mobile Asphalt Plant.

The engineering evaluations and air quality impacts have been completed and no adverse air quality impacts are expected. No PSD increment consumed by these proposals. It is the intent of the Executive Secretary to approve the construction projects.

The construction proposals and estimates of the effect on local air quality are available for public inspection and comment at the Bureau of Air Quality, Utah State Department of Health, 288 North 1460 West, Salt Lake City, Utah 84116-0700. Written comments received by the Bureau, 288 North 1460 West, P.O. Box 16690, Salt Lake City, Utah 84116-0690, on or before December 4, 1987, will be considered in making the final decision on the approval or disapproval of the proposed construction.

If anyone so requests within 15 days of publication of notice, a hearing will be held in the area of the proposed construction, installation, modification, relocation or establishment.

Date of Notice: November 4, 1987

DK/sh

5996Q

UTAH DEPARTMENT OF HEALTH

Norman H. Bangerter

Suzanne Dandoy, M.D., M.P.H

BAQ-5997-1

October 29, 1987

Newspaper Agency
Salt Lake Tribune
Legal Advertising Department
157 Regent Street
Salt Lake City, Utah 84111

Gentlemen:

This letter will confirm the authorization to publish the attached NOTICE in the Salt Lake Tribune and Deseret News on November 4, 1987.

Please mail the invoice and affidavit of publication to the Utah State Department of Health, Division of Environmental Health, Bureau of Air Quality, P.O. Box 16690, Salt Lake City, Utah 84116-0690.

Sincerely,

Sheri Holloway

Sheri Holloway
Engineering Section
Bureau of Air Quality

288 North 1460 West • P.O. Box 16690 • Salt Lake City, Utah 84116-0690 • (801) 538-6121

N O T I C E

The following notices of intent to construct, submitted in accordance with Section 3.1, Utah Air Conservation Regulations, have been received for consideration by the Executive Secretary, Utah Air Conservation Committee:

1. Hill Air Force Base, Changes in Buildings 840, 268 and 509, Davis County; Paint Spray Booth in Building 1913 and Solvent Spray Booth in Building 1915, Davis County; Missile Maintenance Facility, Davis County; Paint Booth in Building 1133, Davis County; Seals on Storage Tanks, Refrigeration Unit on Vapor Degreaser, Davis County.
2. Morton Thiokol, Inc., T-97 Boiler and Third Boiler at M-72, Box Elder County; Fuel Conversion for 18 Boilers From Fuel Oil to Natural Gas, Box Elder County; T-111 and M-348 Boilers, Box Elder County.
3. Hatchco, Soda Ash Trans Loading Facility, Salt Lake County.
4. Redi Therm Insulation, Cellulose Insulation Plant, Salt Lake County.
5. Brasier Asphalt, Mobile Asphalt Plant.

The engineering evaluations and air quality impacts have been completed and no adverse air quality impacts are expected. No PSD increment consumed by these proposals. It is the intent of the Executive Secretary to approve the construction projects.

The construction proposals and estimates of the effect on local air quality are available for public inspection and comment at the Bureau of Air Quality, Utah State Department of Health, 288 North 1460 West, Salt Lake City, Utah 84116-0700. Written comments received by the Bureau, 288 North 1460 West, P.O. Box 16690, Salt Lake City, Utah 84116-0690, on or before December 4, 1987, will be considered in making the final decision on the approval or disapproval of the proposed construction.

If anyone so requests within 15 days of publication of notice, a hearing will be held in the area of the proposed construction, installation, modification, relocation or establishment.

Date of Notice: November 4, 1987

DK/sh

5996Q

GENERAL PURPOSE / 56 FRAME, EXPLOSION PROOF (T.E.F.C.)

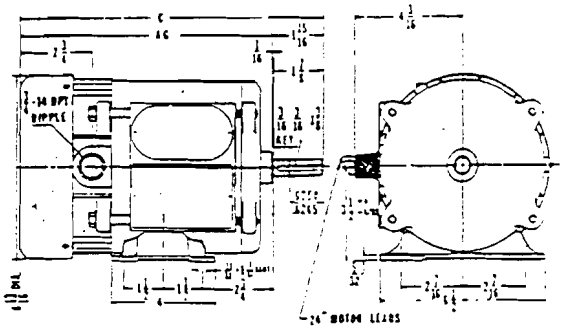

FRAME	AG	C
D56	9 11/16	11 5/8
F56	10 7/16	12 3/8
G56	10 15/16	12 7/8
H56	11 7/16	13 3/8
J56	11 15/16	13 7/8
K56	12 7/16	14 3/8
L56	12 15/16	14 7/8

GENERAL PURPOSE / 56H, 140T FRAME, EXPLOSION PROOF (T.E.F.C.)

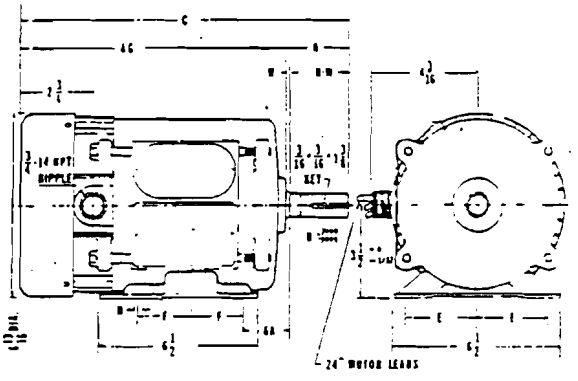

FRAME	C	E	F	H	N	N-W	U	W	AG	BA
H56H	13 3/8	2 7/16	1 1/2	11/32 x 1 7/32 SLOT	1 15/16	1 7/8	5/8	1/16	11 7/16	2 3/4
J56H	13 7/8								11 15/16	
K56H	14 3/8								12 7/16	
H143T	13 13/16	2 3/4	2	11/32	2 3/8	2 1/4	7/8	1/8	11 7/16	2 1/4
J145T	14 5/16		2 1/2						11 15/16	
K145T	14 13/16								12 7/16	
L145T	15 5/16								12 15/16	

32

See inside back cover for WARRANTY STATEMENT

hree Phase

ISIONS

xplosion Proof, Blue Chip™ Explosion Proof and XPW™

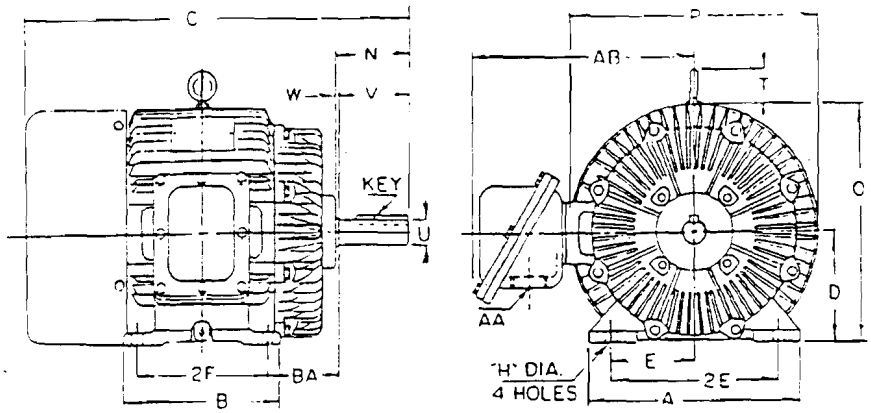

ll dimensions are approximate.
ertified prints available on request.

Frame	A (Max)	B (Max)	C	D	2E	2F	H	N	O	P	T	U	V	AA(2)	AB	BA	Key
143T	7.00	5.00	12.56	3.50	5.50	4.00	.34(1)	2.31	7.38	7.75	—	.87	2.12	.75	8.75	2.25	.19x.19x1.38
145T	7.00	6.00	13.56	3.50	5.50	5.00	.34(1)	2.31	7.38	7.75	—	.87	2.12	.75	8.75	2.25	.19x.19x1.38
182T	8.75	5.50	15.19	4.50	7.50	4.50	.44(1)	2.78	9.69	9.88	2.62	1.12	2.62	.75	9.69	2.75	.25x.25x1.75
	8.75	6.50	16.19	4.50	7.50	5.50	.44(1)	2.78	9.69	9.88	2.62	1.12	2.62	.75	9.69	2.75	.25x.25x1.75
	10.38	7.00	18.16	5.25	8.50	5.50	.44(1)	3.56	11.00	11.50	2.25	1.38	3.25	.75	10.88	3.50	.31x.31x2.38
21[illegible]	10.38	8.50	19.66	5.25	8.50	7.00	.44(1)	3.56	11.00	11.50	2.25	1.38	3.25	.75	10.88	3.50	.31x.31x2.38
254T	12.00	10.25	23.12	6.25	10.00	8.25	.53	4.19	12.62	12.75	3.12	1.62	3.87	1.25	11.69	4.25	.38x.38x2.87
256T	12.00	12.00	24.87	6.25	10.00	10.00	.53	4.19	12.62	12.75	3.12	1.62	3.87	1.25	11.69	4.25	.38x.38x2.87
284T	13.00	11.50	26.19	7.00	11.00	9.50	.53	4.81	14.75	15.50	3.12	1.87	4.50	1.50	13.00	4.75	.50x.50x3.25
284TS	13.00	11.50	24.81	7.00	11.00	9.50	.53	3.44	14.75	15.50	3.12	1.62	3.12	1.50	13.00	4.75	.38x.38x1.87
286T	13.00	13.00	27.69	7.00	11.00	11.00	.53	4.81	14.75	15.50	3.12	1.87	4.50	1.50	13.00	4.75	.50x.50x3.25
286TS	13.00	13.00	26.31	7.00	11.00	11.00	.53	3.44	14.75	15.50	3.12	1.62	3.12	1.50	13.00	4.75	.38x.38x1.87
324T	15.75	13.00	28.75	8.00	12.50	10.50	.66	5.50	17.12	18.25	3.12	2.12	5.12	2.00	14.12	5.25	.50x.50x3.87
324TS	15.75	13.00	27.25	8.00	12.50	10.50	.66	4.00	17.12	18.25	3.12	1.87	3.62	2.00	14.12	5.25	.50x.50x2.00
326T	15.75	14.50	30.25	8.00	12.50	12.00	.66	5.50	17.12	18.25	3.12	2.12	5.12	2.00	14.12	5.25	.50x.50x3.87
326TS	15.75	14.50	28.75	8.00	12.50	12.00	.66	4.00	17.12	18.25	3.12	1.87	3.62	2.00	14.12	5.25	.50x.50x2.00
364T	17.75	13.25	31.50	9.00	14.00	11.25	.66	6.12	19.00	20.00	3.62	2.38	5.62	3.00	17.75	5.87	.62x.62x4.25
364TS	17.75	13.25	29.38	9.00	14.00	11.25	.66	4.00	19.00	20.00	3.62	1.87	3.50	3.00	17.75	5.87	.50x.50x2.00
365T	17.75	14.25	32.50	9.00	14.00	12.25	.66	6.12	19.00	20.00	3.62	2.38	5.62	3.00	17.75	5.87	.62x.62x4.25
365TS	17.75	14.25	30.38	9.00	14.00	12.25	.66	4.00	19.00	20.00	3.62	1.87	3.50	3.00	17.75	5.87	.50x.50x2.00
404T	19.25	14.75	35.62	10.00	16.00	12.25	.81	7.50	20.87	21.75	3.62	2.87	7.00	3.00	18.62	6.62	.75x.75x5.62
404TS	19.25	14.75	32.62	10.00	16.00	12.25	.81	4.50	20.87	21.75	3.62	2.12	4.00	3.00	18.62	6.62	.50x.50x2.75
405T	19.25	16.25	37.12	10.00	16.00	13.75	.81	7.50	20.87	21.75	3.62	2.87	7.00	3.00	21.50	6.62	.75x.75x5.62
405TS	19.25	16.25	34.12	10.00	16.00	13.75	.81	4.50	20.87	21.75	3.62	2.12	4.00	3.00	21.50	6.62	.50x.50x2.75
444T	21.50	18.00	41.25	11.00	18.00	14.50	.81	8.75	23.12	24.25	3.62	3.38	8.25	3.00	22.81	7.50	.87x.87x6.87
444TS	21.50	18.00	37.50	11.00	18.00	14.50	.81	5.00	23.12	24.25	3.62	2.38	4.50	3.00	22.81	7.50	.62x.62x3.00
445T	21.50	20.00	43.25	11.00	18.00	16.50	.81	8.75	23.12	24.25	3.62	3.38	8.25	3.00	22.81	7.50	.87x.87x6.87
445TS	21.50	20.00	39.50	11.00	18.00	16.50	.81	5.00	23.12	24.25	3.62	2.38	4.50	3.00	22.81	7.50	.62x.62x3.00

hole size.

Prices and data are subject to change without notice.

Three Phase

BLUE CHIP™ EXPLOSION PROOF

Class I Group D Only

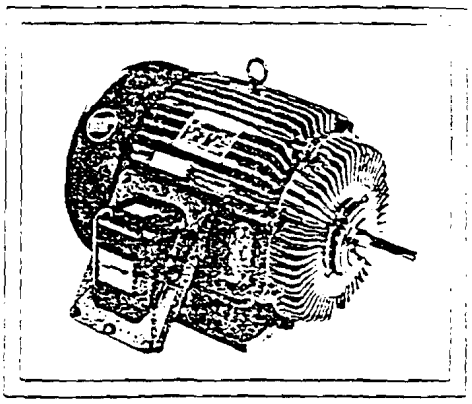

FEATURES

- All Cast Iron Construction[2]
- 1.15 Service Factor
- 60/50 Hertz (50 Hz at next lower HP rating at 190/380V or 380V)
- Extra Dips and Bakes
- Continuous Duty, 40° C Ambient
- Ball Bearing
- NEMA Design B
- Class F Insulation
- F-1 Assembly, Horizontal Mount
- 3/4 - 100 HP Suitable for PWS at 230 Volts; 125 - 200 HP Suitable for PWS at 460 Volts
- Drain and Breather in Shaft End Bracket
- Slinger
- 230 Volt Motors Operational on 208 Volt Networks
- UL Listed under File No. E12044
- Meets UL Frame Temperature Limit Code T2A
- CSA Certified under File Nos. LR 21839 and LR 47504

APPLICATIONS

For use in extra demanding, hazardous-duty applications where premium construction and performance features are required. Specially designed for use in the petroleum industries.

Discount Symbol N-3AP

HP	RPM	Volts[3]	Cat. No.	Model No.		List Price	Wt. Lbs.
3/4	1200	230/460	H557	143TTGS8076		$352.00	65
1	1800	230/460	H575	143TTGS8026	•	310.00	65
	1200	230/460	H558	145TTGS8076	•	364.00	70
	3600	230/460	H514	143TTGS8001	•	316.00	64
	1800	230/460	H531	145TTGS8026	•	334.00	72
	1200	230/460	H559	182TTGS8076	•	383.00	98
2	3600	230/460	H515	145TTGS8001	•	352.00	74
	1800	230/460	H532	145TTGS8027	•	358.00	75
	1200	230/460	H560	184TTGS8076	•	443.00	127
3	3600	230/460	H516	182TTGS8001	•	398.00	107
	1800	230/460	H533	182TTGS8026	•	419.00	105
	1200	230/460	H561	213TTGS8076	•	570.00	173
5	3600	230/460	H517	184TTGS8001	•	500.00	116
	1800	230/460	H534	184TTGS8026	•	467.00	116
	1200	230/460	H562	215TTGS8076	•	756.00	215
7½	3600	230/460	H518	213TTGS8001	•	640.00	185
	1800	230/460	H535	213TTGS8026	•	640.00	184
	1200	230/460	H563	254TTGS8076	•	1010.00	286
10	3600	230/460	H519	215TTGS8001	•	738.00	208
	1800	230/460	H536	215TTGS8026	•	760.00	219
	1200	230/460	H564	256TTGS8076	•	1237.00	287
15	3600	230/460	H520	254TTGS8001	•	986.00	265
	1800	230/460	H537	254TTGS8026	•	997.00	283
	1200	230/460	H565	284TTGS8076	•	1702.00	438
20	3600	230/460	H521	256TTGS8001	•	1265.00	370
	1800	230/460	H538	256TTGS8026	•	1211.00	327
	1200	230/460	H566	286TTGS8076	•	2008.00	498
25	3600	230/460	H522	284TSTGS8001[1]	•	1608.00	427
	1800	230/460	H539	284TTGS8026	•	1513.00	442
	1800	230/460	H540	284TSTGS8036[1]	•	1513.00	438
	1200	230/460	H567	324TTGS8076	•	2510.00	652
30	3600	230/460	H523	286TSTGS8001[1]	•	$1744.00	482
	1800	230/460	H541	286TTGS8026	•	1777.00	485
	1800	230/460	H542	286TSTGS8036[1]	•	1777.00	479
	1200	230/460	H568	326TTGS8076	•	2972.00	705
40	3600	230/460	H524	324TSTGS8001[1]	•	2333.00	640
	1800	230/460	H543	324TTGS8026	•	2348.00	658
	1800	230/460	H544	324TSTGS8036[1]	•	2348.00	652
	1200	230/460	H569	364TTGS8086	•	3920.00	845
50	3600	230/460	H525	326TSTGS8001[1]	•	3074.00	715
	1800	230/460	H545	326TTGS8026	•	2903.00	729
	1800	230/460	H546	326TSTGS8036[1]	•	2903.00	724
	1200	230/460	H570	365TTGS8086	•	4480.00	908
60	3600	230/460	H526	364TSTGS8001[1]	•	4467.00	830
	1800	230/460	H547	364TTGS8036	•	4310.00	865
	1800	230/460	H548	364TSTGS8026[1]	•	4310.00	861
	1200	230/460	H571	404TTGS8086	•	5284.00	1144
75	3600	230/460	H527	365TSTGS8001[1]	•	5209.00	870
	1800	230/460	H549	365TTGS8036	•	5349.00	997
	1800	230/460	H550	365TSTGS8026[1]	•	5349.00	992
	1200	230/460	H572	405TTGS8086	•	6194.00	1289
100	3600	230/460	H528	405TSTGS8001[1]	•	7023.00	1270
	1800	230/460	H551	405TTGS8036	•	6528.00	1390
	1800	230/460	H552	405TSTGS8026[1]	•	6528.00	1387
	1200	230/460	H573	444TTGS8086	•	8695.00	1840
125	3600	460	H529	444TSTGS8001[1]	•	9777.00	1800
	1800	460	H553	444TTGS8036	•	8488.00	1912
	1800	460	H554	444TSTGS8026[1]	•	8488.00	1910
	1200	460	H574	445TTGS8086	•	10349.00	2030
150	3600	460	H530	445TSTGS8001[1]	•	11500.00	1994
	1800	460	H555	445TTGS8036	•	10094.00	2060
	1800	460	H556	445TSTGS8026[1]	•	10094.00	2054
200	1800	460	H576	445TTGS8038		11990.00	2132

(1) Short shaft.
(2) 143T and 145T Frame motors have rolled steel fan guards
200 volt and 575 volt motors are also available at the same list price.

CAUTION: Class I Group D only motors should not be used where vapors or gases with an ignition temperature of 280° C or less are present.

4.2.4-940

For dimensions, see page 42.
For performance, see page 51.

• Normally Stocked

Prices and data subject to change without notice.
Printed in U.S.A.

52.2520(d), EPA approved source-specific regualtions

MARATHON ELECTRIC

Binks MODELS 31 and 31V FLOW GUNS
MAXIMUM WORKING PRESSURE 1500 PSI 105.45 kg/cm²

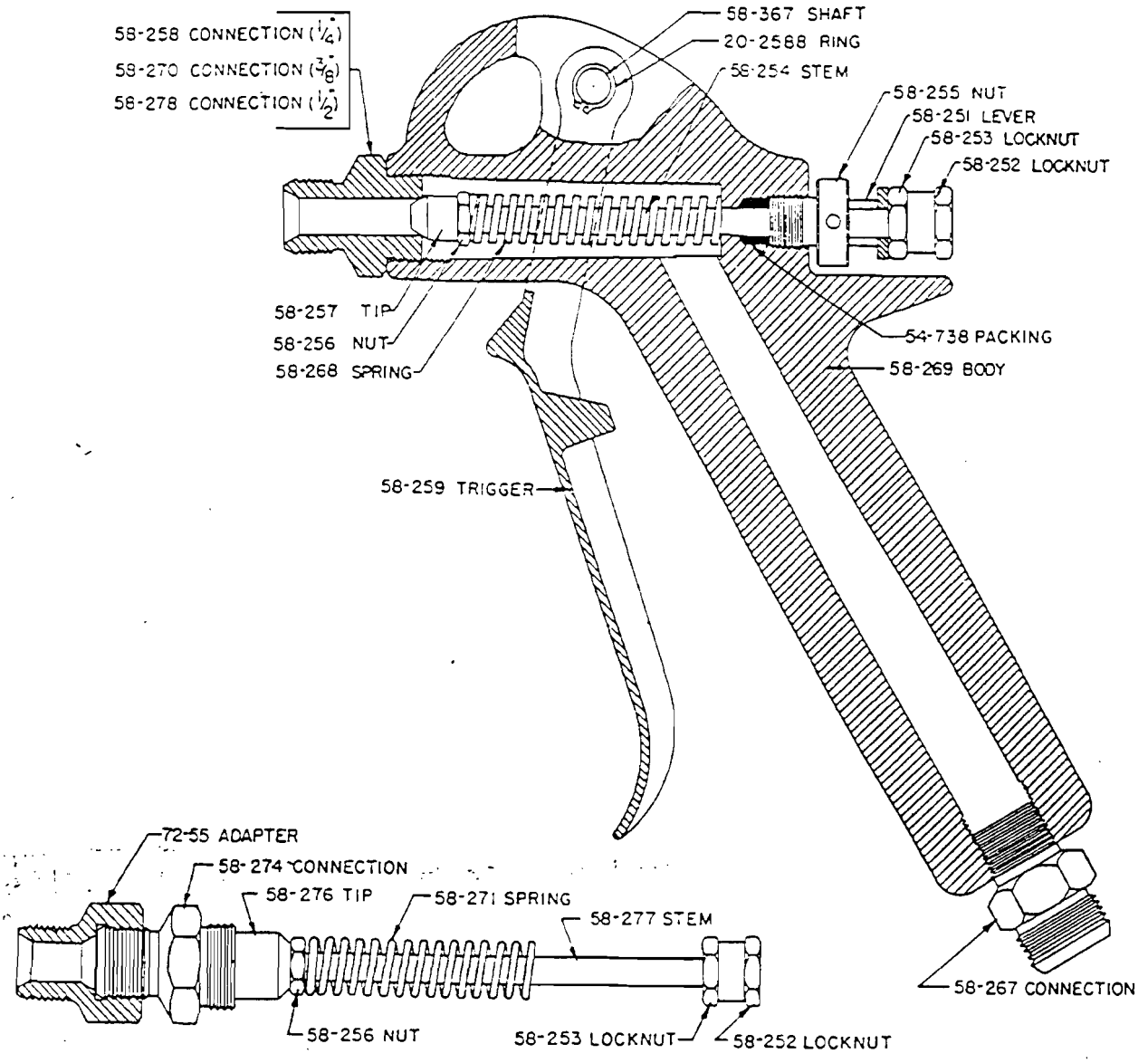

FOR MODEL 31V GUN

PARTS LIST

Part No.	Description	Qty.	Part No.	Description	Qty.
20-2588	Retainer Ring	2	58-267	Fluid Connection	1
54-738	Stem Packing	3	58-268	Stem Spring (31)	1
58-251	Trigger Lever	1	58-269	Gun Body	1
58-252	Rear Lock Nut	1	58-270	Connection, 3/8 N.P.S. (31)	1
58-253	Front Lock Nut	1	58-271	Stem Spring (31V)	1
58-254	Needle Stem (31)	1	58-274	Nozzle Connection (31V)	1
58-255	Packing Nut	1	58-276	Needle Tip (31V)	1
58-256	Needle Tip Nut	1	58-277	Needle Stem (31V)	1
58-257	Needle Tip (31)	1	58-278	1/2 Connection, 1/2 N.P.S. (31)	1
58-258	Connection, 1/4 N.P.S. (31)	1	58-367	Shaft	1
58-259	Trigger	1	72-55	Adapter	1

NOTICE OF INTENT TO CONSTRUCT

NEW SOLVENT BOOTH IN BLDG 1915

HILL AIR FORCE BASE, UTAH

1. PROJECT DESCRIPTION:

The proposed action provides for installation of a new solvent booth in Building 1915 for spraying miscellaneous missile components. The spray booth is a Bleeker-VF-8 4' H x 8' W x 5' D working area, complete with exhaust chamber filters. Attached is a copy of the manufacturer's specifications for this booth. At a face velocity of 190 feet/minute, the air flow rate at 1/4" sp. is estimated to be 6,370 cfm.

2. POLLUTANT EMISSIONS:

The primary source of air pollutants from the spray booth are solvent particulates and hydrocarbon vapors. Using EPA Publication AP-42 method for calculating solvent losses, the emissions from these sources are calculated as follows:

a. TYPE OF SOLVENT: Stoddard Solvent, PD 680.(2).

DENSITY: 6.5 lb/gal

METHOD OF APPLICATION: Pressure atomization.

PERCENT VOLATILE: 99%

AMOUNT: 15 gal/week

b. $$\frac{(6.5\ \text{lb/gal})\ (15\ \text{Gal/Week})\ (52\ \text{weeks/yr})\ (.99\ \text{vol})}{2{,}000\ \text{lbs/ton}}$$

Total Voc Emission = 2.5 ton/yr.

3. AIR CLEANING DEVICES:

Multi-purpose air/grease filter type GF #AG2025.

4. EMISSION POINTS:

A 24" dia. duct will be discharging approximately by 6370 cfm at 33' above ground.

5. SAMPLE POINTS:

No sampling points are anticipated.

6. OPERATING SCHEDULE:

The proposed facilities will normally be operated 8 hours on day shift, 5 days a week, 52 weeks per year.

Bleeker Bros.

10868 DRURY LANE LYNWOOD, CALIFORNIA 90262
(213) 639-4367 • (213) 636-7967 • (714) 994-1712

LOCATED IN BLDG 1915

OPERATING & MAINTENANCE INSTRUCTIONS
FOR
VARSOL CLEANING BOOTH.

BUYER: HILL-AFB-UT.

JOB NO: C-3645

ORDER # F4265D87M0601

SHIPPED: 12/29 [illegible]
67/67/10

PO# 599163784

OPERATING & MAINTENANCE INSTRUCTIONS

FOR

VARSOL CLEANING BOOTH.

After the Varsol Booth has been erected, the following procedure should be used, to place the booth in operation.

1. Clean the plenum as well as the working area from any debris.

2. Install Metal Exhaust Filters and lock same in place.

3. Check the Manometer (draft gauge).

   a. Manometer is installed per instructions.
   b. Red Gauge oil is filled in.
   c. Set Manometer to zero.

4. Check Fan and "V" Belt drive.

   a. Fan and Motor should turn easily by hand.
   b. The Fan Bearings are pre-lubricated and sealed and require no servicing for the life of the bearing.
   c. The Fan blade should be inspected periodically for deposits which may unbalance the blade, causing excessive vibration and possible breakage.

5. Check Recirculating pump units.

   a. The pump unit should turn easily by hand. If it does not, the coupling may be out of alignment. Check these points carefully.

6. For any special Spray equipment, refer to the attached instruction.

Regular cleaning and maintenance schedules should be set up and adhere to, to obtain the maximum efficiency of the booth. These schedules will depend on the production of work and the type of Varsol that is being sprayed.

4.2.4-947

Bleeker Bros.

10868 DRURY LANE LYNWOOD, CALIFORNIA 90262
(213) 639-4367 • (213) 636-7967 • (714) 994-1712

BUYER HILL AFB UT
JOB NO. C-3645
DATE 11/26/86

BOOTH MODEL VF-8
DRAWING NO. CS-358

MATERIAL LIST

NO	ITEM	QTY	DESCRIPTION
	1	2	REAR WALL PANEL - 26" x 50" (1-RH & 1-LH)
	2	2	SIDE WALL PANELS 30" x 50" (1-RH & 1-LH) W/EXTRA HOLES
	3	2	SIDE WALL PANELS - 30" x 50"
	4	1	BOXED PANEL - 30" x 48" W/24" HOLE
	5	2	BOXED PANELS - 30" x 48" W/(1) - 24" x 24" WINDOW
	6	1	FIRE CURTAIN - 96" long
	7	4	BENCH LEGS - 30" long
	8	2	BOXED PANELS - 24" x 30"
	9	2	PANELS - 24" x 50"
	10	2	FILTER BANKS 48" x 55" W/(2) - 20" x 25" CELLS
	11	1	PARTITION - 50" x 52"
	12	1	BENCH COLLECTING PAN - 60" x 100"
	13	1	COLLECTING TANK - 24" x 24" x 23" HIGH
	14	2	PCS - OBSCURE WIRE GLASS - 17-1/2" x 17-1/2"
	15	1	ROLL - 1/4" x 1/2" RUBBER GASKET MATERIAL
	16	4	WINDOW HOLD DOWNs - 18" long
	17	4	METAL FILTERS - 20" x 25" x 2"
	18	2	300 WATT INCAND. FIXTURES (EXPLOSION PROOF)
	19	2	MOUNTING BRACKETS
	20	1	24" DIA. EXHAUST FAN
	21	1	1 H.P. EXPL. PROOF MOTOR 230/460V, 60C, 3-PHASE
52	22	1	PULLEY/COMPONENT PART FOR MOTOR
74	23	1	BUSHING/COMPONENT PART FOR MOTOR
72	24	1	V-BELT/COMPONENT PART FOR MOTOR
	25	1	BELT GUARD
77	26	2	GEAR PUMP ASSEMBLIES
	27	2	1/2" H.P. EXPL. PR. MOTOR - 230/460V, 60C, 3-PHASE
	28	2	MANIFOLD & PIPE ASSEMBLIES
	29	2	1/4" HOSE ASSEMBLIES
	30	2	# 31 - SPRAY GUNS W/58 - 139 NOZZLES
	31	2	GUN HOOKS

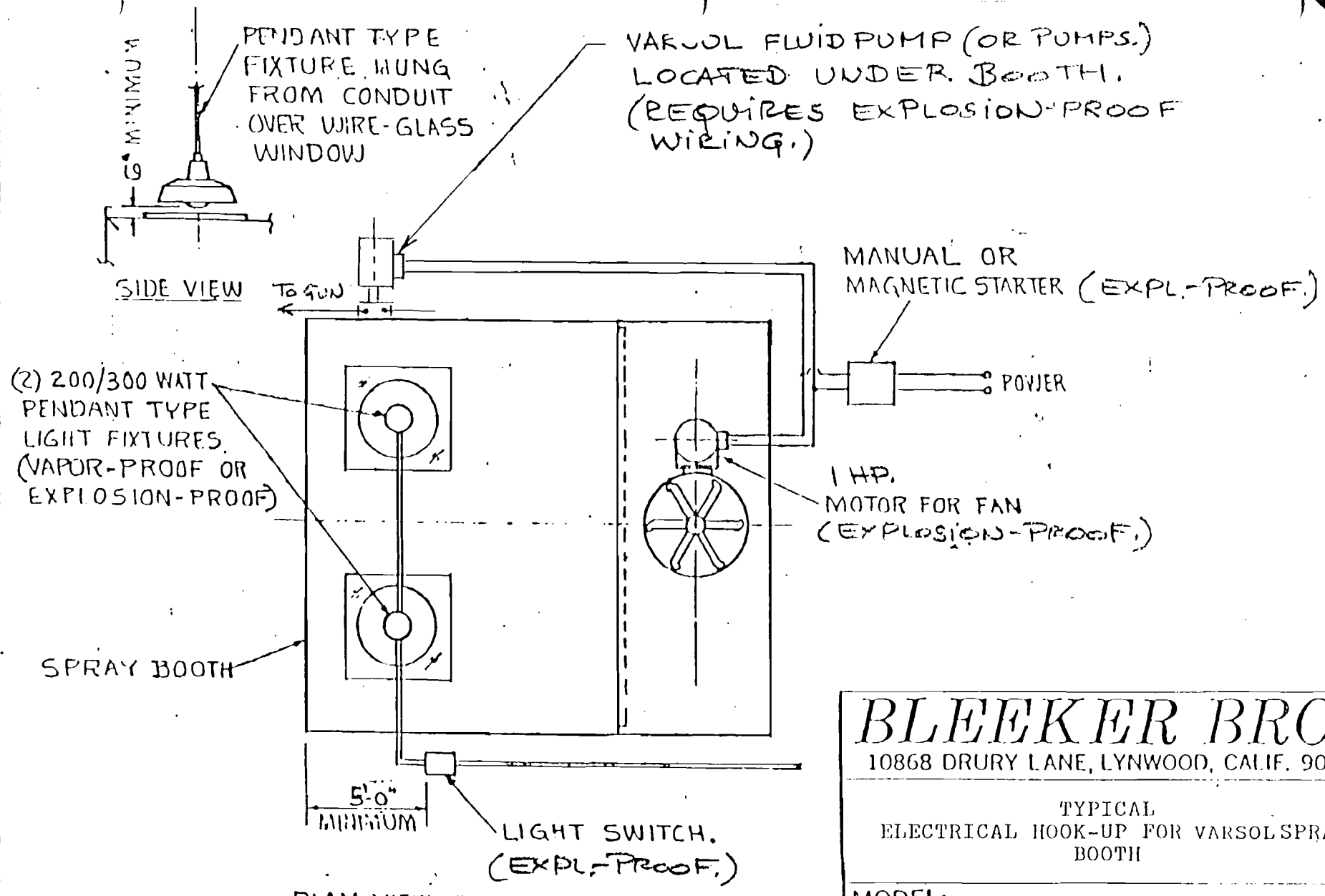

BLEEKER BROS.
10868 DRURY LANE, LYNWOOD, CALIF. 90262

TYPICAL
ELECTRICAL HOOK-UP FOR VARSOL SPRAY BOOTH

MODEL:

DATE 4-85	DRAWN BY F.H.M.	DWG. NO.
SCALE	JOB #	A-36-E

TEEL ALL-BRONZE ROTARY GEAR PUMPS

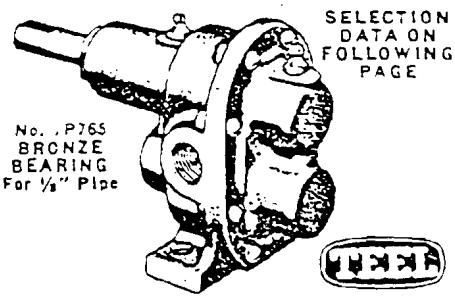

SELECTION DATA ON FOLLOWING PAGE

No. 1P765 BRONZE BEARING For ⅛" Pipe

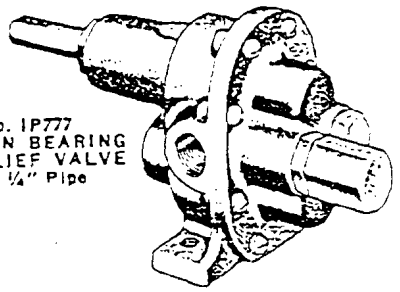

No. 1P777 CARBON BEARING W/RELIEF VALVE For ¼" Pipe

Positive displacement pumps handle clear flammable fluids that are abrasive-free and chemically compatible with stainless steel shaft and bronze and graphite asbestos packing. Pumps are compatible with acidic solutions, rather than caustics; however not necessarily compatible with all acidic solutions. Designed for spraying, recirculating, cleaning or general transfer application where high pressures are required. Temperature range —40°F to + 210°F. ⅛ to 1" pipe size. Capacity from 1 to 24 GPM. Maximum pressure is 100 PSI. Pumps can be direct coupled with motor, power take-off, or belt drive; use of ball bearing pillow block recommended if pump is belt-driven. Pumps have Type 303 stainless steel shafts with bronze or carbon-graphite bearings; latter also with or without adjustable relief valve. Bronze bearing models designed for light intermittent service or continuous duty applications with low pressure needs. These models have Zerk type grease fittings for periodic lubrication. Carbon bearing pumps are designed for continuous service at high pressures: never need lubrication. These are available with or without a relief valve. On models having the relief valve, the valve is adjustable. Valve provides pressure relief by allowing liquid to recirculate, thus avoiding damage when blockage of discharge line occurs for less than 1 minute. If blockage can be expected longer than 1 minute, an external relief valve is required. See listing under Relief Valves in Index.

PUMP PERFORMANCE AND MOTOR HP REQUIRED FOR WATER @ 60 TO 90°F.

Pipe Size	Pump RPM*	Free Flow GPM	Free Flow HP	20 PSI GPM	20 PSI HP	40 PSI GPM	40 PSI HP	60 PSI GPM	60 PSI HP	80 PSI GPM	80 PSI HP	100 PSI GPM	100 PSI HP
1/8"	900	1.2	⅙	1.0	⅙	0.8	⅙	0.4	¼	0.2	¼	—	—
	1200	1.6	⅙	1.3	⅙	1.1	¼	0.9	¼	0.6	⅓	0.3	⅓
	1725	2.2	⅙	2.0	¼	1.8	¼	1.5	⅓	1.3	⅓	1.0	½
1/4"	900	2.2	⅙	1.8	⅙	1.5	¼	1.2	¼	1.0	⅓	0.8	⅓
	1200	2.9	⅙	2.5	¼	2.2	⅓	2.0	⅓	1.8	½	1.6	½
	1725	3.8	¼	3.7	⅓	3.5	½	3.2	½	3.0	¾	2.8	¾
3/8"	900	4.1	⅙	3.6	¼	3.2	⅓	2.8	½	2.4	½	2.1	¾
	1200	5.5	⅙	5.0	⅓	4.7	½	4.3	½	3.9	¾	3.5	¾
	1725	7.0	⅓	6.9	½	6.9	¾	6.8	1	6.8	1½	6.6	1½
1/2"	900	5.4	¼	4.9	⅓	4.4	½	4.0	½	3.6	¾	3.3	¾
	1200	7.5	¼	7.0	⅓	6.5	½	6.0	¾	5.6	1	5.2	1
	1725	11.3	⅓	10.8	½	10.3	¾	9.9	1	9.5	1½	8.9	1½
3/4"	900	10.3	½	9.8	¾	9.4	¾	9.0	1	8.5	1½	8.0	1½
	1200	13.8	½	13.3	¾	13.0	1	12.6	1½	12.0	2	11.9	2
	1725	19.9	1	19.6	1½	19.4	1½	19.0	2	18.5	2	18.0	3
1"	900	12.5	½	12.3	½	12.1	¾	11.9	1	11.5	1½	11.0	2
	1200	16.6	½	16.4	¾	16.3	1	16.1	1½	15.6	2	15.2	2
	1725	24.0	1	24.0	1½	24.0	1½	23.9	2	23.4	3	23.1	3

(*) RPM and GPM are in proportion; ie., at 860 RPM, pump output is approx. ½ GPM figure for 1725 RPM.

BRONZE BEARING PUMPS WITHOUT RELIEF VALVE

Pipe Size	Shaft Diameter	Shaft Height	Overall H	Overall W	Overall L	Stock No.	Shpg. Wt.
1/8"	⅜"	1⅞"	2⅞"	2⅜"	6"	1P765	3
1/4	½	2 23/64	3⅝	3	6¼	1P766	4½
3/8	⅝	2⅝	4	3⅝	6⅝	1P767	6
1/2	⅝	2⅝	4	3⅝	7	1P768	6½
3/4	⅝	3 9/16	5¼	4	7	1P769	9
1	⅝	3 9/16	5¼	4	7½	1P770	10

CARBON BEARING PUMPS WITHOUT RELIEF VALVE

1/8"	⅜"	1⅞"	2⅞"	2⅜"	5¾"	1P771	3
1/4	½	2 23/64	3⅝	3	6¼	1P772	4
3/8	⅝	2⅝	4	3⅝	6⅝	1P773	5½
1/2	⅝	2⅝	4	3⅝	7	1P774	6
3/4	⅝	3 9/16	5¼	4	7	1P775	9
1	⅝	3 9/16	5¼	4	7¼	1P776	9½

CARBON BEARING PUMPS WITH RELIEF VALVE

1/4"	½"	2 23/64"	3⅝"	3"	7¼"	1P777	5
3/8	⅝	2⅝	4	3⅝	8	1P778	6
1/2	⅝	2⅝	4	3⅝	8⅜	1P779	7
3/4	⅝	3 9/16	5¼	4	8⅞	1P780	10
1	⅝	3 9/16	5¼	4	9⅛	1P781	11

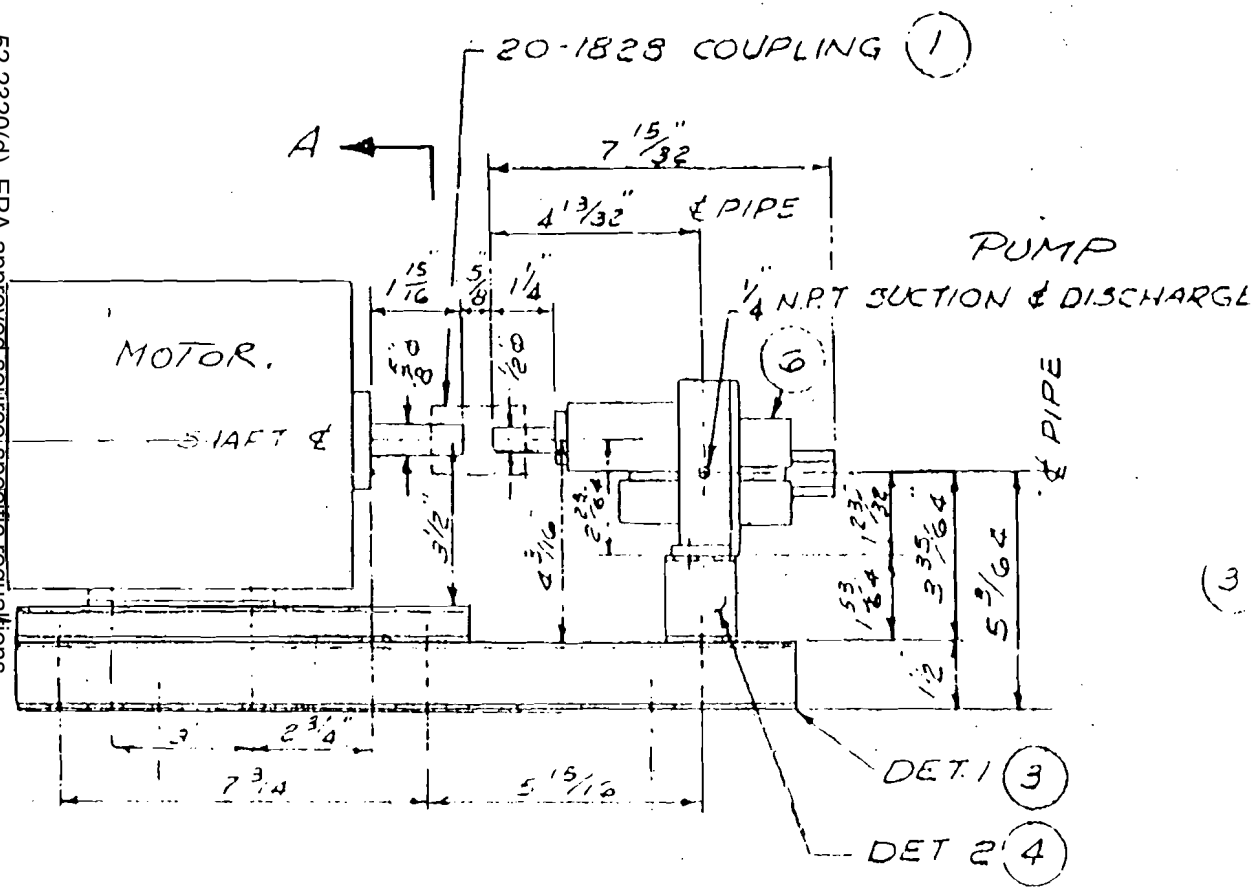

FRONT VIEW

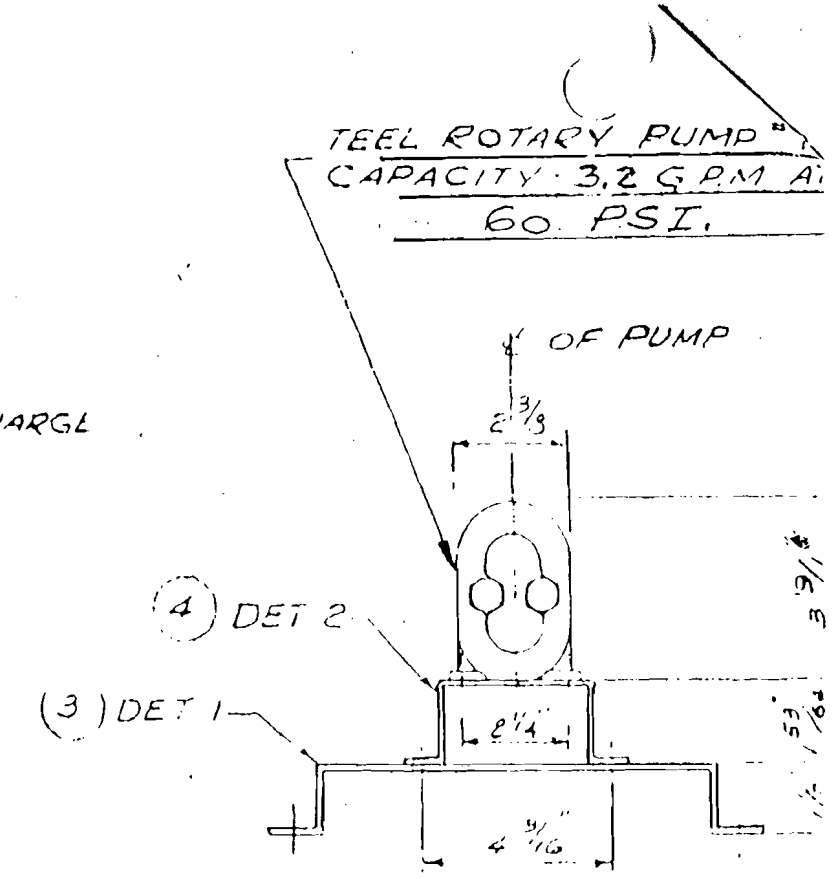

SIDE VIEW

PUMP ASSEMBLY

SCALE 3" = 1'-0"

12 TO 24" BELT-DRIVEN TUBEAXIAL FANS

For Positive Exhausting of Fumes and Vapors in Spray Booths and Other Hazardous Locations

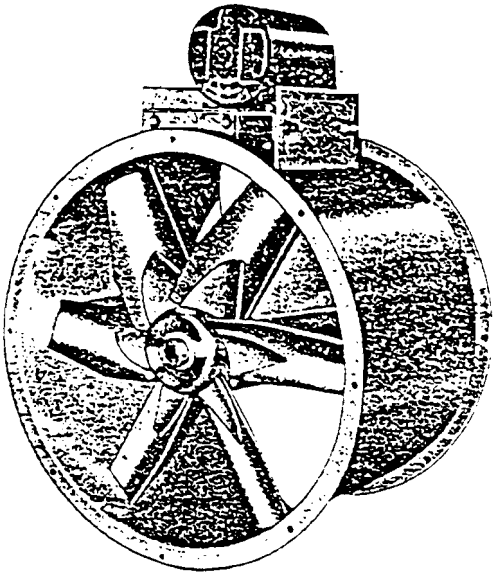

CERTIFIED RATINGS FOR AIR AND SOUND

Dayton Electric Mfg. Co. certifies that the tubeaxial fans shown herein are licensed to bear the AMCA Seal. The ratings shown are based on tests made in accordance with AMCA Standard 210 and AMCA Standard 300 and comply with the requirements of the AMCA Certified Ratings Program. Performance shown is for units with inlet duct and without outlet duct.

The sound power level ratings shown are in decibels referred to 10^{-12} watt. The sound ratings were obtained in accordance with AMCA Standard 300 test setup No. 4. The sound power A weighted levels Lw(A) were calculated in accordance with AMCA Standard 301. Values shown are the sound power levels at the fan inlet, A weighted.

TUBEAXIAL FAN PERFORMANCE DATA

Blade Dia.	CFM & Sound Power Lw (A) Decibels at Static Pressure Shown: Free Air	1/8" SP	1/4" SP	3/8" SP	1/2" SP	5/8" SP	3/4" SP	Single Phase Motors: Fan RPM	HP	Max. BHP†
12"	1300	1170	990	—	—	—	—	1670	¼	.254
	78	76	75	—	—	—	—			
	1520	1405	1280	1070	—	—	—	1946	⅓	.341
	82	81	80	79	—	—	—			
	1760	1660	1560	1440	1245	—	—	2253	½	.457
	86	85	84	83	84	—	—			
	2250	2170	2095	2010	1925	1825	1695	2877	¾	.772
	92	92	92	91	91	91	90			
16"	2040	1780	1190	—	—	—	—	1336	⅓	.304
	78	79	79	—	—	—	—			
	2750	2565	2350	2045	—	—	—	1800	½	.488
	86	86	87	87	—	—	—			
	3390	3245	3090	2910	2690	2337	—	2221	¾	.754
	92	92	92	92	93	93	—			
	3890	3760	3630	3490	3330	3140	2895	2547	1	1.032
	95	96	96	96	96	96	97			
18"	2850	2560	2195	—	—	—	—	1213	⅓	.325
	81	80	84	—	—	—	—			
	3495	3260	3000	2690	2110	—	—	1487	½	.525
	83	83	85	88	88	—	—			
	4040	3845	3625	3385	3115	2785	—	1719	¾	.708
	87	87	87	90	91	92	—			
	4670	4505	4320	4130	3920	3690	3435	1988	1	1.008
	91	91	91	92	94	95	96			
	5300	5155	5000	4830	4660	4475	4275	2255	1½	1.340
	94	95	94	94	95	97	98			
24"	7085	6745	6370	5955	5490	—	—	1312	1	1.008
	89	88	89	90	92	—	—			
	7915	7615	7285	6940	6555	6135	5655	1466	1½	1.405
	92	90	91	93	93	95	95			

CONVERSION FACTORS NECESSARY TO COMPUTE SOUND PRESSURE

Floor Area Square Feet	Distance to Work Station from Fan: 5'	10'	15'	20'
1000	5	6	7	7
10000	9	12	13	13
20000	10	13	14	15
40000	10	15	16	17

These conversion factors can be used to determine the approximate sound pressure level [dB(A)] for the above listed Dayton tubeaxial fans installed in your plant using the sound power levels (LwA) given above.

(†) Maximum horsepower required at air delivery shown. Includes drive losses.

AIR MOVING EQUIPMENT FUNDAMENTALS—See Pages 1108 and 1109 for discussion of the various types of air moving devices, their characteristics and glossary of terminology used throughout the industry and in this book.

5282320(d), EPA approved source-specific regulations
Part 2 of 3, Page 473 of 594
4.2.4-952

ASSEMBLY INSTRUCTIONS & PARTS LIST

TUBEAXIAL FANS

MODELS 3C411, 3C412, 3C413, 3C414, 3C415 & 3C416

FORM 5S2410
01120

DAYTON ELECTRIC MANUFACTURING CO. CHICAGO 60648

0981/288/1M

READ INSTRUCTIONS CAREFULLY BEFORE ATTEMPTING TO ASSEMBLE, INSTALL OR SERVICE DAYTON TUBEAXIAL FANS. FAILURE TO COMPLY WITH INSTRUCTIONS COULD RESULT IN PERSONAL INJURY AND/OR PROPERTY DAMAGE! RETAIN INSTRUCTIONS FOR FUTURE REFERENCE.

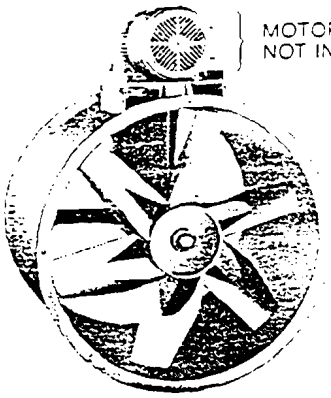

Figure 1

Description

Dayton tubeaxial fans are designed and built for use as an exhauster in paint spray booths, cleaning tanks, mixing rooms, etc. Can also be used in industrial ventilation systems handling temperatures up to a maximum of 200°F.

Motor, drive belts, and self-aligning sealed ball bearings are isolated from air stream so that contaminated air or vapors can be exhausted without damage to drive or motor.

Fan housing finished with a special zinc chromate primer and a coat of aklyd baked enamel.

CERTIFIED RATINGS FOR AIR AND SOUND

Dayton Electric Manufacturing Co. certifies that the tubeaxial fans shown herein are licensed to bear the AMCA Seal. The ratings shown are based on tests made in accordance with AMCA Standard 210 and AMCA Standard 300 and comply with the requirements of the AMCA Certified Ratings Program. Performance shown is for units with inlet duct and without outlet duct.

The sound power level ratings shown are in decibels referred to 10^{-12} watt. The sound ratings were obtained in accordance with AMCA Standard 300 test setup No. 4. The sound power A weighted levels Lw(A) were calculated in accordance with AMCA standard 301. Values shown are the sound power levels [illegible]

Unpacking

When unpacking, consider the following:

1. Double groove fan pulley with malleable split-taper bushing is assembled on fan.
2. Motor, motor pulley, and belts packed separately when fan is ordered complete.
3. Remove jack screws from cloth bag attached to motor mounting base for use in assembly.

General Safety Information

1. Follow all local electrical and safety codes, as well as the National Electrical Code (NEC) and the Occupational Safety and Health Act (OSHA).
2. Motor must be securely and adequately grounded. This can be accomplished by wiring with a grounded, metal-clad raceway system, by using a separate ground wire connected to the bare metal of the motor frame, or other suitable means.
3. Always disconnect power source before working on or near a motor or its connected load. If the power disconnect point is out-of-sight, lock it in the open position and tag to prevent unexpected application of power.
4. All moving parts should be guarded.
5. Be careful when touching the exterior of an operating motor — it may be hot enough to be painful or cause injury. With modern motors this condition is normal if operated at rated load and voltage — modern motors are built to operate at higher temperatures.
6. Make certain that the power source conforms to the requirements of your equipment.
7. Wiping or cleaning rags and other flammable waste materials must be placed in a tightly closed metal container and disposed of later in the proper fashion.
8. When cleaning electrical or electronic equipment, always use an approved cleaning agent such as dry cleaning solvent.

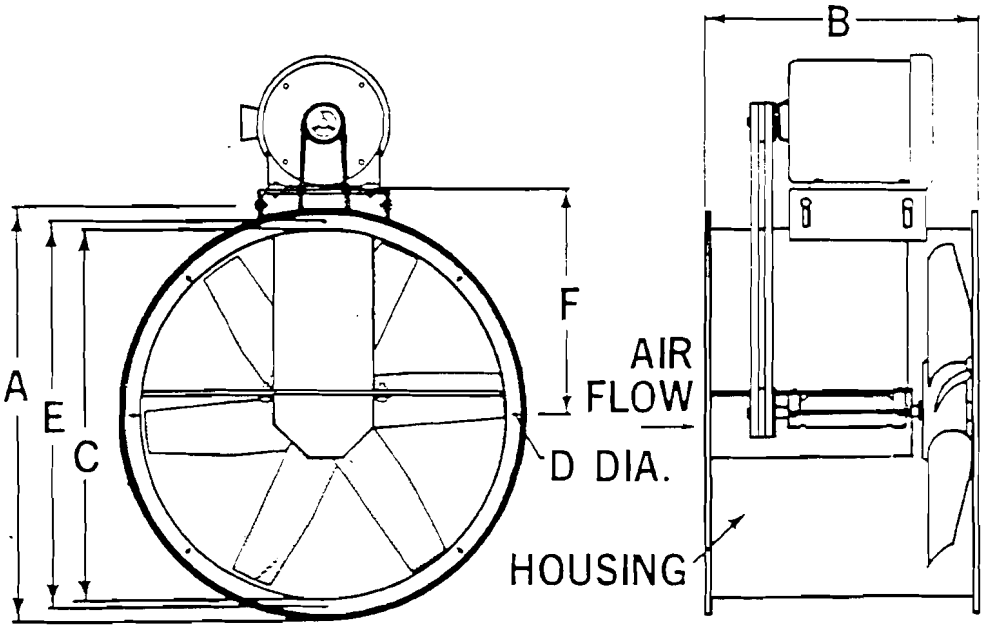

Figure 2

DIMENSIONS

MODELS	A	B	C	D	E	F	SHAFT DIA.
3C411	27.00	18.00	24-5/16	7/16	25-3/4	16-3/16	1
3C412	33-5/8	24.00	30-1/2	7/16	32-1/4	19-1/4	1-3/16
3C413	37-3/4	29.00	34-1/2	7/16	36-1/4	21-3/8	1-3/16
3C414	39-3/4	29.00	36-1/2	7/16	38-1/4	22-7/16	1-3/16
3C415	45-3/4	32.00	42-1/2	9/16	44-1/4	25-3/16	1-7/16
3C416	51-3/4	36.00	48-1/2	9/16	50-1/4	28-5/16	1-7/16

Specifications

	DRIVE REQUIREMENTS (‡)					
MODEL	MOTOR HP	FAN RPM	MOTOR SHEAVE BELT PITCH DIA.	RMA • BELT	FAN SHEAVE BELT PITCH DIA.	GROOVES
3C411	1½	1466	3.8-A V	A48	4.5-A	2
	2	1688	4.4-A	A50	4.5-A	2
	3	1910	5.0-A	A53	4.5-A	2
3C412	1½	1030	3.4-A	A55	5.8-A	2
	2	1146	3.8-A	A55	5.8-A	2
	3	1320	4.4-A	A60	5.8A	2
	5	1551	5.2-A	A60	5.8A	2
3C413	2	936	3.4-A	A60	6.4-A	2
	3	1074	3.8-A	A64	6.4A	2
	5	1251	4.6-A	A66	6.4-A	2
3C414	2	837	3.8-A	A66	8.0-A	2
	3	964	4.4-A	A71	8.0-A	2
	5	1133	5.2-A	A71	8.0-A	2
3C415	3	746	3.2-A	A71	7.6-A	2
	5	880	3.8-A	A75	7.6-A	2
	7½	1013	4.4-A	A75	7.6-A	2
	10	1147	5.0-A	A75	7.6-A	2
3C416	5	731	4.4-A	A85	10.6-A	2
	7½	827	5.0-A	A90	10.6-A	2
	10	891	5.4-A	A90	10.6-A	2

(‡) Drive requirements show minimum Motor HP required. Other drives may be used, provided they meet the Fan RPM stated above and have adequate load-carrying capacity.
(•) Rubber Manufacturer's Association.

LIMITED WARRANTY

Dayton tubeaxial fans, Models 3C411, 3C412, 3C413, 3C414, 3C415 & 3C416, are warranted by Dayton Electric Mfg. Co. (Dayton) to the original user against defects in workmanship or materials under normal use (rental use excluded), for one year after date of purchase. Any part which is determined to be defective in material or workmanship and returned to an authorized service location, as Dayton designates, shipping costs prepaid, will be repaired or replaced at Dayton's option. For warranty claim procedures, see "Prompt Disposition" below. This warranty gives purchasers specific legal rights; and purchasers may also have other rights which vary from state to state.

WARRANTY DISCLAIMER. Dayton has made a diligent effort to illustrate and describe the products in this literature accurately; however, such illustrations and descriptions are for the sole purpose of identification, and do not express or imply a warranty that the products are merchantable, or fit for a particular purpose, or that the products will necessarily conform to the illustrations or descriptions.

Except as provided below, no warranty or affirmation of fact, express or implied, other than as stated in "LIMITED WARRANTY" above is made or authorized by Dayton, and Dayton's liability in all events is limited to the purchase price paid.

Certain aspects of disclaimers are not applicable to consumer products; e.g., (a) some states do not allow the exclusion or limitation of incidental or consequential damages, so the above limitation or exclusion may not apply to you; (b) also, some states do not allow limitations on how long an implied warranty lasts, consequently the above limitation may not apply to you; and (c) by law, during the period of this Limited Warranty, any implied warranties of merchantability or fitness for a particular purpose applicable to consumer products purchased by consumers, may not be excluded or otherwise disclaimed.

PROMPT DISPOSITION. Dayton will make a good faith effort for prompt correction or other adjustment with respect to any product which proves to be defective within warranty. For any product believed to be defective within warranty, first write or call dealer from whom product was purchased. Dealer will give additional directions. If unable to resolve satisfactorily, write to Dayton at address below, giving dealer's name, address, date and number of dealer's invoice, and describing the nature of the defect. If product was damaged in transit to you, file claim with carrier.

DAYTON ELECTRIC MFG. CO., 5959 W. HOWARD ST.
CHICAGO, ILLINOIS 60648

Performance

Model	Blade Dia.	CFM & (Sound Power LW(A) decibels) at Static Pressure Shown									
		Free Air	1/8" S.P.	1/4" S.P.	1/2" S.P.	3/8" S.P.	1" S.P.	1-1/2" S.P.	Fan RPM	Motor HP	Max. BHP
3C411	24"	7915	7615	7285	6555	5655	—	—	1466	1-1/2	1.31
		92	90	91	93	95	—	—			
		9115	8860	8580	7985	7295	6490	—	1688	2	1.98
		95	94	94	95	98	99	—			
		10310	10090	9850	9335	8780	8155	7445	1910	3	2.87
		99	98	97	97	99	101	102			
3C412	30"	10955	10415	9815	8395	—	—	—	1020	1-1/2	1.40
		90	89	89	93						
		12190	11710	11180	9990	8485	—	—	1146	2	1.90
		93	94	94	93	95					
		14040	13630	13180	12220	11100	9740	—	1320	3	2.91
		98	96	96	96	99	99	—			
		16495	16150	15785	14995	14145	13190	12125	1551	5	4.72
		102	101	100	100	100	102	104			
3C413	34"	14430	13760	13020	11285	7155	—	—	936	2	1.83
		94	92	92	94	96	—				
		16560	15985	15350	13905	12305	7750	—	1074	3	2.78
		100	100	99	99	100	102				
		19290	18800	18280	17150	15880	14445	12180	1251	5	4.36
		101	102	101	100	100	102	103			
3C414	36"	15255	14453	13510	11430	—	—	—	837	2	1.82
		92	90	90	94						
		17570	16890	16135	14450	12345	—	—	964	3	2.79
		98	99	97	98	100					
		20650	20080	19460	18135	16600	14825	—	1133	5	4.53
		100	101	100	99	101	102				
3C415	42"	21465	20450	19275	16565	—	—	—	746	3	2.76
		90	91	92	95						
		25320	24460	23505	21435	18965	—	—	880	5	4.53
		98	98	98	98	99					
		29150	28410	27610	25900	23960	21775	18120	1013	7-1/2	6.88
		100	100	101	102	103	103	103			
		33000	32355	31670	30185	28620	26850	24920	1147	10	9.98
		103	104	104	105	106	107	107			
3C416	48"	31260	30070	28745	25810	22170	—	—	731	5	5.00
		100	99	98	99	100					
		35365	34325	33185	30780	37900	24390	—	827	7-1/2	7.25
		102	102	102	100	101	103				
		38100	37140	36105	33885	31380	28550	24060	891	10	9.04
		104	104	104	103	103	104	105			

Performance Notes

UTAH BUREAU OF AIR QUALITY
NEW/MODIFIED SOURCE PLAN REVIEW FOR:

Mr. Thayne Judd
Colonel, USAF
Department of the Air Force
Headquarters Ogden Air Logistics Center (AFLC)
Hill Air Force Base, Utah 84056

Re: Paint Spray Booth in Building 1913 and Solvent Spray Booth in Building 1915
Davis County, CDS A1

Date: September 16, 1987

Notice of Intent Dated: May 28, 1987

Plant Contact: Jay Gupta

Phone Number: (801) 777-2065

Plant Location: Hill Air Force Base, Utah

Filing Fee		=	$ 100.00
Review Engineer - total hours	9	($22.08/hr) =	$ 198.72
Modeler - total hours		($17.63/hr) =	$.
Computer time - total hours		($ 5.00/hr) =	$.
Notice To Paper		=	$ 24.00
Travel - total miles		($ 0.23/mile) =	$.
		Total =	$ 322.72

Approved by Compliance YSH 10/23/87

Approved by Section Manager DK 10/25/87

Approved by Executive Secretary ZOR 10/26/87

1069q

4.2.4-956

I. DESCRIPTION OF PROPOSAL

Hill Air Force Base has filed a notice of intent dated May 28, 1987, in which they intend to install a new paint booth in Building 1913 and a new one in Building 1915.

The booth in Building 1913 will be for spraying aircraft landing gear components. The booth has the following parameters:

1. Devilbiss Model XDF-6342
2. 14 feet wide by 15 feet deep
3. Face velocity - 125 feet per minute
4. 17,900 ACFM
5. Stack height - 31 feet
6. Stack diameter - 3.50 feet

The following types of paints will be used in this booth:

1. Nitro Cellulose Lacquer

   Mill - 19537c
   7.8 LB/GAL
   70% VOC
   3 gallons per day

2. Poly Mide Prime

   Mill - P 23377
   9.0 LB/GAL
   51% VOC
   3 gallons per day

3. Polyurethane

   Mill - C-83286
   9.20 LB/GAL
   56% VOC
   3 gallons per day

Particulate will be controlled by dry filters. Hours of operation are 2,080 per year.

The booth in Building 1915 will be used for spraying miscellaneous missile components. The booth has the following parameters:

1. Bleeker - VF-8
2. 4 feet high by 8 feet wide by 5 feet deep
3. Face velocity - 190 feet per minute
4. 6,370 ACFM
5. Stack height - 33 feet
6. Stack diameter - 2.0 feet

Stoddard solvent will be used in this booth. It has the following parameters:

1. 6.5 LB/GAL
2. 99% VOC
3. 15 gallons per week

This booth will use multipurpose air/grease filters, GF #AG2025. Hours of operation are 2,080 per year.

II. EMISSION SUMMARY

Hill Air Force Base is an existing major source. This notice of intent does not represent a major modification. The emissions are as follows:

TSP - 0.11 TON/YR
VOC - 8.42 TON/YR

III. BACT ANALYSIS

BACT for Building 1913

The proposed paint booth meets the requirements of BACT because:

1. The paint arrestor filter pads are rated at 95% efficient for collecting paint solids and aerosols. This is state-of-the-art for paint booth particulate control.

2. Low solvent paints have not been developed that will meet the specifications for aircraft service.

3. The VOC emissions are below 10 tons per year.

4. The cost of installation and operation of an incinerator for this quantity of low concentration VOCs would be excessive on a cost-per-ton-captured basis.

5. The cost of installation and operation of a carbon adsorption unit for this quantity of low concentration VOCs would be excessive on a cost-per-ton-captured basis.

BACT for Building 1915

The proposed paint booth meets the requirements of BACT because:

1. The booth configuration does not conform to the typical control technique for a cold solvent cleaner. The solvent is pumped through a nozzle to form a stream, not an atomized spray, that is directed at the parts to be cleaned. The used solvent is collected in a pan under a drain rack and then drains from the pan into an enclosed 25 gallon tank below the pan for recirculation. The enclosed tank would be as effective as a cover when not in use.

2. The estimated cost of installation and operation of a carbon adsorption unit or an incinerator for this quantity of low concentration VOCs would be excessive on a cost-per-ton-captured basis.

3. Particulate emissions are negligible from this emission point.

IV. APPLICABLE REGULATIONS

This notice of intent is for a modification to an existing major source. It is not a new major source or a major modification. It is not a PSD source. The following federal and state regulations have been examined to determine their applicability to this notice of intent:

1. Section 3.1.1, UACR - Notice of intent required for a modified source. This regulation applies.

2. Section 3.1.8, UACR - Application of BACT required at all emission points. This regulation applies.

3. Section 3.1.9, UACR - Rules for relocation of temporary sources. This source is a permanent source. Therefore, this regulation does not apply.

4. Section 3.2, UACR - Particulate emission limitations for existing sources which are located in a nonattainment area. Hill Air Force Base is listed in this regulation. However, only the boilers are covered. Therefore, this regulation will not apply to the paint booths.

5. Section 3.3.2, UACR - Review requirements for new major sources or major modifications which are located in a nonattainment area or which impact a nonattainment area. This source does not qualify as a new major source or a major modification. Therefore, this regulation will not apply to the paint booths.

6. Section 3.5, UACR - Emission inventory reporting requirements. This regulation requires any source which emits 25 tons or more per year of any pollutant to submit an emission inventory to the Bureau of Air Quality every year. This source must comply with this regulation.

7. Section 3.6.5(b), UACR - PSD review requirements for new major sources or major modifications. This source does not qualify as a new major source or a major modification under PSD rules. Therefore, this regulation does not apply.

8. Section 3.8, UACR - Stack height rule. This regulation limits the creditable height of stacks to that height determined to be good engineering practice. The formulas used to determine good

engineering practice are found in 40 CFR 51.1. A deminimus height of 65 meters (213.2 feet) is allowed. This source has no stacks which exceed 65 meters in height. It is in compliance with this regulation.

9. Section 3.11, UACR - Visibility screening analysis requirements. This regulation requires all new major sources or major modifications to undergo a visibility screening analysis to determine visibility impact on any mandatory Class I area. This source is not a new major source or a major modification under UACR rules. Therefore, this regulation does not apply.

10. Section 4.1.2, UACR - 20% opacity limitation at all emission points unless a more stringent limitation is required by NSPS or BACT or NESHAPS. In this case, the 20% opacity limitation applies.

11. Section 4.1.9, UACR - EPA Method 9 to be used for visible emission observations. This regulation applies.

12. Section 4.2.1, UACR - Sulfur content limitations in oil and coal used for combustion. This emission point does not use oil or coal for combustion. This regulation does not apply.

13. Section 4.7, UACR - Unavoidable breakdown reporting requirements. This regulation applies.

14. Section 4.9, UACR - Review requirements for VOC sources located in a nonattainment area for ozone. Section 4.9.6(g), UACR, will apply to these paint booths on an individual basis if the VOC emissions for either booth exceeds 10 tons per year. At the present time, they do not exceed 10 tons per year. For details on the regulatory requirements, consult the regulation.

15. Section 5, UACR - Emergency episode requirements. This regulation applies.

16. NSPS - there is no NSPS for this industrial process.

17. NESHAPS - There is no NESHAPS for this industrial process.

18. NAAQS - This source is located in Davis County which is a nonattainment area for ozone. The emission rates are small enough that the Bureau of Air Quality guidelines do not call for this source to be modeled for any pollutant. The modeling guidelines were developed to screen for sources which might show an ambient air impact. No new violation of the NAAQS for ozone should occur.

V. RECOMMENDED APPROVAL ORDER CONDITIONS

1. Hill Air Force Base shall install the paint spray booths in Buildings 1913 and 1915 according to the information submitted in

the notice of intent dated May 28, 1987, and additional information dated August 26, 1987.

2. The approved installations shall consist of the following equipment located at the site:

   A. Devilbiss booth, Model XDF-6342, with particulate filters in Building 1913.

   B. Bleeker Brothers booth, Model VF-82, with air/grease filters type GF #2025, in Building 1915.

   C. Other associated equipment.

3. Visible emissions from any point or fugitive emission source associated with the installation or control facilities shall not exceed 20% opacity. Opacity observations of emissions from stationary sources shall be conducted in accordance with 40 CFR 60, Appendix A, Method 9. Opacity observations of intermittent sources shall use procedures similar to Method 9, but the requirement for observations to be made at 15-second intervals over a 6-minute period shall not apply. The opacity of any single reading shall not exceed 20% for intermittent sources.

4. All installations and facilities authorized by this approval order shall be adequately and properly maintained.

5. The Executive Secretary shall be notified upon start-up of the installation, as an initial compliance inspection is required.

6. Eighteen months from the date of this approval order the Executive Secretary shall be notified of the status of construction of this project.

7. The owner/operator shall not exceed the following usages of paints as shown below:

   Booth 1913

   Nitro cellulose lacquer Mill 19537C - 780 gallons per year
   Poly mide prime Mill P 23377 - 780 gallons per year
   Polyurethane Mill C-83286 - 780 gallons per year

   Booth 1915

   Stoddard solvent - 780 gallons per year

These values shall not be exceeded without prior approval in accordance with Section 3.1, UACR. Records of usage shall be kept for all periods when the plants are in operation. Records of usage shall be made

available to the Executive Secretary upon request and shall include a period of two years ending with the date of the request. Usage shall be determined by vendor sales receipts.

Any future modifications to the equipment approved by this order must also be approved in accordance with Section 3.1.1, UACR.

DER/sh
1069q

4.2.4-962

DEPARTMENT OF THE AIR FORCE
HEADQUARTERS OGDEN AIR LOGISTICS CENTER (AFLC)
HILL AIR FORCE BASE, UTAH 84056

Mr Carl Broadhead
Bureau of Air Quality
288 North 1460 West
P.O. Box 16690
Salt Lake City, Ut 84116-0690

AUG 2 6 1987

Re: Notice of Intent (NOI) dated 28 May, 1987.

Dear Mr Broadhead

Below is our reponse to your letter of 30 June 1987. Based on your telephone conversation of 12 Aug 87, with our Jay Gupta, this letter also provides additional process information on proposed solvent cleaning booth in building 1915.

1. We agree section 4.9.4A, UACR, applies to the solvent spray booth and section 4.9.6G applies to the paint booth.

2. Pursuant to section 1.1.24, UACR, "Best Available Control Technology" (BACT) is determined on a case by case basis by the Air Conservation Committee. We cannot interpret your regulation in place of the Committee. However, based on information available to us at this time, we believe the control measures listed in UACR 4.9.4A and 4.9.6G meet the definition of BACT in our case.

The requested additional process information on proposed solvent cleaning booth in building 1915 is listed below:

1. The quantity 15 gallons/week (evaporation loss) used in computing solvent emissions is based on actual make-up rate of Stoddard Solvent to a similar unit in operation.

2. The term "Pressure Atomization" here means, solvent under pressure forced through a restrictive opening, a nozzle in this case, to achieve a spray pattern that would enhance cleaning miscellaneous missile components. The intent is not to create atomized fine droplets or a solvent mist that would accelerate solvent loss to the atmosphere.

3. Holding capacity of collecting tank, that holds used solvent from the booth, is approximately 25 gallons. Solvent is recycled to the booth from this tank via circulating pump.

RECEIVED
AIR QUALITY
AUG 28 1987

d) Parts to be cleaned are placed on a screen inside the booth and are sprayed with the cleaning solvent. After dripping ceases, parts are removed and solvent is recirculated.

We hope this answers your questions on this N.O.I. If this office can provide additional information, please feel free to contact Jay Gupta at 777-2065.

Sincerely

THAYNE H. JUDD, Col, USAF
Chief, Environmental Mgt Office

4.2.4-964

NOTICE OF INTENT TO CONSTRUCT

NEW SOLVENT BOOTH IN BLDG 1915

HILL AIR FORCE BASE, UTAH

1. PROJECT DESCRIPTION:

The proposed action provides for installation of a new solvent booth in Building 1915 for spraying miscellaneous missile components. The spray booth is a Bleeker-VF-8 4' H x 8' W x 5' D working area, complete with exhaust chamber filters. Attached is a copy of the manufacturer's specifications for this booth. At a face velocity of 190 feet/minute, the air flow rate at 1/4" sp. is estimated to be 6,370 cfm.

2. POLLUTANT EMISSIONS:

The primary source of air pollutants from the spray booth are solvent particulates and hydrocarbon vapors. Using EPA Publication AP-42 method for calculating solvent losses, the emissions from these sources are calculated as follows:

a. TYPE OF SOLVENT: Stoddard Solvent, PD 680.(2).

DENSITY: 6.5 lb/gal

METHOD OF APPLICATION: Pressure atomization.

PERCENT VOLATILE: 99%

AMOUNT: 15 gal/week

b. $$\frac{(6.5\ \text{lb/gal})\ (15\ \text{Gal/Week})\ (52\ \text{weeks/yr})\ (.99\ \text{vol})}{2{,}000\ \text{lbs/ton}}$$

Total Voc Emission = 2.5 ton/yr.

4.2.4-965

The primary source of air pollutants from paint booth are paint particulates and hydrocarbon vapors. Using EPA Publication AP-42 method for calculating solvent losses, the emissions from these sources are calculated as follows:

a. TYPE: Nitro cellulose lacquer. Mill 19537C

DENSITY: 7.8 lb/gal

METHOD: Air Atomization

PERCENT VOLATILES: 70%

AMOUNT: 3 gal/day

b. TYPE: Poly Mide Prime Mil P 23377

DENSITY: 9.0 lb/gal

METHOD OF APPLICATION: Air Atomization

PERCENT VOLATILES: 51%

AMOUNT: 3 gal/day

c. TYPE: Polyurethane, Mil C-83286

DENSITY: 9.2

METHOD OF ATOMIZATION: Air atomization

PERCENT VOLATILES: 56%

AMOUNT: 3 gal/day

b. BUILDING 1913:

(1) $\frac{(7.8 \text{ lb/gal})\ (15 \text{ gal paint/week})\ (52 \text{ weeks/yr})\ .7 \text{ vol}}{2{,}000 \text{ lbs/ton}}$

= 2.13 tons vol/year.

(2) $\frac{(9.0 \text{ lb/gal})\ (15 \text{ gal/week})\ (52 \text{ weeks/yr})\ .51/\text{vol}}{2{,}000 \text{ lb/ton}}$

= 1.79 tons vol/yr.

(3) $\frac{(9.2 \text{ lb/gal})\ (15 \text{ gal/week})\ (52 \text{ weeks/yr})\ .56 \text{ vol}}{2{,}000 \text{ lb/ton}}$

= 2.00 ton vol/yr.

Total vol emission - 5.92 tons/yr.

3. AIR CLEANING DEVICES.

LOCATED IN BLDG 1 13

DEVILBISS

PAINT ARRESTOR TYPE SPRAY BOOTHS

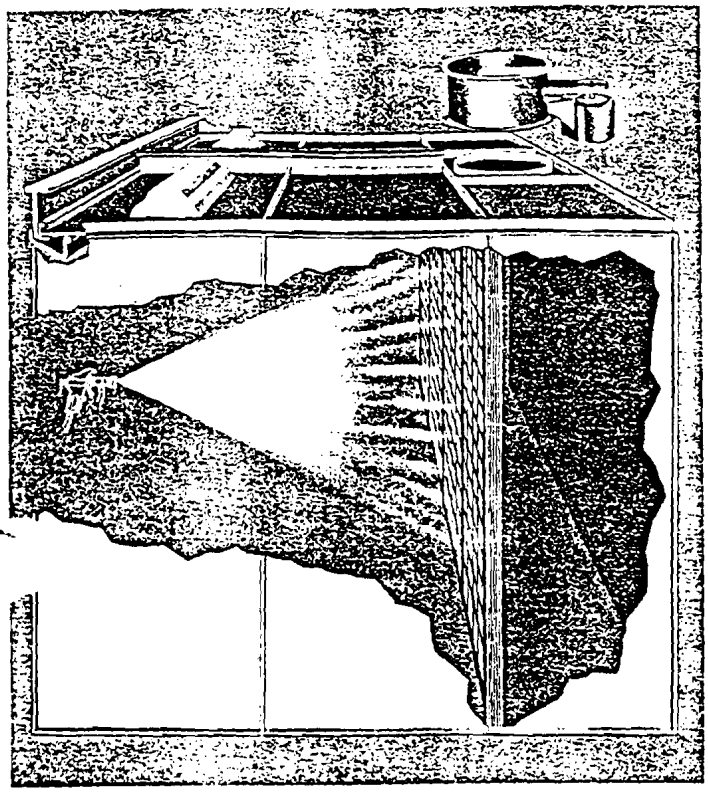

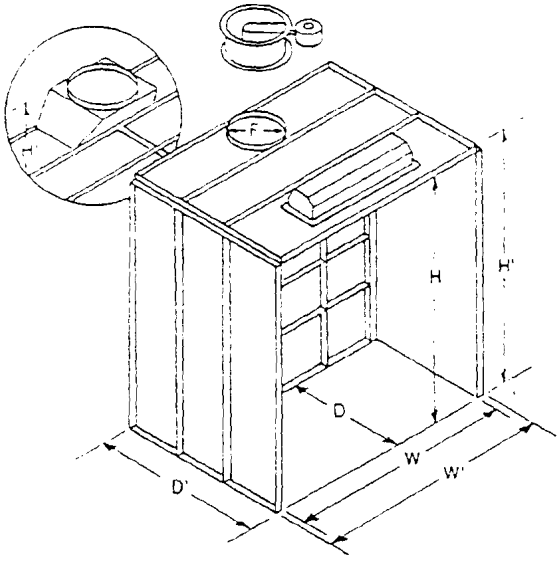

uses

for removal of air-borne paint particles from spray booth exhaust air by means of disposable filters. Requires regular schedule of filter replacement. Ideally suited for limited or intermittent spray operations, such as refinish shops, schools and production lines where paint consumption is moderate.

standard equipment

- **lights**—3 tube, vapor-proof type, rapid-start fluorescent fixtures provide broad source illumination for maximum reduction of shadows in work area.
- **fan rings**—provide reinforced flange type mounting to exhaust stack.
- **DF-483 draft gauge**—for compliance with OSHA.
- **exhaust fan**—Correct size and capacity to produce required air velocity for booths with or without conveyor openings. Open type motor is standard; explosion-proof or totally enclosed available. Fans conform to O.S.H.A. required noise levels of 90 db(A) or less.
- **paint arrestor pads**—Full set of pads sufficient for initial operating period; plus generous supply for replacement.
- **hardware**—All nuts, bolts, fittings, seals, floor clip and tie angles furnished.

important: Specify electric current from which fan motor is to operate. Order required components for exhaust stack. (See pages 46-47).

exhaust chambers

Ideal for special enclosures constructed from standard panels, beams, etc. (see pages 42 and 43)—or for installation in a "spray finishing room." Consist of the complete exhaust chamber section (without the painting area enclosure), paint arrestor frame and retainers and arrestor pads. See pages 50 and 51 for accessories.

Note: Arrestor booths may be erected for top or back exhaust outlet.

PAINT ARRESTOR TYPE
SPRAY BOOTHS

Models and Specifications										100 fpm air velocity without conveyor openings						125 fpm air velocity without conveyor openings 100 fpm air velocity with conveyor openings up to 20% of booth frontal area						
DIMENSIONS Working Chamber (in feet)			Booth Overall (in feet and inches)			No. of Lights*	No. of 20 x 25 Filters		Exhaust Chamber Only—No Fan	Booths with Lights, Fan and Motor	Booths with Fan and Motor with Light Openings Without Lights	Booths with Fan and Motor Without Light Openings and Lights	Fan less Motor	Dia. (in.)	H P	Exhaust Chamber Only—No Fan	Booths with Lights, Fan and Motor	Booths with Fan and Motor with Light Openings Without Lights	Booths with Fan and Motor Without Light Openings and Lights	Fan less Motor	Dia (in.)	H P
W	H	D	W'	H'	D'		Req	Fur														
4	7	6	4-4	7-2	9-2	—	12	36	XCF-600	—	—	XDF-6132	JH-4842	24	½	XCF 600	—	—	XDF-6332	JH-4844	24	¾
6	7	6	6-4	7-2	9-2	1	18	36	XCF-601	XDF-6000	XDF-6066	XDF-6133	JH-4846	24	1	XCF-601	XDF-6200	XDF-6266	XDF-6333	JH-4850	24	1½
6	7	9	6-4	7-2	12-2	1	18	36	XCF-601	XDF-6001	XDF-6067	—	JH-4846	24	1	XCF-601	XDF-6201	XDF-6267	—	JH-4850	24	1½
6	8	6	6-4	8-2	9-2	1	18	36	XCF-602	XDF-6002	XDF-6068	XDF-6134	JH-4850	24	1½	XCF-602	XDF-6202	XDF-6268	XDF-6334	JH-4429	24	1½
6	8	9	6-4	8-2	12-2	1	18	36	XCF-602	XDF-6003	XDF-6069	—	JH-4850	24	1½	XCF-602	XDF-6203	XDF-6269	—	JH-4428	24	1½
8	7	6	8-4	7-2	9-2	1	24	36	XCF-603	XDF-6004	XDF-6070	XDF-6135	JH-4427	24	1½	XCF-603	XDF-6204	XDF-6270	XDF-6335	JH-4428	24	2
8	7	9	8-4	7-2	12-2	1	24	36	XCF-603	XDF-6005	XDF-6071	—	JH-4427	24	1½	XCF-603	XDF-6205	XDF-6271	—	JH-4429	24	2
8	8	6	8-4	8-2	9-2	1	24	36	XCF-605	XDF-6006	XDF-6072	XDF-6136	JH-4428	24	1½	XCF-605	XDF-6206	XDF-6272	XDF-6336	JH-4430	24	3
8	8	9	8-4	8-2	12-2	1	24	36	XCF-605	XDF-6007	XDF-6073	—	JH-4428	24	1½	XCF-605	XDF-6207	XDF-6273	—	JH-4430	24	3
10	7	6	10-4	7-2	9-2	2	36	36	XCF-607	XDF-6008	XDF-6074	XDF-6137	JH-4429	24	2	XCF-607	XDF-6208	XDF-6274	XDF-6337	JH-4425	24	3
10	7	9	10-4	7-2	12-2	2	36	36	XCF-607	XDF-6009	XDF-6075	—	JH-4429	24	2	XCF-607	XDF-6209	XDF-6275	—	JH-4425	24	3
10	8	6	10-4	8-2	9-2	2	36	36	XCF-609	XDF-6010	XDF-6076	XDF-6138	JH-4430	24	3	XCF-610	XDF-6210	XDF-6276	XDF-6338	JJ-4404	34	2
10	8	9	10-4	8-2	12-2	2	36	36	XCF-609	XDF-6011	XDF-6077	—	JH-4430	24	3	XCF-610	XDF-6211	XDF-6277	—	JJ-4404	34	2
10	8	12	10-4	8-2	15-2	4	36	36	XCF-609	XDF-6012	XDF-6078	—	JH-4430	24	3	XCF-610	XDF-6212	XDF-6278	—	JJ-4404	34	2
10	10	6	10-4	10-2	9-2	2	48	72	XCF-611	XDF-6013	XDF-6079	—	JJ-4841	34	2	XCF-611	XDF-6213	XDF-6279	—	JJ-4400	34	3
10	10	9	10-4	10-2	12-2	2	48	72	XCF-611	XDF-6014	XDF-6080	—	JJ-4841	34	2	XCF-611	XDF-6214	XDF-6280	—	JJ-4400	34	3
10	10	12	10-4	10-2	15-2	4	48	72	XCF-611	XDF-6015	XDF-6081	—	JJ-4841	34	2	XCF-611	XDF-6215	XDF-6281	—	JJ-4400	34	3
12	7	6	12-4	7-2	9-2	2	42	72	XCF-613	XDF-6016	XDF-6082	XDF-6139	JH-4431	24	3	XCF-614	XDF-6216	XDF-6282	XDF-6339	JJ-4404	34	2
12	7	9	12-4	7-2	12-2	2	42	72	XCF-613	XDF-6017	XDF-6083	—	JH-4431	24	3	XCF-614	XDF-6217	XDF-6283	—	JJ-4404	34	2
12	8	6	12-4	8-2	9-2	2	42	72	XCF-615	XDF-6018	XDF-6084	XDF-6140	JJ-4839	34	1½	XCF-615	XDF-6218	XDF-6284	XDF-6340	JJ-4400	34	3
12	8	9	12-4	8-2	12-2	2	42	72	XCF-615	XDF-6019	XDF-6085	—	JJ-4839	34	1½	XCF-615	XDF-6219	XDF-6285	—	JJ-4400	34	3
12	8	12	12-4	8-2	15-2	4	42	72	XCF-615	XDF-6020	XDF-6086	—	JJ-4839	34	1½	XCF-615	XDF-6220	XDF-6286	—	JJ-4400	34	3
12	8	15	12-4	8-2	18-2	4	42	72	XCF-615	XDF-6021	XDF-6087	—	JJ-4839	34	1½	XCF-615	XDF-6221	XDF-6287	—	JJ-4400	34	3
12	10	6	12-4	10-2	9-2	2	56	72	XCF-617	XDF-6022	XDF-6088	—	JJ-4400	34	3	XCF-617	XDF-6222	XDF-6288	—	JJ-4402	34	5
12	10	9	12-4	10-2	12-2	2	56	72	XCF-617	XDF-6023	XDF-6089	—	JJ-4400	34	3	XCF-617	XDF-6223	XDF-6289	—	JJ-4402	34	5
12	10	12	12-4	10-2	15-2	4	56	72	XCF-617	XDF-6024	XDF-6090	—	JJ-4400	34	3	XCF-617	XDF-6224	XDF-6290	—	JJ-4402	34	5
12	10	15	12-4	10-2	18-2	4	56	72	XCF-617	XDF-6025	XDF-6091	—	JJ-4400	34	3	XCF-617	XDF-6225	XDF-6291	—	JJ-4402	34	5
14	7	6	14-4	7-8	9-2	2	48	72	XCF-619	XDF-6026	XDF-6092	XDF-6141	JJ-4839	34	1½	XCF-619	XDF-6226	XDF-6292	XDF-6341	JJ-4400	34	3
14	7	9	14-4	7-8	12-2	2	48	72	XCF-619	XDF-6027	XDF-6093	—	JJ-4839	34	1½	XCF-619	XDF-6227	XDF-6293	—	JJ-4400	34	3
14	8	6	14-4	8-8	9-2	2	48	72	XCF-621	XDF-6028	XDF-6094	XDF-6142	JJ-4405	34	3	XCF-621	XDF-6228	XDF-6294	XDF-6342	JJ-4401	34	5
14	8	9	14-4	8-8	12-2	2	48	72	XCF-621	XDF-6029	XDF-6095	—	JJ-4405	34	3	XCF-621	XDF-6229	XDF-6295	—	JJ-4401	34	5
14	8	12	14-4	8-8	15-2	4	48	72	XCF-621	XDF-6030	XDF-6096	—	JJ-4405	34	3	XCF-621	XDF-6230	XDF-6296	—	JJ-4401	34	5
14	8	15	14-4	8-8	18-2	4	48	72	XCF-621	XDF-6031	XDF-6097	—	JJ-4405	34	3	XCF-621	XDF-6231	XDF-6297	—	JJ-4401	34	5
14	10	6	14-4	10-8	9-2	2	64	72	XCF-623	XDF-6032	XDF-6098	—	JJ-4401	34	5	XCF-624	XDF-6232	XDF-6298	—	JK-4401	42	5
14	10	9	14-4	10-8	12-2	2	64	72	XCF-623	XDF-6033	XDF-6099	—	JJ-4401	34	5	XCF-624	XDF-6233	XDF-6299	—	JK-4401	42	5
14	10	12	14-4	10-8	15-2	4	64	72	XCF-623	XDF-6034	XDF-6100	—	JJ-4401	34	5	XCF-624	XDF-6234	XDF-6300	—	JK-4401	42	5
14	10	15	14-4	10-8	18-2	4	64	72	XCF-623	XDF-6035	XDF-6101	—	JJ-4401	34	5	XCF-624	XDF-6235	XDF-6301	—	JK-4401	42	5
16	7	6	16-4	7-8	9-2	2	54	72	XCF-626	XDF-6036	XDF-6102	XDF-6143	JJ-4405	34	3	XCF-626	XDF-6236	XDF-6302	XDF-6343	JJ-4401	34	5
16	7	9	16-4	7-8	12-2	2	54	72	XCF-606	XDF-6037	XDF-6103	—	JJ-4405	34	3	XCF-626	XDF-6237	XDF-6302	—	JJ-4401	34	5
16	8	6	16-4	8-8	9-2	2	54	72	XCF-628	XDF-6038	XDF-6104	XDF-6144	JJ-4400	34	3	XCF-628	XDF-6238	XDF-6304	XDF-6344	JJ-4402	34	5
16	8	9	16-4	8-8	12-2	2	54	72	XCF-628	XDF-6039	XDF-6105	—	JJ-4400	34	3	XCF-628	XDF-6239	XDF-6305	—	JJ-4402	34	5
16	8	12	16-4	8-8	15-2	4	54	72	XCF-628	XDF-6040	XDF-6106	—	JJ-4400	34	3	XCF-628	XDF-6240	XDF-6306	—	JJ-4402	34	5
16	8	15	16-4	8-8	18-2	4	54	72	XCF-628	XDF-6041	XDF-6107	—	JJ-4400	34	3	XCF-628	XDF-6241	XDF-6307	—	JJ-4402	34	5
16	10	6	16-4	10-8	9-2	2	72	72	XCF-631	XDF-6042	XDF-6108	—	JJ-4402	34	5	XCF-632	XDF-6242	XDF-6308	—	JK-4402	42	5
16	10	9	16-4	10-8	12-2	2	72	72	XCF-631	XDF-6043	XDF-6109	—	JJ-4402	34	5	XCF-632	XDF-6243	XDF-6309	—	JK-4402	42	5
16	10	12	16-4	10-8	15-2	4	72	72	XCF-631	XDF-6044	XDF-6110	—	JJ-4402	34	5	XCF-632	XDF-6244	XDF-6310	—	JK-4402	42	5
16	10	15	16-4	10-8	18-2	4	72	72	XCF-631	XDF-6045	XDF-6111	—	JJ-4402	34	5	XCF-632	XDF-6245	XDF-6311	—	JK-4402	42	5
18	7	6	18-4	7-8	9-2	3	60	72	XCF-634	XDF-6046	XDF-6112	XDF-6145	JJ-4400	34	3	XCF-634	XDF-6246	XDF-6312	XDF-6345	JJ-4402	34	5
18	7	9	18-4	7-8	12-2	3	60	72	XCF-634	XDF-6047	XDF-6113	—	JJ-4400	34	3	XCF-634	XDF-6247	XDF-6313	—	JJ-4402	34	5
18	8	6	18-4	8-8	9-2	3	60	72	XCF-637	XDF-6048	XDF-6114	XDF-6146	JJ-4401	34	5	XCF-638	XDF-6248	XDF-6314	XDF-6346	JK-4405	42	5
18	8	9	18-4	8-8	12-2	3	60	72	XCF-637	XDF-6049	XDF-6115	—	JJ-4401	34	5	XCF-638	XDF-6249	XDF-6315	—	JK-4405	42	5
18	8	12	18-4	8-8	15-2	6	60	72	XCF-637	XDF-6050	XDF-6116	—	JJ-4401	34	5	XCF-638	XDF-6250	XDF-6316	—	JK-4405	42	5
18	8	15	18-4	8-8	18-2	6	60	72	XCF-637	XDF-6051	XDF-6117	—	JJ-4401	34	5	XCF-638	XDF-6251	XDF-6317	—	JK-4405	42	5
18	10	6	18-4	12-8	9-2	3	80	108	XCF-640	XDF-6052	XDF-6118	—	JK-4405	42	5	XCF-641	XDF-6252	XDF-6318	—	JL-4400	48	5
18	10	9	18-4	12-8	12-2	3	80	108	XCF-640	XDF-6053	XDF-6119	—	JK-4405	42	5	XCF-641	XDF-6253	XDF-6320	—	JL-4400	48	5
18	10	12	18-4	12-8	15-2	6	80	108	XCF-640	XDF-6054	XDF-6120	—	JK-4405	42	5	XCF-641	XDF-6254	XDF-6320	—	JL-4400	48	5
18	10	15	18-4	12-8	18-2	6	80	108	XCF-640	XDF-6055	XDF-6121	—	JK-4405	42	5	XCF-641	XDF-6255	XDF-6321	—	JL-4400	48	5
20	7	6	20-4	7-8	9-2	4	72	72	XCF-624	XDF-6056	XDF-6122	XDF-6147	JJ-4401	34	5	XCF-643	XDF-6256	XDF-6322	XDF-6347	JK-4401	42	5
20	7	9	20-4	7-8	12-2	4	72	72	XCF-642	XDF-6057	XDF-6123	—	JJ-4401	34	5	XCF-643	XDF-6257	XDF-6323	—	JK-4401	42	5
20	8	6	20-4	8-8	9-2	4	72	72	XCF-645	XDF-6058	XDF-6124	XDF-6148	JJ-4402	34	5	XCF-646	XDF-6258	XDF-6324	XDF-6348	JK-4402	42	5
20	8	9	20-4	8-8	12-2	4	72	72	XCF-645	XDF-6059	XDF-6125	—	JJ-4402	34	5	XCF-646	XDF-6259	XDF-6325	—	JK-4402	42	5
20	8	12	20-4	8-8	15-2	8	72	72	XCF-645	XDF-6060	XDF-6126	—	JJ-4402	34	5	XCF-646	XDF-6260	XDF-6326	—	JK-4402	42	5
20	8	15	20-4	8-8	18-2	8	72	72	XCF-645	XDF-6061	XDF-6127	—	JJ-4402	34	5	XCF-646	XDF-6261	XDF-6327	—	JK-4402	42	5
20	10	6	20-4	12-8	9-2	4	96	108	XCF-648	XDF-6062	XDF-6128	—	JK-4402	42	5	XCF-649	XDF-6262	XDF-6328	—	JL-4400	48	5
20	10	9	20-4	12-8	12-2	4	96	108	XCF-648	XDF-6063	XDF-6129	—	JK-4402	42	5	XCF-649	XDF-6263	XDF-6329	—	JL-4400	48	5
20	10	12	20-4	12-8	15-2	8	96	108	XCF-648	XDF-6064	XDF-6130	—	JK-4402	42	5	XCF-649	XDF-6264	XDF-6330	—	JL-4400	48	5
20	10	15	20-4	12-8	18-2	8	96	108	XCF-648	XDF-6065	XDF-6131	—	JK-4402	42	5	XCF-649	XDF-6265	XDF-6331	—	JL-4400	48	5

*LF-524 Lights will be supplied on "Booth with Light."
One (1) Light Bracket Assembly (LF-438) furnished with each light.

Fan models shown in gray areas indicate fan is set up for an open motor and is being used with the next higher H.P. motor.