REVISED DATA GAPS WORK PLAN

(AN ADDENDUM TO THE APPROVED 2006 SAMPLING INVESTIGATION WORK PLAN AND SAMPLING AND ANALYSIS PLAN)

UNIVERSITY OF PORTLAND
RIVER CAMPUS PROPERTY
PORTLAND, OREGON

Submitted to:
University of Portland, Portland, Oregon

Submitted by:
AMEC Geomatrix, Inc., Seattle, Washington

September 2009

Project 13867

TABLE OF CONTENTS

Page

1.0 INTRODUCTION 1
1.1 BACKGROUND 1
2.0 OBJECTIVES AND SCOPE OF WORK 2
3.0 WORK TO BE CONDUCTED 2
3.1 AREA 1A 3
3.2 AREA 1B 3
3.3 AREA 1C 4
3.4 AREA 2A 4
3.5 AREA 2B 5
3.6 AREA 3A AND THE FORMER BUILDING AREA SOUTH OF 3A 7
3.7 AREA 3B 7
3.8 AREA 4 7
3.9 AREA 5A 8
3.10 AREA 5B 9
3.11 AREA 6A 9
3.12 AREA 6B 10
3.13 AREA 6C 10
3.14 AREA 6D 11
3.15 AREA RS-1 12
3.16 AREA RS-2 13
3.17 AREA RS-3 14
4.0 SCHEDULE AND REPORTING 15
5.0 REFERENCES 15

TABLES

Table 1 Sample Collection and Analyses
Table 2 Project Roles and Responsibilities
Table 3 Area 2A Historical Data
Table 4 Area 2B Historical Data
Table 5 Areas 3A and 3B Historical Data
Table 6 Areas 5A and RS-2 Historical Data
Table 7 Area 6C Historical Data
Table 8 Area RS-3 Historical Data

TABLE OF CONTENTS
(Continued)

FIGURES

Figure 1 Site Plan and Sampling Areas
Figure 2 Proposed Sampling Locations and Monitoring Well Network
Figure 3 Areas 2A and 2B
Figure 4 Areas 3A and 3B
Figure 5 Areas 5A, 5B, and RS-2
Figure 6 Areas RS-1 and 6C
Figure 7 Areas 6A, 6B, and 6D
Figure 8 Area RS-3

APPENDIXES

Appendix A Monitoring Well Boring Logs

REVISED DATA GAPS WORK PLAN (AN ADDENDUM TO THE APPROVED 2006 SAMPLING INVESTIGATION WORK PLAN AND SAMPLING AND ANALYSIS PLAN)

University of Portland River Campus Property
Portland, Oregon

1.0 INTRODUCTION

AMEC Geomatrix, Inc. (AMEC Geomatrix), prepared this Work Plan for proposed focused subsurface investigation activities at the University of Portland (UP) River Campus Property (site), located at 5828 North Van Houten Place in Portland, Oregon. UP, the property owner, plans to clean up and redevelop the site to expand the UP campus following completion of the ongoing Engineering Evaluation/Cost Analysis (EE/CA) process. The scope of work described in this Work Plan will complete the site characterization work needed to facilitate cleanup decision making under the EE/CA process.

1.1 BACKGROUND

The site has primarily been vacant over the past 10 years, other than activities associated with site-wide environmental studies. Since the early 1900s, a very lengthy history of diverse industrial operations have occurred at the site. UP purchased the site in 2008. In 2006, UP had entered into a Bona Fide Prospective Purchaser Agreement (BFPPA) with the U.S. Environmental Protection Agency (EPA). The BFPPA requires UP to perform a removal action in accordance with the BFPPA, including the Statement of Work.

In preparation for purchase of the property, AMEC Earth & Environmental's Portland office (AMEC) (on behalf of UP) conducted a multi-increment sampling (MIS) investigation at the property (AMEC, 2006c). Evaluation of data in that report employed screening levels based on the Joint Source Control Strategy (JSCS) (ODEQ, 2007). Since that report was issued, several of the JSCS screening levels have changed. UP, AMEC Geomatrix, and EPA met in 2008 to discuss the results of the 2006 MIS investigation and evaluate remaining data gaps at the site.

During the meeting, the team reviewed the changes to the JSCS screening levels, and how they relate to EPA Region 6 Preliminary Remediation Goals (PRGs). Each of the MIS areas was reviewed in relation to UP's development plans for the property and the revised screening levels to determine what additional characterization work may be warranted to support decision making in the EE/CA. A summary of this meeting, including identified data gaps, was

submitted to EPA in the form of a Meeting Notes Memorandum (Geomatrix, 2008). This Work Plan outlines the scope and methods that will be used to complete the additional characterization work needed to address those data gaps.

2.0 OBJECTIVES AND SCOPE OF WORK

The objective of the work being conducted under this Work Plan is to address the identified data gaps that must be filled in order to complete the site EE/CA. Further sampling and analysis of soil and groundwater are necessary to more precisely document the potential contamination levels on site and as well to evaluate impacts to groundwater through leaching. The objectives of surface MIS sampling (0-1 foot) are to obtain contaminant data to evaluate the likely risk to human health and ecological receptors from direct contact with the soil, and to evaluate the potential for site soils to contaminate adjacent river sediments above acceptable levels for humans and ecological receptors. The objective of the deeper MIS sampling (1-5 and 5-10 feet) is to estimate the mass of contamination present in that volume of soil, and to determine whether the mean volume concentration will likely present a problem for significant leaching to groundwater, and from that groundwater subsequently to the Willamette River. The objective of groundwater sampling from temporary monitoring points is to determine whether the groundwater is contaminated beyond an acceptable level which may impact the Willamette River as it discharges and if so whether additional discrete removal actions are required in the site shallow soils. AMEC Geomatrix will perform the following tasks to meet these objectives.

- Collect groundwater samples at 11 locations to evaluate groundwater conditions downgradient of areas with known soil contamination.
- Collect additional discrete soil samples at three locations to determine the extent of previously identified hot spots.
- Conduct additional multi-increment sampling of shallow soils in four subareas for analysis of polychlorinated biphenyls (PCBs) and in seven subareas for analysis of dioxins.
- Conduct additional multi-increment sampling of soils at three depths in one area that was previously inaccessible.
- Analyze several previously collected MIS samples from lower depth zones for dioxins.

3.0 WORK TO BE CONDUCTED

This section summarizes the field tasks necessary to complete site characterization for the EE/CA. The basis of these tasks was described in the Meeting Notes Memorandum (Geomatrix, 2008). The methodology, including quality control measures to be used to

complete these tasks, is described in the EPA-approved Sampling and Analysis Plan (SAP) and Quality Assurance Project Plan (QAPP) produced for the 2006 MIS sampling investigation (AMEC, 2006b). This includes collection of a triplicate sample in one of the MIS areas sampled under this work plan for quality assurance purposes. The triplicate will be collected from a separate random start location within the chosen MIS unit.

Groundwater sampling conducted under this plan will be at temporary sampling locations only (via direct-push methods). The methodology for this sampling is described in Section 4.5 of the EPA-approved Work Plan (Section 5.2.2 of the associated SAP and Section 3.2 of the QAPP) produced in 2006 (AMEC, 2006a, 2006b). Boring logs for each of the groundwater sampling locations will be completed and reported in the EE/CA. Boring logs for existing wells at the site are provided in Appendix A for reference.

For the purposes of evaluating potential remedies, the site has been divided into separate sampling areas, shown on Figure 1. The proposed sampling and analysis tasks are summarized in Table 1. Figure 2 presents an overview of proposed sampling locations and the existing groundwater monitoring network. The following sections present a brief overview of each of the sample areas shown on Figure 1 and outline the additional data collection, if any, needed for each area. The proposed sampling locations for specific Sampling Areas are shown in Figures 3 through 8. An updated summary of project roles and responsibilities is provided in Table 2.

3.1 AREA 1A

Most of this area is planned for development, including buildings and parking. MIS sampling results were all below screening levels. The current level of characterization is sufficient. No additional sampling or analysis is necessary prior to the EE/CA.

3.2 AREA 1B

Most of this area is planned for development, including buildings and parking. Lead was detected during MIS sampling in the depth range of 1-5 feet at a concentration of 19 milligrams per kilogram (mg/kg), which is slightly above the JSCS screening level of 17 mg/kg. Polycyclic aromatic hydrocarbons (PAHs) have been detected at concentrations greater than the screening levels in soil; however, since this area will be mostly covered and PAHs are unlikely to migrate to the river, further assessment was not considered necessary in this area. Concentrations of individual PAHs ranged from 450 to 11,000 micrograms per kilogram (µg/kg), including benzo(a)pyrene at 2,100 µg/kg (screening level of 1,450 µg/kg) and phenanthrene at 11,000 µg/kg (screening level of 1,170 µg/kg). Assessment of potential groundwater impacts downgradient of Area 1B (near Area 6) will be conducted, and will be

addressed as part of Area 6. For the purposes of the EE/CA, Area 1B soils will be assumed to be contaminated with PAHs to depths of at least 10 feet.

3.3 AREA 1C

Analytical results from MIS sampling for all analytes were below individual JSCS screening levels; however, Aroclor 1260 was detected in the MIS surface soil sample at a concentration of 81 µg/kg, below the Aroclor 1260 JSCS screening level (200 µg/kg), but above the total PCBs screening level (0.39 µg/kg). PCBs were not detected in either of the two deeper MIS samples. The current level of characterization is sufficient, no additional sampling or analysis is necessary prior to the EE/CA.

3.4 AREA 2A

The former power house building was located in Area 2A (Figure 3). Several portions of the building contained a basement, and conditions of the soils under the building and basement are unknown. To facilitate further investigation of soils in this area, EPA approved UP's demolition of this building and subsequent removed of as much of the concrete basement walls and floor as could be done without jeopardizing the stability of the hillside directly east of this building. UP plans to conduct an MIS investigation of soils beneath the building (AMEC Geomatrix, 2009). The MIS investigation in the area beneath the former power house building (Area 2A1) will include 30 individual locations, sampled at the three depth intervals used during the 2006 MIS investigation (0–1 foot, 1–5 feet, and 5–10 feet), plus an additional fourth interval (approximately 10-14 feet) to evaluate conditions beneath the depth of the basement floor. The composited MIS samples will be analyzed for lead, PAHs, and PCBs. Figure 3 shows the new area, termed Area 2A1, and an approximate representation of the locations for the individual sample points. The actual locations of sample points for MIS will be established in the field using a systematic random sample design (Hawaii Department of Health, 2008).

The rest of Area 2A was well characterized during the initial MIS investigation. Two PAH compounds have been detected at concentrations greater than screening levels in soil samples collected at the surface in Area 2A, but not in samples collected at depth. These PAH compounds were phenanthrene at a concentration of 1,900 µg/kg (screening level of 1,170 µg/kg) and indeno(1,2,3-cd)pyrene at a concentration of 230 µg/kg (screening level of 100 µg/kg). The PAH compounds chrysene (1,600 µg/kg), fluorene (2,900 µg/kg), and acenaphthene (630 µg/kg) were also detected above screening levels (1,290 µg/kg, 300 µg/kg, and 300 µg/kg, respectively) in a waste sample collected as part of MIS sampling in the depth range of 9–10 feet (WS-2A-16). Lead was also detected above the screening level (17 mg/kg) in MIS samples in the upper two depth intervals at concentrations ranging from 29 to 84 mg/kg. Aroclor 1260 was detected in the MIS surface soil sample at a concentration of 58 µg/kg, which is below the Aroclor 1260 JSCS screening level (200 µg/kg), but above the

total PCBs screening level (0.39 µg/kg). PCBs were not detected in either of the two deeper MIS samples. Historical data are shown in Table 3.

Groundwater sampling of monitoring well MW-A2-3 has not indicated groundwater contamination in Area 2A, but groundwater immediately downgradient of this area has not been assessed. For the purposes of the EE/CA, soil has been sufficiently characterized. Direct-push groundwater sampling will be conducted to characterize PAH concentrations in groundwater directly downgradient of Area 2A. Two borings will be completed in Area 2B (RC-1 and RC-2) and one boring will be completed in Area 5B (RC-3) (Figure 2).

3.5 AREA 2B

As noted in Section 3.4, direct-push groundwater sampling will be conducted in Area 2B to characterize PAH concentrations in groundwater directly downgradient of Area 2A. Two direct-push borings (RC-1 and RC-2) will be installed, as shown in Figure 3, and grab groundwater samples will be collected for analysis of PAHs.

Soil in the majority of Area 2B has been well characterized. Analytical results from MIS sampling showed lead (20 to 60 mg/kg) and arsenic (7.8 mg/kg) present above screening levels (17 and 7 mg/kg, respectively) in surface soils. Aroclor 1260 was also detected in the MIS surface soil sample at a concentration of 90 µg/kg, which is below the Aroclor 1260 JSCS screening level (200 µg/kg), but above the total PCBs screening level (0.39 µg/kg). PCBs were not detected in either of the two deeper MIS samples. MIS sampling does not indicate further soil sampling is necessary in this area. However, Area 2B includes two small subareas that were previously proposed for excavation by the Oregon Department of Environmental Quality (DEQ), based on elevated concentrations of diesel, heavy oil, and lead. These areas (shown on Figure 3) were excluded from the earlier MIS sampling. To enable cleanup decisions in the EE/CA for this area, the historical discrete data that led to identifying this area for excavation, as well as subsequent confirmation discrete sampling conducted by AMEC's Portland office, were reviewed to determine if additional sampling may be necessary. These historical data are shown in Table 4.

Previously proposed Excavation Area A2-3 (Figure 3) is located at the historical sample location of TP-1, a test pit conducted by Maul, Foster, and Alongi (MFA) in September 1996. The test pit showed lead concentrations of 4,260 mg/kg at a depth of 0.5 feet and 1,550 mg/kg at a depth of 4 feet. The JSCS screening level for lead is 17 mg/kg. Additionally, a sample from direct-push location GP-174, collected by MFA in August 2000, showed lead at a concentration of 550 mg/kg. Three borings (DP-A2-09, DP-A2-10, and DP-A2-11) were conducted by AMEC in November 2005 to confirm the results. Borings DP-A2-09, DP-A2-10, and DP-A2-11 were located approximately 15 feet away from the TP-1 location and sampled

at depths of 2 and 6 feet. Results for these samples showed lead concentrations ranging from 2.06 mg/kg to 10.6 mg/kg, all below the JSCS screening level. Based on this information, TP-1 appears to be an isolated hotspot; no further sampling is proposed for this area.

Previously proposed Excavation Area A2-1 (Figure 3) is located at the historical sample location GP-37, a direct-push boring conducted in May 1999. GP-37 showed diesel at a concentration of 26,000 mg/kg and elevated PAHs (190 to 7,100 µg/kg for different compounds) at a depth of 1.3 feet. The JSCS screening level for diesel is 500 mg/kg, and the JSCS screening level for individual PAH compounds ranges from 100 to 13,000 µg/kg, as shown in Table 4. Five borings (DP-A2-01 through DP-A2-05) were conducted by AMEC in November 2005 to confirm the results. Boring DP-A2-02 was located at the edge of the proposed excavation area, and borings DP-A2-01 and DP-A2-03 through DP-A2-05 were located slightly farther away from the proposed excavation area. Each location was sampled for total petroleum hydrocarbons (TPH) in the diesel range (TPH-D) at depths of 2 and 4 feet; DP-A2-01 was also sampled at 7 feet. Four samples were also analyzed for PAHs. Results at the locations closest to the proposed excavation area, DP-A2-02, showed a motor oil concentration of 750 mg/kg in the sample collected at a depth of 2 feet, but motor oil was not detected in the sample collected at a depth of 4 feet. Motor oil concentrations in samples collected farther from the edge of the proposed excavation area (DP-A2-01 and DP-A2-03 through DP-A2-05) were all below the detection limit, except for the samples collected at depths of 7 feet and 4 feet from DP-A2-01, which had motor oil concentrations of 680 mg/kg and 97 mg/kg, respectively. The sample from GP-135 (August 2000) was also collected relatively close to the GP-37 location, as shown in Figure 3. GP-135 had a diesel concentration of 1,800 mg/kg at a depth 1 of foot. Finally, a waste sample (WS-2A-16) collected during the MIS investigation, near GP-135, also contained elevated levels of diesel (10,000 mg/kg) and motor oil (17,000 mg/kg). PAH results were not elevated at any of the locations in the vicinity of Area A2-1, except for the waste sample location WS-2A-16, as discussed in Section 3.4. The historical data are shown in Table 4.

Since no borings were conducted to the east of GP-137 during previous investigations, an additional boring (RC-4) will be completed to the east of GP-137, and soil samples will be collected at depths of 2 and 4 feet (Figure 3). Samples from this new location will be analyzed for TPH-D. These data, combined with the historical results shown in Table 4, should provide a sufficient dataset to complete the EE/CA.

A waste sample (WS-2B-30) collected during the MIS investigation outside of the proposed excavation areas showed elevated levels of diesel (490 mg/kg) and motor oil (2,200 mg/kg). Nearby MIS locations to the north, east, and south (2B-17, 2B-18, and 2B-19) did not indicate contamination that led to additional waste samples in this area; however, no borings were

conducted to the west of WS-2B-30. As noted above, an additional boring (RC-2) is being installed to the west of this vicinity to assess groundwater quality (Figure 3). Discrete soil samples will be collected at depths of 2 and 4 feet from this boring and analyzed for TPH-D to enable cleanup decisions in the EE/CA.

3.6 AREA 3A AND THE FORMER BUILDING AREA SOUTH OF 3A

Aroclor 1260 and Aroclor 1254 were detected in the MIS surface soil sample at concentrations of 130 µg/kg and 36 µg/kg, respectively. These concentrations are below the EPA Regional Screening Levels (RSLs) for residential and industrial soil exposures (220 µg/kg and 740 µg/kg, respectively) and the JSCS screening levels for Aroclor 1260 and Aroclor 1254 (200 µg/kg and 300 µg/kg, respectively), but above the total PCBs screening level (0.39 µg/kg). PCBs were not detected in either of the two deeper MIS samples. Analytical results for PCBs in MIS samples from Area 3A are shown in Table 5. The current level of characterization is sufficient. No additional sampling or analysis is necessary prior to the EE/CA.

3.7 AREA 3B

Aroclor 1260 was detected in surface soils in this area (during the MIS Investigation) at a concentration of 490 µg/kg, which is above the RSL for residential soil exposure (220 µg/kg) and the JSCS screening level (200 µg/kg). Aroclor 1248 and Aroclor 1254 were also detected in surface soils, but at concentrations below screening levels. PCBs were not detected in either of the two deeper MIS samples.

Additional MIS sampling will be conducted for this area to enable cleanup decisions in the EE/CA. The 1.1-acre area will be divided into four separate smaller areas (Areas 3B1, 3B2, 3B3, and 3B4) for MIS sampling of surface soils (0 to 1 foot) (Figure 4). MIS samples will be collected from 30 sample points in each area. The 30 individual samples will be composited, and the composite sample will be analyzed for PCBs. Figure 4 shows the location of the 3B subareas and an approximate representation of the locations for the 30 MIS sample points within each subarea. Actual sampling points for MIS will be established in the field using a systematic random sample design (Hawaii Department of Health, 2008).

3.8 AREA 4

Lead was the only analyte detected above the JSCS screening level (17 mg/kg) during MIS sampling in the depth ranges 0-1 foot and 1-5 feet (36 mg/kg in both). Lead concentrations were below the screening level in the deeper MIS sample. The current level of characterization for Area 4 is sufficient. No additional sampling or analysis is necessary prior to the EE/CA.

3.9 AREA 5A

Most of Area 5A is planned for development, including buildings and parking. The majority of Area 5A has been well characterized, and results from MIS sampling indicate that no further sampling is necessary in this area. Lead was the only analyte detected in MIS samples in Area 5A at concentrations above the JSCS screening (17 mg/kg) level. Lead concentrations in these samples ranged from 24 to 52 mg/kg, with the highest concentrations found in the surface soil sample. However, Area 5A includes two subareas that were previously proposed for excavation by DEQ, based on elevated concentrations of PAHs, PCBs, and TPH. These areas were excluded from the MIS sampling. In order to enable cleanup decisions for this area in the EE/CA, the historical discrete data that led to identifying this area for excavation, as well as subsequent confirmation discrete sampling conducted by AMEC, were reviewed to determine if additional sampling may be necessary. Historical data for Area 5A are summarized in Table 6.

DEQ's Excavation Area A5-11 (Figure 5) is located at the historical sample location GP-82, a direct-push sample collected in June 1999. GP-82 showed elevated concentrations of PAHs, including benzo(a)pyrene at 75,000 µg/kg, at a depth of 5 feet. The JSCS screening level for benzo(a)pyrene is 1,450 µg/kg. Three borings (DP-A5-36 through DP-A5-38) were conducted by AMEC in November 2005 to confirm the results. The borings were located approximately 15 feet away from GP-82 and sampled at depths of 4 and 8 feet for analysis of PAHs. DP-A5-37 was also sampled at a depth of 11.5 feet. As shown in Table 6, concentrations of all analytes at DP-A5-36 and DP-A5-38 were below the JSCS screening levels. Concentrations of PAH analytes at DP-A5-37 were above screening levels in the sample collected at a depth of 8 feet and higher than concentrations observed at GP-82; concentrations in the samples collected at depths of 4 and 11.5 feet were all below JSCS screening levels and many were below the detection limit. These results indicate that the lateral extent of contamination for this area does not appear to have been confirmed by the 2005 sampling. Therefore, an additional boring (RC-5) is proposed to enable cleanup decisions in the EE/CA. Discrete soil samples will be collected from RC-5 at depths of 5, 8, and 11.5 feet and analyzed for PAHs.

DEQ's proposed Excavation Area A5-12A/B (Figure 5) is located surrounding the historical sample locations GP-88, GP-89, and GP160, direct-push samples collected in June 1999 and August 2000. This proposed excavation area overlaps with Area RS-2, described in Section 3.16. GP-89 is located in Area RS-2. Samples collected at a depth of 0.5 foot at GP-88 and GP-160 showed PCB concentrations of 360 µg/kg and 1,300 µg/kg, respectively, which are above the JSCS screening level for total PCBs (0.39 µg/kg). TPH-D results were also elevated at GP-160 in the sample collected at a depth of 0.5 foot, with a diesel concentration of 230 mg/kg and motor oil concentration of 660 mg/kg. The motor oil

concentration exceeds the JSCS screening level of 500 mg/kg. Six borings (DP-A5-39 through DP-A5-44) were conducted by AMEC in November 2005 near GP-89 and GP-160 to confirm the results. The borings were sampled at depths of 1 and 3 feet, and the samples were analyzed for PCBs. DP-A5-40 was also sampled at a depth of 8 feet. PCBs were not detected in any of the 2005 samples. The current level of characterization for Area A5-12A/B is sufficient, and no additional sampling or analysis is necessary in this vicinity prior to the EE/CA.

3.10 AREA 5B

Aroclor 1260 and Aroclor 1254 were detected in the MIS surface soil sample in Area 5B at concentrations of 78 µg/kg and 81 µg/kg, respectively, which are below the JSCS screening levels for Aroclor 1260 and Aroclor 1254 (200 µg/kg and 300 µg/kg, respectively), but above the JSCS screening level for total PCBs (0.39 µg/kg). PCBs were not detected in either of the two deeper MIS samples. Dioxin levels and lead (32 mg/kg) slightly above the screening level were also detected in the MIS surface soil sample from Area 5B. The current level of characterization for this area is sufficient. No additional sampling or analysis is necessary prior to the EE/CA, but the dioxin and PCB levels will need to be considered during the EE/CA.

As noted in Section 3.4, direct-push groundwater sampling will be conducted in Area 5B to characterize PAH concentrations in groundwater directly downgradient of Area 2A. One direct-push boring (RC-3) will be installed, as shown in Figure 5, and grab groundwater samples will be collected for analysis of PAHs.

3.11 AREA 6A

Most of Area 6A will be covered by a ball field when redeveloped. The area was well characterized during MIS sampling. Aroclor 1260 and Aroclor 1254 were detected in the MIS surface soil sample from Area 6A at concentrations of 51 µg/kg and 38 µg/kg, respectively, below the JSCS screening levels for Aroclor 1260 and Aroclor 1254 (200 µg/kg and 300, respectively), but above the JSCS screening level for total PCBs (0.39 µg/kg). PCBs were not detected in either of the two deeper MIS samples. The PAH compounds indeno(1,2,3-cd)pyrene and pyrene were also detected in the MIS surface soil sample at concentrations of 290 µg/kg and 1,600 µg/kg, respectively, which are above the JSCS screening levels for these compounds (100 and 1,520 µg/kg respectively). Tributyltin was detected in this MIS surface soil sample at a concentration of 81 µg/kg, which is above the JSCS screening level of 2.3 µg/kg. Concentrations of PAHs and tributyltin were below screening levels in the deeper MIS samples. However, PAHs were also detected above screening levels in several waste samples collected at depths of 3 to 8.5 feet. Diesel and motor oil were also detected above the screening level in the MIS sample from the depth range of 5 to 10 feet and in several waste samples collected in this area. Lead was detected above the screening level

(17 mg/kg) in all three depth intervals during MIS sampling at concentrations ranging from 19 mg/kg to 201 mg/kg. For the purposes of the EE/CA, soils in Area 6A will be assumed to be contaminated with PCBs and tributyltin in surface soils and lead, PAHs, and petroleum hydrocarbons in soils to depths of 8.5 to 10 feet. No further soil sampling is needed for the EE/CA.

Groundwater conditions downgradient of Area 6A have not been well characterized. Direct-push groundwater sampling will be conducted at four direct-push locations (RC-6, RC-7, RC-8, and RC-9) located in Area 6C and Area RS-2 downgradient of Area 6A, to determine if soil contamination is impacting groundwater. Additionally, these samples will help assess any groundwater impacts migrating from farther upgradient in Area 1B, towards the river, as discussed in Section 3.2. Groundwater samples from these borings will be analyzed for PAHs, tributyltin, and diesel/motor oil. Proposed direct-push groundwater sampling locations are shown on Figure 2.

3.12 AREA 6B

It is expected that most of Area 6B will be covered by a ball field when redeveloped. Aroclor 1260 was detected in the MIS surface soil sample at a concentration of 29 µg/kg, which is below the JSCS screening level for Aroclor 1260 (200 µg/kg), but above the screening level for total PCBs (0.39 µg/kg). PCBs were not detected in either of the two deeper MIS samples. The PAH compound indeno(1,2,3-cd)pyrene (220 µg/kg) and lead (36 mg/kg) were also detected above screening levels (100 µg/kg and 17 mg/kg, respectively) in the MIS surface soil sample, but not at depth. For the purposes of the EE/CA, Area 6B soils will be assumed to be contaminated with PCBs, PAHs, and lead in surface soils. The groundwater sampling to be conducted downgradient of Area 6A will help determine if soil conditions are impacting groundwater downgradient of this area, prior to discharge to the river.

3.13 AREA 6C

As noted in Section 3.11, direct-push groundwater sampling will be conducted in Area 6C to characterize groundwater directly downgradient of Area 6A. Three direct-push borings (RC-6 through RC-8) will be installed, as shown in Figure 6, and grab groundwater samples will be collected for analysis of PAHs, tributyltin, and TPH-D.

Soils over the majority of Area 6C have been well characterized. The MIS composite soil samples collected from surface soils and from the depth range 1 to 5 feet contained Aroclor 1260 at concentrations of 91 µg/kg and 23 µg/kg, respectively, which are below the JSCS screening level for Aroclor 1260 (200 µg/kg), but above the screening level for total PCBs (0.39 µg/kg). PCBs were not detected in the deeper MIS sample. Lead (13-89 mg/kg)

and TPH (192-539 mg/kg) were also detected in MIS samples above screening levels (17 mg/kg and 500 mg/kg, respectively). Further sampling is not necessary in this area.

Area 6C includes a subarea (Area A6-14B) that was proposed for excavation by DEQ, based on elevated PAH and PCB concentrations. This area was excluded from the MIS sampling. In order to enable cleanup decisions in the EE/CA for this area, the historical discrete data that led to identifying Area A6-14B for excavation, as well as subsequent confirmation discrete sampling conducted by AMEC, were reviewed to determine if additional sampling may be necessary. Historical data are shown in Table 7. Area A6-14B also extends partly into Area RS-1d and RS-1c.

DEQ's proposed Excavation Area A6-14B (Figure 6) is located around the historical sample locations GP-126, GP-171, GP-172, and GP-173, direct-push samples collected in June 1999 and August 2000. Samples collected at GP-126, GP-171, and GP-172 were analyzed for PCBs. Results showed elevated concentrations of PCBs ranging from 150 to 1,300 µg/kg in samples collected at depths of 0.5 foot to 7 feet. Additionally, samples collected at GP-173 and to a lesser extent GP-172 showed elevated concentrations of PAHs.

Three borings (DP-A6-51 through DP-A6-53) were conducted by AMEC in December 2005 to confirm the results; however, conditions at the site had changed significantly since the earlier sampling events. A ramp down to the Willamette River had been cut in this area for use by barges accessing the neighboring McCormick & Baxter site for remediation. As a result, the surface grade was different for the 2005 sampling than it had been for the 1999/2000 sampling, and contaminated material is likely to have been disturbed as part of the ramp construction. Borings DP-A6-51 through DP-A6-53 were each sampled for analysis of PCBs at depths of 5 and 8 feet, and DP-A6-52 was sampled for analysis of PAHs. PCBs were not detected in any of the samples, and PAHs were not detected above the JSCS screening levels. Maps depicting the historical sample locations indicate that DP-A6-51 and DP-A6-52 were completed quite close to the 1999/2000 sample locations. To confirm this hypothesis, AMEC Geomatrix will use a global positioning system (GPS) to locate the ramp location so that it may be compared to the location of the historical borings. No further investigation is necessary in Area 6C to complete the EE/CA.

3.14 AREA 6D

Most of Area 6D is planned for development, including a building, part of a ball field, and parking. Area 6D was well characterized during MIS sampling for most constituents. Aroclor 1260 was detected in the MIS surface soil sample from Area 6D at a concentration of 33 µg/kg, which is below the JSCS screening level for Aroclor 1260 (200 µg/kg), but above the screening level for total PCBs (0.39 µg/kg). PCBs were not detected in either of the deeper

MIS samples. Lead was also detected in the MIS surface soil sample at a concentration of 32 mg/kg, which is above the JSCS screening level of 17 mg/kg. TPH was detected in the deepest MIS sample at a concentration of 640 mg/kg, which is above the JSCS screening level (500 mg/kg), but concentrations of TPH were below screening levels in the two shallower intervals.

Additional characterization of Area 6D soils for dioxins is warranted prior to the EE/CA. Dioxin levels above the screening level were detected in the MIS surface soil sample from Area 6D. Based on the planned use of this area, Area 6D will be divided into three smaller subareas for MIS sampling of surface soils (0 to 1 foot), with 30 individual locations in each subarea. The composited MIS samples will be analyzed for dioxins. Figure 7 shows the 6D subareas, termed Areas 6D1, 6D2, and 6D3, and an approximate representation of the locations for the 30 individual sample points within each subarea. The actual locations of sample points for MIS will be established in the field using a systematic random sample design (Hawaii Department of Health, 2008). Additionally, the archived B interval MIS sample (depth range of 1 to 5 feet) will be analyzed to determine if elevated dioxin levels exist at depth.

Groundwater conditions will be assessed along the northwestern margin of Area 6D near the property boundary with the McCormick & Baxter property to evaluate pentachlorophenol concentrations in groundwater, since elevated concentrations are known to be present nearby on the McCormick & Baxter property. Direct-push groundwater samples will be collected for analysis of pentachlorophenol from four direct-push locations (RC-10, RC-11, RC-12, and RC-13) near the property boundary, as shown in Figure 7.

3.15 AREA RS-1

The RS areas were separated from the other parcels to evaluate conditions along the riverfront. Since habitat redevelopment will likely occur along the shoreline, and since regrading the slope would be an expected outcome of habitat development, additional data are needed to evaluate costs. The presence of dioxins in the soil would impact options for soil disposal. Therefore, any planned excavation in this area could result in large unexpected costs, and data to evaluate that potential are needed for the EE/CA. Dioxins, PAHs, total PCBs, and tributyltin were all detected above screening levels in the MIS samples. For purposes of the EE/CA, soils will be assumed to be contaminated with PCBs, PAHs, and tributyltin. However, more precise delineation of dioxins is necessary to determine if only parts of Area RS-1 are affected.

The area will be divided into four separate smaller areas for MIS sampling of surface soils (0 to 1 foot), with 30 individual locations in each area (Figure 6). The MIS samples will be analyzed for dioxins. Figure 6 shows the RS-1 subareas, termed Areas RS-1a, RS-1b, RS-1c, and

RS-1d, and an approximate representation of the locations for the 30 MIS sample points within each subarea. The actual locations for MIS sample points will be established in the field using a systematic random sample design (Hawaii Department of Health, 2008). Additionally, the archived B-interval sample (depth range of 1 to 5 feet) will be analyzed for dioxins to evaluate whether deeper soils in this area are affected. The archived C-interval sample (depth range of 5 to 10 feet) will be analyzed if the B-interval sample contains a concentration of dioxins above screening levels.

3.16 AREA RS-2

As noted in Section 3.11, direct-push groundwater sampling will be conducted in Area RS-2 to characterize groundwater directly downgradient of Area 6A. One direct-push boring (RC-9) will be installed in Area RS-2, as shown in Figure 5, and grab groundwater samples will be collected for analysis of PAHs, tributyltin, and TPH-D.

Area RS-2 was well characterized during MIS sampling. Aroclor 1260 and Aroclor 1254 were detected in the MIS surface soil sample at concentrations of 120 µg/kg and 72 µg/kg, respectively, which are below the JSCS screening levels for Aroclor 1260 and Aroclor 1254 (200 and 300 µg/kg, respectively), but above the screening level for total PCBs (0.39 µg/kg). PCBs were not detected in either of the two deeper MIS samples. Lead was also detected in the MIS surface soil sample at a concentration (33 mg/kg) greater than JSCS screening level of 17 mg/kg, but lead concentrations were below the screening level in the deeper samples. Tributyltin was detected in the MIS soil samples from Area RS-2 at concentrations (6.1 µg/kg to 26 µg/kg) above the screening level of 2.3 µg/kg. For purposes of the EE/CA, soils will be assumed to be contaminated with PCBs, lead, and tributyltin, and planned for accordingly.

Area RS-2 also includes a subarea (proposed Excavation Area A5-12A/12B), which extends into Area 5A, that was planned for excavation by DEQ, based on elevated PCB and petroleum hydrocarbon concentrations, as described in Section 3.9. Area RS-2 also includes a second subarea (proposed Excavation Area A5-13) that was proposed for excavation by DEQ, based on elevated PCB concentrations. These areas were excluded from the MIS sampling. In order to enable cleanup decisions in the EE/CA for these areas, the historical discrete data that led to identifying these areas for excavation, as well as data from subsequent confirmation discrete sampling conducted by AMEC, were reviewed to determine if additional sampling may be necessary. Historical data are included in Table 6.

DEQ's proposed Excavation Area A5-13 (Figure 5) is located surrounding the historical sample location GP-79, a direct-push sample collected in June 1999. The samples collected at a depth of 0.5 foot at GP-79 showed a total PCBs concentration (2,400 µg/kg) above the JSCS screening level (0.39 µg/kg); PCBs were not detected in samples collected at depth.

Nearby sample locations GP-151 and GP-152, sampled in August 2000, also showed PCBs (120 to 200 µg/kg) in shallow soils. Two borings (DP-A5-48 and DP-A5-49) were conducted by AMEC in December 2005 approximately 15 feet away from GP-79 to confirm the results. The borings were sampled at a depth of 0.5 foot for PCBs. PCBs were not detected in either of the 2005 samples; however, GP-151 and GP-152 were located farther away from GP-79 than the 2005 locations, indicating that the small proposed excavation area around GP-79 may not address all PCB contamination in this area. MIS PCB results for Area RS-2, described above, were consistent with the historical results. For the purposes of the EE/CA, all soils in Area RS-2, including Excavation Area A5-13, will be assumed to be contaminated with PCBs, and planned for accordingly.

3.17 AREA RS-3

The majority of Area RS-3 has been well characterized, and MIS sampling indicates that further sampling is not necessary in this area. Aroclor 1260 was detected in the MIS surface soil sample at a concentration of 58 µg/kg, which is below the JSCS screening for Aroclor 1260 (200 µg/kg), but above the screening level for total PCBs (0.39 µg/kg). PCBs were not detected in either of the deeper MIS samples. Lead was also detected above the screening level (17 mg/kg) in MIS samples in all three depth intervals at concentrations ranging from 30 to 37 mg/kg. Dioxins were detected at concentrations above screening levels in the MIS surface soil sample, but only above the human health risk levels, and not above the screening level protective of sediment. The archived B-interval (depth range of 1 to 5 feet) MIS sample will be analyzed to determine if elevated levels of dioxins are present at depth. Additionally, Area RS-3 includes two subareas that were planned for excavation by DEQ, based on elevated PAH and PCB concentrations. These areas were excluded from the MIS sampling. In order to enable cleanup decisions in the EE/CA for this area, the historical discrete data that led to identifying this area for excavation, as well as subsequent confirmation discrete sampling conducted by AMEC, were reviewed. Historical data are included in Table 8.

DEQ's proposed Excavation Area A4-5 (Figure 8) is located surrounding the historical sample locations of GP-73 (a direct-push boring conducted in June 1999) and GP-149 (a direct-push boring conducted in August 2000). Analytical results showed a PCB concentration of 5,020 µg/kg for the sample collected at a depth of 5 feet at GP-73 and low-level PAHs in samples collected at depths of 0.5 feet and 4 feet at GP-149. The PAHs were deemed a concern due to the proximity to the river. Three borings (DP-A4-15, DP-A4-16, and DP-A4-17) were conducted by AMEC in November 2005 to confirm the results. Borings DP-A4-15, DP-A4-16, and DP-A4-17 were located approximately 15 feet away from the GP-73 and GP-149 locations and sampled at depths of 6 to 8 feet. Results for these samples showed varying concentrations of PAHs. The only exceedances of the JSCS screening levels in these

samples occurred in the sample collected at a depth of 6 feet at DP-A4-17, with concentrations of 2,000 µg/kg of chrysene, 310 µg/kg of benzo(g,h,i)perylene, and 380 µg/kg of indeno(1,2,3-cd)pyrene. The review of existing data indicates that this area is sufficiently characterized for the purposes of the EE/CA. No further sampling is proposed to characterize this proposed excavation area.

DEQ's proposed Excavation Area A4-8 (Figure 8) is located surrounding the historical sample locations GP-59 (a direct-push boring conducted in May 1999) and GP-143 (a direct-push boring conducted in August 2000). Low-level PAHs were detected at these locations, mostly below JSCS screening levels. Six borings (DP-A4-23 through DP-A4-28) were conducted by AMEC in November 2005 to confirm the results. The borings were located approximately 15 feet away from the GP-59 and GP-143 locations and sampled at depths of 4 to 16 feet. Results for these samples were mostly non-detect for PAHs. The only exceedances of the JSCS screening levels were for 2-methylnaphthalene and indeno(1,2,3-cd)pyrene in the sample collected at a depth of 14.5 feet at DP-A4-23. The review of existing data indicates that Area A4-8 is sufficiently characterized for the purposes of the EE/CA. No further sampling is proposed to characterize this area.

4.0 SCHEDULE AND REPORTING

AMEC will mobilize to conduct the sampling activities described in this Work Plan within 30 days following approval of the Work Plan. Results of these sampling activities will be included in and utilized for completion of the EE/CA.

5.0 REFERENCES

AMEC (AMEC Earth & Environmental), 2006a, GY Method Investigation Work Plan and Sampling and Analysis Plan, Triangle Park Property, Portland, Oregon: Prepared for the University of Portland, Portland Oregon, September.

AMEC, 2006b, Sampling Investigation Work Plan and Sampling And Analysis Plan, Triangle Park Property, Portland, Oregon: Prepared for the University of Portland, Portland Oregon, October.

AMEC, 2006c, Removal Action Investigation Report, Triangle Park Property, Portland, Oregon: Prepared for the University of Portland, Portland Oregon, December.

AMEC Geomatrix (AMEC Geomatrix, Inc.), 2009, Building Demolition and Focused Subsurface Site Investigation Work Plan, University of Portland River Campus Property, 5828 North Van Houten Place, Portland, Oregon: Prepared for the University of Portland, Portland, Oregon, April.

Geomatrix (Geomatrix Consultants, Inc.), 2008, March 20, 2008 Meeting Notes Memorandum submitted to EPA: Prepared for the University of Portland, Portland, Oregon, March.

ODEQ (Oregon Department of Environmental Quality), 2007, Portland Harbor Joint Source Control Strategy, Table 3-1: Screening Level Values for Soil/Stormwater Sediment, Stormwater, Groundwater, and Surface Water, July 16 (available at http://www.deq.state.or.us/lq/cu/nwr/PortlandHarbor/docs/JSCSFinalTable03_1.pdf).

Hawaii Department Of Health, 2008, Technical Guidance Manual for the Implementation of the Hawaii State Contingency Plan, Interim Final: State of Hawaii, Department of Health, Office of Hazard Evaluation and Emergency Response, November 12.

TABLES

TABLE 1

SAMPLE COLLECTION AND ANALYSES
University of Portland River Campus Property
Portland, Oregon

Matrix	Sampling Method	Location ID	Depth (feet)	Analyses						
				PAHs	Lead	TPH-D	PCBs	Tributyltin	Pentachlorophenol	Dioxins
			EPA Method	8270M-SIM	6010B/6020	NWTPH-Dx	8082	8270D	8041M	1613B
			Container	8 oz Jar	8 oz Jar	8 oz Jar	8 oz Jar	8 oz Jar	8 oz Jar	4 oz Jar
			Preservative	None	None	None	None	None	None	None
			Preparation	Cool, 4°C	Cool, 4°C	Cool, 4°C	Cool, 4°C	Cool, 4°C	Cool, 4°C	Cool, 4°C
			Hold Time	14/40 Days	6-8 Months	14 Days	14/40 Days	14/40 Days	14/40 Days	1 Year
			Reporting Limit - soil	5.0 µg/kg	2 mg/kg	5.0 mg/kg	4 µg/kg	4 µg/kg	6.25 µg/kg	TBD
			Reporting Limit - water	0.1 µg/L	20 µg/L	0.25 mg/L	0.01 µg/L	0.2 µg/L	0.25 µg/L	TBD
Area 1A										
None										
Area 1B										
None										
Area 1C										
None										
Area 2A										
Soil	MIS	2A1-1 through 2A1-30	0-1, 1-5, 5-10	X	X		X			
Soil	MIS	2A1-1 through 2A1-33	10-12	X	X		X			
Area 2B										
Groundwater	Discrete	RC-1	20-25	X						
Groundwater	Discrete	RC-2	20-25	X						
Soil	Discrete	RC-2	2			X				
Soil	Discrete	RC-2	4			X				
Soil	Discrete	RC-4	2			X				
Soil	Discrete	RC-4	4			X				
Area 3A										
None										
Area 3B										
Soil	MIS	3B1-1 through 3B1-30	0-1				X			
Soil	MIS	3B2-1 through 3B2-30	0-1				X			
Soil	MIS	3B3-1 through 3B3-30	0-1				X			
Soil	MIS	3B4-1 through 3B4-30	0-1				X			
Area 4										
None										
Area 5A										
Soil	Discrete	RC-5	5	X						
Soil	Discrete	RC-5	8	X						
Area 5B										
Groundwater	Discrete	RC-3	20-25	X						

TABLE 1

SAMPLE COLLECTION AND ANALYSES
University of Portland River Campus Property
Portland, Oregon

Matrix	Sampling Method	Location ID	Depth (feet)	Analyses						
				PAHs	Lead	TPH-D	PCBs	Tributyltin	Pentachlorophenol	Dioxins
Area 6A										
Groundwater	Discrete	RC-6	20-25	X		X		X		
Groundwater	Discrete	RC-7	20-25	X		X		X		
Groundwater	Discrete	RC-8	20-25	X		X		X		
Area 6B										
None										
Area 6C										
None										
Area 6D										
Groundwater	Discrete	RC-10	20-25						X	
Groundwater	Discrete	RC-11	20-25						X	
Groundwater	Discrete	RC-12	20-25						X	
Groundwater	Discrete	RC-13	20-25						X	
Soil	MIS	6D1-1 through 6D1-30	0-1							X
Soil	MIS	6D2-1 through 6D2-30	0-1							X
Soil	MIS	6D3-1 through 6D3-30	0-1							X
Soil	MIS	Archived sample 6D(B)	1-5							X
Area RS-1										
Soil	MIS	RS-1a-1 through RS-1a-30	0-1							X
Soil	MIS	RS-1b-1 through RS-1b-30	0-1							X
Soil	MIS	RS-1c-1 through RS-1c-30	0-1							X
Soil	MIS	RS-1d-1 through RS-1d-30	0-1							X
Soil	MIS	Archived sample RS-1(B)	1-5							X
Soil	MIS	Archived sample RS-1(C)	1-5							TBD
Area RS-2										
Groundwater	Discrete	RC-9	20-25	X		X		X		
Area RS-3										
Soil	MIS	Archived sample RS-3(B)	1-5							X

Abbreviations
°C = degrees Celsius
µg/kg = micrograms per kilogram
mg/kg = milligrams per kilogram
MIS = multi-incremental sampling
PAHs = polycyclic aromatic hydrocarbons
PCBs = polychlorinated biphenyls
TBD = to be determined
TPH-D = total petroleum hydrocarbons, diesel range

TABLE 2

PROJECT ROLES AND RESPONSIBILITIES
University of Portland River Campus Property
Portland, Oregon

Agency/Organization	Personnel	Title/Role	Responsibilities
EPA	Mark Ader	Remedial Project Manager	Implementing regulatory agency for the project.
	Rene Fuentes	Project Hydrogeologist	Provide technical guidance for the EPA.
	Jennifer MacDonald	Attorney	Provide legal counsel for the EPA.
University of Portland	Paul Luty		The University of Portland has signed a Bona Fide Prospective Purchaser Agreement and Order on Consent for Limited Removal Action. Under this Agreement, the University of Portland agrees to perform a removal action in the form of soil and groundwater investigation work at the River Campus property.
	James Kuffner		
Landye Bennett Blumstein LLP	David Blount	Attorney	Provide legal counsel for the University of Portland.
AMEC Geomatrix, Inc.	Gary Dupuy	Principal Hydrogeologist	Perform overall management of the project. Mr. Dupuy is AMEC's primary point of contact with the University of Portland and EPA. AMEC has prepared a work plan and health and safety plan for the project. AMEC will manage all field sampling activities and reporting to the University of Portland and EPA.
	Natasya Gray	Project Geologist	
	Toni Olson	Staff Geologist	
	Crystal Nierby	Project Chemist	
Locates Down Under	Carson Smith	Utility Locator	Provide utility locating services for the project and clear utilities at each boring location.
Drilling Company	TBD	Project Driller	Provide all equipment and personnel required to drill borings that allow for collection of soil and groundwater samples at the site.
ARI Laboratories	Laboratory Staff	Laboratory Staff	Prepare soil samples for analysis (grinding and creation of multi-incremental samples) and conduct all soil sample analytical testing.

TABLE 3

AREA 2A HISTORICAL DATA[1]

University of Portland River Campus Property

Portland, Oregon

Sample ID/ Location	Date	Depth (feet)	Aroclor 1016	Aroclor 1221	Aroclor 1232	Aroclor 1242	Aroclor 1248	Aroclor 1254	Aroclor 1260	Total PCBs	Lead	2-Chloronaphthalene	2-Methylnaphthalene	Acenaphthene	Acenaphthylene	Anthracene	Benzo(a)anthracene	Benzo(a)pyrene	Benzo(b)fluoranthene	Benzo(g,h,i)perylene	Benzo(k)fluoranthene	Chrysene	Dibenz(a,h)anthracene	Fluoranthene	Fluorene	Indeno(1,2,3-cd)pyrene	Naphthalene	Phenanthrene	Pyrene
			µg/kg								mg/kg	µg/kg																	
JSCS Screening Level			**530**	**--**	**--**	**--**	**1500**	**300**	**200**	**0.39**	**17**		**200**	**300**	**200**	**845**	**1,050**	**1,450**	**--**	**300**	**13,000**	**1,290**	**1,300**	**2,230**	**300**	**100**	**561**	**1,170**	**1,520**
EPA Regional Screening Level (RSL)		**Residential**	**3,900**	**170**	**170**	**220**	**220**	**220**	**220**	**--**	**400**	**6.3E+06**	**NE**	**3.4E+06**	**NE**	**1.7E+07**	**150**	**15**	**150**	**NE**	**1.5E+03**	**1.5E+04**	**NE**	**2.3E+06**	**2.3E+06**	**150**	**3,900**	**NE**	**1.7E+06**
		Industrial	**21,000**	**620**	**620**	**740**	**740**	**740**	**740**	**--**	**800**	**8.2E+07**	**NE**	**3.3E+07**	**NE**	**1.7E+08**	**2,100**	**210**	**2,100**	**NE**	**2.1E+04**	**2.1E+05**	**NE**	**2.2E+07**	**2.2E+07**	**2,100**	**20,000**	**NE**	**1.7E+07**
MIS A	10/2006	0-1	ND	ND	ND	ND	ND	ND	58	58	84	--	--	260	ND	420	510	560	370	240	380	610	ND	1,300	310	230	200	1,900	1,200
MIS B	10/2006	1-5	ND	ND	ND	ND	ND	ND	ND	ND	29	--	--	ND	ND	ND	ND	ND	ND	ND	ND	40	ND	51	ND	ND	ND	35	54
MIS C	10/2006	5-10	ND	ND	ND	ND	ND	ND	ND	ND	6	--	--	ND	ND	ND	40	ND	ND	ND	ND	38	ND	66	ND	ND	ND	ND	66
WS-2A-16	10/30/06	9-10	--	--	--	--	--	--	--	--	--	--	--	630	ND	ND	ND	ND	ND	ND	ND	1,600	ND	ND	2,900	ND	ND	ND	470

Notes

1. Data qualifiers are as follows:
   ND = analyte not detected.

Abbreviations

µg/kg = micrograms per kilogram

mg/kg = milligrams per kilogram

TABLE 4

AREA 2B HISTORICAL DATA[1]
University of Portland River Campus Property
Portland, Oregon

Sample ID/ Location	Date	Depth (feet)	Diesel (mg/kg)	Motor Oil (mg/kg)	Aroclor 1016	Aroclor 1221	Aroclor 1232	Aroclor 1242	Aroclor 1248	Aroclor 1254	Aroclor 1260	Total PCBs	Arsenic	Lead	2-Chloronaphthalene	2-Methylnaphthalene	Acenaphthene	Acenaphthylene	Anthracene	Benzo(a)anthracene	Benzo(a)pyrene	Benzo(b)fluoranthene	Benzo(g,h,i)perylene	Benzo(k)fluoranthene	Chrysene	Dibenz(a,h)anthracene	Fluoranthene	Fluorene	Indeno(1,2,3-cd)pyrene	Naphthalene	Phenanthrene	Pyrene
					(µg/kg)								(mg/kg)		µg/kg																	
JSCS Screening Level			**500**		**530**	--	--	--	**1500**	**300**	**200**	**0.39**	**7**	**17**		**200**	**300**	**200**	**845**	**1,050**	**1,450**	**NE**	**300**	**13,000**	**1,290**	**1,300**	**2,230**	**300**	**100**	**561**	**1,170**	**1,520**
EPA Regional		**Residential**	--	--	**3,900**	**170**	**170**	**220**	**220**	**220**	**220**	--	**0.39**	**400**	**6.3E+06**	**NE**	**3.4E+06**	**NE**	**1.7E+07**	**150**	**15**	**150**	**NE**	**1.5E+03**	**1.5E+04**	**NE**	**2.3E+06**	**2.3E+06**	**150**	**3,900**	**NE**	**1.7E+06**
Screening Level (RSL)		**Industrial**	--	--	**21,000**	**620**	**620**	**740**	**740**	**740**	**740**	--	**1.6**	**800**	**8.2E+07**	**NE**	**3.3E+07**	**NE**	**1.7E+08**	**2,100**	**210**	**2,100**	**NE**	**2.1E+04**	**2.1E+05**	**NE**	**2.2E+07**	**2.2E+07**	**2,100**	**20,000**	**NE**	**1.7E+07**
MIS A	10/2006	0-1	37	150	ND	ND	ND	ND	ND	ND	90 J	90	7.8	60	--	--	ND	ND	ND	ND	ND	ND	ND	ND	ND	ND	34	ND	ND	ND	ND	39
MIS B	10/2006	1-5	21	68	ND	ND	ND	ND	ND	ND	ND	ND	1.6	20	--	--	ND	ND	ND	49	33	35	ND	38	61	ND	100	ND	ND	ND	80	100
MIS C	10/2006	5-10	8	26	ND	ND	ND	ND	ND	ND	ND	ND	1.8	5	--	--	ND	ND	ND	38	34	ND	ND	ND	44	ND	71	ND	ND	ND	47	68
WS-2B(0-2)	10/27/2006	2	490	2,200	--	--	--	--	--	--	--	--	--	--	--	--	ND	ND	ND	ND	ND	ND	ND	ND	ND	ND	ND	ND	ND	ND	ND	ND
WS-2A(9.0-	10/30/2006	10	10,000	17,000	--	--	--	--	--	--	--	--	--	--	--	--	630	ND	ND	ND	ND	ND	ND	ND	1600	ND	ND	2900	ND	ND	ND	470
GP-24	5/25/1999	0.5	--	--	--	--	--	--	--	--	--	--	--	80	--	--	--	--	--	--	--	--	--	--	--	--	--	--	--	--	--	--
GP-24	5/25/1999	5	--	--	--	--	--	--	--	--	--	--	--	3.7	--	--	--	--	--	--	--	--	--	--	--	--	--	--	--	--	--	--
GP-24	5/25/1999	13.5	--	--	--	--	--	--	--	--	--	--	--	11	--	--	--	--	--	--	--	--	--	--	--	--	--	--	--	--	--	--
GP-25	6/1/1999	0.5	--	--	--	--	--	--	--	--	--	--	--	88	--	--	--	--	--	--	--	--	--	--	--	--	--	--	--	--	--	--
GP-25	6/1/1999	5	--	--	--	--	--	--	--	--	--	--	--	3.2	--	--	--	--	--	--	--	--	--	--	--	--	--	--	--	--	--	--
GP-25	6/1/1999	14.5	--	--	--	--	--	--	--	--	--	--	--	4.2	--	--	--	--	--	--	--	--	--	--	--	--	--	--	--	--	--	--
GP-26	5/25/1999	0.5	--	--	--	--	--	--	--	--	--	--	--	55	--	--	--	--	--	--	--	--	--	--	--	--	--	--	--	--	--	--
GP-26	5/25/1999	5	--	--	--	--	--	--	--	--	--	--	--	2.8	--	--	--	--	--	--	--	--	--	--	--	--	--	--	--	--	--	--
GP-26	5/25/1999	11	--	--	--	--	--	--	--	--	--	--	--	2.6	--	--	--	--	--	--	--	--	--	--	--	--	--	--	--	--	--	--
GP-27	5/25/1999	0.5	ND	--	ND	ND	ND	ND	ND	ND	ND	ND	2.3	12	--	--	--	--	ND	4.5	5.4	10	5.4	ND	4.5	ND	6.7	ND	4.5	ND	4	7.2
GP-27	5/25/1999	5	ND	--	ND	ND	ND	ND	ND	110	ND	110	3.4	26	--	--	--	--	ND	8.4	9.9	15	8.9	7.4	11	ND	18	ND	7.9	ND	7.4	22
GP-27	5/25/1999	13	ND	--	ND	ND	ND	ND	ND	ND	ND	ND	2.1	6.8	--	--	--	--	ND	4.7	6.5	8.6	4.3	3.9	6	ND	9.1	ND	3.9	ND	ND	11
GP-28	5/25/1999	0.5	ND	--	ND	ND	ND	ND	ND	ND	ND	ND	1	11	--	--	--	--	ND	ND	4.3	7.2	3.8	ND	ND	ND	5.2	ND	ND	ND	ND	5.7
GP-28	5/25/1999	5	ND	--	ND	ND	ND	ND	ND	ND	ND	ND	2.2	3.5	--	--	--	--	46	130	120	150	46	24	130	ND	240	5.9	47	4.4	84	270
GP-28	5/25/1999	11	ND	--	ND	ND	ND	ND	ND	ND	ND	ND	1.6	2.4	--	--	--	--	ND	ND	ND	ND	ND	ND	ND	ND	5.3	ND	ND	ND	ND	6.7
GP-29	5/25/1999	0.5	ND	--	ND	ND	ND	ND	ND	ND	ND	ND	2.6	40	--	--	--	--	4.7	55	66	93	41	39	77	6.1	140	ND	35	ND	9.4	240
GP-29	5/25/1999	5	ND	--	ND	ND	ND	ND	ND	ND	ND	ND	4.9	13	--	--	--	--	ND	ND	ND	ND	ND	ND	ND	ND	ND	ND	ND	ND	ND	ND
GP-29	5/25/1999	11	--	--	--	--	--	--	--	--	--	--	1.8	--	--	--	--	--	--	--	--	--	--	--	--	--	--	--	--	--	--	--
GP-30	5/25/1999	0.5	64	--	ND	ND	ND	ND	ND	ND	ND	ND	2.5	77	--	--	--	--	8.6	38	52	78	39	6.7	54	ND	77	ND	34	19	29	98
GP-30	5/25/1999	5	ND	--	ND	ND	ND	ND	ND	ND	ND	ND	2.2	2.5	--	--	--	--	ND	ND	ND	ND	ND	ND	ND	ND	ND	ND	ND	ND	ND	ND
GP-31	5/25/1999	0.5	ND	--	ND	ND	ND	ND	ND	ND	ND	ND	1.8	43	--	--	--	--	4.2	32	34	62	24	5.6	36	4.2	48	ND	22	3.8	9.4	59
GP-31	5/25/1999	5	ND	--	ND	ND	ND	ND	ND	ND	ND	ND	2	3	--	--	--	--	ND	ND	ND	ND	ND	ND	ND	ND	ND	ND	ND	ND	ND	ND
GP-31	5/25/1999	9.5	46	--	ND	ND	ND	ND	ND	ND	ND	ND	2.1	38	--	--	--	--	6.4	19	18	32	12	ND	17	ND	28	ND	11	4.6	12	32
GP-32	5/25/1999	0.5	--	--	--	--	--	--	--	--	--	--	1.4	52	--	--	--	--	ND	ND	ND	ND	ND	ND	ND	ND	ND	ND	ND	ND	4.1	ND
GP-32	5/25/1999	5	--	--	--	--	--	--	--	--	--	--	2.1	3.5	--	--	--	--	4.5	24	25	29	9.5	4.5	21	ND	40	ND	10	4	7	41
GP-32	5/25/1999	15	--	--	--	--	--	--	--	--	--	--	1.1	3.5	--	--	--	--	ND	ND	ND	ND	ND	ND	ND	ND	ND	ND	ND	ND	ND	ND
GP-33	5/26/1999	0.5	25	--	ND	ND	ND	ND	ND	ND	ND	ND	2	12	--	--	--	--	--	--	--	--	--	--	--	--	--	--	--	--	--	--
GP-33	5/26/1999	5	ND	--	ND	ND	ND	ND	ND	ND	ND	ND	1.3	5.3	--	--	--	--	--	--	--	--	--	--	--	--	--	--	--	--	--	--
GP-33	5/26/1999	15	ND	--	ND	ND	ND	ND	ND	ND	ND	ND	1.2	3.9	--	--	--	--	--	--	--	--	--	--	--	--	--	--	--	--	--	--
GP-34	5/26/1999	0.5	--	--	--	--	--	--	--	--	--	--	1.7	12	--	--	--	--	ND	ND	ND	ND	ND	ND	ND	ND	4.7	ND	ND	7.4	6.6	6.2

TABLE 4

AREA 2B HISTORICAL DATA[1]
University of Portland River Campus Property
Portland, Oregon

Sample ID/ Location	Date	Depth (feet)	Diesel (mg/kg)	Motor Oil (mg/kg)	Aroclor 1016 (µg/kg)	Aroclor 1221 (µg/kg)	Aroclor 1232 (µg/kg)	Aroclor 1242 (µg/kg)	Aroclor 1248 (µg/kg)	Aroclor 1254 (µg/kg)	Aroclor 1260 (µg/kg)	Total PCBs (µg/kg)	Arsenic (mg/kg)	Lead (mg/kg)	2-Chloronaphthalene (µg/kg)	2-Methylnaphthalene (µg/kg)	Acenaphthene (µg/kg)	Acenaphthylene (µg/kg)	Anthracene (µg/kg)	Benzo(a)anthracene (µg/kg)	Benzo(a)pyrene (µg/kg)	Benzo(b)fluoranthene (µg/kg)	Benzo(g,h,i)perylene (µg/kg)	Benzo(k)fluoranthene (µg/kg)	Chrysene (µg/kg)	Dibenz(a,h)anthracene (µg/kg)	Fluoranthene (µg/kg)	Fluorene (µg/kg)	Indeno(1,2,3-cd)pyrene (µg/kg)	Naphthalene (µg/kg)	Phenanthrene (µg/kg)	Pyrene (µg/kg)
JSCS Screening Level			**500**		**530**	**--**	**--**	**--**	**1500**	**300**	**200**	**0.39**	**7**	**17**		**200**	**300**	**200**	**845**	**1,050**	**1,450**	**NE**	**300**	**13,000**	**1,290**	**1,300**	**2,230**	**300**	**100**	**561**	**1,170**	**1,520**
EPA Regional Screening Level (RSL)		**Residential**	**--**	**--**	**3,900**	**170**	**170**	**220**	**220**	**220**	**220**	**--**	**0.39**	**400**	**6.3E+06**	**NE**	**3.4E+06**	**NE**	**1.7E+07**	**150**	**15**	**150**	**NE**	**1.5E+03**	**1.5E+04**	**NE**	**2.3E+06**	**2.3E+06**	**150**	**3,900**	**NE**	**1.7E+06**
		Industrial	**--**	**--**	**21,000**	**620**	**620**	**740**	**740**	**740**	**740**	**--**	**1.6**	**800**	**8.2E+07**	**NE**	**3.3E+07**	**NE**	**1.7E+08**	**2,100**	**210**	**2,100**	**NE**	**2.1E+04**	**2.1E+05**	**NE**	**2.2E+07**	**2.2E+07**	**2,100**	**20,000**	**NE**	**1.7E+07**
GP-34	5/26/1999	5	--	--	--	--	--	--	--	--	--	--	2.1	3.7	--	--	--	--	ND	ND	ND	6.5	ND	ND	ND	ND	5.1	ND	ND	ND	ND	5.6
GP-34	5/26/1999	15	--	--	--	--	--	--	--	--	--	--	1.1	4.4	--	--	--	--	21	30	32	41	ND	7	38	ND	74	ND	13	ND	64	110
GP-35	5/26/1999	1.5	37	--	--	--	--	--	--	--	--	--	2.6	57	--	--	--	--	--	--	--	--	--	--	--	--	--	--	--	--	--	--
GP-35	5/26/1999	5	ND	--	--	--	--	--	--	--	--	--	2.1	3.5	--	--	--	--	--	--	--	--	--	--	--	--	--	--	--	--	--	--
GP-35	5/26/1999	15	--	--	--	--	--	--	--	--	--	--	1.3	5.6	--	--	--	--	--	--	--	--	--	--	--	--	--	--	--	--	--	--
GP-36	5/26/1999	1.7	400	--	ND	ND	ND	ND	ND	ND	ND	ND	5.4	--	--	--	--	--	--	--	--	--	--	--	--	--	--	--	--	--	--	--
GP-36	5/26/1999	5	ND	--	ND	ND	ND	ND	ND	ND	ND	ND	1.8	2.8	--	--	--	--	--	--	--	--	--	--	--	--	--	--	--	--	--	--
GP-36	5/26/1999	15	ND	--	ND	ND	ND	ND	ND	ND	ND	ND	1.4	4	--	--	--	--	--	--	--	--	--	--	--	--	--	--	--	--	--	--
GP-37	5/26/1999	1.3	26,000	--	ND	ND	ND	ND	ND	ND	ND	ND	--	--	--	--	--	--	ND	190	ND	ND	ND	ND	ND	ND	ND	5600	ND	1600	7100	320
GP-37	5/26/1999	5	ND	--	ND	ND	ND	ND	ND	ND	ND	ND	--	--	--	--	--	--	ND	ND	ND	ND	ND	ND	ND	ND	ND	ND	ND	ND	5.1	ND
GP-37	5/26/1999	15	ND	--	ND	ND	ND	ND	ND	ND	ND	ND	--	--	--	--	--	--	ND	ND	ND	ND	ND	ND	ND	ND	ND	ND	ND	ND	ND	ND
GP-38	5/26/1999	0.5	50	--	ND	ND	ND	ND	ND	ND	ND	ND	1.7	30	--	--	--	--	ND	4.1	ND	7.9	6.2	ND	ND	ND	5.4	ND	ND	3.3	5.8	7.4
GP-38	5/26/1999	5	ND	--	ND	ND	ND	ND	ND	ND	ND	ND	0.79	2.7	--	--	--	--	ND	ND	ND	ND	ND	ND	ND	ND	ND	ND	ND	ND	ND	ND
GP-39	5/26/1999	0.45	240	--	ND	ND	ND	ND	ND	ND	ND	ND	1.2	29	--	--	--	--	4.3	5.6	7.3	8.6	7.7	7.3	7.7	ND	11	ND	ND	12	14	14
GP-39	5/26/1999	5	ND	--	ND	ND	ND	ND	ND	ND	ND	ND	1.7	2.6	--	--	--	--	ND	7.9	7.5	11	ND	ND	7.1	ND	13	ND	ND	ND	ND	14
GP-39	5/26/1999	15	--	--	--	--	--	--	--	--	--	--	2.4	--	--	--	--	--	--	--	--	--	--	--	--	--	--	--	--	--	--	--
GP-40	5/26/1999	0.5	59	--	ND	ND	ND	ND	ND	ND	ND	ND	0.95	8.6	--	--	--	--	ND	ND	ND	ND	ND	ND	ND	ND	ND	ND	ND	ND	ND	ND
GP-40	5/26/1999	5	ND	--	ND	ND	ND	ND	ND	ND	ND	ND	1.9	3.1	--	--	--	--	17	74	71	91	27	15	70	ND	130	ND	28	ND	21	140
GP-40	5/26/1999	12	--	--	--	--	--	--	--	--	--	--	2.5	--	--	--	--	--	72	150	160	170	56	75	110	4.6	280	5.5	59	6.8	120	290
GP-133	8/8/2000	0.7	350	--	--	--	--	--	--	--	--	--	--	--	--	--	--	--	--	--	--	--	--	--	--	--	--	--	--	--	--	--
GP-134	8/8/2000	0.7	100	--	--	--	--	--	--	--	--	--	--	--	--	--	--	--	--	--	--	--	--	--	--	--	--	--	--	--	--	--
GP-135	8/8/2000	1	1,800	--	--	--	--	--	--	--	--	--	--	--	--	--	--	--	--	--	--	--	--	--	--	--	--	--	--	--	--	--
GP-174	8/7/2000	0.5	--	--	--	--	--	--	--	--	--	--	--	550	--	--	--	--	--	--	--	--	--	--	--	--	--	--	--	--	--	--
TP-1	9/5/1996	0.5	--	--	ND	ND	ND	ND	ND	ND	ND	ND	--	4,260	--	--	--	--	--	--	--	--	--	--	--	--	--	--	--	--	--	--
TP-1	9/5/1996	4	--	--	--	--	--	--	--	--	--	--	--	1,550	--	--	--	--	--	--	--	--	--	--	--	--	--	--	--	--	--	--
TP-2	9/5/1996	0.5	--	--	ND	ND	ND	ND	ND	ND	ND	ND	--	ND	--	--	--	--	--	--	--	--	--	--	--	--	--	--	--	--	--	--
TP-4	9/5/1996	4	--	--	--	--	--	--	--	--	--	--	3	231	--	--	--	--	--	--	--	--	--	--	--	--	--	--	--	--	--	--
SB-15	2/8/1993	15	ND	293	--	--	--	--	--	--	--	--	--	--	--	--	--	--	ND	ND	ND	ND	ND	ND	ND	--	ND	ND	ND	--	ND	ND
DP-A2-01	11/28/2005	4	ND	97	--	--	--	--	--	--	--	--	--	--	--	--	--	--	--	--	--	--	--	--	--	--	--	--	--	--	--	--
DP-A2-01	11/28/2005	7	ND	680	--	--	--	--	--	--	--	--	--	--	--	ND	ND	ND	ND	ND	ND	ND	ND	ND	ND	ND	ND	ND	ND	ND	ND	ND
DP-A2-01	11/28/2005	2	ND	ND	--	--	--	--	--	--	--	--	--	--	--	ND	ND	ND	ND	ND	ND	ND	ND	ND	ND	ND	ND	ND	ND	ND	ND	ND
DP-A2-02	11/28/2005	4	ND	ND	--	--	--	--	--	--	--	--	--	--	--	--	--	--	--	--	--	--	--	--	--	--	--	--	--	--	--	--
DP-A2-02	11/28/2005	2	ND	750	--	--	--	--	--	--	--	--	--	--	--	--	--	--	--	--	--	--	--	--	--	--	--	--	--	--	--	--
DP-A2-03	11/28/2005	4	ND	ND	--	--	--	--	--	--	--	--	--	--	--	--	--	--	--	--	--	--	--	--	--	--	--	--	--	--	--	--
DP-A2-03	11/28/2005	2	ND	ND	--	--	--	--	--	--	--	--	--	--	--	--	--	--	--	--	--	--	--	--	--	--	--	--	--	--	--	--

TABLE 4

AREA 2B HISTORICAL DATA[1]
University of Portland River Campus Property
Portland, Oregon

Sample ID/ Location	Date	Depth (feet)	Diesel (mg/kg)	Motor Oil (mg/kg)	Aroclor 1016 (µg/kg)	Aroclor 1221 (µg/kg)	Aroclor 1232 (µg/kg)	Aroclor 1242 (µg/kg)	Aroclor 1248 (µg/kg)	Aroclor 1254 (µg/kg)	Aroclor 1260 (µg/kg)	Total PCBs (µg/kg)	Arsenic (mg/kg)	Lead (mg/kg)	2-Chloronaphthalene (µg/kg)	2-Methylnaphthalene (µg/kg)	Acenaphthene (µg/kg)	Acenaphthylene (µg/kg)	Anthracene (µg/kg)	Benzo(a)anthracene (µg/kg)	Benzo(a)pyrene (µg/kg)	Benzo(b)fluoranthene (µg/kg)	Benzo(g,h,i)perylene (µg/kg)	Benzo(k)fluoranthene (µg/kg)	Chrysene (µg/kg)	Dibenz(a,h)anthracene (µg/kg)	Fluoranthene (µg/kg)	Fluorene (µg/kg)	Indeno(1,2,3-cd)pyrene (µg/kg)	Naphthalene (µg/kg)	Phenanthrene (µg/kg)	Pyrene (µg/kg)
JSCS Screening Level			**500**		**530**	**--**	**--**	**--**	**1500**	**300**	**200**	**0.39**	**7**	**17**		**200**	**300**	**200**	**845**	**1,050**	**1,450**	**NE**	**300**	**13,000**	**1,290**	**1,300**	**2,230**	**300**	**100**	**561**	**1,170**	**1,520**
EPA Regional Screening Level (RSL)		**Residential**	**--**	**--**	**3,900**	**170**	**170**	**220**	**220**	**220**	**220**	**--**	**0.39**	**400**	**6.3E+06**	**NE**	**3.4E+06**	**NE**	**1.7E+07**	**150**	**15**	**150**	**NE**	**1.5E+03**	**1.5E+04**	**NE**	**2.3E+06**	**2.3E+06**	**150**	**3,900**	**NE**	**1.7E+06**
		Industrial	**--**	**--**	**21,000**	**620**	**620**	**740**	**740**	**740**	**740**	**--**	**1.6**	**800**	**8.2E+07**	**NE**	**3.3E+07**	**NE**	**1.7E+08**	**2,100**	**210**	**2,100**	**NE**	**2.1E+04**	**2.1E+05**	**NE**	**2.2E+07**	**2.2E+07**	**2,100**	**20,000**	**NE**	**1.7E+07**
DP-A2-04	11/28/2005	4	ND	ND	--	--	--	--	--	--	--	--	--	--	--	--	--	--	--	--	--	--	--	--	--	--	--	--	--	--	--	--
DP-A2-04	11/28/2005	2	ND	ND	--	--	--	--	--	--	--	--	--	--	--	390	ND	ND	ND	80	ND	70	ND	60	150	ND	120	60	ND	200	240	190
DP-A2-05	11/28/2005	4	ND	ND	--	--	--	--	--	--	--	--	--	--	--	--	--	--	--	--	--	--	--	--	--	--	--	--	--	--	--	--
DP-A2-05	11/28/2005	2	ND	ND	--	--	--	--	--	--	--	--	--	--	--	310	ND	ND	ND	ND	ND	ND	ND	ND	60	ND	ND	ND	ND	140	160	50
DP-A2-06	11/28/2005	2	ND	ND	--	--	--	--	--	--	--	--	--	--	--	--	--	--	--	--	--	--	--	--	--	--	--	--	--	--	--	--
DP-A2-07	11/28/2005	2	ND	ND	--	--	--	--	--	--	--	--	--	--	--	--	--	--	--	--	--	--	--	--	--	--	--	--	--	--	--	--
DP-A2-08	11/28/2005	2	ND	ND	--	--	--	--	--	--	--	--	--	--	--	--	--	--	--	--	--	--	--	--	--	--	--	--	--	--	--	--
DP-A2-09	11/28/2005	2	--	--	--	--	--	--	--	--	--	--	--	3.22	--	--	--	--	--	--	--	--	--	--	--	--	--	--	--	--	--	--
DP-A2-09	11/28/2005	6	--	--	--	--	--	--	--	--	--	--	--	2.06	--	--	--	--	--	--	--	--	--	--	--	--	--	--	--	--	--	--
DP-A2-10	11/28/2005	2	--	--	--	--	--	--	--	--	--	--	--	10.6	--	--	--	--	--	--	--	--	--	--	--	--	--	--	--	--	--	--
DP-A2-10	11/28/2005	6	--	--	--	--	--	--	--	--	--	--	--	2.11	--	--	--	--	--	--	--	--	--	--	--	--	--	--	--	--	--	--
DP-A2-11	11/28/2005	2	--	--	--	--	--	--	--	--	--	--	--	8.21	--	--	--	--	--	--	--	--	--	--	--	--	--	--	--	--	--	--
DP-A2-11	11/28/2005	6	--	--	--	--	--	--	--	--	--	--	--	2.76	--	--	--	--	--	--	--	--	--	--	--	--	--	--	--	--	--	--

Notes
1. Data qualifiers are as follows:
   ND = Analyte not detected.
   -- = Not analyzed.
   NE = Screening level not established.

Abbreviations
µg/kg = micrograms per kilogram
JSCS = Joint Source Control Strategy
mg/kg = milligrams per kilogram

TABLE 5

AREAS 3A AND 3B HISTORICAL DATA [1]
University of Portland River Campus Property
Portland, Oregon

Sample ID/ Location	Date	Depth (feet)	Aroclor 1016	Aroclor 1221	Aroclor 1232	Aroclor 1242	Aroclor 1248	Aroclor 1254	Aroclor 1260	Total PCBs
			(µg/kg)							
JSCS Screening Level			**530**	--	--	--	**1500**	**300**	**200**	**0.39**
EPA Regional Screening Level (RSL)		**Residential**	**3,900**	**170**	**170**	**220**	**220**	**220**	**220**	--
		Industrial	**21,000**	**620**	**620**	**740**	**740**	**740**	**740**	--
Area 3A MIS A	10/2006	0-1	ND	ND	ND	ND	ND	36 J	130 J	166
Area 3A MIS B	10/2006	1-5	ND	ND	ND	ND	ND	ND	ND	ND
Area 3A MIS C	10/2006	5-10	ND	ND	ND	ND	ND	ND	ND	ND
Area 3B MIS A	10/2006	0-1	ND	ND	ND	ND	3.9	150	490	643.9
Area 3B MIS B	10/2006	1-5	ND	ND	ND	ND	ND	ND	ND	ND
Area 3B MIS C	10/2006	5-10	ND	ND	ND	ND	ND	ND	ND	ND

Note
1. Data qualifier is as follows:
   ND = analyte not detected.
   J = estimated.

Abbreviation
µg/kg = micrograms per kilogram

TABLE 6

AREAS 5A AND RS-2 HISTORICAL DATA[1]
University of Portland River Campus Property
Portland, Oregon

Location	Date	Depth (feet)	Arsenic	Lead	Aroclor 1016	Aroclor 1221	Aroclor 1232	Aroclor 1242	Aroclor 1248	Aroclor 1254	Aroclor 1260	Total PCBs	2-Chloronaphthalene	2-Methylnaphthalene	Acenaphthene	Acenaphthylene	Anthracene	Benzo(a)anthracene	Benzo(a)pyrene	Benzo(b)fluoranthene	Benzo(g,h,i)perylene	Benzo(k)fluoranthene	Chrysene	Dibenz(a,h)anthracene	Fluoranthene	Fluorene	Indeno(1,2,3-cd)pyrene	Naphthalene	Phenanthrene	Pyrene	TPH-Diesel	TPH-Motor Oil	TPH-Gasoline
			mg/kg		µg/kg																										mg/kg		
JSCS Screening Level			**7**	**17**	**530**	**--**	**--**	**--**	**1500**	**300**	**200**	**0.39**	**NE**	**200**	**300**	**200**	**845**	**1,050**	**1,450**	**NE**	**300**	**13,000**	**1,290**	**1,300**	**2,230**	**300**	**100**	**561**	**1,170**	**1,520**	**500**		
EPA Regional Screening Level (RSL)		**Residential**	**0.39**	**400**	**3,900**	**170**	**170**	**220**	**220**	**220**	**220**	**--**	**6.3E+06**	**NE**	**3.4E+06**	**NE**	**1.7E+07**	**150**	**15**	**150**	**NE**	**1.5E+03**	**1.5E+04**	**NE**	**2.3E+06**	**2.3E+06**	**150**	**3,900**	**NE**	**1.7E+06**	**--**	**--**	**--**
		Industrial	**1.6**	**800**	**21,000**	**620**	**620**	**740**	**740**	**740**	**740**	**--**	**8.2E+07**	**NE**	**3.3E+07**	**NE**	**1.7E+08**	**2,100**	**210**	**2,100**	**NE**	**2.1E+04**	**2.1E+05**	**NE**	**2.2E+07**	**2.2E+07**	**2,100**	**20,000**	**NE**	**1.7E+07**	**--**	**--**	**--**
Area 5A MIS A	10/2006	0-1	2	52								ND	--	--	ND	ND	ND	ND	ND	ND	ND	ND	ND	ND	64	ND	ND	ND	ND	ND	84	340	--
Area 5A MIS B	10/2006	1-5	2.4	32								ND	--	--	ND	ND	ND	ND	ND	ND	ND	ND	ND	ND	ND	ND	ND	ND	ND	ND	110	390	--
Area 5A MIS C	10/2006	5-10	2	24								ND	--	--	ND	ND	ND	ND	ND	ND	ND	ND	ND	ND	ND	ND	ND	ND	ND	ND	26	96	--
Area RS-2 MIS A	10/2006	0-1	2.2	33								192	--	--	ND	ND	ND	33	49	ND	51	48	47	ND	48	ND	ND	ND	ND	59	57	260	--
Area RS-2 MIS B	10/2006	1-5	2.3	13								ND	--	--	ND	ND	ND	ND	ND	ND	ND	ND	ND	ND	ND	ND	ND	ND	ND	ND	30	110	--
Area RS-2 MIS C	10/2006	5-10	2.4	10								ND	--	--	ND	ND	ND	ND	ND	ND	ND	ND	32	ND	33	ND	ND	ND	ND	40	42	280	--
GP-153	8/10/2000	5	--	--	--	--	--	--	--	--	--	--	ND	ND	ND	0.5	ND	0.9	1	1.3		1	ND	ND	3.8	ND	ND	ND	1	3.4	--	--	--
GP-154	8/10/2000	5	--	--	--	--	--	--	--	--	--	--	ND	ND	ND	ND	ND	ND	ND	ND	ND	ND	ND	ND	ND	ND	ND	ND	ND	ND	--	--	--
GP-154	8/10/2000	9	--	--	--	--	--	--	--	--	--	--	ND	ND	ND	ND	ND	ND	ND	ND	ND	ND	ND	ND	ND	ND	ND	ND	ND	ND	--	--	--
GP-155	8/10/2000	5	--	--	--	--	--	--	--	--	--	--	ND	ND	ND	ND	ND	ND	ND	ND	ND	ND	ND	ND	ND	ND	ND	ND	ND	ND	--	--	--
GP-155	8/10/2000	8.7	--	--	--	--	--	--	--	--	--	--	ND	ND	ND	ND	ND	ND	ND	ND	ND	ND	ND	ND	ND	ND	ND	ND	ND	ND	--	--	--
GP-156	8/10/2000	5	--	--	--	--	--	--	--	--	--	--	ND	ND	ND	ND	ND	ND	ND	ND	ND	ND	ND	ND	ND	ND	ND	ND	ND	ND	--	--	--
GP-156	8/10/2000	10	--	--	--	--	--	--	--	--	--	--	ND	160	100	120	100	60	120	69	110	45	64	ND	390	95	100	660	560	340	--	--	--
GP-158	8/9/2000	1	--	--	ND	ND	ND	ND	ND	170	ND	170	--	--	--	--	--	--	--	--	--	--	--	--	--	--	--	--	--	--	92	240	--
GP-158	8/9/2000	4.5	--	--	--	--	--	--	--	--	--	--	--	--	--	--	--	--	--	--	--	--	--	--	--	--	--	--	--	--	46	80	--
GP-158	8/9/2000	8.3	--	--	--	--	--	--	--	--	--	--	--	--	--	--	--	--	--	--	--	--	--	--	--	--	--	--	--	--	45	200	--
GP-160	8/9/2000	0.5	--	--	ND	ND	ND	ND	ND	1300	ND	1,300	--	--	--	--	--	--	--	--	--	--	--	--	--	--	--	--	--	--	230	660	--
GP-160	8/9/2000	3.5	--	--	--	--	--	--	--	--	--	--	--	--	--	--	--	--	--	--	--	--	--	--	--	--	--	--	--	--	ND	ND	--
GP-160	8/9/2000	6	--	--	--	--	--	--	--	--	--	--	--	--	--	--	--	--	--	--	--	--	--	--	--	--	--	--	--	--	ND	ND	--
GP-82	6/11/1999	0.5	--	--	--	--	--	--	--	--	--	--	ND	2	ND	5.9	2.2	2.7	7	9.4	8.7	2.7	4	ND	4.3	ND	6.8	3.1	2.5	4.9	24	ND	ND
GP-82	6/11/1999	5	--	--	--	--	--	--	--	--	--	--	68	2,100	380	14,000	12,000	36,000	75,000	65,000	38,000	26,000	43,000	6,800	79,000	6,700	30,000	9,400	51,000	120,000	45	81	ND
GP-83	6/11/1999	0.5	--	--	--	--	--	--	--	--	--	--	ND	ND	ND	2.3	1.3	2.9	ND	ND	ND	ND	2.5	ND	4.8	0.64	ND	1	6.2	6.8	39	91	ND
GP-83	6/11/1999	4	--	--	--	--	--	--	--	--	--	--	ND	0.71	ND	4.9	2.7	22	46	35	29	11	25	ND	34	0.71	28	4.3	10	48	25	ND	ND
GP-84	6/11/1999	0.5	--	--	--	--	--	--	--	--	--	--	ND	ND	ND	0.72	0.77	2.2	5.2	6	ND	2.6	4.2	ND	5.1	ND	3.5	0.43	2.7	5	ND	ND	ND
GP-84	6/11/1999	4	--	--	--	--	--	--	--	--	--	--	ND	ND	ND	ND	ND	ND	ND	ND	ND	ND	ND	ND	ND	ND	ND	ND	ND	ND	ND	ND	ND
GP-86	6/11/1999	0.5	2.9	--	ND	ND	ND	ND	ND	ND	ND	ND	ND	ND	ND	12	8.3	ND	ND	ND	ND	ND	ND	ND	20	ND	ND	ND	15	22	180	820	ND
GP-86	6/11/1999	5	2	--	ND	ND	ND	ND	ND	ND	ND	ND	ND	ND	ND	0.67	1.5	4.4	5.9	5.1	1.8	2.7	3.7	ND	6.1	ND	2.2	0.57	2.9	6	21	ND	ND
GP-86	6/11/1999	10	1.9	--	ND	ND	ND	ND	ND	ND	ND	ND	--	--	--	--	--	--	--	--	--	--	--	--	--	--	--	--	--	--	--	--	--
GP-88	6/2/1999	0.5	0.9	--	ND	ND	ND	ND	ND	360	ND	360	ND	ND	ND	ND	ND	ND	ND	ND	ND	ND	ND	ND	ND	ND	ND	ND	ND	ND	79	ND	150
GP-88	6/2/1999	5	2.4	--	ND	ND	ND	ND	ND	ND	ND	ND	ND	ND	ND	ND	ND	ND	ND	ND	ND	ND	ND	ND	ND	ND	ND	ND	ND	ND	25	ND	ND
GP-88	6/2/1999	12	15	--	ND	ND	ND	ND	ND	ND	ND	ND	--	--	--	--	--	--	--	--	--	--	--	--	--	--	--	--	--	--	--	--	--
GP-90	6/3/1999	0.5	--	--	--	--	--	--	--	--	--	--	ND	ND	ND	6.9	13	13	24	32	22	10	14	ND	20	ND	15	4.8	21	22	ND	ND	ND
GP-90	6/3/1999	5	--	--	--	--	--	--	--	--	--	--	ND	ND	ND	ND	ND	ND	ND	ND	ND	ND	5.9	ND	ND	ND	ND	ND	ND	ND	ND	ND	ND
SB-14	1993	10	2	--	--	--	--	--	--	--	--	--	ND	ND	ND	ND	10	40	110	110	100	50	60	--	170	ND	100	--	170	180	--	--	--
PP-A5-36	11/30/2005	4	--	--	--	--	--	--	--	--	--	--	--	--	ND	ND	ND	159	204.5	159	113.6	125	170	ND	261	ND	136	ND	ND	329.5	--	--	--
DP-A5-36	11/30/2005	8	--	--	--	--	--	--	--	--	--	--	--	ND	ND	ND	ND	92	52.6	52.6	52.6	65.79	157.89	ND	130	ND	ND	ND	ND	170	--	--	--
DP-A5-37	11/30/2005	4	--	--	--	--	--	--	--	--	--	--	--	ND	ND	ND	ND	ND	ND	ND	ND	ND	ND	ND	ND	ND	ND	ND	ND	65.9	--	--	--
DP-A5-37	11/30/2005	8	--	--	--	--	--	--	--	--	--	--	--	5,036.50	1,158.50	61,000	39,630	390,000	610,000	490,000	420,000	280,000	400,000	65,500	920,000	4,597	490,000	40,000	94,000	1,200,000	--	--	--
DP-A5-37	11/30/2005	11.5	--	--	--	--	--	--	--	--	--	--	--	ND	ND	ND	ND	253	260	140	230	210	428.57	ND	837	ND	164.8	ND	ND	1,110	--	--	--
DP-A5-38	11/30/2005	4	--	--	--	--	--	--	--	--	--	--	--	ND	ND	ND	ND	103	110	57.47	103	103	126	ND	229	ND	103	ND	ND	275.86	--	--	--
DP-A5-38	11/30/2005	8	--	--	--	--	--	--	--	--	--	--	--	ND	ND	ND	ND	ND	ND	ND	ND	ND	ND	ND	ND	ND	ND	ND	ND	ND	--	--	--
DP-A5-41	11/30/2005	1	--	--	ND	ND	ND	ND	ND	ND	ND	ND	--	--	--	--	--	--	--	--	--	--	--	--	--	--	--	--	--	--	--	--	--
DP-A5-41	11/30/2005	3	--	--	ND	ND	ND	ND	ND	ND	ND	ND	--	--	--	--	--	--	--	--	--	--	--	--	--	--	--	--	--	--	ND	ND	ND
DP-A5-42	11/30/2005	1	--	--	ND	ND	ND	ND	ND	ND	ND	ND	--	--	--	--	--	--	--	--	--	--	--	--	--	--	--	--	--	--	--	--	--
DP-A5-42	11/30/2005	3	--	--	ND	ND	ND	ND	ND	ND	ND	ND	--	--	--	--	--	--	--	--	--	--	--	--	--	--	--	--	--	--	ND	ND	ND

TABLE 6

AREAS 5A AND RS-2 HISTORICAL DATA[1]
University of Portland River Campus Property
Portland, Oregon

Location	Date	Depth (feet)	Arsenic	Lead	Aroclor 1016	Aroclor 1221	Aroclor 1232	Aroclor 1242	Aroclor 1248	Aroclor 1254	Aroclor 1260	Total PCBs	2-Chloronaphthalene	2-Methylnaphthalene	Acenaphthene	Acenaphthylene	Anthracene	Benzo(a)anthracene	Benzo(a)pyrene	Benzo(b)fluoranthene	Benzo(g,h,i)perylene	Benzo(k)fluoranthene	Chrysene	Dibenz(a,h)anthracene	Fluoranthene	Fluorene	Indeno(1,2,3-cd)pyrene	Naphthalene	Phenanthrene	Pyrene	TPH-Diesel	TPH-Motor Oil	TPH-Gasoline
			mg/kg		µg/kg																										mg/kg		
JSCS Screening Level			**7**	**17**	**530**	**--**	**--**	**--**	**1500**	**300**	**200**	**0.39**	**NE**	**200**	**300**	**200**	**845**	**1,050**	**1,450**	**NE**	**300**	**13,000**	**1,290**	**1,300**	**2,230**	**300**	**100**	**561**	**1,170**	**1,520**	**500**		
EPA Regional Screening Level (RSL)		**Residential**	**0.39**	**400**	**3,900**	**170**	**170**	**220**	**220**	**220**	**220**	**--**	**6.3E+06**	**NE**	**3.4E+06**	**NE**	**1.7E+07**	**150**	**15**	**150**	**NE**	**1.5E+03**	**1.5E+04**	**NE**	**2.3E+06**	**2.3E+06**	**150**	**3,900**	**NE**	**1.7E+06**	**--**	**--**	**--**
		Industrial	**1.6**	**800**	**21,000**	**620**	**620**	**740**	**740**	**740**	**740**	**--**	**8.2E+07**	**NE**	**3.3E+07**	**NE**	**1.7E+08**	**2,100**	**210**	**2,100**	**NE**	**2.1E+04**	**2.1E+05**	**NE**	**2.2E+07**	**2.2E+07**	**2,100**	**20,000**	**NE**	**1.7E+07**	**--**	**--**	**--**
DP-A5-43	11/30/2005	1	--	--	ND	ND	ND	ND	ND	ND	ND	ND	--	--	--	--	--	--	--	--	--	--	--	--	--	--	--	--	--	--	--	--	--
DP-A5-43	11/30/2005	3	--	--	ND	ND	ND	ND	ND	ND	ND	ND	--	--	--	--	--	--	--	--	--	--	--	--	--	--	--	--	--	--	ND	ND	--
DP-A5-44	11/30/2005	1	--	--	ND	ND	ND	ND	ND	ND	ND	ND	--	--	--	--	--	--	--	--	--	--	--	--	--	--	--	--	--	--	--	--	--
DP-A5-44	11/30/2005	3	--	--	ND	ND	ND	ND	ND	ND	ND	ND	--	--	--	--	--	--	--	--	--	--	--	--	--	--	--	--	--	--	ND	ND	ND
DP-A5-45	11/30/2005	12	1.51	--	--	--	--	--	--	--	--	--	--	--	--	--	--	--	--	--	--	--	--	--	--	--	--	--	--	--	--	--	--
DP-A5-45	11/30/2005	14	2.61	--	--	--	--	--	--	--	--	--	--	--	--	--	--	--	--	--	--	--	--	--	--	--	--	--	--	--	--	--	--
DP-A5-46	11/30/2005	12	3.41	--	--	--	--	--	--	--	--	--	--	--	--	--	--	--	--	--	--	--	--	--	--	--	--	--	--	--	--	--	--
DP-A5-46	11/30/2005	15	3.3	--	--	--	--	--	--	--	--	--	--	--	--	--	--	--	--	--	--	--	--	--	--	--	--	--	--	--	--	--	--
DP-A5-47	11/30/2005	12	1.78	--	--	--	--	--	--	--	--	--	--	--	--	--	--	--	--	--	--	--	--	--	--	--	--	--	--	--	--	--	--
DP-A5-47	11/30/2005	14	27.8	--	--	--	--	--	--	--	--	--	--	--	--	--	--	--	--	--	--	--	--	--	--	--	--	--	--	--	--	--	--
DP-A5-48	12/1/2005	0.5	--	--	ND	ND	ND	ND	ND	ND	ND	ND	--	--	--	--	--	--	--	--	--	--	--	--	--	--	--	--	--	--	--	--	--
DP-A5-49	12/1/2005	0.5	--	--	ND	ND	ND	ND	ND	ND	ND	ND	--	--	--	--	--	--	--	--	--	--	--	--	--	--	--	--	--	--	--	--	--
GP-162	8/7/2000	0.5	--	--	ND	ND	ND	ND	ND	ND	ND	ND	--	--	--	--	--	--	--	--	--	--	--	--	--	--	--	--	--	--	--	--	--
GP-161	8/7/2000	0.5	--	--	ND	ND	ND	ND	ND	700	ND	700	--	--	--	--	--	--	--	--	--	--	--	--	--	--	--	--	--	--	--	--	--
GP-89	6/3/1999	0.5	1.5	--	ND	ND	ND	ND	ND	440	ND	440	ND	ND	ND	ND	ND	ND	ND	ND	ND	ND	ND	ND	ND	ND	ND	ND	ND	ND	6,400	860	ND
GP-89	6/3/1999	5	1.8	--	ND	ND	ND	ND	ND	ND	ND	ND	ND	ND	ND	ND	ND	ND	ND	ND	ND	ND	ND	ND	ND	ND	ND	ND	ND	ND	36	ND	ND
GP-89	6/3/1999	15	1.6	--	ND	ND	ND	ND	ND	ND	ND	ND	--	--	--	--	--	--	--	--	--	--	--	--	--	--	--	--	--	--	--	--	--
GP-79	6/2/1999	0.5	2.1	--	ND	ND	ND	300	ND	ND	2100	2400	ND	ND	ND	ND	ND	ND	ND	ND	ND	ND	ND	ND	23	ND	ND	ND	17	22	470	430	ND
GP-79	6/2/1999	2	1.4	--	ND	ND	ND	ND	ND	ND	ND	ND	ND	ND	ND	ND	ND	ND	ND	ND	ND	ND	ND	ND	ND	ND	ND	ND	ND	ND	820	460	ND
GP-79	6/2/1999	4.5	1.5	--	ND	ND	ND	ND	ND	ND	ND	ND	--	--	--	--	--	--	--	--	--	--	--	--	--	--	--	--	--	--	38	76	ND
GP-150	8/9/2000	0.5	--	--	ND	ND	ND	ND	ND	ND	ND	ND	--	--	--	--	--	--	--	--	--	--	--	--	--	--	--	--	--	--	--	--	--
GP-151	8/9/2000	0.5	--	--	ND	ND	ND	ND	ND	200	ND	200	--	--	--	--	--	--	--	--	--	--	--	--	--	--	--	--	--	--	--	--	--
GP-152	8/9/2000	0.5	--	--	ND	ND	ND	ND	ND	ND	120	120	--	--	--	--	--	--	--	--	--	--	--	--	--	--	--	--	--	--	--	--	--

Notes
1. -- = Sample not analyzed for that analyte.
ND = Analyte not detected.
NE = Screening level not established.

Abbreviations
JSCS = Joint Source Control Strategy
µg/kg = micrograms per kilogram
mg/kg = milligrams per kilogram
PCBs = polychlorinated biphenyls
TPH = total petroleum hydrocarbons

TABLE 7

AREA 6C HISTORICAL DATA [1]
University of Portland River Campus Property
Portland, Washington

Location	Date	Depth (feet)	Aroclor 1016	Aroclor 1221	Aroclor 1232	Aroclor 1242	Aroclor 1248	Aroclor 1254	Aroclor 1260	Total PCBs	2-Chloronaphthalene	2-Methylnaphthalene	Acenaphthene	Acenaphthylene	Anthracene	Benzo(a)anthracene	Benzo(a)pyrene	Benzo(b)fluoranthene	Benzo(g,h,i)perylene	Benzo(k)fluoranthene	Chrysene	Dibenz(a,h)anthracene	Fluoranthene	Fluorene	Indeno(1,2,3-cd)pyrene	Naphthalene	Phenanthrene	Pyrene
			µg/kg								µg/kg																	
JSCS Screening Level			**530**	**--**	**--**	**--**	**1500**	**300**	**200**	**0.39**	**NE**	**200**	**300**	**200**	**845**	**1,050**	**1,450**	**NE**	**300**	**13,000**	**1,290**	**1,300**	**2,230**	**300**	**100**	**561**	**1,170**	**1,520**
EPA Regional Screening Level (RSL)		**Residential**	**3,900**	**170**	**170**	**220**	**220**	**220**	**220**	**--**	**6.3E+06**	**NE**	**3.4E+06**	**NE**	**1.7E+07**	**150**	**15**	**150**	**NE**	**1.5E+03**	**1.5E+04**	**NE**	**2.3E+06**	**2.3E+06**	**150**	**3,900**	**NE**	**1.7E+06**
		Industrial	**21,000**	**620**	**620**	**740**	**740**	**740**	**740**	**--**	**8.2E+07**	**NE**	**3.3E+07**	**NE**	**1.7E+08**	**2,100**	**210**	**2,100**	**NE**	**2.1E+04**	**2.1E+05**	**NE**	**2.2E+07**	**2.2E+07**	**2,100**	**20,000**	**NE**	**1.7E+07**
GP-126	6/1/1999	0.5	--	--	--	--	--	--	--	--	--	ND	ND	3.9	5.4	21	16	ND	ND	ND	36	ND	35	ND	ND	ND	7.9	41
GP-126	6/1/1999	5	ND	ND	ND	ND	ND	ND	850	850	--	16	18	11	20	24	52	51	ND	29	32	ND	120	15	22	25	93	73
GP-126	6/1/1999	12	--	--	--	--	--	--	--	--	--	ND	ND	5.2	6.7	20	28	22	20	7.1	14	ND	21	ND	16	5.2	22	28
GP-171	8/8/2000	0.5	ND	ND	ND	ND	ND	ND	190	190	--	ND	ND	ND	ND	22	ND	ND	ND	ND	22	ND	37	ND	ND	ND	20	33
GP-171	8/8/2000	5	ND	ND	ND	ND	ND	ND	150	150	--	51	42	27	29	77	79	88	64	31	90	ND	150	35	79	160	150	170
GP-171	8/8/2000	6.7	--	--	--	--	--	--	--	--	--	55	85	64	42	110	140	170	130	45	130	ND	270	50	140	95	210	470
GP-172	8/8/2000	0.5	--	--	--	--	--	--	--	--	--	250	290	290	670	860	690	730	790	660	1,100	ND	740	570	ND	ND	670	790
GP-172	8/8/2000	5	ND	ND	ND	ND	ND	ND	1300	1300	--	160	120	220	180	440	600	500	470	230	530	790	890	120	530	300	460	1,000
GP-172	8/8/2000	7.3	ND	ND	ND	ND	ND	ND	150	150	--	60	ND	33	ND	73	47	84	40	31	140	ND	220	53	ND	40	320	240
GP-173	8/8/2000	0.5	--	--	--	--	--	--	--	--	--	ND	ND	ND	ND	ND	ND	ND	ND	ND	ND	ND	ND	ND	ND	ND	ND	23
GP-173	8/8/2000	5	--	--	--	--	--	--	--	--	--	ND	420	46	120	73	100	87	79	27	91	ND	200	160	85	25	96	230
GP-173	8/8/2000	7.3	--	--	--	--	--	--	--	--	--	1,200	6,200	880	3,000	3,200	3,500	2,800	2,200	940	3,100	230	9,800	3,600	2,600	610	16,000	11,000
DP-A6-51	12/1/2005	5	ND	ND	ND	ND	ND	ND	ND	ND	--	--	--	--	--	--	--	--	--	--	--	--	--	--	--	--	--	--
DP-A6-51	12/1/2005	8	ND	ND	ND	ND	ND	ND	ND	ND	--	--	--	--	--	--	--	--	--	--	--	--	--	--	--	--	--	--
DP-A6-52	12/1/2005	5	ND	ND	ND	ND	ND	ND	ND	ND	--	--	--	--	--	--	--	--	--	--	--	--	--	--	--	--	--	--
DP-A6-52	12/1/2005	8	ND	ND	ND	ND	ND	ND	ND	ND	ND	ND	ND	ND	ND	ND	ND	ND	ND	ND	ND	ND	56	ND	ND	ND	ND	67.4
DP-A6-52	12/1/2005	12	ND	ND	ND	ND	ND	ND	ND	ND	ND	ND	ND	ND	ND	ND	ND	ND	ND	ND	58.8	ND	105.9	ND	ND	ND	70.6	105.9
DP-A6-53	12/1/2005	5	ND	ND	ND	ND	ND	ND	ND	ND	--	--	--	--	--	--	--	--	--	--	--	--	--	--	--	--	--	--
DP-A6-53	12/1/2005	8	ND	ND	ND	ND	ND	ND	ND	ND	--	--	--	--	--	--	--	--	--	--	--	--	--	--	--	--	--	--

Notes
1. -- = Sample not analyzed for that analyte.
ND = Analyte not detected.
NE = Screening level not established.

Abbreviations
µg/kg = micrograms per kilogram
JSCS = Joint Source Control Strategy
mg/kg = milligrams per kilogram
PCBs = polychlorinated biphenyls

TABLE 8

AREA RS-3 HISTORICAL DATA [1]
University of Portland River Campus Property
Portland, Washington

Location	Date	Depth feet	Aroclor 1016	Aroclor 1221	Aroclor 1232	Aroclor 1242	Aroclor 1248	Aroclor 1254	Aroclor 1260	Total PCBs	2-Chloronaphthalene	2-Methylnaphthalene	Acenaphthene	Acenaphthylene	Anthracene	Benzo(a)anthracene	Benzo(a)pyrene	Benzo(b)fluoranthene	Benzo(g,h,i)perylene	Benzo(k)fluoranthene	Chrysene	Dibenz(a,h)anthracene	Fluoranthene	Fluorene	Indeno(1,2,3-cd)pyrene	Naphthalene	Phenanthrene	Pyrene
			µg/kg																									
JSCS Screening Level			530	--	--	--	1500	300	200	0.39	NE2	200	300	200	845	1,050	1,450	NE2	300	13,000	1,290	1,300	2,230	300	100	561	1,170	1,520
EPA Regional Screening Level (RSL)		Residential	3,900	170	170	220	220	220	220	--	6.3E+06	NE	3.4E+06	NE	1.7E+07	150	15	150	NE	1.5E+03	1.5E+04	NE	2.3E+06	2.3E+06	150	3,900	NE	1.7E+06
		Industrial	21,000	620	620	740	740	740	740	--	8.2E+07	NE	3.3E+07	NE	1.7E+08	2,100	210	2,100	NE	2.1E+04	2.1E+05	NE	2.2E+07	2.2E+07	2,100	20,000	NE	1.7E+07
GP-59	5/28/1999	0.5	ND	ND	ND	ND	ND	ND	ND	ND	ND	ND	ND	ND	ND	ND	ND	ND	ND	ND	4.3	ND	5.2	ND	ND	3.9	6.9	8.3
GP-59	5/28/1999	5	ND	ND	ND	ND	ND	ND	ND	ND	ND	16	36	12	19	70	110	91	83	42	71	ND	170	13	67	45	170	230
GP-59	5/28/1999	14	--	--	--	--	--	--	--	--	ND	93	6.7	12	31	220	490	360	270	58	220	ND	180	11	230	50	130	360
GP-143	8/9/2000	5	--	--	--	--	--	--	--	--	ND	48	97	57	72	370	420	380	300	120	420	ND	790	55	350	110	540	880
GP-143	8/9/2000	12	--	--	--	--	--	--	--	--	ND	ND	ND	ND	ND	ND	ND	ND	ND	ND	ND	ND	ND	ND	ND	ND	ND	ND
GP-147	8/9/2000	1	--	--	--	--	--	--	--	--	ND	ND	ND	ND	ND	ND	ND	ND	ND	ND	ND	ND	ND	ND	ND	ND	ND	ND
GP-147	8/9/2000	3.5	ND	ND	ND	ND	ND	ND	ND	ND	ND	22	ND	22	ND	43	30	41	ND	ND	49	ND	53	ND	ND	53	53	77
GP-144	8/9/2000	4	--	--	--	--	--	--	--	--	ND	ND	ND	22	ND	43	40	74	31	ND	52	ND	86	ND	29	22	87	82
GP-144	8/9/2000	6	--	--	--	--	--	--	--	--	ND	ND	32	ND	ND	43	47	31	ND	ND	45	ND	88	ND	ND	29	81	110
GP-145	8/9/2000	4.5	--	--	--	--	--	--	--	--	ND	19	ND	ND	ND	19	ND	25	ND	19	23	ND	44	ND	ND	21	50	64
GP-145	8/9/2000	11	--	--	--	--	--	--	--	--	ND	ND	ND	ND	ND	ND	ND	ND	ND	ND	ND	ND	ND	ND	ND	ND	ND	ND
DP-A4-23	11/29/2005	4	--	--	--	--	--	--	--	--	ND	ND	ND	ND	ND	ND	ND	ND	ND	ND	ND	ND	ND	ND	ND	ND	ND	70
DP-A4-23	11/29/2005	12	--	--	--	--	--	--	--	--	ND	ND	ND	ND	ND	ND	ND	ND	ND	ND	ND	ND	ND	ND	ND	ND	ND	ND
DP-A4-23	11/29/2005	14.5	--	--	--	--	--	--	--	--	ND	610	ND	ND	ND	270	160	220	140	240	460	ND	510	ND	140	290	510	400
DP-A4-24	11/29/2005	4	--	--	--	--	--	--	--	--	ND	ND	ND	ND	ND	ND	ND	ND	ND	ND	ND	ND	ND	ND	ND	ND	ND	ND
DP-A4-24	11/29/2005	16	--	--	--	--	--	--	--	--	ND	110	ND	ND	ND	ND	50	ND	ND	ND	50	ND	ND	ND	ND	60	110	ND
DP-A4-25	11/29/2005	16	--	--	--	--	--	--	--	--	ND	ND	ND	ND	ND	ND	ND	ND	ND	ND	ND	ND	ND	ND	ND	ND	ND	ND
DP-A4-26	11/29/2005	10	--	--	--	--	--	--	--	--	ND	ND	ND	70	ND	ND	ND	ND	ND	ND	ND	ND	ND	ND	ND	ND	60	ND
DP-A4-26	11/29/2005	16	--	--	--	--	--	--	--	--	ND	ND	ND	ND	ND	ND	ND	ND	ND	ND	ND	ND	ND	ND	ND	ND	ND	60
DP-A4-27	11/30/2005	4	--	--	--	--	--	--	--	--	ND	ND	ND	ND	ND	ND	ND	ND	ND	ND	ND	ND	ND	ND	ND	ND	ND	ND
DP-A4-28	11/30/2005	4	--	--	--	--	--	--	--	--	ND	ND	ND	ND	ND	58	ND	ND	46.5	46.5	127.9	ND	104.7	ND	ND	ND	46.5	151
DP-A4-28	11/30/2005	16	--	--	--	--	--	--	--	--	ND	ND	ND	ND	ND	ND	ND	ND	ND	ND	ND	ND	ND	ND	ND	ND	ND	ND
GP-73	6/2/1999	0.5	ND	ND	ND	ND	ND	ND	ND	ND	ND	50	ND	ND	270	340	160	100	ND	ND	510	ND	280	ND	ND	100	170	1,200
GP-73	6/2/1999	5	ND	ND	ND	720	ND	ND	4300	5020	ND	7.7	6.5	22	24	130	120	120	61	ND	160	28	130	11	49	20	91	200
GP-73	6/2/1999	11.5	ND	ND	ND	ND	ND	ND	ND	ND	ND	ND	ND	ND	ND	ND	ND	ND	ND	ND	ND	ND	13	ND	ND	ND	ND	14
GP-146	8/9/2000	5	ND	ND	ND	ND	ND	ND	ND	ND	--	--	--	--	--	--	--	--	--	--	--	--	--	--	--	--	--	--
GP-149	8/9/2000	0.5	--	--	--	--	--	--	--	--	ND	ND	ND	ND	ND	27	29	40	25	ND	33	ND	65	ND	ND	ND	50	73
GP-149	8/9/2000	4	ND	ND	ND	ND	ND	ND	ND	ND	ND	240	71	ND	ND	110	56	100	40	42	100	ND	140	27	54	820	60	150
GP-148	8/9/2000	0.5	--	--	--	--	--	--	--	--	ND	ND	ND	ND	ND	24	ND	32	ND	ND	32	ND	55	ND	ND	ND	26	46
GP-148	8/9/2000	4	ND	ND	ND	ND	ND	ND	ND	ND	ND	ND	ND	ND	ND	80	61	76	41	39	87	ND	110	ND	52	26	63	120
DP-A4-15	11/29/2005	6	ND	ND	ND	ND	ND	ND	ND	ND	ND	ND	ND	ND	ND	ND	ND	ND	ND	ND	ND	ND	50	ND	ND	ND	ND	50
DP-A4-15	11/29/2005	7	--	--	--	--	--	--	--	--	ND	ND	ND	ND	70	ND	70	130	ND	130	310	ND	470	ND	ND	ND	110	400
DP-A4-16	11/29/2005	6	ND	ND	ND	ND	ND	ND	ND	ND	ND	ND	ND	ND	ND	ND	ND	ND	ND	ND	60	ND	50	ND	ND	ND	ND	50
DP-A4-16	11/29/2005	7.5	--	--	--	--	--	--	--	--	ND	ND	ND	ND	ND	ND	ND	ND	ND	ND	ND	ND	ND	ND	ND	ND	ND	ND
DP-A4-17	11/29/2005	6	--	--	--	--	--	--	--	--	ND	ND	ND	ND	450	940	710	950	310	1,000	2,000	ND	1,300	ND	380	ND	290	1,200
DP-A4-17	11/29/2005	8	--	--	--	--	--	--	--	--	ND	ND	ND	ND	ND	200	110	140	ND	170	370	ND	390	ND	50	ND	130	370

Notes
1. -- = Sample not analyzed for that analyte.
ND = Analyte not detected.
NE = Screening level not established.

Abbreviations
µg/kg = micrograms per kilogram
JSCS = Joint Source Control Strategy
mg/kg = milligrams per kilogram
ND = Analyte not detected.
PCBs = polychlorinated biphenyls

FIGURES

EXPLANATION

- EXISTING MONITORING WELL LOCATION
- PROPERTY LINE
- PARCEL LINE
- FENCE
- GATE
- CHEVRON PETROLEUM PIPELINE
- 2B SAMPLING AREAS

0 100 200
APPROXIMATE SCALE IN FEET

SITE PLAN AND SAMPLING AREAS
University of Portland, River Campus Property
Portland, Oregon

By: APS	Date: 09/02/09	Project No. 13867
AMEC Geomatrix		Figure 1

Plot Date: 09/02/09 - 1:17pm, Plotted by: adam.stenberg
Drawing Path: S:\13867\004_DataGaps-WP\CAD\, Drawing Name: SamplingAreas_UP-RiverCampus_090209.dwg

EXPLANATION

- PROPOSED MIS SOIL SAMPLE LOCATION (APPROXIMATE)
- PROPOSED DISCRETE DIRECT-PUSH SOIL SAMPLE LOCATION
- PROPOSED DISCREET DIRECT-PUSH GROUNDWATER SAMPLING LOCATION
- PROPOSED DISCRETE DIRECT-PUSH SOIL AND GROUNDWATER SAMPLE LOCATION
- EXISTING MONITORING WELL LOCATION
- PROPERTY LINE
- PARCEL LINE
- FENCE
- GATE
- CHEVRON PETROLEUM PIPELINE
- 2A SAMPLING AREAS

0 100 200
APPROXIMATE SCALE IN FEET

PROPOSED SAMPLING LOCATIONS AND MONITORING WELL NETWORK
University of Portland, River Campus Property
Portland, Oregon

By: APS	Date: 09/02/09	Project No. 13867
AMEC Geomatrix		Figure 2

Plot Date: 09/02/09 - 1:25pm, Plotted by: adam.stenberg
Drawing Path: S:\13867\004_DataGaps-WP\CAD\, Drawing Name: SamplingMonitoringNetwork_UP-RiverCampus_090209.dwg

EXPLANATION

- PROPOSED MIS SAMPLE LOCATION (APPROXIMATE)
- PROPOSED DISCREET DIRECT-PUSH SOIL SAMPLE LOCATION
- PROPOSED DISCRETE DIRECT-PUSH GROUNDWATER SAMPLE LOCATION
- PROPOSED DISCRETE DIRECT-PUSH SOIL AND GROUNDWATER SAMPLE LOCATION
- EXISTING GROUNDWATER MONITORING WELL

HISTORICAL SAMPLING LOCATIONS

- PHASE 2 ESA BORING (2005)
- GEOPROBE BORING LOCATION (1999-2000)
- MIS BORING LOCATION (2006)
- WASTE SAMPLE LOCATION (2006)
- TEST PIT LOCATION (1996)

- PROPERTY LINE
- FENCE
- PREVIOUSLY PROPOSED EXCAVATION AREA
- 2A SAMPLING AREAS

NOTES:

1. MIS SAMPLING LOCATIONS WILL BE ESTABLISHED IN THE FIELD USING A SYSTEMATIC RANDOM SAMPLE DESIGN.
2. HISTORICAL SAMPLING LOCATIONS MENTIONED IN THE TEXT ARE SHOWN IN DARK TYPE.

N

0 30 60
APPROXIMATE SCALE IN FEET

AREAS 2A and 2B
University of Portland, River Campus Property
Portland, Oregon

By: APS	Date: 09/02/09	Project No. 13867
AMEC Geomatrix		Figure 3

Plot Date: 09/02/09 - 1:20pm, Plotted by: adam.stenberg
Drawing Path: S:\13867\004_DataGaps-WP\CAD\, Drawing Name: SamplingAreas_UP-RiverCampus_090209.dwg

EXPLANATION

- PROPOSED MIS SAMPLE LOCATION (APPROXIMATE)
- EXISTING GROUNDWATER MONITORING WELL

HISTORICAL SAMPLING LOCATIONS

- GEOPROBE BORING LOCATION (1999-2000)
- ORIGINAL BORING LOCATION
- WASTE SAMPLE LOCATION (2006)
- TEST PIT LOCATION (1996)
- PROPERTY LINE
- FENCE
- 3A SAMPLING AREAS

NOTE:
MIS SAMPLING LOCATIONS WILL BE ESTABLISHED IN THE FIELD USING A SYSTEMATIC RANDOM SAMPLE DESIGN.

0 30 60
APPROXIMATE SCALE IN FEET

AREAS 3A and 3B
University of Portland, River Campus Property
Portland, Oregon

By: APS	Date: 05/14/09	Project No. 13867
AMEC Geomatrix		Figure 4

Plot Date: 05/14/09 - 4:26pm, Plotted by: adam.stenberg
Drawing Path: S:\13867\004_DataGaps-WP\CAD\, Drawing Name: SamplingAreas_UP-RiverCampus_051409.dwg

AREAS 5A, 5B, and RS-2
University of Portland, River Campus Property
Portland, Oregon

By: APS	Date: 05/14/09	Project No. 13867
AMEC Geomatrix		Figure 5

Plot Date: 05/14/09 - 4:29pm, Plotted by: adam.stenberg
Drawing Path: S:\13867\004_DataGaps-WP\CAD\, Drawing Name: SamplingAreas_UP-RiverCampus_051409.dwg

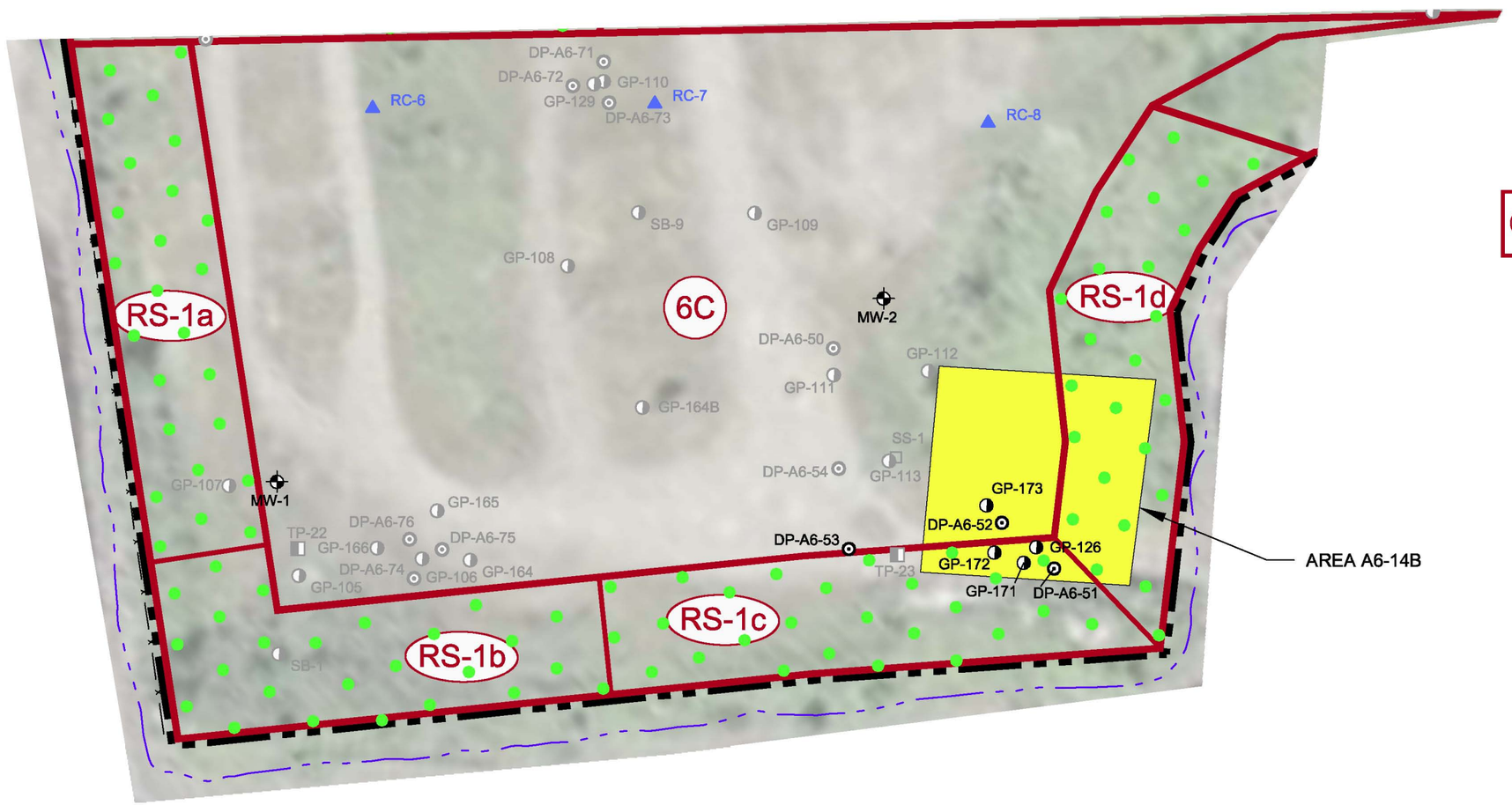

EXPLANATION

- PROPOSED MIS SAMPLE LOCATION (APPROXIMATE)
- PROPOSED DISCRETE DIRECT-PUSH GROUNDWATER SAMPLE LOCATION
- EXISTING GROUNDWATER MONITORING WELL

HISTORICAL SAMPLING LOCATIONS

- PHASE 2 ESA BORING (2005)
- GEOPROBE BORING LOCATION (1999-2000)
- SURFACE SOIL SAMPLE LOCATION
- TEST PIT LOCATION (1996)
- PROPERTY LINE
- FENCE
- PREVIOUSLY PROPOSED EXCAVATION AREA
- RS-1a SAMPLING AREAS

NOTES:

1. MIS SAMPLING LOCATIONS WILL BE ESTABLISHED IN THE FIELD USING A SYSTEMATIC RANDOM SAMPLE DESIGN.
2. HISTORICAL SAMPLING LOCATIONS MENTIONED IN THE TEXT ARE SHOWN IN DARK TYPE.

0 30 60
APPROXIMATE SCALE IN FEET

AREAS RS-1 and 6C
University of Portland, River Campus Property
Portland, Oregon

By: APS	Date: 05/14/09	Project No. 13867
AMEC Geomatrix		Figure 6

Plot Date: 05/14/09 - 4:33pm, Plotted by: adam.sternberg
Drawing Path: S:\13867\004_DataGaps-WP\CAD\, Drawing Name: SamplingAreas_UP-RiverCampus_051409.dwg

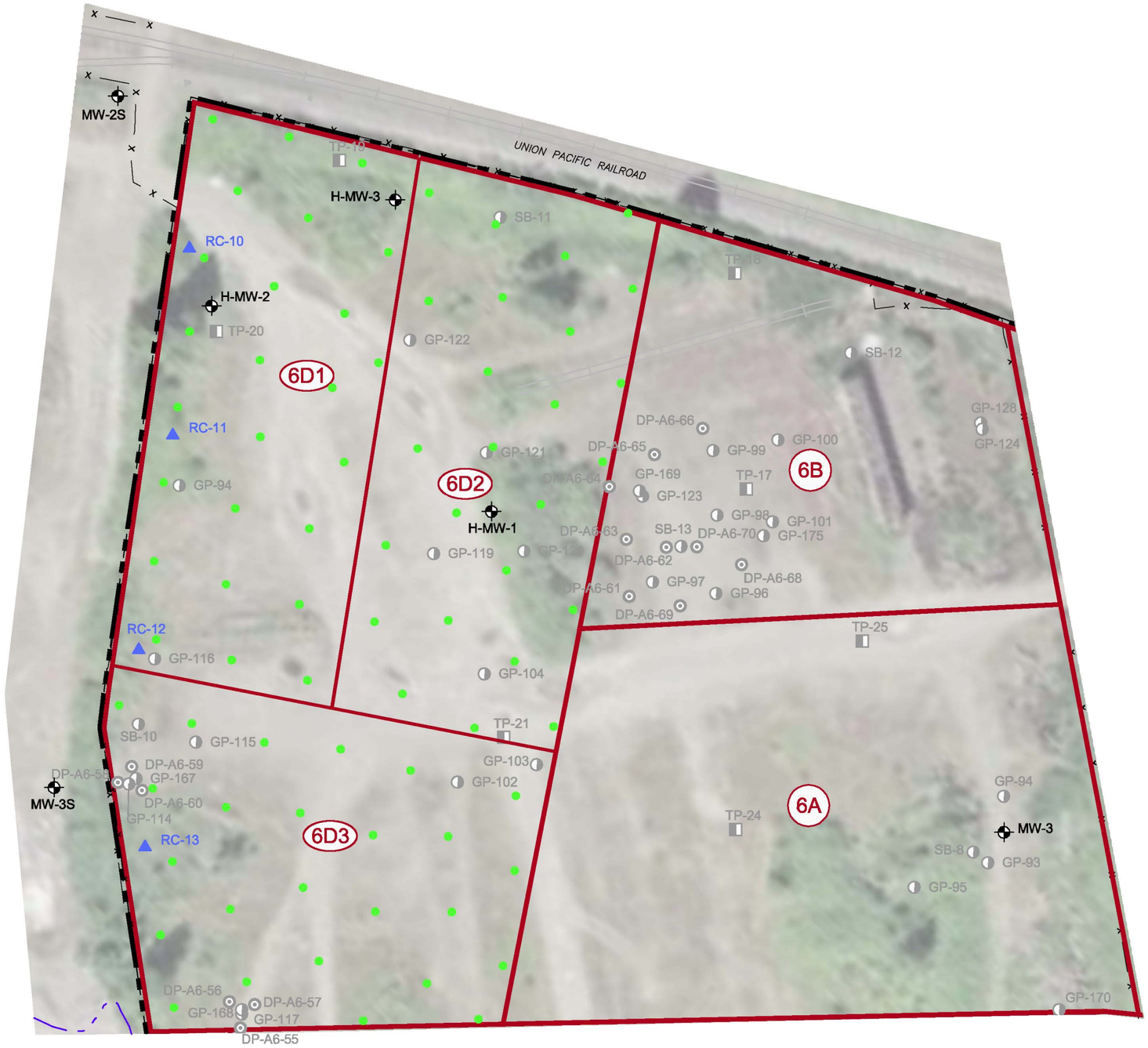

EXPLANATION

- PROPOSED MIS SAMPLE LOCATION (APPROXIMATE)
- PROPOSED DISCRETE DIRECT-PUSH GROUNDWATER SAMPLE LOCATION
- EXISTING GROUNDWATER MONITORING WELL

HISTORICAL SAMPLING LOCATIONS

- PHASE 2 ESA BORING (2005)
- GEOPROBE BORING LOCATION (1999-2000)
- TEST PIT LOCATION (1996)

- PROPERTY LINE
- FENCE
- 6A SAMPLING AREAS

NOTES:
MIS SAMPLING LOCATIONS WILL BE ESTABLISHED IN THE FIELD USING A SYSTEMATIC RANDOM SAMPLE DESIGN.

0 40 80
APPROXIMATE SCALE IN FEET

AREAS 6A, 6B, and 6D
University of Portland, River Campus Property
Portland, Oregon

By: APS	Date: 05/14/09	Project No. 13867
AMEC Geomatrix		Figure 7

Plot Date: 05/14/09 - 4:35pm, Plotted by: adam.stenberg
Drawing Path: S:\13867\004_DataGaps-WP\CAD\, Drawing Name: SamplingAreas_UP-RiverCampus_051409.dwg

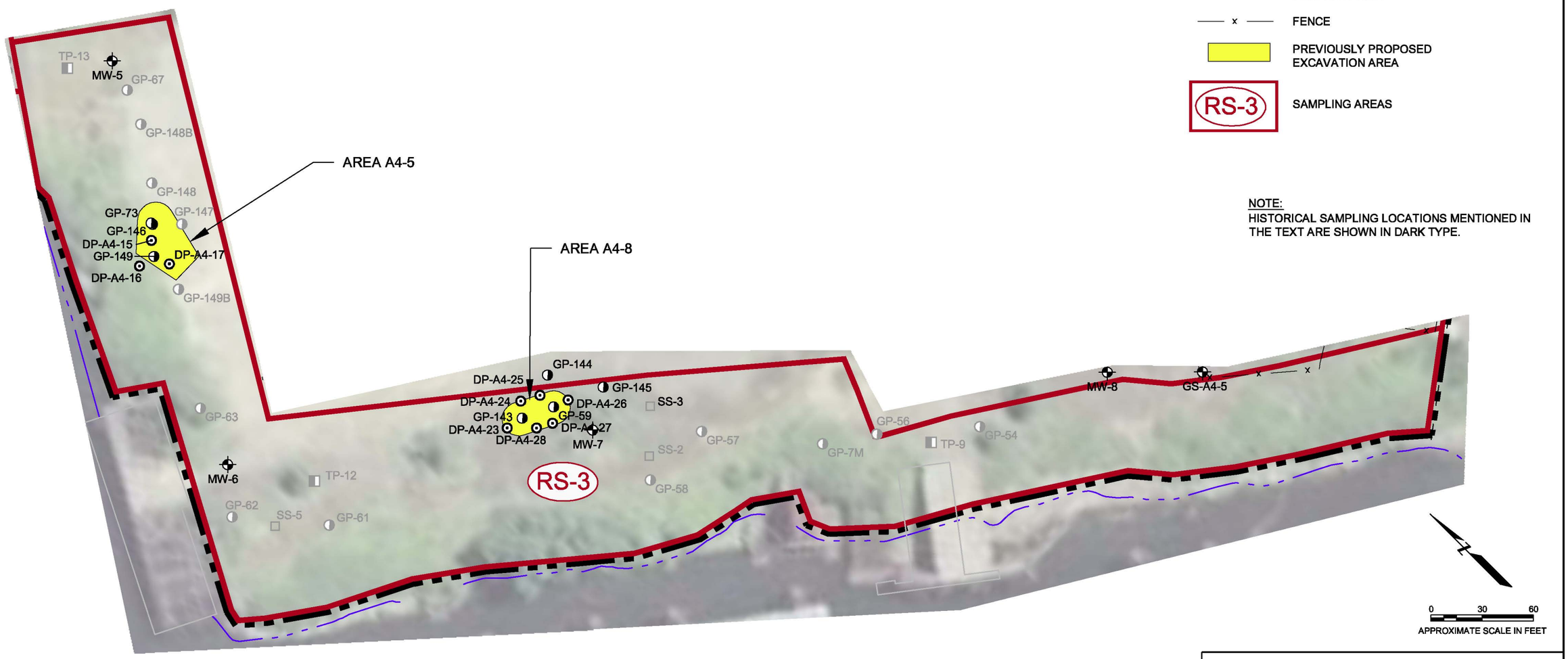

AREA RS-3
University of Portland, River Campus Property
Portland, Oregon

By: APS	Date: 05/15/09	Project No. 13867
AMEC Geomatrix		Figure 8

Plot Date: 05/15/09 - 9:36am, Plotted by: adam.stenberg
Drawing Path: S:\13867\004_DataGaps-WP\CAD\, Drawing Name: SamplingAreas_UP-RiverCampus_051409.dwg

APPENDIX A

Monitoring Well Boring Logs

LOG OF EXPLORATORY BORING

PROJECT NAME Riedel Phase II
LOCATION 5828 N. Van Houten Place
DRILLED BY GeoTech Explorations
DRILL METHOD Hollow Stem Auger
LOGGED BY Joe Sturza

BORING NO. MW- 1
PAGE 1 OF 2
GROUND ELEV. 25.00'
TOTAL DEPTH 31.50'
DATE COMPLETED 09/23/93

SAMPLE NUMBER SAMPLE TYPE	RECOVERY PERCENT (OVA) (ppm)	BLOW COUNTS (IN COMP)	GROUND WATER LEVELS	DEPTH IN FEET	SAMPLES	WELL DETAILS	LITHOLOGIC COLUMN	LITHOLOGIC DESCRIPTION
								0 to 3-inches: ASPHALT
								3-inches to 18-inches: CRUSHED ROCK, 3/4-inch minus. (FILL)
								18-inches to 31.5 feet: SILTY SAND (SW-SM), brown, medium, well graded, 10 percent silt, 5 percent fine subrounded gravel, loose, moist. Hydrocarbon odor.
MW1-5 SS	44 (50)	1-3-6 (9)		5				
MW1-10 SS	66 (8)	5-6-7 (13)		10				@ 10.0 feet: medium to coarse, medium density, trace of organic fibers.
MW1-15 SS	78 (6)	3-6-6 (12)		15				
			▽	20				

REMARKS

(1) Soil samples collected with 2-inch diameter split spoon sampler. (2) OVA: field organic vapor analysis conducted with a flame ionization detector. (3) Reference elevation based on USGS 7.5 minute survey map of PORTLAND, OREGON, 1961 (revised 1970 and 1977). (4) 2-inch diameter schedule 40 PVC well casing with 0.020-inch slot screen.

EMCON Northwest, Inc.

0810-001.01.REID.L49/se·2.11/01/93 REID

MF08894

LOG OF EXPLORATORY BORING

PROJECT NAME Riedel Phase II
LOCATION 5828 N. Van Houten Place
DRILLED BY GeoTech Explorations
DRILL METHOD Hollow Stem Auger
LOGGED BY Joe Sturza

BORING NO. MW- 1
PAGE 2 OF 2
GROUND ELEV. 25.00'
TOTAL DEPTH 31.50'
DATE COMPLETED 09/23/93

SAMPLE NUMBER SAMPLE TYPE	RECOVERY PERCENT (OVA) (ppm)	BLOW COUNTS (N COMP)	GROUND WATER LEVELS	DEPTH IN FEET	SAMPLES	WELL DETAILS	LITHOLOGIC COLUMN	LITHOLOGIC DESCRIPTION
MW1-20 SS	66 (5)	5-7-6 (13)						18-inches to 31.5 feet: SILTY SAND (SW-SM), continued. @ 20.0 feet: gray brown, wet.
MW1-25 SS	89 (70)	4-5-9 (14)		25				
MW1-30 SS	0 (0)	5-6-10 (16)		30				
				35				BORING TERMINATED AT 31.5 FEET.
				40				

WELL COMPLETION DETAILS:
0 to 20.0 feet: 2-inch-diameter, flush-threaded, schedule 40 PVC blank riser pipe.
20.0 to 30.0 feet: 2-inch-diameter, flush-threaded, schedule 40 PVC well screen with 0.010-inch machined slots and a 2-inch-diameter threaded end cap.

0 to 1.5 feet: Concrete.
1.5 to 16.5 feet: Bentonite chips hydrated with potable water.
16.5 to 30.0 feet: 10 - 20 Colorado Silica Sand.

REMARKS

(1) Soil samples collected with 2-inch diameter split spoon sampler. (2) OVA: field organic vapor analysis conducted with a flame ionization detector. (3) Reference elevation based on USGS 7.5 minute survey map of PORTLAND, OREGON, 1961 (revised 1970 and 1977). (4) 2-inch diameter schedule 40 PVC well casing with 0.020-inch slot screen.

EMCON Northwest, Inc.

0810-001 01.REID L49/ee·2.11/01/93...REID

MF08895

LOG OF EXPLORATORY BORING

PROJECT NAME Riedel Phase II
LOCATION 5828 N. Van Houten Place
DRILLED BY GeoTech Explorations
DRILL METHOD Hollow Stem Auger
LOGGED BY Joe Sturza

BORING NO. MW- 2
PAGE 1 OF 2
GROUND ELEV. 25.00'
TOTAL DEPTH 31.50'
DATE COMPLETED 09/23/93

SAMPLE NUMBER SAMPLE TYPE	RECOVERY PERCENT (OVA) (ppm)	BLOW COUNTS (N COMP)	GROUND WATER LEVELS	DEPTH IN FEET	SAMPLES	WELL DETAILS	LITHOLOGIC COLUMN	LITHOLOGIC DESCRIPTION
								0 to 2.0 feet: CRUSHED ROCK, 3/4-inch minus. (FILL)
								2.0 to 5.0 feet: SILTY CLAY (CL), orange brown, low to medium plasticity, micaceous, 10 percent medium sand, moist, trace of organic debris. (FILL)
MW2-5 SS	44 (0)	3-5-6 (11)		5				5.0 to 10.0 feet: SILTY SAND (SM), orange brown, medium, well graded, 20 percent silt, 5 percent fine subrounded gravel, medium density, moist.
MW2-10 SS	44 (3)	6-8-8 (16)		10				10.0 to 27.0 feet: SILTY SAND (SM), brown, medium to coarse, well graded, 10 percent silt, 5 percent fine subrounded gravel, medium density, moist.
MW2-15 SS	66 (0)	6-10-10 (20)		15				
				20				

REMARKS

(1) Soil samples collected with 2-inch diameter split spoon sampler. (2) OVA: field organic vapor analysis conducted with a flame ionization detector. (3) Reference elevation based on USGS 7.5 minute survey map of PORTLAND, OREGON, 1981 (revised 1970 and 1977). (4) 2-inch diameter schedule 40 PVC well casing with 0.020-inch slot screen.

EMCON Northwest, Inc.

0810-001 01 REID L49/sa 2 11/01/93. REID

MF08892

LOG OF EXPLORATORY BORING

PROJECT NAME Riedel Phase II
LOCATION 5828 N. Van Houten Place
DRILLED BY GeoTech Explorations
DRILL METHOD Hollow Stem Auger
LOGGED BY Joe Sturza

BORING NO. MW- 2
PAGE 2 OF 2
GROUND ELEV. 25.00'
TOTAL DEPTH 31.50'
DATE COMPLETED 09/23/93

SAMPLE NUMBER SAMPLE TYPE	RECOVERY PERCENT (OVA) (ppm)	BLOW COUNTS (N COMP)	GROUND WATER LEVELS	DEPTH IN FEET	SAMPLES	WELL DETAILS	LITHOLOGIC COLUMN	LITHOLOGIC DESCRIPTION
MW2-20 SS	78 (3)	13-21-26 (47)						10.0 to 27.0 feet: SILTY SAND (SM), continued. @ 20.0 feet: gray brown. @ 25.0 feet: very dense, moist to wet.
MW2-25 SS	66 (10)	24-34-45 (79)	▽	25				
								27.0 to 31.5 feet: SILTY SAND (SM), gray, coarse, well-graded, 10 percent silt, very dense, wet.
MW2-30 SS	89 (4)	14-25-22 (47)		30				
								BORING TERMINATED AT 31.5 FEET.
				35				
				40				

WELL COMPLETION DETAILS:
0 to 20.00 feet: 2-inch-diameter, flush-threaded, schedule 40 PVC blank riser pipe.
20.0 to 30.0 feet: 2-inch-diameter, flush-threaded, schedule 40 PVC well screen with 0.010-inch machined slots and a 2-inch-diameter threaded end cap.

0 to 1.5 feet: Concrete
1.5 to 16.5 feet: Bentonite chips hydrated with potable water.
16.5 to 30.0 feet: 10 - 20 Colorado Silica Sand.

REMARKS

(1) Soil samples collected with 2-inch diameter split spoon sampler. (2) OVA: field organic vapor analysis conducted with a flame ionization detector. (3) Reference elevation based on USGS 7.5 minute survey map of PORTLAND, OREGON, 1961 (revised 1970 and 1977). (4) 2-inch diameter schedule 40 PVC well casing with 0.020-inch slot screen.

EMCON Northwest, Inc.

0810-001 01 REID L49/ee-2 11/01/93 REID

STATE OF OREGON

MONITORING WELL REPORT

(as required by ORS 537.765 & OAR 690-240-095)

Instructions for completing this report are on the last page of this form.

MULT 4527

1N / 1E / 18 bd

Start Card # 73582

(1) OWNER/PROJECT:

WELL NO. 73582

Name Riedel Properties

Address 6500 N. Van Houghton Court

City Portland State OR Zip 97203

(2) TYPE OF WORK:

- [x] New construction
- [ ] Alteration (Repair/Recondition)
- [ ] Conversion
- [ ] Deepening
- [ ] Abandonment

(3) DRILLING METHOD

- [ ] Rotary Air
- [ ] Rotary Mud
- [ ] Cable
- [x] Hollow Stem Auger
- [ ] Other

(4) BORE HOLE CONSTRUCTION

Yes No

[illegible]ial Standards [ ] [x]

Depth of completed well ~~25~~ 20' ft.

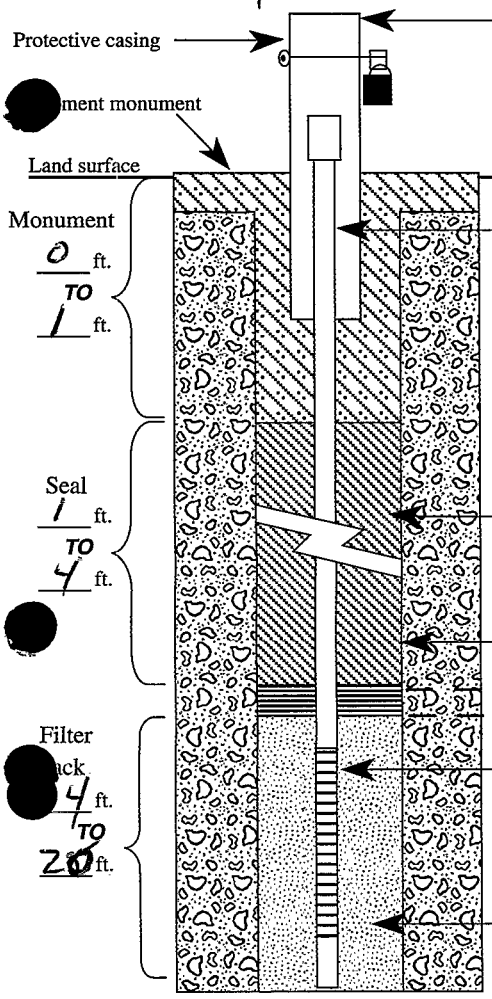

Casing diameter 2" in.

material PVC

Welded [ ] Threaded [ ] Glued [ ]

Liner diameter ____ in.

material ____

Welded [ ] Threaded [ ] Glued [ ]

Well seal: Material Bent chips

Amount 3 x 50# bags

Grout weight ____

Borehole diameter 11 in.

Bentonite plug at least 3 ft. thick

Screen material PVC

interval(s): From 5' To 20

From ____ To ____

Slot size .010 in.

Filter pack: Material Silica

Size #4/20 in.

(5) WELL TEST:

[ ] Pump [ ] Bailer [ ] Air [ ] Flowing Artesian

Permeability ____ Yield ____ GPM

Conductivity ____ PH ____

Temperature of water 50 °F/C Depth artesian flow found ____ ft.

Was water analysis done? [ ] Yes [ ] No

By whom? ____

Depth of strata to be analyzed. From ____ ft. to ____ ft.

Remarks: ____

Name of supervising Geologist/Engineer Amy Amr Geraghty & Miller

(6) LOCATION OF WELL By legal description

Well Location: County Multnomah

Township 1 N (N or S) Range 1 E (E or W) Section 18

1. SE 1/4 of NW 1/4 of above section.

2. Either Street address of well location 6500 N. Van Houghton Court · Portland, OR

or Tax lot number of well location ____

3. ATTACH MAP WITH LOCATION IDENTIFIED. Map shall include approximate scale and north arrow.

(7) STATIC WATER LEVEL:

9 Ft. below land surface. Date 12-29-94

Artesian Pressure ____ lb/sq. in. Date ____

(8) WATER BEARING ZONES:

Depth at which water was first found 9'

From	To	Est. Flow Rate	SWL

(9) WELL LOG:

Ground elevation ____

Material	From	To	SWL
fill: concrete	0		
pipe brown		5	
sand			
brownish	5		
fine sand		10	
fine black	10		
sand		13	
fine sand & wood	17		
chips		20	

RECEIVED MAR - 6 1995 WATER RESOURCES DEPT. SALEM, OREGON

RECEIVED JAN 12 1995 WATER RESOURCES DEPT. SALEM, OREGON

Date started 12-29-94 Completed 12-29-94

(unbonded) Monitor Well Constructor Certification:

I certify that the work I performed on the construction, alteration, or abandonment of this well is in compliance with Oregon well construction standards. Materials used and information reported above are true to the best knowledge and belief.

Signed Rodney L. Brose Date 12-29-94 MWC Number 0329

(bonded) Monitor Well Constructor Certification:

I accept responsibility for the construction, alteration, or abandonment work performed on this well during the construction dates reported above. All work performed during this time is in compliance with Oregon well construction standards. This report is true to the best of my knowledge and belief.

Signed David Grenager Date 12-29-94 MWC Number 1002

ORIGINAL & FIRST COPY-WATER RESOURCES DEPARTMENT SECOND COPY-CONSTRUCTOR THIRD COPY-CUSTOMER

OR4032

RECEIVED
MAR - 6 1995
WATER RESOURCES DEPT.
SALEM, OREGON

RECEIVED
JAN 12 1995
WATER RESOURCES DEPT.
SALEM, OREGON

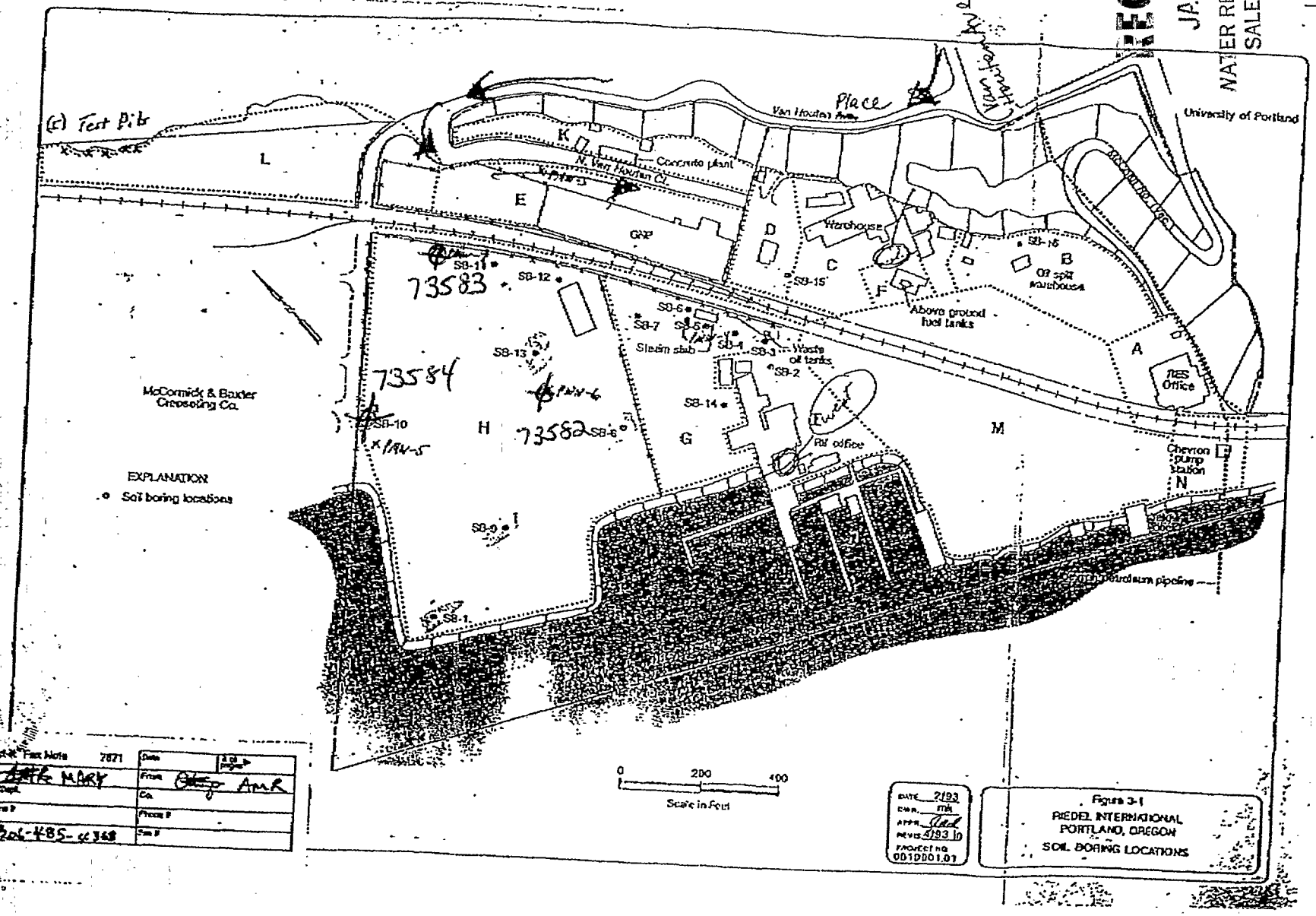

Post-it® Fax Note 7671 Date 3 pages
To Mary From Amr
Co./Dept. Co.
Phone # Phone #
Fax # 206-485-4368 Fax #

STATE OF OREGON

MONITORING WELL REPORT

(as required by ORS 537.765 & OAR 690-240-095)

Instructions for completing this report are on the last page of this form.

MULT 4529

1N / 1E / 18 kd

Start Card # 73584

(1) OWNER/PROJECT:

WELL NO. 73584

Name Riedel Properties

Address 6500 N. Van Houghton Court

City Portland State OR Zip 97203

(2) TYPE OF WORK:

☒ New construction ☐ Alteration (Repair/Recondition)

☐ Conversion ☐ Deepening ☐ Abandonment

(3) DRILLING METHOD

☐ Rotary Air ☐ Rotary Mud ☐ Cable

☒ Hollow Stem Auger ☐ Other

(4) BORE HOLE CONSTRUCTION

Special Standards Yes ☐ No ☒ Depth of completed well 20 ft.

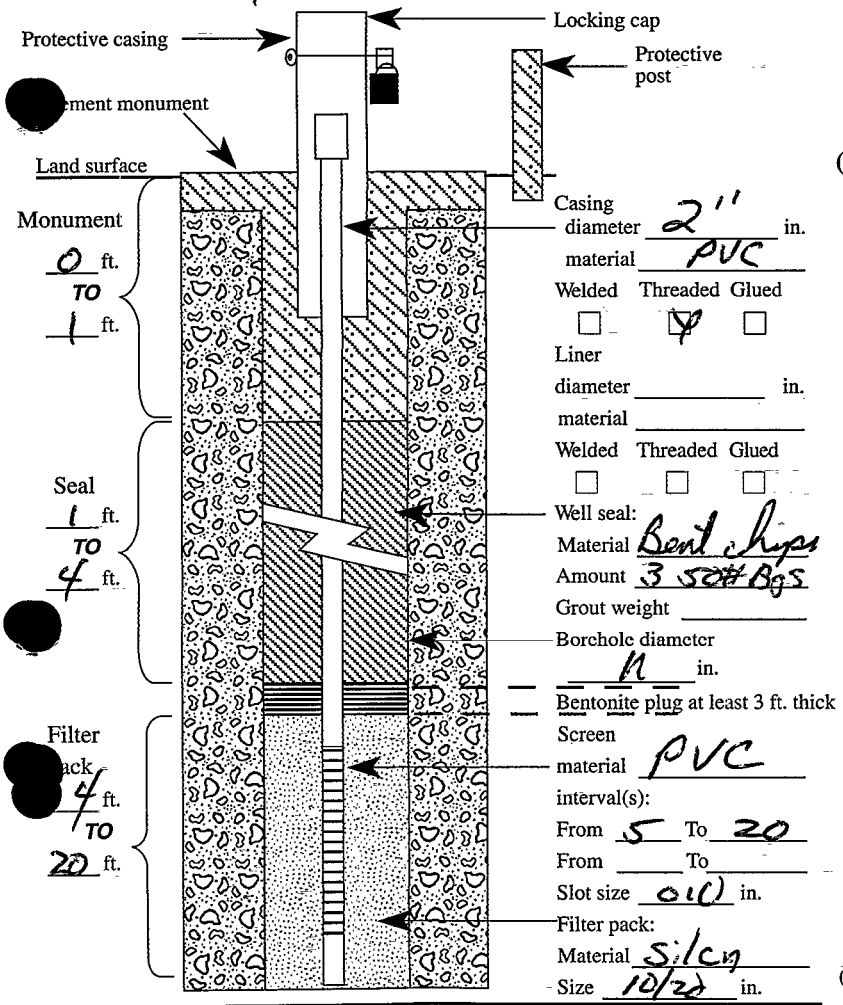

Casing diameter 2" in.

material PVC

Welded ☐ Threaded ☒ Glued ☐

Liner diameter ____ in.

material ____

Welded ☐ Threaded ☐ Glued ☐

Well seal: Material Bent chips

Amount 3 50# Bgs

Grout weight ____

Borehole diameter 11 in.

Bentonite plug at least 3 ft. thick

Screen material PVC

interval(s): From 5 To 20

From ____ To ____

Slot size 010 in.

Filter pack: Material Silica

Size 10/20 in.

(5) WELL TEST:

☐ Pump ☐ Bailer ☐ Air ☐ Flowing Artesian

Permeability ____ Yield ____ GPM

Conductivity ____ PH ____

Temperature of water 50 °F/C Depth artesian flow found ____ ft.

Was water analysis done? ☐ Yes ☐ No

By whom? ____

Depth of strata to be analyzed. From ____ ft. to ____ ft.

Remarks: ____

Name of supervising Geologist/Engineer Amr Amr - Geraghty & Miller

(6) LOCATION OF WELL By legal description

Well Location: County Multnomah

Township 1N (N or S) Range 1E (E or W) Section 18

1. SE 1/4 of NW 1/4 of above section.

2. **Either** Street address of well location 6500 N. Vanhoughton Court - Portland, OR

or Tax lot number of well location ____

3. ATTACH MAP WITH LOCATION IDENTIFIED. Map shall include approximate scale and north arrow.

(7) STATIC WATER LEVEL:

13 Ft. below land surface. Date 12-29-94

Artesian Pressure ____ lb/sq. in. Date ____

(8) WATER BEARING ZONES:

Depth at which water was first found 13

From	To	Est. Flow Rate	SWL

(9) WELL LOG:

Ground elevation ____

Material	From	To	SWL
Black sand fine	0	14	
brown silty clay	14	20	

RECEIVED JAN 12 1995 WATER RESOURCES SALEM, OR

Date started 12-29-94 Completed 12-29-94

(unbonded) Monitor Well Constructor Certification:

I certify that the work I performed on the construction, alteration, or abandonment of this well is in compliance with Oregon well construction standards. Materials used and information reported above are true to the best knowledge and belief.

MWC Number 10329

Signed Rodney L. Burns Date 12-29-94

(bonded) Monitor Well Constructor Certification:

I accept responsibility for the construction, alteration, or abandonment work performed on this well during the construction dates reported above. All work performed during this time is in compliance with Oregon well construction standards. This report is true to the best of my knowledge and belief.

MWC Number 10024

Signed Bruce Hermesser Date 12-29-94

ORIGINAL & FIRST COPY-WATER RESOURCES DEPARTMENT SECOND COPY-CONSTRUCTOR THIRD COPY-CUSTOMER

OR 4032

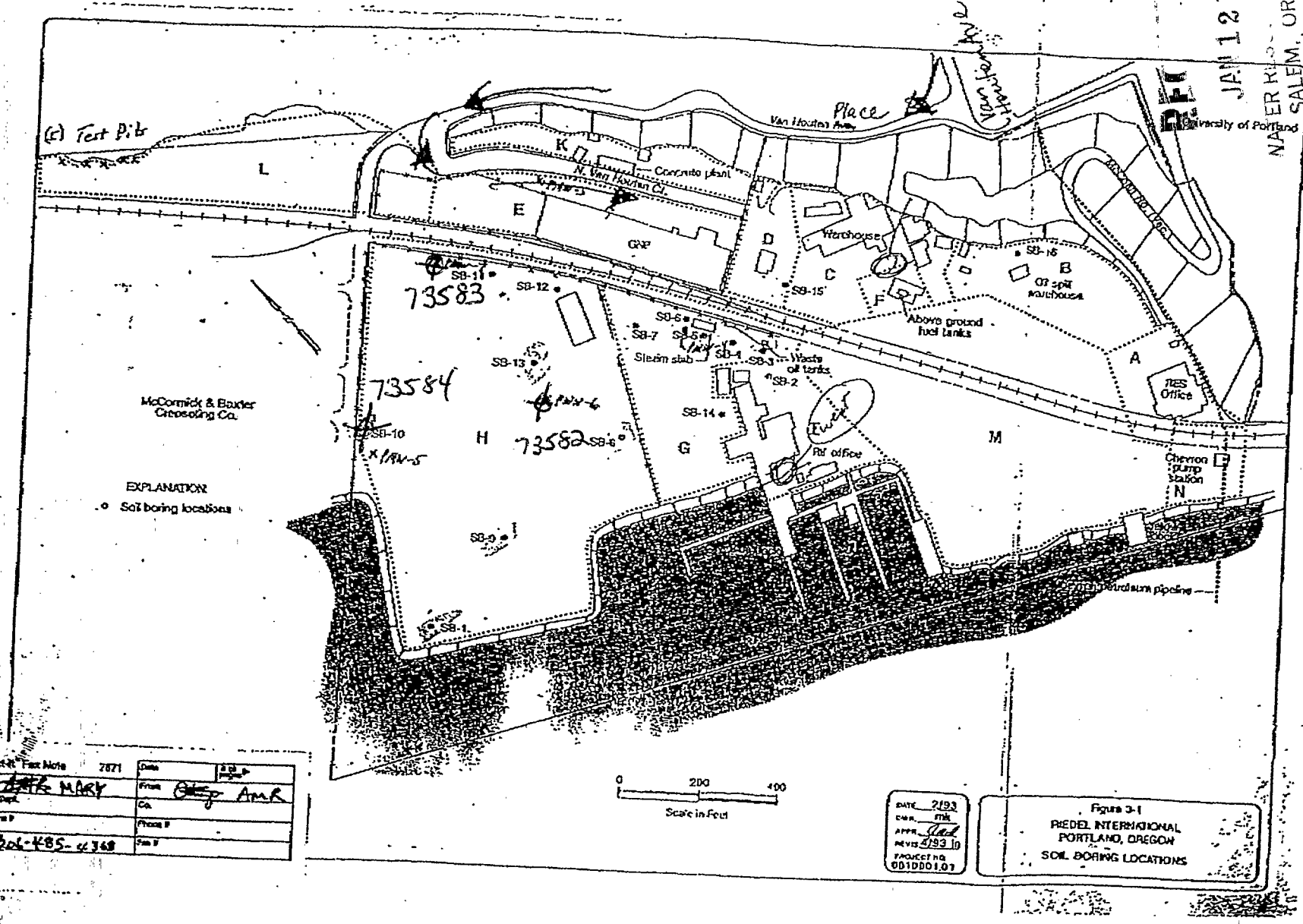

Post-it® Fax Note 7671 | Date 2-10-95 | # of pages ▶ 1
To: Mary | From: Amr
Co./Dept. | Co.
Phone # | Phone #
Fax # 206-485-0368 | Fax #

JAN 12 1995
NAPER RE...
SALEM, OREGON

TOTAL P.08

STATE OF OREGON

MONITORING WELL REPORT

(as required by ORS 537.765 & OAR 690-240-095)

Instructions for completing this report are on the last page of this form.

MULT 4528

1N / 1E / 18 bcd

Start Card # 73583

(1) OWNER/PROJECT:

WELL NO. 73583

Name Riedel Properties

Address 6500 N. Van Houghton Court

City Portland State OR Zip 97203

(2) TYPE OF WORK:

[X] New construction [ ] Alteration (Repair/Recondition)

[ ] Conversion [ ] Deepening [ ] Abandonment

(3) DRILLING METHOD

[ ] Rotary Air [ ] Rotary Mud [ ] Cable

[X] Hollow Stem Auger [ ] Other

(4) BORE HOLE CONSTRUCTION

Yes No

[illegible]ial Standards [ ] [X]

Depth of completed well 15' ft.

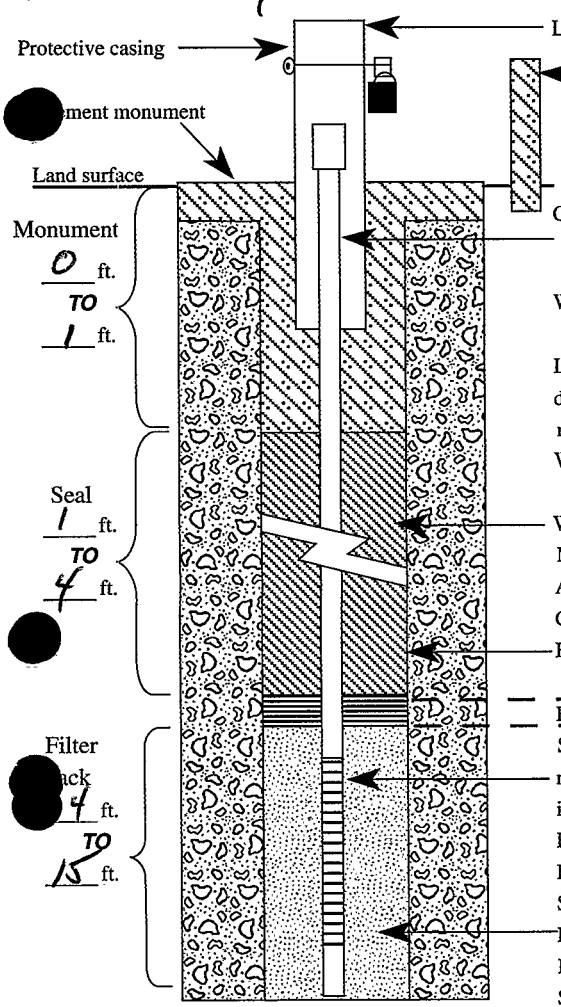

Casing diameter 2" in.

material PVC

Welded Threaded Glued

[ ] [X] [ ]

Liner diameter ____ in.

material ____

Welded Threaded Glued

[ ] [ ] [ ]

Well seal:

Material Bent. Chip

Amount 3-50# Bgs

Grout weight ____

Borehole diameter 11 in.

Bentonite plug at least 3 ft. thick

Screen material PVC

interval(s):

From 5 To 15

From ____ To ____

Slot size 010 in.

Filter pack:

Material S. ICA

Size 10/20 in.

(5) WELL TEST:

[ ] Pump [ ] Bailer [ ] Air [ ] Flowing Artesian

Permeability ____ Yield ____ GPM

Conductivity ____ PH ____

Temperature of water 50 °F/C Depth artesian flow found ____ ft.

Was water analysis done? [ ] Yes [ ] No

By whom? ____

Depth of strata to be analyzed. From ____ ft. to ____ ft.

Remarks: ____

Name of supervising Geologist/Engineer Geraghty & Miller

(6) LOCATION OF WELL By legal description

Well Location: County Multnomah

Township 1N (N or S) Range 1E (E or W) Section 18

1. SE 1/4 of NW 1/4 of above section.

2. Either Street address of well location 6500 N. Van Houghton Court - Portland, OR

or Tax lot number of well location ____

3. ATTACH MAP WITH LOCATION IDENTIFIED. Map shall include approximate scale and north arrow.

(7) STATIC WATER LEVEL:

5 Ft. below land surface. Date 12-29-94

Artesian Pressure ____ lb/sq. in. Date ____

(8) WATER BEARING ZONES:

Depth at which water was first found 11

From	To	Est. Flow Rate	SWL

(9) WELL LOG:

Ground elevation ____

Material	From	To	SWL
blackish sand & gravel	0	.5	
fine black sand	.5		
[illegible]	[illegible]	[illegible]	
[illegible]		20	

RECEIVED

JAN 12 1995

WATER RESOURCES DEP

SALEM, OREGON

Date started 12-29-94 Completed 12-29-94

(unbonded) Monitor Well Constructor Certification:

I certify that the work I performed on the construction, alteration, or abandonment of this well is in compliance with Oregon well construction standards. Materials used and information reported above are true to the best knowledge and belief.

MWC Number 10329

Signed Larry L. Brown Date 12-29-94

(bonded) Monitor Well Constructor Certification:

I accept responsibility for the construction, alteration, or abandonment work performed on this well during the construction dates reported above. All work performed during this time is in compliance with Oregon well construction standards. This report is true to the best of my knowledge and belief.

MWC Number 10024

Signed Bruce Jacobsen Date 12-29-94

OR 4032

ORIGINAL & FIRST COPY-WATER RESOURCES DEPARTMENT SECOND COPY-CONSTRUCTOR THIRD COPY-CUSTOMER

RECEIVED
MAR - 6 1995
WATER RESOURCES
SALEM, OREGON

RECEIVED
JAN 12 1995
WATER RESOURCES DEPT.
SALEM, OREGON

MULT 4528

TOTAL P.08

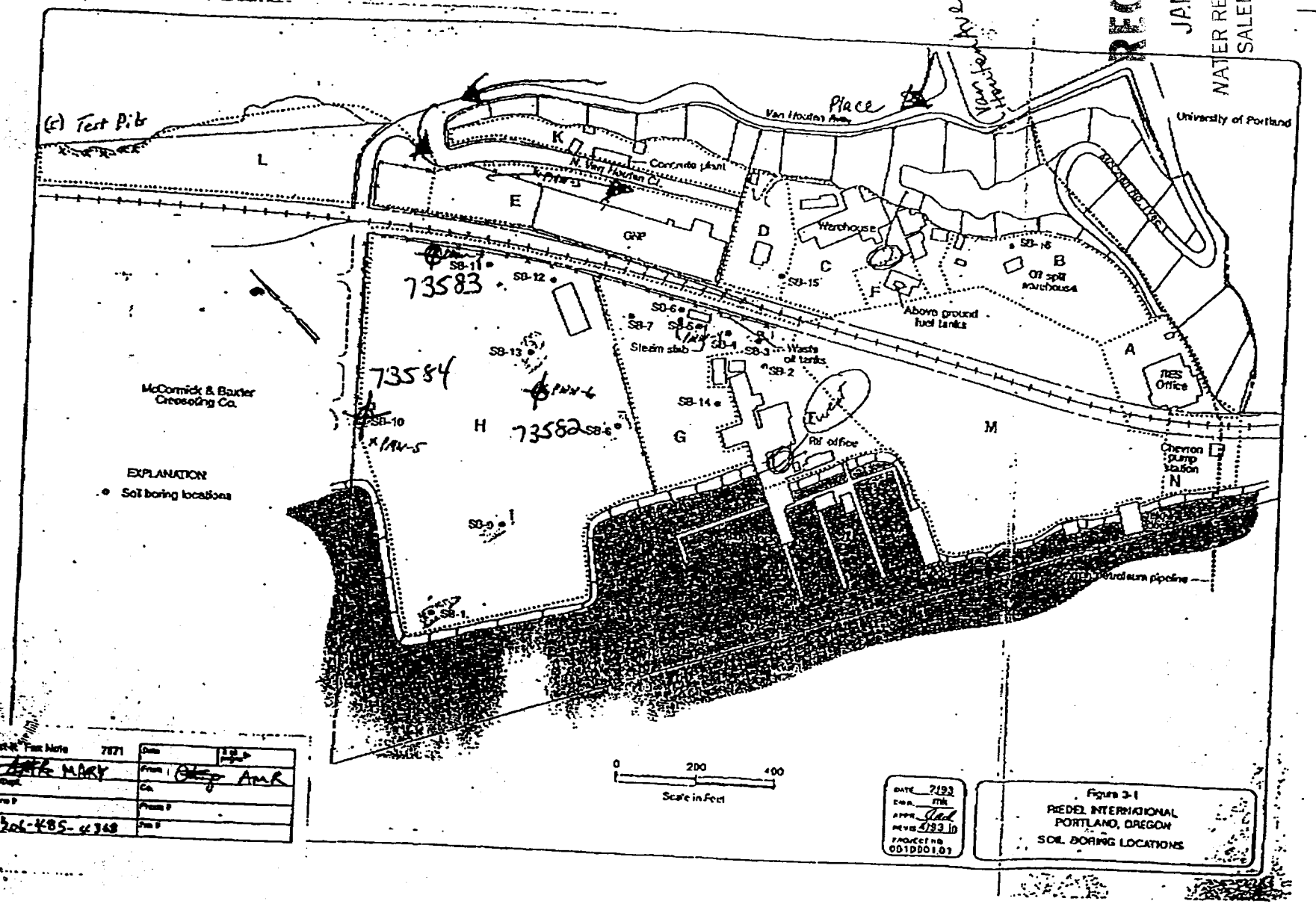

Post-it® Fax Note 7671	Date
To: Kate Mary	From: Amr
Co./Dept.	Co.
Phone #	Phone #
Fax # 206-485-4348	Fax #

MULT 76698

STATE OF OREGON

MONITORING WELL REPORT

(as required by ORS 537.765 & OAR 690-240-095)

Instructions for completing this report are on the last page of this form.

MULT 76698

~~L-73329~~ 77120

Start Card # 173339

(1) OWNER/PROJECT:

WELL NO. MW-1

Name Triangle Park LLC

Address 3131 Moody Ave

City Portland State OR Zip 97239

(2) TYPE OF WORK:

[X] New construction [ ] Alteration (Repair/Recondition)

[ ] Conversion [ ] Deepening [ ] Abandonment

(3) DRILLING METHOD

[ ] Rotary Air [ ] Rotary Mud [ ] Cable

[ ] Hollow Stem Auger [X] Other Push Probe

(4) BORE HOLE CONSTRUCTION

Special Standards Yes [ ] No [X] Depth of completed well 43 ft.

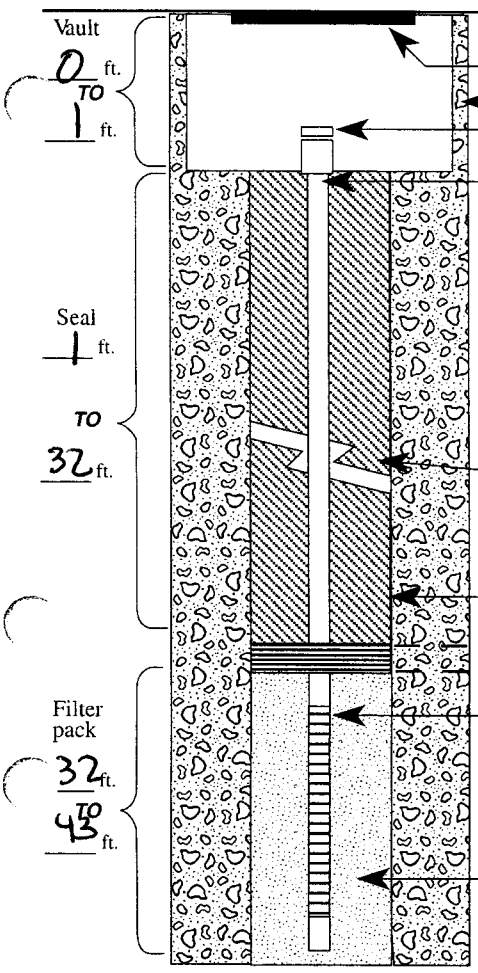

Casing diameter 2 in.

material PVC

Welded [ ] Threaded [X] Glued [ ]

Liner diameter ____ in.

material ____

Welded [ ] Threaded [ ] Glued [ ]

Well seal: Material Bentonite

Amount 3 bags

Grout weight ____

Borehole diameter 4 in.

[ ] Bentonite plug at least 3 ft. thick

Screen material PVC

interval(s): From 33 To 43

From ____ To ____

Slot size .010 in.

Filter pack: Material Sand

Size 20x40 in.

(5) WELL TEST:

[ ] Pump [ ] Bailer [ ] Air [ ] Flowing Artesian

Permeability ____ Yield ____ GPM

Conductivity ____ PH ____

Temperature of water 54 °F/C Depth artesian flow found ____ ft.

Was water analysis done? [ ] Yes [ ] No

By whom? ____

Depth of strata to be analyzed. From ____ ft. to ____ ft.

Remarks: ____

Name of supervising Geologist/Engineer ____

(6) LOCATION OF WELL By legal description

Well Location: County Multnomah

Township 1 (N or S) Range 1 (E or W) Section 7

1. NE 1/4 of NW 1/4 of above section.

2. **Either** Street address of well location 5828 N Van Houton Place

or Tax lot number of well location 100

3. ATTACH MAP WITH LOCATION IDENTIFIED. Map shall include approximate scale and north arrow.

(7) STATIC WATER LEVEL:

15.2 Ft. below land surface. Date 4/9/05

Artesian Pressure ____ lb/sq. in. Date ____

(8) WATER BEARING ZONES:

Depth at which water was first found 15.2

From	To	Est. Flow Rate	SWL
15.2	33		15.2

(9) WELL LOG:

Ground elevation ____

Material	From	To	SWL
Gravels	0	43	

RECEIVED

MAY 06 2005

WATER RESOURCES DEPT
SALEM, OREGON

Date started 4/9/05 Completed 4/9/05

(unbonded) Monitor Well Constructor Certification:

I certify that the work I performed on the construction, alteration, or abandonment of this well is in compliance with Oregon well construction standards. Materials used and information reported above are true to the best knowledge and belief.

MWC Number 10502

Signed [signature] Date 5/5/05

(bonded) Monitor Well Constructor Certification:

I accept responsibility for the construction, alteration, or abandonment work performed on this well during the construction dates reported above. All work performed during this time is in compliance with Oregon well construction standards. This report is true to the best of my knowledge and belief.

MWC Number 10211

Signed [signature] Date 5/5/05

ORIGINAL & FIRST COPY-WATER RESOURCES DEPARTMENT SECOND COPY-CONSTRUCTOR THIRD COPY-CUSTOMER

MULT 76698

RECEIVED
MAY 06 2005
WATER RESOURCES DEPT
SALEM, OREGON

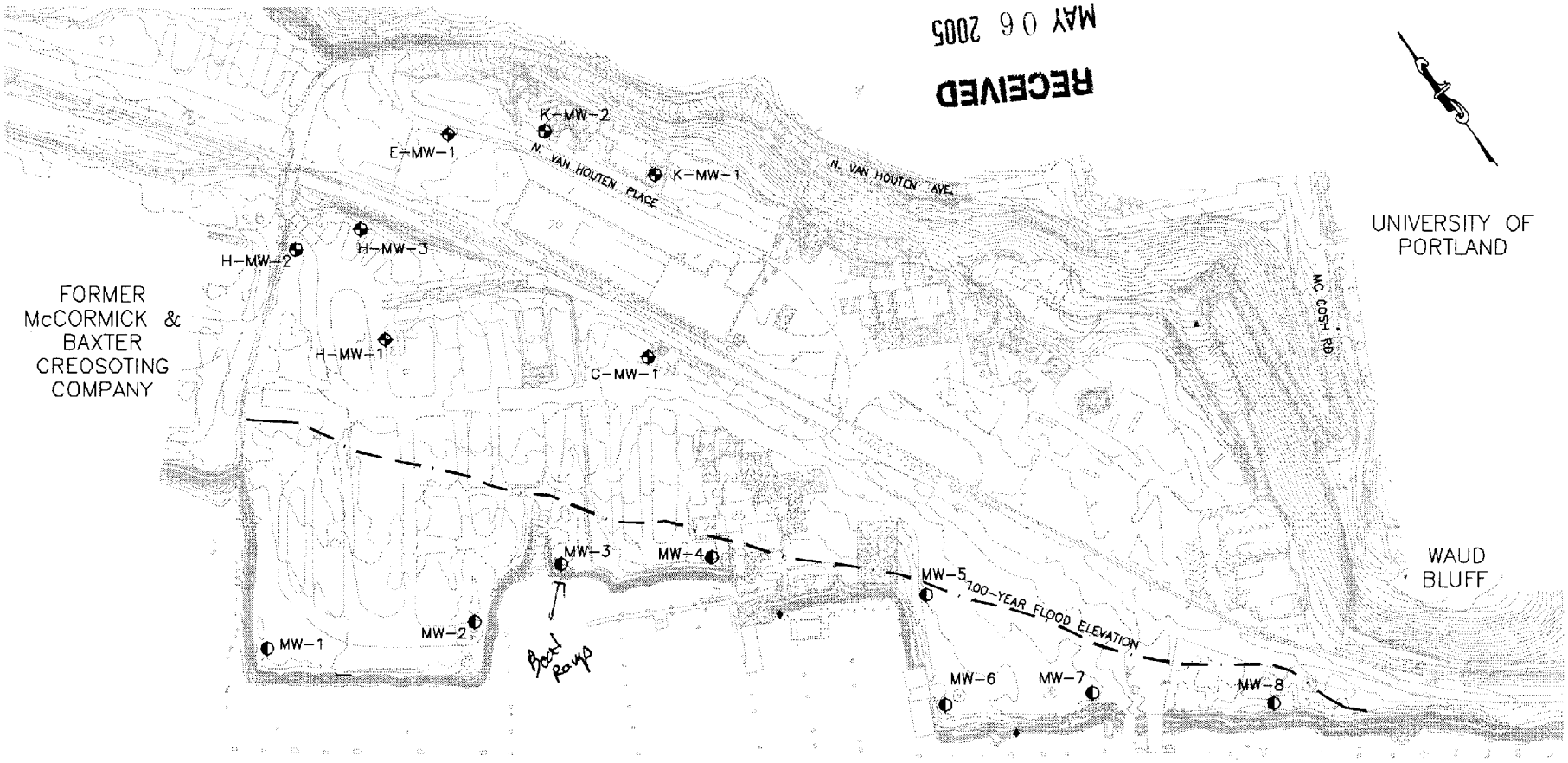

NOTES:

E-MW-1 EXISTING MONITORING WELLS

MW-4 PROPOSED MONITORING WELLS

0 200 400
SCALE IN FEET

SOURCE: BASE MAP PREPARED BY MAUL, FOSTER, AND ALONGI, MAP DATED 09.08.2004

geology and environment, inc.
International Specialists in the Environment
Portland, Oregon

DESIGNED BY
DRAWN BY
APPROVED BY

FIGURE 2
EXISTING AND PROPOSED MONITORING WELL LOCATION MAP
TRIANGLE PARK, L.L.C.
PORTLAND, OREGON

SCALE: NOTED
DATE: 5-23-05

MULT 76700

STATE OF OREGON

MONITORING WELL REPORT

(as required by ORS 537.765 & OAR 690-240-095)

Instructions for completing this report are on the last page of this form.

MULT 76700

L73330 77118

Start Card # 173340

(1) OWNER/PROJECT: WELL NO. MW-2

Name Triangle Park LLC

Address 3131 Moody Ave

City Portland State OR Zip 97239

(2) TYPE OF WORK:

[X] New construction [ ] Alteration (Repair/Recondition)

[ ] Conversion [ ] Deepening [ ] Abandonment

(3) DRILLING METHOD

[ ] Rotary Air [ ] Rotary Mud [ ] Cable

[ ] Hollow Stem Auger [X] Other Push Probe

(4) BORE HOLE CONSTRUCTION

Special Standards Yes [ ] No [X] Depth of completed well 45 ft.

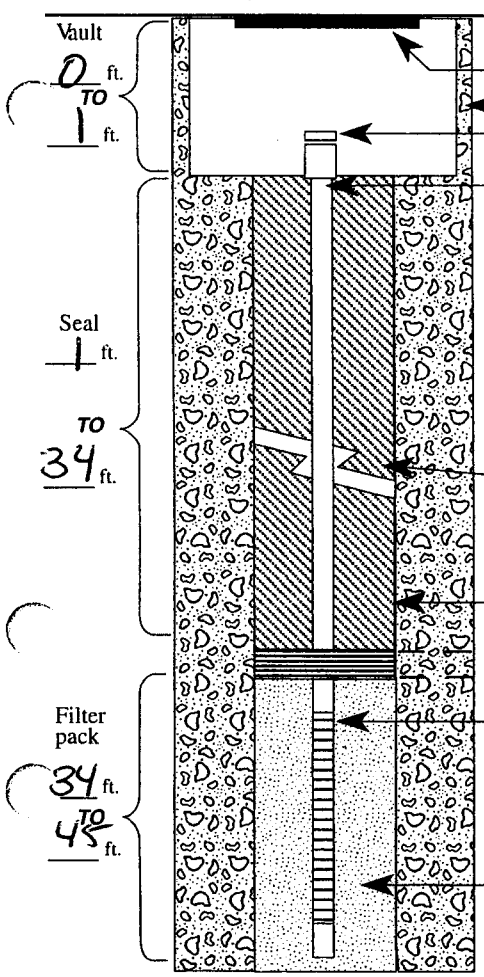

Water-tight cover

Surface flush vault

Locking cap

Casing diameter 2 in.

material PVC

Welded [ ] Threaded [X] Glued [ ]

Liner diameter ____ in.

material ____

Welded [ ] Threaded [ ] Glued [ ]

Well seal: Material Bentonite

Amount 3 bags

Grout weight ____

Borehole diameter 4 in.

Bentonite plug at least 3 ft. thick

Screen material PVC

interval(s): From 35 To 45

From ____ To ____

Slot size .010 in.

Filter pack: Material Sand

Size 20 x 40 in.

(5) WELL TEST:

[ ] Pump [ ] Bailer [ ] Air [ ] Flowing Artesian

Permeability ____ Yield ____ GPM

Conductivity ____ PH ____

Temperature of water 54 °F/C Depth artesian flow found ____ ft.

Was water analysis done? [ ] Yes [ ] No

By whom? ____

Depth of strata to be analyzed. From ____ ft. to ____ ft.

Remarks: ____

Name of supervising Geologist/Engineer ____

(6) LOCATION OF WELL By legal description

Well Location: County Multnomah

Township 1 (N or S) Range 1 (E or W) Section 7

1. NE 1/4 of NW 1/4 of above section.

2. **Either** Street address of well location 5828 N Van Houton Place

or Tax lot number of well location 100

3. ATTACH MAP WITH LOCATION IDENTIFIED. Map shall include approximate scale and north arrow.

(7) STATIC WATER LEVEL:

14.5 Ft. below land surface. Date 4/9/05

Artesian Pressure ____ lb/sq. in. Date ____

(8) WATER BEARING ZONES:

Depth at which water was first found 14.5

From	To	Est. Flow Rate	SWL
14.5	45		14.5

(9) WELL LOG: Ground elevation ____

Material	From	To	SWL
Gravels	0	45	

RECEIVED

MAY 0 6 2005

WATER RESOURCES DEPT
SALEM, OREGON

Date started 4/9/05 Completed 4/9/05

(unbonded) Monitor Well Constructor Certification:

I certify that the work I performed on the construction, alteration, or abandonment of this well is in compliance with Oregon well construction standards. Materials used and information reported above are true to the best knowledge and belief.

MWC Number 10502

Signed ____ Date 5/5/05

(bonded) Monitor Well Constructor Certification:

I accept responsibility for the construction, alteration, or abandonment work performed on this well during the construction dates reported above. All work performed during this time is in compliance with Oregon well construction standards. This report is true to the best of my knowledge and belief.

MWC Number 10211

Signed ____ Date 5/5/05

ORIGINAL & FIRST COPY-WATER RESOURCES DEPARTMENT SECOND COPY-CONSTRUCTOR THIRD COPY-CUSTOMER

MULT 76700

RECEIVED
MAY 06 2005
WATER RESOURCES DEPT
SALEM, OREGON

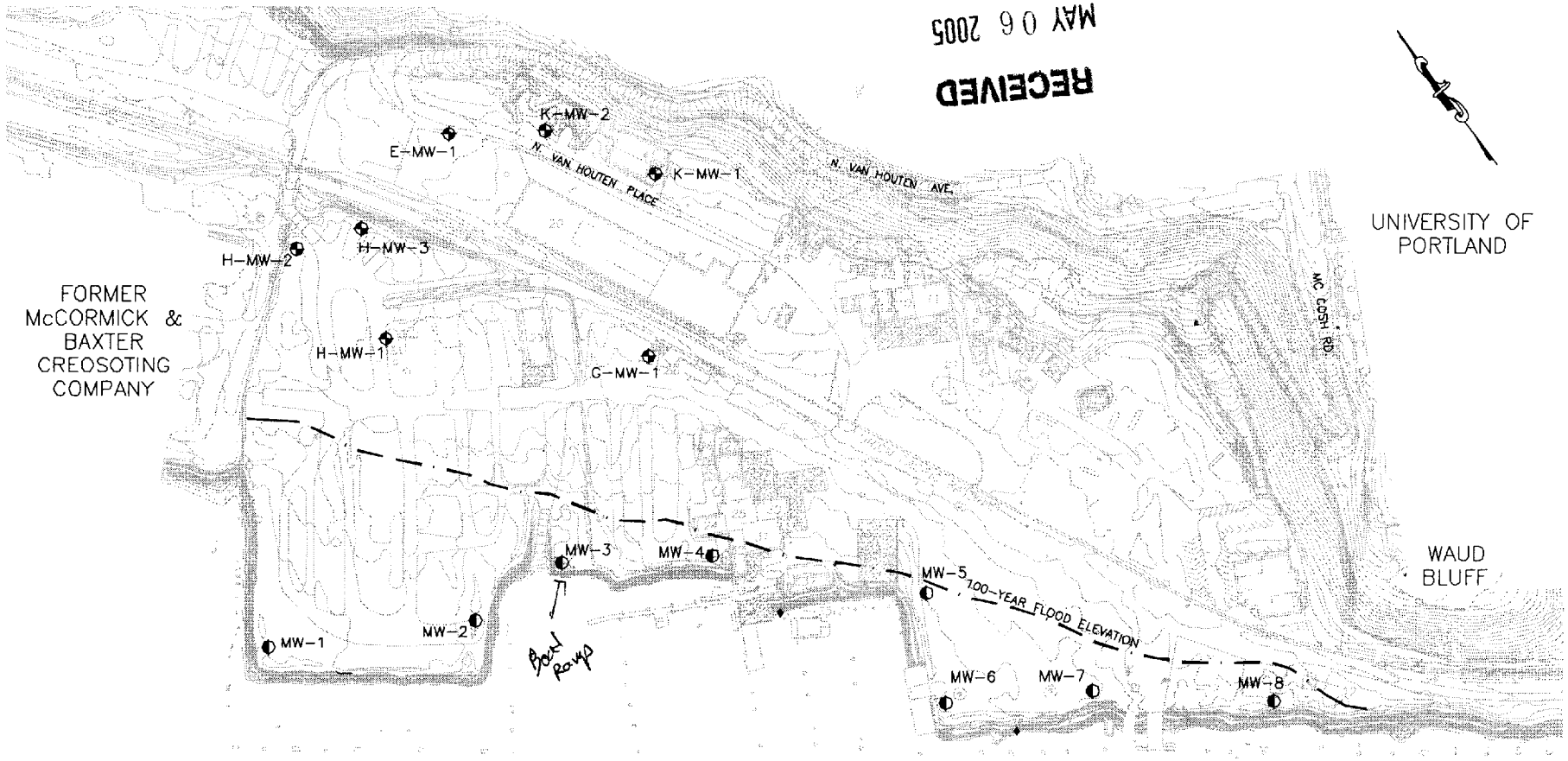

NOTES:

E-MW-1 EXISTING MONITORING WELLS

MW-4 PROPOSED MONITORING WELLS

0 200 400
SCALE IN FEET

SOURCE: BASE MAP PREPARED BY MAUL, FOSTER, AND ALONGI, MAP DATED 09.08.2004

geology and environment, inc.
International Specialists in the Environment
Portland, Oregon

DESIGNED BY:
DRAWN BY: AJK

FIGURE 2
EXISTING AND PROPOSED MONITORING WELL LOCATION MAP
TRIANGLE PARK, L.L.C.
PORTLAND, OREGON

SCALE: NOTED

MULT 76704

STATE OF OREGON

MONITORING WELL REPORT

(as required by ORS 537.765 & OAR 690-240-095)

Instructions for completing this report are on the last page of this form.

MULT 76704

L73331

Start Card # 173341

(1) OWNER/PROJECT: WELL NO. MW-3

Name Triangle Park LLC

Address 3131 Moody Ave

City Portland State OR Zip 97239

(2) TYPE OF WORK:

[X] New construction [ ] Alteration (Repair/Recondition)

[ ] Conversion [ ] Deepening [ ] Abandonment

(3) DRILLING METHOD

[ ] Rotary Air [ ] Rotary Mud [ ] Cable

[ ] Hollow Stem Auger [X] Other Push Probe

(4) BORE HOLE CONSTRUCTION

Special Standards Yes [ ] No [X] Depth of completed well 33 ft.

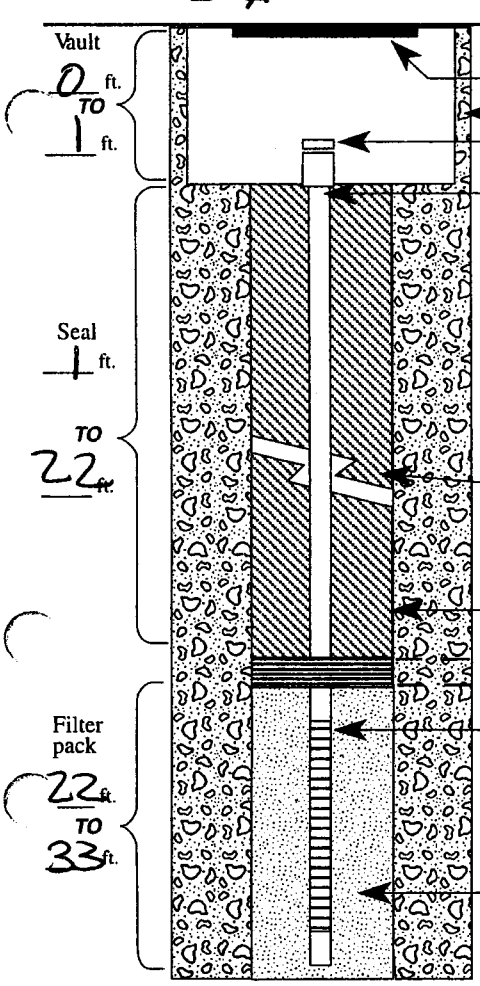

Water-tight cover

Surface flush vault

Locking cap

Casing diameter 2 in.

material PVC

Welded [ ] Threaded [X] Glued [ ]

Liner diameter ____ in.

material ____

Welded [ ] Threaded [ ] Glued [ ]

Well seal: Material Bentonite

Amount 2 bags

Grout weight ____

Borehole diameter 4 in.

Bentonite plug at least 3 ft. thick

Screen material PVC

interval(s): From 23 To 33

From ____ To ____

Slot size .010 in.

Filter pack: Material Sand

Size 20x40 in.

(5) WELL TEST:

[ ] Pump [ ] Bailer [ ] Air [ ] Flowing Artesian

Permeability ____ Yield ____ GPM

Conductivity ____ PH ____

Temperature of water 54 °F/C Depth artesian flow found ____ ft.

Was water analysis done? [ ] Yes [ ] No

By whom? ____

Depth of strata to be analyzed. From ____ ft. to ____ ft.

Remarks: ____

Name of supervising Geologist/Engineer ____

(6) LOCATION OF WELL By legal description

Well Location: County Multnomah

Township 1 (N or S) Range 1 (E or W) Section 7

1. NE 1/4 of NW 1/4 of above section.

2. Either Street address of well location 5828 N. Van Houton Place

or Tax lot number of well location 100

3. ATTACH MAP WITH LOCATION IDENTIFIED. Map shall include approximate scale and north arrow.

(7) STATIC WATER LEVEL:

9.13 Ft. below land surface. Date 4/9/05

Artesian Pressure ____ lb/sq. in. Date ____

(8) WATER BEARING ZONES:

Depth at which water was first found 9.13

From	To	Est. Flow Rate	SWL
9.13	33		9.13

(9) WELL LOG: Ground elevation ____

Material	From	To	SWL
Gravels	0	33	

RECEIVED AUG 15 2005 WATER RESOURCES DEPT SALEM, OREGON

RECEIVED MAY 06 2005 WATER RESOURCES DEPT SALEM, OREGON

Date started 4/9/05 Completed 4/9/05

(unbonded) Monitor Well Constructor Certification:

I certify that the work I performed on the construction, alteration, or abandonment of this well is in compliance with Oregon well construction standards. Materials used and information reported above are true to the best knowledge and belief.

MWC Number 10502

Signed ____ Date 5/5/05

(bonded) Monitor Well Constructor Certification:

I accept responsibility for the construction, alteration, or abandonment work performed on this well during the construction dates reported above. All work performed during this time is in compliance with Oregon well construction standards. This report is true to the best of my knowledge and belief.

MWC Number 10211

Signed ____ Date 5/5/05

ORIGINAL & FIRST COPY-WATER RESOURCES DEPARTMENT SECOND COPY-CONSTRUCTOR THIRD COPY-CUSTOMER

RECEIVED
MAY 06 2005
WATER RESOURCES DEPT
SALEM, OREGON

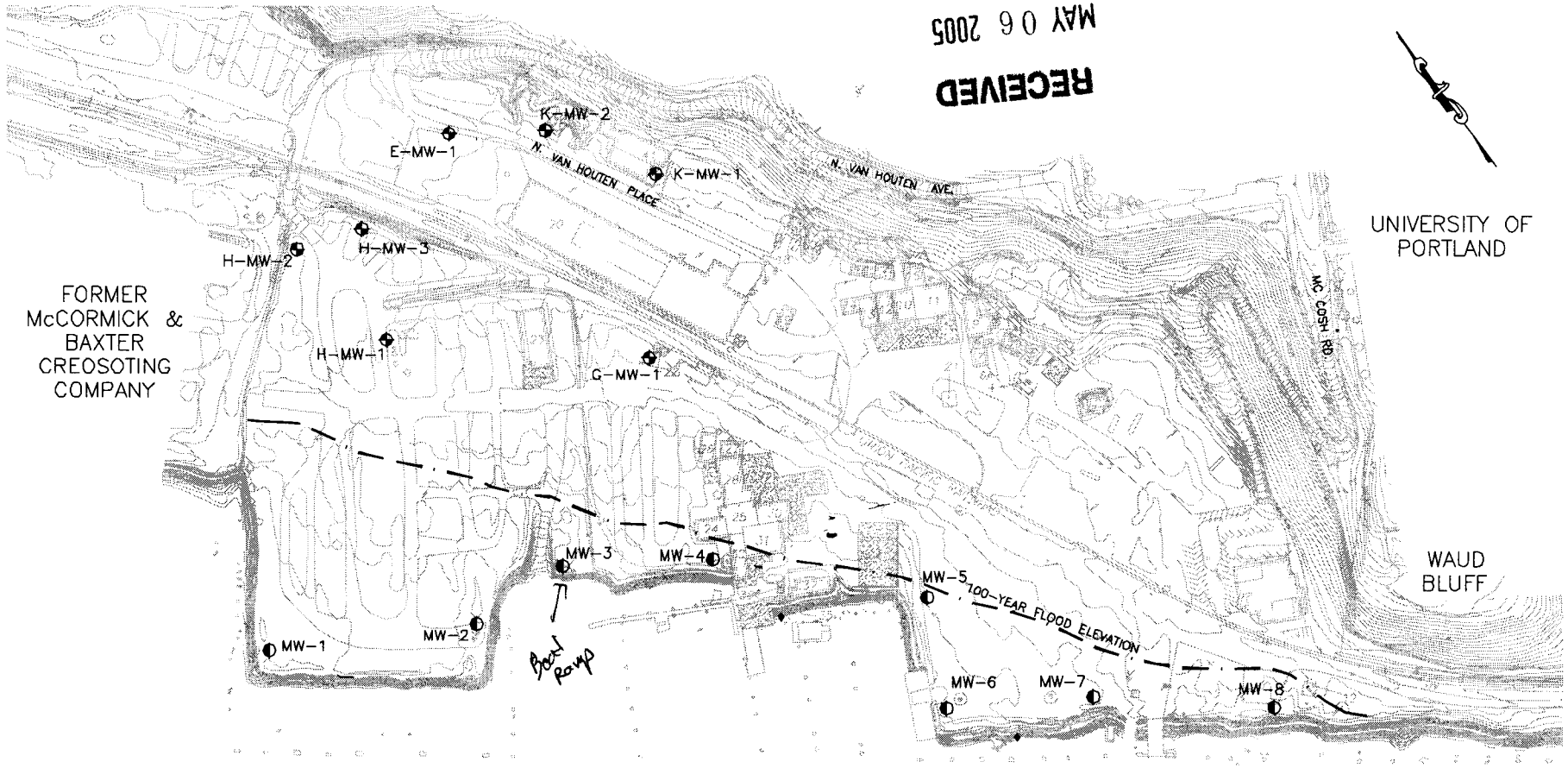

RECEIVED
AUG 15 2005
WATER RESOURCES DEPT
SALEM, OREGON

NOTES:

E-MW-1 EXISTING MONITORING WELLS

MW-4 PROPOSED MONITORING WELLS

0 200 400
SCALE IN FEET

SOURCE: BASE MAP PREPARED BY MAUL, FOSTER, AND ALONGI, MAP DATED 09.08.2004

Geology and environment, Inc.
International Specialists in the Environment
Portland, Oregon

DESIGNED BY:
CHECKED BY:
DRAWN BY: AJV

FIGURE 2
EXISTING AND PROPOSED MONITORING WELL LOCATION MAP
TRIANGLE PARK, L.L.C.
PORTLAND, OREGON

SCALE: NOTED
DATE: 8-26-04

MULT 76704

MULT 76705

STATE OF OREGON

MONITORING WELL REPORT

(as required by ORS 537.765 & OAR 690-240-095)

Instructions for completing this report are on the last page of this form.

L73332

Start Card # 173342

(1) OWNER/PROJECT: WELL NO. MW-4

Name Triangle Park LLC

Address 3131 Moody Ave

City Portland State OR Zip 97239

(2) TYPE OF WORK:

[X] New construction [ ] Alteration (Repair/Recondition)

[ ] Conversion [ ] Deepening [ ] Abandonment

(3) DRILLING METHOD

[ ] Rotary Air [ ] Rotary Mud [ ] Cable

[ ] Hollow Stem Auger [X] Other Push Probe

(4) BORE HOLE CONSTRUCTION

Special Standards Yes [ ] No [X] Depth of completed well 38.3 ft.

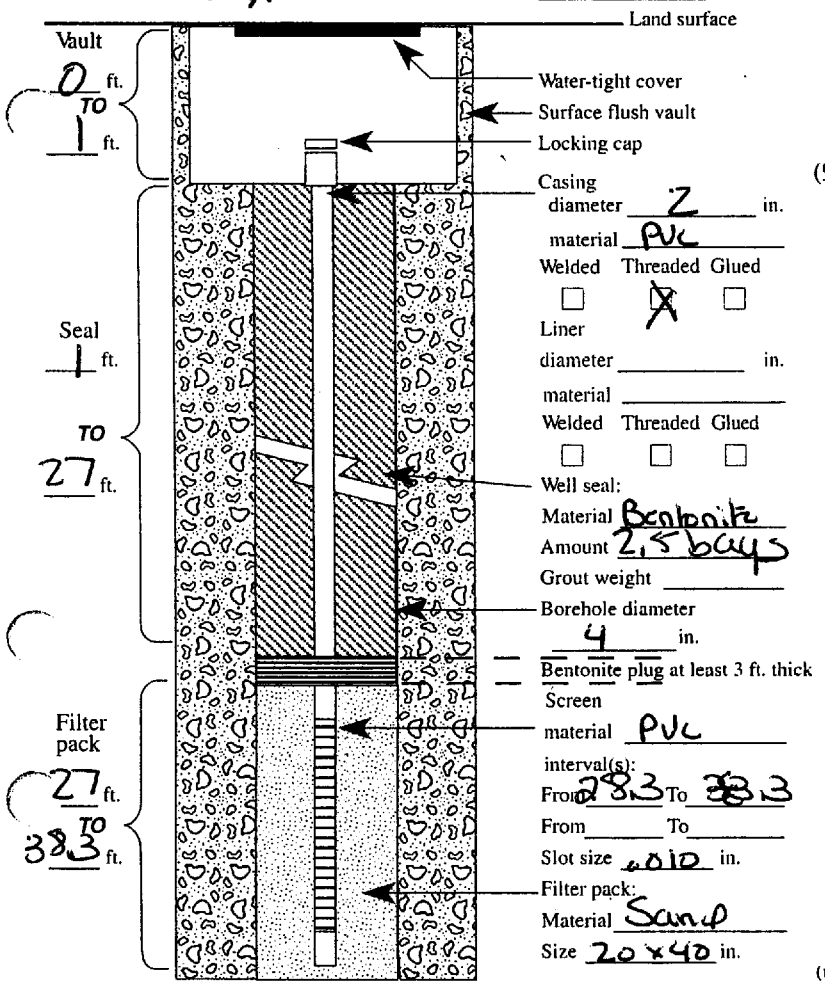

(5) WELL TEST:

[ ] Pump [ ] Bailer [ ] Air [ ] Flowing Artesian

Permeability Yield GPM

Conductivity PH

Temperature of water 54 °F/C Depth artesian flow found ft.

Was water analysis done? [ ] Yes [ ] No

By whom?

Depth of strata to be analyzed. From ft. to ft.

Remarks:

Name of supervising Geologist/Engineer

(6) LOCATION OF WELL By legal description

Well Location: County Multnomah

Township 1 (N or S) Range 1 (E or W) Section 7

1. NE 1/4 of NW 1/4 of above section.

2. Either Street address of well location 5828 N Van Houton Place

or Tax lot number of well location 100

3. ATTACH MAP WITH LOCATION IDENTIFIED. Map shall include approximate scale and north arrow.

(7) STATIC WATER LEVEL:

16.65 Ft. below land surface. Date 4/9/05

Artesian Pressure lb/sq. in. Date

(8) WATER BEARING ZONES:

Depth at which water was first found 16.65

From	To	Est. Flow Rate	SWL
16.65	38.3		16.65

(9) WELL LOG: Ground elevation

Material	From	To	SWL
Gravels	0	38.3	

RECEIVED

MAY 06 2005

WATER RESOURCES DEPT
SALEM, OREGON

Date started 4/9/05 Completed 4/9/05

(unbonded) Monitor Well Constructor Certification:

I certify that the work I performed on the construction, alteration, or abandonment of this well is in compliance with Oregon well construction standards. Materials used and information reported above are true to the best knowledge and belief.

MWC Number 10502

Signed Date 5/5/05

(bonded) Monitor Well Constructor Certification:

I accept responsibility for the construction, alteration, or abandonment work performed on this well during the construction dates reported above. All work performed during this time is in compliance with Oregon well construction standards. This report is true to the best of my knowledge and belief.

MWC Number 10211

Signed Date 5/5/05

ORIGINAL & FIRST COPY-WATER RESOURCES DEPARTMENT SECOND COPY-CONSTRUCTOR THIRD COPY-CUSTOMER

MULT 76705

RECEIVED
MAY 06 2005
WATER RESOURCES DEPT
SALEM, OREGON

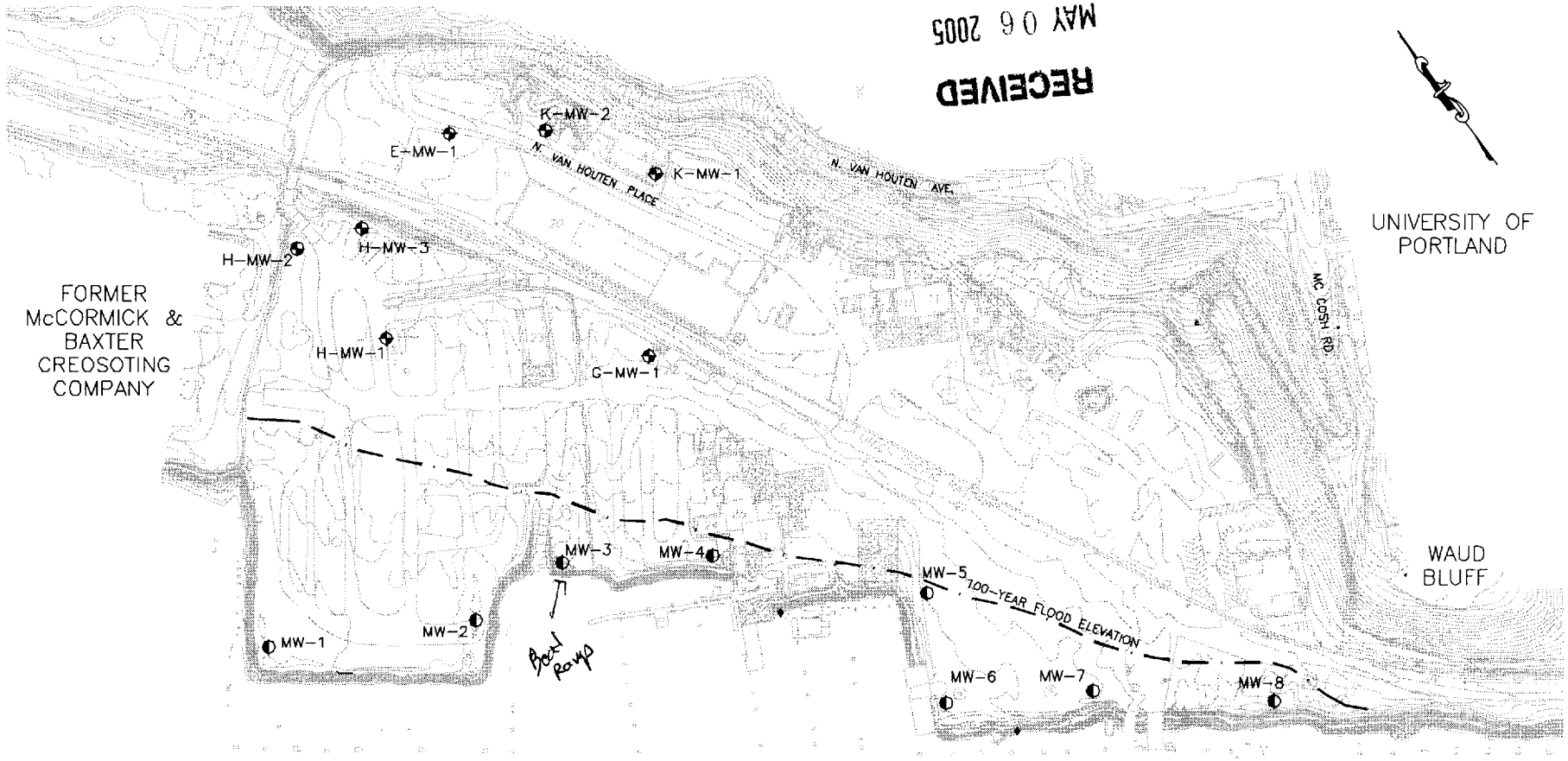

NOTES:

E-MW-1 EXISTING MONITORING WELLS

MW-4 PROPOSED MONITORING WELLS

0 200 400
SCALE IN FEET

SOURCE: BASE MAP PREPARED BY MAUL, FOSTER, AND ALONGI, MAP DATED 09.08.2004

geology and environment, inc.
International Specialists in the Environment
Portland, Oregon

DESIGNED BY:
DRAWN BY:

FIGURE 2
EXISTING AND PROPOSED MONITORING WELL LOCATION MAP
TRIANGLE PARK, L.L.C.
PORTLAND, OREGON

MULT 76707

STATE OF OREGON

MONITORING WELL REPORT

(as required by ORS 537.765 & OAR 690-240-095)

Instructions for completing this report are on the last page of this form.

L 73333

Start Card # 173343

(1) OWNER/PROJECT: WELL NO. MW-5

Name Triangle Park LLC

Address 3131 Moody Ave

City Portland State OR Zip 97239

(2) TYPE OF WORK:

[X] New construction [ ] Alteration (Repair/Recondition)

[ ] Conversion [ ] Deepening [ ] Abandonment

(3) DRILLING METHOD

[ ] Rotary Air [ ] Rotary Mud [ ] Cable

[ ] Hollow Stem Auger [X] Other Push Probe

(4) BORE HOLE CONSTRUCTION

Special Standards Yes [ ] No [X] Depth of completed well 40.55 ft.

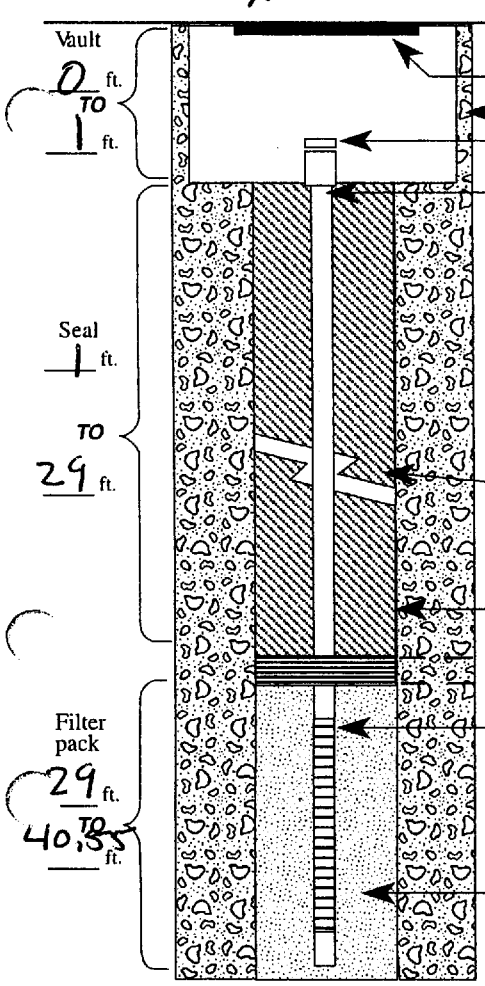

(5) WELL TEST:

[ ] Pump [ ] Bailer [ ] Air [ ] Flowing Artesian

Permeability Yield GPM

Conductivity PH

Temperature of water 54 °F/C Depth artesian flow found ft.

Was water analysis done? [ ] Yes [ ] No

By whom?

Depth of strata to be analyzed. From ft. to ft.

Remarks:

Name of supervising Geologist/Engineer

(6) LOCATION OF WELL By legal description

Well Location: County Multnomah

Township 1 (N or S) Range 1 (E or W) Section 7

1. NE 1/4 of NW 1/4 of above section.

2. Either Street address of well location 5828 N Van Houton Place

or Tax lot number of well location 100

3. ATTACH MAP WITH LOCATION IDENTIFIED. Map shall include approximate scale and north arrow.

(7) STATIC WATER LEVEL:

20.55 Ft. below land surface. Date 4/9/05

Artesian Pressure lb/sq. in. Date

(8) WATER BEARING ZONES:

Depth at which water was first found 20.55

From	To	Est. Flow Rate	SWL
20.55	40.55		20.55

(9) WELL LOG: Ground elevation

Material	From	To	SWL
Gravels	0	40.55	

RECEIVED
MAY 06 2005
WATER RESOURCES DEPT
SALEM, OREGON

Date started 4/9/05 Completed 4/9/05

(unbonded) Monitor Well Constructor Certification:

I certify that the work I performed on the construction, alteration, or abandonment of this well is in compliance with Oregon well construction standards. Materials used and information reported above are true to the best knowledge and belief.

MWC Number 10502

Signed [signature] Date 5/5/05

(bonded) Monitor Well Constructor Certification:

I accept responsibility for the construction, alteration, or abandonment work performed on this well during the construction dates reported above. All work performed during this time is in compliance with Oregon well construction standards. This report is true to the best of my knowledge and belief.

MWC Number 10011

Signed [signature] Date 5/5/05

ORIGINAL & FIRST COPY-WATER RESOURCES DEPARTMENT SECOND COPY-CONSTRUCTOR THIRD COPY-CUSTOMER

MULT 76707

RECEIVED
MAY 06 2005
WATER RESOURCES DEPT
SALEM, OREGON

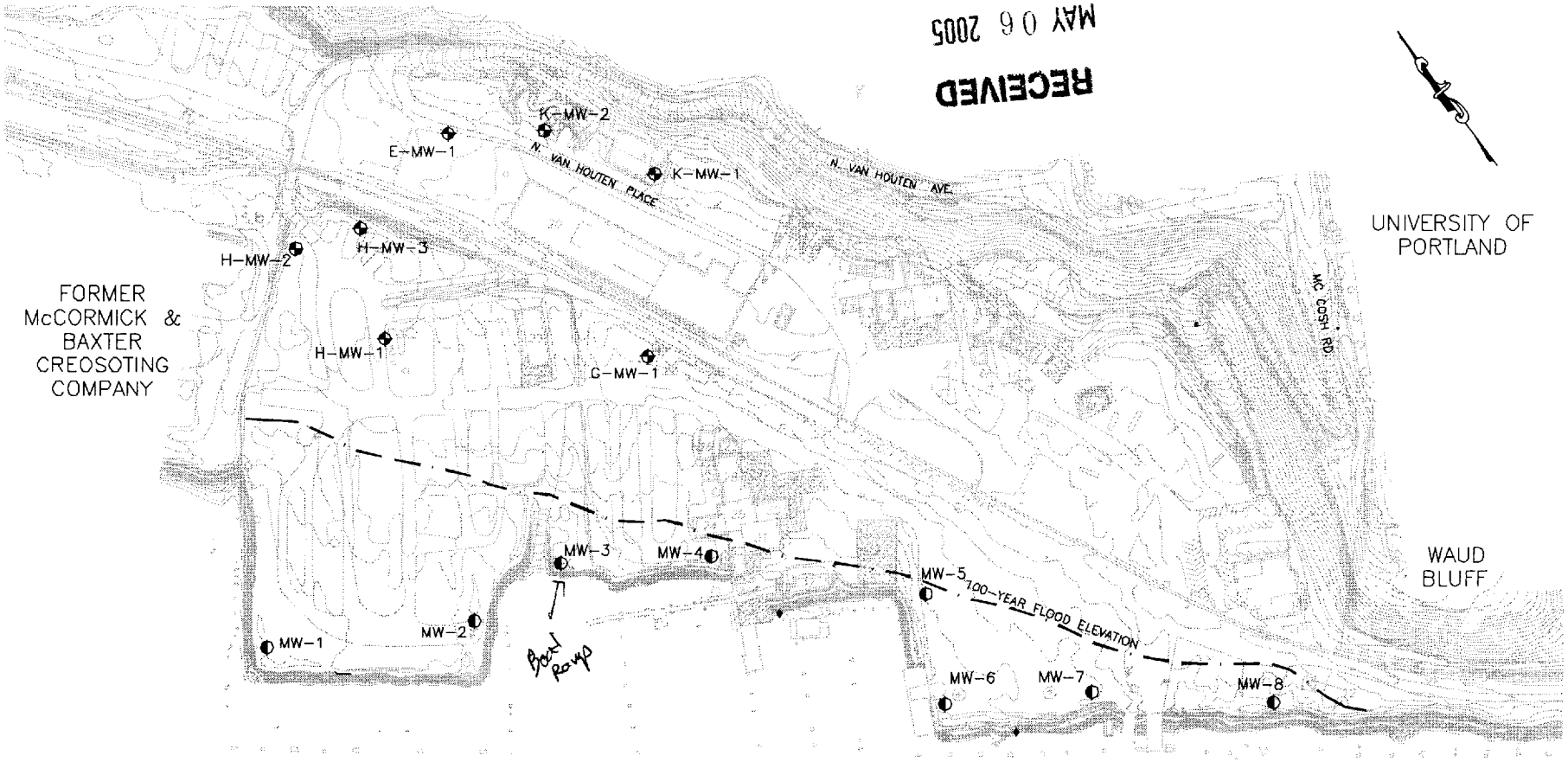

NOTES:

E-MW-1 EXISTING MONITORING WELLS

MW-4 PROPOSED MONITORING WELLS

0 200 400
SCALE IN FEET

SOURCE: BASE MAP PREPARED BY MAUL, FOSTER, AND ALONGI, MAP DATED 09.08.2004

Geology and environment, Inc.
International Specialists in the Environment
Portland, Oregon

DESIGNED BY
CHECKED BY
DRAWN BY AJV

FIGURE 2
EXISTING AND PROPOSED MONITORING WELL LOCATION MAP
TRIANGLE PARK, L.L.C.
PORTLAND, OREGON

SCALE NOTED | DATE 5-23-04

MULT 76709

STATE OF OREGON

MONITORING WELL REPORT

(as required by ORS 537.765 & OAR 690-240-095)

Instructions for completing this report are on the last page of this form.

L73334

Start Card # 173344

(1) OWNER/PROJECT: WELL NO. MW- 4

Name Triangle Park LLC

Address 3131 Moody Ave

City Portland State OR Zip 97239

(2) TYPE OF WORK:

[X] New construction [ ] Alteration (Repair/Recondition)

[ ] Conversion [ ] Deepening [ ] Abandonment

(3) DRILLING METHOD

[ ] Rotary Air [ ] Rotary Mud [ ] Cable

[ ] Hollow Stem Auger [X] Other Push Probe

(4) BORE HOLE CONSTRUCTION

Special Standards Yes [ ] No [X] Depth of completed well 42 ft.

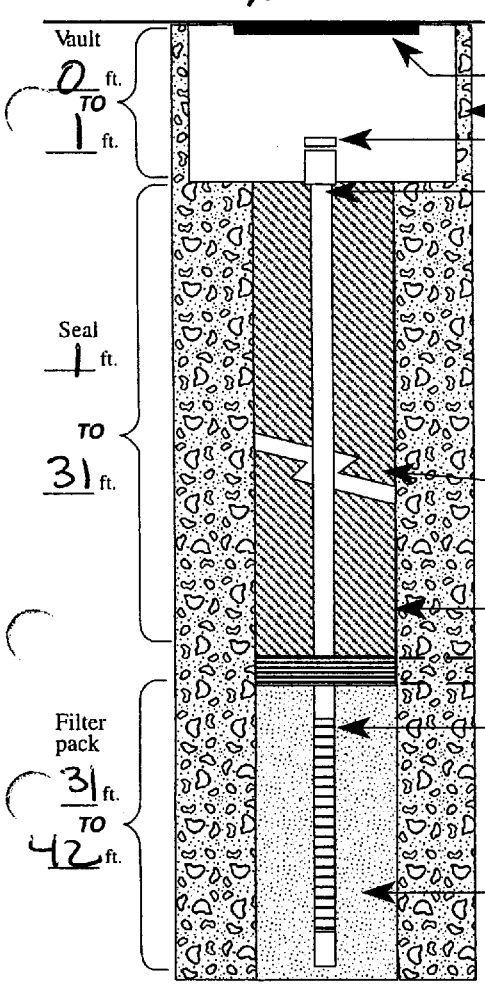

Water-tight cover

Surface flush vault

Locking cap

Casing diameter 2 in.

material PVC

Welded [ ] Threaded [X] Glued [ ]

Liner diameter ____ in.

material ____

Welded [ ] Threaded [ ] Glued [ ]

Well seal:

Material Bentonite

Amount 3 bags

Grout weight ____

Borehole diameter 4 in.

Bentonite plug at least 3 ft. thick

Screen material PVC

interval(s): From 32 To 42

From ____ To ____

Slot size .010 in.

Filter pack: Material Sand

Size 20x40 in.

(5) WELL TEST:

[ ] Pump [ ] Bailer [ ] Air [ ] Flowing Artesian

Permeability ____ Yield ____ GPM

Conductivity ____ PH ____

Temperature of water 54 °F/C Depth artesian flow found ____ ft.

Was water analysis done? [ ] Yes [ ] No

By whom? ____

Depth of strata to be analyzed. From ____ ft. to ____ ft.

Remarks: ____

Name of supervising Geologist/Engineer ____

(6) LOCATION OF WELL By legal description

Well Location: County Multnomah

Township 1 (N or S) Range 1 (E or W) Section 7

1. NE 1/4 of NW 1/4 of above section.

2. Either Street address of well location 5828 N Van Houton Place

or Tax lot number of well location 100

3. ATTACH MAP WITH LOCATION IDENTIFIED. Map shall include approximate scale and north arrow.

(7) STATIC WATER LEVEL:

20.78 Ft. below land surface. Date 4/9/05

Artesian Pressure ____ lb/sq. in. Date ____

(8) WATER BEARING ZONES:

Depth at which water was first found 20.78

From	To	Est. Flow Rate	SWL
20.78	42		20.78

(9) WELL LOG: Ground elevation ____

Material	From	To	SWL
Gravels	0	42	

RECEIVED

MAY 06 2005

WATER RESOURCES DEPT
SALEM, OREGON

Date started 4/9/05 Completed 4/9/05

(unbonded) Monitor Well Constructor Certification:

I certify that the work I performed on the construction, alteration, or abandonment of this well is in compliance with Oregon well construction standards. Materials used and information reported above are true to the best knowledge and belief.

MWC Number 10502

Signed [signature] Date 5/5/05

(bonded) Monitor Well Constructor Certification:

I accept responsibility for the construction, alteration, or abandonment work performed on this well during the construction dates reported above. All work performed during this time is in compliance with Oregon well construction standards. This report is true to the best of my knowledge and belief.

MWC Number 10211

Signed [signature] Date 5/5/05

ORIGINAL & FIRST COPY-WATER RESOURCES DEPARTMENT SECOND COPY-CONSTRUCTOR THIRD COPY-CUSTOMER

RECEIVED
MAY 06 2005
WATER RESOURCES DEPT
SALEM, OREGON

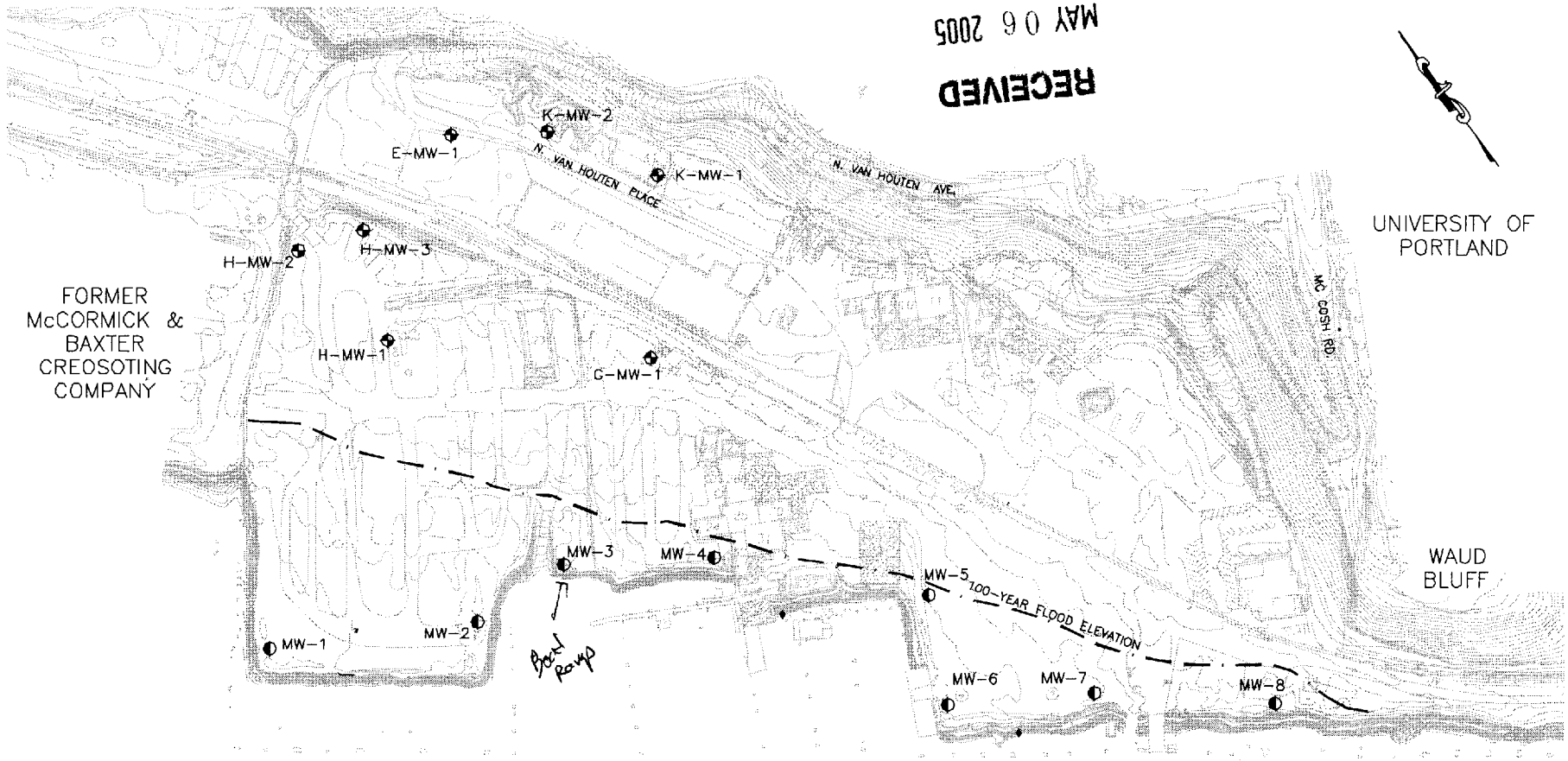

NOTES:

E-MW-1 EXISTING MONITORING WELLS

MW-4 PROPOSED MONITORING WELLS

0 200 400
SCALE IN FEET

SOURCE: BASE MAP PREPARED BY MAUL, FOSTER, AND ALONGI, MAP DATED 09.08.2004

geology and environment, inc.
International Specialists in the Environment
Portland, Oregon

DESIGNED BY:
CHECKED BY:
DRAWN BY: AJF

FIGURE 2
EXISTING AND PROPOSED MONITORING WELL LOCATION MAP
TRIANGLE PARK, L.L.C.
PORTLAND, OREGON

SCALE: NOTED
DATE ISSUED: 9-22-04

MULT 76709

MULT 76711

STATE OF OREGON

MONITORING WELL REPORT

(as required by ORS 537.765 & OAR 690-240-095)

Instructions for completing this report are on the last page of this form.

L73335

Start Card # 173345

(1) OWNER/PROJECT: WELL NO. MW-7

Name Triangle Park LLC

Address 3131 Moody Ave

City Portland State OR Zip 97239

(2) TYPE OF WORK:

[X] New construction [ ] Alteration (Repair/Recondition)

[ ] Conversion [ ] Deepening [ ] Abandonment

(3) DRILLING METHOD

[ ] Rotary Air [ ] Rotary Mud [ ] Cable

[ ] Hollow Stem Auger [X] Other Push Probe

(4) BORE HOLE CONSTRUCTION

Special Standards Yes [ ] No [X] Depth of completed well 38 ft.

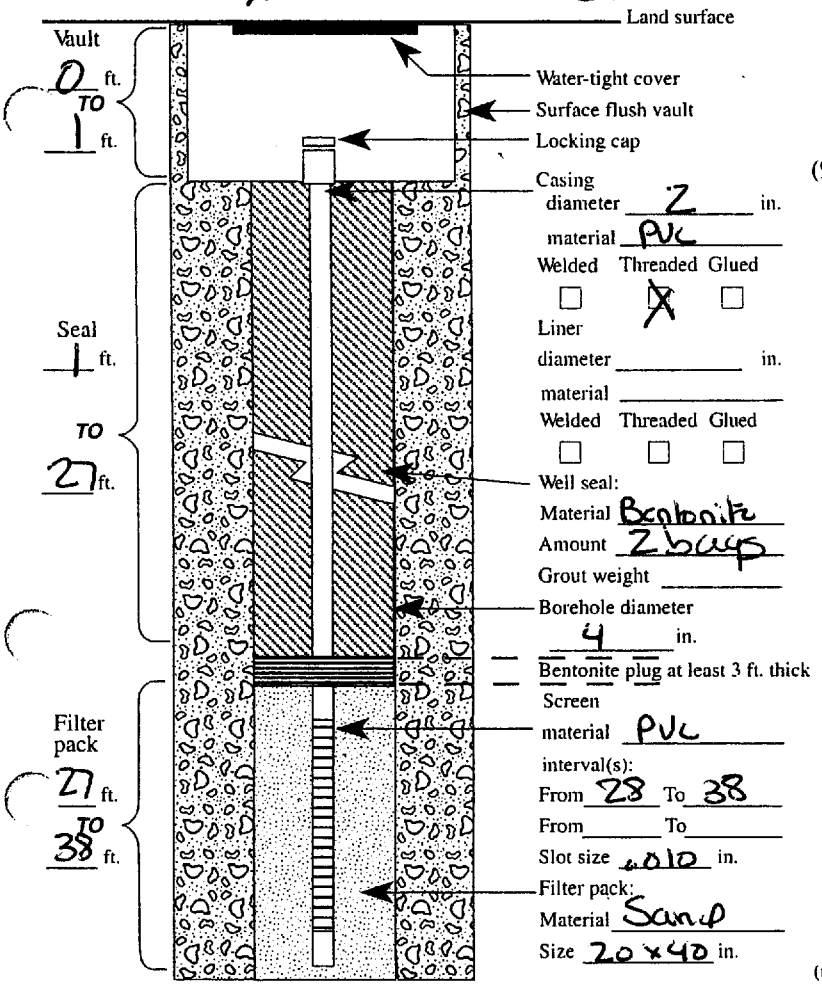

(5) WELL TEST:

[ ] Pump [ ] Bailer [ ] Air [ ] Flowing Artesian

Permeability Yield GPM

Conductivity PH

Temperature of water 54 °F/C Depth artesian flow found ft.

Was water analysis done? [ ] Yes [ ] No

By whom?

Depth of strata to be analyzed. From ft. to ft.

Remarks:

Name of supervising Geologist/Engineer

(6) LOCATION OF WELL By legal description

Well Location: County Multnomah

Township 1 (N or S) Range 1 (E or W) Section 7

1. NE 1/4 of NW 1/4 of above section.

2. Either Street address of well location 5828 N Van Houton Place

or Tax lot number of well location 100

3. ATTACH MAP WITH LOCATION IDENTIFIED. Map shall include approximate scale and north arrow.

(7) STATIC WATER LEVEL:

23 Ft. below land surface. Date 4/9/05

Artesian Pressure lb/sq. in. Date

(8) WATER BEARING ZONES:

Depth at which water was first found 23

From	To	Est. Flow Rate	SWL
23	38		23

(9) WELL LOG: Ground elevation

Material	From	To	SWL
Gravels	0	38	

RECEIVED
MAY 06 2005
WATER RESOURCES DEPT
SALEM, OREGON

Date started 4/9/05 Completed 4/9/05

(unbonded) Monitor Well Constructor Certification:

I certify that the work I performed on the construction, alteration, or abandonment of this well is in compliance with Oregon well construction standards. Materials used and information reported above are true to the best knowledge and belief.

MWC Number 10502

Signed [signature] Date 5/5/05

(bonded) Monitor Well Constructor Certification:

I accept responsibility for the construction, alteration, or abandonment work performed on this well during the construction dates reported above. All work performed during this time is in compliance with Oregon well construction standards. This report is true to the best of my knowledge and belief.

MWC Number 10211

Signed [signature] Date 5/5/05

ORIGINAL & FIRST COPY-WATER RESOURCES DEPARTMENT SECOND COPY-CONSTRUCTOR THIRD COPY-CUSTOMER

RECEIVED
MAY 06 2005
WATER RESOURCES DEPT
SALEM, OREGON

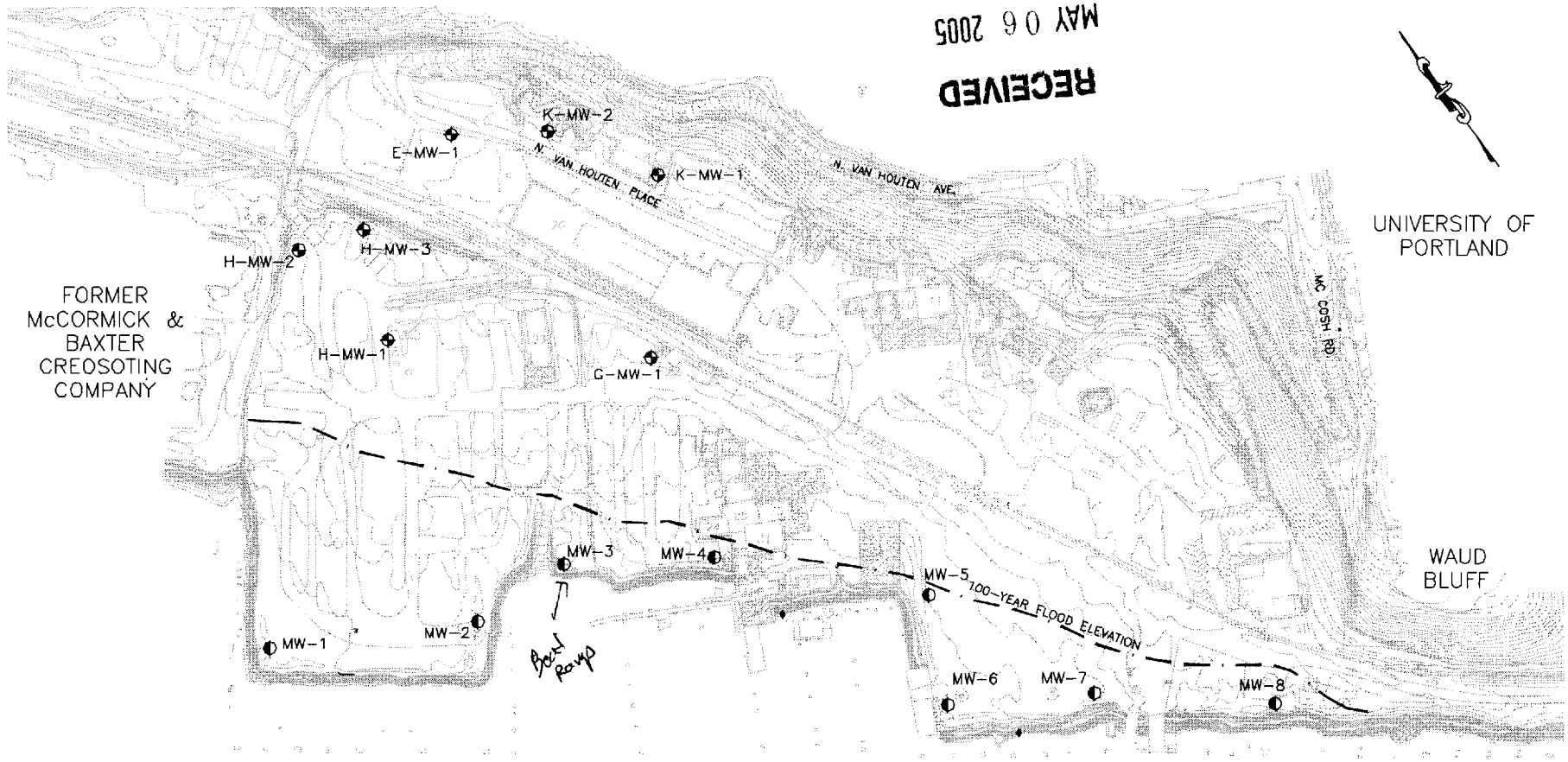

NOTES:

E-MW-1 EXISTING MONITORING WELLS

MW-4 PROPOSED MONITORING WELLS

0 200 400
SCALE IN FEET

SOURCE: BASE MAP PREPARED BY MAUL, FOSTER, AND ALONGI, MAP DATED 09.08.2004

geology and environment, inc.
International Specialists in the Environment
Portland, Oregon

DESIGNED BY:
CHECKED BY:
DRAWN BY: AJF

FIGURE 2
EXISTING AND PROPOSED MONITORING WELL LOCATION MAP
TRIANGLE PARK, L.L.C.
PORTLAND, OREGON

SCALE: NTS
DATE: 9-30-04

MULT 76711

MULT 76713

STATE OF OREGON

MONITORING WELL REPORT

(as required by ORS 537.765 & OAR 690-240-095)

Instructions for completing this report are on the last page of this form.

L73334

Start Card # 173346

(1) OWNER/PROJECT: WELL NO. MW-8

Name Triangle Park LLC

Address 3131 Moody Ave

City Portland State OR Zip 97239

(2) TYPE OF WORK:

[X] New construction [ ] Alteration (Repair/Recondition)

[ ] Conversion [ ] Deepening [ ] Abandonment

(3) DRILLING METHOD

[ ] Rotary Air [ ] Rotary Mud [ ] Cable

[ ] Hollow Stem Auger [X] Other Push Probe

(4) BORE HOLE CONSTRUCTION

Special Standards Yes [ ] No [X] Depth of completed well 41 ft.

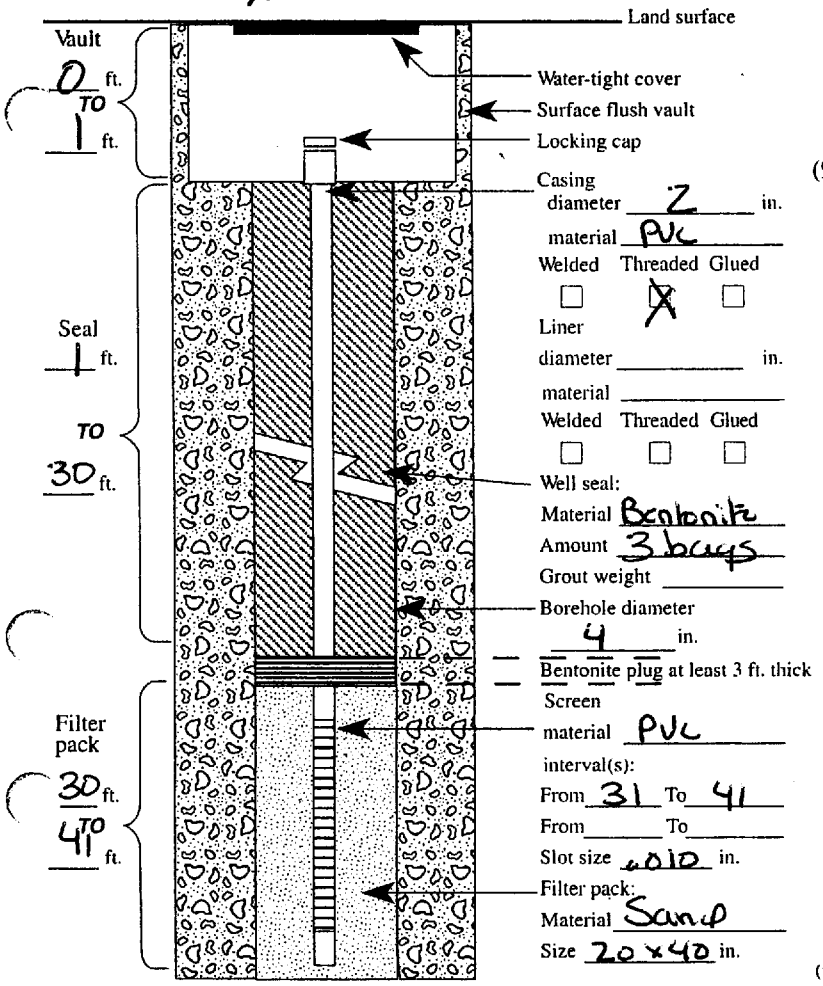

(5) WELL TEST:

[ ] Pump [ ] Bailer [ ] Air [ ] Flowing Artesian

Permeability Yield GPM

Conductivity PH

Temperature of water 54 °F/C Depth artesian flow found ft.

Was water analysis done? [ ] Yes [ ] No

By whom?

Depth of strata to be analyzed. From ft. to ft.

Remarks:

Name of supervising Geologist/Engineer

(6) LOCATION OF WELL By legal description

Well Location: County Multnomah

Township 1 (N or S) Range 1 (E or W) Section 7

1. NE 1/4 of NW 1/4 of above section.

2. Either Street address of well location 5828 N Van Houton Place

or Tax lot number of well location 100

3. ATTACH MAP WITH LOCATION IDENTIFIED. Map shall include approximate scale and north arrow.

(7) STATIC WATER LEVEL:

20.83 Ft. below land surface. Date 4/9/05

Artesian Pressure lb/sq. in. Date

(8) WATER BEARING ZONES:

Depth at which water was first found 20.83

From	To	Est. Flow Rate	SWL
20.83	41		20.83

(9) WELL LOG: Ground elevation

Material	From	To	SWL
Gravels	0	41	

RECEIVED
MAY 06 2005
WATER RESOURCES DEPT
SALEM, OREGON

Date started 4/9/05 Completed 4/9/05

(unbonded) Monitor Well Constructor Certification:

I certify that the work I performed on the construction, alteration, or abandonment of this well is in compliance with Oregon well construction standards. Materials used and information reported above are true to the best knowledge and belief.

MWC Number 10502

Signed Date 5/5/05

(bonded) Monitor Well Constructor Certification:

I accept responsibility for the construction, alteration, or abandonment work performed on this well during the construction dates reported above. All work performed during this time is in compliance with Oregon well construction standards. This report is true to the best of my knowledge and belief.

MWC Number 10211

Signed Date 5/5/05

ORIGINAL & FIRST COPY-WATER RESOURCES DEPARTMENT SECOND COPY-CONSTRUCTOR THIRD COPY-CUSTOMER

RECEIVED
MAY 06 2005
WATER RESOURCES DEPT
SALEM, OREGON

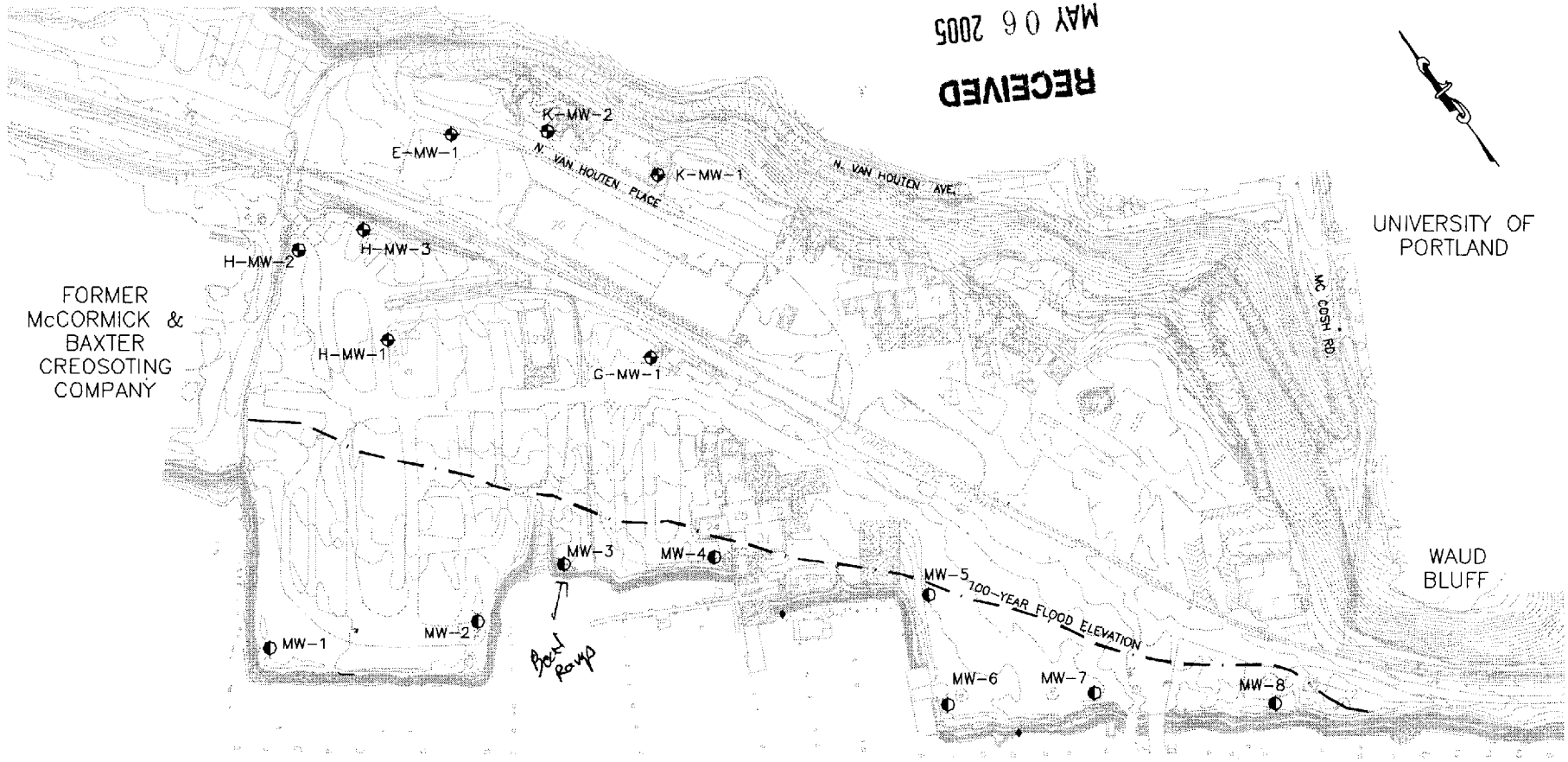

NOTES:

E-MW-1 EXISTING MONITORING WELLS

MW-4 PROPOSED MONITORING WELLS

0 200 400
SCALE IN FEET

SOURCE: BASE MAP PREPARED BY MAUL, FOSTER, AND ALONGI, MAP DATED 09.08.2004

geology and environment, inc.
International Specialists in the Environment
Portland, Oregon

DESIGNED BY:
CHECKED BY:
DRAWN BY: AJV

FIGURE 2
EXISTING AND PROPOSED MONITORING WELL LOCATION MAP
TRIANGLE PARK, L.L.C.
PORTLAND, OREGON

SCALE: NOTED
DATE REVISED: 9-20-04

MULT 76713

DEPTH (ft bgs)	GRAPHIC LOG	USCS SYMBOL	SOIL DESCRIPTION	SAMPLE	BLOW COUNT SPT N VALUE	VOLATILE READING (ppm)	GROUNDWATER	FIELD AND LABORATORY TESTING	WELL SCHEMATIC
0			SAND and GRAVEL with light vegetation.						Flush-mount Monument
		SP	Loose, dark brown, medium to coarse SAND with some gravel; dry.						Concrete; Granular Bentonite
5			Trace gravel.						Casing (Schedule 40 PVC, 1.0-inch I.D.)
			Medium to fine SAND from 8-9 feet below ground surface.						
			Medium to coarse SAND, trace gravel; dry.						10/20 Colorado Silica Sand
10									Well Screen (Schedule 40 PVC, 1.0-inch I.D. with 0.010-inch slots)
			Medium SAND from 12-13.5 feet below ground surface.						
			Dense, brown, medium to coarse SAND, trace gravel; dry.						
15									
			Gray, coarse SAND, trace gravel; wet.				▽		
20									
			Interbedded with medium SAND and trace silt and gravel.						
25									Slip End Cap
			Total depth = 25 feet below ground surface.						
30									
35									

BORING METHOD: Direct Push

BOREHOLE DIAMETER: 3 (in)

DRILL RIG: Power Probe

CONTRACTOR: ESN/Don & Mike

LOGGED BY: B. Lary

ELEVATION REFERENCE: NA

GROUND SURFACE ELEVATION: NA

CASING ELEVATION: NA

START CARD/TAG ID: NA

DRILLING DATES: 11/29/2005 - 11/29/2005

REMARKS:

LB0008839

Triangle Park

5-61M-114172

AMEC
7376 SW Durham Road
Portland, Oregon
USA 97224
Tel (503) 639-3400
Fax (503) 620-7892

amec

LOG OF BORING
MW-A4-1

ENVR+WELL BORING 5-61M-114172.GPJ AMEC PORTLAND.GDT 12/14/05

DEPTH (ft bgs)	GRAPHIC LOG	USCS SYMBOL	SOIL DESCRIPTION	SAMPLE	BLOW COUNT SPT N VALUE	VOLATILE READING (ppm)	GROUNDWATER	FIELD AND LABORATORY TESTING
0			GRAVEL.					
5			No sampling from 0-16 feet below ground surface.					
10								
15								
		SP	Dense, dark gray and green, fine to medium SAND with some silt and wood chunks, roots; moist. Petroleum-like odor and sheen.					
20			Less wood; wet. Petroleum-like odor and sheen.				▽	
25								
30			Total depth = 30 feet below ground surface.					
35								

WELL SCHEMATIC

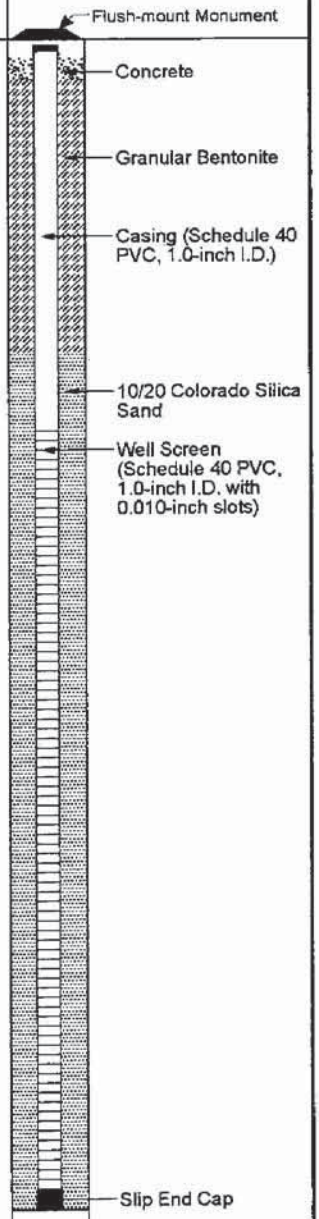

BORING METHOD: Direct Push
BOREHOLE DIAMETER: 3 (in)
DRILL RIG: Power Probe
CONTRACTOR: ESN/Don & Mike
LOGGED BY: B. Lary

ELEVATION REFERENCE: NA
GROUND SURFACE ELEVATION: NA
CASING ELEVATION: NA
START CARD/TAG ID: NA
DRILLING DATES: 11/30/2005 - 11/30/2005

REMARKS:

LB0008840

Triangle Park

5-61M-114172

AMEC
7376 SW Durham Road
Portland, Oregon
USA 97224
Tel (503) 639-3400
Fax (503) 620-7892

amec

LOG OF BORING MW-A4-2

ENVR+WELL BORING 5-61M-114172.GPJ AMEC PORTLAND.GDT 12/14/05

DEPTH (ft bgs)	GRAPHIC LOG	USCS SYMBOL	SOIL DESCRIPTION	SAMPLE	BLOW COUNT SPT N VALUE	VOLATILE READING (ppm)	GROUNDWATER	FIELD AND LABORATORY TESTING
0			Asphalt underlain by base coarse GRAVEL (FILL).					
		SM-SP	Loose to medium dense, brown, silty SAND to SAND with trace gravel; dry.					
		SM-SW	Black with thin white layer, sandy SILT with organics grading to gravelly SAND, charred; moist to wet.					
5		SP	Medium dense, brown, medium SAND with chunks of wood; moist to dry.					
10			Trace rounded gravel.					
			Medium SAND, less gravel.					
15			Small gravel layer.				▽	
		SP	Rusty brown to dark gray, medium to coarse SAND, trace gravel; wet.					
20			Dark gray, medium to coarse SAND, trace small gravel; wet.					
25			Total depth = 25 feet below ground surface.					
30								
35								

WELL SCHEMATIC

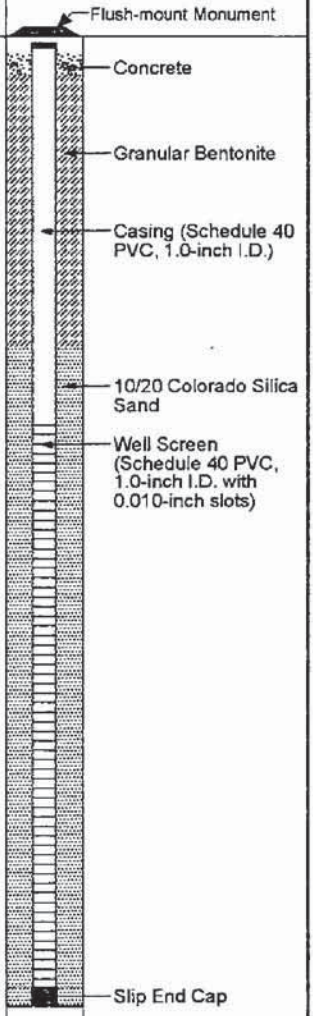

BORING METHOD: Direct Push
BOREHOLE DIAMETER: 3 (in)
DRILL RIG: Power Probe
CONTRACTOR: ESN/Don & Mike
LOGGED BY: B. Lary

ELEVATION REFERENCE: NA
GROUND SURFACE ELEVATION: NA
CASING ELEVATION: NA
START CARD/TAG ID: NA
DRILLING DATES: 11/29/2005 - 11/29/2005

REMARKS:

LB0008841

Triangle Park

5-61M-114172

AMEC
7376 SW Durham Road
Portland, Oregon
USA 97224
Tel (503) 639-3400
Fax (503) 620-7892

amec

LOG OF BORING MW-A2-3

ENVR+WELL BORING 5-61M-114172.GPJ AMEC PORTLAND.GDT 12/14/05

DEPTH (ft bgs)	GRAPHIC LOG	USCS SYMBOL	SOIL DESCRIPTION	SAMPLE	BLOW COUNT SPT N VALUE	VOLATILE READING (ppm)	GROUNDWATER	FIELD AND LABORATORY TESTING
0			GRAVEL and sparse vegetation.					
			Black, basalt GRAVEL (FILL); dry.					
			Concrete.					
		GP	Sandy GRAVEL (FILL); dry.					
			Dense, brown, sandy GRAVEL with trace silt; wet.					
5		SP-SM	Dense, brown, medium SAND with interbedded silt lenses (approximately 1-inch thick); dry to moist.					
		SP	Grades to fine to medium SAND with trace silt; dry.					
10			Dense, rusty brown, fine to medium SAND with trace silt and some small gravel; dry.					
15			Dense, gray, medium to coarse SAND, trace small gravel; moist to wet.					
20			Wet.				▽	
			Iridescent (contaminated) groundwater from 22-23 feet below ground surface.					
25								
30			Total depth = 30 feet below ground surface.					
35								

WELL SCHEMATIC

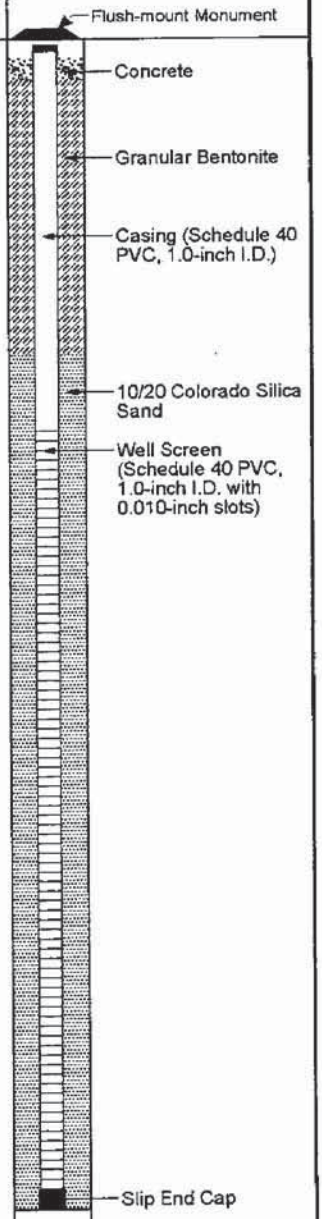

BORING METHOD: Direct Push
BOREHOLE DIAMETER: 3 (in)
DRILL RIG: Power Probe
CONTRACTOR: ESN/Don & Mike
LOGGED BY: B. Lary

ELEVATION REFERENCE: NA
GROUND SURFACE ELEVATION: NA
CASING ELEVATION: NA
START CARD/TAG ID: NA
DRILLING DATES: 11/30/2005 - 11/30/2005

REMARKS:

LB0008842

Triangle Park

5-61M-114172

AMEC
7376 SW Durham Road
Portland, Oregon
USA 97224
Tel (503) 639-3400
Fax (503) 620-7892

amec

LOG OF BORING MW-A3-4

ENVR+WELL BORING 5-61M-114172.GPJ AMEC PORTLAND.GDT 12/14/05

DEPTH (ft bgs)	GRAPHIC LOG	USCS SYMBOL	SOIL DESCRIPTION	SAMPLE	BLOW COUNT SPT N VALUE	VOLATILE READING (ppm)	GROUNDWATER	FIELD AND LABORATORY TESTING
0			GRAVEL with light vegetation.					
		GP	Brown, sandy GRAVEL (FILL); moist.					
			Dry.					
			White GRAVEL and ash-like material.					
5		GP	Brown, silty, sandy GRAVEL; wet.					
		SP	Dense, dark gray, medium SAND with trace gravel; dry.					
10			Gray to green-gray.					
			Slight petroleum-like odor (diesel?).					
15								
			Moist. Sheen on soil.					
20			Wet.				▽	
		SP-SM	Dense, dark gray, medium SAND with thin silt lenses; wet. Petroleum-like odor and sheen.					
25								
30			Total depth = 30 feet below ground surface.					
35								

WELL SCHEMATIC

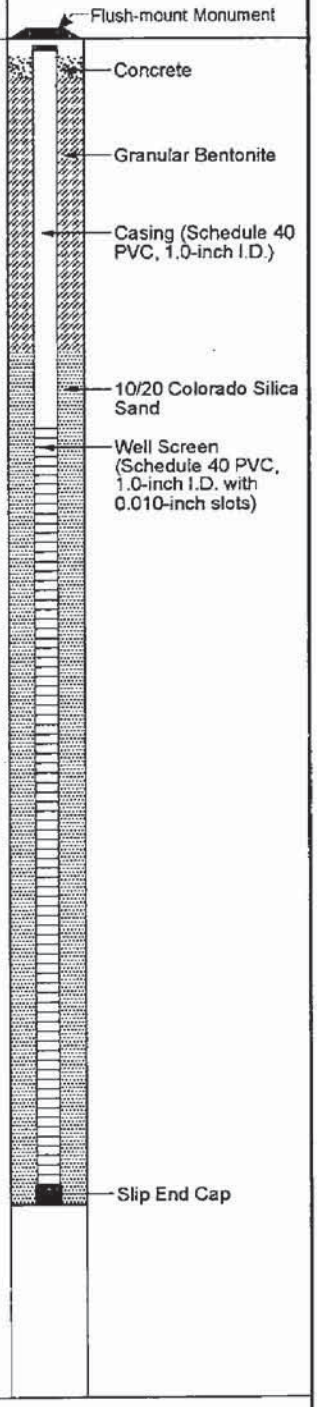

BORING METHOD: Direct Push
BOREHOLE DIAMETER: 3 (in)
DRILL RIG: Power Probe
CONTRACTOR: ESN/Don & Mike
LOGGED BY: B. Lary

ELEVATION REFERENCE: NA
GROUND SURFACE ELEVATION: NA
CASING ELEVATION: NA
START CARD/TAG ID: NA
DRILLING DATES: 11/30/2005 - 11/30/2005

REMARKS:

LB0008843

Triangle Park

5-61M-114172

AMEC
7376 SW Durham Road
Portland, Oregon
USA 97224
Tel (503) 639-3400
Fax (503) 620-7892

amec

LOG OF BORING MW-A3-5

ENVR+WELL BORING 5-61M-114172.GPJ AMEC PORTLAND.GDT 12/14/05

STATE OF OREGON
MONITORING WELL REPORT
(as required by ORS 537.765 & OAR 690-240-095)

Mult 3732

1N/1E/18da

Start Card # 59087

Instructions for completing this report are on the last page of this form.

(1) OWNER/PROJECT: WELL NO. 59087

Name Riedel International Inc

Address 5828 North Van Houten Place

City Portland State OR Zip 97203

(2) TYPE OF WORK:

- [x] New construction
- [ ] Alteration (Repair/deepening)
- [ ] Conversion
- [ ] Abandonment

(3) DRILLING METHOD

- [ ] Rotary Air
- [ ] Rotary Mud
- [ ] Cable
- [x] Hollow Stem Auger
- [ ] Other

(4) BORE HOLE CONSTRUCTION

Special Standards Yes [ ] No [x] Depth of completed well 30 ft.

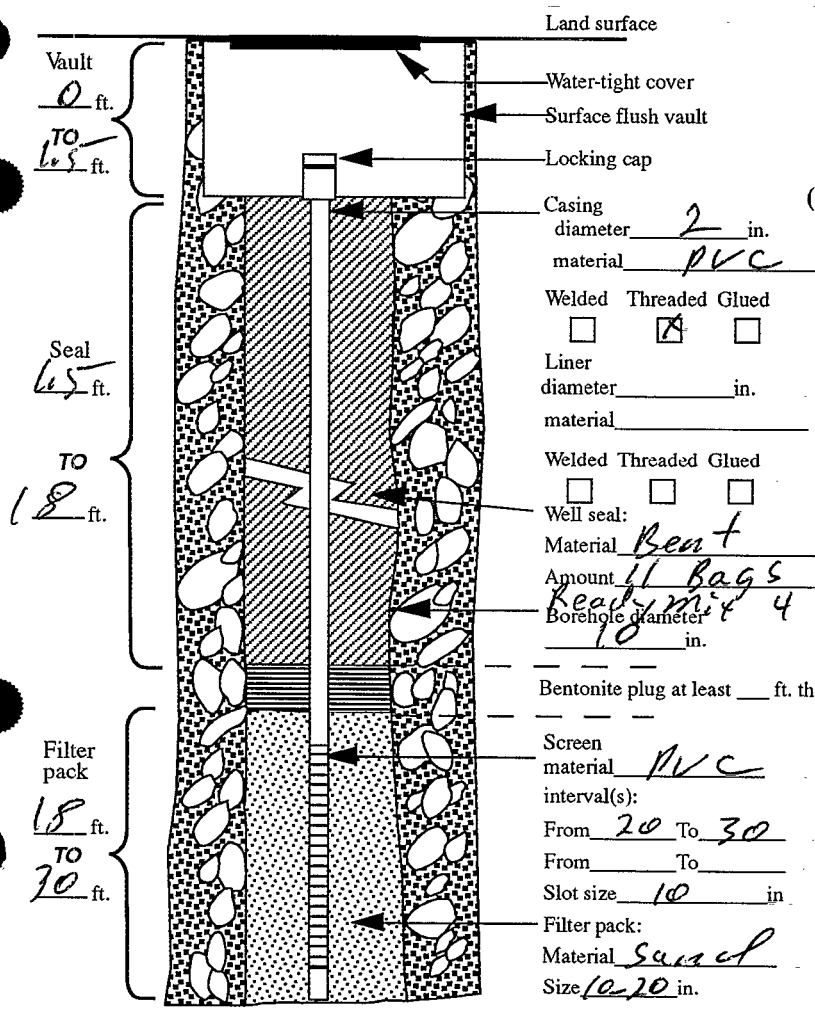

(5) WELL TEST:

- [ ] Pump
- [ ] Bailer
- [ ] Air
- [ ] Flowing Artesian

Permeability Yield GPM

Conductivity PH

Temperature of water 54 °F/C Depth artesian flow found ft.

Was water analysis done? [ ] Yes [x] No

By whom?

Depth of strata to be analyzed. From 20 ft. to 30 ft.

Remarks:

Name of supervising Geologist/Engineer

(6) LOCATION OF WELL By legal description

Well Location: County Mult

Township 1N (N or S) Range 1E (E or W) Section 18

1. NE 1/4 of SE 1/4 of above section.

2. Street address of well location Same

3. Tax lot number of well location 10

4. ATTACH MAP WITH LOCATION IDENTIFIED.

(7) STATIC WATER LEVEL:

24 Ft. below land surface. Date 9/23/93

Artesian Pressure lb/sq. in. Date

(8) WATER BEARING ZONES:

Depth at which water was first found 24

From	To	Est. Flow Rate	SWL

(9) WELL LOG: Ground elevation

Material	From	To	SWL
Fill clays	0	5	
Sand	5	20	
Hard gravels Sand	20	30	

RECEIVED
OCT 14 1993
WATER RESOURCES DEPT.
SALEM, OREGON

Date started 9/23 Completed 9/23

(unbonded) Monitor Well Constructor Certification:

I certify that the work I performed on the construction, alteration, or abandonment of this well is in compliance with Oregon well construction standards. Materials used and information reported above are true to the best knowledge and belief.

MWC Number 10027

Signed Wellein Colley Date 9/23/93

(bonded) Monitor Well Constructor Certification:

I accept responsibility for the construction, alteration, or abandonment work performed on this well during the construction dates reported above. All work performed during this time is in compliance with Oregon well construction standards. This report is true to the best of my knowledge and belief.

MWC Number 1001

Signed Date 10/14/93

ORIGINAL & FIRST COPY-WATER RESOURCES DEPARTMENT SECOND COPY-CONSTRUCTOR THIRD COPY-CUSTOMER

MULT 3732

SITE MAP

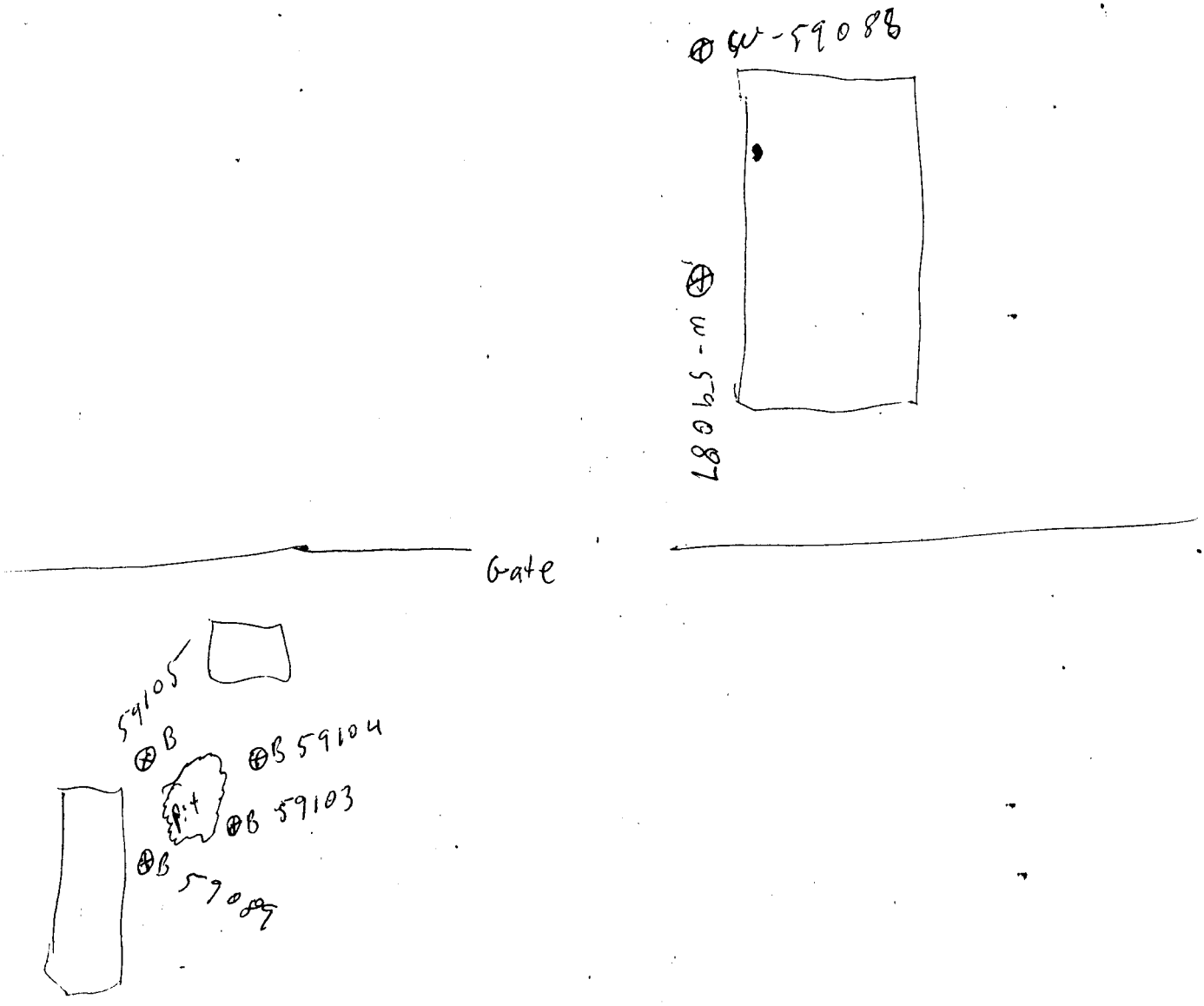

RECEIVED
OCT 14 1993
WATER RES
SALEM, OREGON

STATE OF OREGON
MONITORING WELL REPORT
(as required by ORS 537.765 & OAR 690-240-095)

MULT 3733

1N/1E/18 da

Start Card # 59088

Instructions for completing this report are on the last page of this form.

(1) OWNER/PROJECT: WELL NO. 59088

Name Riedel International Inc

Address 5828 North Van Houten place

City Portland State OR Zip 97203

(2) TYPE OF WORK:

- [X] New construction
- [ ] Alteration (Repair/deepening)
- [ ] Conversion
- [ ] Abandonment

(3) DRILLING METHOD

- [ ] Rotary Air
- [ ] Rotary Mud
- [ ] Cable
- [X] Hollow Stem Auger
- [ ] Other

(4) BORE HOLE CONSTRUCTION

Special Standards Yes [ ] No [X] Depth of completed well 30 ft.

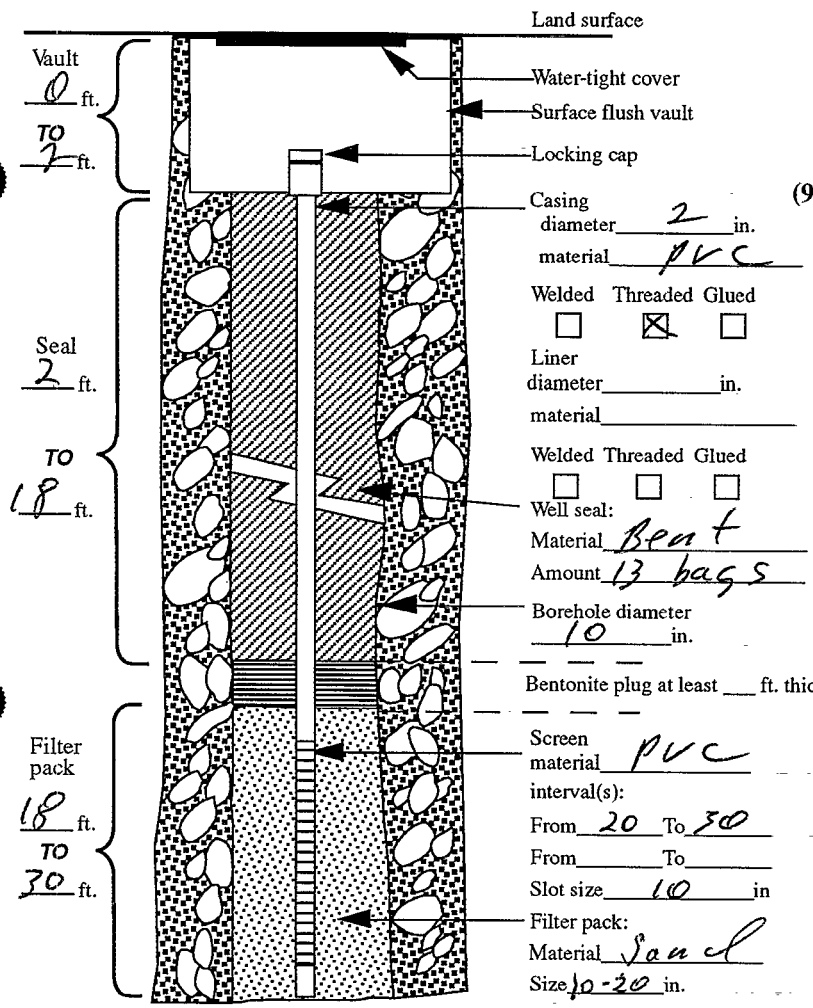

(5) WELL TEST:

- [ ] Pump
- [ ] Bailer
- [ ] Air
- [ ] Flowing Artesian

Permeability _____ Yield _____ GPM

Conductivity _____ PH _____

Temperature of water 54 °F/C Depth artesian flow found _____ ft.

Was water analysis done? [ ] Yes [X] No

By whom? _____

Depth of strata to be analyzed. From 20 ft. to 30 ft.

Remarks: _____

Name of supervising Geologist/Engineer _____

(6) LOCATION OF WELL By legal description

Well Location: County Mult

Township 1N (N or S) Range 1E (E or W) Section 18

1. NE 1/4 of SE 1/4 of above section.

2. Street address of well location Same

3. Tax lot number of well location 10

4. ATTACH MAP WITH LOCATION IDENTIFIED.

(7) STATIC WATER LEVEL:

23 Ft. below land surface. Date 9/23/93

Artesian Pressure _____ lb/sq. in. Date _____

(8) WATER BEARING ZONES:

Depth at which water was first found 23

From	To	Est. Flow Rate	SWL

(9) WELL LOG: Ground elevation _____

Material	From	To	SWL
Fill - gravels	0	5	
Sand	5	30	

RECEIVED
OCT 14 1993
WATER RESOURCES DEPT.
SALEM, OREGON

Date started 9/23 Completed 9/23

(unbonded) Monitor Well Constructor Certification:

I certify that the work I performed on the construction, alteration, or abandonment of this well is in compliance with Oregon well construction standards. Materials used and information reported above are true to the best knowledge and belief.

MWC Number 10027

Signed Willis Collins Date 9/23/93

(bonded) Monitor Well Constructor Certification:

I accept responsibility for the construction, alteration, or abandonment work performed on this well during the construction dates reported above. All work performed during this time is in compliance with Oregon well construction standards. This report is true to the best of my knowledge and belief.

MWC Number [illegible]

Signed [illegible] Date 10/11/93

ORIGINAL & FIRST COPY-WATER RESOURCES DEPARTMENT SECOND COPY-CONSTRUCTOR THIRD COPY-CUSTOMER

MULT 3733

SITE MAP

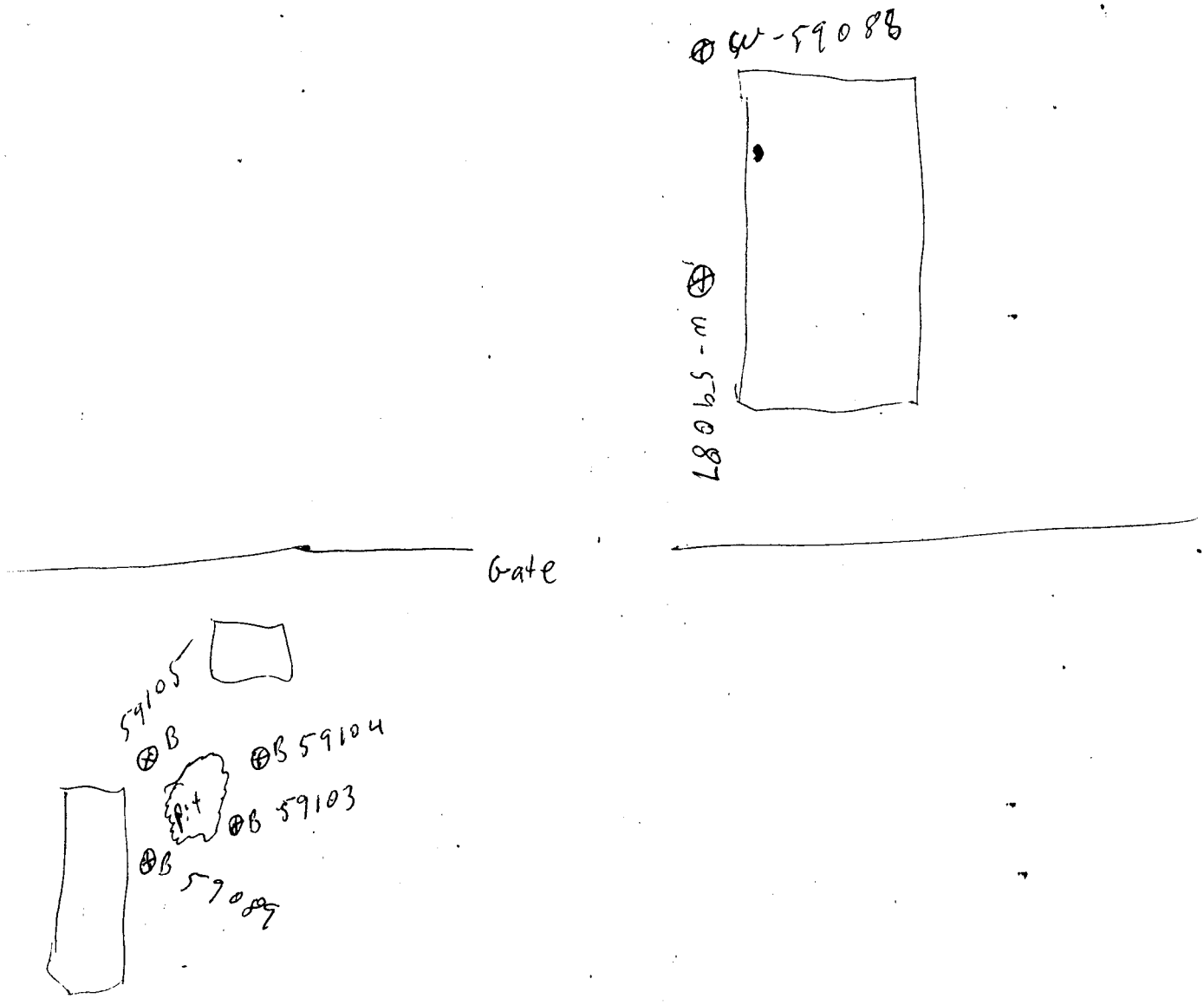

RECEIVED
OCT 14 1993
WATER RES
SALEM, OREGON