LWG
LOWER WILLAMETTE GROUP

PORTLAND HARBOR RI/FS

BACKGROUND DOCUMENT: APPLICATION OF OREGON WATER QUALITY STANDARDS

--FOR DISCUSSION

DRAFT

DO NOT QUOTE OR CITE
This document is for discussion purposes only and is subject to change in whole or part.

July 2, 2008

ISSUE FOR DISCUSSION:
APPLICATION OF OREGON WATER QUALITY STANDARDS

- We anticipate that, for certain Chemicals of Concern (COCs), Oregon's chronic water quality criteria for protection of freshwater aquatic life (Chronic WQC) will be identified as Preliminary Remediation Goals (PRGs).
    - Tab 1: Preliminary RAOs Identified in Programmatic Work Plan (PWP)

- EPA has suggestedthat these Chronic WQC may also be Applicable or Relevant and Appropriate Requirements (ARARs) or criteria that are To Be Considered (TBCs).
    - Tab 2: Identification of WQC as "potential ARARs" in PWP
    - Tab 3: Memorandum: Application of Water Quality Criteria as ARARs

- If these or any other Oregon WQC are identified as ARARs, EPA will need to determine whether conditions exist for an ARAR waiver (e.g., technical impracticability, equivalent standard of performance, inconsistent application of standard by State in similar circumstances, or alternative adopted on interim basis).
    - Tab 4: Memorandum: Waiver of ARARs
    - Tab 5: Hudson ARAR waiver

- We anticipate that Oregon WQCs for some COCs could ultimately be adopted as Action-Specific ARARs (e.g. applicable to a point source discharge, or applicable in the context of a Clean Water Act (CWA) section 401 certification to a dredge action). State WQCs have been adopted as PRGs or Action-Specific ARARs at other Superfund Sites in these specific contexts. However, there is very little precedence for EPA to adopt a State WQC as a stand-alone Cleanup Level at a sediment site. We are aware of that being done at only one other sediment site (where is it specifically subject to review for technical impracticability).
    - Tab 6: Memorandum: Use of State Water Quality Criteria in Development of RAOs, PRGs and ARARs in Superfund Site Records of Decision at Sediment Sites Analogous to Portland Harbor Superfund Site

- Whether adopted as a PRG, ARAR or Cleanup Level, if EPA were to apply an Oregon WQC, it would need to take into account how the State of Oregon applies its WQC. For example, application of the Chronic WQC by the State of Oregon includes the application of both temporal and spatial averaging. Specifically, Oregon applies the chronic WQC to the "average concentration for 96 hours (4 days). . . not to be exceeded more than once every three (3) years."[1] On the spatial scale, the chronic WQC are generally applied to waters outside of a designated mixing zone, which is

---

[1] Table 33a and 33B to OAR 340-041-0033(2).

designated in the NPDES permit in the case of a point source discharge or, in the case of a dredging operation, in the water quality certification.

- Tab 7: Memorandum: Oregon's Application of Its Water Quality Criteria
- Tab 8: DEQ Explanation of Regulatory Mixing Zones in NPDES Permits
- Tab 9: Example of Water Quality Certification

Tab 1
Preliminary RAOs Identified in Programmatic Work Plan (PWP)

Preliminary RAOs Identified in Programmatic Work Plan (PWP)

"The proposed Preliminary RAOs are:

"1. Reduce human health risks from direct contact with and incidental ingestion of chemicals of concern (COCs) in sediments in the Site to acceptable levels.

"2. Reduce COC concentrations in sediments in the Site to levels that will result in acceptable risks to humans that eat fish and shellfish from the Site.

"3. Reduce human health risks from direct contact with and incidental ingestion of COCs in water in the Site to acceptable levels.

"4. Reduce ecological risks from contact with and ingestion of COCs in sediments or prey in the Site to acceptable levels.

"5. Reduce ecological risks from contact with and ingestion of COCs in water in the Site to acceptable levels."

Remedial Action Objectives Technical Memorandum at 6, Attachment A1 to Portland Harbor RI/FS Programmatic Work Plan, Appendix A: Feasibility Study Work Plan, April 23, 2004.

Tab 2
Identification of WQC as "potential ARARs" in PWP

Identification of WQC as "potential ARARs" in PWP

Excerpt of Table 2 from Attachment A1 to Programmatic Work Plan, Remedial Action Objectives Memorandum, LWG, April 23, 2004.:

Potential ARAR	TBC	ARARs	Citation	Summary	Comment
		CLEAN WATER ACT	33 U.S.C. §§ 1251 et seq.		
x		Federal Water Quality Criteria	CWA §§303 and 304	Pursuant to CERCLA §121(d)(B)(i), otherwise non-enforceable water quality criteria, developed by EPA for surface water, are ARARS. Two kinds of water quality criteria have been developed: one for protection of human health, and another for protection of aquatic life. Includes establishment of TMDLs.	This requirement is potentially relevant to the determination of risks but should not over-ride any site-specific toxicity values or risks determined through the risk assessment process. It is also relevant to the identification of potential sources and the short-term and long-term effectiveness of remedial alternatives.
		[STATE] WATER QUALITY			
x		Statewide Water Quality Plan	OAR 340 Div. 41; OAR 340-041-0442	Designates beneficial uses for water bodies and water quality standards and criteria necessary to protect those uses. In particular, OAR 340-041-0442 provides the beneficial uses that shall be protected in the Willamette Basin. The Tables referenced therein provide for particular water quality criteria and standards.	This requirement is potentially relevant to the determination of risks but should not over-ride any site-specific toxicity values or risks determined through the risk assessment process. It is also relevant to the identification of potential sources and the short-term and long-term effectiveness of remedial alternatives. Where Federal and State water quality criteria differ, the most stringent criteria should be considered.

Tab 3
Memorandum: Application of Water Quality Criteria as ARARs

MEMORANDUM

June 6, 2007

TO: LWG EXECUTIVE COMMITTEE

FROM: LWG LEGAL COMMITTEE

RE: Application of Water Quality Criteria as ARARs

Appendix A to the Portland Harbor RI/FS Programmatic Workplan provided the Preliminary Identification of Potential State and Federal Applicable or Relevant and Appropriate Requirements ("ARARs") and To Be Considered Initiatives ("TBCs") for the Portland Harbor Superfund Site RI/FS. Among the identified potential ARARs were both federal and state water quality criteria. This memorandum discusses the potential application of both as ARARs or TBCs.

I. Federal Water Quality Criteria as ARARs

This section will address briefly the issue of federal Water Quality Criteria ("FWQC") as ARARs or TBCs. FWQC are non-enforceable guidelines set by EPA that are used by states in setting state water quality criteria. Generally, because FWQC are non-enforceable, they cannot be "legally applicable." They can, however, be "relevant and appropriate" under the same circumstances that state water quality criteria are relevant and appropriate. As CERCLA explains,

> "In determining whether or not any water quality criteria under the Clean Water Act [33 U.S.C.A. § 1251 et seq.] is relevant and appropriate under the circumstances of the release or threatened release, the President *shall consider the designated or potential use of the surface or groundwater, the environmental media affected, the purposes for which such criteria were developed, and the latest information available*." 42 U.S.C. §9621(d)(2)(B)(i) (emphasis added); *see also* 40 C.F.R. § 300.5.

Thus, whether a particular FWPC gets applied as an ARAR or TBC in Portland Harbor requires consideration of the designated uses of the Willamette River, the media affected (i.e., whether it is the surface water), the particular purposes for which that FWPC was developed, and the latest

information (which presumptively could include information developed in the Portland Harbor risk assessment).

An applicable state water quality criteria will generally trump a FWQC:

> "If a state has promulgated a numerical [water quality standard, or "WQS"] that applies to the contaminant and the designated use of the surface water at a site, the WQS will generally be applicable or relevant and appropriate for determining cleanup levels, rather than FWQC. A WQS represents a determination by the State, based on the FWQC, of the level of contaminant which is protective in that surface water body, a determination subject to EPA approval." 53 F.R. 51394, 51442 (Dec. 21, 1988).

In the specific context of the Oregon numeric water quality criteria, Oregon is still awaiting EPA approval of water quality criteria revisions adopted in May 2004, as revisions to the old Table 20 Oregon water quality criteria. Oregon's current enforceable water quality criteria are those in Table 20 and in newly adopted Table 33A. Once approved, Table 33B will replace Table 20.

II. Oregon Water Quality Criteria as ARARs

Oregon water quality criteria ("WQC") will be treated as ARARs to at least some extent at the Portland Harbor Superfund Site. CERCLA mandates that state WQC be treated as ARARs if they relate to a "hazardous substance, pollutant or contaminant that will remain onsite," are duly promulgated, are more stringent than FWQC, were identified no later than the early stages of comparative analysis of the feasibility study, and are "legally applicable to the hazardous substance or pollutant or contaminant concerned or [are] relevant and appropriate under the circumstances of the release or threatened release." 42 U.S.C. § 9621(d)(2)(A) and 40 C.F.R. § 300.400(e)(9)(i).

As the above-quoted language sets out, there are two ways by which a state criteria becomes an ARAR, if it is :

> (1) "*legally applicable* to the hazardous substance concerned," 42 U.S.C. § 9621(d)(2)(A), where "applicable" means "those . . . criteria . . . that specifically address a hazardous substance . . . or other circumstance found at a CERCLA site," 40 C.F.R. § 300.5; *or*
>
> (2) "*relevant and appropriate* under the circumstances of the release," where "relevant and appropriate" means "those . . . criteria . . . that, while not 'applicable' to a hazardous substance, . . . or other circumstance at a CERCLA site, address problems or situations sufficiently similar to those encountered at the CERCLA site that their use is well suited to the particular site." 40 C.F.R. § 300.5.

With respect to the latter,

"[i]n determining whether or not any water quality criteria under the Clean Water Act is relevant and appropriate under the circumstances of the release . . ., [EPA] shall consider the designated or potential use of the surface or groundwater, the environmental media affected, the purposes for which such criteria were developed, and the latest information available." 42 U.S.C. § 9621(d)(2)(B)(i).

EPA rules clarify that "relevant and appropriate" means "those . . . criteria . . . that, while not 'applicable' to a hazardous substance, pollutant, contaminant, remedial action, location, or other circumstance at a CERCLA site, address problems or situations sufficiently similar to those encountered at the CERCLA site that their use is well suited to the particular site." 40 C.F.R. § 300.5. EPA's rules also provide guidance on determining whether a criterion is relevant and appropriate:

> "In evaluating relevance and appropriateness, the [following] factors shall be examined, where pertinent, to determine whether a requirement addresses problems or situations sufficiently similar to the circumstances of the release or remedial action contemplated, and whether the requirement is well-suited to the site, and therefore is both relevant and appropriate. The pertinence of each of the following factors will depend, in part, on whether a requirement addresses a chemical, location or action. The following comparisons shall be made, where pertinent, to determine relevance and appropriateness:
>
> (i) The purpose of the requirement and the purpose of the CERCLA action;
>
> (ii) The medium regulated of affected by the requirement and the medium contaminated or affected at the CERCLA site;
>
> * * * *
>
> (iv) The actions or activities regulated by the requirement and the remedial action contemplated at the CERCLA site;
>
> * * *
>
> (viii) Any consideration of use or potential use of affected resources in the requirement and the use or potential use of the affected resource at the CERCLA site." 40 CFR 300.400(g)(2).

EPA guidance explains that both the "relevant" and "appropriate" elements need to be met:

> "[A] requirement may be 'relevant,' in that it covers situations similar to that at the site, but may not be 'appropriate' to apply for various reasons and, therefore, not well suited to the site. In some

> situations, only portions of a requirement or regulation may be judged relevant and appropriate." *ARARs Q's & A's: General Policy, RCRA, CWA, SDWA, Post-ROD Information, and Contingent Waivers*, OSWER Publication 9234.2-01/FS-A (July 1991).

WQC will clearly be "legally applicable" to any aspect of any Portland Harbor remedial action that results in a point source discharge that would otherwise require an NPDES permit. In that circumstance, the WQC would be applicable because the criteria are currently already used by the state to "specifically address [that] circumstance."[1]

Similarly, where a Portland Harbor remedy requires dredging, the substantive requirements of the Clean Water Act section 404 permitting process and section 401 certification will apply. See, e.g. EPA Bunker Hill Mining & Metallurgical Complex OU 03 09/12/2002 ("Turbidity standards for protection of aquatic life (cold water biota) are also applicable *** Short-term exemptions allow exceedances (e.g. dredge and fill activities)."); EPA ROD Pacific Sound Resources, Seattle, Washington (PSR) 09/30/99 ("[federal and state] acute marine criteria are anticipated to be relevant and appropriate requirements for discharge to marine surface water during cap placement and sediment dredging"; "Section 401 requires certification for activities conducted under 404 authorities. The substantive requirements of a certification determination are applicable.")

WQC could also conceivably be "relevant and appropriate" ARARs if they "address problems or situations sufficiently similar to those encountered at the CERCLA site that their use is well suited to the particular site." A possible application of this could be the Oregon chronic WQC for Chemicals of Concern at the Site. In the Programmatic Work Plan, one identified Remedial Action Objective was to "reduce ecological risks from contact with and ingestion of COCs in water in the Site to acceptable levels." *Remedial Action Objectives Technical Memorandum at 6,*

---

[1] EPA New Bedford OU 01 ROD, 09/25/98 ("As an action-specific standard, effluent discharged from the water treatment plants will meet the water quality standards for cadmium, chromium and lead"); EPA Bunker Hill Mining & Metallurgical Complex OU 03 09/12/2002 ("[federal WQC for cadmium] are relevant and appropriate to point source discharges to surface water, where those point sources are established as part of the selected remedial action;" "the Idaho water quality standards (WQS) *** are applicable to point source discharges to Idaho surface water, where those point sources are established as part of the selected remedial action"; and "Washington's toxics standards for protection of aquatic life *** are applicable to point source discharges to surface water in Washington State."); EPA ROD Pacific Sound Resources, Seattle, Washington (PSR) 09/30/99 ("requirements for the use of all known, available and reasonable technologies for treating wastewater prior to discharge to state waters are applicable to any dewatering of marine sediment prior to upland disposal" and "[Washington state NPDES permit substantive requirements] are applicable to discharges to surface waters resulting from sediment dewatering operations during dredging/disposal work."); EPA Commencement Bay, Near Shore/Tide Flats OU 21 12/31/90 (discussing WQC only in the context of discharges to surface waters of the state through diversion of stormwater from the remedial action areas).

Attachment A1 to Portland Harbor RI/FS Programmatic Work Plan, Appendix A: Feasibility Study Work Plan, April 23, 2004.

In each of these circumstances, however, the WQC need to be applied as they would be by the State of Oregon in the specific (i.e. "legally applicable") or similar (i.e. "relevant and appropriate") circumstance.

Tab 4
Memorandum: Waiver of ARARs

MEMORANDUM

June 6, 2007

TO: LWG EXECUTIVE COMMITTEE

FROM: LWG LEGAL COMMITTEE

RE: Waiver of ARARs

CERCLA section 121 allows EPA to waive ARARs in certain situations, including when:

(1) "the remedial action selected is only part of a total remedial action that will attain such level or standard of control when completed;"

(2) "compliance with such requirement at that facility will result in greater risk to human health and the environment than alternative options;"

(3) "compliance with such requirements is technically impracticable from an engineering perspective;"

(4) "the remedial action selected will attain a standard of performance that is equivalent to that required under the otherwise applicable standard, requirement, criteria, or limitation, through use of another method or approach;" [or]

(5) "[the] State has not consistently applied (or demonstrated the intention to consistently apply) the standard, requirement, criteria, or limitation in similar circumstances at other remedial actions within the State;"

*****

"[EPA] shall publish such findings, together with an explanation and appropriate documentation." 42 U.S.C. § 9621(d)(4)(A)-(F).

Because this standard addresses technical impracticability ("from an engineering perspective"), EPA has suggested that cost is a factor in determining whether an ARAR should be waived. 53 F.R. 51394, 51439 (Dec. 21, 1988).

Tab 5
ARAR Waiver--Hudson

Hudson River PCBs Site
New York

Record of Decision

Goal for ecological exposure. The selected remedy is therefore protective of the piscivorous or semi-piscivorous birds such as the belted kingfisher, great blue heron and bald eagle, and the piscivorous or semi-piscivorous mammals, such as the river otter and mink, which are the ecological receptors at greatest risk at the Site. By removing PCBs from the Upper Hudson River, the selected remedy also is protective of piscivorous fish, such as the largemouth bass and striped bass, omnivorous fish, such as the brown bullhead, insectivorous birds, such as the tree swallow, insectivorous mammals, such as the little brown bat, and omnivorous mammals, such as the raccoon, which also are at risk at the Site.

By greatly reducing the mass of PCBs in the sediments and lowering the average concentrations of PCBs in surface sediments, the selected remedy will also reduce the long-term transport of PCBs from each River Section to the next and from the Upper Hudson River to the Lower Hudson River.

14.2 Compliance with ARARs

The selected remedy will comply with the location-specific and action-specific ARARs identified, as well as four of the seven chemical-specific ARARs for the Site. However, although the selected remedy will approach some of these numbers, three of the chemical-specific ARARs are not expected to be met because the PCB contamination entering the Upper Hudson River from above Rogers Island (even after source control near the GE Hudson Falls plant) will likely exceed those ARARs. Therefore, because of technical impracticability, three chemical-specific ARARs pertaining to water column concentrations (1 ng/L total PCBs federal Ambient Water Quality Criterion; 0.12 ng/L total PCBs New York State standard for protection of wildlife; and, 0.001 ng/L total PCBs New York State standard for protection of human consumers of fish) are hereby waived (CERCLA Section 121(d)(4)(c) and 40 CFR 300.430(f)(1)(ii)(C)(3)). Even the most aggressive removal alternative, REM-0/0/3, would require these same waivers. Even with the technical impracticability waivers, the selected remedy is protective of human health and the environment.

The ARARs for the selected remedy are provided in Tables 14-1 through 14-3. The TBCs are provided in Tables 14-4 and 14-5.

14.3 Cost-Effectiveness

The cost of the selected remedy, REM-3/10/Select, is proportional to its overall effectiveness. The selected remedy's overall effectiveness is determined based on a consideration of its long-term effectiveness and permanence (Section 11.3, above), reduction in toxicity, mobility or volume through treatment (Section 11.4, above); and short-term effectiveness (Section 11.5, above).

Tab 6
Memorandum: Use of State Water Quality Criteria in Development of RAOs, PRGs and ARARs in Superfund Site Records of Decision at Sediment Sites Analogous to Portland Harbor Superfund Site

MEMORANDUM

March 12, 2008

TO: LWG EXECUTIVE COMMITTEE

FROM: LWG LEGAL COMMITTEE

RE: Use of State Water Quality Criteria in Development of RAOs, PRGs and ARARs in Superfund Site Records of Decision at Sediment Sites Analogous to Portland Harbor Superfund Site

---

This memorandum presents a general discussion of how remedial action objectives ("RAOs"), applicable or relevant and appropriate requirements ("ARARs"), and preliminary remediation goals ("PRGs") are developed for Superfund sites, and how each relates to the other in finalizing a remedy for a Superfund site. This memorandum presents these concepts as they are identified in the National Contingency Plan ("NCP") and the Comprehensive Environmental Response, Compensation and Liability Act ("CERCLA"), discussed further in EPA guidance materials, and implemented at Superfund sites.

This memorandum also presents a review of Records of Decision ("RODs") (or similar remedy decision documents) from Superfund sediment sites that are potentially analogous to the Portland Harbor Superfund Site, to determine whether state Water Quality Criteria ("WQC") have been applied as Cleanup Levels that a potentially responsible party must achieve at sediment sites and, if so, how compliance with such WQC is measured. While the EPA has identified state WQCs as PRGs or *potential* ARARs at many sites, at only one site that was reviewed did EPA designate a WQC as a Cleanup Level, but EPA specifically noted that such designation was subject to an ARAR waiver in the event that achievement of the WQC was found to be technically infeasible.

I. Development and Identification of RAOs, PRGs and ARARs

The NCP and CERCLA set out the goals of cleanup activities at Superfund sites. In general terms, CERCLA requires a degree of cleanup achieved by remedial actions that assures the protection of human health and the environment, and the NCP sets out a remedy selection process to identify remedies that eliminate, reduce, or control risks to human health and the environment.[2] Both require identification of promulgated standards, requirements, criteria or limitations that are either legally applicable or relevant and appropriate to the particular hazardous substance in determining cleanup goals.

---

[2] 42 U.S.C. § 9621(d) (2008); 40 C.F.R. § 300.430(a)(1) (2008).

Remedial Action Objectives

Remedial Action Objectives (RAOs) are developed during the remedial investigation and feasibility study ("RI/FS") phase and are medium-specific or operable unit ("OU")-specific goals for protecting human health and the environment. RAOs specify the contaminant(s) of concern and the exposure route(s) and receptor(s). RAOs should be specific but not so specific so as to limit the range of alternatives that can be developed.[3] General response actions are then selected to address the RAOs for each media of concern. These actions are refined throughout the RI/FS phase and may be combined to form remedial alternatives.

Applicable or Relevant and Appropriate Requirements

The NCP defines applicable requirements as those cleanup standards or other substantive requirements (federal or state) that specifically address a component or circumstance of a Superfund site. To be applicable, therefore, a requirement must directly and fully address a CERCLA activity. Relevant and appropriate requirements are defined as those cleanup standards or other substantive requirements that, while not "applicable," address problems or situations sufficiently similar to those encountered at a Superfund site. Only those requirements that are both relevant and appropriate must be addressed. Ultimate discretion is vested in the remedial project manager or the on-site coordinator.[4]

ARARs are either chemical-, location-, or action-specific. Chemical-specific ARARs are usually numerical values that result from applying health-based or risk management-based numbers or methods to site-specific conditions, such as chemical-specific concentrations in a given medium, such as soils. Location-based ARARs are restrictions placed upon the concentration of hazardous substances solely because of their location, such as placement of dredged material into wetlands. Action-specific ARARs are technology-based or activity-based requirements based on the chosen action, such as placement of a cap over waste.[5]

Potential chemical-, location- and action-specific ARARs are identified during the RI/FS phase, and throughout this process the applicability and relevance and appropriateness of each ARAR continues to be evaluated. Upon completion of the RI/FS, the EPA remedial project manager or on-site coordinator will then begin a detailed analysis of alternatives, which involves identifying preferred remedial alternatives, and documenting and justifying those ARARs which will be waived. The final remedy, as well as final ARARs, are documented in the ROD. On-site remedial actions selected in a ROD must attain those ARARs that are identified in the ROD or provide grounds for invoking an ARAR waiver.[6] An ARAR waiver for a selected remedial alternative may be raised only under certain circumstances, including technical impracticability,

---

[3] See EPA, Guidance for Conducting Remedial Investigations and Feasibility Studies under CERCLA, OSWER Dir. No. 9355.3-01 at §§ 4.1.2.1, 4.2.1 (Oct. 1988).
[4] 40 C.F.R. § 300.5. See also EPA, Introduction to Applicable or Relevant and Appropriate Requirements, OSWER Dir. No. 9205.5-10A at 4-5 (June 1998).
[5] See EPA, Risk Assessment Guidance for Superfund: Volume I -- Human Health Evaluation Manual (Part B, Development of Risk-based Preliminary Remediation Goals), Pub. No. 9285.7-01B at § 2.4.1 (Dec. 1991).
[6] 40 C.F.R. § 300.430(f)(1)(ii)(B).

compliance with the requirement resulting in greater risk to human health and the environment than other alternatives, or the use of the alternative as an interim measure.[7]

Preliminary Remediation Goals and Selection of Final Cleanup Goals

PRGs may be developed on the basis of site-specific risk-related factors, other information such as reference doses ("Rfds"), and readily available information, such as chemical-specific potential ARARs that are appropriate under the site-specific conditions, when available. These PRGs are re-evaluated as site characterization data and information from the baseline risk assessment become available, and the final acceptable exposure levels should be determined on the basis of the results of the baseline risk assessment and the evaluation of the expected exposures and associated risks for each alternative.[8] In development of PRGs, the following site-specific data must be identified: media of potential concern; chemicals of potential concern; and probable future land use. Once these factors are known, all potential ARARs are then identified.[9] Final cleanup levels may differ from PRGs because risk managers may consider details of the site-specific exposure, uncertainties in the risk estimate, and implementation issues such as the technical feasibility of achieving the PRG.[10]

As stated above, evaluation of PRGs involves assessment of ARARs, identified during the RI/FS phase. For surface water, state WQC are commonly considered potential ARARs because they are readily identifiable, although they are generally applied only as action-specific ARARs to point-source discharges from remedial activities, as discussed below, such as dewatering of contaminated sediments or treatment of impacted water prior to discharge.[11] As identified in the table and discussion below, however, application of state WQC as chemical-specific ARARs to impacted surface waters outside the action-specific context is very rare where the source of the impact to the water is identifiable, such as impacted sediments.

II. Identification of WQC as ARARs at Superfund Sites and Development of PRGs

Generally, as required by the NCP and CERCLA, the decision documents evaluated at the Superfund sites identified below (RI/FS reports and/or RODs) include, in their discussion of ARARs, all regulations that would be applicable to the media and contaminants of concern ("COC"). Therefore, at those sites that involve contaminated river or lake surface water, EPA generally identified the state's WQC as potential ARARs. However, as encouraged by EPA guidance materials which state that development of PRGs is an iterative process, EPA further identified at each site the specific risk posed by each COC through either a site-specific feasibility study or human health or ecological risk assessments ("HHRA" and "ERA," respectively). These reports identified the COCs and the levels at which they are present in site media, their toxicity values, the receptor pathways, and likely exposure routes and populations.

---

[7] 40 C.F.R. § 300.430(f)(1)(ii)(C).

[8] See supra note 4 at § 1.2; see also supra note 2 at § 4.1.2.1.

[9] See supra note 4 at §§ 1.4, 2.4.

[10] See supra note 4; see also EPA, Risk Assessment Guidance for Superfund: Volume I, Part A – Process for Conducting Probabilistic Risk Assessment, OSWER Dir. No. 9285.7-45 at § 5.0 (Dec. 2001).

[11] See EPA, CERCLA Compliance with Other Laws Manual, Part I, OSWER Dir. No. 9234.1 at § 3.2.3.3 (Aug. 1988); see also supra note 3 at 14-15 (identifying the most common application of Clean Water Act regulations to be ARARs as direct discharges to surface waters, indirect discharges to publicly-owned treatment works, and discharges of dredge-and-fill materials into U.S. waters).

PRGs that came out of this process for the sites that were evaluated were primarily derived on a site-specific basis, and not tied to WQC (see discussion of individual sites, below). The primary exposure pathways identified were dermal contact, incidental ingestion and fish consumption, and the primary media of concern for which cleanup goals were developed were river or lake sediments, as the source of surface water impacts.

A. Summary of ROD Information

Summarizing the information on each site that is presented in detail below, it is clear that EPA has broad discretion in developing the PRGs that are appropriate for each site, and typically applies an iterative process, focusing on site-specific risk analysis, to develop final cleanup levels. EPA's customary method of addressing impacted surface water at Superfund sites is to address the source of surface water impacts, generally sediment. At these sites, EPA overwhelmingly chose to develop site-specific, risk-based PRGs for sediments to address the prevalent exposure pathways of concern: fish consumption, dermal contact and incidental ingestion. These site-specific PRGs are sometimes screened against other screening levels such as those developed for other NPL sites and in other regions to demonstrate protectiveness, but remain site-specific.

At most of these sites, WQC were identified as potential ARARs. At several sites where remedial activities would generate point source discharges, EPA ultimately identified the relevant WQC as action-specific ARARs that would be applicable to the remedy (i.e., to a point-source discharge such as from treatment of water or dewatering of soils or sediments). EPA rarely discussed the application (or non-application) of WQC generally as potential final cleanup levels for surface water. In one circumstances where state WQC were considered as potential chemical-specific ARARs (the Hudson), EPA waived the WQC as technically impracticable. In several others where their application was considered, EPA determined that WQC were not appropriate for direct application, because the focus of the cleanup goal was on the sediment source, rather than the surface water. This was true even when a relevant exposure pathway was determined to be dermal contact or incidental ingestion.

Only one Superfund site evaluated has identified and continues to use a state WQC as a final Cleanup Level, the Lake Onondaga site in New York. However, continued application of the WQC for mercury in lake surface water is dependent on demonstration, through continued monitoring, that the surface water can meet the WQC. Otherwise a technical impracticability finding is anticipated.

A. Detailed Site Information

The sites for which decision documents were reviewed, and general summaries of each, are presented on the following table. A summary discussion of each site for which a ROD is available is provided after the table.

Site	Identification of State WQC as Potential ARAR?[12]	Specific Application of WQC as PRG / Cleanup Level for Surface Water?
Lower Duwamish, WA	Yes, Identified as chemical-specific in RI (no ROD)	No. Used Region 9 PRG/RBC for soils, Region 3 RBC for fish tissue.
Upper Columbia, WA	Not yet identified (no ROD)	No. Used Region 9 PRG for soils, sediment.
Bunker Hill, ID	Yes, Chemical-specific	Yes, but only to point source discharges from central treatment plant (CTP) and remedial activities.
Ashtabula, OH	Yes, Action-specific	Yes, but only to point source discharges from remedial activities. Cleanup goals developed through site-specific RA. EPA identified ingestion of sediments during direct contact with Fields Brook as the primary exposure pathway on which the development of cleanup goals was based, and that dermal absorption and inhalation of vapors were insignificant exposure pathways.
Fox River, WI	Yes, Chemical-specific	Yes, but only to point source discharges from remedial activities. Otherwise Remedial Action Levels (RALs) developed based on sediment quality thresholds derived in the RA. EPA identified sediment and fish tissue as the primary exposure pathways of concern in developing cleanup goals. Focusing on sediments, EPA determined in the ROD that using WQC to develop sediment RALs was not appropriate because calculating a site-specific sediment quality standard from an WQC using current scientific methods (e.g. equilibrium partitioning) is very uncertain.
Kalamazoo River, MI	Yes, Chemical-specific	Yes, but only to point source discharges from remedial activities. EPA identified fish consumption as the most relevant exposure pathway, and focused on PCB-impacted paper residual, soils, and sediments as a source control measure. Cleanup criteria were then developed for paper residual, soils and sediment and based on residential, commercial/industrial, terrestrial and fish consumption use, developed in ERA/HHRA.
Lake Hartwell, SC	Yes, Contaminant-specific	No, Food & Drug Administration tolerance level of 2 mg/kg of PCBs in edible fish tissue was identified as an ARAR. Cleanup goals were not developed for surface water. EPA identified fish consumption as relevant exposure pathway, and the relevant

[12] The table states whether the ARARs were designated as "chemical-specific" or "Action-specific," but use of these terminologies was not consistent between sites.

Site	Identification of State WQC as Potential ARAR?[12]	Specific Application of WQC as PRG / Cleanup Level for Surface Water?
		media of concern was lake sediment. Sediment cleanup goals were developed through an evaluation of available criteria and accepted techniques for calculating cleanup goals in sediments, namely: existing (published) criteria for PCBs in sediments; precedent from other NPL sites; and site-specific values calculated through equilibrium partitioning based on contaminant partitioning between sediment and sediment porewater, based on protection of aquatic life. Ultimately, 1 ppm selected due to its prevalence at other NPL sites.
Snow Creek – Anniston, AL	Not yet identified (no ROD)	No. HHRA/ROD not yet completed. Consent Decree defines "cleaned up" as achieving 1 ppm PCBs in soils.
Kanawha River – Nitro, WV	Not yet identified (no ROD)	No. TMDL developed for dioxin levels in surface water. Potential dioxin sources, including sediment, were evaluated as part of TMDL development.
Housatonic, MA	Not yet identified (no ROD)	No. Cleanup goal set at 1 ppm for brook sediments; 10 ppm/15 ppm in top 1 ft/1-3 ft lake sediments, respectively.
Hudson River, NY	Yes, Chemical-specific	No. WQC ARAR waived due to technical impracticability. PRGs only identified for fish tissue, and limited by upstream sources of PCBs. EPA identified fish consumption as the relevant exposure pathway and sediment as the relevant media. A risk-based PRG was developed for fish tissue based on fish consumption by adults. No ARARs or cleanup goals were identified for river sediments.
New Bedford Harbor, MA	Yes, Action-specific and Chemical-specific	Yes, but only applicable to discharge from treatment plants. PCB levels to be decreased to background through phased TMDL approach. PRGs developed for fish tissue, Target Cleanup Levels developed for sediment. EPA determined the relevant exposure pathways to be fish consumption, direct dermal contact with shoreline sediments, and incidental ingestion of shoreline sediments. Sediments were identified as the relevant media, and EPA stated that dredging and containment of contaminated sediment to target cleanup levels is expected to allow the water column to reach WQC within 10 years of dredging. WQC not identified as a cleanup goal for surface water, rather a "measurement of protectiveness" of the remedy.
Passaic River, NJ	No chemical-specific ARARs selected	No. Background concentrations selected as PRGs, with goal of identifying and addressing upstream sources to lower background levels.

Site	Identification of State WQC as Potential ARAR?[12]	Specific Application of WQC as PRG / Cleanup Level for Surface Water?
Tittabawassee River, MI	Not yet identified (no ROD)	No. Cleanup goals not yet developed.
Onondaga lake, NY	Yes, Chemical-specific	Yes, WQC identified as an ARAR, but potential need for ARAR waiver acknowledged.
Little Mississinewa River, IN	Yes, Chemical-specific	Yes, but only to point source discharges from remedial activities. EPA identified fish consumption and dermal contact as the significant exposure pathways and sediment and floodplain areas as the relevant media. Site-specific cleanup goals were developed from remedial action levels, which in turn were developed through the RA. EPA stated that calculating a site-specific sediment quality standard from a WQC using current scientific methods such as equilibrium partitioning is very uncertain.

The majority of sites at which EPA specifically applied WQC as an ARAR and final cleanup goal were sites where the application of the state WQC was to point-source discharges resulting from remedial actions, such as dewatering of excavated soils and sediments and treatment of impacted waters, not surface water quality resulting from impacted sediments. This demonstrates compliance with the substantive requirements of ARARs, such as applying the WQC to an NPDES permit (which permit is not required for on-site remedial actions). The only exception is Lake Onondaga, discussed below.

Additional detailed discussion on exposure pathways, relevant media and development of cleanup goals for certain sites for which RODS have been prepared is presented below.

Ashtabula, OH

The Fields Brook site in Ashtabula, Ohio involves PCB-contaminated sediments and soils from historical industrial activities in Fields Brook, which drains to the Ashtabula River and subsequently Lake Erie. In the ROD, EPA identified ingestion of sediments during direct contact with Fields Brook as the primary exposure pathway on which the development of cleanup levels was based. The EPA specifically found that dermal absorption and inhalation of vapors were insignificant exposure pathways. Cleanup goals for sediments were then developed for both residential and industrial (occupational) uses.

Fox River, WI

The Fox River site in Green Bay, Wisconsin involves PCB-contaminated sediments within the river. EPA identified sediment and fish tissue as the primary exposure pathways of concern in developing cleanup goals. Focusing on sediments, EPA determined in the ROD that using WQC to develop sediment Remedial Action Levels for sediments was not appropriate because calculating a site-specific sediment quality standard from an WQC using current scientific methods (e.g. equilibrium partitioning) is very uncertain. Instead, EPA developed site-specific risk-based remedial action levels based on the sediment quality thresholds developed in the risk assessment. The calculated time to achieve the desired results in the use of surface water and ingestion of fish were based off of the selected remedy of sediment dredging and off-site disposal. WQC were identified as criteria applicable to any point-source discharges from remedial activities.

Kalamazoo River, MI

The Allied Paper/Portage Creek/Kalamazoo River site in Kalamazoo, Michigan involves an 80-mile stretch of the Kalamazoo River, impacted by PCBs due to historic paper milling operations. In the ROD, EPA identified fish consumption as the most relevant exposure pathway, and focused on PCB-impacted paper residual, soils, and sediments as a source control measure. Cleanup criteria were then developed for paper residual, soils and sediment and based on residential, commercial/industrial, terrestrial and fish consumption use, based on the ERA/HHRA that were performed for the site.

WQC were identified as criteria applicable to point-source discharges from remedial activities.

Lake Hartwell, SC

The Sangamo Weston/Twelve-Mile/Hartwell PCB site in Pickens, South Carolina focused on PCB impacts to Lake Hartwell from historic industrial operations. The relevant exposure pathway identified by EPA in the ROD for Lake Hartwell was fish consumption, and the relevant media of concern was lake sediments. Sediment cleanup goals were developed through an evaluation of available criteria and accepted techniques for calculating cleanup goals in sediments, namely: existing (published) criteria for PCBs in sediments; precedent from other NPL sites; and site-specific values calculated through equilibrium partitioning based on contaminant partitioning between sediment and sediment porewater, based on protection of aquatic life. EPA ultimately chose a cleanup goal for PCBs in sediments of 1 ppm, based on the prevalence of its use at similar NPL PCB sites and due to its technical feasibility.

Hudson River, NY

The Hudson River site in New York encompasses a 200-mile stretch of the Hudson River and focuses on historic PCBs impacts from General Electric operations along the river. In the ROD, EPA identified fish consumption as the most important exposure pathway and sediment as the relevant media. A risk-based PRG was developed for fish tissue based on fish consumption by adults. The remedy involves dredging of PCB-impacted sediments based on a measured mass-per-unit-area of PCBs (rather than a specific concentration of PCBs). No ARARs or cleanup goals were identified for river sediments; EPA stated that the sediment cleanup is considered a means to the goal of protecting human health and the environment. WQC were waived as an ARAR due to technical impracticability, due to upstream sources of PCBs in the river.

New Bedford Harbor, MA

The New Bedford Harbor site in Massachusetts involves PCB contamination to the harbor covering at least six miles. EPA determined the relevant exposure pathways to be fish consumption, direct dermal contact with shoreline sediments, and incidental ingestion of shoreline sediments. Sediments were identified as the relevant media, and EPA stated that dredging and containment of contaminated sediment to target cleanup levels is expected to allow the water column to reach WQC within ten years of dredging. WQC was not identified as a cleanup goal for surface water, but rather as a "measurement of protectiveness" of the remedy. Sediment target cleanup levels were set at 10 ppm and 50 ppm for different areas of the harbor, with 1 ppm rejected because addressing (e.g. dredging or capping) all sediments at this level would result in destruction of large amounts of habitat. WQC were identified as criteria applicable to point-source discharges from remedial activities.

Little Mississinewa River, IN

The Little Mississinewa River site in Indiana is a Superfund Alternative Site that focuses on a 7-mile stretch of the Little Mississinewa River impacted by PCBs from historical industrial operations. In the ROD, EPA identified fish consumption and dermal contact as the significant exposure pathways and sediment and floodplain areas as the relevant media. Site-specific cleanup goals were developed from remedial action levels, which in turn were developed through the risk assessment. EPA used RAOs to establish specific site-based cleanup goals, and defined cleanup goals as area-wide average concentration of PCBs that must be achieved to achieve the RAOs. RALs were derived based on the cleanup goal, and were defined as the cleanup level throughout a given area that must be achieved to meet the cleanup goal. For example, the RAL for the top 12 inches of river sediment was set at 4.0 ppm, requiring all sediments that exceeded this level to be removed in order to achieve the cleanup goal of 1.0 ppm in river sediments. Further, while state WQC were identified as a preliminary RAO, the EPA stated that WQC were not appropriate for direct application in the Little Mississinewa River at this time as a cleanup goal for surface water because they couldn't be translated into a sediment cleanup goal. Specifically, EPA stated that calculating a site-specific sediment quality standard from an WQC using current scientific methods such as equilibrium partitioning is very uncertain. WQC were identified as criteria applicable to point-source discharges from remedial activities.

III. Application of WQC as a Final Cleanup Goal

Only one site reviewed, discussed below, identified a WQC as a final Cleanup Level for surface water (other than as applicable to remedial activities).

At the Onondaga Lake site in New York, the state WQC for mercury in surface water was identified as a PRG, "to the extent practicable." EPA designated the state WQC for mercury as an ARAR and the cleanup goal for surface water, which WQC is based on mercury bioaccumulation in fish and the associated risks to wildlife and humans from eating mercury-impacted fish. EPA's discussion on using the mercury WQC as a chemical-specific ARAR, however, acknowledged that achieving the WQC may be technically impracticable and therefore an ARAR waiver may be required.

This site was divided into several "subsites," each of which was designated to address specific sources of contaminant loading into the Lake. The remedial design / action at this site is still in progress, and is the responsibility of Honeywell, the County of Onondaga and the City of Syracuse. Specifically, the County and the City have historically discharged water from their treatment works and combined sewer overflows into the lake and have been required by the state and EPA to upgrade these systems. The County also runs an Ambient Monitoring Program ("AMP") to test for the presence of the different COCs in the lake. Sampling in the lake for mercury occurs four times per year, in April, June, September and October / November. One purpose of sampling at these intervals is to identify whether the change in water flow within the lake (i.e. thermally stratified as compared to fully mixed) impacts the levels of COCs. Samples are also taken at various depths. For mercury, four samples are taken per sampling event: at 3 meters and 18 meters below the surface, and at locations at the north end and south end

of the lake. The most recent AMP report states that mercury concentrations increase as the lake becomes fully mixed, are generally uniform through the water column, and continue to exceed the WQC.

The data gathered from the AMP is used to: evaluate whether the infrastructure improvements are allowing the County to meet the effluent limits; evaluate whether the controls on wastewater are sufficient to bring the lake, streams, and river into compliance with applicable standards; determine if additional measures are required to bring the surface waters into compliance with regulations, standards, guidance values, and criteria; and provide information on whether the lake and its watershed meet community goals for a rehabilitated ecosystem. The decision-making scheme that is represented in the AMP report states that, if WQC are not being met as monitoring continues, the state will first look to determine whether the cause is effluent issues or "other" issues. If effluent issues, the state will revise the draft effluent limits. If other issues, the state may consider whether a site-specific standard is more appropriate than the WQC.

Tab 7
Memorandum: Oregon's Application of Its Water Quality Criteria

Memorandum

July 2, 2008

TO: LWG Executive Committee
FROM: Michael Campbell
RE: Oregon's Application of Its Water Quality Standards

I. Overview of Clean Water Act (CWA) Requirements and Oregon Water Quality Criteria

If Oregon Water Quality Criteria (WQC) are applied as ARARs or TBCs in the Portland Harbor remedial action, they would need to be applied in the same way that they are applied by the State of Oregon in similar circumstances. The following analysis serves as a "primer" of how those WQC are applied in Oregon.

A. *State Obligations under the CWA*

The Clean Water Act (CWA) requires each State to adopt water quality standards. *See* 33 U.S.C. § 1313(c)(2). The CWA provides that the standards

> shall consist of the designated uses of the navigable waters involved and the water quality criteria for such waters based upon such uses. Such standards shall be such as to protect the public health or welfare, enhance the quality of water and serve the purposes of this chapter.[[13]] Such standards shall be established taking into consideration their use and value for public water supplies, propagation of fish and wildlife, recreational purposes, and agricultural, industrial, and other purposes, and also taking into consideration their use and value for navigation.

Id. at § 1313(c)(2)(A).

State water quality standards must be submitted to EPA for review and approval. *Id.* at § 1313(c)(2)(A), (3). If EPA disapproves a State's standard, and if the State does not revise its standard to meet EPA's objections, EPA must promulgate a water quality standard for the State. *Id.* at § 1313(c)(4). Any State water quality standard submitted to EPA before May 30, 2000 is the applicable water quality standard under the CWA unless EPA disapproves it and adopts a more stringent standard; any State water quality standard submitted to EPA on or after May 30, 2000 is not the applicable water quality standard under the CWA until EPA approves it. *See* 40 C.F.R. § 131.21(c).

[13] "This chapter" is the CWA.

B. *Oregon Statutory Provisions*

The Oregon Environmental Quality Commission (the EQC) is the governing body of the Oregon Department of Environmental Quality (DEQ). The EQC is authorized to implement the CWA in Oregon, *see* ORS 468B.035, and, in particular, is authorized to establish, by rule, "standards of quality and purity for the waters of the state in accordance with the public policy set forth in ORS 468B.015," *see* ORS 468B.048(1).

C. *Elements of Water Quality Standards*

Under the CWA and EPA's implementing rules, water quality standards include the following three components: (1) the designated uses of a State's "navigable waters," (2) water quality criteria to protect the designated uses, and (3) general policies that affect the application and implementation of the State's standards. Each of these components of Oregon's water quality standards, which are set forth in OAR chapter 340, division 041, are briefly described below and then discussed in more detail in subsequent sections of this memorandum.

1. *Designated Uses*

State water quality standards "must specify appropriate water uses to be achieved and protected" and "must take into consideration the use and value of water for public water supplies, protection and propagation of fish, shellfish and wildlife, recreation in and on the water, agricultural, industrial, and other purposes including navigation." 40 C.F.R. § 131.10(a).

Oregon's water quality standards include use designations for each of Oregon's river basins (as well as the Columbia and Snake Rivers), although, with a few important exceptions, the designations are the same from basin to basin. *See* OAR 340-041-0101 to -0340. The designations are generally broad categories of uses, such as "domestic water supply" ("with adequate pretreatment and natural quality that meets drinking water standards"), "fish and aquatic life," and "water contact recreation." *See, e.g.,* OAR 340-041-0340, table 340A (Willamette Basin). Specific salmonid fish uses, however, are designated for individual streams and stream segments. *See, e.g., id.*, figures 340A and 340B.

2. *Water Quality Criteria*

State water quality standards must include "water quality criteria that protect the designated use. Such criteria must be based on sound scientific rationale and must contain sufficient parameters or constituents to protect the designated use. For waters with multiple use designations, the criteria shall support the most sensitive use." 40 C.F.R. § 131.11(a). Pursuant to CWA section 304(a), 33 U.S.C. § 1314(a), EPA has adopted guideline water quality criteria, the FWQC, but a State is not required to adopt these criteria if it has a sound scientific basis for the protectiveness of different criteria, *see* 40 C.F.R. § 131.11(b)(1).

Water quality criteria may be expressed as numeric values for specific pollutants or characteristics or may be expressed more generally as "narrative criteria." States must adopt numeric criteria, however, for pollutants that EPA has listed as toxic and for which EPA has adopted guideline criteria. *See* 33 U.S.C. § 1313(c)(2)(B).

Oregon's water quality standards include numeric water quality criteria for more than 100 toxic pollutants, OAR 340-041-0033(2); bacteria, OAR 340-041-0009; dissolved oxygen, OAR 340-041-0016; pH, OAR 340-041-0021; temperature, OAR 340-041-0028; total dissolved gas, OAR 340-041-0031; and turbidity, OAR 340-041-0036. In addition, the standards include a number of more general, narrative criteria. *See, e.g.*, OAR 340-041-0007(12) ("The creation of tastes or odors or toxic or other conditions that are deleterious to fish or other aquatic life or affect the potability of drinking water or the palatability of fish or shellfish may not be allowed."); OAR 340-041-0033(1) ("Toxic substances may not be introduced above natural background levels in waters of the state in amounts, concentrations, or combinations that may be harmful, may chemically change to harmful forms in the environment, or may accumulate in sediments or bioaccumulate in aquatic life or wildlife to levels that adversely affect public health, safety, or welfare or aquatic life, wildlife, or other designated beneficial uses.").

3. *Implementation Provisions*

EPA's regulations provide that States "may, at their discretion, include in their State standards, policies generally affecting their application and implementation, such as mixing zones, low flows and variances. Such policies are subject to EPA review and approval." 40 C.F.R. § 131.13.

As the text of EPA's regulations make clear, these implementation policies are components of a State's water quality standards and are subject to EPA review and approval, just as are other components, such as designated uses and water quality criteria. For example, pursuant to a State mixing zone regulation approved by EPA, certain water quality criteria may be exceeded within a "mixing zone" defined in a waterbody. It would not be accurate, however, to say that water quality standards may be exceeded within the mixing zone because the mixing zone regulation itself is a component of those standards. Therefore, in this context, when considering whether water quality standards are met, one must consider the EPA-approved water quality criteria together with any EPA-approved mixing zone regulation or other implementation provisions.

Oregon's water quality standards include several EPA-approved implementation provisions, including provisions for mixing zones, OAR 340-041-0053; variances, OAR 340-041-0061(2); compliance schedules, OAR 340-041-0061(16); and automatic modification of water quality criteria to reflect natural conditions that do not meet otherwise applicable criteria, OAR 340-041-0007(2). In addition, the standards include several other post-2000 implementation provisions on which EPA has not yet taken action. See, e.g., OAR 340-041-0061(15) (application of certain water quality criteria to reservoirs). The more significant of Oregon's implementation provisions are discussed in section IV, below.

D. *Waterbodies to Which the Standards Apply*

This section discusses, in general terms, limits on the area within which Oregon water quality standards apply. These area limits can be classified as "geographic" (*i.e.*, application only to specific watersheds, waterbodies, segments of waterbodies, or types of waterbodies) or "physical" (*i.e.*, application only to a specific portion of a waterbody, such as the water column or the surface). Mixing zones are also a type of limit on the area within which water quality criteria apply, but they are discussed separately in section F.1 below.

1. *Geographic Scope*

As described in section IV.C.1, above, designated uses are stated as broad categories (*e.g.*, "aquatic life") and are generally similar throughout the state, although there is some variation from basin to basin. *See* OAR 340-041-0101 to -0340. The only designated uses that vary substantially from waterbody to waterbody (and even from stream segment to stream segment and from season to season) are salmonid fish uses, which are mapped in detail in the water quality standards. *See id.*, figures 130A to 340B, tables 101B to 250B.

In general, water quality criteria, too, apply throughout the state. Moreover, most of the criteria are not expressly linked to the protection of a specific designated use. *See, e.g.,* OAR 340-041-0036 (turbidity criteria). The principal exceptions are temperature and dissolved oxygen criteria, most of which apply only to specific designated fish uses. *See* OAR 340-041-0016, -0028. Other important exceptions are criteria that apply only to fresh, estuarine, or salt water, *see, e.g.*, OAR 340-041-0009(1) (bacteria); OAR 340-041-0021 (pH); OAR 340-041-0033(2), tables 20, 33A, 33B, 33C (toxics); and criteria that apply only to the protection of aquatic life or human health, *see, e.g.,* OAR 340-041-0033(2), tables 20, 33A, 33B, 33C (toxics).

In addition to these express limitations on the application of water quality criteria, DEQ has construed a water quality criterion not to apply if the designated uses that the criteria were intended to protect would not "naturally" be present in the waterbody, either because the waterbody itself was artificial and would not support the use, or because the natural conditions of a natural waterbody would not support the use. For example, a recent DEQ National Pollutant Discharge Elimination System (NPDES) permit decision concerned a cooling and stormwater discharge to a roadside drainage ditch, which flowed into a creek approximately 500 meters downstream from the permittee's outfall to the ditch. DEQ determined that water quality standards did not apply within the ditch because the ditch was an artificial roadside drainage ditch that contained no fish and that was ordinarily dry unless it was raining. Because of this finding, DEQ did not reach the issue of having to decide whether it would authorize a mixing zone in the ditch.[14] *See*

[14] The roadside ditch would likely fall within the definition of "waters of the state" in ORS 468B.005(10), "canals, . . . and all other bodies of surface . . . waters, natural or artificial." Although the flow within the ditch was intermittent, DEQ's decision not to apply water quality standards was based on the absence of beneficial uses, such as fish. DEQ did *not* conclude either that the ditch was not a "water of the State" or that water quality standards are inapplicable to all roadside ditches.

NPDES Permit No. 101489 at 3 (Permapost Products Incorporated) (Dec. 29, 2006); DEQ, *Memo to File—Response to Public Comments* at 1 (Permapost Products Incorporated) (Jan. 2, 2007).

Similarly, a recent DEQ decision to apply water temperature criteria to a hydroelectric project's canals, forebays, and tailraces was based on a determination that the trout the criteria were intended to protect had access to these waterbodies. *See* DEQ, *Evaluation Report and Findings Record, Prospect No. 1, 2, and 4 Hydroelectric Project* at 59, 61 (Mar. 8, 2007). Under OAR 340-041-0028(4)(c) and (5), the 18.0° C. temperature criterion applies to all streams identified in figure 271A as providing salmon and trout rearing and migration uses, as well as all tributaries of these streams. Figure 271A identified all streams (and, hence, also all tributaries) in the hydroelectric project's vicinity as providing salmon and trout rearing and migration uses. DEQ made its decision to apply the criterion to the project's canals, forebays, and tailraces on the basis of whether or not trout had access to these waterbodies, not on the basis of whether the waterbodies were identified in figure 271A or were tributaries of these waterbodies. This is a reasonable interpretation of the criteria because, if the beneficial use that the criteria are intended to protect is not present and has no access to the waterbody, the criteria serve no purpose.

2. *Physical Scope*

It is clear that the Division 41 water quality standards are intended to apply only to surface waters. First, none of the water quality standards in division 041 refer to groundwater. Second, division 041 implements the CWA and ORS 468B.048.[15] The CWA does not protect groundwater, *see Exxon Corp. v. Train*, 554 F.2d 1310, 1317-31 (5th Cir. 1977); *Umatilla Waterquality Protective Ass'n v. Smith Frozen Foods, Inc.*, 962 F. Supp. 1312, 1316-20 (D. Or. 1997), and ORS 468B.048 is contained within an ORS subchapter labeled "Surface Water." Finally, the EQC has adopted separate groundwater regulations in OAR chapter 340, division 040, pursuant to its separate groundwater authority under ORS 468B.150-190. Indeed, OAR 340-041-0350(8), which prohibits most new industrial discharges to surface waters in three specified Oregon subbasins, authorizes industrial discharges into or onto the ground in those subbasins only if "[a]ll groundwater quality protection requirements of OAR 340-040-0030 are met." (Emphasis added.) The provision makes no reference to complying with any water quality standards in division *041*.

Most water quality criteria, however, do not specify where they apply within a waterbody; nor do they specify where a waterbody ends. By analogy with DEQ's Permapost and Prospect decisions described above, the criteria should apply only to those portions of a waterbody that contain or might contain the designated uses protected by the criteria. For instance, a criterion intended to protect fish should not apply to water flowing in the hyporheic zone beneath the stream bed, to which the fish have no access.

[15] The OAR lists ORS 468B.030, 468B.035, and 468B.048 as statutes implemented by division 041. ORS 468B.030 and 468B.035 authorize the EQC to implement the CWA, including through establishing "standards of quality for the waters of the state." ORS 468B.048(1) also directly authorizes the EQC to establish, by rule, "standards of quality and purity for the waters of the state."

Guidance from the DEQ Cleanup program is consistent with this conclusion. DEQ's Final Guidance for Identification of Hot Spots, April 23, 1998, addresses the particular issue of how the DEQ cleanup program characterizes porewater in sediments. The DEQ Cleanup rules apply different criteria to hotspots in "groundwater and surface water" than they do to hot spots in "media other than water." The guidance outlines how WQC need to be considered in the context of a hot spot in surface water, *i.e.*, whether the hot spot (or migration from the hot spot) will cause an exceedance of WQC applicable to a designated beneficial use. Of importance to this discussion is that fact that, in the guidance, DEQ does not consider porewater to be part of the "surface water" with respect to which the WQC need to be considered. Instead, it is considered to be part of "sediments," which are identified in the rules as a "media other than water." OAR 340-122-115(31)(b). In the Final Guidance, DEQ asserts that
"Sediments can be defined as geological material submerged below the mean high water level which support biological activity. These materials often accumulate heavy metals and hydrophobic organics. *For the purpose of characterizing sediment hot spots, the definition of sediments also includes the associated pore water.*" (Hot Spot Guidance, section 3.3., page 17.) (Emphasis added.)

E. Applying Numeric Water Quality Criteria

Many, if not most, numeric water quality criteria are more complex than the numeric values that appear in the tables in division 041. The criteria, for example, may be expressed as an average or other value over a period of time or may vary with the ambient conditions of the waterbody, such as temperature, pH, or hardness. Thus, the instantaneous concentration or other value of a pollutant in a waterbody will often not be enough information to know whether the waterbody meets or does not meet the applicable criterion for the pollutant.

1. *Averaging Periods*

Many water quality criteria are expressed as average values.[16] For example, Oregon temperature criteria are expressed as the seven-day average of daily maximum temperatures. *See* OAR 340-041-0028(4).

Criteria for toxic pollutants are also expressed as average values. Tables 20, 33A, and 33B to OAR 340-041-033(2) present water quality criteria for more than 100 pollutants. The criteria are expressed as "acute" and "chronic" criteria to protect aquatic life and "water and fish ingestion" and "fish consumption only" criteria to protect human health. For the aquatic life criteria, each table states, "The acute criteria refer to the average concentration for one (1) hour and the chronic criteria refer to the average concentration for 96 hours (4 days), and . . . these criteria should not be exceeded more than once every three (3) years." The acute and chronic aquatic life criteria for polychlorinated biphenyls (PCBs), for example, are 2 micrograms per liter (μg/l) and

[16] *But cf.* OAR 340-041-0021(1) ("pH values . . . may not fall outside the following ranges: . . . (b) Estuarine and fresh waters: 6.5-8.5").

0.014 μg/l, respectively. The PCB concentration in a waterbody would meet the PCB criteria, then, if the average PCB concentration did not exceed, more than once in a three-year period, 2 μg/l for more than an hour or 0.014 μg/l for more than four days.[17]

The human health criteria in tables 20, 33A, and 33B are generally based on exposures of more than a month, and, for carcinogens, are based on up to a lifetime (70 years) of exposure, *see* DEQ, *RPA IMD* at 36. Such long averaging periods would not allow the criteria to serve as practicable regulatory values, so NPDES permits instead generally apply these values as averages over shorter periods.[18]

---

[17] DEQ uses somewhat different averaging periods to establish water quality-based discharge limits for these pollutants in NPDES permits. The chronic criteria are used to establish monthly average discharge limits, and the acute criteria are used to establish maximum daily discharge limits (which, depending on whether grab or composite discharge sampling techniques are used, may or may not be instantaneous limits). Note, however, that establishing NPDES discharge limits involves considerations beyond those that apply to determining whether instream water quality meets applicable water quality criteria. *See generally* DEQ, *Reasonable Potential Analysis for Toxic Pollutants Internal Management Directive* (2005) (*RPA IMD*).

[18] In the context of establishing NPDES permit discharge limits, the long exposure periods on which the criteria are based are accounted for in part by determining compliance with the criteria after assuming dilution of the discharge with a substantially larger flow of the receiving water than would be used to determine compliance with aquatic life criteria. For aquatic life criteria, dilution would typically be based on a relatively small percentage (25 percent or less) of the extreme low flow of the stream (*e.g.*, the lowest seven-day flow in a ten-year period (7Q10 flow)). For human health criteria, however, DEQ's *RPA IMD* suggests using as much as the entire harmonic mean stream flow to dilute carcinogens and the entire lowest 30-day flow in a five-year period (30Q5 flow) to dilute non-carcinogens. *See RPA IMD* at 29-32, 35, 55. Note that the dilution which is taken into account in establishing the permit limit is separate from consideration of mixing zones, which are discussed in section IV, below. Similarly, EPA's total maximum daily load (TMDL) for dioxin (2,3,7,8-TCDD) in the Columbia River Basin assigns wasteload allocations (WLAs) to bleached kraft paper mills based on the harmonic mean flow of the river. *See* EPA, *Final TMDL for Dioxin Discharges to the Columbia River Basin* at 4-1, 4-2, A-3 (1991). In the NPDES permit for the bleached kraft mill at Wauna, Oregon, this WLA is applied as a monthly average discharge limit (0.21 milligrams per day as a monthly average). NPDES Permit No. 101172 (Fort James Operating Company) at 3 (Sept. 24, 2003). Note that, because of the difficulty of measuring extremely low concentrations of dioxins, the Wauna Mill's NPDES permit includes an alternative concentration limit measured in the effluent from its bleach plant (the source of dioxin) before the effluent is diluted with other mill wastewater streams. This limit is 10 picograms per liter. *See id.* The instream water quality criterion for dioxin (2,3,7,8-TCDD) is 0.013 picograms per liter. *See* OAR 340-041-0033(2), table 20. Thus, the mill's bleach plant discharge concentration limit is approximately 769 times—or nearly three orders of magnitude—higher than the instream water quality criterion. Although the concentration at the point of discharge would be somewhat less because of dilution by other wastewater, the actual discharge concentration at the discharge point to the river would still be substantially higher than the Table 20 or 33A/B value.

F. Implementation Provisions

1. *Mixing Zones*

Oregon's mixing zone rule at OAR 340-041-0053 is an EPA-approved component of Oregon's water quality standards. The rule provides that DEQ "may allow a designated portion of a receiving water to serve as a zone of dilution for wastewaters and receiving waters to mix thoroughly" and that, within the designated zone, DEQ "may suspend all or part of the water quality standards, or set less restrictive standards." OAR 340-041-0053(1), (2). More specifically, within the mixing zone, all water quality criteria may be exceeded except criteria for acute toxicity criteria and criteria that prohibit "objectionable deposits," "[f]loating debris, oil, scum, or other conditions that cause nuisance conditions," and "[s]ubstances in concentrations that produce deleterious amounts of fungal or bacterial growths." *See* OAR 340-041-0053(2)(a). Acute toxicity criteria, however, may be exceeded within a smaller "zone of immediate dilution." *See* OAR 340-041-0053(2)(a)(A).

A number of conditions or restrictions apply to mixing zones:

a. A mixing zone must be "as small as feasible." OAR 340-041-0053(2)(c)(A). This means that the source of pollutants must use all feasible means to achieve water quality criteria without a mixing zone or with a smaller mixing zone.

b. A mixing zone must "[a]void overlap" with other mixing zones "to the extent possible." OAR 340-041-0053(2)(c)(B). This is not a prohibition on overlapping mixing zones, but it does require overlap to be avoided, if feasible, as well as consideration of the potential effects of the overlapping mixing zones on designated uses.

c. A mixing zone must "be less than the total stream width *as necessary to allow passage of fish and other aquatic organisms*." *Id.* (emphasis added). This provision is often misread as an absolute prohibition on mixing zones that extend across a waterbody. By its terms, however, it does not apply to mixing zones for the protection of human health, and DEQ has authorized full-width mixing zones that do not interfere with the passage of fish and aquatic organisms.

d. A mixing zone must "[m]inimize adverse effects on the indigenous biological community." OAR 340-041-0053(2)(c)(C). An example of a more specific statement of this provision regarding temperature effects on salmonids is OAR 340-041-0053(2)(d), "Temperature mixing zones . . . will be established to prevent or minimize the following adverse effects to salmonids inside the mixing zone: (A) Impairment of an active salmonid spawning area . . . ; (B) Acute impairment or instantaneous lethality . . . [caused by] temperatures of 32.0 degrees Celsius . . . or more [for more] . . . than 2 seconds . . ."

e. A mixing zone must "[n]ot threaten public health" and must "[m]inimize adverse effects on other designated beneficial uses outside the mixing zone." OAR 340-

041-0053(2)(c)(D), (E). For example, DEQ likely would not allow a mixing zone for toxic substances within or immediately upstream of a public drinking water intake.

These conditions and restrictions are intended to ensure that mixing zones are consistent with the protection of designated uses, as required by the Clean Water Act and Oregon law. If a proposed mixing zone would impair a designated use, DEQ may not authorize it.

2. *Compliance Schedules*

Oregon's water quality standards authorize DEQ to allow "compliance schedules for the implementation of effluent limits derived from water quality criteria." *See* OAR 340-041-0061(16). In authorizing a compliance schedule, DEQ must ensure that "water quality criteria . . . [are] achieved as soon as possible." *Id.*

3. *Variances*

The EQC may grant point sources variances from water quality standards. *See* OAR 340-041-0061(2). The variance may be granted only if achieving water quality standards is infeasible for one of the six reasons listed in OAR 340-041-0061(2)(c). These include "[h]uman-caused conditions or sources of pollution prevent the attainment of the use and cannot be remedied or would cause more environmental damage to correct than to leave in place" and "[c]ontrols [necessary to achieve water quality standards] . . . would result in substantial and widespread economic and social impact." OAR 340-041-0061(2)(c)(C), (F). Variances must be approved by EPA and are limited to three years, although they may be renewed. *See* OAR 340-041-0061(2)(d).

4. *Site-Specific Criteria*

The EQC may adopt, by rule, water quality criteria for a specific waterbody or part of a waterbody that are more or less stringent than the otherwise applicable criteria. As with any water quality criterion, the criterion must protect the designated uses of the waterbody to which it applies, must be based on a "sound scientific rationale," and must be approved by EPA in order to be effective under the CWA. *See* 33 U.S.C. § 1313(c); 40 C.F.R. § 131.11(a).

5. *Use Attainability Analyses*

If a State demonstrates that a designated use cannot feasibly be "attained" for one of the six reasons specified in 40 C.F.R. § 131.10(g), the State may revise its water quality standards to remove the designated use if the use is not an "existing use," *see id.* An "existing use" is a use that was "attained" on or after November 28, 1975. *Id.*, § 131.3(e). The six reasons for which attainment of a use may be infeasible are the same as those for variances.

Once a designated use has been removed from a waterbody, the water quality criteria that apply to that waterbody may be revised to reflect the revised set of designated uses. In Oregon, both changes in designated uses and water quality criteria

must be adopted by the EQC as a rule revision, *see* ORS 468B.048, and must be approved by EPA in order to be effective under the CWA.

G. Water Quality Standards Compliance Obligations under CWA Sections 401 (Water Quality Certifications) and 402 (NPDES Permits)

Stated in somewhat oversimplified terms, the discharge of a pollutant to a surface water from a point source requires a National Pollutant Discharge Elimination System (NPDES) permit under CWA section 402, 33 U.S.C. § 1342. Under CWA section 401, 33 U.S.C. § 1341, no federal permit may be issued for any activity that involves a discharge from a point source to surface waters unless the applicant provides a certification from the State where the discharge originates that the discharge will comply with specified sections of the CWA. Both the issuance of an NPDES permit and the issuance of a section 401 certification requires a determination that the discharge will comply with applicable water quality standards.

Section 402 authorizes the issuance of an NPDES permit, provided that it ensures compliance with, among other things, CWA section 301. *See* 33 U.S.C. § 1342(b)(1)(A). Section 301 provides that "there shall be achieved . . . any [discharge] . . . limitation . . . necessary to meet water quality standards." *See id.*, § 1311(b)(1)(C); *see also* 40 C.F.R. § 122.44(d).

Under CWA section 401, a State must certify that the discharge at issue "will comply with the applicable provisions of" CWA sections 301 and 303, among others. *See* 33 U.S.C. § 1341(a)(1). Again, CWA section 301 requires the achievement of any discharge limit necessary to meet water quality standards. *See id.* at § 1311(b)(1)(C). CWA section 303 requires states to adopt water quality standards. *See* 33 U.S.C. § 1313(c). States may also condition a certification to ensure compliance with these CWA provisions and with "any other appropriate requirement of State law." State water quality standards are an appropriate requirement of State law. *See PUD No. 1 v. Washington Dept. of Ecology*, 511 U.S. 700 (1994).

With one possible exception, federal and Oregon law do not establish different requirements for complying with water quality standards in NPDES permits and section 401 certifications. The exception is the turbidity standard, which allows certain exceedances of the turbidity criterion for activities authorized by section 401 certifications, but which does not appear to allow such exceedances for discharges that are authorized by an NPDES permit (in the absence of a section 401 certification). *See* OAR 340-041-0036.

Tab 8
DEQ Explanation of Regulatory Mixing Zones in NPDES Permits

Water Quality

Water Quality Permit Program

- Background
- Regulations/ Guidance
- Available Info
- Other Efforts
- Contacts

WQ Info Guides:

- by alphabet
- by category

Regulatory Mixing Zone in NPDES Permits

Background

What is a "regulatory mixing zone"?
A mixing zone is an area where wastewater discharged from a permitted facility enters and "mixes" with a stream or water body. A mixing zone is an established area where water quality standards may be exceeded as long as acutely toxic conditions are prevented and all beneficial uses, such as drinking water, fish habitat, recreation, and other uses are protected.

DEQ calculates mixing zones to be as small as feasible. The size of the area or "zone" varies based on how concentrated the wastewater discharge is, water quality standards, location of the discharge in relation to critical habitat or drinking water intakes, and size or flow of the waterbody. Not all permitted facilities have mixing zones. Most mixing zones in Oregon vary in size from 5 to 300 feet from the point of discharge.

Figure 1: Example of a Typical Mixing Zone

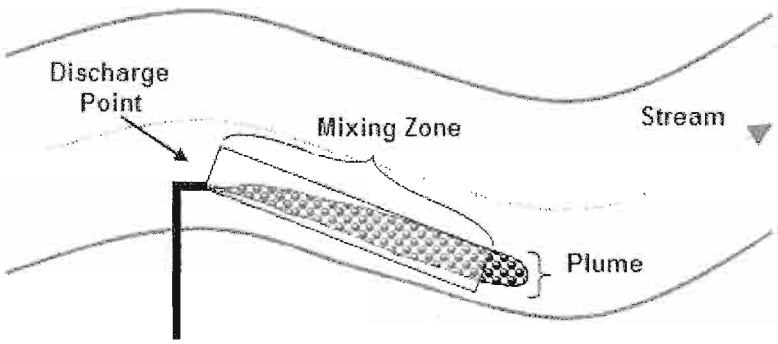

Mixing zones are designed to be protective
DEQ does not permit mixing zones in locations where there is long-term (chronic) human exposure, such as wading beaches or dinking water intakes. Furthermore, DEQ's water quality rules do not allow for the discharge of toxic pollutants in concentrations that would be dangerous for

people and wildlife if they swim or float through a mixing zone. **Figure 2** is an example of the type of modeling DEQ uses to evaluate the mixing zones and more information can be found at the CORMIX Mixing Zone Model Home Page.

Mixing Zones are just one part of the process DEQ uses to protect water quality
The calculation and alignment of a mixing zone is an important component of the overall permitting process that includes the following processes:

- Review of the ambient water quality of the receiving water body
- In-depth inspection and review of facilities requesting permits or renewals
- Ongoing monitoring of all facility effluent
- Effluent sampling and characterization
- Evaluation of the receiving water body to prevent any degradation of water quality
- Development of water effluent limits to ensure the protection of public health and the environment

Figure 2: Example of Water Quality Modeling

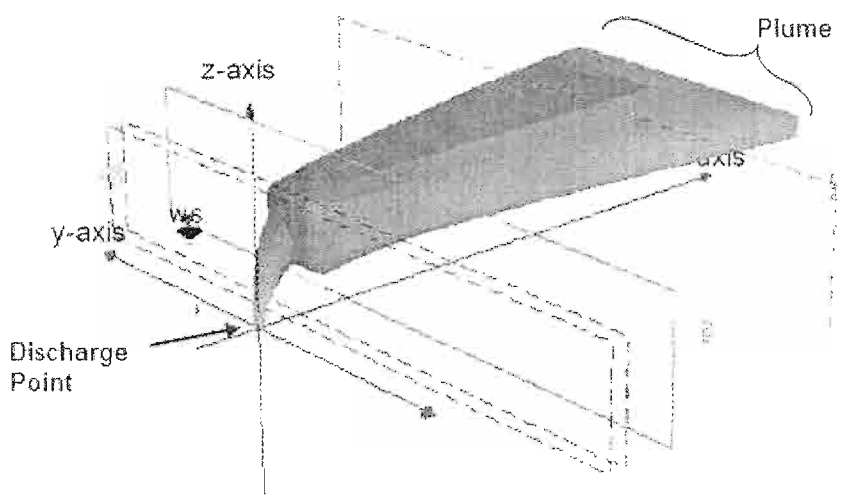

Regulations and Guidance

Are mixing zones legal?
Yes. Under federal rules, the use of mixing zones is approved in most states, including Oregon. Mixing zones are required to protect the beneficial uses of water such as drinking water, fish habitat, recreation, and irrigation.

How are mixing zones regulated?
The federal Environmental Protection Agency (EPA) allows states to adopt their own mixing zone regulations as part of the state's water quality standards (40 CFR §131.13). These state regulations are subject to review and approval by EPA. Oregon's mixing zone rule has been approved by

EPA and can be found at Oregon Administrative Rule (OAR) 340-041-0053.

In addition, there is both federal and state guidance on when mixing zones may be allowed. EPA provides guidance on mixing zones in Water Quality Standards Handbook, August 1994 and Technical Support Document for Water Quality-based Toxics Control, March 1991 PDF (6.5MB). DEQ has recently developed guidance documents to assist permit writers to properly size and locate the zones so that they are more protective of the environment and public health. These documents are located on the web site at: http://www.deq.state.or.us/wq/pubs/pubs.htm#imds.

Who is subject to mixing zone regulations?
The mixing zone regulations currently affect about 300 facilities (including both municipal wastewater treatment plants and industries) that operate under existing water quality permits. DEQ will review and, if necessary, update each mixing zone every five-years during the facilities' permit renewal cycle. Any permit applicants requesting a mixing zone would also need to conform to the mixing zone regulations.

Mixing Zone Locations and Available Information

Where are mixing zones located?
Information about specific mixing zones is available by:

1. Contact your regional DEQ office and ask for the Water Quality Program. The staff will help in accessing public records which describe permitted facilities and the location of their associated mixing zones.
2. Access DEQ's Wastewater Permits Database. The database can be queried based upon county, city, zip code or watershed name, and will report location by address and geographic coordinates.
3. DEQ has developed maps of the location of major sewage treatment plants and industrial facilities with mixing zones on the Willamette River. The maps show the approximate river mile location of the facilities and contain information from the permit and related documents:
    - Lower Willamette PDF (1MB)
    - Middle Willamette PDF (1MB)
    - Upper Willamette PDF (1MB)

How do I get information on regulatory mixing zones in my area?
For more detailed on a particular permit or mixing zone, contact the nearest DEQ office to schedule an appointment to look at permit files. The files will include specific information about the mixing zone, including its size and location. There is also a public comment and review process associated with each new permit and permit renewal.

Available education resources
DEQ recognizes that the subject of mixing zones can be complex and would like to recommend the following education references:

- Discussion of mixing zone models: CORMIX Mixing Zone Model
- General discussion of the regulations governing wastewater

treatment and the processes used (EPA) PDF (4MB)
- Glossary of water quality terms used both in this document and hyperlinks (EPA)

DEQ staff is also available to provide informational presentations for interested parties concerning mixing zones and their calculation.

Contact Information

For more information, please contact:

- Mike Wiltsey e-mail
  Surface Water Management Section, Water Quality Division, (503) 229-5047

[print version]

Oregon Department of Environmental Quality
Headquarters: 811 Sixth Ave., Portland, OR 97204-1390
Phone: 503-229-5696 or toll free in Oregon 1-800-452-4011
Oregon Telecommunications Relay Service: 1-800-735-2900 FAX: 503-229-6124

The Oregon Department of Environmental Quality is a regulatory agency authorized to protect Oregon's environment by the State of Oregon and the Environmental Protection Agency.

DEQ Web site privacy notice

Projects and Programs Publications and Forms Laws and Regulations Public Notices Permits and Licenses Databases
About DEQ | Contact DEQ | Search | Feedback

Tab 9
Example of Water Quality Certification

UNITED STATES ENVIRONMENTAL PROTECTION AGENCY
REGION 10
1200 Sixth Avenue
Seattle, Washington 98101

Reply To
Attn Of: ETPA-083

CLEAN WATER ACT § 401 WATER QUALITY CERTIFICATION

REMOVAL ACTION
NORTHWEST (NW) NATURAL GASCO SITE

I INTRODUCTION

This Clean Water Act §401 Water Quality Certification (WQC) is prepared in support of removal activities being conducted under the Administrative Order on Consent (Order) with the U.S. Environmental Protection Agency (EPA) on April 28, 2004 to perform a time-critical removal action at the "Gasco" Site (Site) (USEPA 2004a), under the authority of the Comprehensive Environmental Response, Compensation and Liability Act of 1980 (CERCLA), as amended. A copy of this WQC and any future amendments will be placed in the Site File. In addition, copies of this original and any future amendments shall be kept on the job site and made readily available for reference by EPA, the contractor, and any other appropriate federal, tribal, state, and local inspectors.

The Order requires that NW Natural perform a number of actions associated with removing a tar body at the surface of the nearshore sediment adjacent to the Site. The tar body, which is the subject of this Removal Action, is present in and on the river sediments because of oil-gasification waste discharges early in the 20th century. The direct discharge of waste material to the river ceased in the 1940s. The objectives of the Removal Action include the elimination of exposure to the river from tar, creating a surface of lesser total polycyclic aromatic hydrocarbons (TPAH) concentrations, placing a thin-layer barrier pilot cap, allowing monitoring for any project seepage, preventing migration of chemicals from tar downstream, complying with relevant regulations to the extent practicable, and contributing to the performance of a long-term remedial action for the Site. The scope of the Removal Action is described in the Action Memorandum dated June 17, 2005. The Removal Action is described in detail in the Removal Action Project Plan (RAPP, Anchor Environmental, July 2005).

Sediment characterization information obtained in July 2004 defined the lateral and vertical extent of the tar body that would be removed. The study resulted in a total proposed removal volume of approximately 15,000 cubic yards (cy) of combined

- Discussion of water quality trigger exceedances and any additional monitoring that may have resulted
- Data quality review results based on calibration and precision/accuracy information, including any data qualifiers and reasons for those qualifiers
- An appendix containing all completed water quality monitoring and surface sediment sample forms
- An appendix containing all calibration information
- A list of all of the best management practices (BMPs) employed during the project implementation, when and why those were used, and an assessment of the effectiveness of those BMPs

D General Conditions

1. Final project plans as described in the final removal design documents (Removal Action Project Plan and Appendices including Construction Quality Assurance Plan and Construction Water and Sediment Monitoring Plan) have been reviewed and approved by EPA. Contractor quality control plans will be provided to EPA for review and comment. EPA will review these plans to ensure that they are adequate and consistent with the RAPP. If necessary, EPA will provide comments to NW Natural. These plans should be consistent with and implemented in accordance with the terms and conditions of this WQC. Any significant additions, changes, modifications, and revisions to the Plans by the contractor selected to do the work shall require prior notification to and approval by EPA. If necessary, an amended WQC will be prepared by the EPA.

2. Containment system.

As described in the RAPP, containment of the dredge area for the protection of water quality will be accomplished primarily by installation of a silt curtain system. The silt curtain system will be installed prior to any in-water dredging at the site and will be consistent with the EPA-approved RAPP. The silt curtain system includes a series of both permeable and impermeable silt curtains (inner and outer containment areas), a bedload baffle system, floating booms and skirt, and a bubble curtain. The containment system will remain in-place throughout the construction period.

3. Fish timing window.

In order to minimize potential chemical and physical impacts from construction activities and suspended sediments to out-migrating juvenile salmonids utilizing the nearshore environment for migration and feeding, project in-water construction activities in Portland Harbor are limited to the periods from July 1 to October 31 and December 1 to January 31, unless timing extensions are specifically coordinated and approved by the appropriate resource agency.

4. Water Quality Standards.

Water quality standards (OAR, Chapter 340, Division 041) pertaining to the Lower Willamette River, except those human health criteria that may be impracticable, shall apply to this project as measured at a distance of 100 meters (328 feet) from the point of dredging (or 150 feet from the outer containment structure) (see Section IV.D.5; also see attached Table 1 for analytes and criteria). EPA expects that any short-term exceedances of any water quality standards will be outweighed by the long-term benefit of completing the Removal Action, but anticipates that all water quality standards will ~~to~~ be met at the compliance distances indicated below. The point of compliance with standards will be those stations described in Section IV.D.5. Within the compliance zone, the standard for turbidity and temperature are waived, as are the acute criteria applicable to any identified chemicals-of-concern. The standard for dissolved oxygen may be exceeded but shall not be caused to drop below 6.0 mg/l. The compliance distances outlined below are not an authorization to exceed those criteria concentrations for the entire duration of construction, but to allow the project to be implemented while using appropriate measures (BMPs) to reduce any potential exceedances of water quality criteria and/or negative impacts to beneficial uses. In no case does this WQC authorize degradation of water quality that significantly interferes with or becomes injurious to characteristic water uses, causes long-term harm, or impair beneficial uses.

Dissolved Oxygen. At the point of compliance, 100 meters (328 feet) from the point of dredging (or 150 feet from the outer containment structure), DO shall exceed 6.5 mg/L. At no time should dissolved oxygen drop below 6.0 mg/L at any station. Should this occur, then all in-water activities shall cease immediately, and EPA shall be notified. Work shall not resume until dissolved oxygen levels have returned to compliant levels and approval has been given by EPA.

pH. At the point of compliance, 100 meters (328 feet) from the point of dredging (or 150 feet from the outer containment structure), pH will remain between 6.5 and 8.5.

Temperature. The lower mainstem Willamette River has been designated as a salmonid migration corridor. At the point of compliance, 100 meters (328 feet) from the point of dredging (or 150 feet from the outer containment structure), seven-day average temperature shall not exceed 18.0°C. When ambient conditions exceed 18.0°C, no temperature increases will be allowed which will raise the receiving water temperature greater than 0.3°C. Should this occur, then all in-water activities shall cease immediately, and EPA shall be notified. Work shall not resume until temperature levels have returned to compliant levels and approval has been given by EPA.

Turbidity. At the point of compliance, 100 meters (328 feet) from the point of dredging (or 150 feet from the outer containment structure), turbidity shall not exceed 3 NTU over background turbidity when the background turbidity is 50 NTU or less, or have more than a 10 percent increase in turbidity when the background turbidity is more than 50 NTU. At no time should turbidity exceed

50 NTU over background. Should this occur, then all in-water activities shall cease immediately, and EPA shall be notified. Work shall not resume until turbidity levels have returned to compliant levels and approval has been given to EPA.

Chemicals of Concern (COCs). Whole water samples for chemicals of concern will be taken consistent with the Construction Water and Sediment Monitoring Plan (see attached Table 1 for analytes and criteria).

If DO, turbidity, or a COC acute standard is exceeded at a point of compliance, the steps outlined in Section IV.E Operational Response must be followed.

5. Compliance Determination.

For this project the entire water area within 328 feet (100 meters) of the approximate center of the construction operation is authorized as the project area. Observation reports and water quality data collected within and at the edge of the project area for any reason shall be provided to the EPA in a timely manner.

For all operations, ambient field water quality parameters will be monitored in the river 300 feet directly upstream (for background conditions) and 150 feet downstream of the operation. Three downstream stations will be monitored in an arc as depicted in Figure D-2 of the Construction Water and Sediment Monitoring Plan. As the river is tidally influenced at this location, if flow reversal is observed to occur during construction, then the sampling stations will be reversed to continue the down-current arc and up-current (for background conditions) pattern as appropriate.

For dredging operations, containment barriers, or silt curtains, will be deployed around active dredging operations. Where containment barriers are used, the locations for compliance and monitoring will be 150 feet upstream and downstream of the edge of the barrier, notwithstanding the two preceding paragraphs. Containment barriers may be deployed near other operations if initial observations indicate that they may reduce potential water quality impacts.

6. Water Quality Monitoring

Water quality monitoring will be conducted in accordance with the Construction Water and Sediment Monitoring Plan (WSMP) in Appendix D of the RAPP. The WSMP describes the water quality measurements, monitoring methods, and data collected that will be used in the assessment process described in the Removal Action Environmental Protection Plan (Appendix E of the RAPP). Any significant additions, changes, modifications, and revisions to the plan of field operations by the contractor selected to do the work requires prior notification and approval by EPA.

At least two weeks prior to the project start date, NW Natural must identify a Quality Assurance Official (QAO), or the individual that will perform onsite oversight and

coordination functions. The water quality monitoring field team should be prepared to obtain and process temperature, DO, pH, COC, and turbidity samples on any day they are in the field.

Monitoring will take place near each of the following operations:

- Dredging/Piling Removal or Placement
- Barge loading
- Transfer of dredged material to upland transport
- Upland processing
- Placement of cover/cap

Water quality monitoring will be conducted for the following parameters: field parameters turbidity (in nephelometric turbidity units (NTU), temperature (in degrees Celsius), dissolved oxygen (in mg/L), and pH (in standard units); and laboratory parameters PAHs (anthracene, benzo(a)pyrene, benzo(a)anthracene, fluoranthene, fluorene, naphthalene, dibenzofuran) and cyanide.

Sampling depths for both the field and laboratory parameters will be located at the approximate top, middle, and bottom of the water column if the water depth permits collecting samples from three intervals separated by at least 5 feet from each other. Top and bottom samples will be taken 1 foot below the surface of the water and above the mud line, respectively. Thus, for water depths less than 7 feet, two samples will be collected and for water depths less than 2 feet, one sample will be collected (sample approach shown on Figure D-1 of the WSMP)

Whole water samples will be taken for the dissolved PAHs and cyanide at one station immediately downstream of the operation at a distance of 100 meters (328 feet) from the point of dredging (or 150 feet from the edge of the last containment barrier). For the first sampling event, an upstream grab sample will also be taken to establish background conditions. Multiple depth-specific samples will be collected at the compliance point consistent with the description above.

Field parameters will be measured at the start of each operation at least once every hour during active in-water work. On any day active in-water work occurs, the first sample will be taken 1 hour after the initiation of the activity, and once at each 1-hour interval thereafter. This frequency of monitoring for field parameters will continue until four consecutive hourly events indicate no exceedance of any trigger levers described in Appendix D of the RAPP. If no exceedance is identified following four consecutive hourly events the sampling frequency will be reduced to every 4 hours. If results exceed the triggers presented in the RAPP, these same parameters will be measured again within 30 minutes of determination of the exceedance. If the exceedance continues, then procedures discussed in Section IV.E will be followed. Hourly frequency will resume if any visible decline in water quality is observed.

Laboratory parameters will be measured once a day for three consecutive days at the start of the project. These parameters will be measured once per week thereafter. If

substantial exceedances occur, additional monitoring events may be conducted as determined in consultation with EPA.

For field parameters only, initial background conditions for the Site will be established prior to the start of any active in-water work. A minimum of seven independent measurements at all applicable water depths will be made 300 feet upstream of the expected location of containment barriers around the work area over the course of a two-day period just prior to construction initiation. For each parameter, the 95th percentile upper confidence limit on the mean will be used to represent initial background conditions.

The background sampling for laboratory parameters will consist of one upstream event (with samples taken at the depths noted above) during the first sampling event.

7. Spills Prevention

Reasonable precautions and controls must be used to prevent incidental and accidental discharges of petroleum products or other deleterious or toxic materials from entering the water as a result of any in-water activities. Materials such as sorbent pads and booms must be available on-site and must be used to contain and clean up petroleum product spilled as a result of the in-water activities. If an oil sheen is observed, immediate corrective actions must be taken to modify the operation to prevent further degradation, or the activity must cease. EPA must be notified of the situation (see Section IV.C).

If such conditions are observed, monitoring for field and laboratory parameters following the above procedures will be conducted and procedures for protective measures as described in the RAEPP will be followed.

8. Silt Plume

Visual monitoring of any silt plumes generated by the construction activities will take place whenever construction is actively underway. It will be conducted by the Water Quality Monitoring Field Leader when present on-site and by the Construction Quality Assurance Officer at all other times. Observations will be made as to the presence of any of the following occurring outside containment barriers (where present):

- High turbidity that might reasonably result in exceedance of compliance triggers
- Sheens or other visible contamination in the water
- Distressed or dying fish

During in-water activities, if a large silt plume is observed in the vicinity of construction operations at any time, then a description of the color, source, and size of the plume must be recorded, and potentially additional water quality measurements collected. EPA must be notified and decisions coordinated (see Section IV.C). Any additional water quality measurements will be taken at the discretion of the Quality Assurance Official and EPA, and are intended to define the area of impact and assess the situation to allow informed decisions.