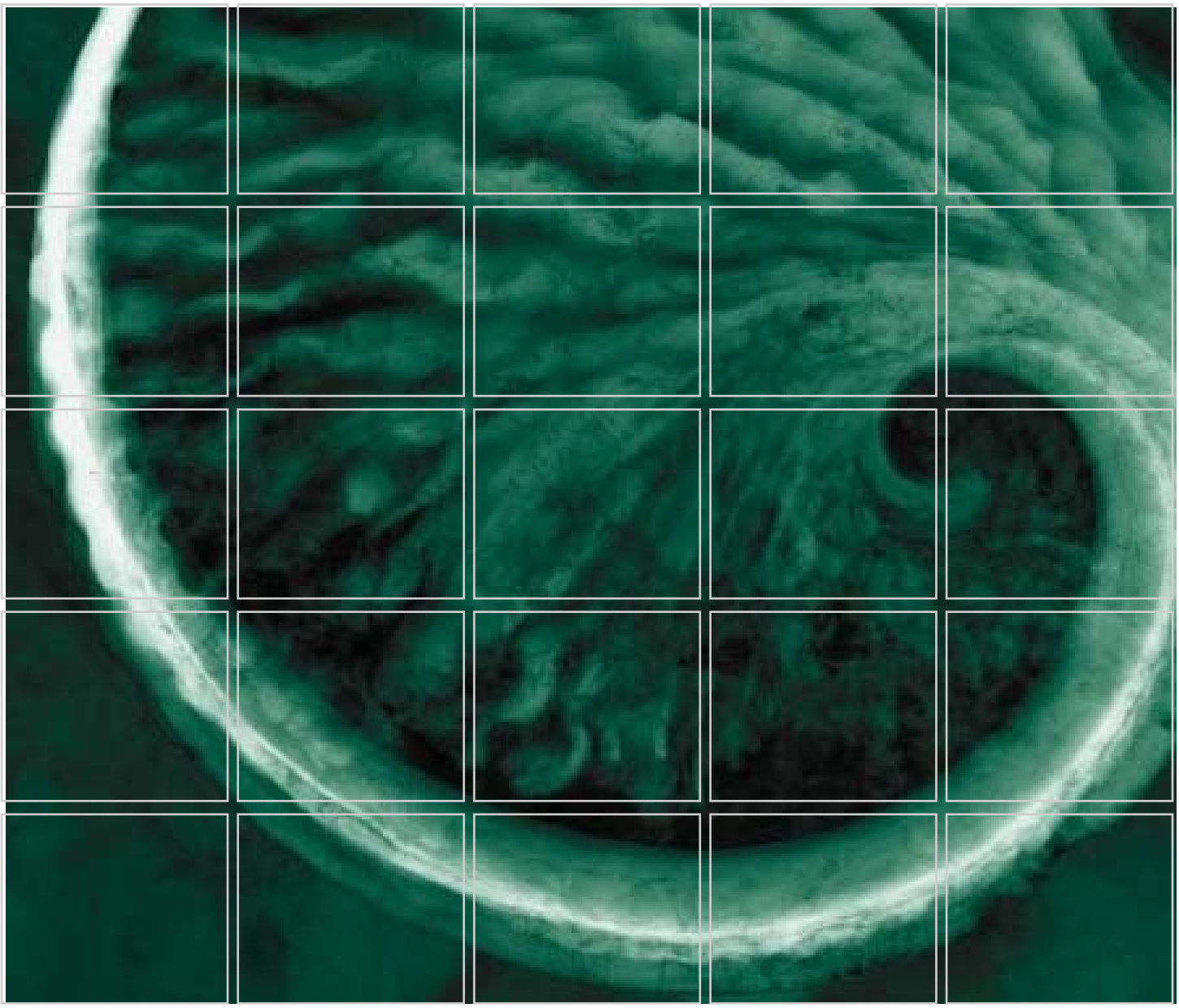

DRAFT Groundwater Source Control Measure Design and Implementation Work Plan

Arkema, Inc. Facility
Portland, Oregon

June 2009

Prepared for:
Legacy Site Services LLC

www.erm.com

Delivering sustainable solutions in a more competitive world

ERM

Legacy Site Services

DRAFT Groundwater Source Control Measure Design and Implementation Work Plan

Arkema Inc. Facility
Portland Oregon

June 2009

Project No. 0093634.04

DRAFT

Brendan A. Robinson, P.E.
Senior Engineer

DRAFT

Erik C. Ipsen, P.E.
Partner

Environmental Resources Management
101 SW Main Street, Suite 804
Portland, Oregon 97204
T: 503-488-5282
F: 503-488-5142

TABLE OF CONTENTS

LIST OF FIGURES *ii*

LIST OF ACRONYMS *iii*

1.0 INTRODUCTION *1*

1.1 BACKGROUND *2*

1.2 OBJECTIVES *5*

1.3 WORK PLAN ORGANIZATION *6*

2.0 GROUNDWATER BARRIER WALL DESIGN AND IMPLEMENTATION *7*

2.1 PERMITTING *7*

2.2 PRE-DESIGN INVESTIGATION *7*

2.3 PRE-FINAL DESIGN *8*

2.4 FINAL DESIGN *9*

2.5 CONTRACTOR BIDDING *9*

2.6 CONSTRUCTION *10*

2.7 OPERATION AND MAINTENANCE *10*

3.0 GROUNDWATER EXTRACTION AND TREATMENT SYSTEM *11*

3.1 PERMITTING *11*

3.2 PRE-DESIGN INVESTIGATION *12*

3.3 PRE-FINAL DESIGN *12*

3.4 FINAL DESIGN *13*

3.5 EQUIPMENT PROCUREMENT *13*

3.6 CONTRACTOR BIDDING *14*

3.7 CONSTRUCTION *14*

3.8 STARTUP *15*

3.9 OPERATION AND MAINTENANCE *16*

4.0 REPORTING AND SCHEDULE *17*

4.1 VARIATIONS FROM WORK PLAN *17*

5.0 PROJECT PERSONNEL *18*

6.0 REFERENCES *19*

LIST OF FIGURES

(Figures immediately follow the text)

Figure 1 Riverside High Bank Barrier Wall Plan

Figure 2 Fully Enclosed Barrier Wall Plan

Figure 3 Conceptual Flow Diagram

Figure 4 Project Schedule

LIST OF ACRONYMS

Consent Order	The Order on Consent requiring SCM and FS issued by ODEQ, signed 31 October 2008 (DEQ No. LQVC-NWR-08-04)
COPC	Constituents of potential concern
DNAPL	Dense non-aqueous phase liquid
FFS	Focused Feasibility Study
FS	Feasibility Study
GWBW	Groundwater barrier wall
GWET	Groundwater extraction and treatment
IRM	Interim Remedial Measure
LSS	Legacy Site Services, Inc.
ODEQ	Oregon Department of Environmental Quality
SCM	Source Control Measure
The site	The former Arkema Portland Plant located at 6400 NW Front Avenue, Portland, Oregon
USEPA	United States Environmental Protection Agency
Work Plan	Groundwater Source Control Measure Design and Implementation Work Plan (ERM 2009)

1.0 INTRODUCTION

On behalf of Legacy Site Services, Inc. (LSS), ERM-West Inc. (ERM) has prepared this *Groundwater Source Control Measure Design and Implementation Work Plan* (Work Plan) for the former Arkema Portland Plant (the site) located at 6400 NW Front Avenue, Portland, Oregon. This Work Plan is prepared pursuant to the Order on Consent requiring Source Control Measures (SCMs) and Feasibility Study (FS) issued by the Oregon Department of Environmental Quality (ODEQ), signed 31 October 2008 (DEQ No. LQVC-NWR-08-04) (Consent Order).

The goal of the Groundwater SCM is to establish hydraulic control of groundwater constituents of potential concern (COPCs) at the Arkema site, and maintain an inward groundwater gradient towards the upland portion of the site, away from the Willamette River. The approved SCM consists of constructing a conventional slurry barrier wall and installation and operation of a groundwater extraction and treatment (GWET) system.

The purpose of the Work Plan is to provide the rationale and scope of work to design and implement the Groundwater SCM. This Work Plan has been prepared in accordance with the *Scoping Technical Memorandum Groundwater Source Control Interim Remedial Measure*, (ERM 2006) (Scoping TM), *Summary of Remedial Technology Alternatives Memorandum,* (ERM 2008a) (Remedial Alternatives TM), *Draft Focused Feasibility Study,* ERM 2008b) (FFS), and associated comments and approvals received from the ODEQ and United States Environmental Protection Agency (USEPA).

This work plan includes the following scope of work elements:

- Design of the groundwater barrier wall (GWBW), including: permitting, pre-design investigations, pre-design package, and final design package;

- Implementation of the GWBW, including: preparation of contractor bidding documents, contractor selection, and construction;

- Design of the GWET system, including: permitting, pre-design investigations, equipment specification/procurement, pre-design package, and final design package; and

- Implementation of the GWET system, including: preparation of contractor bidding documents, contractor selection, construction, system startup, and operation and maintenance.

The following subsections provide the description of the FFS process to date, the objectives of this Work Plan, and the organization for the remainder of the work plan. Details regarding the site history and background are presented in the FFS (ERM 2008b).

1.1 BACKGROUND

A Joint Source Control Strategy (JSCS)[1] was developed by ODEQ and USEPA to identify, evaluate, and control sources of contamination (that may impact the Willamette River) in a manner that is consistent with the objective and schedule for the Portland Harbor Superfund Site RI/FS. The goal of the JSCS is to achieve timely upland source control to prevent the risk of significant recontamination after the Portland Harbor cleanup is completed. The JSCS recommends that upland source control be substantially completed to the greatest extent practicable before or during any early removal actions, as well as non-time critical removal actions, in order to reduce the potential for recontamination of river sediment.

Several innovative in situ interim remedial measures (IRMs) were implemented at the Site between September 2000 and April 2006. Despite the success of those IRMs, LSS did not believe an in situ remedial approach would be capable of meeting the source control objectives, many of which are not yet defined, in the USEPA-envisioned timeframe for the Non Time Critical Removal Action. Because of the Non Time Critical Removal Action schedule, LSS has been required to pursue an alternative strategy of physical and hydraulic containment to achieve groundwater source control.

Following discussions with the ODEQ in September 2006, the draft Scoping TM (ERM 2006) was prepared to identify and outline the general concepts necessary to complete a Groundwater SCM. ODEQ provided

---

[1] *Portland Harbor Joint Source Control Strategy prepared by the Oregon Department of Environmental Quality and the United States Environmental Protection Agency* (December 2005) (a framework for making upland source control decisions at the Portland Harbor Superfund Site).

comments on this memorandum in January 2007, which were addressed in a letter submitted by LSS in March 2007.

LSS subsequently commenced preparation of an FFS in April 2007 to evaluate the alternatives for a Groundwater SCM to achieve the following remedial action objectives:

- Establish hydraulic control of COPCs in groundwater from the primary source areas (Lots 3 and 4) at the Site to the Willamette River;

- Reduce the potential for recontamination of river sediments via the groundwater pathway following the Arkema non-time-critical removal action;

- Allow upland SCMs to proceed on an independent schedule from the non-time-critical removal action without impeding or compromising that work; and

- Implement a remedy, which to the extent practicable, will complement and be compatible with potential final upland remedies for the Site.

The Groundwater SCM evaluated in the FFS (ERM 2008b) consisted of the following primary components:

1. A containment barrier wall to physically separate the affected upland portions and in-water portions of the Site;

2. Hydraulic control ("groundwater extraction and treatment") to prevent groundwater containing unacceptable concentrations of COPCs from moving around, over, or under the containment barrier wall; and

3. Management of treated groundwater from the ex situ treatment system described above.

As requested by ODEQ, LSS submitted the Remedial Alternatives TM (ERM 2008a) in January 2008, in order to summarize the range of remedial alternatives (i.e. proposed barrier wall routes, treatment system options, and discharge options) being evaluated as part of the FFS (ERM 2008b).

Groundwater modeling, a GWBW geotechnical engineering analysis, slurry materials testing, and a groundwater treatability study were completed. Following the completion of this work, technology screening,

a detailed evaluation, and comparative analysis of the various remedial action alternatives was performed. The FFS was submitted by LSS in May 2008.

The ODEQ conditionally approved the FFS (ERM 2008b) and provided comments on the proposed Groundwater SCM in a letter dated 29 July 2008. On 12 September 2008, LSS submitted responses to ODEQ comments on the FFS.

In a memorandum dated 20 February 2009 the ODEQ recommended alternatives for the primary components of the Groundwater SCM as follows:

Groundwater Barrier Wall

The recommended barrier wall component for the Groundwater SCM was construction of a groundwater barrier wall:

- Along the River Side High Bank route (top of the river bank with necessary setback);
- Using conventional slurry wall technology; and
- To a depth to the top of the basalt (approximately 50 to 85 vertical feet below ground surface along the GWW route).

A conceptual layout of the recommended riverside barrier wall is presented in Figure 1. The alternative, fully enclosed barrier wall layout is presented in Figure 2. The final barrier wall route will be determined during the pre-final design phase[2].

Ex Situ Groundwater Treatment

The recommended ex situ groundwater treatment alternative for the Groundwater SCM consisted of the following:

---

[2] Based upon discussions and agreements with ODEQ, both the downgradient and fully enclosed barrier wall alignments would be capable of achieving the Remedial Objectives. The parties agree that the existing groundwater model will be recalibrated based on the results of proposed pump testing. Both groundwater barrier wall alignments will be re-evaluated and the optimum alignment confirmed.

- Chemical precipitation reactor with aeration, and pH adjustment via sodium hydroxide;

- Solids handling system (i.e., clarifier with polymer feed, sludge holding tank, filter press, and associated equipment);

- pH Adjustment Tank;

- Optional post-clarification solids filter if required;

- Fluidized bed reactor with solids filter for biomass handling, with the option of utilizing either the paced bed reactor or EHC/sand reactor; and

- Two liquid-phase granular activated carbon vessels in series.

A schematic of the components of the ex situ groundwater treatment system is presented in Figure 3.

Treated Groundwater Management

The recommended treated water discharge option consisted of:

- Discharge to the Willamette River.

The ODEQ published a public notice on 9 March 2009 seeking comments on the recommended remedial alternative. A public meeting was held on 14 April 2009 to present the Groundwater SCM. The public comment period closed on 21 April 2009 and the ODEQ issued a response to public comments in a letter dated 21 May 2009. This Groundwater SCM Work Plan is the subsequent deliverable following the FFS, as required by the Consent Order.

1.2 OBJECTIVES

The objectives of this Work Plan are to:

- Describe the process for design and implementation of the Groundwater SCM;

- Describe the general process for implementation, identify tasks, and specify design deliverables and a schedule for preparation; and

- Identify additional work plans and document submittals that are required.

1.3 WORK PLAN ORGANIZATION

The remainder of this Work Plan is organized as follows:

- Section two details the scope of activities to be performed as part of the design and implementation of the GWBW;
- Section three details the scope of activities to be performed as part of the design and implementation of the GWET;
- Section four presents a summary of the reporting and document submittal requirements and estimated schedule;
- Section five presents a summary of the project team; and
- Section six lists the references cited in this Work Plan.

2.0 GROUNDWATER BARRIER WALL DESIGN AND IMPLEMENTATION

This section details the tasks and deliverables that will be required for the design and implementation of the GWBW component of the Groundwater SCM.

2.1 PERMITTING

Preliminary discussions with City of Portland personnel indicated that since the project is being conducted under a Consent Order with ODEQ, the project can be implemented through the Exempt Process. Under this process, City of Portland development permit approvals are not required; however, the substantive requirements of the permits must be met. The applicable City of Portland permits include:

- Grading Permit, including an approved Erosion, Sediment, and Pollution Control Plan; and
- Building Permit.

Additional permits requirements may be need to be achieved following a land use review and negotiation with City of Portland Development Review Services regarding the Greenway Overlay zoning (i.e. River Industrial) and potential impacts due to design and construction.

Specific State of Oregon permits that may be required for the construction of the GWBW include:

- A Construction Stormwater General Permit (1200C).

Based on discussions between the ODEQ and Federal agencies, no Federal permits will be required for this project. The final design package will be provided to other Federal agencies as determined necessary by ODEQ.

2.2 PRE-DESIGN INVESTIGATION

A pre-design investigation will be performed with the primary purpose of aiding the design of the GWET. However, several of the tasks performed

will provide additional data inputs for the design of the GWBW. These tasks include:

- A review of current site stratigraphic, surveying, and geotechnical data to ensure compatibility of the GWBW route proposed in the FFS with the ODEQ recommended construction technology (i.e., conventional slurry wall), and obtaining, if necessary, additional information where data gaps are found.

- Installation of additional monitoring and recovery wells as part of the pre-design investigation of the GWET system (see Section 3.2). The data obtained from the additional monitoring and recovery wells will be presented as part of the GWET pre-design investigation report and used to support the Pre-Final Design.

2.3 PRE-FINAL DESIGN

The objective of the pre-final design is to locate, size and provide detail of the technical features of the GWBW component of the Groundwater SCM. The pre-final design scope will include the preparation of:

- Design drawings;

- Technical specifications;

- Related design package submittals (e.g., Pre-Design Investigation results, design bases and criteria, supporting design analyses and calculations); and

- Preparation of additional planning documents for construction of the GWBW, including:
  - Construction Quality Assurance Plan;
  - Draft Operation and Maintenance Plan;
  - Compliance Monitoring Plan;
  - Health and Safety Plan;
  - Contaminated Material Management Plan;
  - Emergency Response and Spill Contingency Plan;
  - Air Monitoring Plan;

- Dust Control Plan;
- Site Management Plan; and
- Erosion, Sediment and Pollution Control Plan.

The pre-design package will be submitted to ODEQ and USEPA for review, comment, and approval. Responses to ODEQ and USEPA comments will be accomplished by appropriate changes included in the final design documents.

2.4 *FINAL DESIGN*

The Final Design scope will include:

- Revising the pre-final design package to incorporate ODEQ and USEPA comments/revisions; and
- Incorporating potential design considerations based on contractor input.

Copies of the final design package will be submitted to ODEQ and USEPA.

2.5 *CONTRACTOR BIDDING*

The objective of the contract bidding phase is to engage contractor(s) capable of successfully and safely implementing the GWBW component of the Groundwater SCM. The GWBW contractor bidding phase includes:

- Preparing bid documents;
- Contractor bidding, evaluation, and clarification of bids;
- Contractor selection; and
- Contract execution.

Contractors will be selected and engaged through LSS's established procurement procedures, which include verification of reference projects, review and evaluation of health and safety performance, and other criteria.

2.6 *CONSTRUCTION*

The tasks to be completed during the GWBW construction phase include:

- Mobilization and site preparation;
- Trenching to clear obstructions and remove/abandon or plug underground utilities (may be performed concurrently with slurry wall construction activities rather than as separate mobilization);
- Slurry wall installation, including construction of work platforms and slurry mixing pad(s), trench excavation, and placement of slurry backfill;
- Construction of low permeability cap over the GWBW ;
- Restoration and installation of monitoring wells to measure performance of GWBW; and
- Site restoration and de-mobilization.

2.7 *OPERATION AND MAINTENANCE*

The objectives of the operation and maintenance (O&M) phase are to provide sufficient data to demonstrate compliance with GWBW remedial action objectives. Routine O&M will commence after the construction phase, and consist of the following tasks:

- Routine surface integrity checks and maintenance;
- Documenting system performance monitoring parameters; and
- Repairs, if necessary.

3.0 GROUNDWATER EXTRACTION AND TREATMENT SYSTEM

This section details the tasks and deliverables that will be required for the design and implementation of the GWET component of the Groundwater SCM.

3.1 PERMITTING

This section discusses the permit requirements for the GWET. As discussed stated Section 2.1, preliminary discussions with City of Portland personnel indicated that since the project is being conducted under a Consent Order with ODEQ, the project can be implemented through the Exempt Process. Under this process, City of Portland development permit approvals are not required; however, the substantive requirements of the permits must be met. The applicable City of Portland permits required for the construction of the GWET and associated infrastructure include:

- Building Permit; and
- Electrical, plumbing, and mechanical permits.

Additional permits may be required following a land use review by the Portland Bureau of Development Services.

State of Oregon permits that are expected to be required for the construction and operation of the GWET include:

- National Pollutant Discharge Elimination System (NPDES) Industrial Stormwater Permit for discharging treated groundwater to the Willamette River (currently under discussion with ODEQ); and
- A Construction Stormwater General Permit (1200C), if required.

Based on discussions between the ODEQ and Federal agencies, no Federal permits will be required for this project. The final design package will be provided to other Federal agencies as determined necessary by ODEQ.

3.2 *PRE-DESIGN INVESTIGATION*

The objective of the pre-design investigation task is to identify and resolve the data required to complete the design and implementation of the GWET system. The pre-design investigation tasks were detailed in the *Draft Data Gaps Assessment Work Plan* (ERM 2009). The pre-design investigation tasks include:

- Conducting a site wide groundwater monitoring event to update the contaminant distribution and anticipated GWET system influent characteristics;
- Soil sampling during monitoring and recovery well installation, and analysis of physical parameters in support of recovery well design;
- Conducting four pumping tests to further characterize the hydrogeological conditions of the Shallow and Intermediate Zones to reduce the uncertainty of sensitive groundwater model input parameters; and
- Additional groundwater modeling to verify the required groundwater pumping rate, recovery well layout, and recovery well design.

The data obtained from the additional groundwater monitoring, well installation, and additional groundwater modeling results will be presented as part of the GWET system pre-design investigation report and used to support the Pre-Final Design.

3.3 *PRE-FINAL DESIGN*

The objective of the pre-final design is to detail the technical approach (es) to be employed during the implementation of the GWET system component of the Groundwater SCM. The pre-final design scope includes the preparation of:

- Design drawings;
- Technical specifications;
- Related design package submittals (e.g., Pre-Design Investigation results, design bases and criteria, supporting design analyses and calculations); and

- Preparation of additional planning documents for the installation, start up, and long term operation of the GWET, including:
  - Construction Quality Assurance Plan;
  - Draft Operation and Maintenance Plan;
  - Compliance Monitoring Plan;
  - Health and Safety Plan;
  - Emergency Response and Spill Contingency Plan;
  - Site Management Plan;
  - Pollution Control Plan; and
  - Waste Management Plan.

The pre-design package will be submitted to ODEQ and USEPA for review, comment, and approval.

3.4 FINAL DESIGN

The Final Design task will include:

- Revision of the pre-final design package to incorporate ODEQ and USEPA comments and revisions; and

- Incorporating potential new information that may become available during ODEQ's and USEPA's review.

Copies of the final design package will be submitted to ODEQ and USEPA.

3.5 EQUIPMENT PROCUREMENT

The equipment procurement process consists of the following steps:

- Preparation of equipment performance specifications and requests for bids;

- Equipment vendor bidding;

- Evaluation and clarification of bids;

- Equipment vendor selection and purchase order issuance;
- Fabrication drawing preparation, review, and approval (if necessary); and
- Delivery of the system components.

The equipment procurement process overlaps the pre-final design and final design tasks. The final design of the GWET system will be determined in part by the specific groundwater treatment units selected during the procurement process.

3.6 CONTRACTOR BIDDING

The objective of the contract bidding phase is to engage contractor(s) capable of successfully and safely implementing the GWET component of the SCM. The contract bidding task includes:

- Preparing bid documents, incorporating the Final Design;
- Contractor bidding, evaluation and clarification of bids;
- Contractor selection; and
- Contract execution.

Contractors will be selected and engaged through LSS's established procurement procedures, which include verification of reference projects, review and evaluation of health and safety performance, and other criteria.

3.7 CONSTRUCTION

The tasks to be completed during the construction phase include:

- Mobilization and site preparation;
- Installation of extraction wells and piping;
- Installation of performance monitoring wells, if necessary;

- Construction of the treatment system building;
- Placement and connection of groundwater treatment system components;
- Connection of utilities;
- Installation of discharge piping and tie-in to discharge point;
- Site restoration; and
- Demobilization.

3.8 STARTUP

System startup is a critical step in the implementation of the GWET system. The purpose of the startup phase is to confirm that the individual components function correctly, identify and resolve any operating issues in the treatment system, and optimize system performance.

The tasks to be completed during the system startup phase include:

- Pre-startup process hazards review;
- Bump testing equipment and checking controls/interlocks to verify they operate as designed and making any necessary adjustments;
- Treatment performance verification beginning at low flow rates and gradually increasing flow until required flow rate is achieved and adequate biological population is developed;
- Equipment performance optimization;
- Troubleshooting; and
- O&M Plan revisions based on actual observations.

The results of the startup phase will be reported in the GWET system construction and implementation report. An updated O&M Plan will also be prepared and submitted.

3.9 OPERATION AND MAINTENANCE

The objectives of the O&M phase are to provide sufficient data for compliance monitoring, permit reporting, and system optimization of the GWET system. Routine O&M will commence after the startup phase, and consists of the following tasks:

- Routine system checks and maintenance;
- Documenting system operating parameters and information required for permits, treatment system performance monitoring (influent and effluent monitoring), and optimization;
- Groundwater elevation monitoring for evaluation of capture zones, confirmation of hydraulic containment, and system performance optimization;
- Groundwater sampling and analysis;
- Troubleshooting; and
- Repairs, if necessary.

The design documents, O&M plan, and other deliverables will provide details regarding the tasks outlined above.

4.0 REPORTING AND SCHEDULE

During each phase of the investigation, design, and implementation of the Groundwater SCM, LSS will submit deliverables to the ODEQ and USEPA for review and approval. The major submittals, agency reviews, project milestones, and estimated schedule are summarized in Figure 4.

4.1 VARIATIONS FROM WORK PLAN

Any unexpected conditions, alternative activities, personnel, or other variations from ODEQ approved work plans will, to the greatest extent practicable, be identified and communicated to ODEQ before the respective scope of work is conducted, when possible. These conditions and variations will be communicated in the Quarterly Progress Reports to ODEQ, as required by the Consent Order. Work plans will be revised, as necessary, to reflect new information and will be submitted to ODEQ for approval. If variations from the approved work plans are encountered during the scope of work, all variations will be documented in the final report submitted to ODEQ, and LSS will notify ODEQ's project manager verbally of the variation as soon as possible, but no later than 24 hours after the variation identification.

If an event occurs that is beyond LSS's reasonable control and that causes or might cause a delay or deviation in performance of the requirements of the Consent Order, LSS will promptly notify ODEQ's Project Manager verbally of the cause of the delay or deviation, its anticipated duration, the measures that have been or will be taken to prevent or minimize the delay or deviation, and the timetable by which LSS proposes to carry out such measures. LSS will confirm this information in writing within five working days of the verbal notification.

5.0 PROJECT PERSONNEL

A brief description of personnel currently anticipated to be involved with the SOW is included below. This team is consistent with the personnel used by LSS to date in performance of work under the Voluntary Agreement. Therefore, in accordance with Section 8 A. (1) of the Consent Order, this team is considered approved by ODEQ. Proposed changes to this team will be submitted in writing to ODEQ as described in Section 8 A. (2) of the Consent Order. Subcontractors have not yet been identified at this stage of the project work.

- Todd Slater, LSS (todd.slater@total.com; 610.594.4430)
  Primary point of contact for LSS, agent for Arkema;
- Erik Ipsen, PE, Partner, ERM (erik.ipsen@erm.com; 503.488.5282)
  Primary point of contact and overall Project Manager for ERM, consultant managing performance of the SOW on behalf of LSS;
- Brendan Robinson, PE, Senior Engineer, ERM (brendan.robinson@erm.com; 503.488.5282)
  Project Manager for the implementation of the Groundwater SCM;
- Bill Butler, PE, Partner, ERM (bill.butler@erm.com; 610.524.3500)
  Leading the groundwater treatment aspects of the Groundwater SCM;
- Doyon Main, PE (Texas), ERM (doyon.main@erm.com; 281.600.1000)
  Lead technical consultant for the barrier wall engineering and construction management aspects of the Groundwater SCM;
- Ted Cota, PG, ERM (ted.cota@erm.com; 303.741.5050)
  Leading hydrology and groundwater modeling aspects of the Groundwater SCM;
- Larry Patterson, PE, ERM (larry.patterson@erm.com; 503.225.7210)
  On-site contact for LSS at the Arkema Portland facility;
- Kevin Deeny, PE, KC Environmental (kdeeny@comcast.net; 215.949.0524)
  Senior Technical Advisor for Groundwater and Stormwater Treatment;
- Karen Traeger, LSS (karen.traeger@total.com; 303.741.0426)
  Legal Counsel for LSS; and
- Stephen Parkinson, Groff Murphy (sparkinson@GroffMurphy.com; 206.832.1484)
  Legal Counsel for LSS.

6.0 REFERENCES

ERM 2005. *Upland Remedial Investigation Report Lots 3 & 4 and Tract A – Revision 1*, Environmental Resources Management, December 2005.

ERM 2006. *Scoping Technical Memorandum*, Environmental Resources Management, December 2006.

ERM 2008a. *Summary of Remedial Technology Alternatives Memorandum,* Environmental Resources Management, January 2008.

ERM 2008b. *Focused Feasibility Study,* Environmental Resources Management, May 2008.

ERM 2009. *Draft Data Gaps Assessment Work Plan,* Environmental Resources Management, March 2009.

ODEQ 2005, *Portland Harbor Joint Source Control Strategy*, Oregon Department of Environmental Quality, December 2005.

Figures

Project No. 0065572
Date: 02/12/08
Drawn By: T. Cota
GIS File:

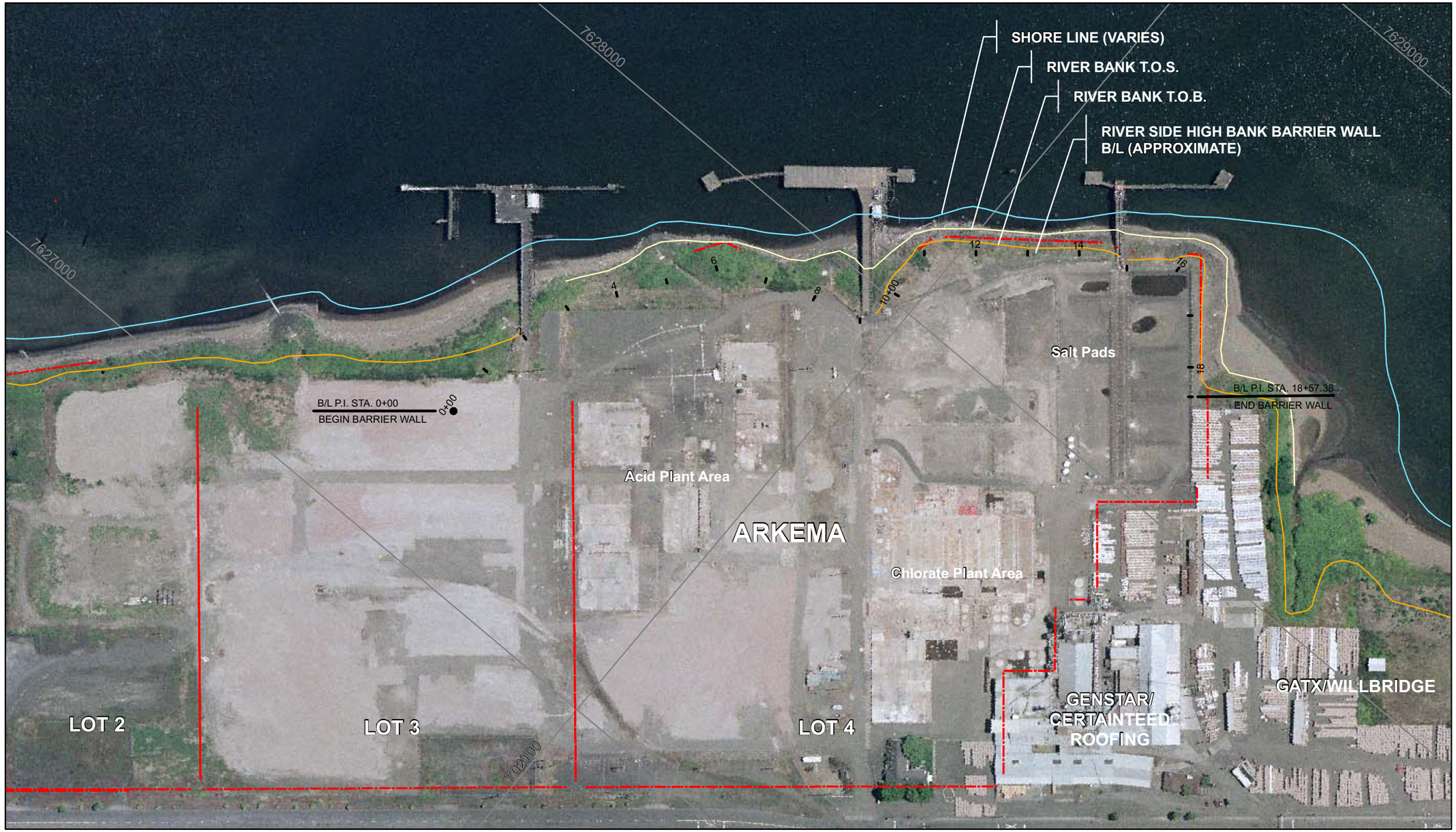

Aerial Photography - July, 2005

LEGEND
- Barrier Wall
- River Bank T.O.B.
- River Bank T.O.S
- Shore Line
- Approximate Lot Boundary

N

0 200 400
Feet

ABBREVIATIONS AND ACRONYMS

B/L	BASELINE
P.I.	POINT OF INTERSECTION
STA.	STATION (100-FOOT STATION BASIS)
T.O.B.	TOP OF BANK
T.O.S.	TOE OF SLOPE

Figure 1
River Side High Bank Barrier Wall Plan
Groundwater Source Control Measure
Arkema, Inc.
Portland, Oregon

ERM 02/08

Project No. 0065572
Date: 02/12/08
Drawn By: T. Cota
GIS File:

Aerial Photography - July, 2005

LEGEND
- Barrier Wall
- River Bank T.O.B.
- River Bank T.O.S
- Shore Line
- Approximate Lot Boundary

N

0 200 400
Feet

ABBREVIATIONS AND ACRONYMS: SEE FIGURE 4-1.

Figure 2
Full Enclosure Barrier Wall Plan
Groundwater Source Control Measure
Arkema, Inc.
Portland, Oregon

ERM 02/08

Drawn By: AP/CU 5-14-08 Project: Arkema 0065572.01.0001

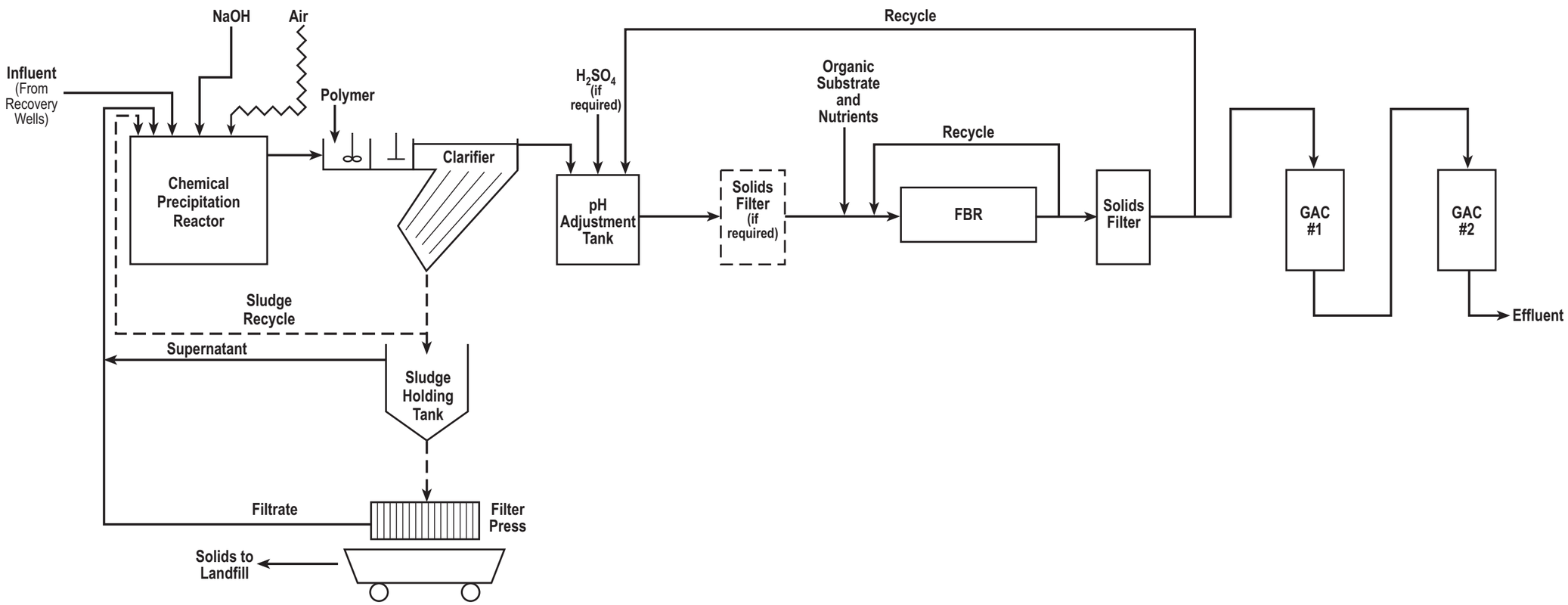

LEGEND

Groundwater	FBR - Fluidized Bed Reactor
Sludge	GAC - Granular Activated Carbon
Air	

Figure 3
Conceptual Flow Diagram
Chemical Precipitation with
Anaerobic Biological Treatment
Groundwater Source Control Measure
Arkema Inc.
Portland, Oregon

ERM

Figure 4
Project Schedule
Groundwater Source Control Measure Design and Implementation Work Plan
Arkema, Inc. - Portland, Oregon

ID	Task Name	Duration	Start	Finish
1	**Groundwater Source Control Measure Work Plan**	**60 days**	**Thu 6/25/09**	**Sun 8/23/09**
2	Submit GW SCM Work Plan	0 days	Thu 6/25/09	Thu 6/25/09
3	Review of GW SCM Work Plan	30 days	Thu 6/25/09	Fri 7/24/09
4	Response to Comments on GW SCM Work Plan	30 days	Sat 7/25/09	Sun 8/23/09
5	Approval of GW SCM Work Plan	0 days	Sun 8/23/09	Sun 8/23/09
6	**Groundwater Source Control Measure Design and Implementation**	**924 days**	**Fri 6/26/09**	**Thu 1/5/12**
7	**Groundwater Barrier Wall**	**615 days**	**Mon 8/24/09**	**Sat 4/30/11**
8	**GWBW Pre-Design Investigation**	**135 days**	**Mon 8/24/09**	**Tue 1/5/10**
9	Existing Data Review	30 days	Mon 8/24/09	Tue 9/22/09
10	Pre-Design Investigation and Report	30 days	Wed 9/23/09	Thu 10/22/09
11	Review of Pre-Design Investigation Report	30 days	Fri 10/23/09	Sat 11/21/09
12	Response to ODEQ Comments	15 days	Sun 11/22/09	Sun 12/6/09
13	Negotiation and Finalization of Pre-Design Investigation Report	30 days	Mon 12/7/09	Tue 1/5/10
14	Approval of Pre-Design Investigation Report	0 days	Tue 1/5/10	Tue 1/5/10
15	**GWBW Pre-Final Design**	**165 days**	**Sat 11/7/09**	**Tue 4/20/10**
16	Pre-Final Design Preparation and Submittal	120 days	Sat 11/7/09	Sat 3/6/10
17	Pre-Final Design Review	45 days	Sun 3/7/10	Tue 4/20/10
18	Approval of Pre-Final Design	0 days	Tue 4/20/10	Tue 4/20/10
19	**GWBW Final Design**	**90 days**	**Sat 6/5/10**	**Thu 9/2/10**
20	Final Design Preparation (Incorporate Agency Pre-Final Design Comments)	60 days	Sat 6/5/10	Tue 8/3/10
21	Final Design Review	30 days	Wed 8/4/10	Thu 9/2/10
22	Approval of Final Design	0 days	Thu 9/2/10	Thu 9/2/10
23	**GWBW Permitting**	**90 days**	**Mon 7/5/10**	**Sat 10/2/10**
24	Permit Application Preparation	30 days	Mon 7/5/10	Tue 8/3/10
25	Agency Permit Application Review	60 days	Wed 8/4/10	Sat 10/2/10
26	Permit Issued	0 days	Sat 10/2/10	Sat 10/2/10
27	**GWBW Contractor Bidding**	**135 days**	**Wed 4/21/10**	**Thu 9/2/10**
28	Preparation of Bid Documents	30 days	Wed 4/21/10	Thu 5/20/10
29	Contractor Bid Submission	45 days	Fri 5/21/10	Sun 7/4/10
30	Evaluation of Contractor Bids	30 days	Mon 7/5/10	Tue 8/3/10
31	Contractor Selection	0 days	Tue 8/3/10	Tue 8/3/10
32	Contract Execution	30 days	Wed 8/4/10	Thu 9/2/10
33	**GWBW Construction**	**210 days**	**Sun 10/3/10**	**Sat 4/30/11**
34	Mobilization and Site Preparation	30 days	Sun 10/3/10	Mon 11/1/10
35	Pre-Clearance Trenching and Slurry Wall Construction (Estimated)	120 days	Tue 11/2/10	Tue 3/1/11
36	Slurry Wall Capping	20 days	Wed 3/2/11	Mon 3/21/11
37	Monitoring Well Installation	20 days	Tue 3/22/11	Sun 4/10/11
38	Demobilization	20 days	Mon 4/11/11	Sat 4/30/11
39	Commence Long Term Operation and Maintenance	0 days	Sat 4/30/11	Sat 4/30/11
40	**Groundwater Extraction and Treatment System**	**924 days**	**Fri 6/26/09**	**Thu 1/5/12**
41	**GWET Pre-Design Investigation**	**270 days**	**Fri 7/10/09**	**Mon 4/5/10**
42	Approval of Data Gaps Assessment Work Plan	0 days	Fri 7/10/09	Fri 7/10/09
43	Aquifer Pump Testing	120 days	Fri 7/10/09	Fri 11/6/09
44	Groundwater Model Update and Evaluation	60 days	Sat 11/7/09	Tue 1/5/10
45	Sitewide Groundwater Monitoring	120 days	Fri 7/10/09	Fri 11/6/09
46	Prepare Pre-design Investigation Report	60 days	Sun 11/22/09	Wed 1/20/10
47	Review of Pre-design Investigation Report	30 days	Thu 1/21/10	Fri 2/19/10
48	Response to ODEQ Comments	15 days	Sat 2/20/10	Sat 3/6/10
49	Negotiation and Finalization of Pre-Design Investigation Report	30 days	Sun 3/7/10	Mon 4/5/10

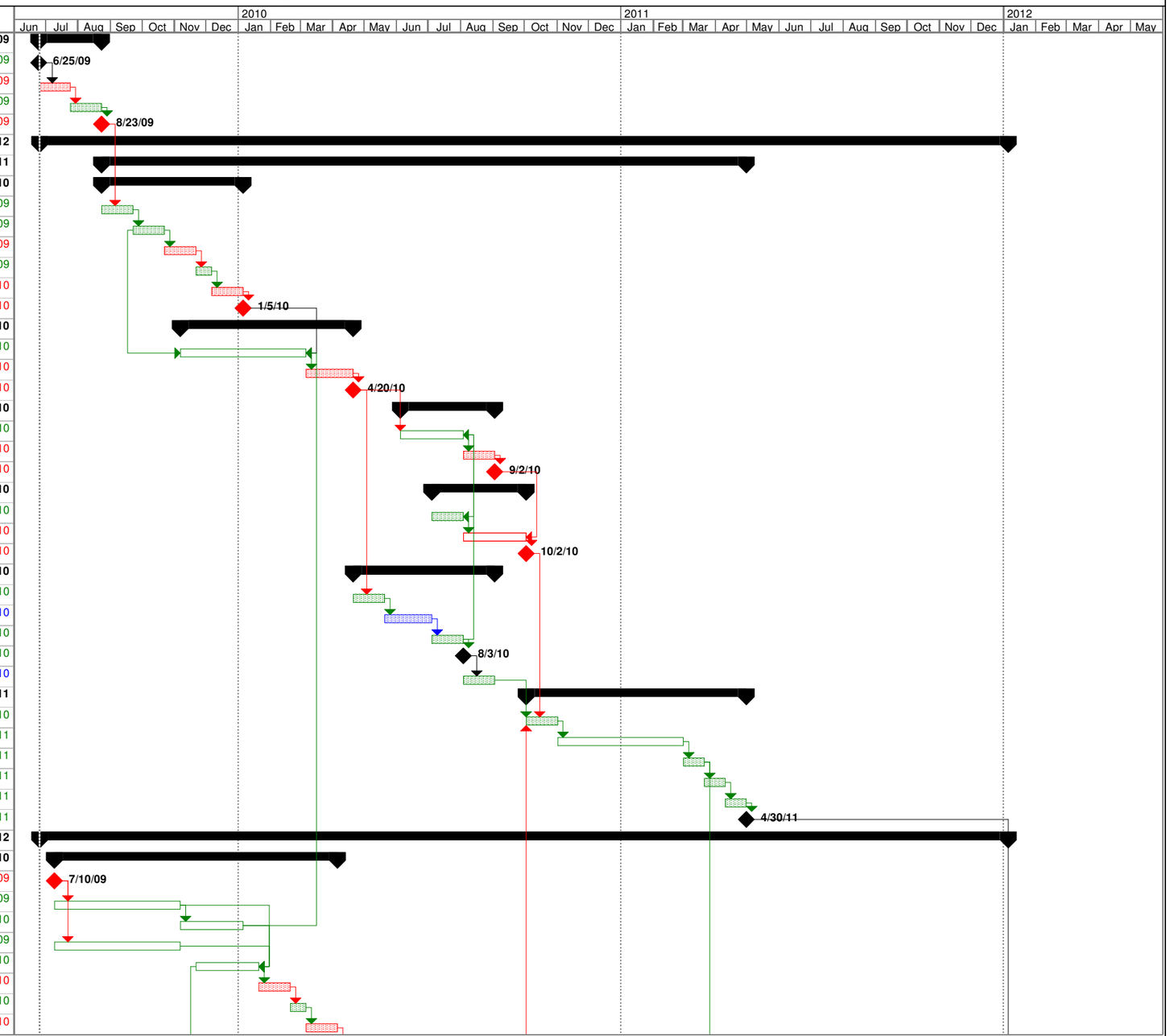

File: GW SCM D&I Schedule_062509_
Date: Thu 6/25/09

Task | Summary | Rolled Up Milestone | DEQ Milestone | Baseline (12/15/08)
Baseline (12/15/08) | Milestone | DEQ Task | Public Review & Comment

Figure 4
Project Schedule
Groundwater Source Control Measure Design and Implementation Work Plan
Arkema, Inc. - Portland, Oregon

ID	Task Name	Duration	Start	Finish
50	Approval of Pre-design Investigation Report	0 days	Mon 4/5/10	Mon 4/5/10
51	**GWET Pre-Final Design**	**165 days**	**Tue 12/22/09**	**Fri 6/4/10**
52	Pre-Final Design Preparation and Submittal	120 days	Tue 12/22/09	Tue 4/20/10
53	Pre-Final Design Review	45 days	Wed 4/21/10	Fri 6/4/10
54	Approval of Pre-Final Design	0 days	Fri 6/4/10	Fri 6/4/10
55	**GWET Final Design**	**90 days**	**Wed 8/4/10**	**Mon 11/1/10**
56	Final Design Preparation (Incorporate Agency Pre-Final Design Comments)	30 days	Wed 8/4/10	Thu 9/2/10
57	Final Design Review	30 days	Fri 9/3/10	Sat 10/2/10
58	Response to ODEQ Comments	30 days	Sun 10/3/10	Mon 11/1/10
59	Approval of Final Design	0 days	Mon 11/1/10	Mon 11/1/10
60	**GWET Permitting**	**494 days**	**Fri 6/26/09**	**Mon 11/1/10**
61	Negotiation and Finalization of NPDES Permit	189 days	Fri 6/26/09	Thu 12/31/09
62	Final NDPES Permit Issued	0 days	Thu 12/31/09	Thu 12/31/09
63	Construction Permit Application Submittal	30 days	Sat 6/5/10	Sun 7/4/10
64	Agency Construction Permit Application Review	60 days	Fri 9/3/10	Mon 11/1/10
65	Construction Permit Issued	0 days	Mon 11/1/10	Mon 11/1/10
66	**GWET Equipment Procurement**	**300 days**	**Sat 6/5/10**	**Thu 3/31/11**
67	Preparation of Bid Documents	30 days	Sat 6/5/10	Sun 7/4/10
68	Vendor Bid Submission	30 days	Mon 7/5/10	Tue 8/3/10
69	Vendor Bid Evaluation	30 days	Wed 8/4/10	Thu 9/2/10
70	Contractor Selection	0 days	Thu 9/2/10	Thu 9/2/10
71	Contract Execution	30 days	Fri 9/3/10	Sat 10/2/10
72	Equipment Fabrication and Delivery	180 days	Sun 10/3/10	Thu 3/31/11
73	**GWET Contractor Bidding**	**120 days**	**Sat 6/5/10**	**Sat 10/2/10**
74	Prepare Bid Documents	30 days	Sat 6/5/10	Sun 7/4/10
75	Contractor Bid Submission	30 days	Mon 7/5/10	Tue 8/3/10
76	Evaluation of Contractor Bids	30 days	Wed 8/4/10	Thu 9/2/10
77	Contractor Selection	0 days	Thu 9/2/10	Thu 9/2/10
78	Contract Execution	30 days	Fri 9/3/10	Sat 10/2/10
79	**GWET Construction**	**150 days**	**Tue 3/22/11**	**Thu 8/18/11**
80	Mobilization and Site Preparation	20 days	Tue 3/22/11	Sun 4/10/11
81	Recovery Well and Piping Installation	30 days	Mon 4/11/11	Tue 5/10/11
82	Performance Monitoring Well Installation	30 days	Mon 4/11/11	Tue 5/10/11
83	Treatment Equipment Building Construction	60 days	Mon 4/11/11	Thu 6/9/11
84	Installation of Treatment System Components	40 days	Fri 6/10/11	Tue 7/19/11
85	Installation of Discharge Piping	30 days	Fri 6/10/11	Sat 7/9/11
86	Site Restoration	15 days	Wed 7/20/11	Wed 8/3/11
87	Demobilization	15 days	Thu 8/4/11	Thu 8/18/11
88	**GWET System Startup**	**180 days**	**Sun 7/10/11**	**Thu 1/5/12**
89	Bump Testing	15 days	Sun 7/10/11	Sun 7/24/11
90	Low Flow Performance Verification	45 days	Mon 7/25/11	Wed 9/7/11
91	System Optimization	120 days	Thu 9/8/11	Thu 1/5/12
92	Commence Long Term Operation and Maintenance	0 days	Thu 1/5/12	Thu 1/5/12
93	**Groundwater Source Control Measure Implementation Report**	**180 days**	**Fri 1/6/12**	**Tue 7/3/12**
94	Construction Report Preparation and Submittal	60 days	Fri 1/6/12	Mon 3/5/12
95	Review of Construction Completion Report	60 days	Tue 3/6/12	Fri 5/4/12
96	Response to ODEQ Comments	30 days	Sat 5/5/12	Sun 6/3/12
97	Negotiation and Finalization of GW SCM Implementation Report	30 days	Mon 6/4/12	Tue 7/3/12
98	Approval of GW SCM Implementation Report	0 days	Tue 7/3/12	Tue 7/3/12

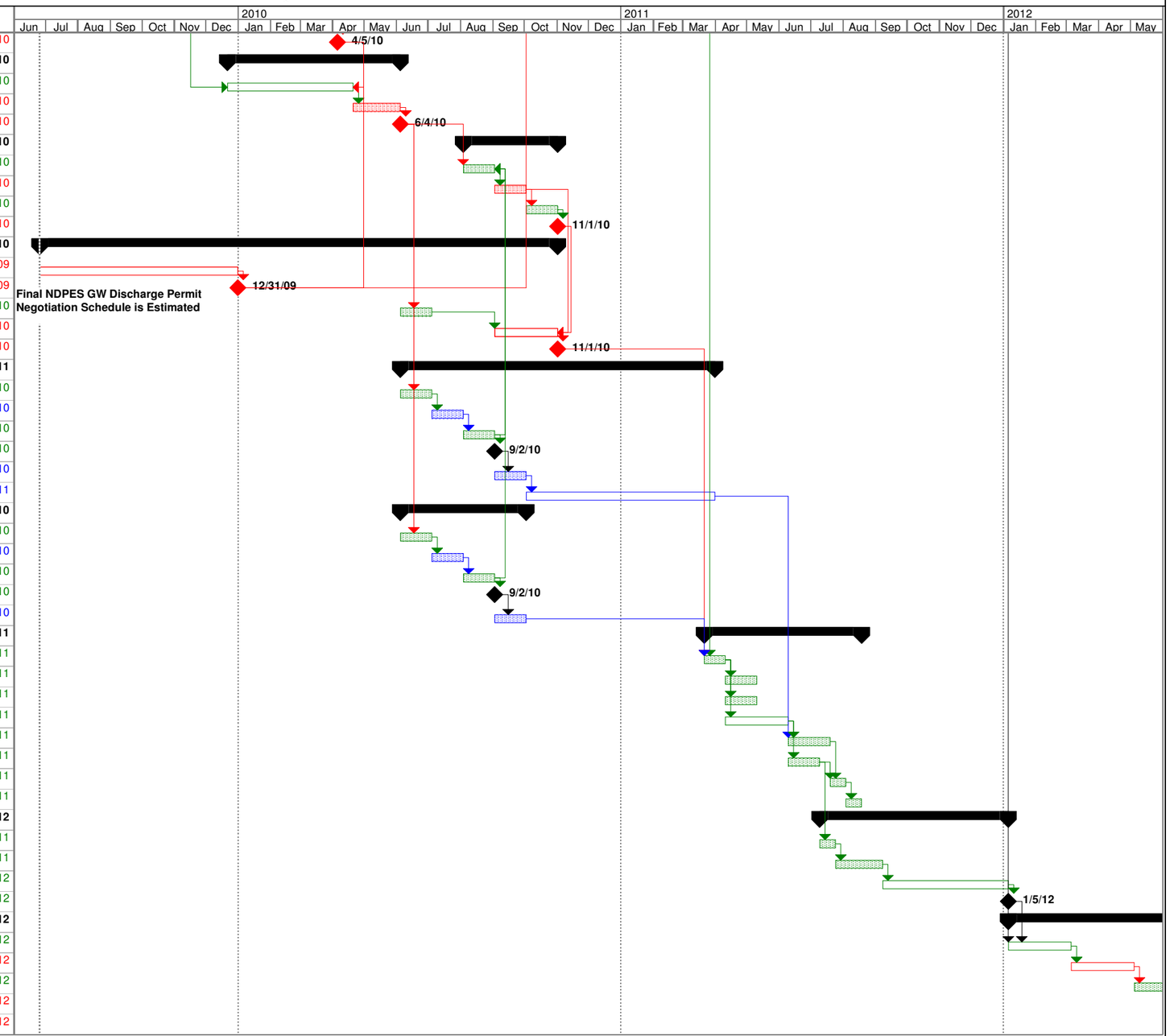

File: GW SCM D&I Schedule_062509_
Date: Thu 6/25/09

Task | Summary | Rolled Up Milestone | DEQ Milestone | Baseline (12/15/08)
Baseline (12/15/08) | Milestone | DEQ Task | Public Review & Comment