Memorandum

Environmental Resources Management

101 SW Main Street
Suite 804
Portland, OR 97204
(503) 488-5282
(503) 488-5142 (fax)

To:	Mr. Matt McClincy
Company:	Oregon Department of Environmental Quality (ODEQ)
From:	Erik Ipsen (ERM), Chris Underwood (ERM)
Cc:	Todd Slater (LSS), Henning Larsen (ODEQ), Tom Gainer (ODEQ), Claudia Powers (Ater Wynne), Karen Traeger (LSS)
File number:	0065572.01
Date:	2 January 2008
Subject:	Summary of Remedial Technology Alternatives, Groundwater Source Control Interim Remedial Measure Focused Feasibility Study, Arkema Inc., Portland, Oregon

The purpose of this memorandum is to present a summary of remedial technology alternatives being assembled as part of the Focused Feasibility Study (FFS) for the Groundwater Source Control Interim Remedial Measure at the Arkema Inc. (Arkema) property located in Portland, Oregon (the "site"). As agreed with the Oregon Department of Environmental Quality at our meeting on 10 October 2007, these alternatives are being presented in advance of the FFS in order to obtain agreement prior to submission of the full FFS report.

These alternatives are generally consistent with those presented in the *Scoping Technical Memorandum*, *Groundwater Source Control Interim Remedial Measure*, dated December 2006 (Technical Scoping Memorandum). Some modifications to the alternatives have been made based on Oregon Department of Environmental Quality comments to the Technical Scoping Memorandum, the results of the groundwater treatability and slurry compatibility studies currently underway, as well as other factors. These modifications are noted in this memorandum.

The proposed upland groundwater source control remedy consists of the following three general components:

- Groundwater barrier wall;
- Groundwater extraction and treatment system; and
- Treated groundwater discharge.

The remedial alternatives presented in this memorandum have been grouped by these primary components and are discussed further below.

GROUNDWATER BARRIER WALL ALTERNATIVES

Groundwater barrier wall alternatives considered during the FFS will address three site-specific characteristics: 1) configuration, 2) type, and 3) depth.

Barrier Wall Configuration

Although groundwater pumping alone can be sufficient to contain groundwater, a barrier wall is proposed to physically cut off groundwater flow from the site to the Willamette River and to reduce the volume of groundwater that needs to be pumped to maintain hydraulic control. Without the barrier wall along the river, a large portion of groundwater pumped from the site would likely be drawn from the river. Two barrier wall configuration alternatives will be evaluated as part of the FFS:

- Downgradient Barrier Wall (Alternative BW-1); and
- Fully-Enclosed Barrier Wall (Alternative BW-2).

Preliminary conceptual layouts for these alternatives are provided as Figures 1 and 2, respectively.

Alternative BW-1 is a barrier wall located downgradient of the upland source area and adjacent to the existing top of bank of the Willamette River, with landward extensions (i.e., "wing walls") to help reduce potential groundwater migration around the ends of the wall (in combination with groundwater extraction). The barrier wall will be installed as close to the upland side of the top of bank as technically practical based on geotechnical and construction considerations, including slope and pilot trench stability, potential obstructions, and equipment clearance limits.

Alternative BW-2 is a barrier wall that fully encloses the upland source area. As is the case for Alternative BW-1, the downgradient portion of the barrier wall located adjacent to the river will be installed as close to the upland side of top of bank as practical. Portions of the barrier wall located adjacent to the southern and western property lines would be slightly offset into the site from the actual property boundary based on

construction considerations, including potential obstructions, surface and subsurface utilities, and equipment clearance limits.

Groundwater modeling and cost comparisons are currently being conducted to support evaluation of the barrier wall configurations for the FFS.

Barrier Wall Type

Three types of barrier walls will be evaluated during the FFS:

- Vibrated beam slurry barrier wall;
- Conventional soil-clay slurry barrier wall; and
- Sheet pile barrier wall.

Preliminary conceptual details for these barrier wall types are provided as Figure 3. For the three types, the barrier wall and related facilities would be constructed in stages. General construction details for each type are provided in Table 1. A geotechnical evaluation and a slurry backfill mix design and compatibility study are being performed as part of the FFS to support evaluation of the barrier wall types. Details are presented in *Scope of Work for Geotechnical Evaluation and Slurry Compatibility Testing in Support of the Groundwater Source Control Interim Remedial Measure*, dated 23 March 2007.

Barrier Wall Depth

In general, the surficial geology at the site is characterized by fill and alluvial deposits of the Willamette River, with the alluvial deposits underlain by basalt bedrock. Fill materials generally occur from the surface to depths of approximately 20 to 30 feet below ground surface (ft bgs) along the riverbank, and consist of clayey silt to silty sand with occasional debris (including wood, brick, concrete, gravel, demolition debris, etc.). The alluvial deposits typically occur as sand, silty sands, silts, and clays. In general, the alluvium occurs in four alternating sand and silt layers; a sand layer occurs at the ground surface (Shallow Zone), underlain by a silt layer (Shallow-Intermediate Silt), which is underlain by an additional sand (Intermediate Zone) and a silty sand/sandy silt layer (Deep Zone). The sand and silt layers are continuous over most of the site. The depth of the alluvium is generally controlled by the topography

of the underlying basalt bedrock, which is present beneath the entire site and is encountered at depths ranging from approximately 50 to 90 ft bgs. The upper few feet of this basalt has been found by prior investigations to be fractured, and this fractured basalt layer provides a laterally continuous low permeability zone between the basalt bedrock and the Deep Zone.

The barrier wall will extend from above the top of the Shallow Zone to an appropriate depth that, when combined with groundwater extraction, is determined by groundwater modeling to be adequate to control migration of affected groundwater from the upland source area. Two potential barrier wall depths will be evaluated during the FFS:

- Total depth within the Deep Zone; and
- Total depth at top of fractured basalt.

Conceptual details for these barrier wall depths are shown on Figure 4.

For the Deep Zone scenario, the total depth (i.e., bottom) of the barrier wall would extend into, but not through, the Deep Zone. In general, the Deep Zone is encountered at depths ranging from 33 to 85 ft bgs and ranges in thickness from 0 to 40 ft (5 to 40 in the area of the proposed barrier wall). Preliminary data suggests that the horizontal hydraulic conductivity of the Deep Zone ranges from 0.04 to 0.3 ft/day (1.4×10^{-5} to 1.1×10^{-4} cm/sec), and is low enough to provide a suitable key-in zone for the barrier wall. The total depth of the barrier wall within the Deep Zone will be evaluated by balancing groundwater extraction rates and the cost of facilities needed to control migration of affected groundwater from the upland source area (e.g., barrier wall, groundwater extraction, and treatment system). The feasibility of this scenario will be primarily driven by the hydraulic conductivity of the Deep Zone and the associated pumping rates required to maintain hydraulic control of the upland source area.

In the event that the Deep Zone proves unsuitable as a key-in zone for the barrier wall, the total depth of the barrier wall would extend to the top of the fractured basalt layer.

EX SITU GROUNDWATER TREATMENT ALTERNATIVES

In conjunction with the barrier wall, groundwater will be extracted from pumping wells to maintain hydraulic control of affected groundwater. Table 2 summarizes the ex situ groundwater treatment technologies selected for evaluation during the FFS, along with constituents of concern (COCs) targeted for treatment. The selected technologies and COCs include the following:

- Air stripping (volatile organic compounds [VOCs]);
- Aerobic biological treatment (VOCs, semivolatile organic compounds [SVOCs], some metals);
- Anaerobic biological treatment (primarily perchlorate, but can achieve some treatment for pesticides, VOCs, SVOCs);
- Chemical oxidation (pesticides, VOCs, SVOCs);
- Chemical precipitation (metals);
- Chemical reduction (pesticides, VOCs, some metals);
- Ion exchange (perchlorate, possibly metals depending on form and concentration); and
- Liquid-phase carbon adsorption (pesticides, VOCs, SVOCs, possibly metals depending on form and concentration).

Aerobic biological treatment was not included for further consideration in the Technical Scoping Memorandum as it was not expected to be effective for many of the COCs and was thought to provide little benefit from a cost perspective for those few compounds it may effectively treat. However, aerobic biological treatment has since been included as a component of an alternate treatment process, and its effectiveness is being tested as part of ongoing groundwater treatability studies. Details regarding ongoing groundwater treatability testing are presented in *Groundwater Treatability Study Work Plan, Groundwater Source Control Interim Remedial Measures*, dated 10 April 2007.

Rather than evaluating each of these technologies individually, three ex situ groundwater treatment process train alternatives (GW-1 through GW-3) have been selected for evaluation during the FFS:

- Hydroxide Precipitation with Anaerobic Biological Treatment (Alternative GW-1);

- Iron Co-Precipitation with Anaerobic Biological Treatment (Alternative GW-2); and

- Alternate Treatment Processes (Alternatives GW-3a, GW-3b, and GW-3c).

Preliminary conceptual flow diagrams of these treatment alternatives are provided as Figures 5 through 7, respectively. Additional details for each of these alternatives are provided below and on Table 2. It should be noted that potential combinations of the three treatment process train alternatives can and will be evaluated during the FFS. Selection of the preferred treatment alternative will be driven by results of ongoing groundwater treatability studies and future pilot testing (if necessary).

Hydroxide Precipitation with Anaerobic Biological Treatment

Alternative GW-1 consists of the following treatment process train:

- Chemical Reduction/ZVI Reactor – Optional pretreatment step for reduction of chlorate loading to anaerobic bioreactors; may also be an effective pretreatment step for pesticides, VOCs, and hexavalent chromium;

- Chemical Precipitation Reactor – Removal of metals by conventional hydroxide precipitation via addition of sodium hydroxide or calcium hydroxide and/or the addition of a polymer; aeration or chemical oxidation may be included to enhance metals removal; if aeration used, off-gas will be discharged to an air emission control if required; for purposes of the FFS, it has been assumed that the solids generated by conventional hydroxide precipitation may be managed with a solids filter;

- Solids Filter – Removal of residual metal hydroxides and/or other particulates; pretreatment step for reduction of solids loading to anaerobic bioreactors;

- Fluidized/Packed Bed Reactors – Removal of perchlorate and other contaminants amenable to anaerobic biological treatment; if necessary, sulfuric acid added to lower pH of reactor influent; organic substrate and nutrients added to stimulate biological activity; two reactors in series anticipated to be required to achieve treatment goal for perchlorate; reactor media for fluidized bed reactors includes sand (FBR #1) and granular activated carbon (FBR #2); reactor media for packed bed reactors is AQUAMEND®, a specialized biocarrier offered by Adventus Americas, Inc. (Adventus) that promotes biological treatment of organics and perchlorate;

- Solids Filter – Removal of excess biomass and/or other particulates; pretreatment step for reduction of solids loading to air stripper and/or granular activated carbon;

- Air Stripper – Optional pretreatment step for reduction of VOC loading to granular activated carbon; if used, off-gas will be discharged to an air emission control if required;

- Granular Activated Carbon – Removal of residual pesticides, VOCs, and SVOCs; and

- Ion Exchange – Optional polishing step for removal of perchlorate if treatment goal cannot be consistently achieved via anaerobic biological treatment.

Iron Co-Precipitation with Anaerobic Biological Treatment

Alternative GW-2 is similar to Alternative GW-1, with the exception that iron co-precipitation (via pH adjustment, addition of ferrous sulfate, and aeration) is used as an alternative to conventional hydroxide precipitation to enhance metals removal. For purposes of the FFS, it has been assumed that iron co-precipitation will increase solids generation to the extent that an associated solids handling process (i.e., clarifier with polymer feed, sludge holding tank, filter press, and associated equipment) will be required in addition to a solids filter.

Solids handling is expected to be an issue for both conventional hydroxide precipitation and iron co-precipitation. The type(s) of solids handling equipment required for the preferred precipitation process will be selected based on the results of ongoing groundwater treatability studies and future pilot testing.

Alternate Treatment Processes

In contrast to Alternatives GW-1 and GW-2, Alternative GW-3 is based on proprietary products offered by Adventus (i.e., EHC® and AQUAMEND). EHC is a controlled-release, integrated carbon and ZVI product that promotes anaerobic biological treatment of organics, metals, and other COCs. As described previously, AQUAMEND is a specialized biocarrier that promotes biological treatment of organics and perchlorate. Packed bed reactor configurations are used for both EHC and AQUAMEND. Alternative GW-3 is further divided into three sub-alternatives (i.e., GW-3a, GW-3b, and GW-3c), which consist of the following treatment process trains:

- EHC Reactor (Alternatives GW-3a, GW-3b, and GW-3c) – Removal of pesticides, VOCs (primarily chlorinated ethenes), SVOCs, metals, and perchlorate via anaerobic biological treatment/chemical reduction; metals are removed by precipitation and adsorption to reactor media;

- Solids Filter (Alternatives GW-3a, GW-3b, and GW-3c) – Provides additional residence time to utilize excess carbon released by EHC and promote further removal of pesticides, VOCs (primarily chlorinated), SVOCs, metals, and perchlorate via anaerobic biological treatment; also used for removal of excess biomass and/or other particulates; pretreatment step for reduction of solids loading to oxygenation column (Alternative GW-3a), anaerobic AQUAMEND reactor (Alternative GW-3b), or air stripper and/or granular activated carbon (Alternative GW-3c);

- Oxygenation Column (Alternative GW-3a) – Addition of oxygen to groundwater via diffusion to increase dissolved oxygen concentrations and reduce potential generation of off-gas; effluent from oxygenation column is fed to aerobic AQUAMEND reactor;

- Aerobic AQUAMEND Reactor (Alternative GW-3a) – Removal of VOCs and residual SVOCs amenable to aerobic biological treatment;

- Anaerobic AQUAMEND Reactors (Alternative GW-3b) – Removal of residual pesticides, VOCs, SVOCs, and perchlorate via anaerobic biological treatment; organic substrate and nutrients may be added to stimulate biological activity; two reactors in series anticipated to be required to achieve treatment goals for COCs;

- Air Stripper (Alternative GW-3c) – Optional pretreatment step for reduction of VOC loading to granular activated carbon; if used, off-gas will be discharged to an air emission control if required; and

- Granular Activated Carbon (Alternative GW-3c) – Removal of residual pesticides, VOCs, and SVOCs.

TREATED GROUNDWATER MANAGEMENT ALTERNATIVES

Four management alternatives are being evaluated for treated groundwater during the FFS:

- Discharge to the Willamette River via Outfall #4 (Alternative DW-1);

- Reinjection into deep saline aquifer (Alternative DW-2);

- Reinjection into shallow aquifer via trenches and/or injection wells (Alternative DW-3); and

- Discharge to publicly-operated treatment works (Alternative DW-4).

Preliminary conceptual flow diagrams for these management alternatives are provided on Figure 8. Refer to Table 3 for basic descriptions of the individual management alternatives, along with technical and regulatory considerations. Note that discharge to the storm water sewer had been included as a separate potential management alternative for purposes of the Technical Scoping Memorandum. However, the storm water sewer is no longer considered a separate discharge alternative because discharge to the Willamette River would involve use of the storm water sewer and existing Outfall #4, and would therefore be subject to NPDES permit discharge requirements.

Selection of the preferred management alternative(s) will be generally driven by technical and regulatory considerations outlined on Table 3. Pretreatment goals and other waste handling requirements associated with groundwater treatment will be determined by ongoing development and review of applicable or relevant and appropriate requirements for the management alternatives, by communication with local publicly-operated treatment works and landfill operators, and by ongoing treatability/pilot studies to determine characteristics of any wastes anticipated. The technical feasibility of deep reinjection alternative will be further evaluated by review of published information pertaining to the deep

saline aquifer present beneath the site, while the shallow reinjection scenario can be further evaluated as part of ongoing groundwater modeling.

In addition to treated groundwater, other discharges from the treatment processes will also need to be considered, which may include dewatered solids from a chemical precipitation process and ion exchange column backwash and spent regenerant solution. Dewatered solids will likely be sent to a landfill, but the need for any post-treatment of the solids (e.g., solidification/stabilization) will also be considered during the FFS, or more appropriately as part of a field pilot study.

Tables

Table 1

Barrier Wall Construction Details
Groundwater Source Control IRM
Arkema Inc. - Portland, Oregon

Vibrated Beam Slurry Barrier Wall
• Clear surface and subsurface obstructions. • Grade excavation pad. • Excavate shallow slurry reservoir trench. • Advance excavation-slurry injection tool vertically from the surface to the target depth by jetting cement slurry through nozzles in the base of the tool. • Mix native soil and injected slurry mix in panel as the excavation-injection tool is withdrawn. • Overlap excavation-injection panels to establish continuity of the wall. • Panel strength usually adequate to support surface loads without further solidification. • Construct well-drained low-permeability cap over wall. • Provide groundwater extraction facilities to control affected groundwater flow. • Install pairs of piezometers on exterior and interior sides of the wall to monitor wall performance.
Conventional Soil-Clay Slurry Barrier Wall
• Clear surface and subsurface obstructions. • Grade excavation and slurry backfill mix pads. • Excavate trench to depth supported by clay slurry. • Mix excavation spoil, slurry, and, if necessary, imported fines to make soil-slurry backfill. • Place mixed soil-slurry backfill in slurry trench in stages that fill trench from top to bottom along sloped surface of prior slurry backfill without voids. • Stabilize upper part of backfill to support surface loads, if necessary. • Construct well-drained low-permeability cap over slurry wall. • Provide groundwater extraction facilities to control affected groundwater flow. • Install pairs of piezometers on exterior and interior sides of the wall to monitor wall performance.
Sheet Pile Barrier Wall
• Clear surface and subsurface obstructions. • Drive steel sheet piles from surface into a low permeability layer at the base of the formation using a conventional pile driver. • Connect sheets with structural sheet seal and suitable sealant that will not be negatively affected by subsurface conditions. • Cut off sheet pile below surface and construct a low-permeability cap to reduce surface infiltration. • Provide groundwater extraction facilities to control affected groundwater flow. • Install pairs of piezometers on exterior and interior sides of the wall to monitor wall performance.

Table 2

Ex Situ Groundwater Treatment Technologies and Associated Target Contaminants
Groundwater Source Control IRM
Arkema Inc. - Portland, Oregon

Target Contaminant	Selected General Ex Situ Groundwater Treatment Technologies							
	Air Stripping	**Aerobic Biological Treatment**	**Anaerobic Biological Treatment**	**Chemical Oxidation**	**Chemical Precipitation**	**Chemical Reduction**	**Ion Exchange**	**Liquid-Phase Carbon Adsorption**
	Volatile organic compounds removed from groundwater via countercurrent flow of air through perforated trays or packing media	Compounds degraded by aerobic bacteria in packed bed reactor	Compounds degraded by anaerobic bacteria in fluidized or packed bed reactor	Compounds degraded using chemical oxidants (e.g., hydrogen peroxide, ozone)	Metals removed in insoluble form (e.g., hydroxide) via pH adjustment and settling	Compounds degraded using chemical reductants (e.g., zero-valent iron, sodium metabisulfite)	Ionic compounds adsorbed on polymeric resin and replaced by innocuous ions (e.g., chloride, sodium)	Compounds adsorbed on granular activated carbon
Pesticides								
DDT, DDD, DDE			X(1,2)	X(1,2)		X(1,2)		X
Volatile Organic Compounds (VOCs)								
Benzene	X	X		X				X
Carbon Tetrachloride	X		X	X(2)		X(1,2)		X
Chlorobenzene (mono/di)	X	X(1)	X(1)	X				X
Chloroethane	X	X(1)	X(1)	X(2)				X
Chloroform	X	X(1)	X(1)	X(2)				X
Chlorinated Ethenes (PCE, TCE)	X	X(1)	X	X		X(1,2)		X
Semivolatile Organic Compounds (SVOCs)								
Fluoranthene		X(1)	X(1,2)	X				X
Pyrene		X(1)	X(1,2)	X				X
Metals								
Arsenic		X(1)			X		X(1)	X(1)
Chromium (includes hexavalent chromium)					X	X(3)	X(1)	X(1)
Other Inorganics								
Perchlorate			X				X	

Notes:

X = Technology is expected to be effective for listed contaminant. Treatability testing may still be required.

(1) = Potentially effective. Technology may require specific site conditions for effectiveness or may not be proven in the field for particular contaminant. Treatability testing would be recommended if appears to be cost effective.

(2) = Partial treatment expected. Technology would be expected to result in incomplete treatment of contaminant.

(3) = Preliminary step before additional treatment.

Blank = Technology is not expected to be effective for listed contaminant.

PCE = Tetrachloroethene

TCE = Trichloroethene

Table 3

Treated Groundwater Discharge Options
Groundwater Source Control IRM
Arkema Inc. - Portland, Oregon

Discharge Option[1]	General Description	Technical Considerations	Regulatory Considerations
Discharge to Willamette River	Treated groundwater would be discharged directly to the Willamette River via Outfall #4.	Confirm design of existing outfall adequate for anticipated discharge rate of treated groundwater.	Discharge limits under this scenario set by NPDES permit, and would require renewal of existing NPDES permit.
Reinjection in Deep Saline Aquifer	Treated groundwater would be injected into a series of deep injection wells.	Presence and depth of saline aquifer beneath site would need to be confirmed. Injection testing would be needed to assess ability of formation to accept groundwater. Well depth and installation may present technical difficulties. Fouling by solids and/or biological growth is a concern, and use of a biocide and/or periodic redevelopment of wells may be required.	Discharge option contingent upon receipt of UIC permit from ODEQ. Discharge limits likely intermediate between POTW and river options. Reinjection (shallow and/or deep) may be preferred option if POTW will not accept treated groundwater. Injection into saline deeper aquifers should result in less stringent discharge requirements (relative to shallow aquifer) for chloride.
Reinjection in Shallow Aquifer	Treated groundwater would be injected into a series of shallow injection wells, trenches, basin, or infiltration gallery.	Infiltration/injection testing would be needed to assess ability of formation to accept groundwater. Could perform testing as part of pumping tests and/or future pilot tests and discharge pumped groundwater into existing and/or new wells. May provide some benefit if it can be used in combination with pumping to maintain hydraulic control at a lower overall pumping rate. Fouling by solids and/or biological growth is a concern, and use of a biocide and/or periodic redevelopment of wells may be required. Option allows for substrate addition to reinjected water to facilitate in situ remediation of COIs.	Discharge option contingent upon receipt of underground injection control (UIC) permit from ODEQ. Discharge limits likely intermediate between POTW and river options. Reinjection (shallow and/or deep) may be preferred option if POTW will not accept treated groundwater
Discharge to POTW	Treated groundwater would be discharged to the municipal POTW sewer system.	Issues to consider include proximity of nearest discharge location and available capacity of the sewer line and down-pipe pumping stations.	Discharge option contingent upon municipality acceptance of the discharge, and further evaluation of this option is recommended. Discharge limits may be less stringent relative to reinjection and river options, as POTW pretreatment requirements will dictate the extent to which this water must be treated.

Notes:
(1) - One or combination of discharge options may be used for treated groundwater.
ODEQ = Oregon Department of Environmental Quality
POTW = Publicly operated treatment works
UIC = Underground injection control

Figures

Project No.

Date: 10/30/07

Drawn By: MLB

CAD File: G:\CAD\Drawings\Arkema-Portland\0065572\A202.dwg

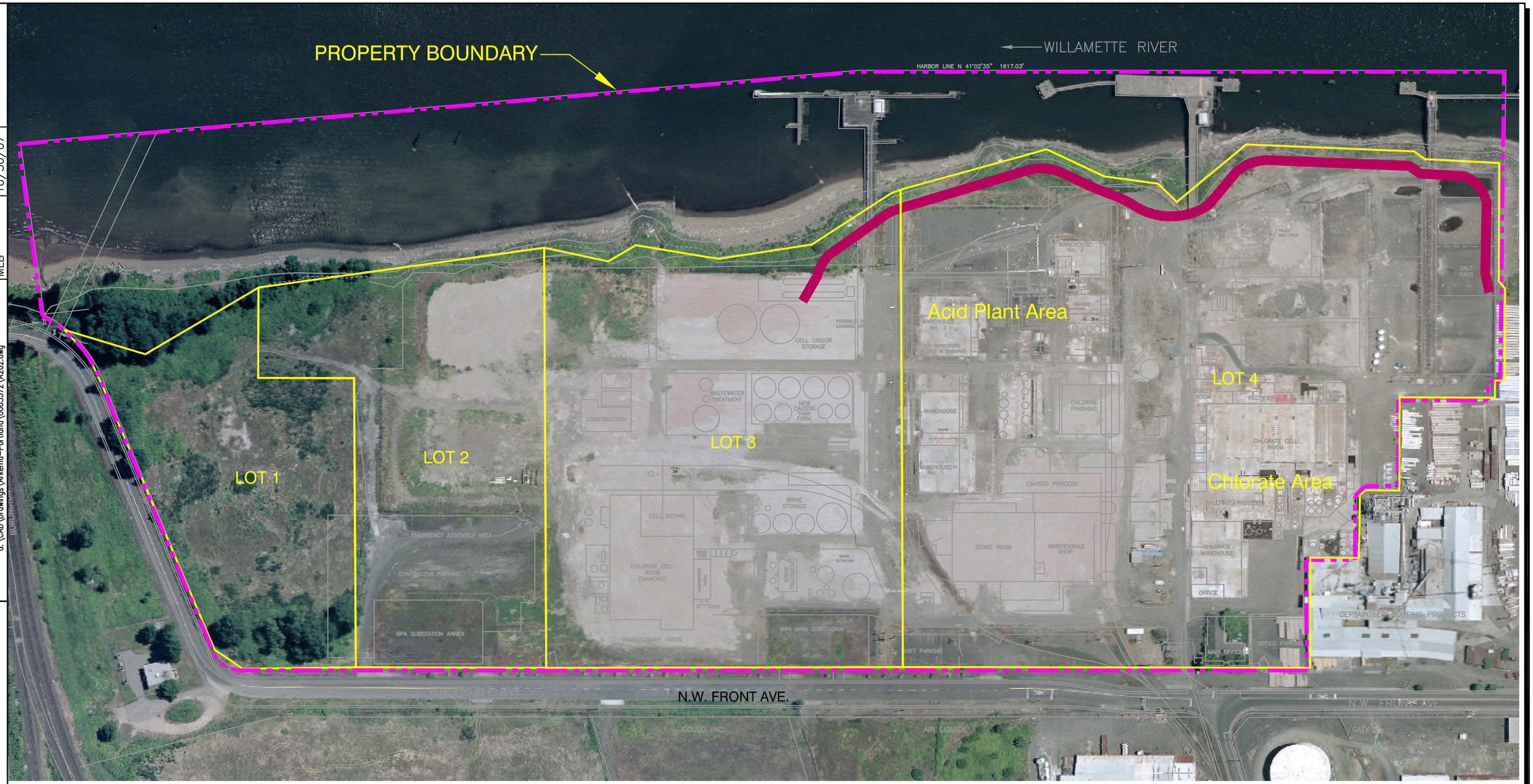

LEGEND

- Site Boundary
- Approximate Lot Boundary
- Conceptual Barrier Wall Location

TRUE NORTH

PLANT NORTH

0 200

FEET

Figure 1

Conceptual Barrier Wall Layout - Option BW - 1

Groundwater Source Control IRM

Arkema Inc.

Portland, Oregon

ERM *10/30/07*

Project No.

Date: 10/30/07

Drawn By: MLB

CAD File: G:\CAD\Drawings\Arkema-Portland\0065572\A201.dwg

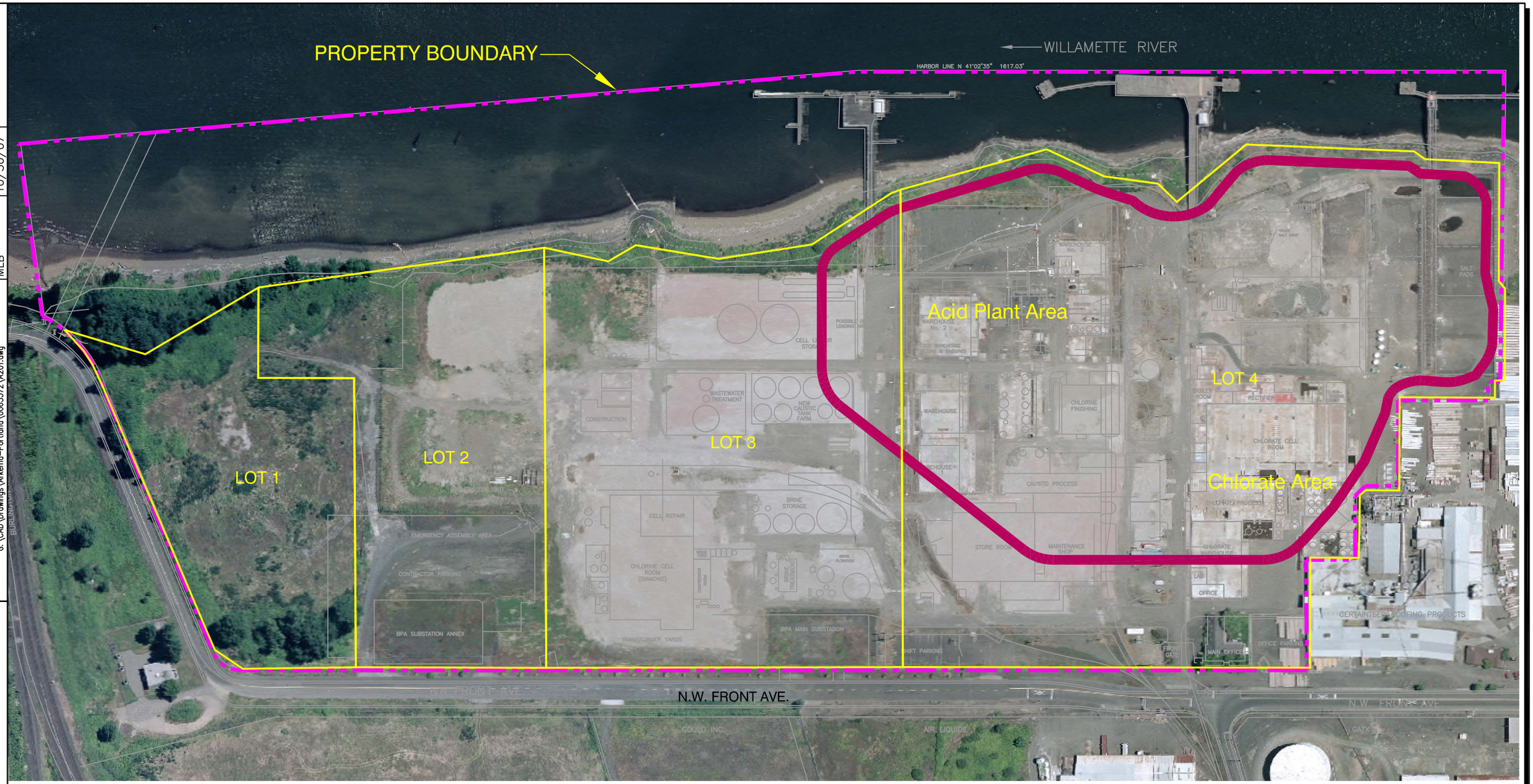

LEGEND

- Site Boundary
- Approximate Lot Boundary
- Conceptual Barrier Wall Location

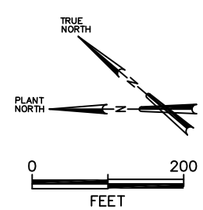

Figure 2

Conceptual Barrier Wall Layout - Option BW-2

Groundwater Source Control IRM

Arkema Inc.

Portland, Oregon

ERM *10/30/07*

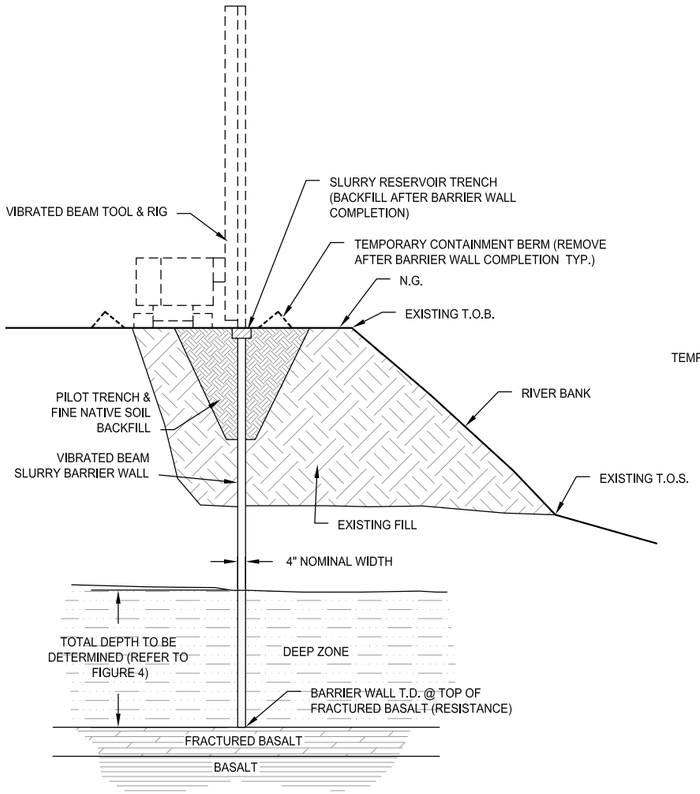

TYPICAL SECTION - VIBRATED BEAM SLURRY BARRIER WALL

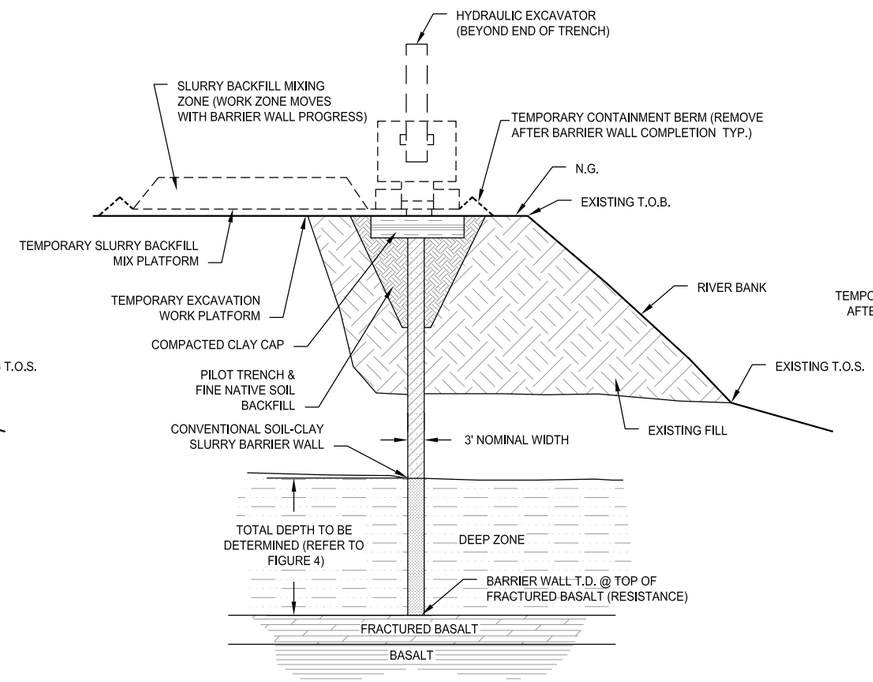

TYPICAL SECTION - CONVENTIONAL SOIL-CLAY SLURRY BARRIER WALL

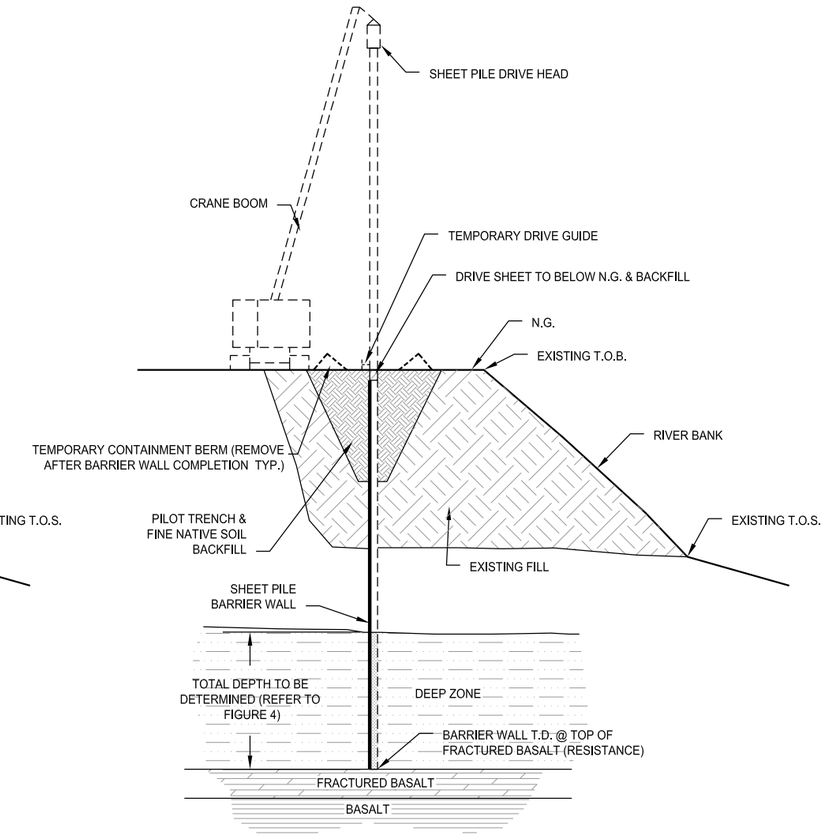

TYPICAL SECTION - SHEET PILE BARRIER WALL

LEGEND

N.G.	NATURAL GRADE
T.O.S.	TOE OF SLOPE
T.O.B.	TOP OF BANK
T.D.	TOTAL DEPTH
TYP.	TYPICAL

NOT TO SCALE

Figure 3
Conceptual Barrier Wall Details
Groundwater Source Control IRM
Arkema Inc.
Portland, Oregon

ERM *10/30/07*

CAD File: G:\CAD\Drawings\Arkema-Portland\0065572\1202.dwg
Drawn By: MLB
Date: 10/30/07
Project No.

Drawn By: EK/CU 10-22-07 rev. AP 12-20-07 Project: Arkema 0065572.01.0001

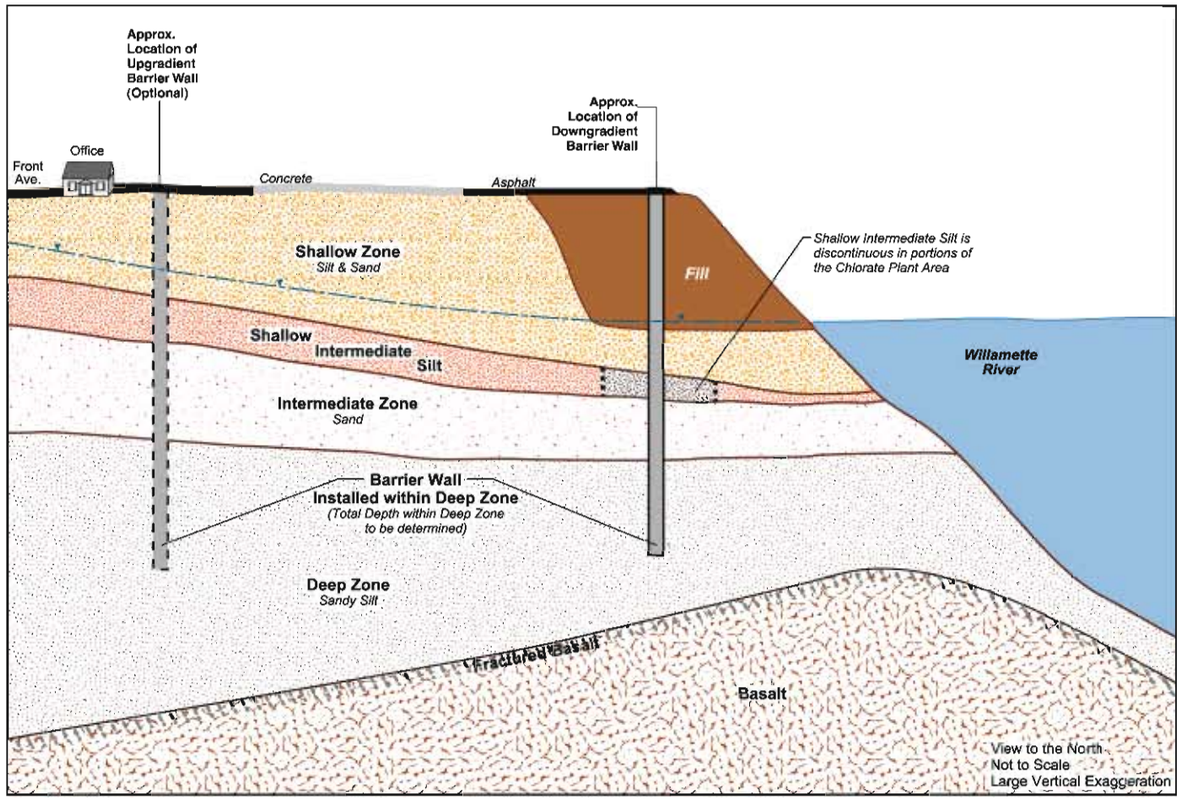

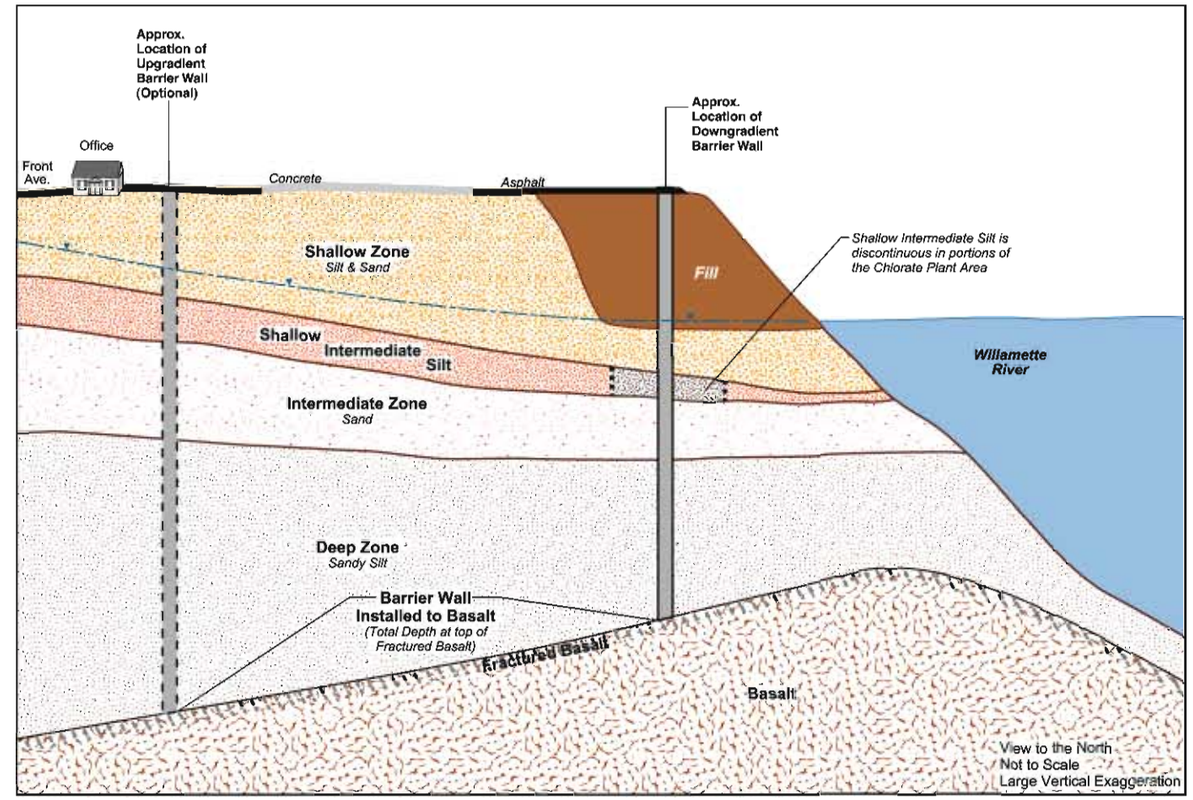

Figure 4
Conceptual Barrier Wall Depth Details
Groundwater Source Control IRM
Arkema Inc.
Portland, Oregon

ERM

Drawn By: EK/CU 10-22-07 rev. AP, EK 11-26-07 Project: Arkema 0065572.01.0001

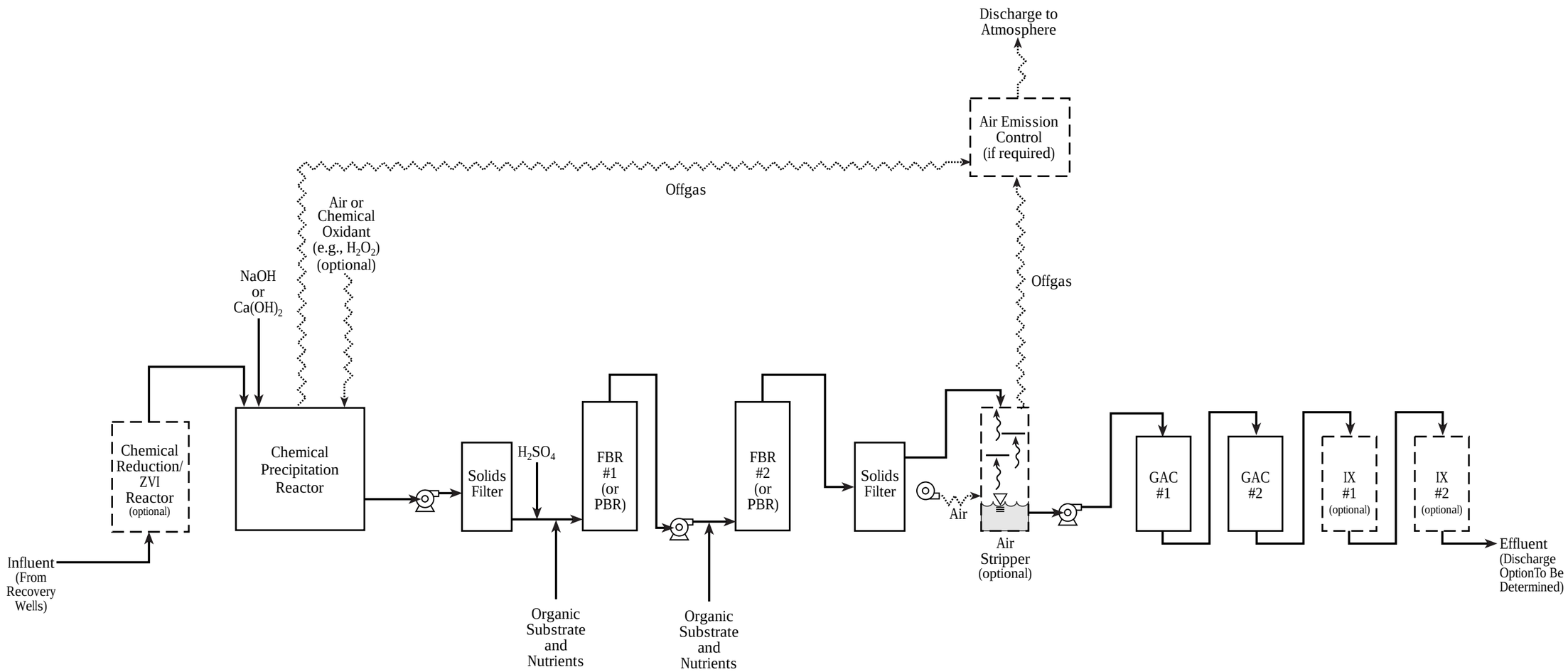

Notes:

1. Chemical reduction/ZVI reactor may be used to reduce chlorate/perchlorate loading to anaerobic bioreactors.
2. Chemical precipitation reactor may include aeration or chemical oxidation to enhance metals removal. If aeration used, offgas will be discharged to an air emission control if it is a regulatory requirement.
3. Depending on results of focused feasibility study, FBRs or PBRs may be used for anaerobic treatment of contaminants.
4. Depending on results of focused feasibility study, GAC may be used as standalone treatment option in lieu of air stripping.
5. Ion exchange may be used as a final polishing step for perchlorate removal.

LEGEND

Groundwater
Air/Offgas

ZVI - Zero-Valent Iron
FBR - Fluidized Bed Reactor
PBR - Packed Bed Reactor
GAC - Granular Activated Carbon

Figure 5
Conceptual Flow Diagram - Option GW-1
Hydroxide Precipitation with
Anaerobic Biological Treatment
Groundwater Source Control IRM
Arkema Inc.
Portland, Oregon

ERM

Drawn By: EK/CU 10-22-07 rev. AP, EK 11-26-07 Project: Arkema 0065572.01.0001

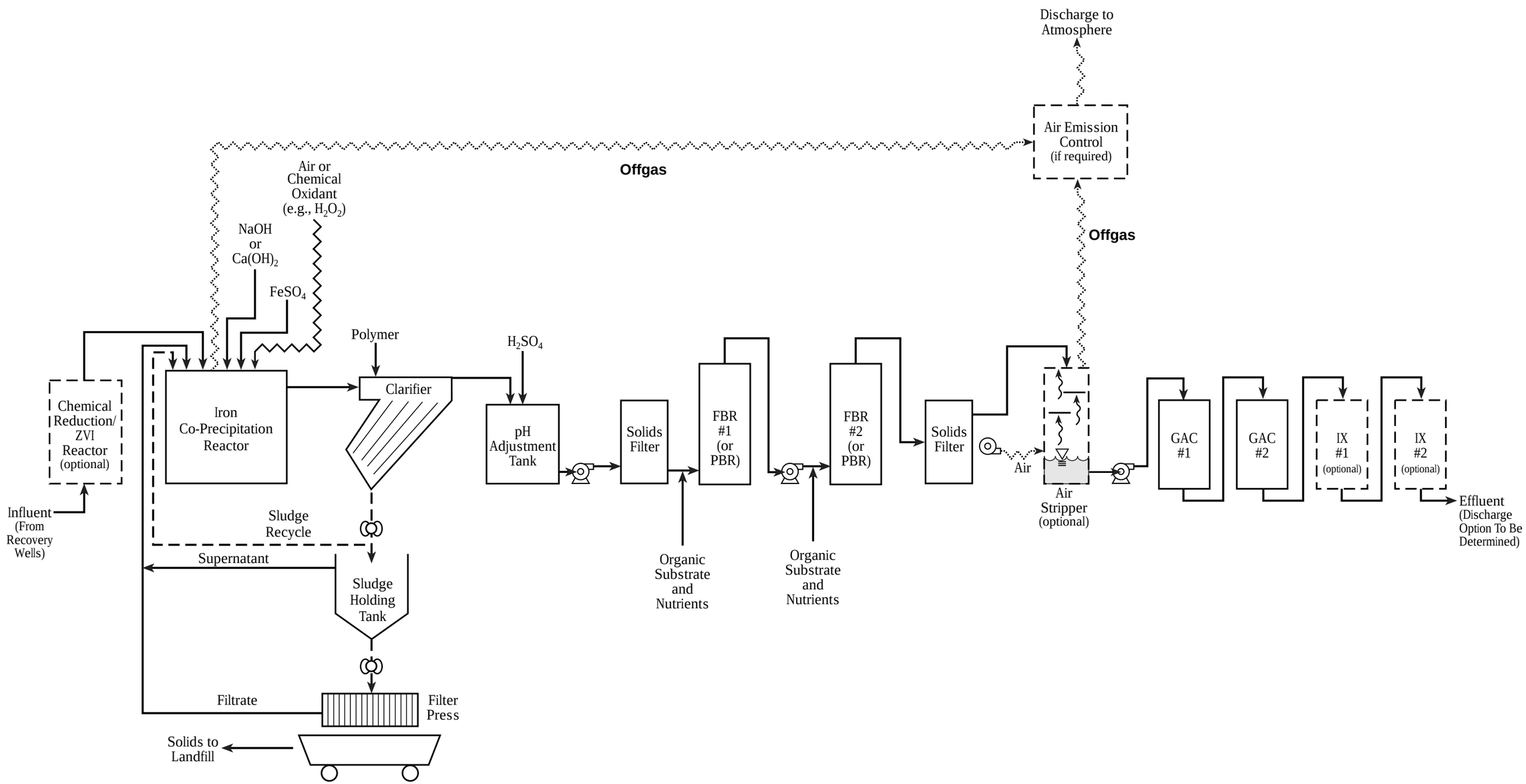

Notes:

1. Chemical reduction/ZVI reactor may be used to reduce chlorate/perchlorate loading to bioreactors.
2. Iron co-precipitation reactor will include aeration or chemical oxidation to enhance metals removal. If aeration used, offgas will be discharged to an air emission control if it is a regulatory requirement.
3. Depending on results of focused feasibility study, FBRs or PBRs may be used for anaerobic treatment of contaminants.
4. Depending on results of focused feasibility study, GAC may be used as standalone treatment option in lieu of air stripping.
5. Ion exchange may be used as a final polishing step for perchlorate removal.

LEGEND

Groundwater	**ZVI - Zero-Valent Iron**
Sludge	**FBR - Fluidized Bed Reactor**
Air/Offgas	**PBR - Packed Bed Reactor**
	GAC - Granular Activated Carbon

Figure 6
Conceptual Flow Diagram - Option GW-2
Iron Co-Precipitation with
Anaerobic Biological Treatment
Groundwater Source Control IRM
Arkema Inc.
Portland, Oregon

ERM

Drawn By: EK/CU 10-22-07 rev. AP, EK 11-26-07 Project: Arkema 0065572.01.0001

Anaerobic and Aerobic Biological Treatment (GW-3a,b)

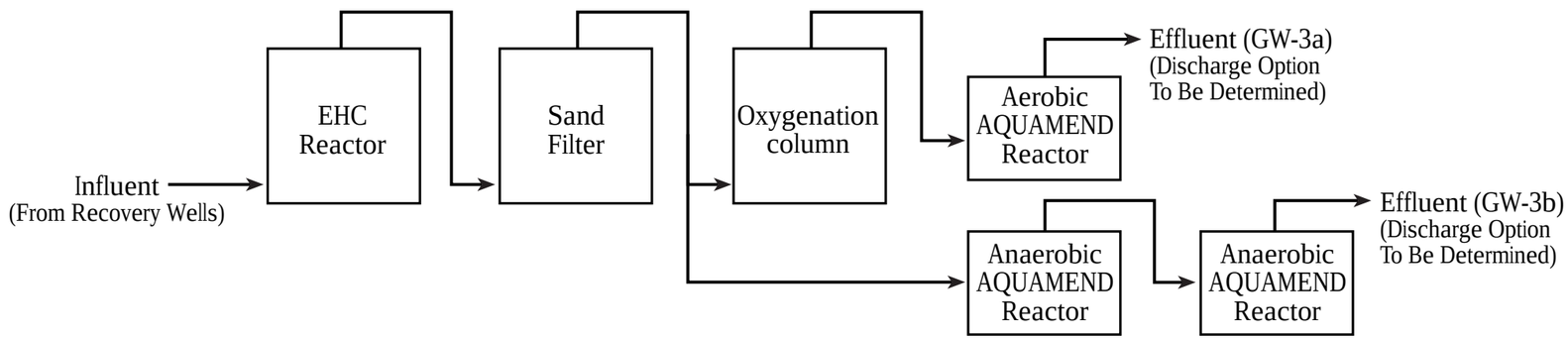

Anaerobic Biological Treatment and Carbon Adsorption (GW-3c)

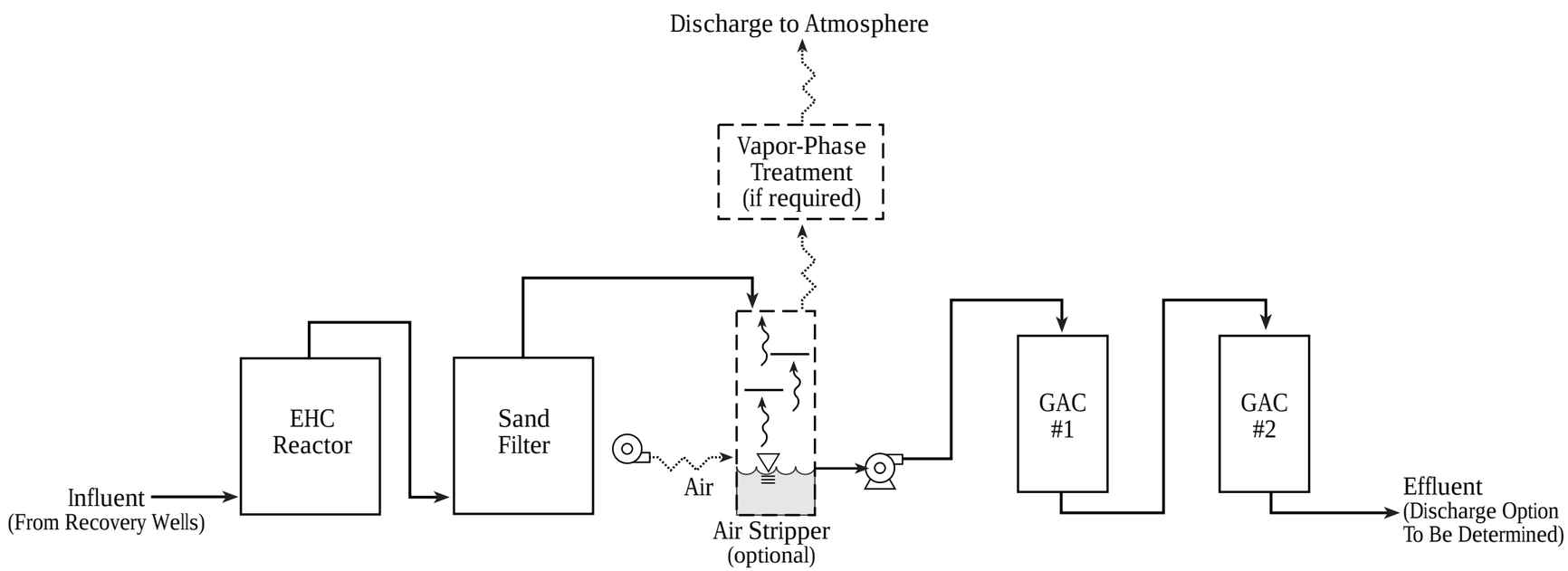

Notes:

1. EHC® is a controlled-release, integrated carbon and zero-valent iron (ZVI) product offered by Adventus that promotes biological treatment of organics and metals.
2. AQUAMEND® is a specialized biocarrier offered by Adventus that promotes biological treatment of organics.

LEGEND

Groundwater

Air/Offgas

GAC - Granular Activated Carbon

Figure 7
Conceptual Flow Diagram - Option GW-3
Alternate Treatment Processes
Groundwater Source Control IRM
Arkema Inc.
Portland, Oregon

ERM

Drawn By: EK/CU 10-22-07 rev. AP 12-20-07 Project: Arkema 0065572.01.0001

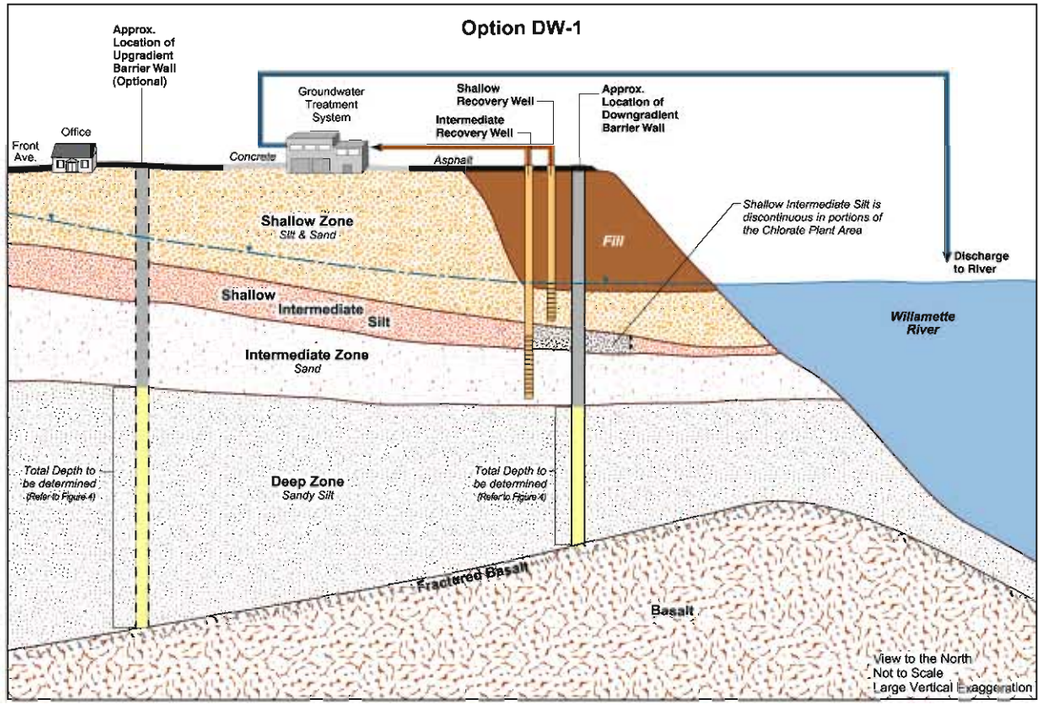

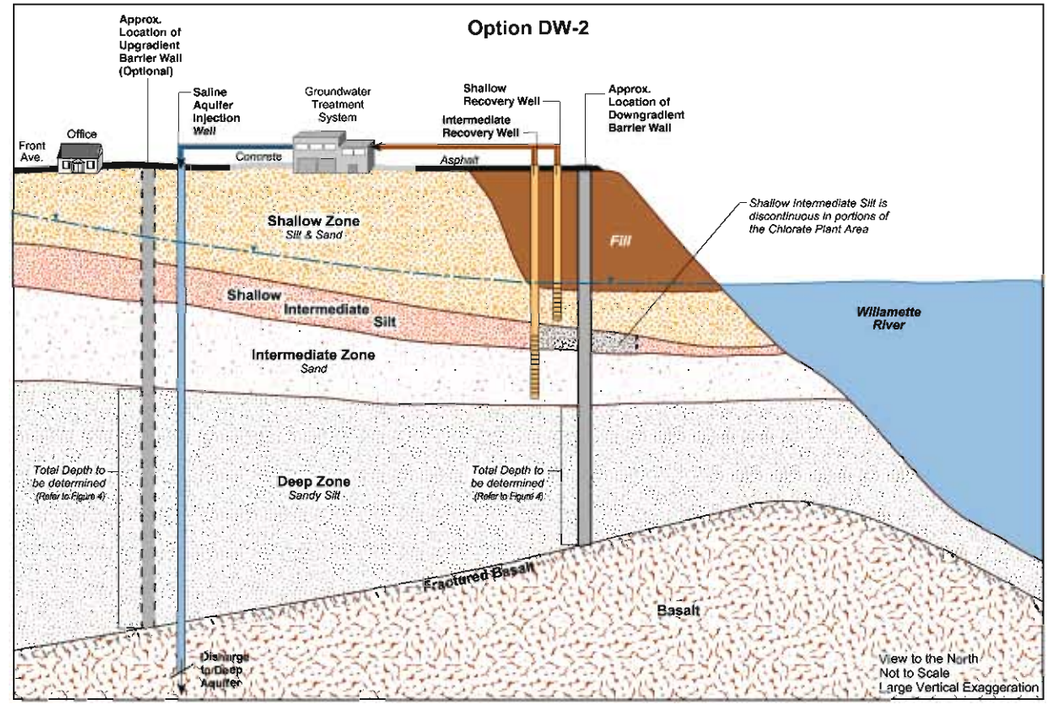

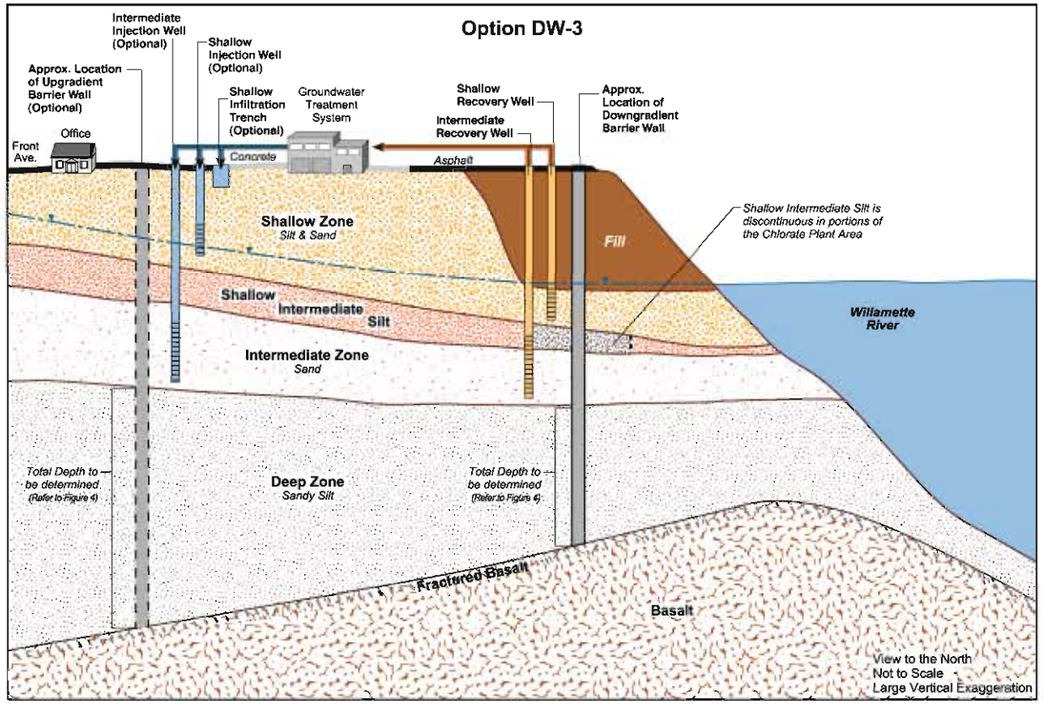

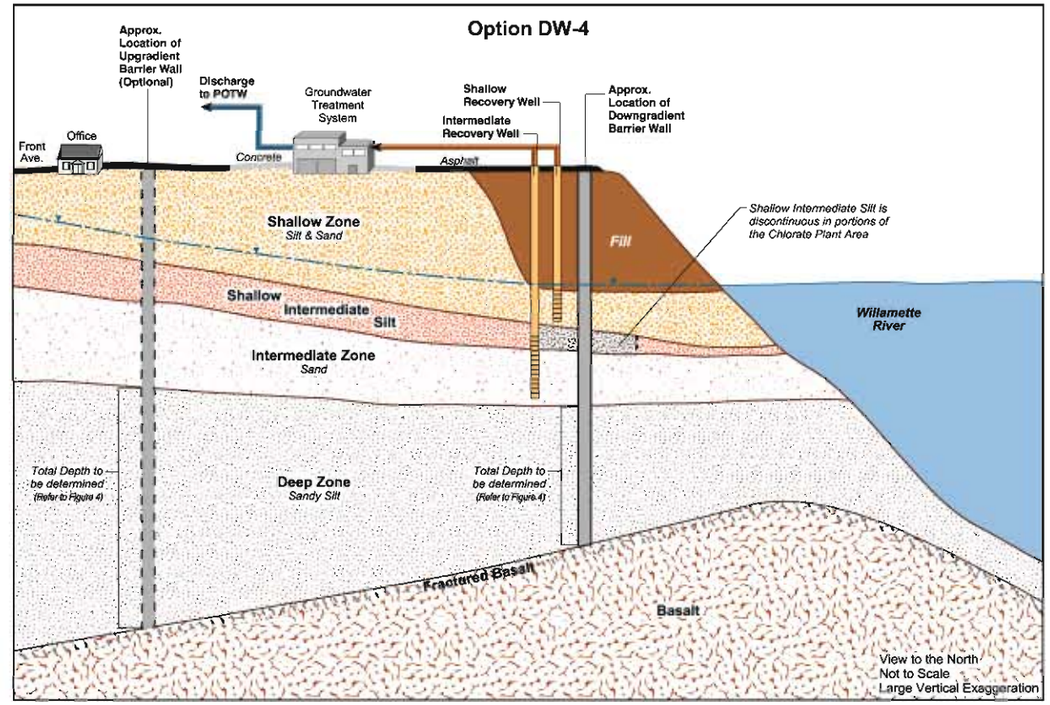

Figure 8
Conceptual Discharge Options
Groundwater Source Control IRM
Arkema Inc.
Portland, Oregon

ERM