Response Action Contract
for Remedial Response, Enforcement Oversight, and Non-Time Critical Removal Activities at Sites of Release or Threatened Release of Hazardous Substances in EPA Region VIII

U.S. EPA Contract No. EP-W-05-049

Draft Sampling and Analysis Plan for Sediment Split Sampling

Work Assignment No.:	**215-VOBB-10BX**
	Portland Harbor - Arkema
EPA RPM:	**Sean Sheldrake**
CDM Project Manager:	**Lance Peterson**

August 6, 2009

Prepared for:
U.S. Environmental Protection Agency
Region 10
1200 Sixth Avenue Suite 900
Seattle, Washington 98101

Prepared by:
CDM Federal Programs Corporation
555 17th Street, Suite 1100
Denver, Colorado 80202

THIS PAGE INTENTIONALLY LEFT BLANK

Contents

Section 1 Introduction

1.1 Objectives 1-2
1.2 Project Schedule and Deliverables 1-2

Section 2 Site Background

2.1 Project Background Information 2-1
2.2 Site History 2-2

Part I – Field Sampling Plan

Section 3 Sampling Program, Rationale, and Locations

3.1 Overall Sampling Strategy 3-1
3.2 Field Quality Assurance/Quality Control Samples 3-2

Section 4 Field Activities, Methods, and Procedures

4.1 Mobilization/Demobilization 4-1
4.2 Field Supplies 4-2
4.3 Field Documentation 4-3
4.4 Field Instrument Calibration and Maintenance 4-3
4.5 Photographic Documentation 4-3
4.6 Test and Sample Location Documentation 4-3

Part II – Quality Assurance Project Plan

Section 5 Project Management and Data Quality Objectives

5.1 Project Organization 5-1
5.1.1 Management Organization 5-1
5.1.2 Quality Assurance Organization 5-1
5.1.3 EPA Management 5-2
5.1.4 Data Assessment Organization and Responsibilities 5-2
5.2 QAPP Organization, Background, and Purpose 5-2
5.3 Project Description 5-2
5.4 Quality Objectives and Criteria for Measurement 5-3
5.4.1 Data Quality Objectives 5-3
5.4.1.1 Step 1: State the Problem 5-3
5.4.1.2 Step 2: Identify the Decision 5-3
5.4.1.3 Step 3: Identify the Inputs to the Decision 5-4
5.4.1.4 Step 4: Define the Boundaries of the Study 5-4
5.4.1.5 Step 5: Develop a Decision Rule 5-5
5.4.1.6 Step 6: Specify Tolerable Limits on Decision Errors 5-5

5.4.1.7 Step 7: Optimize the Design for Obtaining Data 5-6
5.4.2 Data Measurement Objectives 5-6
5.4.2.1 Quality Assurance Guidance 5-7
5.4.2.2 Precision, Accuracy, Representativeness, Completeness, and Comparability Criteria 5-7
5.5 Field Measurements 5-10
5.6 Laboratory Analysis 5-10
5.7 Special Training Requirements 5-11
5.8 Documentation and Records 5-11

Section 6 Measurement and Data Acquisition

6.1 Sample Process Design 6-1
6.2 Sampling Methods Requirements 6-1
6.2.1 Sampling Equipment and Preparation 6-1
6.2.2 Sample Collection, Handling, and Shipment 6-1
6.3 Sample Handling and Custody Requirements 6-2
6.3.1 Field Sample Custody and Documentation 6-2
6.3.1.1 Sample Labeling and Identification 6-2
6.3.1.2 Chain-of-Custody Requirements 6-3
6.3.1.3 Sample Packaging and Shipping 6-3
6.3.1.4 Field Logbook and Records 6-3
6.3.2 Laboratory Custody Procedures and Documentation 6-3
6.3.3 Corrections to and Deviations from Documentation 6-3
6.4 Analytical Methods Requirements 6-4
6.4.1 Laboratory Quality Assurance Program 6-4
6.5 Quality Control Requirements 6-4
6.5.1 Field Quality Control Samples 6-4
6.5.2 Laboratory Quality Control 6-5
6.5.3 Internal Quality Control Checks 6-5
6.6 Equipment Maintenance Procedures 6-5
6.7 Instrument Calibration Procedures and Frequency 6-5
6.8 Acceptance Requirements for Supplies 6-6
6.9 Data Management 6-6

Section 7 Assessment and Oversight

7.1 Assessments and Response Actions 7-1
7.1.1 Assessments 7-1
7.1.2 Response Actions 7-1
7.2 Reports to Management 7-2

Section 8 Data Validation and Usability

8.1 Data Review, Validation, and Verification Requirements 8-1

8.2 Data Quality Determinations 8-1
8.2.1 Reconciliation with Data Quality Objectives 8-1
8.2.2 Data Quality Assessment..... 8-1
8.2.2.1 Informal Data Quality Assessments 8-2
8.2.2.2 Formal Data Quality Assessments 8-2

Section 9 References

Appendices

Appendix A CDM Federal Standard Operating Procedures
Appendix B EPA Contract Laboratory Program Guidance for Field Samplers

Figures

2-1 Reproduced from Arkema Work Plan - Proposed Sediment Sampling Locations

Tables

2-3 Reproduced from Arkema Work Plan - Proposed Sediment Chemistry Boreholes, Analyses, and Rationale
3-1 Split Samples Locations
3-2 Arkema Split Sampling Sediment Analyses
5-1 Analytical Parameters, Methods, Containers, Preservation, and Holding Times
5-2 EPA Analytical Concentration Goals (ACGs), Modified Analytical Requests and LSS Comparisons

Acronyms

ACG	Analytical Concentration Goals
BNSF	Burlington Northern Santa Fe
CAR	Corrective Action Request
CDM	Camp Dresser & McKee Inc.
CLP	Contract Laboratory Program
COI	Chemical of Interest
CRQL	Contract Required Quantitation Limits
D	dimensional
DDD	dichloro-diphenyl-dichloroethane
DDE	dichloro-diphenyl-dichloroethylene
DDT	dichloro-diphenyl-trichloroethane
DDx	sum of DDT, DDD, and DDE isomers
DQOs	data quality objectives
EDD	electronic data deliverables
EE/CA	Engineering Evaluation/Cost Analysis
EPA	U.S. Environmental Protection Agency
EVS	Environmental Visualization System
FSP	Field Sampling Plan
ISA	initial study area
LCS	laboratory control samples
LSS	Legacy Site Services
LWG	Lower Willamette Group
LWR	Lower Willamette River
MDL	method detection limits
mg/kg	milligrams per kilogram
MSs	matrix spikes
MSDs	matrix spike duplicates
NFG	National Functional Guidelines
NTCRA	Non-Time-Critical Removal Action
ODEQ	Oregon Department of Environmental Quality
OVM	organic vapor meter
PARCC	precision, accuracy, representativeness, completeness, and comparability
PCB	Polychlorinated Biphenyl
PCDD/F	Polychlorinated Dibenzodioxin/Furan
%R	percent recovery
PID	photoionization detector
PM	Project Manager
ppm	parts per million
PRP	potentially responsible party
QAPP	Quality Assurance Project Plan
QA/QC	Quality Assurance/Quality Control

RAA	Removal Action Area
RM	River Mile
RPD	relative percent difference
RPM	Remedial Project Manager
RSD	relative standard deviation
SA	Study Area
SAP	Sampling and Analysis Plan
Site	Portland Harbor - Arkema Site
SLV	Screening-Level Value
SOP	Standard Operating Procedure
SOW	Statement of Work
SVOC	Semivolatile Organic Compounds
VOC	Volatile Organic Compound

Section 1
Introduction

Under Work Assignment 215-VOBB-10BX from U.S. Environmental Protection Agency (EPA), under EPA Region 8, Response Action Contract No. EP-W-05-049, Camp Dresser & McKee Inc. (CDM) was assigned to conduct removal oversight at the Portland Harbor - Arkema Site (Site) located in Portland, Oregon. Activities at the Site are being conducted by the potentially responsible party (PRP) in accordance with the Arkema Early Action Engineering Evaluation/Cost Analysis (EE/CA) Work Plan, prepared by Parametrix for EPA dated May 11, 2007, and the Arkema Early Action EE/CA Work Plan Addendum, prepared by Integral Consulting Inc. for Legacy Site Services, LLC (LSS) an agent for Arkema Inc. on July 22, 2008 (with conditional approval letters).

CDM will provide technical field oversight of the sampling effort and collect split samples in areas of interest, to provide an independent verification of sampling and analysis performed by LSS and, ultimately, to provide an independent opinion on whether an appropriate remedial action area (RAA) is selected. The fieldwork described herein involves split sampling for sediment collection. This document serves as the Sampling and Analysis Plan (SAP) that will guide data collection activities.

The purpose of this SAP is to describe the sampling objectives, locations, measurement methods, project schedule, and quality assurance (QA) requirements for sampling and field investigation activities supporting the sampling oversight. The SAP is organized into a field sampling plan (FSP) and quality assurance project plan (QAPP) as follows:

- Section 1 – Introduction
- Section 2 - Site Background

Part 1: Field Sampling Plan

- Section 3 - Sampling Program, Rationale, and Locations
- Section 4 - Field Activity Methods and Procedures

Part 2: Quality Assurance Project Plan

- Section 5 - Project Management and Data Quality Objectives
- Section 6 - Measurement and Data Acquisition
- Section 7 - Assessment and Oversight
- Section 8 - Data Validation and Usability
- Section 9 – References

- Appendix A - Standard Operating Procedures
- Appendix B - Contract Laboratory Program Guidance to Field Samplers

The QAPP, part II of this SAP, conforms to EPA's QA/R-5 QAPP requirements for quality assurance project plans (EPA 2001).

1.1 Objectives

The intent of this investigation is to collect data to support the following objectives for the Site:

- Characterize the extent of chemical contamination in sediments to support a non-time critical removal action by the PRP
- Provide oversight and technical support to the EPA to provide an independent assessment of the two dimensional (2D) and three dimensional (3D) RAA boundary selection
- Collect data for tributyl tin to determine if concentrations of this contaminant of interest impact selection of the 3D RAA boundary
- Collect split sample data from waste characterization borings for analysis of asbestos to confirm the PRP's results

CDM will provide field sampling oversight, on behalf of EPA, for the LSS data collection program in support of the EE/CA. Activities will include oversight of the field sampling and split sample collection at specific areas of interest. CDM field personnel will observe methods and procedures for conformity to the plans and standard practices. Any unusual circumstances or poor sampling practice will be reported immediately to the EPA Remedial Project Manager (RPM). The sediment sampling event will take approximately six weeks to complete. CDM will follow the health and safety plan in PRP's work plan and QAPP.

CDM will coordinate and schedule analyses of the split samples through the EPA Contract Laboratory Program (CLP).

1.2 Project Schedule and Deliverables

The split sampling activities described in this SAP are anticipated to be completed during August and September 2009. A technical oversight report will be submitted to summarize observations and activities in the field as well as a data evaluation report of the split sampling data for comparison with the PRP results.

Section 2
Site Background

2.1 Project Background Information

Site background is described in the Arkema Early Action EE/CA Work Plan, May 11, 2007 and the Work Plan Addendum dated July 22, 2008, which modifies and updates the May 11, 2007 Work Plan. The two documents together, along with the two conditional approval letters, comprise the final EE/CA work plan for the Site and will be referred to in this SAP as the Arkema Work Plan that will be used by the PRP to complete the EE/CA site characterization.

The Arkema property is located on the southwest bank of the lower Willamette River (LWR) between river miles (RMs) 6.9 and 7.6, immediately upstream of the Burlington Northern Santa Fe (BNSF) Railroad Bridge. The property is located within Portland Harbor, which was designated a federal Superfund site by EPA in 2000 based on sediment contamination. The initial study area (ISA) of the Portland Harbor Superfund site encompasses about 5.7 miles of the Willamette River from approximately the southern tip of Sauvie Island at RM 3.5 to the southern end of Swan Island at RM 9.2. The current study area (SA) encompasses about 9.5 miles, from approximately RM 2.0 to RM 11.5, enlarged to include the ISA and areas both upstream and downstream. The Lower Willamette Group (LWG), a consortium that includes the Port of Portland, the City of Portland, and private industry, has been working to complete a remedial investigation (RI) of the SA. Neither the ISA nor the SA defines the Superfund site; the boundaries of the Site will be determined upon issuance of the Record of Decision.

The Arkema Work Plan describes the Chemicals of Interest (COIs), which include, for the purposes of this field sampling effort, organochlorine pesticides, polychlorinated biphenyls (PCBs), semi-volatile organic compounds (SVOCs), volatile organic compounds (VOCs), tributyl tin, and polychlorinated dibenzo-p-dioxins and furans (PCDD/Fs). The organochlorine pesticides 2,4' and 4,4', isomers of dichloro-diphenyl-trichloroethane (DDT) as well as degradation byproducts dichloro-diphenyl-dichloroethylene (DDE) and dichloro-diphenyl-dicloroethane (DDD), are referred to collectively as "DDx".

The primary objective of the EE/CA characterization activities is to fill data gaps to identify the 5 milligrams per kilogram (mg/kg) DDx RAA horizontal isocontour as cited in the May 23, 2008 Final Decision on Disputes from Dan Opalski, Director, Office of Environmental Cleanup (Opalski Decision) and identify the vertical extent of COI contamination to screening level values (SLVs) or the bedrock surface, to define the area of contaminated sediments that will be addressed by the EE/CA. Vertical delineation of the various COIs is required to Analytical Concentration Goals (ACGs), as defined by EPA on Table 5.2, shown below. The applicable ACGs for the Arkema COIs are shown below.

Analytical Concentration Goals (ACGs) for Arkema COIs

Chemical of Interest	Analysis Group	Sediment ACG (µg/kg)	Comment
DDX	Organochlorine Pesticides	0.04	
Total PCBs	PCB Aroclors	0.048	
Total chlordanes	Organochlorine Pesticides	0.046	Based on Chlordane
Hexachlorobenzene	SVOCs	2.3	
Lindane	Organochlorine Pesticides	0.005	
Tributyltin	Tributyltin	10	
TCDD Equivalents	Dioxins and Furans	See Table 5.2	Based on 2,3,7,8-TCDD

Specific site maps can be found in the Arkema May 2007 work plan. Specific sample location maps have not been generated for this SAP, as the focus of this work is to collect split samples from the sediment borings sampled by the PRP.

2.2 Site History

A Site history can be found in the Arkema Early Action EE/CA Work Plan, May 11, 2007.

Part 1: Field Sampling Plan

THIS PAGE INTENTIONALLY LEFT BLANK

Section 3
Sampling Program, Rationale, and Locations

Sections 3 and 4 of this SAP comprise the FSP for the sampling activities. An overview of the sediment sampling activities is provided in this section, while field activities and procedures are discussed in Section 4.

3.1 Overall Sampling Strategy

LSS will be conducting sediment sampling beginning in August 2009. The overall sampling strategy for the EE/CA investigation is to define the RAA boundary, both horizontally and vertically as stated in Section 2. CDM will collect split samples for confirmation of the 5 mg/kg DDx horizontal contour assessment. Select split samples will also be collected for the expanded COI analyte list to confirm vertical delineation. The sample collection depths have been assessed through computer analysis of data using Environmental Visualization System (EVS) software.

CDM will conduct all the split sampling data collection, manage and review data, and prepare a measurement report synthesizing the results of data acquisition. Specific roles and responsibilities for CDM are presented Section 5.

CDM will be onsite with the LSS sampling team for collection of the split samples. The field program is designed around three types of sediment borings. The 37 proposed borings included three boring types, which are waste characterization, vertical, and horizontal characterization borings as shown on the attached Figure 2-1 from the Arkema Early Action EE/CA Work Plan Appendix A Field Sampling Plan, dated May 15, 2009 (Integral Consulting Inc. 2009a). Table 2-3 is also a reproduction from the Arkema FSP. It provides a description of all borings proposed for the LSS sampling in support of the EE/CA, the rationale for these borings, and the analyses that will be performed on these samples by LSS. Chemical analysis of split samples will provide analytical data from each of the three boring types. The split samples to be collected are summarized below and shown in Table 3-1. Note as shown on Table 3-1, for every sample collected, an 8 ounce wide mouth glass bottle filled with sediment will be collected to be archived by the EPA for later analysis if desired. Table 3-2 describes the analytical tests to be performed on each of the split samples collected.

- **Waste Characterization Borings:** Soil borings WB-35 and WB-42 are proposed for split sampling because they are in the heart of the plume and are in areas where the deepest sediment is observed. Three discrete and two composite samples will be collected at each boring (six discrete and four composites total). The discrete split samples will be obtained in the zone below the bottom composite and near the expected bedrock interface. The discrete sample collection depths are shown on Table 3-2. As described in Table 2-3, LSS will be collecting two composite samples; that have internal ranges from 6 to 10 feet in length. CDM will collect a split sample

from the lower composite for the analysis of SVOCs, PCBs, dioxins/furans, tributyl tin, VOCs, and a full suite of organochlorine pesticides. Both the upper and the lower composite sample will be analyzed for asbestos. The discrete samples will be analyzed for SVOCs, PCBs, dioxins/furans, tributyl tin, VOCs, and a full suite of organochlorine pesticides.

- **Vertical Characterization Borings:** Split samples will be obtained from soil borings WB-30 and WB-49 because they are near the upstream and downstream ends of the nominal 5 mg/kg DDx plume, as defined using 15 anisotrophy, and are located in areas where the sediment is relatively deep. Three split samples will be obtained from WB-30 and WB-49 (six samples total). One split sample will be obtained from the sediment surface; one in the mid-point between the sediment surface and bedrock, and one near the anticipated bedrock interface. The samples will be analyzed for SVOCs, PCBs, dioxins/furans, tributyl tin, VOCs, and full suite of organochlorine pesticides. The sample collection depths shown on Table 3-2.

- **Horizontal Characterization Borings:** Three split samples will be obtained from each of eight borings for a total of 24 discrete horizontal characterization samples. The borings selected for split sampling include (from south to north on Figure 2-1) WB-56, WB-34, WB-40, WB-60, WB-51, WB-63, WB-66, and WB-65. The horizons from which the split samples will be collected are shown on Table 3-2. The deepest sample from each boring will be analyzed for SVOCs, PCBs, dioxins/ furans, tributyl tin, VOCs, and full suite of organochlorine pesticides. The samples of the first two discrete depths will be analyzed for organochlorine pesticides only.

3.2 Field Quality Assurance/Quality Control Samples

QA/QC samples will include two field duplicate samples if sample volume is sufficient. Extra sample volume will be submitted for the analysis of matrix spikes (MSs) and matrix spike duplicates (MSDs). Trip blanks will be included in coolers containing samples for volatile organic compound (VOC) analysis. Duplicates and extra volume for matrix spikes will not be collected for dioxin/furan or asbestos analyses. The number of QA/QC samples to be collected during the field effort is described in Section 6.5.1.

Section 4
Field Activities, Methods, and Procedures

The following is a summary of field activities that will be performed by CDM personnel for the EE/CA split sampling:

- Mobilization/Demobilization
- Field documentation of PRP sampling procedures
- Photographic documentation
- Sample location documentation
- Sediment split sample collection

The following subsections reference CDM standard operating procedures (SOPs) that will be followed. The SOPs applicable to this investigation include the following:

- Sample Custody (SOP 1-2)
- Packaging and Shipping Environmental Samples (SOP 2-1)
- Field Logbook Content and Control (SOP 4-1)
- Photographic Documentation of Field Activities (SOP 4-2)

All of these SOPs are included in Appendix A.

4.1 Mobilization / Demobilization

Prior to the mobilization for field activities, a field-planning meeting will be conducted by the CDM project manager (PM) and attended by the field staff and a member of the CDM QA staff. The agenda will be reviewed and approved by the QA staff prior to the meeting. The meeting will briefly discuss and clarify:

- Objectives and scope of the fieldwork
- Equipment and training needs
- Communication requirements
- Field operating procedures, schedules of events, and individual assignments
- Required QC measures
- Documents governing field work that must be on site
- Health and safety

A written agenda, reviewed by the CDM QA staff, will be distributed and an attendance list signed. Copies of these documents will be maintained in the project files. Additional meetings will be held when the documents governing fieldwork require it or when the scope of the assignment changes significantly.

The field team personnel will perform the following activities before initiating sample collection:

- Review and understand the SAP (comprised of this FSP and QAPP) and Arkema FSP and QAPP (Appendices A and B of the Work Plan Addendum)

- Review and understand the Site health and safety plan (HASP) (see Appendix C of the Arkema Work Plan Addendum) to determine health and safety protocols for performing Site work
- Ensure that all sample analyses are scheduled through designated EPA/CDM laboratories
- Obtain required sample containers and other supplies
- Locate overnight shipping service (FedEx or equivalent) and/or laboratories, and note hours-of-operation
- Obtain and check field supplies, including personal protective equipment (PPE)

4.2 Field Supplies

A preliminary list of supplies that will be required for the EE/CA split sampling is presented in Table 4-1. All sample containers will be precleaned and traceable to the facility that performed the cleaning.

Table 4-1 Field Supplies

GENERAL SUPPLIES	
8 ounce wide mouth glass bottles	2 ounce wide mouth glass bottle with septa for VOAs
SAP	
Site maps and aerial photos	Laptop computer (with Forms II Lite)
Pens, Sharpies, extra fine point markers	Printer
Field logbooks (Rite in the Rain Environmental)	
Ice	
Digital camera	Paper towels
FedEx shipping labels	Garbage bags
Ice chests	Bubble wrap
Sample container labels for Forms II Lite	Scissors
Tape - clear, duct, and strapping	
Ziploc bags	
Custody seals	
Blank sample container labels – print in field using Forms II Lite	
HEALTH AND SAFETY SUPPLIES	
First aid kit	
Steel-toed boots	
Latex gloves	
Cellular telephone	
Safety glasses	

4.3 Field Documentation

Information and notations will be recorded as required in the applicable field logbook in accordance with CDM's SOP 4-1, Field Logbook Content and Control (Appendix A).

4.4 Field Instrument Calibration and Maintenance

Field equipment will not be required for split sample collection.

4.5 Photographic Documentation

Photographs will be taken at each sample location and at any place that the field team determines necessary. These photographs will be taken in accordance with CDM's SOP 4-2, Photographic Documentation of Field Activities (Appendix A).

4.6 Test and Sample Location Documentation

Test locations (sediment core locations) will be located primarily through the use of a GPS unit operated by the LSS field team. LSS will conduct sediment borings with CDM oversight and documentation.

The total number of split samples is 38, which constitutes approximately 11 percent of the 346 samples estimated for collection based on the Arkema FSP. Table 3-2 describes the borings that will be sampled and the analyses that will be requested for each sample. Extra samples may be scheduled through the CLP to allow for opportunistic sample collection if desired, based on odors, sample discoloration, elevated photoionization detector (PID) readings, or other reason to conduct additional sampling.

THIS PAGE INTENTIONALLY LEFT BLANK

Part 2: Quality Assurance Project Plan

THIS PAGE INTENTIONALLY LEFT BLANK

Section 5
Project Management and Data Quality Objectives

This QAPP, (Part 2 of the SAP) was prepared in accordance with EPA QA/R-5 requirements for preparing QAPPs (EPA 2001a). This section of the QAPP addresses project management, including the project organization, background and purpose, project description, quality objectives and criteria, special training, and documentation and records.

5.1 Project Organization

Organization and responsibilities specific to this study are discussed in this section. CDM will provide the necessary technical and field staff to monitor the sampling and reporting aspects of the project. Analytical services are provided through the EPA. Table 5-2 lists the compounds, CLP Statement of Work (SOW) contract required quantitation limits (CRQLs), target quantitation limits and analytical methods that will be requested.

CDM will be working directly with LSS during the collection of the split samples. CDM will have two scientists on the field team. The field team leader will be an environmental scientist with extensive sediment sampling experience to lead in conducting oversight and documentation, and to assist in split sample collection. It is assumed that this person will be on site for the first week of the field effort to guide and assist in establishing a successful field program. In addition, there will be a second environmental scientist, also with sediment sampling experience, that will be present for the collection of all split samples.

5.1.1 Management Organization

CDM is a RAC contractor to EPA and is supporting EPA's activities at the Site. EPA management is described in Section 5.1.3. The CDM PM for this project is Mr. Lance Peterson. The CDM field team leader is yet to be determined.

Mr. Peterson, as PM, is responsible for the overall management and coordination of the investigation. These responsibilities are discussed in the RAC QMP (CDM 2005a). The field team leader is responsible for day-to-day activities while in the field. The field team leader will coordinate with the PM for direction on any major changes in the field. A second team member will assist the field team leader with sampling activities, shipment, and overall documentation.

5.1.2 Quality Assurance Organization

CDM's QA director, Mr. Doug Updike, implements the QA program. He is independent of the technical staff and reports directly to the president of CDM on QA matters. The QA director has the authority to objectively review projects and identify

problems, and the authority to use corporate resources, as necessary, to resolve any quality-related problems.

The QA coordinator for this project, Ms. Kim Zilis, reports to Mr. Updike on QA matters. Under Mr. Updike's oversight, Ms. Zilis and Mr. Peterson are responsible for day-to-day QA activities as discussed in the RAC QMP (CDM 2005a).

5.1.3 EPA Management

The EPA Project Officer is responsible for tracking the work assignment budget, approving work plans, and maintaining communication with the EPA RPM and CDM contract personnel.

The EPA RPM, Mr. Sean Sheldrake, is CDM's primary contact for coordinating work at the site. Mr. Sheldrake is responsible for the overall EPA management and coordination of this investigation with Department of Environmental Quality (DEQ).

5.1.4 Data Assessment Organization and Responsibilities

Split sampling data will be reviewed for data quality and completeness. The data quality reviewer will be responsible for performing quality evaluation of the laboratory data as discussed in Sections 6 and 8. The data quality reviewer will be responsible for verifying the accuracy of hard copy versus electronic data deliverables (EDD) received from the laboratory and for the accuracy of any data tables prepared from these results.

5.2 QAPP Organization, Background, and Purpose

This QAPP is organized in accordance with requirements for quality assurance for project plans, EPA QA/R-5 March 2001 (EPA 2001). This section (Section 5) presents project management and introductory information, Section 6 provides guidance for measurement and data acquisition, Section 7 describes assessment and oversight aspects of the project, and Section 8 details data validation and usability issues. References are provided in Section 9.

Project background and information for the Site is provided in Section 2 of this SAP. The objective of the investigation is discussed in Section 1.1 of this SAP. The purpose of this QAPP is to provide guidance to ensure that all environmentally related data collection procedures and measurements are scientifically sound and of known, acceptable, and documented quality and conducted in accordance with the requirements of the project.

5.3 Project Description

A description of this project is provided in Section 1 of this SAP. Samples will be analyzed for parameters listed in Tables 5-1 through 5-3. Sampling activities and all associated procedures are described in detail in this SAP.

5.4 Quality Objectives and Criteria for Measurement

This section provides internal means for control and review of the project so that environmentally related measurements and data collected are of known and acceptable quality. The subsections below describe the data quality objectives (DQOs) (Section 5.4.1) and data measurement objectives (Section 5.4.2).

5.4.1 Data Quality Objectives

The DQO process is a series of planning steps, based on scientific methodology, designed to ensure that the type, quantity, and quality of environmental data used in decision-making are both adequate and appropriate for their intended purposes. EPA has issued guidelines to help data users develop site-specific DQOs (EPA 1994), which were used to establish DQOs for field oversight and split sampling.

5.4.1.1 Step 1: State the Problem

The purpose of this step is to describe the problem to be studied so that the focus of the study will be unambiguous.

A historic release of DDT occurred between Docks 1 and 2 at the Site located adjacent to the Willamette River in Portland, Oregon. The primary objective of the EE/CA characterization activities is to fill data gaps in order to further refine the 5 mg/kg DDx horizontal RAA boundary, and to identify the nature and extent of COIs vertically, to SLVs or the bedrock surface, such that the final RAA can be defined for EE/CA evaluation pursuant to a non-time critical removal action (NTCRA) by the PRP.

Other COIs include lindane and chlordane, PCB aroclors, hexachlorobenzene, tributyl tin, and chlorinated dioxins/furans, all of which have historically been reported at concentrations above the SLVs for sediment.

The horizontal boundary of the RAA was set at 5 mg/kg total DDx (Opalski 2008). Once the horizontal RAA boundary is established, the vertical extent of the area that will be addressed by the EE/CA will be defined by COI concentrations using both historical data and data collected during implementation of the Arkema FSP.

The scope of the problem defined in this QAPP is the need to establish confidence in defining the RAA. CDM will provide oversight, additional COI data, split sample data confirmation, and an independent data evaluation to provide an independent assessment of the PRP's data and characterization of the Site.

5.4.1.2 Step 2: Identify the Decision

Decisions will be made to establish the RAA boundary based on Site characterization sampling. LSS will be sampling the study area based on the FSP provided in the work plan addendum (Integral Consulting Inc. 2009a). In order to determine the RAA boundaries, it has been established that further sampling is required to define the horizontal extent of DDx contamination in sediment at or above 5 mg/kg within an

expanded study area defined by the 95 percent maximum plume as determined using EVS software. Horizontal extent will be considered adequately defined when the ratio of 95 percent maximum and 95 percent minimum plume surface areas are between 1 and 2 mg/kg (parts per million [ppm]). The definition of the final 5 mg/kg isocontour will be based on "continuous" sampling of DDx in currently unsampled areas.

The vertical extent of the RAA boundary will be defined through core sampling within the horizontal extent of the boundary. All sediment cores labeled "Vertical Extent Borehole" in Figure 2-1 will be analyzed and results included in this analysis. Data from other cores previously sampled to achieve the horizontal boundary will also be used depending on the areal extent of the boundary. Vertical extent of contamination within the boundary will be considered based on concentrations of DDx and the other COIs. Large data gaps exist in vertical characterization of the COIs to the SLVs provided in Section 2. The vertical extent of the area to be addressed by the EE/CA will be based on the vertical profiles for DDx and the other COI contamination at depth. One of the largest data gaps among the COIs is for dioxins/furans.

In consideration of the scope of the decisions that will be made concerning the RAA resulting directly from data collected from the Site characterization sampling, an independent verification is required to ensure the PRP results are accurate and determine whether the RAA has been adequately characterized (horizontally and vertically). CDM will, on behalf of EPA, collect a split sample subset to confirm the PRP results and provide input as to whether the precision of the sampling effort, from field through laboratory analysis, is acceptable for this determination.

5.4.1.3 Step 3: Identify the Inputs to the Decision

The purpose of this step is to identify the information that needs to be obtained and the measurements that need to be taken to resolve the question posed in Step 2. DDx concentration data will be required, and selected samples will be analyzed for the full suite of COIs. Analytical methods will be consistent with those used by the PRP.

The CDM field team will collect a split sample of approximately 10 percent of the sediment samples taken. The total samples that are planned for collection are listed in Table 2-3 from the LSS FSP. The split samples to be collected are listed in Table 3-2. Oversight sampling will include collecting split samples to evaluate the validity and accuracy of Arkema's sample results. Inputs to the assessment will include field notes, photographs, and field reports, along with analytical results provided by LSS and EPA analysis of split samples.

5.4.1.4 Step 4: Define the Boundaries of the Study

This step defines the time periods and spatial area to which decisions will apply and determines when and where data should be collected. The specific locations sampled are intended to provide an even spatial distribution across the study area. The spatial boundaries of the study are outlined in the Arkema FSP. The time period for the

EE/CA site characterization and the CDM split sampling is approximately mid-August through the end of September 2009.

5.4.1.5 Step 5: Develop a Decision Rule

The purpose of this step is to define the parameters of interest, specify the action levels, and integrate previous DQO outputs into statements that describe a logical basis for choosing among alternative actions.

Sediment samples will be analyzed through the LSS sampling for DDx and other COIs in accordance with the Arkema FSP, Appendix A to the Arkema work plan addendum (Integral Consulting Inc. 2009a), and conditional approval letters dated June 12 and August 5, 2009 (EPA 2009c; EPA 2009d). Split samples will be collected and analyzed as described in this SAP. CDM will evaluate the precision between the LSS and split sample results.

5.4.1.6 Step 6: Specify Tolerable Limits on Decision Errors

The decision-maker's tolerance limits on decision errors, which are used to establish performance goals for the data collection design, are specified in this step. Decision makers are interested in the true value of the constituent concentrations. Since analytical data can only estimate these values, decisions that are based on measurement data could be in error (decision error). There are two reasons why the decision maker may not know the true value of the constituent concentration. These are:

- Concentrations vary over time and space. Limited sampling may miss some features of this natural variation because it is impractical to measure every point of a population. Sampling design error occurs when the sampling design is unable to capture the complete extent of natural variability that always exists in the environment.

- Analytical methods and instruments are never perfect, hence a measurement can only estimate the true value of an environmental sample. Measurement error refers to a combination of random and systematic errors that inevitably arise during the various steps of the measurement process.

The combination of sampling design and measurement error is the total study error. Since it is impossible to completely eliminate total study error, basing decisions on sample concentrations may lead to a decision error. The probability of decision error is controlled by adopting a scientific approach in which the data are used to select between one condition (the null hypothesis) and another (the alternative hypothesis). The null hypothesis is presumed to be true in the absence of evidence to the contrary. For this project, the null hypothesis is that the true concentrations of target analytes are below detection limits for the associated analyses. The alternative hypothesis is that the true concentrations of target analytes are above detection limits for associated analyses.

A false positive or "Type I" decision error refers to the type of error made when the null hypothesis is rejected when it is true, and a false negative or "Type II" decision error refers to the type of error made when the null hypothesis is accepted when it is false. For this project, a Type I decision error would result in deciding that contaminants were present in the sediment, above ACGs, when they were not. A Type II decision error would result in deciding that contaminants were below ACGs when in fact they exceeded these levels.

For this project, a Type II error is less acceptable than a Type I error because a Type II error could result in mistakenly not fully delineating site contamination. The sampling process design and analytical methods have been developed so that decision errors are minimized to the extent possible.

This QAPP addresses a comparison between LSS data and CDM split sampling, an assessment of the data as a whole, as well as oversight to the process. The tolerance limits on decision errors will, of necessity, be a qualitative assessment.

5.4.1.7 Step 7: Optimize the Design for Obtaining Data

Step 7 of the DQO process identifies the design for generating the Site data that are expected to satisfy the DQOs. The data collection design (sampling program) is described in detail in the Arkema FSP, and the boring locations and depths for split sample collection have been determined to assess PRP results.

Analytical results generated in the field by LSS will be verified by collecting 40 split sediment samples for independent laboratory analysis. Split samples will be analyzed for the COIs as stated on Table 3-2. Where the vertical extent of the RAA boundary is investigated, analysis will be performed for the full list on analytes as shown on Table 5-2. Samples for the horizontal extent of the RAA boundary defined by the 5 mg/kg DDx concentration will be analyzed for pesticides. Four composite waste borings will be analyzed for asbestos to confirm LSS waste characterization data. The upper two composite samples will be analyzed for asbestos alone.

Additionally, QA/QC samples will be taken during the oversight event such as field duplicates, trip blanks, and extra volume for laboratory analysis of MS/MSD samples.

5.4.2 Data Measurement Objectives

Every reasonable attempt will be made to obtain a complete set of usable field measurements and analytical data. If a measurement cannot be obtained or is rejected for any reason, the effect of the missing data will be evaluated by CDM. This evaluation will be reported to EPA with a proposed corrective action as described in Section 7.

In addition, the FSP provides guidance to ensure that the samples obtained are representative of the media to be investigated at the Site.

5.4.2.1 Quality Assurance Guidance

The field QA program has been designed in accordance with CDM's RAC 2 Region VIII QMP (CDM 2005b), Guidance on Systematic Planning Using the Data Quality Objectives Process, QA/G-4, (EPA 2006), and EPA Requirements for Quality Assurance Project Plans for Environmental Data Operations, QA/R-5 (EPA 2001).

5.4.2.2 Precision, Accuracy, Representativeness, Completeness, and Comparability Criteria

Precision, accuracy, representativeness, completeness, and comparability (PARCC) parameters are indicators of data quality. PARCC goals are established for the Site characterization to aid in assessing data quality as discussed in the following paragraphs.

Precision

The precision of a measurement is an expression of mutual agreement among individual measurements of the same property taken under prescribed similar conditions. Precision is quantitative and most often expressed in terms of relative percent difference (RPD). RPD is calculated as follows:

RPD = (S-D)/((S+D)/2) *100

Where: S = Sample result
D = Duplicate result

Precision of reported results is a function of inherent field-related variability plus laboratory analytical variability. Field duplicate samples will be collected to provide a measure of the contribution to overall variability of field-related sources. Contribution of laboratory-related sources to overall variability is measured through analysis of laboratory duplicates or MSD analyses.

The acceptable precision criteria for duplicate analyses are as presented in Table 5-4.

Table 5-4 Precision Criteria for Duplicate Analyses

Media	Field Duplicate		Matrix Spike Duplicate
	Either Result is less than or equal to 5 times the reporting limit	Both Results are greater than or equal to 5 times the reporting limit	
Sediment	Difference is less than or equal to 2 times the reporting limit	RPD less than or equal to 35	Limits are method specific

Chemical analytical data will be evaluated for precision using field duplicates and MSDs in accordance with the laboratory-specific limits, methodology, or EPA CLP, National Functional Guidelines (NFG) for Superfund Organic Methods Data Review.

Precision will also be measured in comparing the LSS sample results to the CDM split sample results. The split samples are essentially field duplicates, with the added

variability of different laboratories and different methods. The analysis for VOCs, SVOCs, pesticides, and PCBs are through the CLP under SOW SOM01.2, as performed for the CDM split samples, use similar analytical techniques as the SW846 methodology quoted in the LSS FSP. The standard reporting limits may vary, however, both methods will allow for the reporting of values below the reporting limit (RL) and down to the method detection limit (MDL), which will be instrument specific for any laboratory or method.

Accuracy
Accuracy is the degree of agreement of a measurement with an accepted reference or true value, and is a measure of the bias in a system. Accuracy is quantitative and usually expressed as the percent recovery (%R) of a sample, or standard, result. %R is calculated as follows:

%R = SSR - SR / SA x 100

Where: SSR = Spiked sample result
SR = Sample result
SA = Actual spike concentration

Ideally, it is desirable that the reported concentration equals the actual concentration present in the sample or the standard. Acceptable QC limits for %R are either defined by the laboratory through an analysis of historic results, method-defined and/or defined by the EPA National Functional Guidelines (NFGs), whichever is applicable. Chemical analytical data will be reviewed for accuracy using the recoveries for surrogates, MS/MSDs, and laboratory control samples (LCSs), in accordance with the acceptable QC limits as applicable.

Representativeness
Representativeness expresses the degree to which sample data accurately and precisely represent (1) the characteristic being measured, (2) parameter variations at a sampling point, and/or (3) an environmental condition. Representativeness is most concerned with the proper design of the sampling plan and the absence of cross-contamination of samples. Acceptable representativeness will be achieved through:

- Careful, informed selection of sampling sites
- Selection of testing parameters and methods that adequately define and characterize the extent of possible contamination and meet the required parameter reporting limits
- Proper gathering and handling of samples to avoid interference and prevent contamination and loss
- Collection of a sufficient number of samples to allow necessary characterization

Representativeness is a consideration that will be employed during all sample locations and collection efforts and will be assessed qualitatively by reviewing field procedures and actual sampling locations versus planned locations. Representativeness will be reviewed quantitatively by evaluating the method and trip blanks as stated in the NFGs.

Completeness
Completeness is a measure of the amount of usable data obtained from a measurement system compared to the amount that was expected to be obtained under normal conditions. Usability will be determined by evaluation of the PARCC parameters, excluding completeness. Those data that are validated or evaluated and are not considered estimated or are qualified as estimated or non-detect are considered usable. Rejected data are not considered usable. Completeness will be calculated following data evaluation. For this work, a completeness goal of 90 percent is projected for all analytical data. If this goal is not met, the CDM project manager and EPA RPM will discuss the effect. Completeness is calculated using the following equation:

Completeness = DO/DP *100

Where: DO = Amount of usable data obtained
DP = Predicted amount of usable data

Comparability
Comparability is a qualitative parameter. Consistency in the acquisition, handling, and analysis of samples is necessary for comparing results. Standard EPA analytical methods and QC will be used to ensure comparability of results with other analyses performed in a similar manner.

Comparability will be assessed between the LSS data and the CDM split sampling data. Table 5-2 lists the analytes for which data will be compared and the reporting limits requested from the EPA laboratories and the MDLs that will be provided by TestAmerica, the laboratory that will be performing analytical services for LSS. MDLs are not available for the CLP laboratory as these limits are laboratory specific and the laboratory has not been assigned at this time.

Sensitivity
Sensitivity is related to the ability to compare analytical results with project-specific levels of interest, which are the analytical concentration goals (ACGs) shown in Table 5-2. The samples collected will be analyzed through the EPA CLP program. Table 5-2 shows the compounds, CRQLs for SOW SOM01.2, and the target reporting limits requested for modified analyses from the EPA SOW SOM01.2 based on the ACGs that have been established. The laboratory will report values between the reporting limits and the MDLs as estimated. MDLs are generated by statistical analysis of multiple analyses of a low-level standard, and represent the best fundamental measurement of instrument sensitivity.

5.5 Field Measurements

Field measurements will not be required by CDM during the split sampling effort. LSS will be taking GPS and PID readings that will be observed and documented by the CDM field team.

5.6 Laboratory Analysis

Samples collected under this QAPP will be analyzed for the parameters listed in Table 3-2 and will be analyzed using an EPA CLP laboratory.

Prior to shipping samples, sampling personnel will ensure that all laboratories are ready to receive and analyze samples, can provide necessary data packages, and can provide an electronic copy of the data. The laboratories will submit an analytical data report to CDM. The data report will contain a case narrative that briefly describes the number of samples, the analyses, and any noteworthy analytical difficulties or QA/QC issues associated with the submitted samples. The data report will also include signed chain-of-custody forms, cooler receipt forms, analytical data, and a QC package. An electronic copy of the data will also be provided by the laboratories.

Reporting Limits

The laboratory will report to a concentration equivalent to the low point in the calibration curve without qualification. When the result is between the MDL and the concentration equivalent to the low point of the calibration curve, the value will be reported by the laboratory as an estimated concentration. The achievement of reporting limits depends on sample matrix effects and the on instrument sensitivity. It is therefore important for the laboratory to monitor the sensitivity of data-gathering instruments to ensure data quality through constant instrument performance checks. Reporting limits will need to be as low as possible to obtain data that are comparable with the ACGs.

Holding Times and Preservation

Holding times are storage times allowed between sample collection and sample analysis (and extraction) when the designated preservation and storage techniques are employed. Method of shipment must be considered to meet required holding times. Holding times and preservation criteria for each analytical method used in this study are provided in Table 5-1. The EPA may archive a portion of the split samples collected, by freezing to less than 20 degrees C. If samples are frozen, it is possible that analyses on these samples may occur up to one year after the holding time and still be considered valid.

Quality Control Analyses

Trip blanks will be submitted in any cooler containing samples for VOC analyses.

In addition to any field QA/QC samples or controls, internal laboratory QA procedures are maintained by the laboratory according to the standard analytical methods by which the respective analyses are performed. These will include

laboratory blanks (i.e., preparation blanks), laboratory control samples (LCS), MS/MSDs, as dictated by the applicable methods. Samples for laboratory QC analysis (MS/MSD samples) will be collected from 5 percent of the sample locations by obtaining additional sample volume from currently scheduled samples.

Duplicate Samples
Field duplicate samples are collected and analyzed to assess the overall precision of the field sample collection. These duplicates will be submitted "blind" to the chemical laboratory by using sample numbers and times that are different than their associated environmental sample. The criteria for field sampling precision for sediment samples is an RPD less than or equal to 35. Field duplicate samples will be collected if core volume allows. The split sampling effort is essentially field duplicates of the samples LSS collects so field duplicates of the split samples is not considered necessary, but would help monitor overall quality of the data set.

5.7 Special Training Requirements

Special training required for this field program includes the following:

- Health and safety training, as described in the Arkema HASP, Appendix C to the Work Plan Addendum (Integral 2008)
- EPA CLP training
- FORMS II Lite training

Field equipment such as a GPS, PID, or organic vapor meter (OVM) will be operated by the LSS team, with oversight from onsite CDM personnel.

5.8 Documentation and Records

The laboratories will submit analytical data reports to CDM, both as hardcopy and electronic copy. Each data report will contain a case narrative that briefly describes the number of samples, the analyses, and any analytical difficulties or QA/QC issues associated with the submitted samples. The data report will also include signed chain-of-custody forms, cooler receipt forms, analytical data, a QC package, and raw data. The laboratories will also provide an electronic copy of the data to CDM in accordance with each laboratory subcontract.

THIS PAGE INTENTIONALLY LEFT BLANK

Section 6
Measurement and Data Acquisition

This section covers sample process design, sampling methods requirements, handling and custody, analytical methods, QC, equipment maintenance, instrument calibration, supply acceptance, nondirect measurements, and data management. The field procedures are designed so that the following occurs:

- Samples collected are consistent with project objectives
- Samples are collected in a manner so that data represent actual field conditions

6.1 Sample Process Design

The overall goals of the sampling event are detailed in the Arkema work plan. The goal of the split sample collection is to verify that the field methods and procedures utilized during the LSS site characterization conform to the plans and standard practices and to document the range of precision in the measurement of the Arkema COI concentrations used to support the Site characterization objectives.

6.2 Sampling Methods Requirements

Sampling methods, sample containers, and overall field management are described below. Analytical methods that will be requested, sample containers, and holding times are summarized in Table 5-2.

6.2.1 Sampling Equipment and Preparation

Equipment required for the field investigation (including measurement, sampling, documentation, and decontamination equipment) is presented in Section 4 of this document. The CDM team will collect the split samples from selected locations in conjunction with the LSS sample collection.

Sample containers required for this field investigation are presented in Table 5-1. Sample containers will be procured by CDM.

Field preparatory activities include review of sampling procedures, procurement of sample containers, laboratory coordination, as well as a field planning meeting that includes field personnel and QA staff.

6.2.2 Sample Collection, Handling, and Shipment

Only sediment samples will be collected during this event. All sample collection procedures are outlined in Section 4 of this FSP and the relevant SOPs (Appendix A). QC samples will also be collected, handled, and shipped in accordance with these procedures.

6.3 Sample Handling and Custody Requirements

Custody and documentation for field and laboratory work are described below, followed by a discussion of corrections to documentation.

6.3.1 Field Sample Custody and Documentation

The information contained on the sample label and the chain-of-custody record will match. The EPA Forms II Lite chain-of-custody documentation procedure will be used by CDM team for this split sampling event. The purpose and description of the sample label and the chain-of-custody record are discussed in the following sections.

6.3.1.1 Sample Labeling and Identification

Collection of split samples will follow Arkema's sampling identification procedure as stated in Section 3.3 of the FSP, Appendix A of the Arkema Work Plan Addendum. Following this scheme will allow the samples to be correlated directly with the results from the LSS analyses. Below is a description of the sample numbering scheme:

ARK-WB-##-depth

Where: ARK = Arkema
WB = Boring
= Boring Station number
Depth (e.g., 0-2 = 0 to 2 feet below mud surface

Trip blanks will be provided by the laboratory for samples collected for VOC analyses. The trip blanks will be assigned a sample ID starting with the sample collection date of the associated VOC samples in mm-dd-yy format, followed by the identifier "TB," and numbered sequentially. For example, the first trip blank associated with a sample collected on August 17, 2009 would be identified as 08-17-09-TB-1. Trip blanks will be recorded on the COCs when returned to the laboratory for VOC analyses.

Field duplicates will be collected if sample volume is adequate and will be identified with the same labeling scheme as the trip blanks, such as 08-17-09-FD-1 would be the first field duplicate collected on August 17, 2009. The parent sample identification would be documented in the log book and the sample would be submitted to the laboratory "blind."

Sample labels will be completed and affixed to the appropriate sample containers. Preprinted labels may be used. In the event that preprinted labels are not composed of a vinyl or other waterproof material and attached to sample bottles with a waterproof adhesive, these labels will be secured with waterproof tape. Sample bottle labels will include, at least, the sample identification number, the parameter(s) to be analyzed, the sampler's initials, and the preservative used. At the time of sample collection, a member of the field team will add the date and time of sample collection.

6.3.1.2 Chain-of-Custody Requirements

Chain-of-custody procedures and sample shipment will follow the requirements of CDM SOP 1-2, for Sample Custody. The chain-of-custody record is employed as physical evidence of sample custody and control. This record system provides the means to identify, track, and monitor each individual sample from the point of collection through final data reporting. A completed chain-of-custody record is required to accompany each shipment of samples. The chain-of-custodies for the samples sent through the EPA CLP will be generated using Forms II Lite, specific EPA sample tracking software.

6.3.1.3 Sample Packaging and Shipping

Samples will be packaged and shipped in accordance with CDM SOP 2-1, Packaging and Shipping of Environmental Samples. All samples will be placed in plastic bags and then in a cooler with ice and held at 4 ± 2 degrees C. Custody seals will be placed over at least two sides of the cooler and then secured by tape. All samples will be picked up by a courier, delivered to the laboratory, or shipped by an overnight delivery service to the designated laboratory, as necessary.

6.3.1.4 Field Logbook and Records

Field logbooks will be maintained by the primary facility operator in accordance with CDM SOP 4-1, Field Logbook Content and Control. The log is an accounting of activities at the Site, and will duly note problems or deviations from the governing plans and observations relating to the sampling and analysis program. The Field Team Leader will maintain the logbook(s) and will send copies of the field logbook on a weekly basis, or if in the field for less than one week upon return to the office, the notebooks will be provided to the project manager for review, use in prepare a field report, and filing in the project files.

6.3.2 Laboratory Custody Procedures and Documentation

Laboratory custody procedures are provided in the laboratory's QAPP. Upon receipt at the laboratory, each sample shipment will be inspected to assess the condition of the shipping cooler and the individual samples. This inspection will include measuring the temperature of the cooler to document that the temperature of the samples is within the acceptable criteria (4 ± 2 degrees C) and verifying sample integrity. The enclosed chain-of-custody records will be cross-referenced with all of the samples in the shipment. These records will then be signed by the laboratory sample custodian and copies provided to be placed in the project files. The sample custodian will continue the chain-of-custody record process by using the chain-of-custody number on each sample on the receipt. It is the laboratory's responsibility to maintain internal logbooks and records throughout sample preparation, analysis, data reporting, and disposal.

6.3.3 Corrections to and Deviations from Documentation

Documentation modification requirements for field logbook entries are described in SOP 4-1, Field Logbook Content and Control (Appendix A). For the logbooks, a single

strikeout, initialed and dated, is required for documentation changes. The correct information should be entered in close proximity to the erroneous entry.

All deviations from the guiding documents will be recorded in the field logbook(s). Any major deviations will be documented according to CDM's RAC 2 Region VIII QMP (CDM 2005b). Any modifications to COC forms will be made on all copies. The EPA RPM will be notified of any major changes or deviations.

6.4 Analytical Methods Requirements

Analysis for SVOC, VOC, pesticides, and PCBs will be performed under CLP SOW SOM01.2. Reporting limits are provided in Table 5-2. Measurement Performance criteria is defined in SOW SOM01.2. The EPA has requested modification to the standard SOM01.2 to provide data for 2,4'-DDT, 2,4'-DDD and 2,4'-DDE, as well as additional expanded COIs, and to request lower reporting limits as dictated by the ACGs. The analytical methods, holding time requirements and preservatives for each analytical parameter to be used for chemical analysis are presented in Table 5-1.

6.4.1 Laboratory Quality Assurance Program

Samples collected during this project will be analyzed in accordance with standard EPA and/or nationally-recognized analytical. The purpose of using standard procedures is to provide analytical data of known quality and consistency. Analytical laboratories will adhere to QC requirements as established by EPA methods.

6.5 Quality Control Requirements

Field, laboratory, and internal office QC are discussed below.

6.5.1 Field Quality Control Samples

Because the split sampling activities are field duplicates of LSS's parent samples, field duplicates are not considered a necessity; however, if the sample volume is sufficient field duplicates will be collected at a frequency of 10 percent of the total samples collected. Field duplicates will not be collected for dioxin analysis. No equipment rinsate blank samples will be collected, and no assessment of LSS's equipment decontamination procedures will be made by CDM. For the collection of the split samples, dedicated sampling equipment will be used and decontamination will not be required.

The main objective of the oversight split sampling is to collect duplicate sample data that can be used to narrow the confidence band of the statistical analyses performed on the sample results collected by LSS. RPD is the simplest way to report precision. The range, standard deviation, and coefficient of variation or relative standard deviation (RSD) are also used as measured of precision. A small RSD or RPD indicates high precision. RSD and RPD are fractions of the measurement, which can be converted to limits about the mean. The split samples being collected by CDM will check the precision of the entire measurement process.

The split samples collected will measure the total system variability (field and laboratory variance), including the variability component resulting from the inherent heterogeneity of the sample media.

6.5.2 Laboratory Quality Control

The EPA CLP laboratories will follow all laboratory QC checks, which may include laboratory duplicates, MSs, LCSs, and/or laboratory blanks (i.e., preparation blanks).

The laboratory will perform the QC checks required by each analytical method. QC data are necessary to determine precision and accuracy and to demonstrate the absence of interferences and/or contamination. Each type of laboratory-based QC sample will be analyzed at a rate of 5 percent or one per batch (a batch is a group of up to 20 samples analyzed together), whichever is more frequent. Results of the QC analysis will be included in the data package.

Laboratory blank samples will be analyzed to assess possible contamination so that corrective measures may be taken, if necessary. Laboratory duplicate samples are aliquots of a single sample that are split on arrival at the laboratory or upon analysis. Results from laboratory duplicates are used to assess laboratory precision of the analysis. MS and LCS analyses may be used to determine accuracy.

6.5.3 Internal Quality Control Checks

Internal QC checks will be conducted throughout the project to evaluate the performance of the project team during data generation. All internal QC will be conducted in accordance with the applicable procedures listed below:

- All project deliverables will receive technical and QA reviews prior to being issued to EPA in any form.
- Completed review forms will be maintained in the project files.
- Corrective action of any deficiencies are the responsibility of the PM, with assistance from the QA staff, if necessary.

6.6 Equipment Maintenance Procedures

All laboratory equipment will be maintained in accordance with the manufacturers' maintenance and operating procedures.

6.7 Instrument Calibration Procedures and Frequency

Calibration of laboratory instruments will be based on written procedures approved by EPA, laboratory management and included in the laboratory's QA manual. Instruments and equipment will be initially calibrated and continuously calibrated at required intervals as specified by the method. Calibration standards used as reference standards will be traceable to EPA, National Institute of Standards and Technology, or another nationally recognized reference standard source.

Records of initial calibration, continuing calibration, repair, and/or replacement of laboratory equipment will be filed and maintained by the laboratory. Calibration records will be filed and maintained at the laboratory location where the work is performed and will be required to be included in data reporting packages.

6.8 Acceptance Requirements for Supplies

Prior to acceptance, all supplies and consumables will be inspected by the Site coordinator to ensure that they are in satisfactory condition and free of defects.

6.9 Data Management

Sample results data will be delivered to CDM's Denver office both in hard copy form and as an EDD. Electronic copies of all project deliverables, including graphics, will be filed by project number. Electronic files will be routinely backed up and archived. Reports will be submitted to EPA on electronic media such as compact disk – read-only memory (CD-ROM) in Microsoft-compatible format (Word for text-only files, or Excel for certain tables), if requested.

CDM's Denver administrative staff has the responsibility for maintaining the document control system. This system includes a document inventory procedure and a filing system. Project personnel are responsible for project documents in their possession while working on a particular task. Data management protocol and procedure are discussed in Section 8.

Section 7
Assessment and Oversight

Assessments and oversight reports to management are necessary to ensure that procedures are followed as required and that deviations from procedures are documented. These reports also serve to keep management current on field activities. Assessment and oversight reports are discussed below.

7.1 Assessments and Response Actions

Assessments and corresponding response actions are discussed below.

7.1.1 Assessments

Performance assessments are quantitative checks on the quality of a measurement system and are appropriate to analytical work. Performance assessments for the laboratory may be accomplished by submitting reference material as blind reference (or performance evaluation) samples. These assessment samples are samples with known concentrations that are submitted to the laboratory without informing the laboratory of the known concentration. Samples will be provided to the laboratory for performance assessment upon request from the EPA RPM.

System assessments are qualitative reviews of different aspects of project work to check on the use of appropriate QC measures and the functioning of the QA system. Any determination of or changes to project assessments will be performed under the direction of the QA manager, who reports directly to the CDM president. Quality Procedure 6.1, as defined in the CDM RAC 2 Region VIII QMP (CDM 2005b), defines CDM's corporate assessments, procedures, and requirements.

7.1.2 Response Actions

Response actions will be implemented on a case-by-case basis to correct quality problems. Minor response actions taken in the field to immediately correct a quality problem will be documented in the applicable field logbook, and a verbal report will be provided to the CDM PM. For verbal reports, the CDM PM will complete a communication log to document that response actions were relayed to him. Major response actions taken in the field will be approved by the CDM PM and EPA prior to implementation of the change. Major response actions are those that may affect the quality or objective of the investigation. Quality problems that cannot be corrected quickly through routine procedures require implementation of a Corrective Action Request (CAR) Form.

All formal response actions will be submitted to the CDM PM for review and issuance. The CDM PM or local QA coordinators will notify the QA manager when quality problems arise that may require a formal response action. CAR forms will be completed according to Quality Procedure 8.1 of the CDM RAC 2 Region VIII QMP (CDM 2005b).

7.2 Reports to Management

QA reports will be provided to management whenever quality problems are encountered. Field staff will note any quality problems on field data sheets. The CDM PM will inform the QA manager upon encountering quality issues that cannot be immediately corrected. Weekly reports and change request forms are not required for this work assignment. Monthly QA reports will be submitted to the CDM QA manager by the QA coordinator or the CDM PM. Topics to be summarized regularly may include, but not be limited to:

- Document technical and QA reviews that have been conducted
- Activities and general program status
- Project meetings
- Unscheduled maintenance activities
- Corrective action activities
- Any unresolved problem
- Assessment of data deficiencies
- Any significant QA/QC problems not included above

Section 8
Data Validation and Usability

Laboratory results will be reviewed for compliance with project objectives. The split samples will be compared to the parent sample from the LSS analytical results.

8.1 Data Review, Validation, and Verification Requirements

Data validation consists of examining the data package(s) against method requirements and the EPA Contract Laboratory Program National Functional Guidelines for Superfund Organic Methods Data Review (EPA 2005). CLP or CLP-like data packages will be received from the laboratories. The validator may examine, as appropriate, the reported results, QC summaries, case narratives, instrument calibration runs, chain-of-custody information, raw data, LCS/LCSDs, MS/MSDs, initial and continuing instrument calibration and blanks, initial calibration results, and other reported information to determine the accuracy and completeness of the data package. During this process, the validator will verify that the analytical methods and QC requirements were followed. The validator may recalculate selected analytical results to verify the accuracy of the reported information. Analytical results will then be qualified as necessary. Data verification and validation descriptions are provided Guidance for Labeling Externally Validated Laboratory Analytical Data for Superfund Use (EPA 2009a). Laboratory EDDs will also be provided to the EPA for its Ansets database.

8.2 Data Quality Determinations

The following sections describe activities for assessing the effectiveness of the implementation of the project and associated QA/QC. The purpose of the appraisal is to ensure that the Arkema work plan was implemented as prescribed. This assessment will only be focused on the samples associated with the split sampling event performed CDM.

8.2.1 Reconciliation with Data Quality Objectives

Once data have been generated, CDM will evaluate the collected split sample analytical data for the PARCC parameters as stated in Section 5.4.2.2 of this SAP. Sample data will be maintained in a Microsoft Access database. Laboratory QC sample data will be stored in hard copy (in the project files) and in a separate database.

8.2.2 Data Quality Assessment

Formally conducted data quality assessments should be performed as part of the data review and evaluation process; this may be performed in conjunction with the reconciliation with DQOs. Processes and protocols for conducting data quality assessments are described in the following sections.

8.2.2.1 Informal Data Quality Assessments

Informal data quality assessments may be conducted at any time during the sampling and analysis activities to ensure that project requirements are being met and to document any variations from the Arkema work plan as a result of unexpected field or sample conditions. Informal data quality assessments can be performed by any project team member from the field team leader to the sampling technician. The purpose of the informal project data quality assessment is to document changes, additions, or deletions in the field or analytical procedures as it relates to the Arkema work plan, to provide rapid feedback to the project staff, and to facilitate corrective action and continuous improvement. The informal data quality assessment is documented on a field or laboratory modification form. The modification form indicates the proposed change, the rationale for the change, and requires approval before it may be implemented.

Other possible informal data quality assessments that may be carried out over the course of the project, including review and verification of procedures, followed as part of real-time control charting of QC samples analyzed via field and subcontract laboratory procedures.

8.2.2.2 Formal Data Quality Assessments

Formally conducted data quality assessments may be performed, if directed by EPA, as part of the data review and evaluation process; this may be performed in conjunction with the reconciliation with DQOs. Formal data quality assessments should be performed by project team member(s) such as the field team leader or another who is familiar with the project DQOs and is capable of assessing whether all aspects of the project goals were met. The purpose of the formal data quality assessment is to document changes, additions, or deletions in the field or analytical procedures as it relates to the Arkema work plan and to independently evaluate the effect the modifications may have on the project DQOs. Another major role of the data quality assessment is to determine and discuss data gaps, trends, and evaluate usability of the data.

Other possible formal data quality assessments that may be carried out over the course of the project include:

- Review and verification of procedures followed as part of real-time control charting of QC samples analyzed via field and subcontract laboratory procedures
- Evaluation of the flow of electronic data

Reporting the result of the formal data quality assessment will be incorporated in the section of the Data Presentation/Evaluation Report that outlines whether or not DQOs were met.

Section 9
References

CDM (CDM Federal Programs Corporation). 2007. *CDM Federal Programs Corporation Quality Assurance Manual*. Revision 11. March.

_____. 2005. RAC 2 Region VIII Quality Management Plan. Revision 0. July.

EPA (U.S. Environmental Protection Agency). 2009a. Guidance for Labeling Externally Validated Laboratory Analytical Data for Superfund Use. January 13.

_____. 2009b. Resolution of Disputed Issues Pertaining to the EE/CA Work Plan Addendum and Evaluation of a CDF in the EE/CA. February 21.

_____.2009c. Arkema Early Action EE/CA Work Plan Addendum: Appendix A – Field Sampling Plan (FSP), Appendix B – Quality Assurance Project Plan (QAPP), Appendix C – Health and Safety Plan (HASP), Dated May 15, 2009. June 12.

_____.2009d. Documentation of Conditional Approval Agreements and Schedule for EE/CA Investigation; U.S. EPA Region 10 Docket No. CERCLA 10-2005-0191, dated July 29, 2009. August 5.

_____. 2007. Contract Laboratory Guidance for Field Samplers, EPA 540-R-07-06. July.

_____. 2005. USEPA Contract Laboratory Program National Functional Guidelines for Superfund Organic Methods Data Review. January.

_____. 1994. QA/G-4, Guidance for the Data Quality Objectives Process, Publication No. EPA/600/R-96/0555. September.

ERM (Environmental Resources Management). Uplands remedial investigation report, Lots 3 & 4 and Tract A – Revision 1. Arkema Inc., Portland, OR. Environmental Resources Management, 6650 Redwood Lane, Suite 300, Portland, OR.

Integral Consulting, Inc. 2008. Arkema Early Action EE/CA Work Plan Work Plan Addendum. Prepared for Legacy Site Services LLC. July 22, 2008.

_____. 2009a. Arkema Early Action EE/CA Work Plan Addendum Appendix A Field Sampling Plan. Prepared for Legacy Site Services LLC. May 15, 2009.

_____. 2009b. Arkema Early Action EE/CA Work Plan Addendum Appendix B Quality Assurance Project Plan. Prepared for Legacy Site Services LLC. May 15, 2009.

Parametrix. 2007. Arkema Early Action EE/CA Work Plan. Prepared for the U.S. Environmental Protection Agency Region 10, Environmental Cleanup Office, Seattle WA. Prepared by Parametrix, Portland, OR. May 11, 2007.

THIS PAGE INTENTIONALLY LEFT BLANK

Figures

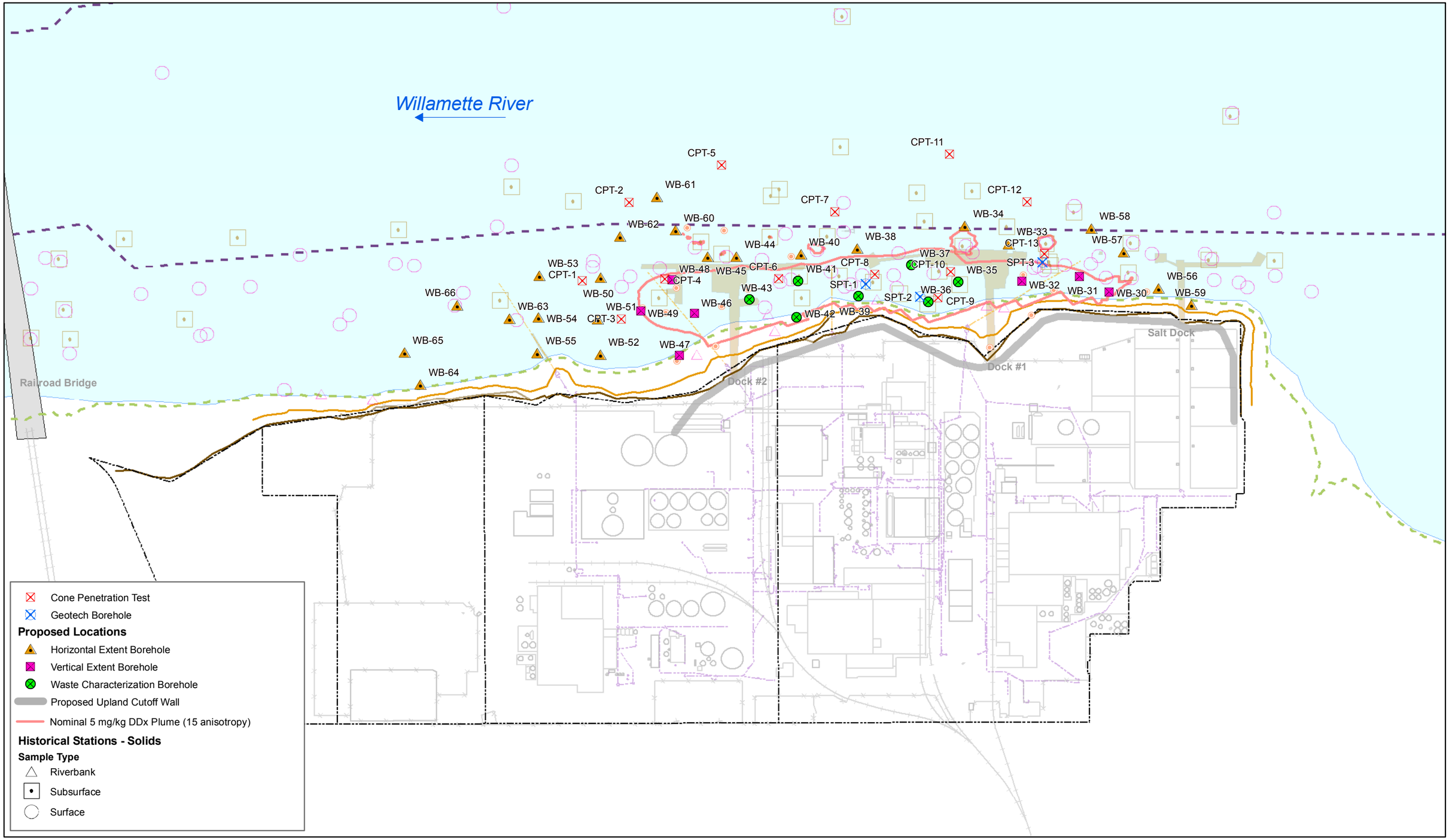

integral consulting inc.

0 100 200 400 Feet

FEATURE SOURCES:
Bathymetric Information: Multibeam bathymetric survey conducted by David Evans and Associates, Inc. from February 6 - March 6, 2004.
Contours were derived from a Digital Terrain Model (DTM) based on a three-foot grid of multibeam data.
Vertical Datum: North American Vertical Datum of 1988(NAVD88).
Horizontal Datum: North American Datum of 1983 - 91 adjusted (NAD83/91), State Plane Coordinate System (SPCS), Oregon North Zone.
Units: International Feet.
Basemap: Basemap features updated in 2006 by David Evans and Associates. Ordinary high water line, top of bank, and other site features surveyed in April 2006.
Most buildings and structures on the Arkema site have been demolished or removed.
OHW and Top of Slope lines were created from the April 2006 DEA survey, the +12ft contour line was derived from the combined lidar/bathymetry grid.
Lot Lines: Created by importing pdf file from ERM, georeferencing to CAD lines (RMS error = 2.3042) and heads-up digitizing the lot lines.

E-Sewer-L
Storm Drain
12ft Contour
Bridges
Navigation Channel
River
Property and Lot Boundaries
Docks and Structures 2005
Ordinary High Water
Top of Bank

Figure 2-1
Arkema EE/CA
Proposed Sediment Sampling Locations

Tables

Table 2-3. Proposed Sediment Chemistry Boreholes, Analyses, and Rationale[a]

Station No.	Proposed X Coordinate	Proposed Y Coordinate	Estimated Sediment Thickness (ft)[b]	Proposed Chemistry Sample Intervals and Parameters[c]	Borehole Rationale
WB-30	7628292.80	701945.99	40	Sample and archive every 2' interval from sediment surface to bedrock. Standard analysis on samples from 8 - 10' bgs interval and below.[d]	Inside horizontal extent of nominal 5 ppm DDx plume, placed to define vertical extent.
WB-31	7628273.94	702029.99	25	Sample and archive every 2' interval from sediment surface to bedrock. Standard analysis on samples from 8 - 10' bgs interval and below.[d]	Inside horizontal extent of nominal 5 ppm DDx plume, placed to define vertical extent.
WB-32	7628169.37	702134.57	25	Sample and archive every 2' interval from sediment surface to bedrock. Standard analysis on samples from 10 - 12' bgs interval and below.[d]	Inside horizontal extent of nominal 5 ppm DDx plume, placed to define vertical extent.
WB-33	7628219.08	702223.72	10	Sample and archive every 2' interval from sediment surface to bedrock. Standard analysis on all samples if WB-34 shows DDx > 5 ppm at any interval.	Outside horizontal extent of nominal 5 ppm DDx plume, placed based on Drill Guide analysis to refine horizontal extent if indicated by WB-34. If location is within horizontal RAA, data will also be used to help define vertical extent in that location.
WB-34	7628183.08	702340.30	5	Sample and archive every 2' interval from sediment surface to bedrock. Standard analysis on all samples.	Outside horizontal extent of nominal 5 ppm DDx plume, placed based on Drill Guide analysis to refine horizontal extent. If location is within horizontal RAA, data will also be used to help define vertical extent in that location.
WB-35	7628063.08	702259.72	40	Sample and archive every 2' interval from sediment surface to 20' bgs, and every 3' interval from 20' bgs to bedrock. Composite and archive one sample using samples from 2' intervals from 0 - 10' bgs and from 10 - 20' bgs. Analyze as follows: Standard analysis for each 3' interval from 20' to bedrock. Expanded analysis + Asb on composite samples from 0 - 10' and 10 - 20'.[d]	Inside horizontal extent of nominal 5 ppm DDx plume, placed to define vertical extent and for waste characterization.
WB-36	7627973.93	702285.44	35	Sample and archive every 2' interval from sediment surface to 22' bgs, and every 3' interval from 22' bgs to bedrock. Composite and archive one sample using samples from 2' intervals from 0 - 10' bgs and from 10 - 22' bgs. Analyze as follows: Standard analysis for each 3' interval from 22' to bedrock. Expanded analysis + Asb on composite samples from 0 - 10' and 10 - 22'.[d]	Inside horizontal extent of nominal 5 ppm DDx plume, placed to define vertical extent and for waste characterization.
WB-37	7628018.50	702379.73	25	Sample and archive every 2' interval from sediment surface to 14' bgs, and every 3' interval from 14' bgs to bedrock. Composite and archive one sample using samples from 2' intervals from 0 - 6' bgs and from 6 - 14' bgs. Analyze as follows: Standard analysis for each 3' interval from 14' to bedrock. Expanded analysis + Asb on composite samples from 0 - 6' and 6 - 14'.[d]	Inside horizontal extent of nominal 5 ppm DDx plume, placed to define vertical extent and for waste characterization.
WB-38	7627960.21	702515.16	5	Sample and archive every 2' interval from sediment surface to bedrock. Standard analysis on all samples if WB-40 shows DDx > 5 ppm at any interval.	Outside horizontal extent of nominal 5 ppm DDx plume, placed based on Drill Guide analysis to refine horizontal extent if indicated by WB-40. If location is within horizontal RAA, data will also be used to help define vertical extent in that location.
WB-39	7627869.35	702432.87	35	Sample and archive every 2' interval from sediment surface to 18' bgs, and every 3' interval from 18' bgs to bedrock. Composite and archive one sample using samples from 2' intervals from 0 - 8' bgs and from 8 - 18' bgs. Analyze as follows: Standard analysis for each 3' interval from 18' to bedrock. Expanded analysis + Asb on composite samples from 0 - 8' and 8 - 18'.[d]	Inside horizontal extent of nominal 5 ppm DDx plume, placed to define vertical extent and for waste characterization.

Table 2-3. Proposed Sediment Chemistry Boreholes, Analyses, and Rationale[a]

Station No.	Proposed X Coordinate	Proposed Y Coordinate	Estimated Sediment Thickness (ft)[b]	Proposed Chemistry Sample Intervals and Parameters[c]	Borehole Rationale
WB-40	7627855.64	702616.31	5	Sample and archive every 2' interval from sediment surface to bedrock. Standard analysis on all samples.	Outside horizontal extent of nominal 5 ppm DDx plume, placed based on Drill Guide analysis to refine horizontal extent. If location is within horizontal RAA, data will also be used to help define vertical extent in that location.
WB-41	7627799.06	702576.88	20	Sample and archive every 2' interval from sediment surface to 14' bgs, and every 3' interval from 14' bgs to bedrock. Composite and archive one sample using samples from 2' intervals from 0 - 6' bgs and from 6 - 14' bgs. Analyze as follows: Standard analysis for each 3' interval from 14' to bedrock. Expanded analysis + Asb on composite samples from 0 - 6' and 6 - 14'.[d]	Inside horizontal extent of nominal 5 ppm DDx plume, placed to define vertical extent and for waste characterization.
WB-42	7627725.34	702520.30	35	Sample and archive every 2' interval from sediment surface to 14' bgs, and every 3' interval from 14' bgs to bedrock. Composite and archive one sample using samples from 2' intervals from 0 - 6' bgs and from 6 - 14' bgs. Analyze as follows: Standard analysis for each 3' interval from 14' to bedrock. Expanded analysis + Asb on composite samples from 0 - 6' and 6 - 14'.[d]	Inside horizontal extent of nominal 5 ppm DDx plume, placed to define vertical extent and for waste characterization.
WB-43	7627682.48	702642.03	20	Sample and archive every 2' interval from sediment surface to 18' bgs, and every 3' interval from 18' bgs to bedrock. Composite and archive one sample using samples from 2' intervals from 0 - 8' bgs and from 8 - 18' bgs. Analyze as follows: Standard analysis for each 3' interval from 18' to bedrock. Expanded analysis + Asb on composite samples from 0 - 8' and 8 - 18'.[d]	Inside horizontal extent of nominal 5 ppm DDx plume, placed to define vertical extent and for waste characterization.
WB-44	7627744.20	702739.74	10	Sample and archive every 2' interval from sediment surface to bedrock. Standard analysis on all samples if WB-40 or WB-45 show DDx > 5 ppm at any interval.	Outside horizontal extent of nominal 5 ppm DDx plume, placed based on Drill Guide analysis to refine horizontal extent if indicated by WB-40 or WB-45. If location is within horizontal RAA, data will also be used to help define vertical extent in that location.
WB-45	7627696.20	702796.32	5	Sample and archive every 2' interval from sediment surface to bedrock. Standard analysis on all samples.	Outside horizontal extent of nominal 5 ppm DDx plume, placed based on Drill Guide analysis to refine horizontal extent. If location is within horizontal RAA, data will also be used to help define vertical extent in that location.
WB-46	7627564.19	702727.74	20	Sample and archive every 2' interval from sediment surface to bedrock. Standard analysis on samples from 8 - 10' bgs interval and below.[d]	Inside horizontal extent of nominal 5 ppm DDx plume, placed to define vertical extent.
WB-47	7627456.19	702688.31	30	Sample and archive every 2' interval from sediment surface to bedrock. Standard on all samples.	Between horizontal extent of nominal 5 ppm DDx plume and shoreline, placed to define horizontal and vertical extent.
WB-48	7627593.34	702827.18	15	Sample and archive every 2' interval from sediment surface to bedrock. Standard analysis on samples from 2 - 4' bgs interval and below.[d]	Inside horizontal extent of nominal 5 ppm DDx plume, placed to define vertical extent.
WB-49	7627480.19	702837.46	25	Sample and archive every 2' interval from sediment surface to bedrock. Standard analysis on samples from 6 - 8' bgs interval and below.[d]	Inside horizontal extent of nominal 5 ppm DDx plume, placed to define vertical extent.
WB-50	7627478.47	702972.90	15	Sample and archive every 2' interval from sediment surface to bedrock. Standard analysis on all samples.	Outside horizontal extent of nominal 5 ppm DDx plume, placed based on Drill Guide analysis to refine horizontal extent. If location is within horizontal RAA, data will also be used to help define vertical extent in that location.

Table 2-3. Proposed Sediment Chemistry Boreholes, Analyses, and Rationale[a]

Station No.	Proposed X Coordinate	Proposed Y Coordinate	Estimated Sediment Thickness (ft)[b]	Proposed Chemistry Sample Intervals and Parameters[c]	Borehole Rationale
WB-51	7627391.04	702909.47	25	Sample and archive every 2' interval from sediment surface to bedrock. Standard analysis on all samples if WB-50 shows DDx > 5 ppm at any interval.	Outside horizontal extent of nominal 5 ppm DDx plume, placed based on Drill Guide analysis to refine horizontal extent if indicated by WB-50. If location is within horizontal RAA, data will also be used to help define vertical extent in that location.
WB-52	7627325.89	702846.04	30	Sample and archive every 2' interval from sediment surface to bedrock. Standard analysis on all samples if WB-51 shows DDx > 5 ppm at any interval.	Outside horizontal extent of nominal 5 ppm DDx plume, placed based on Drill Guide analysis to refine horizontal extent if indicated by WB-51. If location is within horizontal RAA, data will also be used to help define vertical extent in that location.
WB-53	7627380.75	703096.33	15	Sample and archive every 2' interval from sediment surface to bedrock. Standard analysis on all samples.	Outside horizontal extent of nominal 5 ppm DDx plume, placed based on Drill Guide analysis to refine horizontal extent. If location is within horizontal RAA, data will also be used to help define vertical extent in that location.
WB-54	7627296.75	703029.47	25	Sample and archive every 2' interval from sediment surface to bedrock. Standard analysis on all samples if WB-53 or WB-63 show DDx > 5 ppm at any interval.	Outside horizontal extent of nominal 5 ppm DDx plume, placed based on Drill Guide analysis to refine horizontal extent if indicated by WB-53 or WB-63. If location is within horizontal RAA, data will also be used to help define vertical extent in that location.
WB-55	7627224.75	702972.90	30	Sample and archive every 2' interval from sediment surface to bedrock. Standard analysis on all samples if WB-54 shows DDx > 5 ppm at any interval.	Outside horizontal extent of nominal 5 ppm DDx plume, placed based on Drill Guide analysis to refine horizontal extent if indicated by WB-54. If location is within horizontal RAA, data will also be used to help define vertical extent in that location.
WB-56	7628380.23	701855.13	35	Sample and archive every 2' interval from sediment surface to bedrock. Standard analysis on all samples.	Outside horizontal extent of nominal 5 ppm DDx plume, placed based on Drill Guide analysis to refine horizontal extent. If location is within horizontal RAA, data will also be used to help define vertical extent in that location.
WB-57	7628393.95	701983.71	15	Sample and archive every 2' interval from sediment surface to bedrock. Standard analysis on all samples.	Outside horizontal extent of nominal 5 ppm DDx plume, placed based on Drill Guide analysis to refine horizontal extent. If location is within horizontal RAA, data will also be used to help define vertical extent in that location.
WB-58	7628387.09	702086.57	10	Sample and archive every 2' interval from sediment surface to bedrock. Standard analysis on all samples.	Outside horizontal extent of nominal 5 ppm DDx plume, placed based on Drill Guide analysis to refine horizontal extent. If location is within horizontal RAA, data will also be used to help define vertical extent in that location.
WB-59	7628402.28	701762.98	35	Sample and archive every 2' interval from sediment surface to bedrock. Standard analysis on all samples if WB-56 shows DDx > 5 ppm at any interval.	Outside horizontal extent of nominal 5 ppm DDx plume, placed based on Drill Guide analysis to refine horizontal extent if indicated by WB-56. If location is within horizontal RAA, data will also be used to help define vertical extent in that location.
WB-60	7627695.64	702903.53	10	Sample and archive every 2' interval from sediment surface to bedrock. Standard analysis on all samples.	Outside horizontal extent of nominal 5 ppm DDx plume, placed based on Drill Guide analysis to refine horizontal extent. If location is within horizontal RAA, data will also be used to help define vertical extent in that location.

Table 2-3. Proposed Sediment Chemistry Boreholes, Analyses, and Rationale[a]

Station No.	Proposed X Coordinate	Proposed Y Coordinate	Estimated Sediment Thickness (ft)[b]	Proposed Chemistry Sample Intervals and Parameters[c]	Borehole Rationale
WB-61	7627730.35	702995.27	20	Sample and archive every 2' interval from sediment surface to bedrock. Standard analysis on all samples if WB-60 or WB-62 show DDx > 5 ppm at any interval.	Outside horizontal extent of nominal 5 ppm DDx plume, placed based on Drill Guide analysis to refine horizontal extent if indicated by WB-60 or WB-62. If location is within horizontal RAA, data will also be used to help define vertical extent in that location.
WB-62	7627591.50	703002.71	15	Sample and archive every 2' interval from sediment surface to bedrock. Standard analysis on all samples if WB-50 or WB-60 show DDx > 5 ppm at any interval.	Outside horizontal extent of nominal 5 ppm DDx plume, placed based on Drill Guide analysis to refine horizontal extent if indicated by WB-50 or WB-60. If location is within horizontal RAA, data will also be used to help define vertical extent in that location.
WB-63	7627246.85	703084.53	30	Sample and archive every 2' interval from sediment surface to bedrock. Standard analysis on all samples.	Outside horizontal extent of nominal 5 ppm DDx plume, placed based on Drill Guide analysis to refine horizontal extent. If location is within horizontal RAA, data will also be used to help define vertical extent in that location.
WB-64	7626969.15	703151.48	30	Sample and archive every 2' interval from sediment surface to bedrock. Standard analysis on all samples if WB-65 shows DDx > 5 ppm at any interval.	Outside horizontal extent of nominal 5 ppm DDx plume, placed based on Drill Guide analysis to refine horizontal extent if indicated by WB-65. If location is within horizontal RAA, data will also be used to help define vertical extent in that location.
WB-65	7627006.34	703235.78	30	Sample and archive every 2' interval from sediment surface to bedrock. Standard analysis on all samples.	Outside horizontal extent of nominal 5 ppm DDx plume, placed based on Drill Guide analysis to refine horizontal extent. If location is within horizontal RAA, data will also be used to help define vertical extent in that location.
WB-66	7627186.51	703210.09	30	Sample and archive every 2' interval from sediment surface to bedrock. Standard analysis on all samples.	Outside horizontal extent of nominal 5 ppm DDx plume, placed based on Drill Guide analysis to refine horizontal extent. If location is within horizontal RAA, data will also be used to help define vertical extent in that location.

Notes:

[a] Separate boreholes will be advanced for geotechnical sampling (see Table 2-4).

[b] Sediment thicknesses are estimated based on nearby historical sample stations.

[c] Cores will be divided into 2' sections to bedrock or refusal, except for the surface sample that will be collec ted from 0 - 1'. Composite samples representing the whole length of the 2 - 3' core segments will be collected, mixed to homogeneity (as is possible), and analyzed. In addition, if any field indications of contamination within core sections are noted, discrete samples will be obtained from that portion of core segments that show staining, have odors, show "hits" on a field instrument, etc. All samples that are not analyzed will be archived for possible future analysis.

[d] DDx analysis in 2' samples above designated depth interval is not required as it is assumed the upper sediments are within the RAA boundary and will be evaluated in the EE/CA.

Analytes:

Chemistry Standard Analyte List = DDx, conventionals (grain size, total solids, TOC).
Expanded Analyte List = Standard List + SVOCs, PCBs, Dioxins/Furans (D/F), VOCs; full suite of organochlorine pesticides.
Asb = Asbestos

bgs - below ground/sediment surface
DDx - total of 2,4'- and 4,4'-DDD, DDE, and DDT
EE/CA - engineering evaluation/cost analysis
PCB - polychlorinated biphenyl
RAA - removal action area
SVOC - semivolatile organic compound
TOC - total organic carbon
VOC - volatile organic compound

Table 3-1 Split Samples Locations

Station No.	Estimated Sediment Thickness (ft)a	Number of Discrete Samples Requested	Discrete Sample Interval (feet below mudline)	Number of Composite Samples Requested	Composite Sample Interval (feet below mudline)
Waste Characterization Cores					
WB-35	40	3	28-30, 34-36, 38-40	2	0-10, 10-20
WB-42	35	3	24-26, 30-32, 34-36	2	0-6, 6-14
Vertical Characterization Cores					
WB-30	40	3	8-10, 22-24, 38-40	0	N/A
WB-49	25	3	6-8, 14-16, 22-24	0	N/A
Horizontal Characterization Cores					
WB-34	5	3	0-2, 2-4, 4-6	0	N/A
WB-40	5	3	0-2, 2-4, 4-6	0	N/A
WB-51	25	3	4-6, 6-8, 8-10	0	N/A
WB-56	35	3	10-12, 14-16, 18-20	0	N/A
WB-60	10	3	2-4, 4-6, 8-10	0	N/A
WB-63	30	3	4-6, 6-8, 8-10	0	N/A
WB-65	30	3	4-6, 6-8, 8-10	0	N/A
WB-66	30	3	4-6, 6-8, 8-10	0	N/A
Total		36		4	

Notes:

a) from Arkema EE/CA Work Plan Addendum, Appendix A: Field Sampling Plan, Table 2-3

N/A - not applicable

Table 3-2 Arkema Site Split Sampling Sediment Analyses

Station number	Characterization Chemistry Boring Type	Sample Type	Depth	**Volatile Organic Compounds** (SOW SOM01.2)	**Semi-Volatile Organic Compounds** (SOW SOOM01.2)	**Organochlorine Pesticides*** (SOW SOM01.2)	**PCB Aroclor** (SOW SOM01.2)	**Dioxins and Furans** (U.S. EPA 1613B)	**Tributyltin** (Krone 1989)	**Asbestos** EPA PLM 600/R93/116
WB-35	Waste	Composite	0-10,10-20	1	1	1	1	1	1	2
WB-35	Waste	Discrete	28-30, 34-36, 38-40	3	3	3	3	3	3	
WB-42	Waste	Composite	0-6, 6-14	1	1	1	1	1	1	2
WB-42	Waste	Discrete	24-26, 30-32, 34-36	3	3	3	3	3	3	
WB-30	Vertical	Discrete	8-10, 22-24, 38-40	3	3	3	3	3	3	
WB-49	Vertical	Discrete	6-8, 14-16, 22-24	3	3	3	3	3	3	
WB-34	Horizontal	Discrete	0-2, 2-4, 4-6	1	1	3	1	1	1	
WB-40	Horizontal	Discrete	0-2, 2-4, 4-6	1	1	3	1	1	1	
WB-51	Horizontal	Discrete	4-6, 6-8, 8-10	1	1	3	1	1	1	
WB-56	Horizontal	Discrete	10-12, 14-16, 18-20	1	1	3	1	1	1	
WB-60	Horizontal	Discrete	2-4, 4-6, 8-10	1	1	3	1	1	1	
WB-63	Horizontal	Discrete	4-6, 6-8, 8-10	1	1	3	1	1	1	
WB-65	Horizontal	Discrete	4-6, 6-8, 8-10	1	1	3	1	1	1	
WB-66	Horizontal	Discrete	4-6, 6-8, 8-10	1	1	3	1	1	1	
Totals (Normal Samples)				22	22	38	22	22	22	4
Quality Control Samples										
Field Duplicate		Discrete	Surface	0	0	0	0	0	0	0
Equipment Rinsate				0	0	0	0	0	0	0
MS/MSD				2	2	2	2	0	2	0
Totals (including QC samples)				24	24	40	24	22	24	4

Notes:

For the composite sample analysis, the lower depth will be analyzed for the full suite of COIs.
For the horizontal borings, only the deepest sample will be analyzed for the full analytical suite.

Only asbestos analysis will be requested for the surface to depth composite.
The first two samples will be analyzed for pesticides only.

MS/MSD - Matrix Spike/Matrix Spike Duplicate
PCB - polychlorinated biphenyl

CDM

Table 5-1 Analytical Parameters, Methods, Containers, Preservation, and Holding Times

Analysis	Method	Container	Preservation	Holding Time
Volatile Organic Compounds	SOM01.2	2 ounce Wide Mouth Glass with Septa	Cool to 2-6°C	14 days
Semivolatile Organic Compounds[1]	SOM01.2	8 oz. Wide Mouth Glass[1]	Cool to 2-6°C	14 days to extraction, 40 days to analysis
Polychlorinated Biphenyls (PCBs) as Aroclors[1]	SOM01.2	8 oz.Wide Mouth Glass[1]	Cool to 2-6°C	14 days to extraction, 40 days to analysis
Organochlorine Pesticides[1]	SOM01.2	8 oz. Wide Mouth Glass	Cool to 2-6°C	14 days to extraction, 40 days to analysis
Dioxin/Furans	DLM02.0	4 oz. Wide Mouth Glass	Cool to 2-6°C	14 days to extraction, 1 year to analysis
Tributyl Tin	Krone, 1989	4 oz. Wide Mouth Glass	Cool to 2-6°C	14 days to extraction, 40 days to analysis
Asbestos	EPA 600/R-93/116	8 oz. Wide Mouth Glass	Cool to 2-6°C	180 days
Archive	TBD	8 oz. Wide Mouth Glass	Deep frozen (-20°C)	1 year

Notes:

1 - These analyses can be combined into one or two appropriately sized wide mouth glass jar(s) as determined by the laboratory.
TBD - to be determined.

Table 5-2 EPA Analytical Concentration Goals (ACGs), Modified Analytical Requests and LSS Comparisons

Analyte	Target CRQLs EPA ACGs[a]	Method	SOW CRQL	Current LSS ACGs in QAPP Table A6-4	LSS lab MDL
Organochlorine pesticides (µg/kg)					
SOM01.2 - Modified Analysis - additional compounds requested					
2,4'-DDD	0.04	PEST - MA		0.04	**0.054**
2,4'-DDE	0.04	PEST - MA		0.04	**0.058**
2,4'-DDT	0.04	PEST - MA		0.04	**0.06**
Oxychlordane	0.05	PEST - MA			
cis-Nonachlor	0.05	PEST - MA			
trans-Nonachlor	0.05	PEST - MA			
Hexachlorobenzene	2.3	PEST - MA			
Hexachlorobutadiene	0.6	PEST - MA			
Octachlorostyrene	1.0	PEST - MA			
Standard List					
4,4'-DDD	0.04	PEST - MA	3.3	0.04	**0.05**
4,4'-DDE	0.04	PEST - MA	3.3	0.04	**0.052**
4,4'-DDT	0.04	PEST - MA	3.3	0.04	**0.052**
alpha-BHC	0.001	PEST - MA	1.7	360	0.052
cis-Chlordane (alpha-Chlordane)	0.046	PEST - MA	1.7	0.37	0.054
Aldrin	0.00038	PEST - MA	1.7	40	0.074
beta-BHC	0.0036	PEST - MA	1.7	1300	0.054
delta-BHC	*	SOM01.2	1.7	NE	0.082
Dieldrin	0.001	PEST - MA	3.3	0.0081	**0.056**
Endosulfan I	1.7	SOM01.2	1.7	NE	0.044
Endosulfan II	*	SOM01.2	3.3	NE	0.05
Endosulfan sulfate	*	SOM01.2	3.3	NE	0.054
Endrin	0.084	PEST - MA	3.3	2.22	0.068
Endrin aldehyde	*	SOM01.2	1.7	NE	0.05
Endrin ketone	*	SOM01.2	1.7	NE	0.046
Gamma-BHC (Lindane)	0.005	PEST - MA	1.7	2.37	0.1
gamma-Chlordane	0.046	PEST - MA	1.7	0.37	0.1
Heptachlor	0.0014	PEST - MA	1.7	10	0.056
Heptachlor epoxide	0.0007	PEST - MA	1.7	2.5	0.058
Methoxychlor	1.4	PEST - MA	17	3,100,000	0.06
Toxaphene	0.0059	PEST - MA	170	1600	2.4
PCB Aroclors (µg/kg)					
Aroclor 1016	0.048	PCB - MA	**33**	530	6.4
Aroclor 1221	0.048	PCB - MA	**33**	NE	16
Aroclor 1232	0.048	PCB - MA	**33**	NE	14
Aroclor 1242	0.048	PCB - MA	**33**	NE	4.2
Aroclor 1248	0.048	PCB - MA	**33**	1,500	2.6
Aroclor 1254	0.048	PCB - MA	**33**	300	4.2
Aroclor 1260	0.048	PCB - MA	**33**	200	6
Aroclor 1262	0.048	PCB - MA	**33**	NE	3.8
Aroclor 1268	0.048	PCB - MA	**33**	NE	4.2
Total PCBs	0.048				
SVOC (µg/kg)					
Halogenated Compounds					
1,2-Dichlorobenzene	184	SOM01.2	170	1,700	1.28
1,3-Dichlorobenzene	300	SOM01.2	170	300	1.44
1,4-Dichlorobenzene	2	SVOC - MA	170	300	0.66
1,2,4-Trichlorobenzene	9,200	SOM01.2	170	9,200	2.4
Hexachlorobenzene	2.3	SOM01.2	**170**	19	0.76
2-Chloronaphthalene	*	SOM01.2	170	23,000,000	0.36
Hexachloroethane	*	SOM01.2	170	120,000	2.2
Hexachlorobutadiene	0.6	SOM01.2	170	600	1.82
Hexachlorocyclopentadiene	400	SOM01.2	170	400	0.52
2,2'-oxybis(1-chloropropane)	*	SOM01.2	170	7,400	1.34
Bis(2-chloroethoxy)methane	*	SOM01.2	170	NE	0.6
Bis(2-chloroethyl)ether	*	SOM01.2	170	580	1.98

Table 5-2 EPA Analytical Concentration Goals (ACGs)

Analyte	Target CRQLs EPA ACGs[a]	Method	SOW CRQL	Current LSS ACGs in QAPP Table A6-4	LSS lab MDL
4-Chlorophenyl phenyl ether	*	SOM01.2	170	NE	1.14
4-Bromophenyl phenyl ether	*	SOM01.2	170	NE	0.66
3,3'-Dichlorobenzidine	*	SOM01.2	170	3,800	8
4-Chloroaniline	*	SOM01.2	170	2,500,000	2.2
Organonitrogen compounds					
Nitrobenzene	*	SOM01.2	170	100,000	5.8
Aniline	*	SOM01.2		300,000	8.6
2-Nitroaniline	*	SOM01.2	330	1,800,000	0.84
3-Nitroaniline	*	SOM01.2	330	82,000	1.16
4-Nitroaniline	*	SOM01.2	330	82,000	2.8
N-Nitrosodimethylamine	34	SVOC - MA		**34**	**96**
N-Nitrosodi-n-propylamine	*	SOM01.2	170	250	1.94
N-Nitrosodiphenylamine	*	SOM01.2	170	350,000	0.44
1,2-Diphenylhydrazine (as Azobenzene)	*			2,200	0.6
2,4-Dinitrotoluene	*	SOM01.2	170	1,200,000	0.5
2,6-Dinitrotoluene	*	SOM01.2	170	620,000	0.82
Carbazole	1,600	SOM01.2	170	1,600	0.86
Oxygen-Containing Compounds					
Benzoic Acid	*	SOM01.2		100,000,000	130
Benzyl Alcohol	*	SOM01.2		100,000,000	1.92
Dibenzofuran	*	SOM01.2	330	1,600,000	0.3
Isophorone	*	SOM01.2	170	510,000	0.82
Phenols and Substituted Phenols					
Phenol	50	SVOC - MA	**170**	50	1.48
2-Methylphenol	*	SOM01.2	170	31,000,000	1.42
3&4-Methylphenol	26	SVOC - MA	170	3,100,000	1.12
2,4-Dimethylphenol	*	SOM01.2	170	12,000,000	4.2
2-Chlorophenol	26	SVOC - MA	170	240,000	1.48
2,4-Dichlorophenol	16	SVOC - MA	170	1,800,000	0.6
2,4,5-Trichlorophenol	524	SOM01.2	170	62,000,000	0.86
2,4,6-Trichlorophenol	2	SVOC - MA	170	25,000	0.8
2,3,4,6-Tetrachlorophenol	*			18,000,000	1.52
2,3,5,6-Tetrachlorophenol	*			NE	1.08
Pentachlorophenol	30	SVOC - MA	**330**	250	2.4
4-Chloro-3-methylphenol	*	SOM01.2	170	NE	1.42
2-Nitrophenol	*	SOM01.2	170	NE	0.86
4-Nitrophenol	*	SOM01.2	330	NE	34
2,4-Dinitrophenol		SOM01.2	170	1,200,000	20
4,6-Dinitro-2-methylphenol	*	SOM01.2	330	62,000	3.6
Phthalate Esters					
Dimethyl phthalate	20,000	SOM01.2	170	100,000,000	0.86
Diethyl phthalate	600	SOM01.2	170	600	3
Di-n-butyl phthalate	60	SVOC - MA	**170**	60	5.2
Butyl benzyl phthalate	400	SOM01.2	170	100,000,000	6.2
Di-n-octyl phthalate	41	SVOC - MA	170	25,000,000	12
Bis(2-ethylhexyl)phthalate	3.4	SVOC - MA	170	330	8.4
Polycyclic Aromatic Hydrocarbons					
Naphthalene	24	SVOC - MA	170	176	0.44
2-Methylnaphthalene	200	SOM01.2	170	200	0.46
Acenaphthylene	200	SOM01.2	170	200	0.32
Acenaphthene	72	SVOC - MA	170	300	0.32
Fluorene	48	SVOC - MA	**170**	77.4	0.24
Phenanthrene	1170	SOM01.2	170	204	0.42
Anthracene	360	SOM01.2	**170**	57.2	0.28
Fluoranthene	48	SVOC - MA	170	423	0.24
Pyrene	36	SVOC - MA	170	195	0.28
Benzo(a)anthracene	2.6	SVOC - MA	**170**	108	0.34
Chrysene	2.6	SVOC - MA	170	166	0.28

Table 5-2 EPA Analytical Concentration Goals (ACGs)

Analyte	Target CRQLs EPA ACGs[a]	Method	SOW CRQL	Current LSS ACGs in QAPP Table A6-4	LSS lab MDL
Benzo(b)fluoranthene	2.6	SVOC - MA	170	2,100	0.82
Benzo(k)fluoranthene	2.6	SVOC - MA	170	1,300	0.26
Benzo(a)pyrene	2.6	SVOC - MA	**170**	150	0.42
Indeno(1,2,3-cd)pyrene	2.6	SVOC - MA	**170**	100	0.84
Dibenzo(a,h)anthracene	2.6	SVOC - MA	**170**	33	0.44
Benzo(g,h,i)perylene	300	SOM01.2	170	300	0.3
VOCs (µg/kg dry weight)					
1,1,1,2-Tetrachloroethane	*	SOM01.2	5	7,300	0.262
1,1,1-Trichloroethane	*	SOM01.2	5	1,200,000	0.23
1,1,2,2-Tetrachloroethane	*	SOM01.2	5	930	0.302
1,1,2-Trichloroethane	*	SOM01.2	5	1,600	0.152
1,1-Dichloroethane	*	SOM01.2	5	6,000	0.256
1,2,3-Trichloropropane	*	SOM01.2	5	76	0.798
1,2-Dichloroethane	*	SOM01.2	5	600	0.114
1,2-Dichloropropane	*	SOM01.2	5	740	0.128
1,4-Dichlorobenzene	*	SOM01.2	5	300	0.148
2-Butanone	*	SOM01.2	10	110,000,000	1.948
2-Chloroethyl vinyl ether	*			NE	0.672
2-Hexanone	*	SOM01.2	10	NE	0.622
4-Methyl-2-pentanone	*	SOM01.2	10	47,000,000	1.042
Acetone	*	SOM01.2	10	54,000,000	9.092
Acrolein	*			340	2.56
Acrylonitrile	*			120	1.624
Bromochloromethane	*	SOM01.2	5	NE	0.12
Bromodichloromethane	*	SOM01.2	5	1,800	0.156
Bromoform	*	SOM01.2	5	220,000	0.406
Bromomethane	*	SOM01.2	5	13,000	2.702
Carbon disulfide	*	SOM01.2	5	720,000	0.278
Carbon tetrachloride	*	SOM01.2	5	550	0.15
Chlorobenzene	*	SOM01.2	5	530,000	0.14
Chlorodibromomethane	*	SOM01.2	5	2,600	0.152
Chloroethane	*	SOM01.2	5	6,500	4.714
Chloroform	*	SOM01.2	5	2,000	0.174
Chloromethane	*	SOM01.2	5	160,000	0.574
cis-1,3-Dichloropropene	*	SOM01.2	5	NE	0.196
Dibromomethane	*	SOM01.2	5	230,000	0.232
Dibromodifluoromethane	*			310,000	0.264
Iodomethane	*			NE	0.216
Isopropylbenzene	*	SOM01.2	5	2,000,000	0.088
Naphthalene	*		170 - SVOC	21,000	1.262
Methylene chloride	*	SOM01.2	5	176	0.198
Styrene	*	SOM01.2	5	1,700,000	0.252
trans-1,4-Dichloro-2-butene	*			NE	2.04
Trichlorofluoromethane	*	SOM01.2	5	2,000,000	0.112
Vinyl Acetate	*	SOM01.2	5	1,400,000	0.284
1,1-Dichloroethene	*	SOM01.2	5	410,000	3
Benzene	*	SOM01.2	5	1,400	0.114
Ethylbenzene	*	SOM01.2	5	400,000	0.112
m,p-Xylene	*	SOM01.2	5	NE	0.234
Methyl tert-butyl ether	*	SOM01.2	5	70,000	0.118
o-Xylene	*	SOM01.2	5	NE	0.086
Tetrachloroethene	500	SOM01.2	5	500	0.384
Toluene	*	SOM01.2	5	520,000	0.144
trans-1,2-Dichloroethene	*	SOM01.2	5	230,000	0.172
trans-1,3-Dichloropropene	*	SOM01.2	5	NE	0.166
Trichloroethene	2,100	SOM01.2	5	2,100	0.094
Vinyl chloride	*	SOM01.2	5	750	0.174

Table 5-2 EPA Analytical Concentration Goals (ACGs)

Analyte	Target CRQLs EPA ACGs[a]	Method	SOW CRQL	Current LSS ACGs in QAPP Table A6-4	LSS lab MDL
Chlorinated Dioxins and Furans (pg/g dry weight)					
2,3,7,8-Tetrachlorodibenzo-p-dioxin	0.0011	DLM02.0 - MA		0.0091	**0.56**
1,2,3,7,8-Pentachlorodibenzo-p-dioxin	0.034	DLM02.0 - MA		0.27	**0.76**
1,2,3,6,7,8-Hexachlorodibenzo-p-dioxin	0.34	DLM02.0 - MA		2.7	1.18
1,2,3,4,7,8-Hexachlorodibenzo-p-dioxin	0.34	DLM02.0 - MA		2.7	1.04
1,2,3,7,8,9-Hexachlorodibenzo-p-dioxin	0.34	DLM02.0 - MA		2.7	1.38
1,2,3,4,6,7,8-Heptachlorodibenzo-p-dioxin	85	DLM02.0	85	690	1.22
1,2,3,4,6,7,8,9-Octachlorodibenzo-p-dioxin	2,800	DLM02.0	2,800	23,000	5.48
2,3,7,8-Tetrachlorodibenzofuran	0.094	DLM02.0 - MA		0.77	0.5
1,2,3,7,8-Pentachlorodibenzofuran	0.31	DLM02.0 - MA		2.6	0.78
2,3,4,7,8-Pentachlorodibenzofuran	0.0037	DLM02.0 - MA		0.03	**0.52**
1,2,3,6,7,8-Hexachlorodibenzofuran	0.34	DLM02.0 - MA		2.7	1.52
1,2,3,7,8,9-Hexachlorodibenzofuran	0.34	DLM02.0 - MA		2.7	1.24
1,2,3,4,7,8-Hexachlorodibenzofuran	0.34	DLM02.0 - MA		2.7	1.02
2,3,4,6,7,8-Hexachlorodibenzofuran	0.34	DLM02.0 - MA		2.7	1.38
1,2,3,4,6,7,8-Heptachlorodibenzofuran	85	DLM02.0	85	690	1.01
1,2,3,4,7,8,9-Heptachlorodibenzofuran	85	DLM02.0	85	690	1.26
1,2,3,4,6,7,8,9-Octachlorodibenzofuran	2,800	DLM02.0	2,800	23,000	1.62
Tributlytin (µg/kg dry weight)					
Tributyl Tin as TBT ion	10				
Asbestos[b] (%)					
Asbestos	1%	EPA 600/R-93/116			

Bolded cells indicate where MDL value is greater than the EPA ACG for sediment.
Note: Actual MDLs and CRQLs will vary based on the amount of sample volume used for each analysis, the analytical dilution, the amount of total solids in the sample, and analytical interferences.

* - No ACG available
ACG – analytical concentration goal (draft)
MDL – method detection limit - TestAmerica LSS QAPP
NE - not established
SOW - EPA CLP Statement of Work

[a]ACG Notes:
ACG is from Portland Harbor Round 1 QAPP (2002)
ACG is from ODEQ Guidance For Assessing Bioaccumulative Chemicals of Concern in Sediments
ACG is from EPA ODEQ Joint Source Control Strategy. The majority are PECs.
ACG is a Preliminary Remediation Goal calculated by the Portland Harbor Lower Willamette Group

If more than one guidance value was available, the ACG was selected using the following order of preference:
(1) The bioaccumulative ACGs for humans or wildlife from the ODEQ Guidance for Assessing Bioaccumulative COCs in Sediment (based upon 142 g/day fish consumption)
(2) The bioaccumulative ACGs for humans from the Portland Harbor RI 2002 QAPP
(3) The values from the JSCS (usually PECs) for soil/stormwater sediment
(4) The value for carcinogenic PAHs are based on the preliminary PRGs from the LWG for Portland Harbor
(5) All background values are preliminary based on the Portland Harbor RI data. Analytical results should be well below these background values as they are just preliminary and may decrease in the future.

[b] Asbestos analysis should be done by piont count rather than visual estimate

Appendix A
CDM Federal Standard Operating Procedures

Sample Custody	SOP 1-2 Revision: 5 Date: March 2007

Prepared: David O. Johnson

Technical Review: S. Budney

E-Signed by Michael C. Malloy
VERIFY authenticity with ApproveIt

QA Review: Jo Nell Mullins

Approved:

Signature/Date

E-Signed by P. Michael Schwan
VERIFY authenticity with ApproveIt

Issued:

Signature/Date

1.0 Objective

Because of the evidentiary nature of samples collected during environmental investigations, possession must be traceable from the time the samples are collected until their derived data are introduced as evidence in legal proceedings. To maintain and document sample possession, sample custody procedures are followed. All paperwork associated with the sample custody procedures will be retained in CDM Federal Programs Corporation (CDM) files unless the client requests that it be transferred to them for use in legal proceedings or at the completion of the contract.

Note: Sample custody documentation requirements vary with the specific EPA region or client. This SOP is intended to present basic sample custody requirements, along with common options. Specific sample custody requirements shall be presented in the project-specific quality assurance (QA) project plan or project-specific modification or clarification form (see Section U-1).

2.0 Background

2.1 Definitions

Sample - A sample is material to be analyzed that is contained in single or multiple containers representing a unique sample identification number.

Sample Custody - A sample is under custody if:

1. It is in your possession
2. It is in your view, after being in your possession
3. It was in your possession and you locked it up
4. It is in a designated secure area

Chain-of-Custody Record - A chain-of-custody record is a form used to document the transfer of custody of samples from one individual to another.

Custody Seal - A custody seal is a tape-like seal that is part of the chain-of-custody process and is used to detect tampering with samples after they have been packed for shipping.

Sample Label - A sample label is an adhesive label placed on sample containers to designate a sample identification number and other sampling information.

Sample Tag - A sample tag is attached with string to a sample container to designate a sample identification number and other sampling information. Tags may be used when it is difficult to physically place adhesive labels on the container (e.g., in the case of small air sampling tubes).

3.0 General Responsibilities

Sampler - The sampler is personally responsible for the care and custody of the samples collected until they are properly transferred or dispatched.

Field Team Leader - The field team leader (FTL) is responsible for ensuring that strict chain-of-custody procedures are maintained during all sampling events. The FTL is also responsible for coordinating with the subcontractor laboratory to

ensure that adequate information is recorded on custody records. The FTL determines whether proper custody procedures were followed during the fieldwork.

Field Sample Custodian - The field sample custodian, when designated by the FTL, is responsible for accepting custody of samples from the sampler(s) and properly packing and shipping the samples to the laboratory assigned to do the analyses. A field sample custodian is typically designated only for large and complex field efforts.

Note: Responsibilities may vary from site to site. Therefore, all field team member responsibilities shall be defined in the field plan or site/quality assurance project plan (QAPP).

4.0 Required Supplies

- Chain-of-custody records (applicable client or CDM forms)
- Sample labels and/or tags
- EPA Field Operations Records Management System II Lite™ (FORMS II Lite™) software (if required)
- Printer paper
- Custody seals
- Clear tape
- Computer
- Printer

5.0 Procedures

5.1 Chain-of-Custody Record

This procedure establishes a method for maintaining custody of samples through use of a chain-of-custody record. This procedure will be followed for all samples collected or split samples accepted.

Field Custody

1. Collect only the number of samples needed to represent the media being sampled. To the extent possible, determine the quantity and types of samples and sample locations before the actual fieldwork. As few people as possible shall handle samples.

2. Complete sample labels or tags for each sample using waterproof ink.

3. Maintain personal custody of the samples (in your possession) at all times until custody is transferred for sample shipment or directly to the analytical laboratory.

Transfer of Custody and Shipment

1. Complete a chain-of-custody record for all samples (see Figure 1 for an example of a chain-of-custody record. Similar forms may be used when requested by the client). When transferring the possession of samples, the individuals relinquishing and receiving will sign, date, and note the time on the record. This record documents sample custody transfer from the sampler, often through another person, to the sample custodian in the appropriate laboratory.

   - The date/time will be the same for both signatures when custody is transferred directly to another person. When samples are shipped via common carrier (e.g., Federal Express), the date/time will not be the same for both signatures. Common carriers are not required to sign the chain-of-custody record.

   - In all cases, it must be readily apparent that the person who received custody is the same person who relinquished custody to the next custodian.

   - If samples are left unattended or a person refuses to sign, this must be documented and explained on the chain-of-custody record.

Note: If a field sample custodian has been designated, he/she may initiate the chain-of-custody record, sign, and date as the relinquisher. The individual sampler(s) must sign in the appropriate block, but does (do) not need to sign and date as a relinquisher (refer to Figure 1).

2. Package samples properly for shipment and dispatch to the appropriate laboratory for analysis. Each shipment must be accompanied by a separate chain-of-custody record. If a shipment consists of multiple coolers, a chain-of-custody record shall be filled out for each cooler documenting only samples contained in that particular cooler.

3. The original record will accompany the shipment, and the copies will be retained by the FTL and, if applicable, distributed to the appropriate sample coordinators. Freight bills will also be retained by the FTL as part of the permanent documentation. The shipping number from the freight bill shall be recorded on the applicable chain-of-custody record and field logbook in accordance with TSOP 4-1, *Field Logbook Content and Control*.

Procedure for Completing CDM Example Chain-of-Custody Record
The following procedure is to be used to fill out the CDM chain-of-custody record. The record provided herein (Figure 1) is an example chain-of-custody record. If another type of custody record (i.e., provided by the EPA Contract Laboratory Program (CLP) or a subcontract laboratory or generated by FORMS II Lite™) is used to track the custody of samples, the custody record shall be filled out in its entirety.

1. Record project number.
2. Record FTL for the project (if a field sample custodian has been designated, also record this name in the “Remarks” box).
3. Record the name and address of the laboratory to which samples are being shipped.
4. Enter the project name/location or code number.
5. Record overnight courier’s airbill number.
6. Record sample location number.
7. Record sample number.
8. Note preservatives added to the sample.
9. Note media type (matrix) of the sample.
10. Note sample type (grab or composite).
11. Enter date of sample collection.
12. Enter time of sample collection in military time.
13. When required by the client, enter the names or initials of the samplers next to the sample location number of the sample they collected.
14. List parameters for analysis and the number of containers submitted for each analysis.
15. Enter appropriate designation for laboratory quality control (e.g., matrix spike/matrix spike duplicate [MS/MSD], matrix spike/duplicate [MS/D]), or other remarks (e.g., sample depth).
16. Sign the chain-of-custody record(s) in the space provided. All samplers must sign each record.
17. If sample tags are used, record the sample tag number in the “Remarks” column.
18. The originator checks information entered in Items 1 through 16 and then signs the top left “Relinquished by” box, prints his/her name, and enters the current date and time (military).
19. Send the top two copies (usually white and yellow) with the samples to the laboratory; retain the third copy (usually pink) for the project files. Retain additional copies for the project file or distribute as required to the appropriate sample coordinators.
20. The laboratory sample custodian receiving the sample shipment checks the sample label information against the chain-of-custody record. Sample condition is checked and anything unusual is noted under “Remarks” on the chain-of-custody record. The laboratory custodian receiving custody signs in the adjacent “Received by” box and keeps the copy. The white copy is returned to CDM.

5.2 Sample Labels and Tags

Unless the client directs otherwise, sample labels or tags will be used for all samples collected or accepted for CDM projects.

1. Complete one label or tag with the information required by the client for each sample container collected. A typical label or tag would be completed as follows (see Figure 2 for example of sample tag; labels are completed with the equivalent information):

   - Record the project code (i.e., project or task number).
   - Enter the station number (sample number or EPA CLP identification number) if applicable.
   - Record the date to indicate the month, day, and year of sample collection.
   - Enter the time (military) of sample collection.

- Place a check to indicate composite or grab sample.
- Record the station (sample) location.
- Sign in the space provided.
- Place a check next to “yes” or “no” to indicate if a preservative was added.
- Place a check under “Analyses” next to the parameters for which the sample is to be analyzed. If the desired analysis is not listed, write it in the empty slot. Note: Do not write in the box for “laboratory sample number.”
- Place or write additional relevant information under “Remarks.”

2. Place adhesive labels directly on the sample containers. Place clear tape over the label to protect from moisture.

3. Securely attach sample tags to the sample bottle. On 2.27 liter (80 oz.) amber bottles, the tag string may be looped through the ring-style handle and tied. On all other containers, it is recommended that the string be looped around the neck of the bottle, then twisted, and relooped around the neck until the slack in the string is removed.

4. Double-check that the information recorded on the sample tag is consistent with the information recorded on the chain-of-custody record.

5.3 Custody Seals

Two custody seals must be placed on opposite corners of all shipping containers (e.g., cooler) before shipment. The seals shall be signed and dated by the shipper.

Custody seals may also be required to be placed on individual sample bottles. Check with the client or refer to EPA regional guidelines for direction.

5.4 Sample Shipping

CDM Federal SOP 2-1, *Packaging and Shipping Environmental Samples* defines the requirements for packaging and shipping environmental samples.

6.0 Restrictions/Limitations

Check with the EPA region or client for specific guidelines. If no specific guidelines are identified, this procedure shall be followed.

For EPA CLP sampling events, combined chain-of-custody/traffic report forms generated with EPA FORMS II Lite™ or other EPA-specific records may be used. Refer to regional guidelines for completing these forms.

The EPA FORMS II Lite™ software may be used to customize sample labels and custody records when directed by the client or the CDM project manager.

7.0 References

U. S. Army Corps of Engineers. 2001. *Requirements for the Preparation of Sampling and Analysis Plan*, EM 200-1-3. Appendix F. February.

U. S. Environmental Protection Agency. Revised March 1992. *National Enforcement Investigations Center, Multi-Media Investigation Manual*, EPA-330/9-89-003-R. p.85.

_____. Region IV. 1996. *Environmental Investigations Standard Operating Procedures and Quality Assurance Manual*. Section 3.3. May.

_____. 2002. *FORMS II Lite™ User’s Guide, Version 5.1*.

_____. 2002. *EPA Guidance for Quality Assurance Project Plans*, EPA QA/G-5, EPA/240/R-02/009. Section 2.2.3. December.

_____. 2004. *Contract Laboratory Program (CLP), Guidance for Field Samplers,* EPA-540-R-00-003. Final. Section 3.2. August.

Figure 1
Example CDM Chain-of-Custody Record

CDM

125 Maiden Lane, 5th Floor
New York, NY 10038
(212) 785-9123
Fax: (212) 785-6114

CHAIN OF CUSTODY RECORD

PROJECT ID.	FIELD TEAM LEADER	LABORATORY AND ADDRESS	DATE SHIPPED
PROJECT NAME/LOCATION		LAB CONTRACT:	AIRBILL NO.

MEDIA TYPE
1. Surface Water
2. Groundwater
3. Leachate
4. Field QC
5. Soil/Sediment
6. Oil
7. Waste
8. Other _____

PRESERVATIVES
1. HCl, pH <2
2. HNO3, pH <2
3. NaOH, pH >12
4. H2SO4, pH <2
5. Zinc Acetate, pH >9
6. Ice Only
7. Not Preserved
8. Other _____

SAMPLE TYPE
G = Grab
C = Composite

SAMPLE LOCATION NO.	LABORATORY SAMPLE NUMBER	PRESER-VATIVES ADDED	MEDIA TYPE	SAMPLE TYPE	20_ _ DATE	TIME SAMPLED	ANALYSES (List no. of containers submitted)								REMARKS (Note if MS/MSD)
1.															
2.															
3.															
4.															
5.															
6.															
7.															
8.															
9.															
10.															

SAMPLER SIGNATURES:

RELINQUISHED BY: (PRINT)	DATE/TIME	RECEIVED BY: (PRINT)	DATE/TIME	RELINQUISHED BY: (PRINT)	DATE/TIME	RECEIVED BY: (PRINT)	DATE/TIME
(SIGN)		(SIGN)		(SIGN)		(SIGN)	
RELINQUISHED BY: (PRINT)	DATE/TIME	RECEIVED BY: (PRINT)	DATE/TIME	RELINQUISHED BY: (PRINT)	DATE/TIME	RECEIVED BY: (PRINT)	DATE/TIME
(SIGN)		(SIGN)		(SIGN)		(SIGN)	

COMMENTS:

DISTRIBUTION: White and yellow copies accompany sample shipment to laboratory; yellow copy retained by laboratory. Pink copy retained by samplers.

1/98

Note: If requested by the client, different chain-of-custody records may be used. Copies of the template for this record may be obtained from the Chantilly Graphics Department.

Figure 2
Example Sample Tag

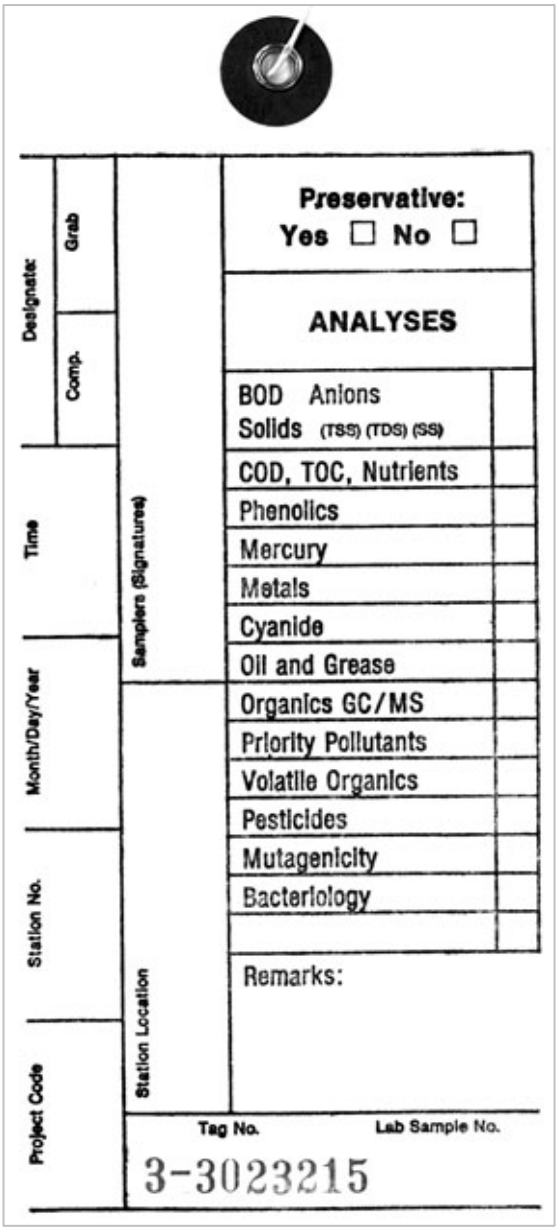

Note: Equivalent sample labels or tags may be used.

Packaging and Shipping Environmental Samples

SOP 2-1
Revision: 3
Date: March 2007

Prepared: Krista Lippoldt

Technical Review: Chuck Myers

E-Signed by Michael C. Malloy
VERIFY authenticity with ApproveIt

QA Review: Jo Nell Mullins

E-Signed by P. Michael Schwan
VERIFY authenticity with ApproveIt

Approved:

Signature/Date

Issued:

Signature/Date

1.0 Objective

The objective of this SOP is to outline the requirements for the packaging and shipment of environmental samples. Additionally, Sections 2.0 through 7.0 outline requirements for the packaging and shipping of regulated environmental samples under the Department of Transportation (DOT) Hazardous Materials Regulations, the International Air Transportation Association (IATA), and International Civil Aviation Organization (ICAO) Dangerous Goods Regulations for shipment by air and applies only to domestic shipments. This SOP does not cover the requirements for packaging and shipment of equipment (including data loggers and self-contained breathing apparatus [SCBAs] or bulk chemicals that are regulated under the DOT, IATA, and ICAO.

1.1 Packaging and Shipping of All Samples

This standard operating procedure (SOP) applies to the packaging and shipping of all environmental samples. If the sample is preserved or radioactive, the following sections may also be applicable.

Section 2.0 - Packaging and Shipping Samples Preserved with Methanol
Section 3.0 - Packaging and Shipping Samples Preserved with Sodium Hydroxide
Section 4.0 - Packaging and Shipping Samples Preserved with Hydrochloric Acid
Section 5.0 - Packaging and Shipping Samples Preserved with Nitric Acid
Section 6.0 - Packaging and Shipping Samples Preserved with Sulfuric Acid
Section 7.0 - Packaging and Shipping Limited-Quantity Radioactive Samples

1.2 Background

1.2.1 Definitions

Environmental Sample - An aliquot of air, water, plant material, sediment, or soil that represents the contaminant levels on a site. Samples of potential contaminant sources, like tanks, lagoons, or non-aqueous phase liquids are normally not “environmental” for this purpose. This procedure applies only to environmental samples that contain less than reportable quantities for any foreseeable hazardous constituents according to DOT regulations promulgated in 49 CFR - Part 172.101 Appendix A.

Custody Seal - A custody seal is a narrow adhesive-backed seal that is applied to individual sample containers and/or the container (i.e., cooler) before offsite shipment. Custody seals are used to demonstrate that sample integrity has not been compromised during transportation from the field to the analytical laboratory.

Inside Container - The container, normally made of glass or plastic, that actually contacts the shipped material. Its purpose is to keep the sample from mixing with the ambient environment.

Outside Container - The container, normally made of metal or plastic, that the transporter contacts. Its purpose is to protect the inside container.

Secondary Containment - The outside container provides secondary containment if the inside container breaks (i.e., plastic overpackaging if liquid sample is collected in glass).

Excepted Quantity - Excepted quantities are limits to the mass or volume of a hazardous material in the inside and outside containers below which DOT, IATA, ICAO regulations do not apply. The excepted quantity limits are very low. Most regulated shipments will be made under limited quantity.

Limited Quantity - Limited quantity is the maximum amount of a hazardous material below which there are specific labeling or packaging exceptions.

Performance Testing - Performance testing is the required testing of outer packaging. These tests include drop and stacking tests.

Qualified Shipper - A qualified shipper is a person who has been adequately trained to perform the functions of shipping hazardous materials.

1.2.2 Associated Procedures

- CDM Federal SOP 1-2, *Sample Custody*

1.2.3 Discussion

Proper packaging and shipping is necessary to ensure the protection of the integrity of environmental samples shipped for analysis. These shipments are potentially subject to regulations published by DOT, IATA, or ICAO. Failure to abide by these rules places both CDM and the individual employee at risk of serious fines. The analytical holding times for the samples must not be exceeded. The samples shall be packed in time to be shipped for overnight delivery. Make arrangements with the laboratory before sending samples for weekend delivery.

1.3 Required Equipment

- Coolers with return address of the appropriate CDM office
- Heavy-duty plastic garbage bags
- Plastic zip-type bags, small and large
- Clear tape
- Nylon reinforced strapping tape
- Duct tape
- Vermiculite (or an equivalent nonflammable material that is inert and absorbent)*
- Bubble wrap (optional)
- Ice
- Custody seals
- Completed chain-of-custody record or contract laboratory program (CLP) custody records, if applicable
- Completed bill of lading
- “This End Up” and directional arrow labels

*Check for any client-specific or laboratory requirements related to the use of absorbent packaging materials.

1.4 Packaging Environmental Samples

The following steps must be followed when packing sample bottles and jars for shipment:

1. Verify the samples undergoing shipment meet the definition of “environmental sample” and are not a hazardous material as defined by DOT. Professional judgment and/or consultation with qualified persons such as the appropriate health and safety coordinator or the health and safety manager shall be observed.

2. Select a sturdy cooler in good repair. Tape any interior opening in the cooler (drain plug) from the inside to ensure control of interior contents. Also, tape the drain plug from the outside of the cooler. Line the cooler with a large heavy-duty plastic garbage bag.

3. Be sure the caps on all bottles are tight (will not leak); check to see that labels and chain-of-custody records are completed properly (SOP 1-2, Sample Custody).

4. Place all bottles in separate and appropriately sized plastic zip-top bags and close the bags. Up to three VOA vials may be packed in one bag. Binding the vials together with a rubber band on the outside of the bag, or separating them so that they do not contact each other, will reduce the risk of breakage. Bottles may be wrapped in bubble wrap. Optionally, place three to six VOA vials in a quart metal can and then fill the can with vermiculite or equivalent. ***Note***: Trip blanks must be included in coolers containing VOA samples.

5. Place 2 to 4 inches of vermiculite (or equivalent) into a cooler that has been lined with a garbage bag, and then place the bottles and cans in the bag with sufficient space to allow for the addition of packing material between the bottles and cans. It is preferable to place glass sample bottles and jars into the cooler vertically. Glass containers are less likely to break when packed vertically rather than horizontally.

6. While placing sample containers into the cooler, conduct an inventory of the contents of the shipping cooler against the chain-of-custody record. The chain-of-custody with the cooler shall reflect only those samples within the cooler.

7. Put ice in large plastic zip-top bags (double bagging the zip-tops is preferred) and properly seal. Place the ice bags on top of and/or between the samples. Several bags of ice are required (dependant on outdoor temperature, staging time, etc.) to maintain the cooler temperature at approximately 4° Celsius (C) if the analytical method requires cooling. Fill all remaining space between the bottles or cans with packing material. Securely fasten the top of the large garbage bag with fiber or duct tape.

8. Place the completed chain-of-custody record or the CLP traffic report form (if applicable) for the laboratory into a plastic zip-top bag, seal the bag, tape the bag to the inner side of the cooler lid and close the cooler.

9. The cooler lid shall be secured with nylon reinforced strapping tape by wrapping each end of the cooler a minimum of two times. Attach a completed chain-of-custody seal across the opening of the cooler on opposite sides. The custody seals shall be affixed to the cooler with half of the seal on the strapping tape so that the cooler cannot be opened without breaking the seal. Complete two more wraps around with fiber tape and place clear tape over the custody seals.

10. The shipping container lid must be marked **"THIS END UP"** and arrow labels that indicate the proper upward position of the container shall be affixed to the cooler. A label containing the name and address of the shipper (CDM) shall be placed on the outside of the container. Labels used in the shipment of hazardous materials (such as Cargo Only Air Craft, Flammable Solids, etc.) are not permitted on the outside of containers used to transport environmental samples and shall not be used. The name and address of the laboratory shall be placed on the container, or when shipping by common courier, the bill of lading shall be completed and attached to the lid of the shipping container.

2.0 Packaging and Shipping Samples Preserved with Methanol

2.1 Containers

- The maximum volume of methanol in a sample container is limited to 30 ml.
- The sample container must not be full of methanol.

2.2 Responsibility

It is the responsibility of the qualified shipper to:

- Ensure that the samples undergoing shipment contain no other contaminant that meets the definition of "hazardous material" as defined by DOT
- Determine the amount of preservative in each sample so that accurate determination of quantities can be made

Note: Responsibilities may vary from site to site. Therefore, all field team member responsibilities shall be defined in the field plan or site-/project-specific quality assurance project plan (QAPP).

2.3 Additional Required Equipment

The following equipment is needed in addition to the required equipment listed in Section 1.3:

- Inner packing may consist of glass or plastic jars
- Outer packaging (for limited quantities) insulated cooler that has passed the ICAO drop test
- Survey documentation (if shipping from Department of Energy [DOE] or radiological sites)
- Class 3 flammable liquid labels
- Orientation labels
- Consignor/consignee labels

2.4 Packaging Samples Preserved with Methanol

The following steps are to be followed when packaging limited-quantity sample shipments:

- Tape any interior opening in the cooler (drain plug) from the inside to ensure control of interior contents. Also, tape the drain plug from the outside of the cooler.
- All sample containers will be properly labeled and the label protected with waterproof tape before sampling.
- At a minimum the label must contain:
  - Project name
  - Project number
  - Date and time of sample collection
  - Sample location
  - Sample identification number
  - Collector's initials
  - Preservative (note amount of preservative used in miscellaneous section of the chain-of-custody form)
- Wrap each container (40-ml VOA vials) in bubble wrap (secure with waterproof tape) to prevent breakage.
- Place the bubble-wrapped container into a 2.7-mil zip-type bag, removing trapped air.
- Place wrapped containers inside a polyethylene bottle filled with vermiculite; seal the bottle. (Maximum of 4 VOA vials will fit inside a 500-ml wide-mouth polyethylene bottle.)
- Total volume of methanol per shipping container must not exceed 500 ml.
- Place sufficient amount of vermiculite in the bottom of the cooler to absorb any leakage that may occur.
- Place a garbage bag in the cooler.
- Pack the samples appropriately inside the garbage bag (bottles placed upright) to prevent movement during shipment.
- Place a sufficient amount of double-bagged ice around the samples to maintain the required temperature during shipment.
- Seal the garbage bag by tieing or taping.
- The maximum weight of the cooler shall not exceed 30 kg (66 lbs) for any limited-quantity shipment of dangerous goods.
- Secure the chain-of-custody form (placed inside a zip-type bag) to the interior of the cooler lid.
- If the shipment is from a DOE or other facility, place the results of the radiation screen and cooler/sample survey with the chain-of-custody.
- Wrap strapping tape or duct tape around both ends of the cooler and around the cooler lid.
- Affix custody seals to opposite sides of the cooler lid. Cover the custody seals with clear waterproof tape.
- Mark the outside of the cooler with the proper shipping name of the contents, corresponding UN number, and LTD. QTY. (as shown below).

  Methanol Mixture
  UN1230
  LTD. QTY.

- Place a label on the front of the cooler with the company name, contact name, phone number, full street address, and state with zip code for both shipper and recipient.
- Affix a Flammable Liquid label to the outside of the cooler.
- Affix package orientation labels on two opposite sides of the cooler.
- Secure the marking and labels to the surface of the cooler with clear waterproof tape to prevent accidental removal during shipment.
- An example of cooler labeling/marking locations is shown in Figure 1.

Note: No marking or labeling can be obscured by strapping or duct tape.
Note: The inner packaging of dangerous goods must be placed into the designated cooler for shipment. Other nonregulated environmental samples may be added to the cooler for shipment.

- When shipping from a DOE facility, the cooler will be surveyed by a qualified radiation control technician to ensure that radiation flux on exterior surfaces does not exceed 0.5 mrem/h on all sides. This survey will be documented and the results reviewed by the qualified shipper.
- Complete the Dangerous Goods and Hazardous Materials Inspection Checklist for Shipping Limited-Quantity (Appendix A).
- Complete a Dangerous Goods Airbill.

Figure 1
Example of Cooler Label/Marking Locations

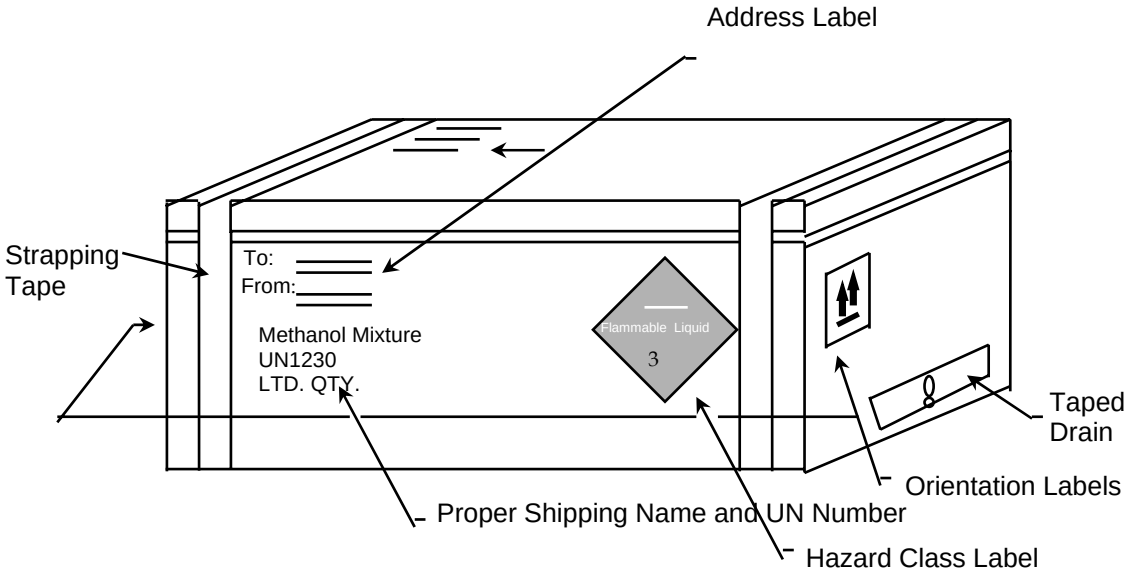

3.0 Packaging and Shipping Samples Preserved with Sodium Hydroxide

3.1 Containers

The inner packaging container (and amount of preservative) that may be used for these shipments includes:

Excepted Quantities of Sodium Hydroxide Preservatives

Preservative		*Desired in Final Sample*		*Quantity of Preservative (ml) for Specified Container*				
		pH	**Conc.**	**40 ml**	**125 ml**	**250 ml**	**500 ml**	**1 L**
NaOH	30%	>12	0.08%		.25	0.5	1	2

5 drops = 1 ml

3.2 Responsibility

It is the responsibility of the qualified shipper to determine the amount of preservative in each sample so that accurate determination of quantities can be made.

Note: Responsibilities may vary from site to site. Therefore, all field team member responsibilities shall be defined in the field plan or site-/project-specific quality assurance project plan (QAPP).

3.3 Additional Required Equipment

The following equipment is needed in addition to the required equipment listed in Section 1.3:

- Outer packaging (for limited quantities) insulated cooler that has passed the ICAO drop test
- Inner packings may consist of glass or plastic jars no larger than 1 pint
- Survey documentation (if shipping from DOE or radiological sites)
- Class 8 corrosive labels
- Orientation labels
- Consignor/consignee labels

3.4 Packaging Samples Preserved with Sodium Hydroxide

Samples containing NaOH as a preservative that exceed the excepted concentration of 0.08 percent (2 ml of a 30 percent NaOH solution per liter) may be shipped as a limited quantity per packing instruction Y819 of the IATA/ICAO Dangerous Goods Regulations.

The following steps are to be followed when packaging limited-quantity samples shipments:

- Tape any interior opening in the cooler (drain plug) from the inside to ensure control of interior contents. Also, tape the drain plug from the outside of the cooler.
- All sample containers will be properly labeled and the label protected with waterproof tape before sampling.
- At a minimum the label must contain:
  - Project name
  - Project number
  - Date and time of sample collection
  - Sample location
  - Sample identification number
  - Collector's initials
  - Preservative (note amount of preservative used in miscellaneous section of the chain-of-custody form)
- This step is optional; wrap each container in bubble wrap (secure with waterproof tape) to prevent breakage.
- Place the bubble-wrapped container into a 2.7-mil zip-type bag, removing trapped air.
- Place glass containers inside a polyethylene bottle filled with vermiculite; seal the bottle.
- The total volume of sample in each cooler must not exceed 1 liter.
- Place sufficient amount of vermiculite in the bottom of the cooler to absorb any leakage that may occur.
- Place a garbage bag in the cooler.
- Pack the samples appropriately inside the garbage bag (bottles placed upright) to prevent movement during shipment.
- Place sufficient amount of double-bagged ice around the samples to maintain the required temperature during shipment.
- Seal the garbage bag by tieing or taping.
- The maximum weight of the cooler shall not exceed 30 kg (66 lbs) for any limited-quantity shipment of dangerous goods.
- Secure the chain-of-custody form (placed inside a zip-type bag) to the interior of the cooler lid.
- If the shipment is from a DOE or other facility, place the results of the radiation screen and cooler/sample survey with the chain-of-custody.
- Wrap strapping tape or duct tape around both ends of the cooler and around the cooler lid.
- Affix custody seals to opposite sides of the cooler lid. Cover the custody seals with clear waterproof tape.
- Mark the outside of the cooler with the proper shipping name of the contents, corresponding UN number, and LTD. QTY. (as shown below).

  Sodium Hydroxide Solution
  UN1824
  LTD. QTY.

- Place a label on the front of the cooler with the company name, contact name, phone number, full street address, and state with zip code for both shipper and recipient.
- Affix a Corrosive label to the outside of the cooler.
- Affix package orientation labels on two opposite sides of the cooler.
- Secure the marking and labels to the surface of the cooler with clear waterproof tape to prevent accidental removal during shipment.
- An example of cooler labeling/marking locations is shown in Figure 1.

Note: Samples meeting the exception concentration of 0.08 percent NaOH by weight may be shipped as nonregulated or nonhazardous following the procedure in Section 1.4.

Note: No marking or labeling can be obscured by strapping or duct tape.

Note: The inner packaging of dangerous goods must be placed into the designated cooler for shipment. Other nonregulated environmental samples may be added to the cooler for shipment.

- When shipping from a DOE facility, the cooler will be surveyed by a qualified radiation control technician to ensure that radiation flux on exterior surfaces does not exceed 0.5 mrem/h on all sides. This survey will be documented and the results reviewed by the qualified shipper.
- Complete the Dangerous Goods and Hazardous Materials Inspection Checklist for Shipping Limited-Quantity (Appendix A).
- Complete a Dangerous Goods Airbill.

4.0 Packaging and Shipping Samples Preserved with Hydrochloric Acid

4.1 Containers

The inner packaging container (and amount of preservative) that may be used for these shipments includes:

Excepted Quantities of Hydrochloric Acid Preservatives

Preservative		*Desired in Final Sample*		*Quantity of Preservative (ml) for Specified Container*		
		pH	**Conc.**	**40 ml**	**125 ml**	**250 ml**
HCl	2N	<1.96	0.04%	.2	.5	1

5 drops = 1 ml

4.2 Responsibility

It is the responsibility of the qualified shipper to:

- Determine the samples undergoing shipment contain no other contaminant that meets the definition of hazardous material as defined by DOT
- Determine the amount of preservative in each sample so that accurate determination of quantities can be made

Note: Responsibilities may vary from site to site. Therefore, all field team member responsibilities shall be defined in the field plan or site-/project-specific quality assurance project plan (QAPP).

4.3 Additional Required Equipment

The following equipment is needed in addition to the required equipment listed in Section 1.3.

- Inner packing may consist of glass or plastic jars no larger than 1 pint.
- Outer packaging (for limited quantities) insulated cooler that has passed the ICAO drop test.
- Survey documentation (if shipping from DOE or radiological sites)
- Class 8 corrosive labels
- Orientation labels
- Consignor/consignee labels

4.4 Packaging Samples Preserved with Hydrochloric Acid

The following steps are to be followed when packaging limited-quantity sample shipments:

- Tape any interior opening in the cooler (drain plug) from the inside to ensure control of interior contents. Also, tape the drain plug from the outside of the cooler.
- All sample containers will be properly labeled and the label protected with waterproof tape before sampling.
- At a minimum the label must contain:
  - Project name
  - Project number
  - Date and time of sample collection
  - Sample location
  - Sample identification number
  - Collector's initials
  - Preservative (note amount of preservative used in miscellaneous section of the chain-of-custody form)
- Wrap each container (40-ml VOA vials) in bubble wrap (secure with waterproof tape) to prevent breakage.
- Place the bubble-wrapped container into a 2.7-mil zip-type bag, removing trapped air.
- Place wrapped containers inside a polyethylene bottle filled with vermiculite; seal the bottle. (No more than 4 VOA vials will fit inside a 500-ml wide-mouth polyethylene bottle.)

- Total volume of sample inside each cooler must not exceed 1 liter.
- Place sufficient amount of vermiculite in the bottom of the cooler to absorb any leakage that may occur.
- Place a garbage bag in the cooler.
- Pack the samples appropriately inside the garbage bag (bottles placed upright) to prevent movement during shipment.
- Place sufficient amount of double-bagged ice around the samples to maintain the required temperature during shipment.
- Seal the garbage bag by tieing or taping.
- The maximum weight of the cooler shall not exceed 30 kg (66 lbs) for any limited-quantity shipment of dangerous goods.
- Secure the chain-of-custody form (placed inside a zip-type bag) to the interior of the cooler lid.
- If the shipment is from a DOE or other facility, place the results of the radiation screen and cooler/sample survey with the chain-of-custody.
- Wrap strapping tape or duct tape around both ends of the cooler and around the cooler lid.
- Affix custody seals to opposite sides of the cooler lid. Cover the custody seals with clear waterproof tape.
- Mark the outside of the cooler with the proper shipping name of the contents, corresponding UN number, and LTD. QTY. (as shown below).

Hydrochloric Acid Solution
UN1789
LTD. QTY.

- Place a label on the front of the cooler with the company name, contact name, phone number, full street address, and state with zip code for both shipper and recipient.
- Affix a Corrosive label to the outside of the cooler.
- Affix package orientation labels on two opposite sides of the cooler.
- Secure the marking and labels to the surface of the cooler with clear waterproof tape to prevent accidental removal during shipment.
- An example of cooler labeling/marking locations is shown in Figure 1.

Note: Samples containing less than the exception concentration of 0.04 percent HCl by weight will be shipped as nonregulated or nonhazardous following the procedure in Section 1.4.

Note: No marking or labeling can be obscured by strapping or duct tape.

Note: The inner packaging of dangerous goods must be placed into the designated cooler for shipment. Other nonregulated environmental samples may be added to the cooler for shipment.

- When shipping from a DOE facility, the cooler will be surveyed by a qualified radiation control technician to ensure that radiation flux on exterior surfaces does not exceed 0.5 mrem/h on all sides. This survey will be documented and the results reviewed by the qualified shipper.
- Complete the Dangerous Goods and Hazardous Materials Inspection Checklist for Shipping Limited-Quantity (Appendix A).
- Complete a Dangerous Goods Airbill.

5.0 Packaging and Shipping Samples Preserved with Nitric Acid

5.1 Containers

The inner packaging container (and amount of preservative) that may be used for these shipments includes:

Excepted Quantities of Nitric Acid Preservatives

Preservative		*Desired in Final Sample*		*Quantity of Preservative (ml) for Specified Container*				
		pH	**Conc.**	**40 ml**	**125 ml**	**250 ml**	**500 ml**	**1 L**
HNO_3	6N	<1.62	0.15%		2	4	5	8

5 drops = 1 mg/L

5.2 Responsibility

It is the responsibility of the qualified shipper to:

- Determine the samples undergoing shipment contain no other contaminant that meets the definition of hazardous material as defined by DOT
- Determine the amount of preservative in each sample so that accurate determination of quantities can be made

Note: Responsibilities may vary from site to site. Therefore, all field team member responsibilities shall be defined in the field plan or site-/project-specific quality assurance project plan (QAPP).

5.3 Additional Required Equipment

The following equipment is needed in addition to the required equipment listed in Section 1.3:

- Inner packings may consist of glass or plastic jars no larger than 100 ml.
- Outer packaging (for limited quantities) insulated cooler that has passed the ICAO drop test.
- Survey documentation (if shipping from DOE or radiological sites)
- Class 8 corrosive labels
- Orientation labels
- Consignor/consignee labels

5.4 Packaging Samples Preserved with Nitric Acid

Samples containing HNO_3 as a preservative that exceed the excepted concentration of 0.15 percent HNO_3 will be shipped as a limited quantity per packing instruction Y807 of the IATA/ICAO Dangerous Goods Regulations.

The following steps are to be followed when packaging limited-quantity sample shipments:

- Tape any interior opening in the cooler (drain plug) from the inside to ensure control of interior contents. Also, tape the drain plug from the outside of the cooler.
- All sample containers will be properly labeled and the label protected with waterproof tape before sampling.
- At a minimum the label must contain:
  - Project name
  - Project number
  - Date and time of sample collection
  - Sample location
  - Sample identification number
  - Collector's initials
  - Preservative (note amount of preservative used in miscellaneous section of the chain-of-custody form)
- This step is optional; wrap each container in bubble wrap (secure with waterproof tape) to prevent breakage.
- Place the bubble-wrapped container into a 2.7-mil zip-type bag, removing trapped air.
- Place glass containers inside a polyethylene bottle filled with vermiculite; seal the bottle.
- Place sufficient amount of vermiculite in the bottom of the cooler to absorb any leakage that may occur.
- Place a garbage bag in the cooler.
- Pack the samples appropriately inside the garbage bag (bottles placed upright) to prevent movement during shipment.
- Place sufficient amount of double-bagged ice around the samples to maintain the required temperature during shipment.
- Seal the garbage bag by tieing or taping.
- The maximum volume of preserved solution in the cooler must not exceed 500 ml.
- The maximum weight of the cooler shall not exceed 30 kg (66 lbs) for any limited-quantity shipment of dangerous goods.
- Secure the chain-of-custody form (placed inside a zip-type bag) to the interior of the cooler lid.
- If the shipment is from a DOE or other facility, place the results of the radiation screen and cooler/sample survey with the chain-of-custody.
- Wrap strapping tape or duct tape around both ends of the cooler and around the cooler lid.
- Affix custody seals to opposite sides of the cooler lid. Cover the custody seals with clear waterproof tape.
- Mark the outside of the cooler with the proper shipping name of the contents, corresponding UN number, and LTD. QTY. (as shown below).

Nitric Acid Solution (with less than 20 percent)
UN2031
Ltd. Qty.

- Place a label on the front of the cooler with the company name, contact name, phone number, full street address, and state with zip code for both shipper and recipient.
- Affix a Corrosive label to the outside of the cooler.
- Affix package orientation labels on two opposite sides of the cooler.
- Secure the marking and labels to the surface of the cooler with clear waterproof tape to prevent accidental removal during shipment.
- An example of cooler labeling/marking locations is shown in Figure 1.

Note: Samples meeting the exception concentration of 0.15 percent HNO_3 by weight will be shipped as nonregulated or nonhazardous following the procedure in Section 1.4.

Note: No marking or labeling can be obscured by strapping or duct tape.

Note: The inner packaging of dangerous goods must be placed into the designated cooler for shipment. Other nonregulated environmental samples may be added to the cooler for shipment.

- When shipping from a DOE facility, the cooler will be surveyed by a qualified radiation control technician to ensure that radiation flux on exterior surfaces does not exceed 0.5 mrem/h on all sides. This survey will be documented and the results reviewed by the qualified shipper.
- Complete the Dangerous Goods and Hazardous Materials Inspection Checklist for Shipping Limited-Quantity (Appendix A).
- Complete a Dangerous Goods Airbill.

6.0 Packaging and Shipping Samples Preserved with Sulfuric Acid

6.1 Containers

The inner packaging container (and amount of preservative) that may be used for these shipments includes:

Excepted Quantities of Sulfuric Acid Preservatives

Preservative		*Desired in Final Sample*		*Quantity of Preservative (ml) for Specified Container*				
		pH	**Conc.**	**40 ml**	**125 ml**	**250 ml**	**500 ml**	**1 L**
H_2SO_4	37N	<1.15	0.35%	.1	.25	0.5	1	2

5 drops = 1 ml

6.2 Responsibility

It is the responsibility of the qualified shipper to:

- Determine the samples undergoing shipment contain no other contaminant that meets the definition of hazardous material as defined by DOT
- Determine the amount of preservative in each sample so that accurate determination of quantities can be made

Note: Responsibilities may vary from site to site. Therefore, all field team member responsibilities shall be defined in the field plan or site-/project-specific quality assurance project plan (QAPP).

6.3 Additional Required Equipment

The following equipment is needed in addition to the required equipment listed in Section 1.3:

- Inner packings may consist of glass or plastic jars no larger than 100 ml.
- Outer packaging (for limited quantities) insulated cooler that has passed the ICAO drop test.
- Survey documentation (if shipping from DOE or radiological sites)
- Class 8 corrosive labels
- Orientation labels
- Consignor/consignee labels

6.4 Packaging of Samples Preserved with Sulfuric Acid

Samples containing H_2SO_4 as a preservative that exceed the excepted concentration of 0.35 percent will be shipped as a limited quantity per packing instruction Y809 of the IATA/ICAO Dangerous Goods Regulations.

The following steps are to be followed when packaging limited-quantity samples shipments:

- Tape any interior opening in the cooler (drain plug) from the inside to ensure control of interior contents. Also, tape the drain plug from the outside of the cooler.
- All sample containers will be properly labeled and the label protected with waterproof tape before sampling.
- At a minimum the label must contain:
  - Project name
  - Project number
  - Date and time of sample collection
  - Sample location
  - Sample identification number
  - Collector's initials
  - Preservative (note amount of preservative used in miscellaneous section of the chain-of-custody form)
- Wrap each glass container in bubble wrap (secure with waterproof tape) to prevent breakage.
- Place the bubble-wrapped container into a 2.7-mil zip-type bag, removing trapped air.
- Place glass containers inside a polyethylene bottle filled with vermiculite; seal the bottle.
- Place sufficient amount of vermiculite in the bottom of the cooler to absorb any leakage that may occur.
- Place a garbage bag in the cooler.
- Pack the samples appropriately inside the garbage bag (bottles placed upright) to prevent movement during shipment.
- Place sufficient amount of double-bagged ice around the samples to maintain the required temperature during shipment.
- Seal the garbage bag by tieing or taping.
- The maximum volume of preserved solution in the cooler must not exceed 500 ml.
- The maximum weight of the cooler shall not exceed 30 kg (66 lbs) for any limited-quantity shipment of dangerous goods.
- Secure the chain-of-custody form (placed inside a zip-type bag) to the interior of the cooler lid.
- If the shipment is from a DOE or other facility, place the results of the radiation screen and cooler/sample survey with the chain-of-custody.
- Wrap strapping tape or duct tape around both ends of the cooler and around the cooler lid.
- Affix custody seals to opposite sides of the cooler lid. Cover the custody seals with clear waterproof tape.
- Mark the outside of the cooler with the proper shipping name of the contents, corresponding UN number, and LTD. QTY. (as shown below).

  Sulfuric Acid Solution
  UN2796
  LTD. QTY.

- Place a label on the front of the cooler with the company name, contact name, phone number, full street address, and state with zip code for both shipper and recipient.
- Affix a Corrosive label to the outside of the cooler.
- Affix package orientation labels on two opposite sides of the cooler.
- Secure the marking and labels to the surface of the cooler with clear waterproof tape to prevent accidental removal during shipment.
- An example of cooler labeling/marking locations is shown in Figure 1.

Note: Samples containing less than the exception concentration of 0.35 percent H_2SO_4 by weight will be shipped as nonregulated or nonhazardous in accordance with the procedure described in Section 1.4.

Note: No marking or labeling can be obscured by strapping or duct tape.

Note: The inner packaging of dangerous goods must be placed into the designated cooler for shipment. Other nonregulated environmental samples may be added to the cooler for shipment.

- When shipping from a DOE facility, the cooler will be surveyed by a qualified radiation control technician to ensure that radiation flux on exterior surfaces does not exceed 0.5 mrem/h on all sides. This survey will be documented and the results reviewed by the qualified shipper.
- Complete the Dangerous Goods and Hazardous Materials Inspection Checklist for Shipping Limited-Quantity (Appendix A).
- Complete a Dangerous Goods Airbill.

7.0 Packaging and Shipping Limited-Quantity Radioactive Samples

7.1 Containers

The inner packaging containers that may be used for these shipments include:

- Any size sample container

7.2 Description/Responsibilities

- The qualified shipper will determine that the samples undergoing shipment contain no other contaminant that meets the definition of hazardous material as defined by DOT.
- The qualified shipper will ship all samples that meet the Class 7 definition of radioactive materials and meet the activity requirements specified in Table 7 of 49 CFR 173.425, as Radioactive Materials in Limited Quantity. The qualified shipper will verify that all packages and their contents meet the requirements of 49 CFR 173.421, *Limited Quantities of Radioactive Materials*.
- The packaging used for shipping will meet the general requirements for packaging and packages specified in 49 CFR 173.24 and the general design requirements provided in 173.410. These standards state that a package must be capable of withstanding the effects of any acceleration, vibration, or vibration resonance that may arise under normal condition of transport without any deterioration in the effectiveness of the closing devices on the various receptacles or in the integrity of the package as a whole and without loosening or unintentionally releasing the nuts, bolts, or other securing devices even after repeated use.
- If the shipment is from a DOE facility, radiological screenings will be completed on all samples taken. The qualified shipper will review the results of each screening (alpha, beta, and gamma speciation). Samples will not be shipped offsite until the radiological screening has been performed.
- The total activity for each package will not exceed the relevant limits listed in Table 7 of 49 CFR 173.425. The A_2 value of the material will be calculated based on all radionuclides found during previous investigations (if any) in the area from which the samples are derived. The A_2 values to be used will be the most restrictive of all potential radionuclides as listed in 49 CFR 173.435.
- The radiation level at any point on the external surface of the package bearing the sample(s) will not exceed 0.005 mSv/hour (0.5 mrem/hour). These will be verified by dose and activity monitoring before shipment of the package.
- The removable radioactive surface contamination on the external surface of the package will not exceed the limits specified in 49 CFR 173.443(a). CDM will apply the DOE-established free release criteria for removable surface contamination of less than 20 dpm/100 cm^2 (alpha) and 1,000 dpm/100 cm^2 (beta/gamma). It shall be noted that these values are more conservative than the DOT requirements for removable surface contamination.
- The qualified shipper will verify that the outside of the inner packaging is marked “Radioactive.”
- The qualified shipper will verify that the excepted packages prepared for shipment under the provisions of 49 CFR 173.421 have a notice enclosed, or shown on the outside of the package, that reads, **“This package conforms to the conditions and limitations specified in 49 CFR 173.421 for radioactive material, excepted package-limited quantity of material, UN2910.”**

Note: Responsibilities may vary from site to site. Therefore, all field team member responsibilities shall be defined in the field plan or site-/project-specific quality assurance project plan (QAPP).

7.3 Additional Required Equipment

The following equipment is needed in addition to the required equipment listed in Section 1.3:

- Survey documentation/radiation screening results (if shipping from DOE or radiological sites)
- Orientation labels
- Excepted quantities label
- Consignor/consignee labels

7.4 Packaging of Limited-Quantity Radioactive Samples

The following steps are to be followed when packaging limited-quantity sample shipments:

- The cooler is to be surveyed by a qualified radiation control technician to ensure that radiation flux on exterior surfaces does not exceed 0.5 mrem/h on all sides. This survey will be documented and the results reviewed by the qualified shipper.
- Tape any interior opening in the cooler (drain plug) from the inside to ensure control of interior contents. Also, tape the drain plug from the outside of the cooler.
- All sample containers will be properly labeled and the label protected with waterproof tape before sampling.
- At a minimum the label must contain:
  - Project name
  - Project number
  - Date and time of sample collection
  - Sample location
  - Sample identification number
  - Collector's initials
- This step is optional; wrap each container in bubble wrap (secure with waterproof tape) to prevent breakage.
- Place sufficient amount of vermiculite, or approved packaging material, in the bottom of the cooler to absorb any leakage that may occur.
- Place a garbage bag in the cooler.
- Pack the samples appropriately inside the garbage bag (bottles placed upright) to prevent movement during shipment.
- If required, place a sufficient amount of double-bagged ice around the samples to maintain the required temperature during shipment.
- Seal the garbage bag by tieing or taping.
- Place a label marked Radioactive on the outside of the sealed bag.
- Enclose a notice that includes the name of the consignor or consignee and the following statement: ***"This package conforms to the conditions and limitations specified in 49 CFR 173.421 for radioactive material, excepted package-limited quantity of material, UN2910."***
- Note that both DOT and IATA apply different limits to the quantity in the inside packing and in the outside packing.
- The maximum weight of the package shall not exceed 30 kg (66 lbs) for any limited-quantity shipment of dangerous goods.
- Secure the chain-of-custody form (placed inside a zip-type bag) to the interior of the cooler lid.
- If the shipment is from a DOE or other facility, place the results of the radiation screen and cooler/sample survey with the chain-of-custody.
- If a cooler is used, wrap strapping tape or duct tape around both ends of the cooler and around the cooler lid.
- Affix custody seals to opposite sides of the cooler lid. Cover the custody seals with clear waterproof tape.
- Place a label on the front of the cooler with the company name, contact name, phone number, full street address, and state with zip code for both shipper and recipient.
- Affix package orientation labels on two opposite sides of the cooler/package.
- Affix a completed Excepted Quantities label to the side of the cooler/package.
- Secure any marking and labels to the surface of the cooler with clear waterproof tape to prevent accidental removal during shipment.
- An example of the cooler labeling/marking is shown in Figure 2.

Note: No marking or labeling can be obscured by strapping or duct tape.

- Complete the Shipment Quality Assurance Checklist (Appendix B).

  Note: Except as provided in 49 CFR 173.426, the package will not contain more than 15 grams of ^{235}U.
  Note: A declaration of dangerous goods is not required.

Figure 2
Radioactive Material – Limited-Quantity Cooler Marking Example

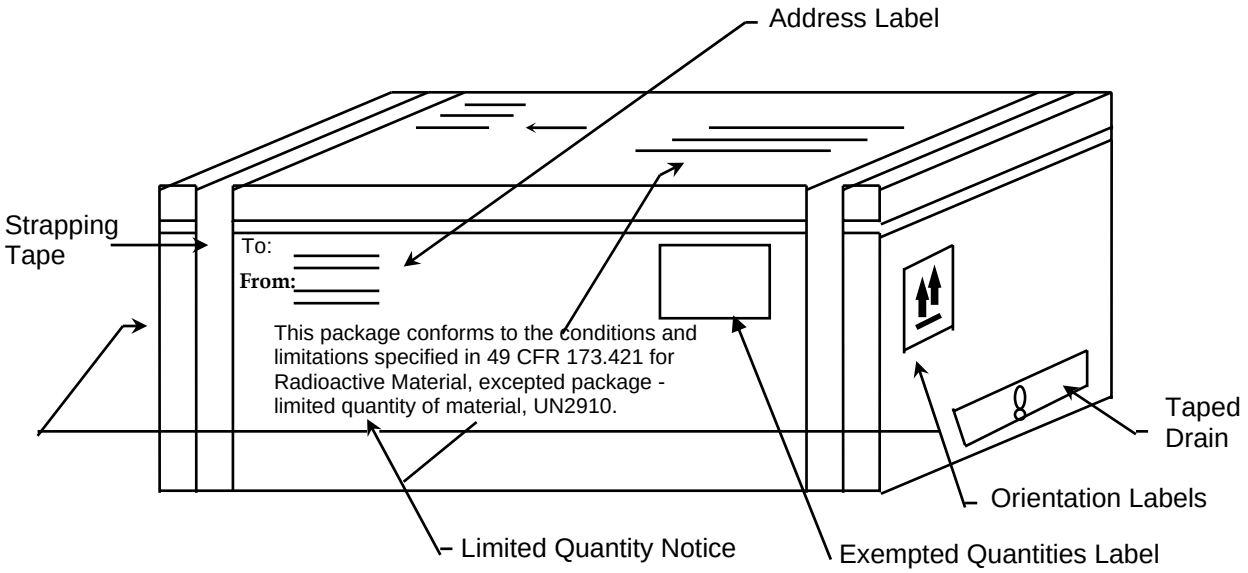

8.0 References

U. S. Environmental Protection Agency. Region IV. February 1991 or current. *Standard Operating Procedures and Quality Assurance Manual*.

_____. 1996 or current. *Sampler's Guide to the Contract Laboratory Program*, EPA/540/R-96/032.

Title 49 Code of Federal Regulations, Department of Transportation. 2005 or current revision. *Hazardous Materials Table, Special Provisions, Hazardous, Materials Communications, Emergency Response Information, and Training Requirements*, 49 CFR 172.

Title 49 Code of Federal Regulations, Department of Transportation. 2005 or current revision. *Shippers General Requirements for Shipments and Packagings*, 49 CFR 173.

Appendix A

Dangerous Goods and Hazardous Materials Inspection Checklist for Shipping Limited-Quantity

Sample Packaging

Yes	No	N/A	
❑	❑	❑	The VOA vials are wrapped in bubble wrap and placed inside a zip-type bag.
❑	❑	❑	The VOA vials are placed into a polyethylene bottle, filled with vermiculite, and tightly sealed.
❑	❑	❑	The drain plug is taped inside and outside to ensure control of interior contents.
❑	❑	❑	The samples have been placed inside garbage bags with sufficient bags of ice to preserve samples at 4°C.
❑	❑	❑	The cooler weighs less than the 66-pound limit for limited-quantity shipment.
❑	❑	❑	The garbage bag has been sealed with tape (or tied) to prevent movement during shipment.
❑	❑	❑	The chain-of-custody has been secured to the interior of the cooler lid.
❑	❑	❑	The cooler lid and sides have been taped to ensure a seal.
❑	❑	❑	The custody seals have been placed on both the front and back hinges of the cooler, using waterproof tape.

Air Waybill Completion

Yes	No	N/A	
❑	❑	❑	Section 1 has the shipper's name, company, and address; the account number, date, internal billing reference number; and the telephone number where the shipper can be reached.
❑	❑	❑	Section 2 has the recipient's name and company along with a telephone number where they can be reached.
❑	❑	❑	Section 3 has the **Bill Sender** box checked.
❑	❑	❑	Section 4 has the **Standard Overnight** box checked.
❑	❑	❑	Section 5 has the **Deliver Weekday** box checked.
❑	❑	❑	Section 6 has the number of packages and their weights filled out. Was the total of all packages and their weights figured up and added at the bottom of Section 6?
❑	❑	❑	Under the **Transport Details** box, the **Cargo Aircraft Only** box is obliterated, leaving only the **Passenger and Cargo Aircraft** box.
❑	❑	❑	Under the **Shipment Type**, the **Radioactive** box is obliterated, leaving only the **Non-Radioactive** box.
❑	❑	❑	Under the **Nature and Quantity of Dangerous Goods** box, the **Proper Shipping Name, Class or Division, UN or ID No., Packing Group, Subsidiary Risk, Quantity and Type of Packing, Packing Instructions, and Authorization** have been filled out for the type of chemical being sent.
❑	❑	❑	The **Name, Place and Date, Signature, and Emergency Telephone Number** appears at the bottom of the FedEx Airbill.
❑	❑	❑	The statement "In accordance with IATA/ICAO" appears in the **Additional Handling Information** box.
❑	❑	❑	The E**mergency Contact Information** at the bottom of the FedEx Airbill is truly someone who can respond any time of the day or night.

Proper Shipping Name	*Class or Division*	*UN or ID No.*	*Packing Group*	*Sub Risk*	*Quantity*	*Packing Instruction*	*Authorization*
Hydrochloric Acid Solution	8	UN1789	II		1 plastic box × 0.5 L	Y809	Ltd. Qty.
Nitric Acid Solution (with less than 20%)	8	UN2031	II		1 plastic box × 0.5 L	Y807	Ltd. Qty.
Sodium Hydroxide Solution	8	UN1824	II		1 plastic box × 0.5 L	Y809	Ltd. Qty.
Sulfuric Acid Solution	8	UN2796	II		1 plastic box × 0.5 L	Y809	Ltd. Qty.
Methanol	3	UN1230	II		1 plastic box × 1 L	Y305	Ltd. Qty.

Sample Cooler Labeling

Yes	No	N/A	
❑	❑	❑	The proper shipping name, UN number, and Ltd. Qty. appears on the shipping container.
❑	❑	❑	The corresponding hazard labels are affixed on the shipping container; the labels are not obscured by tape.
❑	❑	❑	The name and address of the shipper and receiver appear on the top and side of the shipping container.
❑	❑	❑	The air waybill is attached to the top of the shipping container.
❑	❑	❑	**Up Arrows** have been attached to opposite sides of the shipping container.
❑	❑	❑	Packaging tape does not obscure markings or labeling.

Appendix B
Shipment Quality Assurance Checklist

Date: _____ Shipper: _____ Destination: _____

Item(s) Description: _____

Radionuclide(s): _____

Radiological Survey Results: surface _____mrem/hr 1 meter _____

Instrument Used: Mfgr: _____ Model: _____

S/N: _____ Cal Date: _____

Limited-Quantity or Instrument and Article

Yes	No		
___	___	1.	Strong tight package (package that will not leak material during conditions normally incidental to transportation).
___	___	2.	Radiation levels at any point on the external surface of package less than or equal to 0.5 mrem/hr.
___	___	3.	Removable surface contamination less than 20 dpm/100 cm^2 (alpha) and 1,000 dpm/100 cm^2 (beta/gamma).
___	___	4.	Outside inner package bears the marking “Radioactive.”
___	___	5.	Package contains less than 15 grams of ^{235}U (check yes if ^{235}U not present).
___	___	6.	Notice enclosed in or on the package that includes the consignor or consignee and the statement, **“This package conforms to the conditions and limitations specified in 49 CFR 173.421 for radioactive material, excepted package-limited quantity of material, UN2910.”**
___	___	7.	Activity less than that specified in 49 CFR 173.425. Permissible package limit: Package Quantity:
___	___	8.	On all air shipments, the statement **Radioactive Material, excepted package-limited quantity of material** shall be noted on the air waybill.

Qualified Shipper: _____ Signature: _____

Field Logbook Content and Control

SOP 4-1
Revision: 6
Date: March 2007

Prepared: Del Baird

Technical Review: Laura Splichal

E-Signed by Michael C. Malloy
VERIFY authenticity with ApproveIt

QA Review: Jo Nell Mullins

Approved:

Signature/Date

E-Signed by P. Michael Schwan
VERIFY authenticity with ApproveIt

Issued:

Signature/Date

1.0 Objective

The objective of this standard operating procedure (SOP) is to set CDM Federal (CDM) criteria for content entry and form of field logbooks. Field logbooks are an essential tool to document field activities for historical and legal purposes.

2.0 Background

2.1 Definitions

Biota - The flora and fauna of a region.

Magnetic Declination Corrections - Compass adjustments to correct for the angle between magnetic north and geographical meridians.

2.2 Discussion

Information recorded in field logbooks includes field team names; observations; data; calculations; date/time; weather; and description of the data collection activity, methods, instruments, and results. Additionally, the logbook may contain deviations from plans and descriptions of wastes, biota, geologic material, and site features including sketches, maps, or drawings as appropriate.

3.0 General Responsibilities

Field Team Leader (FTL) - The FTL is responsible for ensuring that the format and content of data entries are in accordance with this procedure.

Site Personnel - All CDM employees who make entries in field logbooks during onsite activities are required to read this procedure before engaging in this activity. The FTL will assign field logbooks to site personnel who will be responsible for their care and maintenance. Site personnel will return field logbooks to the records file at the end of the assignment.

Note: Responsibilities may vary from site to site. Therefore, all field team member responsibilities should be defined in the field plan or site-/project-specific quality assurance plan.

4.0 Required Equipment

- Site-specific plans
- Field logbook
- Indelible black or blue ink pen
- Ruler or similar scale

5.0 Procedures

5.1 Preparation

In addition to this SOP, site personnel responsible for maintaining logbooks must be familiar with all procedures applicable to the field activity being performed. These procedures should be consulted as necessary to obtain specific information about equipment and supplies, health and safety, sample collection, packaging, decontamination, and documentation. These procedures should be located at the field office or vehicle for easy reference.

Field logbooks shall be bound with lined, consecutively numbered pages. All pages must be numbered before initial use of the logbook. Before use in the field, each logbook will be marked with a specific document control number issued by

the document control administrator, if required by the contract quality implementation plan (QIP). Not all contracts require document control numbers. The following information shall be recorded on the cover of the logbook:

- Field logbook document control number (if applicable).
- Activity (if the logbook is to be activity-specific), site name, and location.
- Name of CDM contact and phone number(s) (typically the project manager).
- Start date of entries.
- End date of entries.
- In specific cases, special logbooks may be required (e.g., waterproof paper for stormwater monitoring).

The first few (approximately five) pages of the logbook will be reserved for a table of contents (TOC). Mark the first page with the heading and enter the following:

Table of Contents

Date/Description	Pages
(Start Date)/Reserved for TOC	1-5

The remaining pages of the table of contents will be designated as such with “TOC” written on the top center of each page. The table of contents should be completed as activities are completed and before placing the logbook in the records file.

5.2 Operation

Requirements that must be followed when using a logbook:

- Record work, observations, quantities of materials, calculations, drawings, and related information directly in the logbook. If data collection forms are specified by an activity-specific plan, this information does not need to be duplicated in the logbook. However, any forms used to record site information must be referenced in the logbook.
- Do not start a new page until the previous one is full or has been marked with a single diagonal line so that additional entries cannot be made. Use both sides of each page.
- Do not erase or blot out any entry at any time. Indicate any deletion by a single line through the material to be deleted. Initial and date each deletion. Take care to not obliterate what was written previously.
- Do not remove any pages from the book.

Specific requirements for field logbook entries include:

- Initial and date each page.
- Sign and date the final page of entries for each day.
- Initial and date all changes.
- Multiple authors must sign out the logbook by inserting the following:
  Above notes authored by:
  - (Sign name)
  - (Print name)
  - (Date)
- A new author must sign and print his/her name before additional entries are made.
- Draw a diagonal line through the remainder of the final page at the end of the day.
- Record the following information on a daily basis:
  - Date and time
  - Name of individual making entry
  - Names of field team and other persons onsite
  - Description of activity being conducted including station or location (i.e., well, boring, sampling location number) if appropriate
  - Weather conditions (i.e., temperature, cloud cover, precipitation, wind direction, and speed) and other pertinent data
  - Level of personal protection used
  - Serial numbers of instruments
  - Equipment calibration information
  - Serial/tracking numbers on documentation (e.g., carrier air bills)

Entries into the field logbook shall be preceded with the time (written in military units) of the observation. The time should be recorded frequently and at the point of events or measurements that are critical to the activity being logged. All measurements made and samples collected must be recorded unless they are documented by automatic methods (e.g., data logger) or on a separate form required by an operating procedure. In these cases, the logbook must reference the automatic data record or form.

At each station where a sample is collected or an observation or measurement made, a detailed description of the location of the station is required. Use a compass (include a reference to magnetic declination corrections), scale, or nearby survey markers, as appropriate. A sketch of station location may be warranted. All maps or sketches made in the logbook should have descriptions of the features shown and a direction indicator. It is preferred that maps and sketches be oriented so that north is toward the top of the page. Maps, sketches, figures, or data that will not fit on a logbook page should be referenced and attached to the logbook to prevent separation.

Other events and observations that should be recorded include:

- Changes in weather that impact field activities.
- Deviations from procedures outlined in any governing documents. Also record the reason for any noted deviation.
- Problems, downtime, or delays.
- Upgrade or downgrade of personal protection equipment.
- Visitors to the site.

5.3 Post-Operation

To guard against loss of data as a result of damage or disappearance of logbooks, completed pages shall be periodically photocopied (weekly, at a minimum) and forwarded to the field or project office. Other field records shall be photocopied and submitted regularly and as promptly as possible to the office. When possible, electronic media such as disks and tapes should be copied and forwarded to the project office.

At the conclusion of each activity or phase of site work, the individual responsible for the logbook will ensure that all entries have been appropriately signed and dated and that corrections were made properly (single lines drawn through incorrect information, then initialed and dated). The completed logbook shall be submitted to the records file.

6.0 Restrictions/Limitations

Field logbooks constitute the official record of onsite technical work, investigations, and data collection activities. Their use, control, and ownership are restricted to activities pertaining to specific field operations carried out by CDM personnel and their subcontractors. They are documents that may be used in court to indicate dates, personnel, procedures, and techniques employed during site activities. Entries made in these logbooks should be factual, clear, precise, and nonsubjective. Field logbooks, and entries within, are not to be used for personal use.

7.0 References

Sandia National Laboratories. 1991. *Procedure for Preparing Sampling and Analysis Plan, Site-Specific Sampling Plan, and Field Operating Procedures,* QA-02-03. Albuquerque Environmental Program, Department 3220, Albuquerque, New Mexico.

Sandia National Laboratories. 1992. *Field Operation Procedure for Field Logbook Content and Control*. Environmental Restoration Department, Division 7723, Albuquerque, New Mexico.

Photographic Documentation of Field Activities

SOP 4-2
Revision: 7
Date: March 2007

Prepared: David O. Johnson

Technical Review: Sharon Budney

E-Signed by Michael C. Malloy
VERIFY authenticity with ApproveIt

QA Review: Jo Nell Mullins

Approved:

Signature/Date

E-Signed by P. Michael Schwan
VERIFY authenticity with ApproveIt

Issued:

Signature/Date

1.0 Objective

The purpose of this standard operating procedure (SOP) is to provide standard guidelines and methods for photographic documentation, which include still and digital photography and videotape or DVD recordings of field activities and site features (geologic formations, core sections, lithologic samples, water samples, general site layout, etc.). This document shall provide guidelines designed for use by a professional or amateur photographer. This SOP is intended for circumstances when formal photographic documentation is required. Based on project requirements, it may not be applicable for all photographic activities.

2.0 Background

2.1 Definitions

Photographer - A photographer is the camera operator (professional or amateur) of still photography, including digital photography, or videotape or digital versatile discs (DVD) recording whose primary function with regard to this SOP is to produce documentary or data-oriented visual media.

Identifier Component - Identifier components are visual components used within a photograph such as visual slates, reference markers, and pointers.

Standard Reference Marker - A standard reference marker is a reference marker that is used to indicate a feature size in the photograph and is a standard length of measure, such as a ruler, meter stick, etc. In limited instances, if a ruled marker is not available or its use is not feasible, it can be a common object of known size placed within the visual field and used for scale.

Slates - Slates are blank white index cards or paper used to present information pertaining to the subject/procedure being photographed. Letters and numbers on the slate will be bold and written with black indelible marking pens.

Arrows and Pointers - Arrows and pointers are markers/pointers used to indicate and/or draw attention to a special feature within the photograph.

Contrasting Backgrounds - Contrasting backgrounds are backdrops used to lay soil samples, cores, or other objects on for clearer viewing and to delineate features.

Data Recording Camera Back - A data recording camera back is a camera attachment or built-in feature that will record, at the very least, frame numbers and dates directly on the film.

2.2 Associated Procedures

- CDM Federal SOP 4-1, *Field Logbook Content and Control*

2.3 Discussion

Photographs and videotape or DVD recordings made during field investigations are used as an aid in documenting and describing site features, sample collection activities, equipment used, and possible lithologic interpretation. This SOP is designed to illustrate the format and desired placement of identifier components, such as visual slates, standard

reference markers, and pointers. These items shall become an integral part of the "visual media" that, for the purpose of this document, shall encompass still photographs, digital photographs, videotape recordings (or video footage), and recordings on DVDs. The use of a photographic logbook and standardized entry procedures are also outlined. These procedures and guidelines will minimize potential ambiguities that may arise when viewing the visual media and ensure the representative nature of the photographic documentation.

3.0 General Responsibilities

Field Team Leader - The field team leader (FTL) is responsible for ensuring that the format and content of photographic documentation are in accordance with this procedure. The FTL is responsible for directing the photographer to specific situations, site features, or operations that the photographer will be responsible for documenting.

Photographer - The photographer shall seek direction from the FTL and regularly discuss the visual documentation requirements and schedule. The photographer is responsible for maintaining a logbook per Sections 5.1, 5.2.4, and 5.3.1 of this SOP. Responsibilities will be defined in the project sampling plan.

Note: Responsibilities may vary from site to site. Therefore, all field team member responsibilities shall be defined in the field plan or site/quality assurance project plan (QAPP).

4.0 Required Equipment

A general list of equipment that may be used:

- 35mm camera or disposable single use camera (35mm or panoramic use)
- Digital camera
- Extra batteries for 35mm camera
- Video camera and appropriate storage media (e.g., video tapes, DVDs)
- Logbook
- Indelible black or blue ink pen
- Standard reference markers
- Slates
- Arrows or pointers
- Contrasting backgrounds
- Medium speed, or multi purpose fine-grain, color, 35mm negative film or slide film (project dependent)
- Data recording camera back (if available)
- Storage medium for digital camera

5.0 Procedures

5.1 Documentation

A commercially available, bound logbook will be used to log and document photographic activities. Review CDM Federal SOP 4-1, *Field Logbook Content and Control* and prepare all supplies needed for logbook entries.

Note: A separate photographic logbook is not required. A portion of the field logbook may be designated as the photographic log and documentation section.

Field Health and Safety Considerations

There are no hazards that an individual will be exposed to specific to photographic documentation. However, site-specific hazards may arise depending on location or operation. Personal protective equipment used in this operation will be site-specific and dictated through requirements set by the site safety officer, site health and safety plan, and/or prescribed by the CDM Federal Corporate Health and Safety Program. The photographer should contact the site safety officer for health and safety orientation before commencing field activities. The site health and safety plan must be read before entry to the site, and all individuals must sign the appropriate acknowledgement that this has been done.

The photographer should be aware of any potential physical hazards while photographing the subject (e.g., traffic, low overhead hazard, edge of excavation).

5.2 Operation

5.2.1 General Photographic Activities in the Field

The following sections provide general guidelines that should be followed to visually document field activities and site features using still/digital cameras and video equipment. Listed below are general suggestions that the photographer should consider when performing activities under this SOP:

- The photographer should be prepared to make a variety of shots, from close-up to wide-angle. Many shots will be repetitive in nature or format, especially close-up site feature photographs. Consideration should therefore be given to designing a system or technique that will provide a reliable repetition of performance.
- All still film photographs should be made using a medium speed, or multi purpose fine-grain, color negative film in the 35mm format unless otherwise directed by the FTL.
- It is suggested that Kodak brand “Ektapress Gold Deluxe” film or equivalent be used as the standard film for the still photography requirements of the field activities. This film is stable at room temperature after exposure and will better survive the time lag between exposure and processing. It is suggested that film speed ASA 100 should be used for outdoor photographs in bright sunlight, ASA 200 film should be used in cloudy conditions, and ASA 400 film should be used indoors or for very low-light outdoor photographs.
- No preference of videotape or DVD brand along with digital storage medium is specified and is left to the discretion of the photographer.
- The lighting for sample and feature photography should be oriented toward a flat condition with little or no shadow. If the ambient lighting conditions are inadequate, the photographer should be prepared to augment the light (perhaps with reflectors or electronic flash) to maintain the desired visual effect.
- Digital cameras have multiple photographic quality settings. A camera that obtains a higher resolution (quality) has a higher number of pixels and will store a fewer number of photographs per digital storage medium.

5.2.2 General Guidelines for Still Photography

Slate Information

It is recommended that each new roll of film or digital storage medium shall contain on the first usable frame (for film) a slate with consecutively assigned control numbers (a consecutive, unique number that is assigned by the photographer as in sample numbers).

Caption Information

All still photographs will have a full caption permanently attached to the back or permanently attached to a photo log sheet. The caption should contain the following information (digital photographs should have a caption added after the photographs are downloaded):

- Film roll control number (if required) and photograph sequence number
- Date and time
- Photographer
- Description of activity/item shown (e.g., name of facility/site, specific project name, project number)
- Direction (if applicable)

When directed by the sampling plan, a standard reference marker should be used in all documentary visual media. While the standard reference marker will be predominantly used in close-up feature documentation, inclusion in all scenes should be considered.

Digital media should be downloaded at least once each day to a personal computer; the files should be in either “JPEG” or “TIFF” format. Files should be renamed at the time of download to correspond to the logbook. It is recommended the electronic files be copied to a compact disc for backup.

Close-Up and Feature Photography

When directed by the sampling plan, close-up photographs should include a standard reference marker of appropriate size as an indication of the feature size and contain a slate marked with the site name and any identifying label, such as a well number or core depth, that clearly communicates to the viewer the specific feature being photographed.

Feature samples, core pieces, and other lithologic media should be photographed as soon as possible after they have been removed from their in situ locations. This enables a more accurate record of their initial condition and color. When directed by the sampling plan, include a standard reference color strip (color chart such as Munsell Soil Color Chart or that available from Eastman Kodak Co.) within the scene. This is to be included for the benefit of the viewer of the photographic document and serves as a reference aid to the viewer for formal lithologic observations and interpretations.

Site Photography
Site photography, in general, will consist predominantly of medium- and wide-angle shots. A standard reference marker should be placed adjacent to the feature or, when this is not possible, within the same focal plane.

While it is encouraged that a standard reference marker and caption/slate be included in the scene, it is understood that situations will arise that preclude their inclusion within the scene. This will be especially true of wide-angle shots. In such a case, the film/tape control number shall be entered in the photographic logbook along with the frame number and all other information pertinent to the scene.

Panoramic
In situations where a wide-angle lens does not provide sufficient subject detail, a single-use disposable panoramic camera is recommended. If this type of camera is not available, a panoramic series of two or three photos would be appropriate. Panoramas can provide greater detail while covering a wide subject, such as an overall shot of a site.

To shoot a panoramic series using a standard 35mm or digital camera, the following procedures are recommended:

- Use a stable surface or tripod to support the camera
- Allow a 20- to 30-percent overlap while maintaining a uniform horizon
- Complete two to three photos per series

5.2.3 General Photographic Documentation Using Video Cameras
As a reminder, it is not within the scope of this document to set appropriate guidelines for presentation or “show” videotape or DVD recording. The following guidelines are set for documentary videotape or DVD recordings only and should be implemented at the discretion of the site personnel.

Documentary videotape or DVD recordings of field activities may include an audio slate for all scenes. At the beginning of each video session, an announcer will recite the following information: date, time (in military units), photographer, site ID number, and site location. This oral account may include any additional information clarifying the subject matter being recorded.

A standard reference marker may be used when taking close-up shots of site features with a video camera. The scene may also include a caption/slate. It should be placed adjacent and parallel to the feature being photographed.

It is recommended that a standard reference marker and caption/slate be included in all scenes. The caption information is vital to the value of the documentary visual media and should be included. If it is not included within the scene, it should be placed before the scene.

Original video recordings will not be edited. This will maintain the integrity of the information contained on the videotape or DVD. If editing is desired, a working copy of the original video recording can be made.

A label should be placed on the videotape or DVD with the appropriate identifying information (project name, project number, date, location, etc.).

5.2.4 Photographic Documentation
Photographic activities must be documented in a photographic logbook or in a section of the field logbook. The photographer will be responsible for making proper entries.

In addition to following the technical standards for logbook entry as referenced in CDM Federal SOP 4-1, the following information should be maintained in the appropriate logbook:

- Photographer name.
- If required, an entry shall be made for each new roll/tape/DVD control number assigned.
- Sequential tracking number for each photograph taken (for digital cameras, the camera-generated number may be used).
- Date and time (military time).
- Location.
- A description of the activity/item photographed.
- If needed, a description of the general setup, including approximate distance between the camera and the subject, may be recorded in the logbook.
- Record as much other information as possible to assist in the identification of the photographic document.

5.3 Post Operation

All film will be sent for development and printing to a photographic laboratory (to be determined by the photographer). The photographer will be responsible for arranging transport of the film from the field to the photographic laboratory. The photographer shall also be responsible for arranging delivery of the negatives and photographs, digital storage medium, or videotape or DVD to the project management representative to be placed in the project files.

5.3.1 Documentation

At the end of each day's photographic session, the photographer(s) will ensure that the appropriate logbook has been completely filled out and maintained as outlined in CDM Federal SOP 4-1.

5.3.2 Archive Procedures

- Photographs and the associated set of uncut negatives, digital media, and original unedited documentary video recordings will be submitted to the project files and handled according to contract records requirements. The project manager will ensure their proper distribution.
- Completed pages of the appropriate logbook will be copied weekly and submitted to the project files.

6.0 Restrictions/Limitations

This document is designed to provide a set of guidelines for the field amateur or professional photographer to ensure that an effective and standardized program of visual documentation is maintained.

It is not within the scope of this document to provide instruction in photographic procedures, nor is it within the scope of this document to set guidelines for presentation or "show" photography.

The procedures outlined herein are general by nature. The photographer is responsible for specific operational activity or procedure. Questions concerning specific procedures or requirements should be directed to the project manager or FTL.

Note: Some sites do not permit photographic documentation. Check with the site contact for any restrictions.

7.0 References

U. S. Army Corps of Engineers. 2001. *Requirements for the Preparation of Sampling and Analysis Plans*, EM 200-1-3. Appendix F. February.

U. S. Environmental Protection Agency. 1992. National Enforcement Investigations Center. *Multi-Media Investigation Manual*, EPA-330/9-89-003-R. p. 85. Revised March.

_____. Region IV. 2001. *Environmental Investigations Standard Operating Procedures and Quality Assurance Manual*. Athens, Georgia. November.

Appendix B
EPA Contract Laboratory Program
Guidance for Field Samplers

OSWER 9240.0-44
EPA 540-R-07-06

FINAL July 2007

Office of Superfund Remediation and Technology Innovation

Contract Laboratory Program Guidance for Field Samplers

Disclaimer: The final version of the document replaces any prior versions of the document in their entirety.

Foreword

The intent of the Contract Laboratory Program (CLP) Guidance for Field Samplers is to replace the CLP Samplers Guide. This guidance document is designed to provide users with general information regarding environmental sample collection for the United States Environmental Protection Agency's (USEPA) Contract Laboratory Program (CLP). This document provides minimum CLP requirements, an explanation of the general sampling process sequence of events, and any related information. The appendices contain useful reference information and checklists to aid in planning and documenting sampling activities.

CLP users also are encouraged to review the Introduction to the Contract Laboratory Program document that contains a general overview of the CLP, how it works, and how to access the program. The CLP requires samplers to use the functionality provided by the Field Operations Records Management System (FORMS) II Lite™ software, which is the preferred means of creating CLP sample documentation. For guidance in using the software to record and submit sampling data, users should reference the FORMS II Lite User's Guide.

Both the Introduction to the Contract Laboratory Program and the Contract Laboratory Program Guidance for Field Samplers can be downloaded from the CLP Web site at the following address:

http://www.epa.gov/superfund/programs/clp/guidance.htm

The FORMS II Lite User's Guide can be downloaded from the CLP Web site at the following address:

http://dyncsdao1.fedcsc.com/itg/forms2lite/doc.html

For more information regarding the CLP or this guide, please contact Elizabeth Holman via email at Holman.Elizabeth@epa.gov or via telephone at (703) 603-8761.

Key Information

Text in blue and underlined indicates an external link to information outside of this document.

The images below are located throughout the document to draw attention to important information and each are labeled accordingly:

Important

Note

Table of Contents

1.0 INTRODUCTION 1

1.1 About this Guide 1
1.2 Overview of the CLP 1
1.2.1 Key Players Within the CLP 1
1.3 Overview of the Sampling Process 3
1.3.1 Procedures Must be Consistent 3
1.3.2 Analytical Data Must be Accurate and Defensible 3
1.3.3 Sampling Procedures and Guidelines Must Meet Minimum Requirements 4
1.4 Overview of Sampling Documentation Requirements 4
1.4.1 CLP Documentation Requirements 4

2.0 PRE-FIELD ACTIVITIES 7

2.1 Prepare for a Sampling Event 7
2.2 Communicate During a Sampling Event 8
2.3 Review Project Plans Containing Regional Requirements 8
2.4 Plan to Meet Documentation Requirements 9
2.4.1 Request Scheduling of Analysis, SMO-assigned Case Numbers, CLP Sample Numbers, and Laboratory Contact Information 9
2.4.2 Prepare Sample Cooler Return Documentation 10
2.5 Obtain Municipal Permits, Licenses, and Clearances 11
2.5.1 Request Access to County, State, Tribal, Military, and/or Federal Property 11
2.5.2 Contact Private Property Owners 11
2.5.3 Contact Utility Companies 11
2.6 Identify and Obtain Sampling Materials 12
2.6.1 Procure Appropriate Equipment and Supplies 12
2.6.2 Procure Sample Containers 12
2.6.3 Procure Shipping Supplies 13
2.7 Comply with Transportation and Shipping Requirements 13
2.8 Provide Shipment Notification 14
2.9 Perform Readiness Review/Dry Run 14

3.0 IN-FIELD ACTIVITIES 15

3.1 Collect Samples 15
3.1.1 Determine Types of Samples to be Collected 15
3.1.2 Meet Volume, Preservation, and Holding Time Requirements 17
3.2 Complete Documentation 22
3.2.1 Identify a Sample with a CLP Sample Number and SMO-assigned Case Number 22
3.2.2 Complete TR/COC Records 22
3.2.3 Complete and Attach Custody Seals 28
3.2.4 Complete and Attach Sample Labels 28
3.2.5 Complete and Attach Sample Tags 29
3.3 Provide Sample Receipt 30
3.4 Pack and Ship Samples 31
3.4.1 Sample Containers 31
3.4.2 Inventory of Samples and Documentation 31
3.4.3 Shipping Regulations 31
3.4.4 Sample Packaging for Shipment 31
3.4.5 Shipment Notification 34

Appendix A: Functions within a Sampling Project 1

Appendix B: CLP Sample Collection Guidelines for VOAs in Soil by SW-846 Method 5035A 1

Appendix C: General CLP Sample Collection Guidelines VOAs in Water 1

Appendix D: Sampling Techniques and Considerations 1

Table of Contents (Cont.)

Appendix E: Sampling Checklists 1
Appendix E-1: Personnel Preparation Checklist 1
Appendix E-2: General Sample Collection Checklist 2
Appendix E-3: Completing Field Logbook Checklist 3
Appendix E-4: Completing Handwritten Sample Labels Checklist 4
Appendix E-5: Completing Handwritten Sample Tags & Custody Seals Checklists 5
Appendix E-6: Packing Sample Container Checklist 6
Appendix E-7: Packing Shipping Container Checklist 7
Appendix E-8: Shipping & Reporting CLP Samples Checklist 8

Appendix F: Glossary 1

List of Figures

Figure 3-1. Packaged Sample with Identification and Chain-of-Custody Documentation (Excluding TR/COC Record) 22
Figure 3-2. Organic Traffic Report & Chain of Custody Record (Laboratory Copy) 24
Figure 3-3. Inorganic Traffic Report & Chain of Custody Record (Laboratory Copy) 25
Figure 3-4. Organic Traffic Report & Chain of Custody Record (Region Copy) 26
Figure 3-5. Inorganic Traffic Report & Chain of Custody Record (Region Copy) 27
Figure 3-6. Custody Seal 28
Figure 3-7. Completed Sample Tag 30
Figure 3-8. Sample Receipt Created Using the FORMS II Lite Software 30
Figure 3-9. Sample Cooler with Attached TR/COC Record and Cooler Return Documentation 33
Figure 3-10. Sample Weight Log 33
Figure 3-11. Shipping Cooler with Custody Seals 34

List of Tables

Table 1-1. Participants in the CLP Sampling Process 2
Table 2-1. CLP Sample Number Letter Codes 10
Table 2-2. Container Type Specifications 13
Table 3-1. QC Sample Types and CLP Submission Requirements 16
Table 3-2. Sample Collection Requirements for CLP SOW SOM01 (VOAs) 19
Table 3-3. Sample Collection Requirements for CLP SOW SOM01 (SVOAs, Pesticides and Aroclors) 20
Table 3-4. Sample Collection Requirements for CLP SOW ILM05 21
Table 3-5. Completing and Attaching a Custody Seal 28
Table 3-6. Completing and Attaching a Handwritten Sample Tag 29
Table 3-7. Packing Samples for Shipment 32
Table D-1. Mixing a Sample and Filling Sample Containers D-2

ASB	Analytical Services Branch
CERCLA	Comprehensive Environmental Response, Compensation, and Liability Act
CLP	Contract Laboratory Program
CLP PO	CLP Project Officer
CRQL	Contract Required Quantitation Limit
CVAA	Cold Vapor Atomic Absorption
DOT	Department of Transportation
DQO	Data Quality Objective
dbf	Database File
ET	Eastern Time
FORMS II Lite™	Field Operations Records Management System II Lite
FSP	Field Sampling Plan
HCN	Hydrocyanic acid
IATA	International Air Transport Association
ICP-AES	Inductively Coupled Plasma-Atomic Emission Spectroscopy
ICP-MS	Inductively Coupled Plasma-Mass Spectrometry
MS	Matrix Spike
MSD	Matrix Spike Duplicate
$NAHSO_4$	Sodium Bisulfate
NPL	National Priorities List
OSC	On-scene/on-site Coordinator
OSHA	Occupational Safety and Health Administration
OSRTI	Office of Superfund Remediation and Technology Innovation
OSWER	Office of Solid Waste and Emergency Response
PCBs	Polychlorinated Biphenyls
PE	Performance Evaluation
PM	Program Manager
ppb	Parts-Per-Billion
ppt	Parts-Per-Trillion
PRP	Potentially Responsible Party
PT	Proficiency Testing
PTFE	Polytetrafluoroethylene
PVC	Polyvinyl Chloride
QA	Quality Assurance
QAPP	Quality Assurance Project Plan
QASPER	Quality Assurance Sampling Plan for Environmental Response
QATS	Quality Assurance Technical Support
QC	Quality Control
RAS	Routine Analytical Services
RPM	Remedial Project Manager
RSCC	Regional Sample Control Center Coordinator
RSM	Regional Site Manager
SAM	Site Assessment Manager
SAP	Sampling Analysis Plan
SARA	Superfund Amendments and Reauthorization Act
SDG	Sample Delivery Group
SMC	System Monitoring Compound
SMO	Sample Management Office
SOP	Standard Operating Procedure
SOW	Statement of Work
SVOA	Semivolatile Organic Analyte
TR/COC	Traffic Report/Chain of Custody
txt	Text File
UN	United Nations
USEPA	United States Environmental Protection Agency
VOA	Volatile Organic Analyte
XML	eXtensible Markup Language

THIS PAGE INTENTIONALLY LEFT BLANK

1.0 INTRODUCTION

1.1 About this Guide

This document describes the important organizational roles and responsibilities for those who plan and conduct environmental sample collection projects for analysis through the Superfund's Contract Laboratory Program (CLP). This chapter introduces the structure and purpose of this document. Chapter 2, *Pre-field Activities*, addresses pre-field planning activities that the sampling team could complete prior to the actual sampling event. Chapter 3, *In-field Activities*, addresses those activities that need to be completed during the sampling event.

Appendix A describes the functions within a sampling project which are taken from the Quality Assurance Project Plan requirements. Appendix B and Appendix C contain the sample collection guidelines for Volatile Organic Analytes (VOAs) in soil and in water. Appendix D recommends sampling techniques. Appendix E contains checklists to help the sampler ensure that all necessary steps are completed.

Note

A project and site-specific Quality Assurance Project Plan (QAPP) providing Regional guidance will override guidance given within this document.

1.2 Overview of the CLP

The CLP is a national program of commercial laboratories under contract to support the USEPA's nationwide effort to clean up designated hazardous waste sites by supporting its Superfund program. The Superfund program was originally established under the Comprehensive Environmental Response, Compensation, and Liability Act (CERCLA) of 1980 and presently exists under the Superfund Amendments and Reauthorization Act (SARA) of 1986.

The CLP uses state-of-the-art technology to provide users with analytical services. The program provides data of known and documented quality to support USEPA enforcement activities or other user needs. To achieve this goal, the CLP has established strict Quality Control (QC) procedures and detailed documentation requirements. Current CLP users include the USEPA Regions, States and Tribal governments, and other Federal agencies. CLP users also are encouraged to review the *Introduction to the Contract Laboratory Program* document that contains a general overview of the CLP, how it works, and how to access the program.

1.2.1 Key Players Within the CLP

In coordinating Superfund sampling efforts, the Analytical Services Branch (ASB) is supported by the Sample Management Office (SMO) contractor, the Regional CLP Project Officers (CLP POs), the Regional Sample Control Center Coordinators (RSCCs), and the Regional Site Managers (RSMs), including Site Assessment Managers (SAMs), On-scene/On-site Coordinators (OSCs), and Remedial Project Managers (RPMs). Samplers may work directly with the RSCC and/or RSM (or equivalent), and/or an OSC from the Field Support Section during a sampling event. See Table 1-1 for a brief description of the functions performed by key participants (functions may vary by Region).

Table 1-1. Participants in the CLP Sampling Process

Participants	Responsibilities
Analytical Services Branch	USEPA ASB directs the CLP from within the Office of Superfund Remediation and Technology Innovation (OSRTI) in the Office of Solid Waste and Emergency Response (OSWER). ASB responsibilities include: • Development of the Statements of Work (SOWs) that define required analytical methods (including QC, detection/quantitation limits, and holding times) for the analytical services procured under the CLP; • Development and implementation of policies and budgets for Superfund analytical operations; • Development of information management policies and products for analytical data; • Management of SMO and Quality Assurance Technical Support (QATS) contracts; • National administration, evaluation, and management of the CLP; and • Direction of CLP Quality Assurance (QA) activities in coordination with overall OSWER QA activities. To obtain the most current ASB contact list, refer to the following Web site: http://www.epa.gov/superfund/programs/clp/contacts.htm#ASB
CLP Sample Management Office	The contractor-operated SMO provides necessary management, operations, and administrative support to the CLP. SMO receives Regional analytical requests, coordinates and schedules sample analyses, and tracks sample shipments. SMO also receives and checks data for completeness and compliance, processes laboratory invoices, and maintains a repository of sampling records and program data.
CLP Contract Laboratories	The contractor-operated laboratories within CLP provide necessary analytical services for the isolation, detection, and quantitation of the CLP's target compounds and analytes.
Regional CLP Project Officer	The CLP PO monitors the technical performance of the contract laboratories in each Region. The CLP PO works closely with ASB Program Managers (PMs) to identify and resolve laboratory technical issues, and leads laboratory on-site evaluations. To obtain the most current CLP PO contact list, refer to the following Web site: http://www.epa.gov/superfund/programs/clp/polist.htm
Regional Sample Control Center Coordinator	In most Regions, the RSCC coordinates sampling efforts and serves as the central point-of-contact for sampling questions and problems. The RSCC works with SMO to schedule sample shipments to laboratories. In addition, the RSCC's activities may include: informing SMO of sample shipment, cancellations, special instructions, and sampling issues. To obtain the most current RSCC contact list, refer to the following Web site: http://www.epa.gov/superfund/programs/clp/rscclist.htm
Regional Site Manager	The RSM Coordinates the development of acceptance or performance criteria and oversees project-specific contractors, state officials, or private parties conducting site sampling efforts. The RSM could be the SAM, the OSC, or the Remedial Project Manager (RPM).
Field Support Section	The Field Support Section consists of personnel such as the OSC, SAM, and RPM. In most Regions, the Field Support Section develops Standard Operating Procedures (SOPs) for field sampling and related procedures, and assists sampling teams in following those SOPs. The sampling team determines what type(s) of CLP services will be required for a particular sampling event. The Field Support Section reviews Sampling Analysis Plans (SAPs) prepared by sampling teams and oversees sampling teams in the field. The Field Support Section may also prepare their own SAPs, perform sampling activities in the field, and analyze and report the results of their sampling events to the RSM.

1.3 Overview of the Sampling Process

Once USEPA has determined that physical, chemical, and/or biological testing of a site is necessary, samples of material from the site area must be collected. The type of material that must be collected and the analytical method to be used depends upon the physical location of the site, detection level(s), site history (previous sampling), and known or unknown conditions and contaminants. The sampling process includes carefully planned and consistently applied procedures that produce accurate and legally defensible data. The sampling team should consider the procedures and plans presented in this guide as minimum sampling process guidelines to maintain sample integrity and identity. Samples should be collected according to the approved project and site-specific QAPP and SAP. This document does not define specific sampling procedures because specific sampling protocols depend on individual site conditions, Regional requirements, and acceptance and performance criteria. Since Regions may have their own specific requirements for individual sampling programs, they are responsible for generating Region-specific sampling SOPs.

At–a-Glance:
Overview of the Sampling Process

- ✓ Procedures must be consistent.
- ✓ Analytical data must be accurate and defensible.
- ✓ Procedures must meet minimum requirements.

1.3.1 Procedures Must be Consistent

The purpose of sampling is to collect representative portions from a suspected contaminated site. Sample collection is critical to determining the presence, type, concentration, and extent of environmental contamination by hazardous substances, thus it is a crucial part of every sampling and environmental testing effort. Sampling procedures must be consistently written and followed to mitigate risk of error and the expense of re-sampling.

Failure to follow proper sampling and shipping procedures could result in samples that are contaminated, broken, mislabeled, lost during shipping, or unusable because of a missed holding time. If procedures are inconsistently or improperly followed, any resultant analytical data may be inaccurate and may not be defensible in a court of law.

Note: If re-sampling is needed due to improper sampling, the sampling team may incur the cost.

1.3.2 Analytical Data Must be Accurate and Defensible

The data gathered during sampling activities helps to accurately characterize contaminated waste sites so that the impact on human health and the environment can be properly evaluated. Acquiring accurate and defensible data that will be accepted in a court of law is the CLP's primary objective; therefore, the sampler must collect samples according to strict sampling procedures, plans, and guidelines. USEPA and many other Federal agencies use data resulting from analytical testing of soil/sediment/aqueous samples to:

- Determine if a site is contaminated with organic and/or inorganic compounds;
- Identify pollution sources and Potentially Responsible Parties (PRPs);
- Validate remedial design methodologies;
- Assess response and remedial priorities;
- Assess risk to human health and the environment;
- Determine appropriate cleanup actions; and
- Determine cleanup achievements.

1.3.3 Sampling Procedures and Guidelines Must Meet Minimum Requirements

It is imperative that samplers be aware of the minimum CLP and Regional requirements that directly impact and define how a sampling event will take place. It is important to note that the procedures and guidelines set forth in this document are considered minimum CLP requirements. Samplers should reference the following sections within this document that specifically address important requirements that must be met for a successful sampling event:

- Section 1.4.1 CLP Documentation Requirements;
- Section 2.4.1 Request Scheduling of Analysis, SMO-assigned Case Numbers, CLP Sample Numbers, and Laboratory Contact Information;
- Section 2.7 Comply with Transportation and Shipping Requirements;
- Section 2.8 Provide Shipment Notification;
- Section 3.1 Collect Samples; and
- Section 3.2 Complete Documentation.

1.4 Overview of Sampling Documentation Requirements

The sampler must properly document samples collected for analysis in order to uniquely identify each sample and ensure adequate chain-of-custody procedures. When collecting samples, the sampler should always keep in mind that any samples collected may be used in future litigation. This is especially important when samples are from privately owned property. If sampling on privately owned property, samplers should also provide the property owner with a receipt for samples collected and removed from that owner's property. Samplers may also be required by a Region to use a sample label, sample tag, or field operations records documenting information such as daily activities, equipment and materials used, personnel involved, site security, etc. These types of documentation help ensure proper sample identification and provide additional chain-of-custody records.

The documentation required by a Region for a sampling event is outlined in project plans such as the QAPP, SAP, and Field Sampling Plan (FSP).

At–a-Glance:
Overview of the Sampling Document Requirements

- ✓ Must use FORMS II Lite to create sample documentation. Analytical data must be accurate and defensible.
- ✓ CLP documentation requirements:
  - CLP Sample Number
  - SMO-assigned Case Number
  - Traffic Report/Chain of Custody (TR/COC) Record
  - Sample Labels
  - Sample Tags
  - Custody Seals
  - Field Operation Records

Under no circumstances should the site name appear on any documentation that is sent to the laboratory (for the CLP).

1.4.1 CLP Documentation Requirements

Samplers must:

1) Record the CLP Sample Number on each sample bottle;
2) Complete the Traffic Report/Chain of Custody (TR/COC) Record using the FORMS II Lite software, making sure to indicate on the TR/COC Record if the samples require the use of a Modified Analysis;
3) Complete and attach sample labels;
4) Complete and attach sample tags to meet Regional requirements;
5) Complete and attach custody seals to meet Regional requirements; and
6) Complete field operations records, as necessary.

Please contact your RSCC (see Table 1-1) for information regarding CLP Sample Numbers, SMO-assigned Case Numbers, TR/COC Records, and chain-of-custody seals for sampling events.

For information regarding using FORMS II Lite to create and complete a TR/COC Record, refer to the following Web site:

http://www.epa.gov/superfund/programs/clp/f2lite.htm

1.4.1.1 CLP Sample Number

A CLP Sample Number is unique per sampling location and is used to identify and track samples throughout the sampling and analytical processes and is recorded on many types of sampling documentation (e.g., TR/COC Records, sample labels, and sample tags). CLP Sample Numbers are provided to samplers by their RSCC or SMO.

Samplers must contact their RSCC (or their designee) to obtain CLP Sample Numbers for their sampling event. Samplers must correctly assign the CLP Sample Numbers to the appropriate sample bottle or container. Please refer to Section 3.2.1 for more detailed information regarding the use of CLP Sample Numbers.

Note: If the sampler has any questions regarding the assignment of CLP Sample Numbers, they should contact their RSCC.

1.4.1.2 SMO-assigned Case Number

SMO-assigned Case Numbers are used to track groups of samples throughout the sampling and analytical processes and are recorded on many types of sampling documentation (e.g., TR/COC Records, sample labels, and sample tags). Samplers must correctly assign the SMO-assigned Case Number to the appropriate sample bottle or container. To obtain a SMO-assigned Case Number, samplers must contact their RSCC (or their designee).

1.4.1.3 Laboratory Assignment

Samplers are responsible for shipping samples to the appropriate SMO-assigned laboratory for analysis. Samplers must contact their RSCC (or their designee) to obtain their laboratory assignment or they may be provided by SMO.

1.4.1.4 TR/COC Record

The TR/COC Record is used as physical evidence of sample custody and functions as a permanent record of each sample collected.

Per CLP documentation requirements, each cooler must contain a TR/COC Record that lists all the samples contained therein.

In an effort to automate sample documentation in the field, ASB has developed a stand-alone, Windows-based software application that samplers can use to automatically create and generate sample documentation. The FORMS II Lite software allows users to enter information prior to and during sampling events. It allows users to multi-task and electronically create, edit, and print documentation associated with sampling activities. Users can customize data entry screens throughout the entire documentation process. Users can also customize the format and content of sample labels based on specific requirements.

The program simplifies and accelerates the tedious manual sample documentation process by reducing the generation of handwritten documents by almost 70%. The FORMS II Lite software enables samplers to:

- Increment CLP Sample Numbers or manually assign their own unique, project-specific non-CLP Sample Numbers;
- Input the SMO-assigned Case Number into the appropriate field;
- Create sample labels, sample tags, TR/COC Records, Sample Weight forms, and receipts for samples taken from a site;
- Track samples from the field to the laboratory;

- Electronically capture sample information into databases; and
- Export electronic data as a database File (.dbf), Text (.txt), or eXtensible Markup Language (.xml) file.

USEPA requires samplers to use the FORMS II Lite software for all CLP sampling efforts. For assistance with obtaining or using the FORMS II Lite software, please contact the FORMS II Lite Help Desk at 703-818-4200 from 9:00 AM - 5:00 PM Eastern Time (ET). For additional information regarding FORMS II Lite use and training, please refer to the following Web site:

http://www.epa.gov/superfund/programs/clp/f2lite.htm

1.4.1.5 Chain-of-Custody Seals

A chain-of-custody seal is any adhesive label or tape that can be used to seal a sample bottle, container, plastic bag, or shipping cooler such that if it is opened or tampered with, the seal will be broken. Custody seals must be placed on each sample bottle, container, or bag (as appropriate) and each shipping cooler or container. The custody seal is an excellent means of maintaining a record of chain-of-custody, as well as guarding against possible sample contamination or tampering during shipping.

1.4.1.6 Sample Labels

A sample label is a sticker attached to a sample bottle or container that contains a sample. Sample labels are affixed to each sample container as samples are collected in the field or affixed prior to going in the field. A sample label must contain, at a minimum, a CLP Sample Number so that they can be associated with, and listed on, the associated TR/COC Record. The sample label may also include the required analysis/fraction and preservative used (to eliminate confusion at the laboratory). Samplers should refer to their project plans for Region-specific sample label requirements.

1.4.1.7 Sample Tags

A sample tag identifies a sample bottle or container that contains a sample. The tag also provides specific analytical direction and proof that a sample existed. To support the use of sample data in potential enforcement actions, samples with other than in situ measurements (e.g., pH, temperature, conductivity) can be identified with a sample tag. A CLP Sample Number and SMO-assigned Case Number must be recorded on a sample tag to indicate that the sample container comprises the whole sample in the case where there is just one container of sample, or part of the indicated sample in the case of multiple containers of sample. Samplers should refer to their project plans for Region-specific sample tag requirements.

1.4.1.8 Field Operation Records

Samplers should maintain complete, accurate, and legible field operations records as they perform a sampling activity. The following records are included: Field Logbooks; Corrective Action Reports; Sampling Trip Reports; supplemental standardized forms; logs; and records such as maps or photographs that document each step of the work performed in the field. Samplers should refer to their project plans for Region-specific field operations record requirements. These records are very important tools because they are considered part of the official project file when legal issues arise.

1.4.1.9 Weight Logs

A sample weight log identifies the tared, sample and final weights per bottle for VOA samples. In order to support Method 5035 for VOAs, samplers should enter tared and final weights per bottle in the CLP Sample Weight Log.

2.0 PRE-FIELD ACTIVITIES

This chapter provides instructions for completing the suggested pre-field activities that samplers could complete prior to performing sampling activities. These important pre-field activities will save time and help the sampler to better prepare for the sampling event. Samplers should be aware of issues routinely arise during the sampling process so that samplers can avoid making the same mistakes or having the same problems that could adversely affect their sampling event. Samplers are also expected to review all pertinent project plans and meet both CLP and Regional requirements that directly impact the structure and purpose of a sampling event.

At-a-Glance:
Pre-field Activities

- ✓ Prepare for and communicate during a sampling event.
- ✓ Review project plans containing Regional requirements.
- ✓ Plan to meet documentation requirements.
- ✓ Obtain any necessary permits, licenses, and clearances.
- ✓ Identify and obtain sampling materials.
- ✓ Comply with transportation and shipping requirements.
- ✓ Provide shipment notification.
- ✓ Perform Readiness Review/Run-through.

The project plans provide information such as the types and numbers of samples to be collected, the analytical methods to be used based on the desired level of quantitation, and the necessary equipment and supplies. The plans also describe the sampling method which may require different specific sample volumes/masses, containers, preservation, shipping, and handling to maintain the integrity of the samples without degradation or contamination.

In addition to reviewing project plans, samplers should determine if the sampling site is privately or publicly owned and obtain the necessary permission to access the sampling site. If the site is privately owned, samplers should make sure to have receipts for available samples to provide to the owner for all samples collected and removed from their property. Samplers must also prepare to identify and obtain sampling materials, prepare to meet documentation requirements by obtaining and learning to use the required software, comply with transportation and shipping requirements, and perform a readiness review/dry run of the sampling process.

2.1 Prepare for a Sampling Event

Samplers must prepare to meet CLP and Regional requirements for a sampling event, appropriately use the CLP Sample Number and SMO-assigned Case Number, complete the TR/COC Record using the FORMS II Lite software, and complete and attach the custody seal(s). It is very important that the sampler include the correct CLP Sample Number on each sample. It is also imperative that the TR/COC Record be accurately completed and submitted with the sample(s). Finally, the sampler must accurately and legibly complete and attach a custody seal to each sample container, or plastic sample bag (as appropriate), and each shipping cooler or container.

However, meeting the sampling requirements requires more than just the proper application of a CLP Sample Number on each sample, completion of the TR/COC Record, and use of a custody seal. The actual collection of samples, packaging, and shipping of those samples are equally important to a successful sampling event.

For example, if a sampler collects an insufficient volume of a sample, the laboratory may not be able to perform the requested analysis. Insufficient sample volumes may also result in a laboratory being unable to perform laboratory quality control, such as Matrix Spike (MS), Matrix Spike Duplicate (MSD), and Duplicate sample analysis. Additionally, if the laboratory receives a sample that is either unpreserved or the sample pH is outside of the required range, the sample cannot be properly analyzed.

Unfortunately, improper shipping and labeling processes and procedures often result in:

- Samples being shipped to the wrong laboratory;
- Broken or empty samples being received at the laboratory; and
- Custody seals or sealant tape that is missing or broken on sample bottles, containers, plastic bags, or shipping coolers shipped to the laboratories.

The importance of completing the paperwork associated with a sampling event cannot be overemphasized. Samplers must make a conscientious effort to accurately complete the TR/COC Record since this is the main document used to derive vital information about a particular sample. The person completing a TR/COC Record

must be careful to avoid errors such as the appropriate sample(s) not being listed, or the wrong samples being listed. In an effort to eliminate such errors and the confusion that can be associated with handwritten TR/COC Records, samplers must use the FORMS II Lite software to complete the TR/COC Record and other associated sampling documentation.

It is extremely important that QC samples, including field sample duplicates, field samples for Matrix Spike and Matrix Spike Duplicate analyses, and Proficiency Testing (PT) samples, also known as Performance Evaluation (PE) samples, be designated and labeled per Regional guidance by samplers in the field. Mislabeling of QC samples can result in improper and/or inaccurate analysis of a sample at the laboratory.

2.2 Communicate During a Sampling Event

Communication is a key element in planning, administrating, and conducting a sampling event. It is extremely important that all parties involved in a sampling event be in contact throughout the sampling process. The procedures and recommendations outlined in this guide are based on more than 20 years of experience. It has been demonstrated that approximately 50% of all sampling efforts have been negatively affected by incorrect sampling procedures and poor communication among participants.

The key elements of communication for a sampling event include the relationship between the RSCC, SMO, the samplers in the field, and the laboratories who will be accepting the samples. For instance, the samplers must contact the RSCC to start the process for setting up a sampling event. The RSCC will in turn contact SMO who will schedule the sampling event, establish laboratory availability, and arrange for the laboratory to accept projected samples. SMO will then communicate the laboratory assignment to the Region and possibly the sampler.

The sampler should contact the RSCC (per Regional guidelines) and allow enough time for the RSCC to contact SMO at least a week prior to the sampling event.

SMO provides SMO-assigned Case and CLP Sample Numbers in time for the sampling event. SMO also schedules a laboratory and makes sure the laboratory will not have any capacity problems. Communication is also important because if there is a change in the sampling event due to a cancellation or an increase or decrease in the number of samples that will be sent to the laboratory, the sampler can contact the RSCC who can work with SMO to remedy potential capacity, availability, or overbooking problems.

2.3 Review Project Plans Containing Regional Requirements

In addition to meeting CLP requirements, the sample collection process must fulfill numerous Regional requirements. These requirements are determined by a variety of factors that affect how samples should be collected for an individual sampling event. These factors include:

- The type of samples being collected (organic/inorganic, water, soil/sediment, etc.);
- The method by which the samples will be analyzed;
- The acceptance or performance criteria (i.e., Data Quality Objectives [DQOs]); and
- The type of data needed.

The QAPP for each sampling project is written to meet requirements outlined in the documents *EPA Requirements for Quality Assurance Project Plans* (QA/R-5), *EPA Guidance on Quality Assurance Project Plans* (G-5), and Regional QAPP preparation documents. The QAPP is prepared in advance of field activities and is used by samplers to develop any subsequent plans such as the Sampling SAP or the FSP. Samplers should review the QAPP and any subsequent project plans for information outlining the basic components of a sampling activity. QAPP and project plans should be finalized and approved by appropriate Regional QA personnel, the OSC, SAM, or the RPM before providing them to the sampling team. This should be done prior to the start of field activities. Appendix A explains the functions within a sampling project (as these functions relate to a sampling event) and the elements of that function as described in a typical QAPP. Copies of all project plans and relevant SOPs should be maintained in the field for the duration of the sampling project.

2.4 Plan to Meet Documentation Requirements

At-a-Glance:
Plan to meet documentation requirements.

- ✓ Request SMO-assigned Case and CLP Sample Numbers.
- ✓ Prepare sample cooler return documentation.
- ✓ Prepare to use the FORMS II Lite software.

Sampling events require a variety of accurate and complete documentation. Samplers should review their project plans to determine the types of documentation that must be completed for a sampling project and to ensure that the appropriate documentation will be on-hand in the field. The CLP documentation requirements include the CLP Sample Number, the SMO-assigned Case Number, the TR/COC Record, sample labels, sample tags, custody seals, and field operations records (as necessary). Samplers need to request SMO-assigned Case and CLP Sample Numbers for each sampling event prior to starting field activities. Samplers also need to make sure that the correct TR/COC Records (Organic TR/COC Record for organic analysis or Inorganic TR/COC Record for inorganic analysis) are being used within the FORMS II Lite software. Finally, samplers should be prepared to complete the appropriate shipping cooler return documentation.

Since samplers are required to use the FORMS II Lite software to prepare and submit sampling project documentation and maintain sample chain-of-custody, software users must be familiar with all emergency back up procedures that should be followed in the event of a system failure. Samplers must have access to FORMS II Lite-generated TR/COC Records at sampling events. If problems are experienced while using the FORMS II Lite software, please contact the FORMS II Lite Help Desk at 703-818-4200 from 9:00 AM - 5:00 PM ET.

In the event of a system crash, samplers must have backup hardcopies of FORMS II Lite TR/COC Records. For information regarding emergency backup procedures, please refer to the following Web site:

http://www.epa.gov/superfund/programs/clp/trcoc.htm

2.4.1 Request Scheduling of Analysis, SMO-assigned Case Numbers, CLP Sample Numbers, and Laboratory Contact Information

SMO-assigned Case Numbers are assigned based on a request for CLP Routine Analytical Services (RAS), which is processed though the RSCC (or his/her designee). The sampler must request the RSCC to schedule CLP RAS analysis. The CLP does have the capacity to schedule sampling on an emergency basis, however the sampler must contact the RSCC (or his/her designee) to obtain details regarding how to handle such a situation. When scheduling a sampling event that will last for more than one week, it is recommended that the sampler contact the RSCC (or his/her designee) on a weekly basis to provide updates. This contact between the sampler, the RSCC (or his/her designee), and SMO is very important because it will ensure better availability of laboratory capacity.

In addition to SMO-assigned Case and CLP Sample Numbers, samplers should make sure to have accurate laboratory contact information, such as:

- Laboratory name;
- Laboratory address;
- Contact name; and
- Laboratory phone number.

This information is used for both TR/COC Records and chain-of-custody documentation and shipping paperwork such as address labels and airbills.

The SMO-assigned Case Number is used to track groups of samples throughout the sampling and analytical processes. Samplers must correctly indicate the assigned Case Number on the appropriate sample bottle or container.

Note: The RSCC (or his/her designee) provides the CLP Case Numbers and Sample Numbers for each sampling event to samplers. Once the CLP Sample Numbers have been provided to the sampler, the sampler can use FORMS II Lite to print them onto sample labels.

The following characters are not to be used in generating CLP Sample Numbers and should never appear on any paperwork submitted to the laboratory: I, O, U, and V.

A CLP *Sample Number* is defined **as** a number that is unique per sampling location and identifies each CLP sample (see Section 1.4.1.1). Since samples must be identified per analytical program (either organic or inorganic), there are two types of TR/COC Records and two letter codes to denote organic vs. inorganic analysis.

A CLP *sample* is defined as one discrete portion of material to be analyzed that is contained at one concentration level, from one station location for each individual or set of analytical fractions -- provided the fractions are all requested for the same CLP analytical service (i.e., organic or inorganic), and identified by a unique Sample Number.

When samples are collected from several station locations to form a composite sample, the composite sample should be assigned either a number from one of the station locations used during collection, or a unique number that represents the composite sample for tracking purposes. The numbering scheme used internally at a sampling event for identifying composite samples should also be documented appropriately (e.g., in the field logs).

Organic CLP Sample Numbers begin with the Regional letter code, followed by four letters and/or numbers. Inorganic CLP Sample Numbers begin with "M", followed by the Regional letter code and then four letters and/or numbers. See Table 2-1 for Region and letter codes for each sample type (i.e., organic or inorganic).

Table 2-1. CLP Sample Number Letter Codes

Region	Letter Code	
	Organic	Inorganic
1	A	MA
2	B	MB
3	C	MC
4	D	MD
5	E	ME
6	F	MF
7	G	MG
8	H	MH
9	Y	MY
10	J	MJ

According to CLP guidelines, each individual inorganic water sample may be analyzed for total metals or dissolved metals, but not both. Therefore, water samples collected for total metal and dissolved metal analyses from the same sampling location must be assigned separate (unique) CLP Sample Numbers. A sampler can use the same CLP Sample Number for an inorganic soil or water sample collected for total metals, mercury and cyanide analyses.

Organic soil and water samples may be collected for analysis under the SOM01 SOW to detect:

- Aroclors;
- Semivolatile Organic Analytes (SVOAs);
- Pesticides;
- Volatile Organic Analytes (VOAs); and/or
- Trace Volatile Analytes

Inorganic soil and water samples may be collected for analysis for cyanide, and for metals using Inductively Coupled Plasma-Atomic Emission Spectroscopy (ICP-AES) and Cold Vapor Atomic Absorption (CVAA), under the ILM05.X SOW.

Inorganic water only samples may be collected for analysis for cyanide, and for metals using Inductively Coupled Plasma-Mass Spectrometry (ICP-MS) and CVAA, under the ILM05 SOW.

2.4.2 Prepare Sample Cooler Return Documentation

CLP laboratories must routinely return sample shipping coolers to the appropriate sampling office within 14 calendar days following receipt of shipment from the sampler. For sample coolers to be returned, the

sampler must complete the appropriate cooler documentation and work with Regions and government agencies to provide a cost-effective mechanism for laboratories to return the empty coolers to the appropriate sampling office. The sampling cooler return documentation can be prepared in advance and provided to samplers before field activities begin. **The sampler (not the CLP laboratory) is responsible for paying for return of the cooler and should also include shipping airbills bearing the sampler's account number, as well as a return address to allow for cooler return.**

To maintain consistency among cooler transportation programs, samplers should:

- Minimize the use of multiple transportation carriers to avoid confusion;
- Use multiple-copy labels so the laboratory and the sampling team can each retain a copy for their records;
- Prepare labels in advance so that the laboratory can simply affix a completed shipping label on the cooler;
- Include third-party billing information (i.e., their shipping account number) on labels so the laboratory will not be billed by the transportation carrier;
- Confirm that the laboratory knows which transportation carrier to use; and
- Include the SMO-assigned Case Number on return information.

2.5 Obtain Municipal Permits, Licenses, and Clearances

Before starting a sampling event, samplers must make sure to obtain the proper municipal permits, accesses to the property, and any government clearances, if required. The sampler must also contact any appropriate utility companies to ascertain where any underground pipes, cables, etc., may be located.

At-a-Glance:
Obtain permits, licenses, and clearances.

- ✓ Request access to County, State, Tribal, military, and/or Federal property.
- ✓ Contact private property owner(s).
- ✓ Contact utility companies.

2.5.1 Request Access to County, State, Tribal, Military, and/or Federal Property

Proper access to perform sampling activities is important not only for legal reasons, but also to eliminate delays in work and possible refusal to allow sampling to take place. It is crucial that the appropriate permits, licenses, and clearances be secured to obtain access for sampling activities that will be performed on County, State, Tribal, military, and/or Federal property. The sampler must contact the appropriate government offices or personnel well in advance to determine what kinds of approval are required. Pre-approval may be required for specific types of sample collection such as drilling or excavation. For example, drilling on a military base requires pre-approval. Base security may require clearances for all members of the sampling team, including subcontractors. This process may take two or more days.

If arrangements are not made in advance, the team may not be allowed to enter the site until their clearances are processed and the team has been approved to drill. As a result, the sampling schedule is delayed, costing extra time and money.

2.5.2 Contact Private Property Owners

The sampler must obtain written permission from the private property owner(s) before sampling on their property, even if verbal permission has been granted. It is recommended that samplers obtain verbal permission prior to their arrival at the sampling location, but written permission can be obtained on the day of sampling. If a property owner refuses to grant access to their property, it may be necessary for sampling participants to contact the appropriate authorities for assistance.

2.5.3 Contact Utility Companies

The sampler should contact local utility companies (e.g., power, phone, gas, cable, sanitation, etc.) at least one week prior to the sampling event to have underground cables, lines, and pipes flagged and marked. This is required by law. A national one-call directory can be found at:

http://www.digsafely.com/contacts.htm.

This will eliminate potential safety hazards and service disruption. For example, soil sampling in a residential area may require digging below the soil's surface. It is very important to know where utility lines and pipes are located so that samplers do not hit live electrical wires or rupture gas lines. Samplers should follow Regional or other appropriate program procedures for the procurement of such services. The utility service(s) disruption dates should be confirmed at least two days prior to sampling activities.

Note: Pre-payment of survey fees to local utility companies may be required.

2.6 Identify and Obtain Sampling Materials

Samplers must make sure to be prepared for a sampling project with the appropriate sampling materials (equipment, supplies, sample containers, packing materials, and shipping materials). The equipment and supplies must be properly cleaned, calibrated, and tested as necessary to meet the needs of the sampling project.

At-a-Glance:
Identify and obtain sampling materials.

- ✓ Procure appropriate equipment and supplies.
- ✓ Procure sample containers.
- ✓ Procure shipping supplies.

2.6.1 Procure Appropriate Equipment and Supplies

Each sampling event requires the procurement of equipment and materials to collect, document, identify, pack, and ship samples. The proper field sampling equipment is vital to a successful sample collection. Regional or other samplers should obtain, and arrange in advance, all of the equipment and supplies required for each sampling event. Samplers should review the project plans to verify that the proper equipment is being used for sample collection.

At a minimum, the following materials are generally required during a sampling event:

- Sample storage containers;
- Packing material;
- Sample containers;
- Shipping containers;
- Access to the FORMS II Lite software for creating sample labels, stickers, tags, and TR/COC Records;
- Custody seals; and
- Sampling equipment such as bowls, augers, pumps, etc.

Sampling events may also require specific items such as:

- Cooler temperature blanks;
- Trip blanks for VOA analysis;
- Preservation supplies (e.g., ice or acid); and
- Specially prepared sample vials (e.g., for SW-846 Method 5035A).

2.6.2 Procure Sample Containers

The analytical protocol(s) to be used for sample analysis often requires the use of a particular type of sample container. The type of container also may depend on the sample matrix and analysis. It is recommended that samplers use borosilicate glass containers, which are inert to most materials, when sampling for pesticides and/or other organics. Conventional polyethylene is recommended when sampling for metals because of the lower cost and absorption rate of metal ions.

Using the wrong container may result in breakage, gathering of an insufficient volume needed to perform sample analysis, or the container material may interfere with the analysis. Therefore, samplers should identify and use the correct sample containers for each sampling event.

Containers procured for a sampling event are usually pre-cleaned and shipped ready-for-use from the manufacturer to the sampling site. Regardless of the type of container used, samplers must ensure that the containers have been analyzed or certified clean to levels below concern for the project. These containers must meet the USEPA container type specifications listed in Table 2-2.

Table 2-2. Container Type Specifications

Reference Number	Container Type	Specifications	
		Closure	Septum
1	40 mL amber glass vial, 24 mm neck finish.	Polypropylene or phenolic, open-top screw-cap, 15 cm opening, 24-400 size.	24 mm disc of 0.005 in. Polytetrafluoroethylene (PTFE) bonded to 0.120 in. silicone for total a thickness of 0.125 in.
2	1 L high density polyethylene, cylinder-round bottle, 28 mm neck finish.	Polyethylene cap, ribbed, 28-410 size; F217 polyethylene liner.	N/A
3	8 oz short, wide mouth, straight-sided, glass jar, 70 mm neck finish.	Polypropylene or phenolic cap, 70-400 size; 0.015 in. PTFE liner.	N/A
4	4 oz (120 mL) tall, wide mouth, straight-sided, glass jar, 48 mm neck finish.	Polypropylene or phenolic cap, 48-400 size; 0.015 in. PTFE liner.	N/A
5	1 L amber round glass bottle, 33 mm pour-out neck finish.	Polypropylene or phenolic cap, 33-430 size; 0.015 in. PTFE liner.	N/A
6	500 mL high density polyethylene, cylinder-round bottle, 28 mm neck finish.	Polypropylene cap, ribbed, 28-410 size; F217 polyethylene liner.	N/A
7	Coring tool used as a transport device (e.g., 5 g Sampler).	Has built-in closing mechanism.	N/A
8	250 mL high density polyethylene, cylinder-round bottle, 28 mm neck finish.		N/A

The information contained in this table is also cross-referenced in the sample collection parameters discussed in Chapter 3. The container Reference Numbers are used in Tables 3-2 and 3-3 under the Containers column. For example, samples collected for low-level soil VOA analysis using SW-846 Method 5035A may require the sampler to use pre-prepared, tared closed-system purge-and-trap vials with a preservative (refer to Appendix B).

Note: Have extra containers readily available for each sampling event in case of breakage, loss, or contamination.

2.6.3 Procure Shipping Supplies

Samples should be correctly packaged into the appropriate shipping containers to reduce the risk of breakage or leakage, and the shipping containers should be appropriately prepared for shipment. Before heading into the field, samplers should refer to the appropriate project plans to determine the types of samples that will be taken during the sampling project so that samplers will have the proper packaging materials at the site for all pertinent samples container types and sample matrices. Samplers should also make sure to obtain the appropriate shipping paperwork (e.g., shipping forms required by the delivery service).

2.7 Comply with Transportation and Shipping Requirements

Samplers are expected to review the applicable project plans to be aware of all State, Federal, Department of Transportation (DOT), and International Air Transport Association (IATA) regulations governing environmental and hazardous sample packaging. The person who ships the samples is responsible for being in compliance with applicable packaging, labeling, and shipping requirements.

Samplers should request and receive sample permits for outside the continental United States, prior to shipping.

Additional information can be obtained on Hazardous Materials Safety Program regulations from the DOT's Research and Special Programs Administration. Federal transportation regulations can be found in 49-CFR Parts 100-185, are available on the Internet at:

http://www.myregs.com/dotrspa/

2.8 Provide Shipment Notification

Some Regions may require that samplers notify their RSCC (or his/her designee) when samples are shipped. Some Regions allow samplers to contact SMO directly to provide shipment notification. It is recommended that samplers contact the RSCC of sample origin to verify if such notification is necessary. If samplers are shipping samples after 5:00 PM ET, samplers must notify the RSCC (or designee) or SMO by 8:00 AM ET on the following business day.

For Saturday delivery at the laboratory, samplers MUST contact the RSCC (or designee) or SMO so that SMO will receive the delivery information by 3:00 PM ET on the Friday prior to delivery.

2.9 Perform Readiness Review/Dry Run

A readiness review/dry run is a test run of the proposed sampling event. This is a recommended practice since it gives samplers a chance to check all plans, documentation software (i.e., FORMS II Lite), and equipment lists for accuracy and completeness prior to sampling activities. It also provides an opportunity to consult with sampling team members to make sure all the elements are in place and everyone understands their tasking before actually going out to the field. Sampling project managers should provide the test or dry run dates and schedules to samplers so that samplers can prepare accordingly.

3.0 IN-FIELD ACTIVITIES

This chapter addresses the in-field activities a sampler will focus on during a sampling event such as: determining the type of samples to be collected; collecting the samples; meeting volume, preservation, and holding time requirements; completing documentation; and packing and shipping samples.

When performing a sampling event, the sampler is expected to follow prescribed sampling techniques. The sampler should also be aware of any special sampling considerations, contamination issues, and sample compositing and mixing methods that could affect their sampling efforts. Please refer to Appendix D for more detailed information.

At-a-Glance:
In-field Activities

- ✓ Collecting samples
- ✓ Completing documentation
- ✓ Sampling considerations
- ✓ Procuring shipping supplies

Note: Appropriate Regional guidance and procedures should be consulted for detailed sample collection, preservation, handling and storing, equipment decontamination, and QA/QC procedures.

3.1 Collect Samples

CLP RAS are generally used to analyze samples from Superfund sites. The matrices can be water, soil, or sediment. In some instances, a mixed-matrix sample may be collected which contains either a supernate (for a sediment/soil sample) or a precipitate (for a water sample). In this event, samplers should consult their management plans and/or discuss the required procedures with the RSM or their designee.

A CLP sample consists of all sample aliquots (portions):

- for each individual or set of analytical fractions;
- from one station location;
- for one sample matrix;
- at one concentration level;
- for one laboratory; and
- for one analytical program;

provided that the fractions are all requested from the same CLP analytical service.

In general, it is recommended that two individual samples be collected by separating the aqueous layer from the solid/precipitate layer at the point of collection. They may be assigned two different sample IDs (e.g., Sample IDs ABC124 and ABC125 for Sample ID ABC123), along with a note in the field sample log or tracking system that the sample IDs are derived or related to the same sample ID, to ensure correct follow-up upon receipt of results from the laboratory. Alternatively, they may be assigned the same sample ID, along with a notation of each individual sub-sample or fraction (e.g., Sample IDs ABC123-1 and ABC123-2 or Sample ID ABC123 Fraction 1 and Sample ID ABC123 Fraction 2 for Sample ID ABC123).

3.1.1 Determine Types of Samples to be Collected

Samplers may be required to take several types of samples or sample aliquots during a sampling event. They should refer to their project plans to determine the types of samples or aliquots to be taken, the volumes needed of each sample or aliquot, and the preservation needed for each sample. For an explanation of the various sample types and the requirements for collecting and submitting each particular type, refer to Table 3-1.

Table 3-1. QC Sample Types and CLP Submission Requirements

Sample Type	Purpose	Collection[1]	CLP Sample Number
Field Duplicate	To check reproducibility of laboratory and field procedures. To indicate non-homogeneity.	Collect from areas that are known or suspected to be contaminated. Collect one sample per week or 10% (Regions may vary) of all field samples per matrix, whichever is greater.	Assign two separate (unique) CLP Sample Numbers (i.e., one number to the field sample and one to the duplicate). Submit blind to the laboratory.
Field Blanks	To check cross-contamination during sample collection, preservation, and shipment, as well as in the laboratory. Also to check sample containers and preservatives.	Collect for each group of samples of similar matrix per day of sampling. Organics - Use water (demonstrated to be free of the contaminants of concern). Inorganics - Use metal-free (deionized or distilled) water.	Assign separate CLP Sample Numbers to the field blanks.
Trip Blank (Volatile Organic Analysis Only)	To check contamination of VOA samples during handling, storage, and shipment from field to laboratory.	Prior to going into the field, prepare and seal one sample per shipment per matrix using water demonstrated to be free of the contaminants of concern (deionized water is appropriate). Place this sample in the cooler used to ship VOA samples.	Assign separate CLP Sample Numbers to the trip blanks.
Equipment Blank or Rinsate Blank	To check field decontamination procedures.	Collect when sampling equipment is decontaminated and reused in the field or when a sample collection vessel (bailer or beaker) will be used. Use blank water (water demonstrated to be organic-free, deionized or distilled for inorganics) to rinse water into the sample containers.	Assign separate CLP Sample Numbers to the equipment blanks.
Matrix Spike (MS) and Duplicate (MSD)[2] (Organic Analysis Only)	To check accuracy and precision of organic analyses in specific sample matrices.	Collect from areas that are known or suspected to be contaminated. For smaller sampling events (i.e., 20 samples or less), MS/MSD additional volume should be collected in the first round of sampling and included in the first shipment of samples to the laboratory. Collect double or triple volume[3] for aqueous samples and soil VOA samples designated for MS/MSD analyses. Additional sample volume is not required for soil samples requiring SVOA, Pesticide, and/or Aroclor analysis. See Appendix B for VOA collection volumes.	Assign the same CLP Sample Number to the field sample and the extra volume for MS/MSD. Identify the sample designated for MS/MSD on the TR/COC Record.
Matrix Spike (MS) and Duplicate (MSD) (Inorganic Analysis Only)	To check accuracy and precision of inorganic analyses in specific sample matrices.	Collect from areas that are known or suspected to be contaminated. For smaller sampling events (i.e., 20 samples or less), Matrix Spike and Duplicates should be collected in the first round of sampling and included in the first shipment of samples to the laboratory. Additional sample volume may be required for inorganic analysis.[4]	Assign the same CLP Sample Number to the field sample and extra volume (if collected). Identify the sample(s) designated for Matrix Spike and Duplicates on the TR/COC Record.
PE Samples	Specially-prepared QC samples used to evaluate a laboratory's analytical proficiency.	The PE samples contain analytes with concentrations unknown to the laboratory. Designated Regional or authorized personnel (depending on Regional policy) arrange for Case-specific CLP PE samples to be prepared and shipped by the QATS contractor. The PE samples can be shipped to the site, or shipped per Regional direction. QATS provides the appropriate preparation instructions and chain-of-custody materials.	Samplers have no direct interaction with the PE sampling process, but should be aware that such samples do exist within the CLP sampling process. Samplers must, however, order PE samples and ship them to the laboratory if required by the Region.

[1] Consult Regional or Project Manager Guidance for field QC sample frequencies; laboratory QC sample frequencies are generally fixed in the laboratory subcontracts or specified in analytical methods. Current frequency for MS/MSD (organic) and MS/duplicate (inorganic) for the CLP is one sample per twenty field sample of similar matrix.

[2] Samples sent under the Organic SOW (SOM01) do not require an MS or MSD for Trace VOA, VOA and BNA fractions, but the Region may opt to send them at their discretion.

[3] Example of double volume: An aqueous sample for SVOA analysis would require the field sampler to collect at least 2 L of field sample and at least 1 L each for the MS and MSD samples for a total volume of 4 L. If Pesticide or Aroclor MS/MSD analyses are required for the same sample, an additional 4 L must be collected. Double volume is the MINIMUM allowable volume for samples designated for MS/MSD analysis. Triple volume may be sent for MS/MSD samples to allow for sufficient volume for these analyses in the event sample volume is lost as a result of samples breaking, leaking, or laboratory accidents.

[4] Double volume may be sent for inorganic aqueous MS and MSD samples to allow for sufficient volume for these analyses in the event sample volume is lost as a result of samples breaking, leaking or laboratory accidents.

3.1.1.1 Collect Field QC Samples

Samplers can collect field QC samples and laboratory QC samples to verify that sample quality is maintained during a sampling project.

Field QC samples are designed to assess variability of the media being sampled and to detect contamination and sampling error in the field. The types of field QC samples that are generally collected include field duplicates and field blanks (such as equipment, trip, or rinse blanks). Generally, field duplicate samples should remain "blind" to the laboratory (i.e., they should have separate CLP Sample Numbers).

3.1.1.2 Collect Laboratory QC Samples

A laboratory QC sample is an additional analysis of a field sample, as required by the laboratory's contract. There are three types of laboratory QC samples:

- MS [for organic and inorganic samples];
- MSD [for organic samples only]; and
- Duplicates [for inorganic samples only].

Note: Samplers should obtain Regional guidance regarding the collection of MS and MSD samples (especially for organics analyses).

Samplers should select one sample per matrix per 20 samples as a "laboratory QC" sample. Designated organic laboratory QC samples should be noted on the Organic TR/COC Record. Designated inorganic laboratory QC samples should be noted on the Inorganic TR/COC Record. The laboratory QC sample must not be designated only in the "Field QC Qualifier" column on either the Organic or Inorganic TR/COC Records. Make sure that the laboratory QC sample is included in TR/COC Record samples to be used for the Laboratory QC field.

The sampler should select a field sample as the laboratory QC sample. If the sampler does not select a field sample as the laboratory QC sample, then it is possible that the laboratory could select the field blank (e.g., an equipment or rinsate blank) sample to meet contractual QC requirements. The use of field blanks for laboratory MS/MSD/Duplicate analysis reduces the usability of the data to assess data quality.

Note: In the event of multiple sample shipments during a sampling event, it is recommended that the sampler submit laboratory QC samples in the first sample shipment.

3.1.2 Meet Volume, Preservation, and Holding Time Requirements

Samplers should refer to their project plans to obtain the specific sample volumes to be collected, the preservation needed for those samples, and the technical holding times under which they must submit samples to the scheduled CLP laboratory. Sample collection parameters (to include sample volumes, preservatives, and technical holding times) for organic collection and analysis are listed in Tables 3-2 and 3-3. Sample collection parameters for inorganic analysis and collection are listed in Table 3-4.

3.1.2.1 Collect Sample Volume

Collecting sufficient sample volume is critical. There must be sufficient physical sample volume for the analysis of all required parameters and completion of all QC determinations. The type of analytical procedure(s) to be performed will often dictate the sample volume to collect. For example, each water sample collected for VOA analysis by CLP SOW SOM01 or ILM05 requires a minimum of three vials, each filled completely to a 40 mL capacity. See Appendix C for information regarding the collection of VOAs in water. It is extremely important that samplers refer to their specific project plans to identify and collect the correct sample volume during each sampling event.

When sampling for VOAs in soils, samplers must use SW-846 Method 5035A guidelines included in Appendix B.

3.1.2.2 Preserve Samples

Degradation of some contaminants may occur naturally (e.g., VOAs). The sampler must chemically preserve some water samples for certain analytes before shipping them to the laboratory. The sampler should preserve and immediately cool all samples to 4°C (±2°C) upon collection and samples should remain cooled until the time of analysis (do not freeze water samples). Preservation techniques vary among Regions so the sampler should obtain Region-specific instructions and review the appropriate project plans and SOPs. See Appendix C for information regarding the collection of VOAs in water.

3.1.2.3 Ship within Holding Times

Samplers should ship samples to scheduled CLP laboratories as soon as possible after collection. Daily shipment of samples to CLP laboratories is preferred whenever possible. If samples cannot be shipped on a daily basis, they must be properly preserved and maintained to meet CLP-specified temperatures, holding times, and custody requirements.

The technical holding times are the maximum time allowed between a sample collection and the completion of the sample extraction and/or analysis. In contrast, contractual holding times are the maximum lengths of time that the CLP laboratory can hold the sample prior to extraction and/or analysis. These contractual holding times are described in the appropriate CLP SOW. Contractual holding times are shorter than the technical holding times to allow for sample packing and shipping.

Note: If samplers are shipping samples after 5:00 PM ET, they must notify the RSCC (or designee) or SMO by 8:00 AM ET on the following business day. When making a Saturday delivery, samplers shall contact the RSCC (or designee) or SMO by 3:00 PM ET on the Friday prior to delivery.

Table 3-2. Sample Collection Requirements for CLP SOW SOM01 (VOAs)

Matrix	Container Type	Sample Type	Minimum Number of Containers Needed				Minimum Volume/ Mass	Important Notes	Preservative	Technical Holding Time
			with Water	Dry	% Moisture	TOTAL				
Water	See Table 2-2, Reference Number 1.	Samples Only	-	-	-	**3**	Fill to capacity	Containers/vials must be filled to capacity with no headspace or air bubbles. Refer to Appendix C for samples requiring QC analyses.	Preserve to a pH of 2 with HCl and cool to 4°C (±2ºC) immediately after collection. DO NOT FREEZE water samples.	14 days
		Samples with SIM	-	-	-	**4**				
		Samples with MS/MSD	-	-	-	**6**				
		Samples with SIM and MS/MSD	-	-	-	**8**				
Soil/ Sediment	**OPTION 1** Closed-system Vials See Table 2-2, Reference Number 1.	Samples Only	-	3	1	**4**	5g	Place samples on side prior to being frozen. Refer to Appendix B for samples requiring QC analyses.	Frozen (-7°C to -15°C) or iced to 4° (±2°C).	14 days
		Samples with MS/MSD	-	9	1	**10**				48 hours
	OPTION 2 Closed-system containing Water Vials See Table 2-2, Reference Number 1.	Samples Only	2	1	1	**4**	5g	Containers/vials must be filled to capacity with no headspace or air bubbles. Place samples on side prior to being frozen. Refer to Appendix B for samples requiring QC analyses.	Frozen (-7°C to -15°C) or iced to 4° (±2°C). DO NOT FREEZE water samples.	14 days
		Samples with MS/MSD	6	1	5	**12**				48 hours
	OPTION 3 See Table 2-2, Reference Number 7.	Samples Only	-	3	1	**4**	5g	Refer to Appendix B for samples requiring QC analysis.	Frozen (-7°C to -15°C) or iced to 4°C (±2°C).	48 hours
		Samples with MS/MSD	-	9	1	**10**				48 hours

Notes

[1] Minimum volume/mass to be collected in order to ensure sample analysis can be performed.

[2] Check Regional guidance regarding use of acid as a preservative of samples that may contain carbonates, residual chlorine, and other oxidants.

[3] This technical holding time is calculated from the time of sample collection to sample extraction. Sample extracts are to be analyzed within 40 days of extraction. It is recommended that samplers ship samples to the laboratory on the same day that they are collected, or as soon as possible thereafter.

[4] Check Regional guidance regarding use of acid preservatives when testing for carbonates, residual chlorine, and other oxidants.

Table 3-3. Sample Collection Requirements for CLP SOW SOM01 (SVOAs, Pesticides and Aroclors)

Analysis	Matrix	Containers	Minimum Volume/ Mass	Important Notes	Preservative	Technical Holding Time
Semivolatile Analytes	Water	See Table 2-2, Reference Number 5.	2L	If amber containers are not available, the samples should be protected from light.	Cool all samples to 4°C (±2°C) immediately after collection. DO NOT FREEZE water samples.	7 days
	Soil/ Sediment	See Table 2-2, Reference Numbers 3 and 4.	Fill to capacity		Cool all samples to 4°C (±2°C) immediately after collection.	14 days
Pesticides/ Aroclors	Water	See Table 2-2, Reference Number 5.	2L	If amber containers are not available, the samples should be protected from light.	Cool all samples to 4°C (±2°C) immediately after collection. DO NOT FREEZE water samples.	7 days
	Soil/ Sediment	See Table 2-2, Reference Numbers 3 and 4.	Fill to capacity		Cool all samples to 4°C (±2°C) immediately after collection.	14 days

Notes

[1] Minimum volume/mass to be collected in order to ensure sample analysis can be performed.
[2] Check Regional guidance regarding use of acid as a preservative of samples that may contain carbonates, residual chlorine, and other oxidants.
[3] This technical holding time is calculated from the time of sample collection to sample extraction. Sample extracts are to be analyzed within 40 days of extraction. It is recommended that samplers ship samples to the laboratory on the same day that they are collected, or as soon as possible thereafter.
[4] Check Regional guidance regarding use of acid preservatives when testing for carbonates, residual chlorine, and other oxidants.

Table 3-4. Sample Collection Requirements for CLP SOW ILM05

Analysis	Matrix	Containers	Minimum Volume/ Mass[1]	Important Notes	Preservative	Technical Holding Time[4]
Metals/ICP-AES and/or Mercury by CVAA	Water	See Table 2-2, Reference Number 2.	1L	If collecting for both ICP-AES AND ICP-MS methods, a separate 1L volume of sample must be collected for each method per sample location.	Acidify to pH < 2 with HNO_3 and cool to 4°C (±2°C) immediately after collection.[2] NOT FREEZE water samples. DO	6 months for all metals except Mercury (28 days)
	Soil/ Sediment	See Table 2-2, Reference Number 3.	Fill to capacity		Cool to 4°C (±2°C) immediately after collection.	6 months
Cyanide/ Spectrophotometric Determination[3]	Water	See Table 2-2, Reference Number 2.	1L		To neutralize residual chlorine, immediately upon collection, add 0.6 g ascorbic acid for each liter of sample collected. Add NaOH until pH >12 and cool to 4°C (±2°C) immediately after collection.[5] DO NOT FREEZE water samples.	14 days
	Soil/ Sediment	See Table 2-2, Reference Number 3.	Fill to capacity		Cool to 4°C (±2°C) immediately after collection.	14 days

Notes

1 Minimum volume/mass to be collected in order to ensure sample analysis can be performed.

2 Check Regional guidance regarding use of acid as a preservative of samples that may contain carbonates, residual chlorine, and other oxidants.

3 Samplers must test for sulfide and oxidizing agents (e.g., chlorine) in aqueous samples in the field upon collection. Please refer to the SAP and Appendix C for guidance. Sulfides adversely affect the analytical procedure. The following can be done to test for and neutralize sulfides. Place a drop of the sample on lead acetate test paper to detect the presence of sulfides. If sulfides are present, treat 25 mL more of the sample than that required for the cyanide determination with powdered cadmium carbonate or lead carbonate. Yellow cadmium sulfide or black lead sulfide precipitates if the sample contains sulfide. Repeat this operation until a drop of the treated sample solution does not darken the lead acetate test paper. Filter the solution through a dry filter paper into a dry beaker, and from the filtrate measure the sample to be used for analysis. Avoid a large excess of cadmium carbonate and a long contact time in order to minimize a loss by complication or occlusion of cyanide on the precipitated material. Sulfide removal should be performed in the field, if practical, prior to pH adjustment with NaOH.

4 This technical holding time is calculated from the time of sample collection to sample extraction. Sample extracts are to be analyzed within 40 days of extraction. It is recommended that samplers ship samples to the laboratory on the same day that they are collected, or as soon as possible thereafter.

3.2 Complete Documentation

Samplers must complete all documentation, including the recording of the CLP Sample Number on the sample container or bottle, sample labels, and chain-of-custody seals (as appropriate), the completion of the TR/COC Record, and the completion of field operations records (as necessary).

Samplers should use the FORMS II Lite software to create and print sample labels and the TR/COC Record. Samplers can create and print out two copies of a sample label and attach one to the sample container or bottle, and place the other on the sample tag that may be attached to the sample container or bottle.

Samplers are expected to review their project plans to determine what documentation they are expected to include during a sampling event. It is highly recommended that samplers provide documentation, even if the Region does not require it.

Note: Under no circumstances should the site name appear on any documentation being sent to the laboratory.

An example of a packaged sample is shown in Figure 3-1. A description of each type of documentation and instructions for accurate completion are included in the following sections.

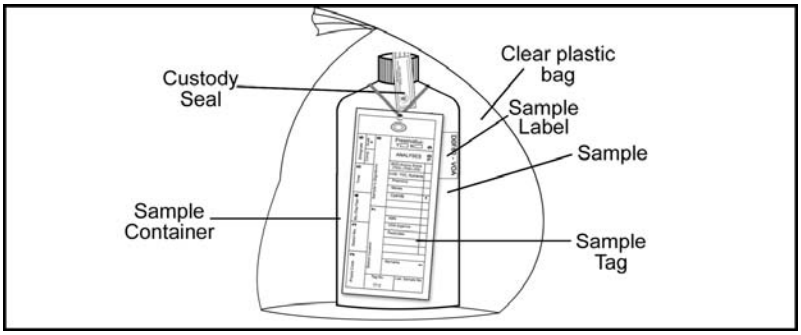

Figure 3-1. Packaged Sample with Identification and Chain-of-Custody Documentation (Excluding TR/COC Record)

3.2.1 Identify a Sample with a CLP Sample Number and SMO-assigned Case Number

The CLP Sample Number and SMO-assigned Case Number **must** be recorded on each sample taken during a sampling event (see Section 1.4.1.1). Samplers can record these numbers on the sample bottle or container using permanent ink. The numbers must also be recorded on the sample tag, if required.

Note: Dissolved metal samples and total metal samples taken from the same sampling location cannot have the same CLP Sample Number because two different sets of data will be generated.

3.2.2 Complete TR/COC Records

A Traffic Report is used as physical evidence of sample custody and as a permanent record for each sample collected. A chain-of-custody record documents the exchange and transportation of samples from the field to the laboratory.

The ASB requires samplers to use the FORMS II Lite software to create documentation for all CLP sampling efforts. For assistance with obtaining or using the FORMS II Lite software, please contact the FORMS II Lite Help Desk at 703-818-4200 from 9:00 AM - 5:00 PM ET.

To meet CLP sample documentation and chain-of-custody requirements, the sampler must attach a separate TR/COC Record to each cooler they ship. The TR/COC Record must document each sample within the cooler. Samples shipped in other coolers should not be documented. This practice maintains the chain-of-custody for all samples in case of incorrect shipment.

If more than one TR/COC Record is used for the samples within one cooler, all of the records must have complete header information and original signatures. Samplers are responsible for the care and custody of samples from the time of collection to the time of shipment to the laboratories for analysis. A sample is considered under custody if:

- It is in possession or in view after being in possession;
- It was in possession and then secured or sealed to prevent tampering; or
- It was in possession when placed in a secured area.

Each time the custody of samples is turned over to another person, the TR/COC Record must be signed off by the former custodian and accepted by the new custodian. Samplers are, therefore, responsible for properly completing any forms or other Region-required documentation used to establish the chain-of-custody for each sample during a sampling event.

3.2.2.1 Complete a TR/COC Record Using the FORMS II Lite Software

Once the sampler inputs sample collection information into FORMS II Lite, a TR/COC Record will be generated electronically. The software automatically displays only the information to be entered by the sampler. FORMS II Lite then generates a laboratory and a Regional copy of the TR/COC Record (see Figures 3-2 through 3-5). The sampler can print out multiple copies of the TR/COC Record as necessary. The sampler must sign and submit original copies of the TR/COC Record as appropriate.

An electronic TR/COC Record created using the FORMS II Lite software contains basic header information; however, the sampler can also include some additional detailed information. For example, not only is the sample matrix listed on the electronic TR/COC Record, but the name of the sampler taking the sample can also be entered. Samplers should note that certain information will not appear on the electronic TR/COC Record (e.g., matrix and preservative descriptions).

3.2.2.2 Indicate Modified Analysis on FORMS II Lite TR/COC Records

When completing a TR/COC Record using FORMS II Lite, the sampler should identify any samples that will be analyzed using a CLP Modified Analysis. Samplers should indicate use of a Modified Analysis by creating a new analysis within the FORMS II Lite Wizard or through the FORMS II Lite Reference Tables. This newly-created analysis should contain the Modification Reference Number within the name assigned to the analysis. For example, if a Region submits a Modified Analysis for an additional analyte, and SMO assigns the Modification Reference Number 1301.0, the FORMS II Lite analysis could be named "VOA by M.A. 1301.0". The associated abbreviation for this analysis could be "VOA M.A.". If you have any questions regarding identification of Modified Analysis using FORMS II Lite, please contact the FORMS II Lite Help Desk at 703-818-4200 from 9:00 AM - 5:00 PM ET.

3.2.2.3 Make Manual Edits to Printed FORMS II Lite TR/COC Records

If a FORMS II Lite TR/COC Record has been printed and deletions or edits need to be made by the sampler, the following procedures must be followed:

- If making a deletion, manually cross out the information to be disregarded from the TR/COC Record, initial and date the deletion.
- If making an addition, enter the new information and initialsign and date the newly added information.

Note: All modifications made on a printed TR/COC Record must be initialed and dated.

USEPA Contract Laboratory Program
Organic Traffic Report & Chain of Custody Record

Case No:	**39400**
DAS No:	DAS9000
SDG No:	

L

Date Shipped:	2/20/2001
Carrier Name:	DHL
Airbill:	121212
Shipped to:	Organic Laboratory 1234 Smith Drive Anywhere, USA 12345 (123) 456-7890

Chain of Custody Record

Relinquished By	(Date / Time)	Received By	(Date / Time)
1			
2			
3			
4			

Sampler Signature:

For Lab Use Only

Lab Contract No: _____
Unit Price: _____
Transfer To: _____
Lab Contract No: _____
Unit Price:

ORGANIC SAMPLE No.	MATRIX/ SAMPLER	CONC/ TYPE	ANALYSIS/ TURNAROUND	TAG No./ PRESERVATIVE/ Bottles	STATION LOCATION	SAMPLE COLLECT DATE/TIME		INORGANIC SAMPLE No.	FOR LAB USE ONLY Sample Condition On Receipt
C0075	Industrial Process Wastewater/ BOBBY SAMPLER	H/C	BNA/PEST (21), VOA (21)	6486, 6487 (2)	LOCATION ONE	S: 2/20/2001 E: 2/23/2001	16:02 16:02	MC0075	
C0076	Ground Water/ JOE SAMPLER	L/C	BNA/PEST (21), VOA (21)	6494, 6495 (2)	LOCATION TWO	S: 2/20/2001 E: 2/21/2001	16:01 16:01	MC0076	
C0077	Industrial Effluent Wastewater/ JOE SAMPLER	M/G	BNA/PEST (21), VOA (21)	6502, 6503 (2)	LOCATION ONE	S: 2/16/2001 E: 2/20/2001	15:55 15:55	MC0077	

Shipment for Case Complete?N	Sample(s) to be used for laboratory QC: C0077	Additional Sampler Signature(s):	Cooler Temperature Upon Receipt:	Chain of Custody Seal Number:	
Analysis Key:	**Concentration:** L = Low, M = Low/Medium, H = High	**Type/Designate:** Composite = C, Grab = G		**Custody Seal Intact?** ___	**Shipment Iced?** ___

BNA/PEST = CLP TCL Semivolatiles and Pesticides/PC, VOA = CLP TCL Volatiles

TR Number: 3-103823254-022001-0001

LABORATORY COPY

PR provides preliminary results. Requests for preliminary results will increase analytical costs.
Send Copy to: Sample Management Office, Attn: Heather Bauer, CSC, 15000 Conference Center Dr., Chantilly, VA 20151-3819; Phone 703/818-4200; Fax 703/818-4602

F2V5.1.047 **Page 1 of 1**

Figure 3-2. Organic Traffic Report & Chain of Custody Record (Laboratory Copy)

USEPA Contract Laboratory Program
Inorganic Traffic Report & Chain of Custody Record

Case No:	**39400**
DAS No:	DAS9000
SDG No:	

L

Date Shipped:	2/20/2001
Carrier Name:	DHL
Airbill:	121212
Shipped to:	Inorganic Laboratory 1234 Smith Drive Anywhere, USA 12345 (123) 456-7890

Chain of Custody Record

Sampler Signature:

Relinquished By	(Date / Time)	Received By	(Date / Time)
1			
2			
3			
4			

For Lab Use Only

Lab Contract No: _____
Unit Price: _____
Transfer To: _____
Lab Contract No: _____
Unit Price:

INORGANIC SAMPLE No.	MATRIX/ SAMPLER	CONC/ TYPE	ANALYSIS/ TURNAROUND	TAG No./ PRESERVATIVE/ Bottles	STATION LOCATION	SAMPLE COLLECT DATE/TIME		ORGANIC SAMPLE No.	FOR LAB USE ONLY Sample Condition On Receipt
MC0075	Industrial Process Wastewater/ BOBBY SAMPLER	H/C	Al (21), Ba (21), Ca (21), Cr (21), TM/CN (21)	6481, 6482, 6483, 6484, 6485 (5)	LOCATION ONE	S: 2/20/2001 E: 2/23/2001	16.02 16:02	C0075	
MC0076	Ground Water/ JOE SAMPLER	L/C	Al (21), Ba (21), Ca (21), Cr (21), TM/CN (21)	6489, 6490, 6491, 6492, 6493 (5)	LOCATION TWO	S: 2/20/2001 E: 2/21/2001	16:01 16:01	C0076	
MC0077	Industrial Effluent Wastewater/ JOE SAMPLER	M/G	Al (21), Ba (21), Ca (21), Cr (21), TM/CN (21)	6497, 6498, 6499, 6500, 6501 (5)	LOCATION ONE	S: 2/16/2001 E: 2/20/2001	15:55 15:55	C0077	

Shipment for Case Complete?N	Sample(s) to be used for laboratory QC: MC0077	Additional Sampler Signature(s):	Cooler Temperature Upon Receipt:	Chain of Custody Seal Number:	
Analysis Key:	**Concentration:** L = Low, M = Low/Medium, H = High	**Type/Designate:** Composite = C, Grab = G		**Custody Seal Intact?** ___	**Shipment Iced?** ___

Al = Aluminum, Ba = Barium, Ca = Calcium, Cr = Chromium, TM/CN = CLP TAL Total Metals and Cyanide

TR Number: 3-103823254-022001-0003

LABORATORY COPY

PR provides preliminary results. Requests for preliminary results will increase analytical costs.
Send Copy to: Sample Management Office, Attn: Heather Bauer, CSC, 15000 Conference Center Dr., Chantilly, VA 20151-3819; Phone 703/818-4200; Fax 703/818-4602

F2V5.1.047 **Page 1 of 1**

Figure 3-3. Inorganic Traffic Report & Chain of Custody Record (Laboratory Copy)

USEPA Contract Laboratory Program
Organic Traffic Report & Chain of Custody Record

Case No:	39400
DAS No:	DAS9000

R

Region:	3	Date Shipped:	2/20/2001	Chain of Custody Record	Sampler Signature:
Project Code:	QW-123	Carrier Name:	DHL	Relinquished By (Date / Time)	Received By (Date / Time)
Account Code:	ACCT000	Airbill:	121212	1	
CERCLIS ID:		Shipped to:	Organic Laboratory 1234 Smith Drive Anywhere, USA 12345 (123) 456-7890	2	
Spill ID:	ID3			3	
Site Name/State:	REAL SITE, UT			4	
Project Leader:	DAN SAMPLER				
Action:	Other				
Sampling Co:	SMITH CO.				

ORGANIC SAMPLE No.	MATRIX/ SAMPLER	CONC/ TYPE	ANALYSIS/ TURNAROUND	TAG No./ PRESERVATIVE/ Bottles	STATION LOCATION	SAMPLE COLLECT DATE/TIME	INORGANIC SAMPLE No.	QC Type
C0075	Industrial Process Wastewater/ BOBBY SAMPLER	H/C	BNA/PEST (21), VOA (21)	6486, 6487 (2)	LOCATION ONE	S: 2/20/2001 16:02 E: 2/23/2001 16:02	MC0075	--
C0076	Ground Water/ JOE SAMPLER	L/C	BNA/PEST (21), VOA (21)	6494, 6495 (2)	LOCATION TWO	S: 2/20/2001 16:01 E: 2/21/2001 16:01	MC0076	Spike
C0077	Industrial Effluent Wastewater/ JOE SAMPLER	M/G	BNA/PEST (21), VOA (21)	6502, 6503 (2)	LOCATION ONE	S: 2/16/2001 15:55 E: 2/20/2001 15:55	MC0077	--

Shipment for Case Complete? N	Sample(s) to be used for laboratory QC: C0077	Additional Sampler Signature(s):	Chain of Custody Seal Number:
Analysis Key:	Concentration: L = Low, M = Low/Medium, H = High	Type/Designate: Composite = C, Grab = G	Shipment Iced? _____
BNA/PEST = CLP TCL Semivolatiles and Pesticides/PC, VOA = CLP TCL Volatiles			

TR Number: 3-103823254-022001-0001

REGION COPY

PR provides preliminary results. Requests for preliminary results will increase analytical costs.

Send Copy to: Sample Management Office, Attn: Heather Bauer, CSC, 15000 Conference Center Dr., Chantilly, VA 20151-3819; Phone 703/818-4200; Fax 703/818-4602

F2V5.1.047 Page 1 of 1

Figure 3-4. Organic Traffic Report & Chain of Custody Record (Region Copy)

USEPA Contract Laboratory Program
Inorganic Traffic Report & Chain of Custody Record

Case No:	**Y6767**		R
DAS No:	DAS9000		

Region:	3	**Date Shipped:**	2/20/2001	**Chain of Custody Record**	**Sampler Signature:**
Project Code:	QW-123	**Carrier Name:**	DHL	**Relinquished By (Date / Time)**	**Received By (Date / Time)**
Account Code:	ACCT000	**Airbill:**	121212	1	
CERCLIS ID:		**Shipped to:**	Clayton Environmental Consultants, Inc 22345 Roethel Drive Novi MI 48375 (248) 344-1770	2	
Spill ID:	ID3			3	
Site Name/State:	REAL SITE, UT			4	
Project Leader:	DAN SAMPLER				
Action:	Other				
Sampling Co:	SMITH CO.				

INORGANIC SAMPLE No.	MATRIX/ SAMPLER	CONC/ TYPE	ANALYSIS/ TURNAROUND	TAG No./ PRESERVATIVE/ Bottles	STATION LOCATION	SAMPLE COLLECT DATE/TIME		ORGANIC SAMPLE No.	QC Type
MC0075	Industrial Process Wastewater/ BOBBY SAMPLER	H/C	Al (21), Ba (21), Ca (21), Cr (21), TM/CN (21)	6481, 6482, 6483, 6484, 6485 (5)	LOCATION ONE	S: 2/20/2001 E: 2/23/2001	16:02 16:02	C0075	--
MC0076	Ground Water/ JOE SAMPLER	L/C	Al (21), Ba (21), Ca (21), Cr (21), TM/CN (21)	6489, 6490, 6491, 6492, 6493 (5)	LOCATION TWO	S: 2/20/2001 E: 2/21/2001	16:01 16:01	C0076	Spike
MC0077	Industrial Effluent Wastewater/ JOE SAMPLER	M/G	Al (21), Ba (21), Ca (21), Cr (21), TM/CN (21)	6497, 6498, 6499, 6500, 6501 (5)	LOCATION ONE	S: 2/16/2001 E: 2/20/2001	15:55 15:55	C0077	--

Shipment for Case Complete? N	**Sample(s) to be used for laboratory QC:**	**Additional Sampler Signature(s):**	**Chain of Custody Seal Number:**
Analysis Key:	**Concentration:** L = Low, M = Low/Medium, H = High	**Type/Designate:** Composite = C, Grab = G	**Shipment Iced?** _____
Al = Aluminum, Ba = Barium, Ca = Calcium, Cr = Chromium, TM/CN = CLP TAL Total Metals and Cyanide			

TR Number: 3-103823254-022001-0003

REGION COPY

PR provides preliminary results. Requests for preliminary results will increase analytical costs.

Send Copy to: Sample Management Office, Attn: Heather Bauer, CSC, 15000 Conference Center Dr., Chantilly, VA 20151-3819; Phone 703/818-4200; Fax 703/818-4602

F2V5.1.047 **Page 1 of 1**

Figure 3-5. Inorganic Traffic Report & Chain of Custody Record (Region Copy)

3.2.3 Complete and Attach Custody Seals

Custody seals are usually pre-printed stickers that are signed (or initialed) and dated by the sampler after sample collection and placed on sample bottles or containers and/or shipping coolers or containers (see Figure 3-6). The custody seals document who sealed the sample container and verifies that the sample has not been tampered with. The seals must be placed such that they will break if the sample bottle or container or the shipping cooler or container is tampered with or opened after leaving custody of samplers. Custody seals can also be used to maintain custody of other items such as envelopes containing videotapes of the sample collection process.

Note

Custody seals should never be placed directly onto a coring tool used as a transport device (e.g., 5 g Sampler) or tared, 40 mL closed-system vials. The seals must be placed on the bag for the coring tool used as a transport device, or on the bag used to enclose the vials. Refer to Appendix B for details.

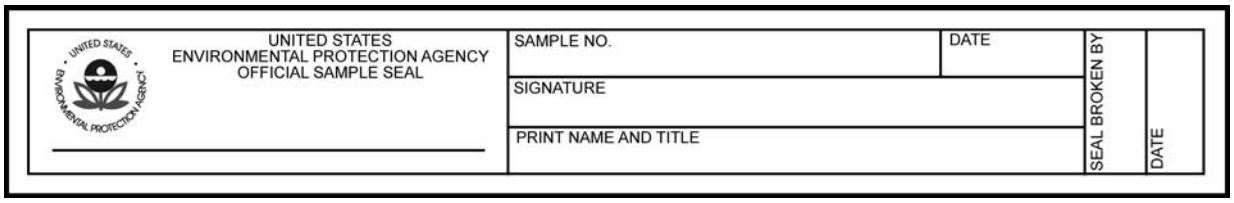

Figure 3-6. Custody Seal

Instructions for completing and attaching a custody seal are included in Table 3-5.

Table 3-5. Completing and Attaching a Custody Seal

Step	Action	Important Notes
1	Record the CLP Sample Number.	The space for the CLP Sample Number does not need to be completed on custody seals being placed on the opening of a cooler, only on those being placed on the opening of sample bottles or containers.
2	Record the month, day, and year of sample collection.	
3	Sign the seal in the Signature field.	
4	Print your name and title in the Print Name and Title field.	
5	Place the custody seal over the edge of the sample bottle or container such that it will break if tampered with.	Custody seals can be placed directly on any sample container except for coring tools used as a transport device (e.g., 5 g Samplers) and tared VOA bottles. If packing coring tools used as a transport device or tared VOA bottles, place them in a clear plastic bag and place the custody seal on the outside of the bag.
6	If possible, cover the custody seal with clear plastic tape to protect it.	Take special care to not place the protective tape over the seal in such a way that it can be removed and then re-attached without signs of tampering.

The use and type of custody seals can vary by Region or collecting organization. Samplers should obtain the appropriate custody seals and specific instructions for correctly attaching them from the RSCC.

3.2.4 Complete and Attach Sample Labels

Samplers affix sample labels to each sample container. A sample label must contain the associated CLP Sample Number (either written or pre-printed), SMO-assigned Case Number, and the preservative used. It must also denote the analysis/fraction. Samplers may also include additional information such as the station location or the date/time of collection. Samplers should use FORMS II Lite to create and print sample labels. The sampler can print two labels and attach one to the sample container or bottle, and place the other label on the sample tag that should also be attached to the sample container or bottle. The

labels should then be covered with clear packaging tape to protect the label and maintain legibility. If handwriting a sample label, the sampler should complete the label information using waterproof ink, place the label on the outside of the sample bottle or container, then cover the label with clear packaging tape to protect the label and maintain legibility (see Figure 3-1).

Note: Do not attach labels to tared VOA sample vials. A label should already be pre-attached to the tared vial.

3.2.5 Complete and Attach Sample Tags

To support use of sample data in potential enforcement actions, sample characteristics other than on-site measurements (e.g., pH, temperature, conductivity) can be identified with a sample tag. Typically, site-specific information is written on the tags using waterproof ink. The use and type of sample tags may vary by Region. For each sampling event, samplers should receive the required sample tags and type of information to include from the RSCC. The sampler can use FORMS II Lite to create and print out multiple sample labels, one of which can be attached to the sample tag and then covered with clear packaging tape to protect the label and maintain legibility. If FORMS II Lite-created sample labels are not available, a detailed set of instructions for completing and attaching a handwritten sample tag are included in Table 3-6.

Note: The use and type of sample tags may vary among Regions.

Table 3-6. Completing and Attaching a Handwritten Sample Tag

Step	Action	Important Notes
1	Under the "Remarks" heading, record the CLP Sample Number and SMO-assigned Case Number.	Make sure to record the correct CLP Sample Number and SMO-assigned Case Number in a legible manner.
2	Record the project code (e.g., Contract Number, Work Assignment Number, Interagency Agreement Number, etc.) assigned by USEPA.	
3	Enter the station number assigned by the sampling team coordinator.	
4	Record the month, day, and year of sample collection.	
5	Enter the military time of sample collection (e.g., 13:01 for 1:01 PM).	
6	Identify the designate and place an "X" in either the "Comp." or "Grab" box if the sample is either a composite or grab sample.	
7	Record the station location.	
8	Sign the sample tag in the Signature area.	
9	Place an "X" in the box next to Yes or No to indicate if a preservative was added to the sample.	
10	Under "Analyses", place an "X" in the box next to the parameters for which the sample is to be analyzed.	
11	Leave the box for "Laboratory Sample Number" blank.	
12	It is recommended that the sample tag be attached to the neck of the sample bottle or container using regular string, stretch string, or wire (see Figure 3-1).	Do **NOT** use wire to attach a sample tag to a metals sample.

An example of a completed sample tag is included in Figure 3-7 below:

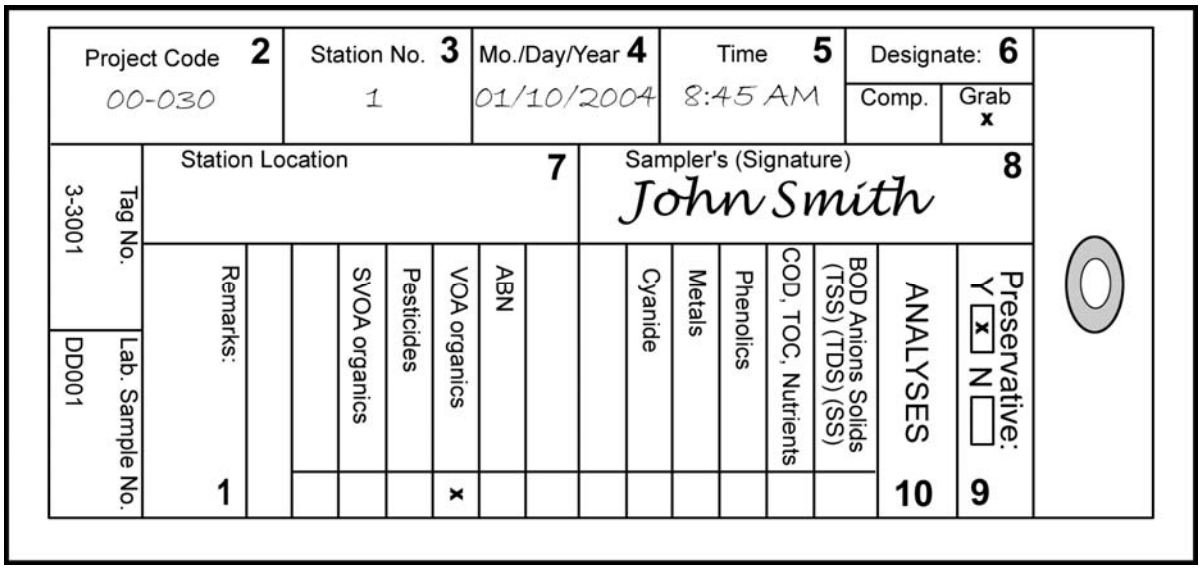

Figure 3-7. Completed Sample Tag

3.3 Provide Sample Receipt

After samples have been taken from private property, the sampler should prepare a receipt for these samples and provide this receipt to the property owner. This is especially important when sampling on private property since these samples could be used during future litigation and the receipt will verify that the owner granted approval for the removal of the samples from the property. An example of a sample receipt created using FORMS II Lite is shown in Figure 3-8.

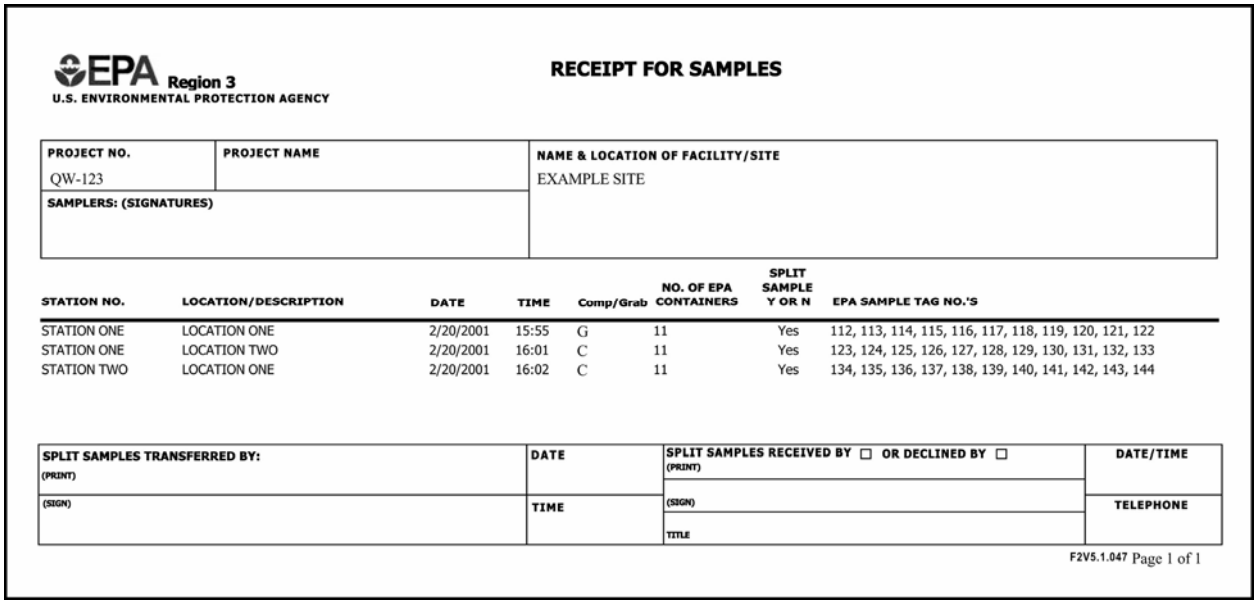

EPA Region 3
U.S. ENVIRONMENTAL PROTECTION AGENCY

RECEIPT FOR SAMPLES

PROJECT NO.	PROJECT NAME	NAME & LOCATION OF FACILITY/SITE
QW-123		EXAMPLE SITE
SAMPLERS: (SIGNATURES)		

STATION NO.	LOCATION/DESCRIPTION	DATE	TIME	Comp/Grab	NO. OF EPA CONTAINERS	SPLIT SAMPLE Y OR N	EPA SAMPLE TAG NO.'S
STATION ONE	LOCATION ONE	2/20/2001	15:55	G	11	Yes	112, 113, 114, 115, 116, 117, 118, 119, 120, 121, 122
STATION ONE	LOCATION TWO	2/20/2001	16:01	C	11	Yes	123, 124, 125, 126, 127, 128, 129, 130, 131, 132, 133
STATION TWO	LOCATION ONE	2/20/2001	16:02	C	11	Yes	134, 135, 136, 137, 138, 139, 140, 141, 142, 143, 144

SPLIT SAMPLES TRANSFERRED BY: (PRINT)	DATE	SPLIT SAMPLES RECEIVED BY ☐ OR DECLINED BY ☐ (PRINT)	DATE/TIME
(SIGN)	TIME	(SIGN)	TELEPHONE
		TITLE	

F2V5.1.047 Page 1 of 1

Figure 3-8. Sample Receipt Created Using the FORMS II Lite Software

3.4 Pack and Ship Samples

Once the samples have been collected, it is very important that the sampler properly package the samples for shipment and ensure that the samples are sent to the appropriate laboratory as quickly as possible. Prompt and proper packaging of samples will:

- Protect the integrity of samples from changes in composition or concentration caused by bacterial growth or degradation from increased temperatures;
- Reduce the chance of leaking or breaking of sample containers that would result in loss of sample volume, loss of sample integrity, and exposure of personnel to toxic substances; and
- Help ensure compliance with shipping regulations.

3.4.1 Sample Containers

Once samples are collected, they must be stored in conditions that maintain sample integrity. All samples should be placed in shipping containers or other suitable containers with ice to reduce the temperature as soon as possible after collection. Ideally, all samples should be shipped the day of collection for overnight delivery to the laboratory. If samples cannot be shipped on the day of collection, the sample temperature should be maintained at 4°C (±2°C) until they are shipped to the laboratory.

One CLP RAS sample may be contained in several bottles and vials. For example, one soil sample may consist of all containers needed for three of the analytical fractions available under this service (i.e., SVOA fraction, Pesticide fraction, and Aroclor fraction), even though the fractions are collected in separate containers. Therefore, the analysis to be performed and the matrix type will determine the type of container(s) that will be used, as well as the volume that must be collected for that particular sample fraction.

3.4.2 Inventory of Samples and Documentation

Prior to shipment, samplers should conduct an inventory of the contents of the shipping cooler or container against the corresponding TR/COC Record when packing for shipment to laboratories. An inventory will ensure that the proper number of containers have been collected for each analysis of the samples, that the required PE and QC samples and cooler temperature blanks are included, and the correct Sample Numbers and fractions have been assigned to each sample.

3.4.3 Shipping Regulations

Sample shipping personnel are legally responsible for ensuring that the sample shipment will comply with all applicable shipping regulations. For example, hazardous material samples must be packaged, labeled, and shipped in compliance with all IATA Dangerous Goods regulations or DOT regulations and USEPA guidelines. Refer to Appendix B for detailed shipping guidelines when using SW-846 Method 5035A to preserve and ship samples.

3.4.4 Sample Packaging for Shipment

Samplers are responsible for the proper packaging of samples for shipment. To ensure that samples are appropriately packaged (e.g., to avoid breakage and/or contamination) the sampler should consult their respective project plans to determine the proper packing and shipping procedures. The sampler must determine the sample type, pack the shipping containers correctly, include necessary paperwork, label and seal shipping containers or coolers, and ship the samples.

3.4.4.1 Determine the Sample Type and Container

Samplers should know what kinds of samples they are handling to ensure proper packaging. Samplers should refer to their appropriate project plans to determine which type of sample container should be used for each type of sample being taken during the sampling event.

Note: Please follow Regional guidance with reference to samples containing dioxin or radioactive waste.

3.4.4.2 Pack Shipping Containers

It is imperative that samples are correctly and carefully packed in shipping containers to prevent the sample containers from breaking or leaking. Samplers must prepare and pack a shipping cooler or container according to the instructions outlined in Table 3-7.

Table 3-7. Packing Samples for Shipment

Step	Action	Important Notes
1	Seal all drain holes in the shipping container, both inside and out, to prevent leakage in the event of sample breakage.	
2	Check all lids/caps to make sure the samples are tightly sealed and will not leak.	
3	Seal samples within a clear plastic bag.	Custody seals can be placed directly on any sample container except for coring tools used as a transport device (e.g., 5 g Samplers) and tared VOA bottles. If packing coring tools used as a transport device or tared VOA bottles, place them in a clear plastic bag and place the custody seal on the outside of the bag.
4	Fully chill samples to 4°C (±2°C) prior to placement within suitable packing materials.	
5	Prior to placing samples within the shipping cooler, it is recommended that samplers line shipping containers with non-combustible, absorbent packing material.	
6	Place samples in CLEAN, sealed, watertight shipping containers (metal or hard plastic coolers).	
7	Conduct an inventory of the contents of the shipping cooler/container against the corresponding TR/COC Record.	
8	Cover samples in double-bagged ice to prevent water damage to packing materials.	Do NOT pour loose ice directly into the sample cooler. The ice is used to maintain the temperature of the samples within the shipping cooler.
9	It is recommended a temperature blank be included within each cooler being shipped.	The temperature blank is generally a 40 L vial filled with water and labeled “temperature blank” but does not have a Sample Number.
10	Ensure that the site name or other site-identifying information does not appear on any documentation being sent to the laboratory.	The laboratory should not receive any site-identifying information.

3.4.4.3 Include Necessary Paperwork

Samplers must properly place the necessary paperwork in the shipping cooler. All paperwork must be placed in a plastic bag or pouch and then secured to the underside of the shipping cooler lids (see Figure 3-9).

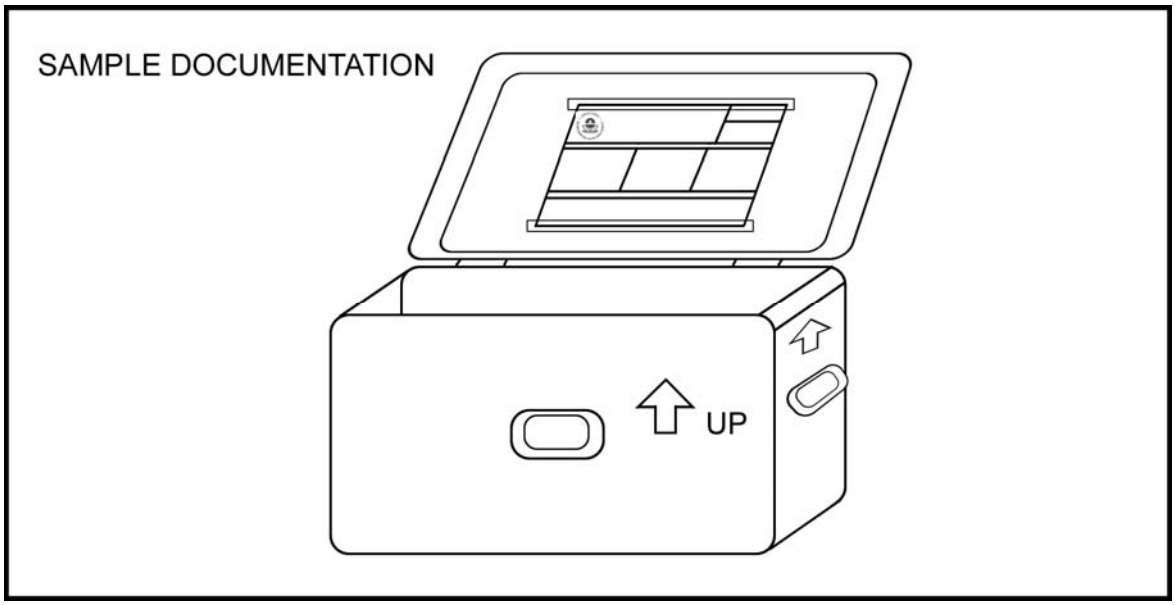

Figure 3-9. Sample Cooler with Attached TR/COC Record and Cooler Return Documentation

Necessary paperwork includes TR/COC Records and sample weight logs (see Figure 3-10), if required (for VOA samples). Samplers should contact their RSCC (or designee) for specific paperwork requirements.

USEPA Contract Laboratory Program
Sample Weight Log

Shipped to: AAA Testing Laboratory
1700 Mill Avenue
Houston TX 77099
(281) 983-1234

Case No. 39563
DAS No. DAS34
Date Shipped: 9/29/2003

Sample No.	Matrix	Analysis	Preservative	Bottle/ Tag Number	Tared Weight (g)	Final Weight (g)	Sample Weight (g)	Laboratory Weight	Traffic Report No.
C0036	Subsurface Soil (>12")	CLP TCL Volatiles	Ice Only	199548	32.80	37.20	4.40		3-103018225-092903-0001
C0036	Subsurface Soil (>12")	CLP TCL Volatiles	Ice Only	199547	32.10	38.30	6.20		3-103018225-092903-0001
C0036	Subsurface Soil (>12")	CLP TCL Volatiles	Ice Only	199549	31.20	38.60	7.40		3-103018225-092903-0001
C0037	Surface Soil (0"-12")	CLP TCL Volatiles	Ice Only	199552	32.00	36.90	4.90		3-103018225-092903-0001
C0037	Surface Soil (0"-12")	CLP TCL Volatiles	Ice Only	199551	32.40	37.10	4.70		3-103018225-092903-0001
C0037	Surface Soil (0"-12")	CLP TCL Volatiles	Ice Only	199550	31.90	35.90	4.00		3-103018225-092903-0001

Completed By:	Date:

All weights are measured in grams

Figure 3-10. Sample Weight Log

3.4.4.4 Return Sample Shipping Coolers

CLP laboratories must routinely return sample shipping coolers within 14 calendar days following shipment receipt. Therefore, the sampler should also include cooler return instructions with each shipment. The sampler (not the CLP laboratory) is responsible for paying for return of the cooler and should also include shipping airbills bearing the sampler's account number, as well as a return address to allow for cooler return.

3.4.4.5 Label and Seal Sample Shipping Coolers

After samples are packaged within shipping coolers, samplers must carefully secure the top and bottom of the coolers with tape, place return address labels clearly on the outside of the cooler, and attach the required chain-of-custody seals (see Figure 3-11).

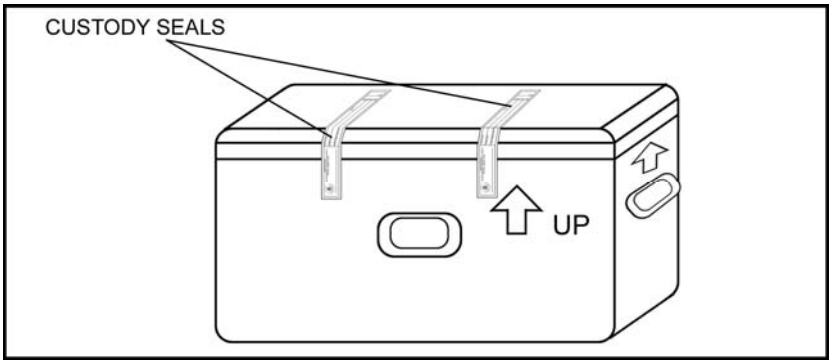

Figure 3-11. Shipping Cooler with Custody Seals

If more than one cooler is being delivered to a laboratory, samplers should mark each cooler as "1 of 2", "2 of 2", etc. In addition, samplers must accurately complete and attach shipping airbill paperwork for shipment of the samples to the laboratory. An airbill, addressed to the Sample Custodian of the receiving laboratory, should be completed for each cooler shipped. Samplers should receive the correct name, address, and telephone number of the laboratory to which they must ship samples from the RSCC or SMO. To avoid delays in analytical testing, samplers should make sure they are sending the correct types of samples to the correct laboratory when collecting samples for multiple types of analysis. For example, inorganic samples may be shipped to one laboratory for analysis, while organic samples may need to be shipped to another laboratory.

3.4.4.6 Ship Samples

The sampling contractor should ensure that samplers know the shipping company's name, address, and telephone number. In addition, they should be aware of the shipping company's hours of operation, shipping schedule, and pick-up/drop-off requirements.

Overnight Delivery

It is imperative that samples be sent via overnight delivery. Delays caused by longer shipment times may cause technical holding times to expire, which in turn may destroy sample integrity or require the recollection of samples for analysis.

Saturday Delivery

For shipping samples for Saturday delivery, the sampler MUST contact the RSCC (or their designee) or SMO so that SMO will receive the delivery information by 3:00 PM ET on the Friday prior to delivery.

3.4.5 Shipment Notification

When samples are shipped to CLP Laboratories, samplers **must immediately** report all sample shipments to the RSCC (or their designee) or to SMO. **Under no circumstances should the sampler contact the laboratory directly.** If samplers are shipping samples after 5:00 PM ET, they must notify the RSCC (or

designee) or SMO by 8:00 AM ET on the following business day. Samplers should receive the name and phone number of the appropriate SMO coordinator to contact from the Region/RSCC.

Samplers must provide the following information to the RSCC (or their designee) or to SMO:

- Name and phone number at which they can easily be reached (preferably closest on-site phone number if still in the field);
- SMO-assigned Case Number (see Section 2.4.1);
- Number, concentration, matrix and analysis of samples being shipped;
- Name of laboratory (or laboratories) to which the samples were shipped;
- Airbill number(s);
- Date of shipment;
- Case status (i.e., whether or not the Case is complete);
- Problems encountered, special comments, or any unanticipated issues;
- When to expect the next anticipated shipment; and
- An electronic export of the TR/COC Record (must be sent as soon as possible after sample shipment). For information regarding electronic export of TR/COC Records, refer to the following Web site:

http://www.epa.gov/superfund/programs/clp/f2lsubmit.htm

Note

For Saturday delivery, samplers MUST contact the RSCC (or their designee) or SMO so that SMO will receive the delivery information by 3:00 PM ET on the Friday prior to delivery.

Samplers should be aware if their Region requires them to notify the RSCC (or designee) and/or SMO of sample shipment.

THIS PAGE INTENTIONALLY LEFT BLANK

Appendix A: Functions within a Sampling Project

The following table describes Quality Assurance Project Plan (QAPP) requirements taken from *EPA Requirements for Quality Assurance Project Plans* (EPA QA/R-5).

Functions Within a Sampling Project	Elements of that Function
Project Management	
Project/Task Organization	Identifies the individuals or organizations participating in the project and defines their specific roles and responsibilities.
Problem Definition/Background	States the specific problem to be solved or decision to be made and includes sufficient background information to provide a historical and scientific perspective for each particular project.
Project/Task Description	Describes the work to be performed and the schedule for implementation to include: • Measurements to be made during the course of the project; • Applicable technical, regulatory, or program-specific quality standards, criteria, or objectives; • Any special personnel and equipment requirements; assessment tools needed; and • A work schedule and any required project and quality records, including types of reports needed.
Quality Objectives and Criteria	Describes the project quality objectives and measurement performance criteria.
Special Training/Certification	Ensures that any specialized training for non-routine field sampling techniques, field analyses, laboratory analyses, or data validation should be specified.
Documents and Records	• Itemizes the information and records that must be included in the data report package and specifies the desired reporting format for hard copy and electronic forms, when used. • Identifies any other records and/or documents applicable to the project such as audit reports, interim progress reports, and final reports that will be produced. • Specifies or references all applicable requirements for the final disposition of records and documents, including location and length of retention period.
Data Generation and Acquisition	
Sampling Process Design (Experimental Design)	• Describes the experimental design or data collection design for the project. • Classifies all measurements as critical or non-critical.
Sampling Methods	• Describes the procedures for collecting samples and identifies sampling methods and equipment. Includes any implementation requirements, support facilities, sample preservation requirements, and materials needed. • Describes the process for preparing and decontaminating sampling equipment to include the disposal of decontamination by-products, selection and preparation of sample containers, sample volumes, preservation methods, and maximum holding times for sampling, preparation, and/or analysis. • Describes specific performance requirements for the method. • Addresses what to do when a failure in sampling occurs, who is responsible for corrective action, and how the effectiveness of the corrective action shall be determined and documented
Sample Handling and Custody	• Describes the requirements and provisions for sample handling and custody in the field, laboratory, and transport, taking into account the nature of the samples, the maximum allowable sample holding times before extraction and analysis, and the available shipping options and schedules. • Includes examples of sample labels, custody forms, and sample custody logs.

Analytical Methods	• Identifies the analytical methods and equipment required, including sub-sampling or extraction methods, waste disposal requirements (if any), and specific method performance requirements. • Identifies analytical methods by number, date, and regulatory citation (as appropriate). If a method allows the user to select from various options, the method citations should state exactly which options are being selected. • Addresses what to do when a failure in the analytical system occurs, who is responsible for corrective action, and how the effectiveness of the corrective action shall be determined and documented. • Specifies the laboratory turnaround time needed, if important to the project schedule. • Specifies whether a field sampling and/or laboratory analysis Case Narrative is required to provide a complete description of any difficulties encountered during sampling or analysis.
Quality Control (QC)	• Identifies required measurement QC checks for both the field and laboratory. • States the frequency of analysis for each type of QC check, and the spike compounds sources and levels. • States or references the required control limits for each QC check and corrective action required when control limits are exceeded and how the effectiveness of the corrective action shall be determined and documented. • Describes or references the procedures to be used to calculate each of the QC statistics.
Instrument/Equipment Testing, Inspection, and Maintenance	• Describes how inspections and acceptance testing of environmental sampling and measurement systems and their components will be performed and documented. Identifies and discusses the procedure by which final acceptance will be performed by independent personnel. • Describes how deficiencies are to be resolved and when re-inspection will be performed. • Describes or references how periodic preventative and corrective maintenance of measurement or test equipment shall be performed. • Identifies the equipment and/or system requiring periodic maintenance. • Discusses how the availability of spare parts identified in the operating guidance and/or design specifications of the systems will be assured and maintained.
Instrument/Equipment Calibration and Frequency	• Identifies all tools, gauges, instruments, and other sampling, measuring, and test equipment used for data collection activities affecting quality that must be controlled, and at specific times, calibrated to maintain performance within specified limits. • Identifies the certified equipment and/or standards used for calibration. • Describes or references how calibration will be conducted using certified equipment and/or standards with known valid relationships to nationally recognized performance standards. If no such standards exist, documents the basis for calibration. • Indicates how records of calibration shall be maintained and traced to the instrument.
Inspection/Acceptance of Supplies and Consumables	• Describes how and by whom supplies and consumables shall be inspected and accepted for use in the project. • States acceptance criteria for such supplies and consumables.
Non-direct Measurements	• Identifies any types of data needed for project implementation or decision-making that are obtained from non-measurement sources (e.g., computer databases, programs, literature files, historical databases). • Describes the intended use of data. • Defines the acceptance criteria for the use of such data in the project. • Specifies any limitations on the use of the data.
Data Management	• Describes the project data management scheme, tracing the data path from generation in the field or laboratory to their final use or storage. • Describes or references the standard record-keeping procedures, document control system, and the approach used for data storage and retrieval on electronic media.

Appendix B: CLP Sample Collection Guidelines for VOAs in Soil by SW-846 Method 5035A

A. Preferred Options for the Contract Laboratory Program (CLP) are Options 1, 2, and 3:

Note Soil samples must be placed on their sides prior to being frozen.

Option 1.

Closed-system Vials:

Container - tared or preweighed 40 mL VOA Vials containing a magnetic stir bar.

Collect 5 g of soil per vial (iced or frozen in the field).

Regular Samples	3 Vials - Dry (5 g soil per vial) 1 Vial - Dry (filled with soil, no headspace) 4 Total Vials
Regular Samples Requiring QC Analysis	9 Vials - Dry (5 g soil per vial) 1 Vial - Dry (filled with soil, no headspace) 10 Total Vials

Option 2.

Closed-system Vials Containing Water:

Container - tared or pre-weighed 40 mL VOA vials containing a magnetic stir bar and 5 mL water.

Collect 5 g of soil per vial (iced or frozen in the field).

Regular Samples	2 Vials with water added (5 g soil and 5 mL water per vial) 1 Vial - Dry (5 g soil in vial) 1 Vial - Dry (filled with soil, no headspace) 4 Total Vials (2 with water and 2 dry)
Regular Samples Requiring QC Analysis	6 Vials with water added (5 g soil and 5 mL water per vial) 5 Vials - Dry (5 g soil per vial) 1 Vial - Dry (filled with soil, no headspace) 12 Total Vials (6 with water and 6 dry)

Option 3.

Coring Tool used as a Transport Device

Container - 5 g Samplers or equivalent.

Note All Samplers should be iced or frozen in the field and bagged individually.

Regular Samples	3 Samplers (5 g soil per Sampler) 1 Vial - Dry (filled with soil, no headspace) 4 Total (3 Samplers and 1 Vial)
Regular Samples Requiring QC Analysis	9 Samplers (5 g soil per Sampler) 1 Vial - Dry (filled with soil, no headspace) 10 Total (11 Samplers and 1 Vial)

B. Options 4, 5, and 6 are NOT preferred options for the CLP:

Option 4.

Closed-system Vials:

Container - tared or preweighed 40 mL VOA Vials containing a magnetic stir bar and preservative.

Collect 5 g of soil per vial and add Sodium bisulfate ($NaHSO_4$) preservative (5 mL water + 1 g $NaHSO_4$) - iced or frozen in the field.

Caution: This option is NOT a Preferred Option for the CLP because:

NaHSO4 preservation creates low pH conditions that will cause the destruction of certain CLP target analytes (e.g., vinyl chloride, trichloroethene, trichlorofluoromethane, cis- and trans-1,3-dichloropropene). Projects requiring the quantitation of these analytes should consider alternative sample preservation methods. NaHSO4 also cannot be used on carbonaceous soils. Check the soil before using this method of collection! Soil can be checked by placing a test sample in a clean vial, then adding several drops of NaHSO4 solution. If the soil bubbles, use Option 4b and note this issue on the TR/COC Record.

Option 4a. Samples preserved in the field

Regular Samples	2 Vials with $NaHSO_4$ preservative added (5g soil per vial) 1 Vial without $NaHSO_4$ preservative added (5g soil per vial) 1 Vial - Dry (filled with soil, no headspace) 4 Total Vials (2 with $NaHSO_4$ preservative and 2 without)
Regular Samples Requiring QC Analyses	4 Vials with $NaHSO_4$ preservative added (5g soil per vial) 5 Vials without $NaHSO_4$ preservative added (5 g soil per vial) 1 Vial - Dry (filled with soil, no headspace) 10 Total Vials (4 with $NaHSO_4$ and 6 without)

Option 4b. Samples are preserved by the laboratory (No $NaHSO_4$ preservative is added to these samples in the field).

Regular Samples	3 Vials - Dry (5 g soil per vial) 1 Vial - Dry (filled with soil, no headspace) 4 Total Vials
Regular Samples Requiring QC Analyses	9 Vials - Dry (5 g soil per vial) 1 Vial - Dry (filled with soil, no headspace) 10 Total Vials

Option 5.

Methanol Preservation (medium-level analysis only):

Container - tared or pre-weighed 40 mL VOA vials containing 5-10 mL methanol.

Collect 5 g of soil per vial (iced in the field).

Caution: This is NOT a preferred option for the CLP because:

Samples preserved with methanol can only be analyzed by the medium-level method. Low-level Contract Required Quantitation Limit (CRQLs) cannot be achieved when samples are preserved this way.

Additional problems associated with use of methanol as a preservative in the field include:

- Possible contamination of the methanol by sampling-related activities (e.g., absorption of diesel fumes from sampling equipment);
- Leakage of methanol from the sample vials during shipping, resulting in loss of VOAs prior to analysis.

Regular Samples	2 Vials (5 g soil and 5-10 mL methanol per vial) 1 Vial - Dry (filled with soil, no headspace) 3 Total Vials (2 with methanol and 1 dry)
Regular Samples Requiring QC Analysis	6 Vials (5 g soil and 5-10 mL methanol per vial) 1 Vial -Dry (filled with soil, no headspace) 7 Total Vials (6 with methanol and 1 dry)

If shipping samples containing methanol as a preservative, a shipping label must be used to indicate methanol. This label must also contain the United Nations (UN) identification number for methanol (UN 1230), and indicate Limited Quantity.

Option 6.

Glass Containers filled with sample - No Headspace:

Container - 4 oz Glass Jars.

Glass container filled with soil with no headspace and iced.

Caution: This is NOT a preferred option for the CLP because:

Samples collected in this manner lose most of their volatile analytes prior to analysis when the sample containers are opened and sub-sampled in the laboratory. This option is only available due to Regional requirements.

Regular Samples	2 Glass Jars (4 oz) filled with sample, no headspace 1 Vial - Dry (filled with soil, no headspace) 3 Total Containers
Regular Samples Requiring QC Analysis	2 Glass Jars (4 oz) filled with sample, no headspace 1 Vial - Dry (filled with soil, no headspace) 3 Total Containers

C. Caution:

1. Extreme care must be taken to ensure that frozen samples do not break during shipment.
2. Before adding soil to pre-weighed vials containing a stir bar, weigh the vials to confirm the tared weight. If the weight varies by more than 0.1 g, record the new weight on the label and the sample documentation. Do NOT add labels to these vials once the tared weight has been determined/confirmed.

D. Dry Samples:

All options include taking a sample in a dry 40 mL VOA vial (or a 4 oz wide mouth jar) with no headspace. No additional water, $NaHSO_4$, or methanol is added to this sample. This sample is taken to determine moisture content; therefore, it does not need to be tared or have a stir bar.

E. Iced or Frozen Samples:

1. Iced means cooled to 4°C (±2°C) immediately after collection.
2. Frozen means cooled to between -7°C and -15°C immediately after collection.

F. Sample Delivery:

CLP strongly recommends that all samples reach the laboratory by COB the next day after sample collection.

G. Notes:

1. For Option 4, samples can be preserved with $NaHSO_4$ either:
   - In the field; or
   - In the laboratory upon receipt. In this case, the sampler should put the following information in the Preservation Column of the TR/COC Record - "To be preserved at lab with $NaHSO_4$". This Regional Request should also be communicated to SMO so that the laboratory can be notified.
2. Regional QAPPs may require the use of Option 5. Please note that this option is for medium-level analysis ONLY.
3. If water, methanol, or $NaHSO_4$ preservative is added to the vials in the field, a field blank containing the appropriate liquid used in the vials should be sent to the laboratory for analysis.

H. Number of Containers Rationale:

The rationale for the number of containers (vials or samplers) required for the field sample and the required laboratory QC for each option is given as follows:

Option 1.

Rationale for Regular Vials:	1 vial for low-level analysis (water purge) 1 vial for backup low-level analysis 1 vial for medium-level analysis (methanol extraction)
Rationale for QC Vials:	2 vials for MS and MSD low-level analysis 2 vials for MS and MSD medium-level analysis 2 vials for backup (MS and MSD) low-level or medium-level analysis

Option 2.

Rationale for Regular Vials:	1 vial for low-level analysis (water purge) 1 vial for back up low-level analysis 1 vial dry for medium-level analysis (methanol extraction)
Rationale for QC Vials:	2 vials for MS and MSD low-level analysis 2 vials for MS and MSD medium-level analysis 2 vials for backup (MS and MSD) low-level or medium-level analysis
Medium-level: Analysis	Methanol will be added in the laboratory

Option 3.

Rationale for Regular Samples:	1 sampler for low-level analysis (water purge) 1 sampler for back up low-level analysis 1 sampler for medium-level analysis (methanol extraction)
Rationale for QC Samples:	2 samplers for MS and MSD low-level analysis 2 samplers for backup MS and MSD low-level analysis 2 samplers for MS and MSD medium-level analysis 2 samplers for backup MS and MSD medium-level analysis

Option 4a ($NaHSO_4$ added in the field).

Rationale for Regular Vials:	1 vial with water for low-level analysis (water purge) 1 vial with water for backup low-level analysis 1 vial dry for medium-level analysis (methanol extraction)
Rationale for QC Vials:	2 vials with water for MS and MSD low-level analysis 2 vials dry for MS and MSD medium-level analysis 2 vials for backup (MS and MSD) low-level or medium-level analysis

Option 4b ($NaHSO_4$ added in the laboratory).

Rationale for Regular Vials:	1 vial for low-level analysis (water purge) 1 vial for backup low-level analysis 1 vial for medium-level analysis (methanol extraction)
Rationale for QC Vials:	2 vials for MS and MSD low-level analysis 2 vials for MS and MSD medium-level analysis 2 vials for backup (MS and MSD) low-level or medium-level analysis

Option 5.

Rationale for Regular Samples:	1 vial for regular medium-level analysis 1 vial for back up medium-level analysis
Rationale for QC Samples:	2 samples for MS and MSD 2 samples for backup MS and MSD

Option 6.

In this option, all Regular and QC samples for both low-level and medium analysis are taken as subsamples from the same container.

Rationale for Regular Analysis	1 glass jar for low-level analysis and medium-level analysis **1 glass jar for backup low-level analysis and medium-level analysis**
Rationale for QC Analysis:	1 glass jar for low-level analysis and medium-level analysis **1 glass jar for backup low-level analysis and medium-level analysis**

Appendix C: General CLP Sample Collection Guidelines VOAs in Water

Regional guidance and/or specific Project Plan requirements will supersede the guidelines listed below.

Collect the following:

- At least two 40 mL glass containers with polytetrafluoroethylene (PTFE)-lined septa and open top screw-caps that are filled to capacity with no air bubbles, preserved to a pH of 2 with HCl, and cooled to 4°C (±2°C) immediately after collection. DO NOT FREEZE THE SAMPLES.
- If Selected Ion Monitoring (SIM) analysis is requested, at least two additional 40 mL glass containers with PTFE-lined septa and open top screw-caps that are filled to capacity with no air bubbles, preserved to a pH of 2 with HCl, and cooled to 4°C (±2°C) immediately after collection.

Test for Carbonates, Residual Chlorine, Oxidants, and Sulfides:

- It is very important that samplers obtain Regional guidance when testing and ameliorating for:
  - Carbonates;
  - Residual chlorine (e.g., municipal waters or industrial waste waters that are treated with chlorine prior to use or discharge); or
  - Oxidants.
- VOA samples containing carbonates react with the acid preservative causing effervescence (due to formation of carbon dioxide), which can cause loss of volatile analytes.
- Residual chlorine present in VOA samples can continue to react with dissolved organic matter. This continuous reaction may lead to inaccurate quantitation of certain analytes present in the sample at the time of collection.
- Residual chlorine and oxidants present in VOA samples can cause degradation of certain volatile analytes (e.g., styrene).

Perform the following for *Pre-Preserved* Vials:

1. Pour the sample slowly down the edge of the sample vial to avoid excess aeration or agitation of the sample during filling.
2. Fill the vial completely so that a reverse (convex) meniscus is present and ensure that there are no air bubbles present (either in the body or especially at the top of the vial).
3. Place the septum on the vial so that the PTFE side is in contact with the sample, and then firmly tighten the cap.
4. Gently flip the vial a few times to ensure that the sample is mixed with the acid preservative.
5. While holding the vial upright, gently tap the sample to check for air bubbles (either in the body or especially at the top of the vial).
6. If air bubbles are present, discard the sample and select a new vial in which to recollect a new sample. Repeat Steps 1 - 5 above.
7. Do NOT mix or composite samples for VOAs.
8. Cool sample to a temperature of 4°C (±2°C). Samplers should begin the cooling process in the field as samples are being collected. Double-bagged ice should be used. DO NOT FREEZE WATER SAMPLES.
9. Immediately transfer the vial to the sample shuttle (device that contains a "set" of VOA vials) once it has been collected. Do NOT allow ice to touch the vials.

Perform the Following for *Empty* Vials:

1. Rinse the vial with sample water prior to actual sample collection and preservation.

Regions vary in their approach to pre-rinsing and/or re-using sample vials (e.g., some Regions do not recommend pre-rinsing and/or re-use of pre-cleaned containers using sample water). Be sure to follow Regional guidance.

2. Add 1-2 mL of acid preservative to the vial. Check to ensure that the sample you are collecting requires a preservative (follow Regional guidance).
3. Pour the sample slowly down the edge of the sample vial to avoid excess aeration and agitation of the sample.
4. Fill the vial completely so that a reverse (convex) meniscus is present and ensure that there are no air bubbles present (either in the body or especially at the top of the vial).
5. Place the septum on the vial so that the PTFE side is in contact with the sample, and then firmly tighten the cap.
6. Gently flip the vial a few times to ensure that the sample is mixed with the acid preservative.
7. While holding the vial upright, gently tap the vial to check for air bubbles (either in the body or especially at the top of the vial).
8. If air bubbles are present, discard the sample and recollect a new sample using the same sample vial. Repeat Steps 1 - 7 above.
9. Check the recollected sample for air bubbles. If air bubbles are present, additional sample water may be added to the vial to eliminate air bubbles. If there are air bubbles after three consecutive attempts to eliminate air bubbles by the addition of sample water, the entire sample and sample vial should be discarded and a new sample collected.
10. Do NOT mix or composite samples for VOAs.
11. Cool sample to a temperature of 4°C (±2°C). Samplers should begin the cooling process in the field as samples are being collected. Double-bagged ice should be used. DO NOT FREEZE WATER SAMPLES.
12. Immediately transfer the vial to the sample shuttle (device which contains a "set" of VOA vials) once it has been collected. Do NOT allow ice to touch the vials.

Things to Remember:

- Samples must be shipped as soon as possible, preferably on the same day as sample collection to avoid exceeding sample holding times. If overnight transit is not possible, samples should be maintained at 2 - 4°C until they are shipped to the laboratory.
- If samples are not preserved (a requirement for certain analytes), the technical holding time is shortened to 7 days.

Appendix D: Sampling Techniques and Considerations

During a sampling event, the sampler is expected to follow prescribed sampling techniques. The sampler should also be aware of any special sampling considerations, contaminant issues, and sample compositing and mixing methods that could affect their sampling efforts.

Note Regional guidance will take precedence over any of the techniques and considerations listed below.

D.1 General Sampling Techniques

Information regarding surface water, sediment, soil, and groundwater sampling can be found in many documents including, but not limited to, the following sources:

- Compendium of ERT Surface Water and Sediment Sampling Procedures, EPA/540/P-91/005;
- Compendium of ERT Soil Sampling and Surface Geophysics Procedures, EPA/540/P-91/006;
- Compendium of ERT Groundwater Sampling Procedures, EPA/540/P-91/007;
- Quality Assurance Sampling Plan for Environmental Response (QASPER) software, Version 4.1, ERT; and
- *Requirements for the Preparation of Sampling and Analysis Plans*; United States Army Corps of Engineers, February 1, 2001, EM 200-1-3.

When working with potentially hazardous materials, samplers should follow USEPA and OSHA requirements, specific health and safety procedures, and DOT requirements.

D.2 Special Sampling Considerations

Samplers should refer to Regionally-developed SOPs to obtain specific procedures for properly collecting and preserving samples in the field. For additional guidance regarding sampling for VOAs in soil and water, see Appendices B and C. Samplers should obtain Regional guidance when testing and ameliorating for:

- Carbonates in VOA soil and water;
- Residual chlorine in VOA soil and water, or cyanide water;
- Oxidants in VOA soil and water; or
- Sulfides in cyanide.

D.3 Contaminant Sampling

Certain compounds can be detected in the parts-per-billion (ppb) and/or parts-per-trillion (ppt) range. Extreme care MUST be taken to prevent cross-contamination of these samples. The following precautions should be taken when trace contaminants are a concern:

- Disposable gloves should be worn each time a different location is sampled.
- When collecting both surface water and sediments, surface water samples should be collected first. This reduces the chance of sediment dispersal into surface water, and the resulting loss of surface water sample integrity.
- Sampling should occur in a progression from the least to the most contaminated area, if this information is known to the sampling team.
- Samplers should use equipment constructed of PTFE, stainless steel, or glass that has been properly pre-cleaned for collection of samples for trace organic and/or inorganic analyses. Equipment constructed of plastic or polyvinyl chloride (PVC) should NOT be used to collect samples for trace organic compound analyses.
- Equipment constructed of stainless steel should NOT be used to collect samples for trace metals analysis.

D.4 Sample Compositing

Sample compositing is a site-specific activity that must be conducted according to the SAP. Compositing is typically used for large sites under investigation to improve the precision (i.e., lower the variance) of the estimated average contaminant concentrations. **Samples for VOA analysis should NOT be composited to minimize loss of VOAs/analytes.**

Composite samples consist of a series of discrete grab samples that are mixed together to characterize the average composition of a given material. The discrete samples are usually of equal volume, but may be weighted to reflect an increased flow or volume. Regardless, all discrete samples must be collected in an identical manner and the number of grab samples forming a composite should be consistent. There are several compositing techniques that may be required such as:

- Flow-proportioned – Collected proportional to the flow rate during the compositing period by either a time-varying/constant volume or a time-constant/varying volume method. This technique is usually associated with wastewater or storm water runoff sampling.
- Time – Composed of a varying number of discrete samples collected at equal time intervals during the compositing period. This technique is typically used to sample wastewater and streams, and in some air sampling applications.
- Areal – Collected from individual grab samples collected in an area or on a cross-sectional basis. Areal composites are comprised of equal volumes of grab samples where all grabs are collected in an identical manner. This technique is typically used for estimating average contaminant concentrations in soils or sediments. This technique is useful when contaminants are present in nugget form (i.e., TNT chunks, lead shot, etc.), thus exhibiting large differences in concentration over a small sample area.
- Vertical – Collected from individual grab samples but taken from a vertical cross section. Vertical composites are comprised of equal volumes of grab samples where all grab samples are collected in an identical manner. Examples would include vertical profiles of a soil borehole or sediment columns.
- Volume – Collected from discrete samples whose aliquot volumes are proportional to the volume of sampled material. Volume composites are usually associated with hazardous waste bulking operations where the sample represents combined or bulked waste.

When compositing solid samples (i.e., sediment, soil, or sludge) for analysis of compounds present in trace quantities, use a stainless steel or PTFE bowl and spatula.

D.5 Sample Mixing and Homogenizing

Mixing of the sample for the remaining parameters is necessary to create a representative sample media. It is extremely important that solid samples be mixed as thoroughly as possible to ensure that the sample is as representative as possible of the sample location. Please refer to the project-specific SAP regarding instructions on removal of any extraneous materials (e.g., leaves, sticks, rocks, etc.). The mixing technique will depend on the physical characteristics of the solid material (e.g., particle size, moisture content, etc.). The mixing container should be large enough to hold the sample volume and accommodate the procedures without spilling. Both the mixing container (generally a bowl or tray) and the mixing implement should be properly decontaminated before use. Samples should be homogenized according to procedures listed in the project-specific SAP.

Samples for VOA analysis should not be mixed to minimize loss of volatile analytes.

Table D-1 provides a short procedure for mixing a soil sample with a small particle size (less than 1/4 in) and filling sample containers in the field.

Table D-1. Mixing a Sample and Filling Sample Containers

Step	Action
1	Roll the contents of the compositing container to the middle of the container and mix.
2	Quarter the sample and move to the sides of the container.
3	Mix each quarter individually, then combine and mix OPPOSITE quarters, then roll to the middle of the container.
4	Mix the sample once more, and then quarter the sample again.
5	Mix each quarter individually, then combine and mix ADJACENT corners, then roll to the middle of the container. The goal is to achieve a consistent physical appearance before sample containers are filled.
6	Flatten piled material into an oblong shape.
7	Using a flat-bottomed scoop, collect a strip of soil across the entire width of the short axis and place it into a sample container.
8	Repeat Step 7 at evenly-spaced intervals until the sample containers are filled.
9	Record the approximate quantity of each subsample in the field log book.

Appendix E: Sampling Checklists

Appendix E-1: Personnel Preparation Checklist

(Page 1 of 1)

Personnel Briefing	Yes	No	Comments:
1. Did you review sampling team responsibilities and identify individual(s) responsible for corrective actions?			
2. Did you ensure that you have met the appropriate personal safety and protection requirements?			
3. Did you identify sampling locations and receive permission to access them, as appropriate?			
4. Did you contact the appropriate utility companies PRIOR to the start of sampling? Note: By law, utility companies must be contacted prior to the start of digging/sampling so that any underground utilities (gas lines, water lines, electrical lines, etc.) can be marked. A list of one-call centers for each state may be found at: http://www.digsafely.com/contacts.htm.			
5. If sampling on private property, do you have sample receipts to provide to the property owner for all samples taken and removed from the property?			
6. Have you determined the number and type of samples to be collected?			
7. Did you review sample collection methods?			
8. Have you reviewed sample container requirements?			
9. Did you review decontamination requirements, procedures, and locations?			
10. Did you determine holding times and conditions?			
11. Did you determine Performance Evaluation (PE) and Quality Control (QC) sample requirements?			
12. Have you obtained shipping cooler temperature blanks, if required?			
13. Did you review sample label and tag requirements?			
14. Did you review Traffic Report/Chain of Custody (TR/COC) Record and custody seal requirements?			
15. Have you obtained the laboratory name, shipping addresses, and telephone number?			
16. Did you review cooler return instructions?			
17. Have you obtained shipping company information (name, telephone number, account number, pickup schedule)?			
18. Have you obtained shipping schedules?			
19. Did you review shipment reporting requirements and the appropriate contact names and telephone numbers for reporting?			
20. Have you included any sampler comments regarding sampling issues (e.g., low volumes, matrix, suspected concentrations based on field measurements)?			

Appendix E-2: General Sample Collection Checklist

(Page 1 of 1)

General Sample Collection	Yes	No	Comments:
1. Did you identify and mark the sampling location with buoys, flags, or stakes according to the sampling plans, maps, and grids?			
2. If the sampling location is inaccessible, did you contact the appropriate field or Regional personnel for instructions?			
3. Did you use the correct sampling equipment?			
4. Did you follow the correct decontamination procedures?			
5. Did you follow the correct collection procedures?			
6. Did you use the correct sample containers for each sample collected?			
7. Did you collect the correct volume for each sample?			
8. Did you collect the correct type of sample, including primary samples and Quality Control (QC) samples?			
9. Did you properly preserve each sample collected?			
10. Did you correctly document and label each sample with all necessary information? Under no circumstances should the site name appear on any documentation being sent to the laboratory.			
11. If sampling on private property, did you provide a sample receipt to the owner of the property for all samples taken and removed from the property?			

Appendix E-3: Completing Field Logbook Checklist

(Page 1 of 1)

Completing Field Logbook	Yes	No	Comments:
1. Did you use waterproof ink when writing in the field logbook?			
2. Did you document sampling project information such as: • Project name, ID, and location; • Names of samplers; • Geological observations, including maps; • Atmospheric conditions; • Field measurements; and • Sampling dates, times, and locations? Under no circumstances should the site name appear on any documentation being sent to the laboratory.			
3. Did you record sampling activity information such as: • Sampling dates and times; • Sample identifications; • Sample matrices; • Sample descriptions (e.g., odors and/or colors); • Number of samples taken; • Sampling methods/equipment; and • Description of QC samples?			
4. Did you document any and all deviations from the sampling plan?			
5. Did you document any and all difficulties in sampling and/or any unusual circumstances?			
6. Were all errors corrected by crossing a line through the error, initialing the error, dating the error, and then adding the correct information?			

Appendix E-4: Completing Handwritten Sample Labels Checklist

(Page 1 of 1)

Completing Handwritten Sample Labels	Yes	No	Comments:
1. Did the Region provide CLP Sample Numbers and SMO-assigned Case Numbers?			
2. If additional CLP Sample Numbers were needed, did you contact the appropriate Regional personnel?			
3. Were the CLP Sample Numbers and SMO-assigned Case Numbers on the labels correct? Organic CLP Sample Numbers begin with the Regional letter code, followed by letters and numbers. Inorganic CLP Sample Numbers begin with "M", followed by the Regional letter code, and then letters and numbers. Note: The following characters are not used in generating CLP Sample Numbers and should never appear on any paperwork send to the laboratory: I; O; U; and V. Also, the last character of a CLP Sample Number will never be a letter.			
4. Were samples uniquely numbered and designated to only one sample? Note: Samples collected for total metal and dissolved metal analyses must receive separate, unique, CLP Sample Numbers.			
5. Were Quality Control (QC) samples numbered accordingly?			
6. Were the specific requirements followed for total and dissolved metals analysis, QC and Performance Evaluation (PE) samples, and SW-846 Method 5035A?			
7. Were all temperature blanks labeled with "TEMPERATURE BLANK"?			
8. Was a sample label containing the CLP Sample Number, SMO-assigned Case Number, location, concentration, preservative, and the fraction/analysis, attached to each sample bottle or container as the sample was collected? Under no circumstances should the site name appear on any documentation being sent to the laboratory.			
9. Was clear tape placed over the sample labels to protect the labels from moisture and to help the labels adhere to the sample bottle?			
10. Were all errors corrected by crossing a line through the error, initialing the error, dating the error, and then adding the correct information?			

Appendix E-5: Completing Handwritten Sample Tags & Custody Seals Checklists

(Page 1 of 1)

Completing Handwritten Sample Tags	Yes	No	Comments:
1. Was waterproof ink used on the sample tags?			
2. If Regionally required for individual sample containers, was the project code on the sample tag completed?			
3. Was the station number on the sample tag completed?			
4 Was the date filled in using the format MM/DD/YYYY?			
5. Was the time of sample collection indicated in military time format HH:MM?			
6. Was the box checked indicating composite or grab sample?			
7. Was the station location on the sample tag completed?			
8. Did you indicate whether or not the sample was preserved by checking "yes" or "no?"			
9. Was the appropriate analysis indicated on the sample tag?			
10. Were the appropriate CLP Sample Number and SMO-assigned Case Number indicated and cross-referenced with the numbers on the sample label?			
11. Did you sign the sample tags?			
12 Did you attach the sample tag to the neck of the sample bottle with striang, stretch string, or wire (recommended method)? Do **NOT** use wire to attach a sample tag to a metal sample.			
13. Were all errors corrected by crossing a line through the error, initialing the error, dating the error, and then adding the correct information?			

Completing Custody Seals	Yes	No	Comments:
1. Did you sign and date the custody seal?			
2. Did you attach a completed custody seal to the sample bottle, container, or plastic bag, placing the seal over the cap or lid of each sample bottle or container or on the bag opening such that it will be broken if the sample bottle, container, or bag is opened or tampered with?			
3. As appropriate, did you attach the completed custody seal to the sample shipping container or cooler, placing the seal such that it will be broken if the container or cooler is opened or tampered with?			
4. Were all errors corrected by crossing a line through the error, initialing the error, dating the error, and then adding the correct information?			

Appendix E-6: Packing Sample Container Checklist

(Page 1 of 1)

Packing Sample Container	Yes	No	Comments:
1. Did you follow all State, Federal, Department of Transportation (DOT), and International Air Transportation Association (IATA) regulations governing the packaging of environmental and hazardous samples? Note: If samples contain methanol preservation (e.g., samples to be analyzed by SW-846 Method 5035A), refer to the packaging instructions in Appendix A.			
2. Were all CLP Sample Numbers, SMO-assigned Case Numbers, fractions/analyses, labels, tags, and custody seals attached to the correct sample containers?			
3. Was an inventory conducted of CLP Sample Numbers, SMO-assigned Case Numbers, fractions/analyses, and containers, and verified against the TR/COC Records?			
4. Were the correct number and type of Performance Evaluation (PE) and Quality Control (QC) samples collected?			
5. Were all sample containers sealed in clear plastic bags with the sample label and tag visible through the packaging?			
6. Were all soil/sediment samples known to contain dioxin securely enclosed in metal cans (e.g., paint cans) with the lids sealed?			
7. Was suitable absorbent packing material placed around the sample bottles or containers?			
8. Were the outsides of metal containers labeled properly with the CLP Sample Number, SMO-assigned Case Number, and the fraction/analysis of the sample inside?			

Appendix E-7: Packing Shipping Container Checklist

(Page 1 of 1)

Packing Shipping Container	Yes	No	Comments:
1. Were you shipping samples in a clean waterproof metal or hard plastic ice chest or cooler in good condition?			
2. Were all non-applicable labels from previous shipments removed from the container?			
3. Were all inside and outside drain plugs closed and covered with suitable tape (e.g., duct tape)?			
4. Was the inside of the cooler lined with plastic (e.g., large heavy-duty garbage bag)?			
5. Was the lined shipping cooler packed with noncombustible absorbent packing material?			
6. Were sample containers placed in the cooler in an upright position not touching one another?			
7. Was a sample shipping cooler temperature blank included in the cooler?			
8. Did the documentation in the cooler only address the samples in that cooler?			
9. Was the site name absent from all documentation? Under no circumstances should the site name appear on any documentation being sent to the laboratory.			
10. Was there sufficient packing material around and in between the sample bottles and cans to avoid breakage during transport?			
11. If required, was double-bagged ice placed on top and around sample bottles to keep the samples cold at 4°C (± 2° C)? Note: Do Not Pack Loose Ice Into the Cooler!			
12. Was the top of the plastic liner fastened and secured with tape?			
13. Was a completed custody seal placed around the top of the fastened plastic liner (if required by the Region)?			
14. Were all sample documents enclosed within the cooler (e.g., TR/COC Record and cooler return instructions) in a waterproof plastic bag?			
15. Was the plastic bag, containing the documentation, taped to the underside of the cooler lid?			
16. Were cooler return instructions and airbills, if required, taped to the underside of the cooler lid?			
17. Was the return address of the cooler written with permanent ink on the underside of the cooler lid?			
18. Was tape placed around the outside of the entire cooler and over the hinges?			
19. Were the completed custody seals placed over the top edge of the cooler so the cooler cannot be opened without breaking the seals?			
20. Was the return address label attached to the top left corner of the cooler lid?			
21. Were instructional labels attached to the top of the cooler, as necessary (e.g., "This End Up," "Do Not Tamper With," or "Environmental Laboratory Samples")?			
22. If shipping hazardous samples, were the correct labels attached to the cooler (e.g., "Flammable Liquids", "Caution", or "Poison")?			
23. If shipping samples containing methanol as a preservative (e.g., samples to be analyzed by SW-846 Method 5035A), was a label used to indicate methanol, the United Nations (UN) identification number for methanol (UN 1230), and Limited Quantity?			

Appendix E-8: Shipping & Reporting CLP Samples Checklist

(Page 1 of 1)

Shipping CLP Samples	Yes	No	Comments:
1. Did you follow all State, Federal, Department of Transportation (DOT), and International Air Transportation Association (IATA) regulations governing the shipment of environmental and hazardous samples?			
2. Was a separate airbill filled out for each cooler being shipped?			
3. Was the airbill filled out completely, including correct laboratory name, address, and telephone number, identification of recipient as "Sample Custodian," and appropriate delivery option (e.g., overnight or Saturday)?			
4. Was the completed airbill attached to the top of the cooler with the correct laboratory address?			
5. If more than one cooler was being shipped to the same laboratory, were they marked as "1 of 2," "2 of 2," etc.?			
6. Were the samples being shipped "overnight" through a qualified commercial carrier?			
Reporting CLP Samples	**Yes**	**No**	**Comments:**
1. Did you contact the Contract Laboratory Program Sample Management Office (SMO) on the same day samples were shipped?			
2. If the samples were shipped after 5:00 PM Eastern Time (ET), were they reported to the RSCC (or designee) or to SMO by 8:00 AM ET the following business day?			
3. Did you notify the RSCC (or designee) or SMO so that SMO will receive the delivery information by 3:00 PM ET on Friday for sample shipments that will be delivered to the laboratory on Saturday?			
4. Did you provide the RSCC (or designee) or SMO with: • Your name, phone number, and Region number; • Case Number of the project; • Exact number of samples, matrix(ces), concentration(s), and type of analysis; • Laboratory(ies) to which the samples were shipped; • Carrier name and airbill number; • Date of shipment; • Date of next shipment; and • Any other information pertinent to the shipment?			

Appendix F: Glossary

Analyte -- The element, compound, or ion that is determined in an analytical procedure; the substance or chemical constituent of interest.

Analytical Services Branch (ASB) -- Directs the Contract Laboratory Program (CLP) from within the United States Environmental Protection Agency's (USEPA's) Office of Superfund Remediation and Technology Innovation (OSRTI) in the Office of Solid Waste and Emergency Response (OSWER).

Aroclor -- Polychlorinated biphenyls (PCBs) or a class of organic compounds with 1 to 10 chlorine atoms attached to biphenyl and a general chemical formula of $C_{12}H_{10-x}Cl_x$. PCBs, commercially produced as complex mixtures containing multiple isomers at different degrees of chlorination, were marketed in North America under the trade name Aroclor.

Case -- A finite, usually predetermined, number of samples collected over a given time period from a particular site. Case Numbers are assigned by the Sample Management Office (SMO). A Case consists of one or more Sample Delivery Groups (SDGs).

Comprehensive Environmental Response, Compensation, and Liability Act (CERCLA) -- Initiated in December 1980, CERCLA provided broad federal authority to respond directly to the release or possible release or hazardous substances that may endanger human health or the environment. CERCLA also established a trust fund to provide for cleanup when no responsible party could be identified; hence CERCLA is commonly referred to as "Superfund".

Contract Laboratory Program (CLP) -- A national program of commercial laboratories under contract to support the USEPA's nationwide efforts to clean up designated hazardous waste sites by providing a range of chemical analytical services to produce environmental data of known and documented quality. This program is directed by USEPA's Analytical Services Branch (ASB).

Contract Laboratory Program Project Officer (CLP PO) -- Monitors technical performance of the contract laboratories in each Region.

Contract Laboratory Program Sample Management Office (CLP SMO) -- A contractor-operated facility operated under the CLP, awarded and administered by the USEPA, which provides necessary management, operations, and administrative support to the CLP. SMO coordinates and schedules sample analyses, tracks sample shipments and analyses, receives and tracks data for completeness and compliance, and processes laboratory invoices.

Custody Seal -- An adhesive label or tape that is used to seal a sample bottle or container that maintains chain-of-custody and that will break if the sample bottle or container is opened or tampered with.

Cyanide (Total) -- Cyanide ion and complex cyanides converted to hydrocyanic acid (HCN) by reaction in a reflux system of a mineral acid in the presence of magnesium ion.

Data Quality Objective (DQO) -- The requirements established to maintain the quality of the data being collected.

Data Validation -- Data validation is based on Region-defined criteria and limits, professional judgment of the data validator, and (if available) the Quality Assurance Project Plan (QAPP) and Sampling and Analysis Plan (SAP).

Equipment Blank -- A sample used to check field decontamination procedures. See Field Blank.

Field Blank -- Any blank sample that is submitted from the field. Each field blank is assigned its own unique USEPA Sample Number. A Field Blank checks for cross-contamination during sample collection, sample shipment, and in the laboratory. A field blank includes trip blanks, rinsates, equipment blanks, etc.

Field Duplicate -- Checks reproducibility of laboratory and field procedures and indicates non-homogeneity.

Field Operations Reporting Management System (FORMS) II Lite -- A stand-alone, Windows-based software application that enables samplers to automatically create and generate sample documentation both prior to and during a sampling event.

Field QC Sample -- Used to detect for contamination or error in the field.

Field Sample -- Primary sample material taken out in the field from which other samples, such as duplicates or split samples are derived. A field sample can be prepared in the field and sent for analysis in one or multiple containers, and is identified by a unique EPA Sample Number.

Field Sampling Plan (FSP) -- Developed to outline the actual steps and requirements pertaining to a particular sampling event, and explains, in detail, each component of the event to all involved samplers.

Holding Time -- The elapsed time expressed in hours, days, or months from the date of collection of the sample until the date of its analysis.

> **Contractual** -- The lengths of time that the CLP laboratory must follow to comply with the terms of the contract, and are described in the CLP analytical services Statements of Work (SOWs).
>
> **Technical** -- The maximum lengths of time that samples may be held from time of collection to time of preparation and/or analysis and still be considered valid.

Laboratory Blank -- See Method Blank.

Laboratory Duplicate -- A sample required by the laboratory's contract to check the precision of inorganic analyses.

Laboratory QC Sample -- An additional volume of an existing sample, as required by the laboratory's contract, used to detect contamination or error in the laboratory's practices.

Matrix -- The predominant material of which a sample to be analyzed is composed.

Matrix Spike (MS) -- Sample required by the laboratory's contract to check the accuracy of organic and inorganic analyses. It is an aliquot of a sample (water or soil) that is fortified (spiked) with known quantities of a specific compound and subjected to the entire analytical procedure. See Matrix Spike Duplicate.

Matrix Spike Duplicate (MSD) -- Sample required by the laboratory's contract to check the accuracy and precision of organic analyses. It is a second aliquot of the same matrix as the Matrix Spike (MS) that is spiked to determine the precision of the method. See Matrix Spike.

Method Blank -- An analytical control consisting of all reagents, internal standards and surrogate standards [or System Monitoring Compounds (SMCs) for volatile organic analysis], that is carried throughout the entire analytical procedure. The method blank is used to define the level of laboratory, background, and reagent contamination, also referred to as laboratory blank when defining the level of laboratory contamination.

Performance Evaluation (PE) Sample -- A sample of known composition provided by the USEPA for contractor analysis. Used by USEPA to evaluate contractor performance.

Pesticides -- Substances intended to repel, kill, or control any species designated a "pest", including weeds, insects, rodents, fungi, bacteria, and other organisms. Under the CLP, only organochlorine pesticides are analyzed (e.g., DDT, Dieldrin, Endrin, etc.).

Polychlorinated Biphenyls (PCBs) -- A group of toxic, persistent chemicals used in electrical transformers and capacitors for insulating purposes, and in gas pipeline systems as a lubricant. The sale and new use of PCBs were banned by law in 1979.

Quality Assurance (QA) -- An integrated system of management activities involving planning, implementation, assessment, reporting, and quality improvement to ensure that a process, item, or service is of the type and quality needed and expected by the customer.

Quality Assurance Project Plan (QAPP) -- Document written to meet requirements outlined in the document *EPA Guidance for Quality Assurance Project Plans* (EPA QA/R-5). Prepared in advance of field activities and used by samplers to develop any subsequent plans such as the Sampling Analysis Plan (SAP) or the Field Sampling Plan (FSP).

Quality Control (QC) -- The overall system of technical activities that measures the attributes and performance of a process, item, or service against defined standards to verify that they meet the stated requirements established by the customer; operational techniques and activities that are used to fulfill requirements for quality.

Regional Sample Control Center (RSCC) Coordinator -- In most Regions, coordinates sampling efforts and serves as the central point-of-contact for sampling questions and problems. Also assists in coordinating the level of Regional sampling activities to correspond with the monthly projected demand for analytical services.

Regional Site Manager -- Coordinates the development of data quality objectives and oversees project-specific remedial or removal contractors, State officials, or private parties conducting site sampling efforts.

Rinse Blank -- A sample used to check decontamination procedures. Also see Field Blank.

Routine Analytical Service (RAS) -- The standard inorganic and organic analyses available through the CLP.

Sample -- A discrete portion of material to be analyzed that is contained in single or multiple containers, and identified by a unique Sample Number.

Sample Delivery Group (SDG) – A unit within a sample Case that is used to identify a group of samples for delivery. An SDG is defined by the following, whichever is most frequent:

- Each Case of field samples received; or
- Each 20 field samples (excluding PE samples) within a Case; or
- Each 7 calendar day period (3 calendar day period for 7-day turnaround) during which field samples in a Case are received (said period beginning with the receipt of the first sample in the SDG).

In addition, all samples and/or sample fractions assigned to an SDG must have been scheduled under the same contractual turnaround time. Preliminary Results have no impact on defining the SDG. Sample may be assigned to SDGs by matrix (e.g., all soil samples in one SDG, all water samples in another) at the discretion of the laboratory.

Sample Label -- An identification label attached to a sample bottle or container to identify the sample.

Sample Number -- A unique number used to identify and track a sample. This number can be recorded on a sample label or written on the sample bottle or container using indelible ink.

Sample Tag -- A tag attached to a sample that identifies the sample and maintains chain-of-custody.

Sampling Analysis Plan (SAP) -- A document that explains how samples are to be collected and analyzed for a particular sampling event.

Semivolatile Organic Analyte (SVOA) -- A compound amenable to analysis by extraction of the sample using an organic solvent.

Statement of Work (SOW) -- A document that specifies how laboratories analyze samples under a particular Contract Laboratory Program (CLP) analytical program.

Superfund -- The program operated under the legislative authority of the Comprehensive Environmental Response, Compensation, and Liability Act (CERCLA) and Superfund Amendments and Reauthorization Act (SARA) that funds and carries out USEPA removal and remedial activities at hazardous waste sites. These activities include establishing the National Priorities List (NPL), investigating sites for inclusion on the list, determining their priority, and conducting and/or supervising cleanup and other remedial actions.

Superfund Amendments and Reauthorization Act (SARA) -- The 1986 amendment to the Comprehensive Environmental Response, Compensation, and Liability Act (CERCLA).

Traffic Report/Chain of Custody (TR/COC) Record -- A record that is functionally similar to a packing slip that accompanies a shipment of goods. Used as physical evidence of sample custody and functions as a permanent record for each sample collected.

Trip Blank -- A sample used to check for contamination during sample handling and shipment from field to laboratory. Also see Field Blank.

Volatile Organic Analyte (VOA) -- A compound amenable to analysis by the purge-and-trap technique. Used synonymously with the term purgeable compound.

THIS PAGE INTENTIONALLY LEFT BLANK