RECEIVED
OPPT CBIC

95 OCT 12 AM 11:23

8EHQ-1095-13528

Bayer Corporation
100 Bayer Road
Pittsburgh, PA 15205-9741
Phone: 412/777-2000

8EHQ-95-13528
INIT 10/12/95

ORIGINAL
Contains No CBI

October 6, 1995

Document Processing Center (TS-790)
ATTN: Section 8(e) Coordinator
Office of Toxic Substances
U.S. Environmental Protection Agency
401 M Street, SW
Washington, DC 20460

Dear Sir:

Bayer Corporation is submitting a report recently received from our parent company Bayer AG for A Study on Acute Inhalation Toxicity in Rats According to OECD No. 403, Duration of Exposure Four Hours, with Desmodur 15 (Naphthalene, 1,5-diisocyanato) CAS# 3173-72-6. This report was also submitted under Section 8(d).

In this study, groups of five Wistar rats/sex/concentration were exposed for a four hour period to solid aerosols (dusts) of the test material using concentrations ranging from 0 (air control) to 541 mg/M3 air (gavimetric determination). Concentrations of 189 mg/M3 or less were tolerated without mortality. Exposures to concentrations of 96 mg/M3 and higher induced clinical signs of toxicity indicative of irritation to the respiratory tract. Some of these signs lasted upward of 11 days post exposure. The resultant LC50 value for this study was calculated to be 270 mg/M3 air for combined sexes.

RECEIVED
OPPT NCIC
95 OCT 20 PM 12:06

According to the EPA TSCA Reporting Guidance Document these acute toxicity results should be submitted under 8(e).

Appropriate information from this study will be included in our hazard communication literature and worker training programs.

88960000008

Please contact me if you have any questions.

Sincerely,

Donald W Lamb

Donald W. Lamb, Ph.D.
Vice President
Product Safety & Regulatory Affairs
412-777-7431

95-2-22.doc:vmk
Attachment
Certified Mail: P 921 654 938

22. 9. 95

BAYER AG
DEPARTMENT OF TOXICOLOGY
FRIEDRICH-EBERT-STR. 217-333
D - 42096 WUPPERTAL

Report-No.: 24206

Date: 27.07.1995

Contains No CBI

BAYER AG

FILE
7769

DESMODUR 15

STUDY ON ACUTE INHALATION TOXICITY IN RATS ACCORDING TO OECD No. 403 (Duration of Exposure: four hours)

BAYER AG

by

Dr. J. Pauluhn

Study No.: T8059022

BAYER AG

As long as the results contained in this report have not been published, they may be used only with the consent of Bayer AG. Further reproduction of this report, in whole or in part, is not permitted.

24.06.95 13:56

This page is intentionally left blank for the purpose of submitting administrative information that is required by regulations promulgated by various countries.

BAYER AG
BAYER AG
BAYER AG
BAYER AG

GOOD LABORATORY PRACTICE COMPLIANCE STATEMENT

This study conforms to the OECD Principles of Good Laboratory Practice (GLP) and to the Principles of Good Laboratory Practice (GLP) according to Appendix 1 ChemG (Bundesgesetzblatt [federal laws gazette] Part I, July 29, 1994) except the following deviation: This report was not audited by QAU.

Dr. J. Pauluhn D.A.B.T.
Board Approved Toxicologist (DGPT)
Study Director

Date: June 28, 1995

SPONSOR:
BAYER AG

Prof. Dr. E. Löser
Head of Institute

Date: 10. Juli 1995

BAYER AG

1. TABLE OF CONTENTS

GOOD LABORATORY PRACTICE COMPLIANCE STATEMENT 3

1. TABLE OF CONTENTS 4

2. QUALITY ASSURANCE DECLARATION 6

3. SIGNATURES 7

4. SUMMARY 8

5. INTRODUCTION 9

6. RESPONSIBILITIES 10

7. MATERIALS AND METHODS 11
   - 7.1 Test substance 11
   - 7.2 Test system and housing of animals 12
   - 7.3 Test guidelines 14
   - 7.4 Exposure conditions 14
   - 7.5 Aerosol generation and exposure technique 14
   - 7.6 Inhalation chamber temperature and humidity 16
   - 7.7 Analysis of the test atmosphere (aerosol) 16
   - 7.8 Characterization of aerodynamic particle size distribution 17
   - 7.9 Collection efficiency 19
   - 7.10 Stability of the test atmosphere 20
   - 7.11 Number of animals per group 20
   - 7.12 Control animals 20
   - 7.13 Body weights and duration of observation period 21
   - 7.14 Clinical signs 21
   - 7.15 Rectal temperatures 21
   - 7.16 Necropsy 21
   - 7.17 Statistical evaluation of data 22
   - 7.18 Programming and validating software 23
   - 7.19 Archiving of raw data and report 23

BAYER AG

8. RESULTS 24
8.1 Generation and characterization of atmosphere 24
8.2 Toxicological results 25

9. EVALUATION AND DISCUSSION 28

10. KEY TO ABBREVIATIONS 29

11. REFERENCES 30

12. APPENDIX 33
Atmosphere characterization 33
Characterization of particle size distribution 34
Monitoring 46
Signs-incidence tables 48
Examination of reflexes 117
Body weights 118
Rectal temperature 150
Gross pathology report 160
Chow specification 165
Tap water specification 167
Analytical report 168

END OF REPORT 176

BAYER AG

2. QUALITY ASSURANCE DECLARATION

Declaration

Study No.: T8059022

Test Substance: DESMODUR 15

The study was checked by Quality Assurance on the dates stated below. The results of the checks and inspections have been communicated in writing to the study director and, if necessary, to the Head of the Institute or other relevant persons.

Dates of checks/Dates of submission of inspection reports:

Dec. 06, 1994 (study plan)	Dec. 06, 1994
Dec. 12, 1994	Dec. 12, 1994
Dec. 14, 1994	Dec. 14, 1994

This report was not audited by QAU.

Quality Assurance
PH-AR-S/GLP, Bayer AG

Date: May 27, 1995 Signed: R. Rauchschwalbe
Dr. R. Rauchschwalbe

3. SIGNATURES

Study Director: _____ Dr. J. Pauluhn Date: June 28, 1995

Analytical Chemistry: _____ Dr. W. Rüngeler Date: June 29, 95

Institute Head: _____ Prof. E. Löser Date: 20. Juli 1995

BAYER AG
BAYER AG
BAYER AG

4. SUMMARY

A study on the acute inhalation toxicity of DESMODUR 15 (hereafter referred to as *test substance)* in rats has been conducted in accordance with OECD Guideline No. 403. Groups of rats were exposed to a solid aerosol (dust) to concentration ranging from 96 to 541 mg/m³ air. The duration of exposure was four hours. To accommodate for delayed mortality, a common finding in isocyanate exposed rats, to postexposure period was 4 weeks. Attempts were made so that aerosol generated was respirable to rats (MMAD 3-4 µm, GSD approx. 1.6). Prior to use of the product it was micronized to maximize the respirability of particles. The results can be summarized as follows:

LC_{50} inhalation (aerosol, 4 hrs):
Males & females combined: 270 mg/m³ air[1)]
95% confidence interval: 217 - 337 mg/m³ air
NOEL: < 96 mg/m³ air

Observations and Measurements
Aerosol (dust) concentrations to 238 mg/m³ and above induced test substance related mortality within the first two postexposure days. Exposure to concentrations equal or less than 189 mg/m³ test compound were tolerated without mortality. Necropsy findings support the conclusion that a causal relationship between lethality and lung damage existed. Exposures to concentrations of 96 mg/m³ and higher were followed by concentration-dependent signs suggestive of irritation of the respiratory tract (e.g. bradypnoea, dyspnoea, laboured breathing pattern, rales, nose/snout area with red encrustations, serous discharge from nose, cyanosis, hypothermia) and non-specific signs such as reduced motility, body weight gain, emaciation, and flaccid muscle tone. The duration of signs (maximum duration up to day 11) was dependent on respiratory signs.

Evaluation and Assessment
The aerosolized test substance (dust) was of adequate respirability. Accordingly, mortality appeared to be related to damage of the respiratory tract in general and the lower tract in particular.

BAYER

BAYER

---

1 All concentration data represent gravimetrical concentrations of the test substance in the rats' breathing zone.

5. INTRODUCTION

This acute inhalation toxicity study was conducted in accordance with OECD Guideline No. 403 using DESMODUR 15 as a test substance. The study was performed on rats (nose-only exposure over 4 hours to a solid aerosol, dynamic exposure conditions, 4 week observation period). This study served the purpose of product classification. An additonal study was conducted using a duration of exposure of one hour to comply with internationally recognized transport guidelines. Results of the one hour study has been reported seperately.

The study was conducted at the test facility of the Institute of Occupational/Industrial Toxicology, Department of Toxicology, Bayer AG, D-42096 Wuppertal, Germany.

Study No.: T8059022

Study period: December 12, 1994 - February 13, 1995

BAYER AG
BAYER AG
BAYER AG
BAYER AG

6. RESPONSIBILITIES

Head of Department: ..... Prof. Dr. E. Löser
Study Director: ..... Dr. J. Pauluhn
Test substance supply: ..... M. Jokel
Analytical chemistry/Dept. of Inhalation Toxicology ..... Dr. W. Rüngeler
Analytical characterization/Test compound: ..... Dr. Pfisterer
Central Animal Supply Department: ..... Dr. K. Hoffmann
Air conditioning/air make-up ..... Dipl. Ing. G. Strietholt
Archiving the study data: ..... Prof. G. Schlüter
Quality Assurance: ..... Dr. H. Lehn
Gross pathology: ..... Dr. Rosenbruch

BAYER AG
BAYER AG
BAYER AG

7. MATERIALS AND METHODS

7.1. Test Substance

Test substance:	DESMODUR 15
Synonym:	1,5-Naphylene-diisocyanate
Batch-no.:	5054 (BS 9507)
Purity:	> 99.9
Producer:	Bayer AG, Leverkusen, Germany
Appearance:	white-yellowish powder
Storage:	Room temperature / darkness
CAS-no.:	--
Molecular weight:	211 g/mol
Empirical formula:	$C_{12}H_6O_2N_2$

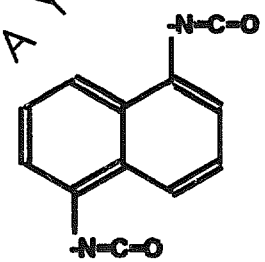

Micronization: The test compound was micronized in a Retsch-stability wasMortar-Mill prior to use (30 min.). The analytical stability of the product was verified by comparison before and after micronization.

BAYER AG

7.2. Test System and Housing of Animals

Species and species justification: The study was carried out in rats, a rodent species recommended in the test guidelines.

Healthy young adult SPF bred Wistar rats, strain Hsd/Win:WU [formerly BOR: WISW (SPF-Cpb)], from the experimental animal breeder Harlan-Winkelmann, Borchen, Germany, were used. Animals of this strain have been used at Bayer AG in toxicological studies for years. Historical data on their physiology, diseases and spontaneous alterations are available. The state of health of the strain is randomly checked regularly at the instance of the Central Animal Supply Department, Bayer AG, for the most important specific infectious pathogens. The results of these examinations are archived.

Acclimatization: The animals were acclimatized to the animal room conditions for at least 5 days before use.

Identification: Animals were identified by both individual color-marking and cage-labels. All animals from this study were located on one cage-rack.

Randomization: Before the start of the study the health status of each animal was assessed. Animals were subsequently assigned to exposure groups at random (randomization procedure is described in section 7.17).

Health status: Only healthy rats free of signs were used for this study. The animals were not vaccinated or treated with anti-infective agents either before their arrival or during the acclimatization or study periods. The females were nulliparous and not pregnant.

Age and weight: At the study start the variation of individual weights did not exceed ± 10 per cent of the mean for each sex (see Appendix). Animals of the weight class used are 2 - 3 months old and hence fulfill the criterion for young adults.

Animal housing: During the acclimatization and study periods the animals were housed singly in conventional Makrolon® Type II cages (based on A. Spiegel and R. Gönnert, Zschr. Versuchstierkunde, 1, 38 (1961) and G. Meister, Zschr. Versuchstierkunde, 7, 144-153 (1965)). Cages and water bottles were changed twice a week while unconsumed feed was changed once per week. The legal requirements for housing experimental animals (86/609 EEC) were followed.

Bedding: Bedding consisted of type S 8/15 low-dust wood granulate from Ssniff, Soest/Westfalen, Germany. The wood granulate was randomly checked for harmful constituents at the request of the Central Animal Supply Department, Bayer AG.

Animal rooms: All animals were housed in a single room. For reasons of space availability rats from other acute toxicity studies were housed in the same room, however mistakes in animal assignments were excluded by adequate spatial separation, clear cage labeling, and appropriate organization of all work procedures. The housing of several studies in one animal room is not considered to be a deviation from current GLP-requirements since many acute studies comprise of 10 animals only (as required to perform a limit test).

Environmental Conditions in the Animal Room

The animal room environment was as follows:

Room temperature:	22 ± 2 °C
Relative humidity:	approximately 50 %
Dark/light cycle:	12 h/12 h; artificial light from 6.00 a.m. to 6.00 p.m. Central European Time
Light intensity:	approximately 14 watt/m² floor area
Ventilation:	approximately 10 air changes per hour

The room humidity and temperature were continuously monitored and documented using a calibrated thermohygrograph. Occasional deviations from these conditions occurred, e.g. as a result of animal room cleaning, but these had no detectable influence on the outcome of this study.

Cleaning, disinfection, and pest control: The animal room was regularly cleaned and disinfected once a week with an aqueous solution of Zephirol®. Contamination of the feed and contact with the test system were excluded. Pest control was not conducted in the animal room.

Feeding: Ration consisted of a standard fixed-formula diet (Altromin® 1324 pellets maintenance diet for rats and mice, Altromin GmbH, Lage) and tap water (drinking bottles). Both food and water were available *ad libitum*. The pelletized feed was contained in a rack in the stainless-steel wire cage cover. The nutritive composition and contaminant content of the standard diet was checked regularly by random sampling by the Central Animal Supply Department, Bayer AG. Details concerning general feed and water specifications are provided in the Appendix.

Water: Drinking quality tap-water (Drinking Water Decree of 05.12.1990, Bundesgesetzblatt [federal law gazette] part I, page 2612) was provided *ad libitum* in polycarbonate bottles containing approximately 300 ml (based on A. Spiegel and R. Gönnert, Zschr. Versuchstierkunde, 1, 38 (1961) and G. Meister, Zschr. Versuchstierkunde, 7, 144-153 (1965)). The results of feed and water analyses are retained by Bayer AG. The available data provided no evidence of an impact on the study objective.

7.3. Test Guidelines

The study described below was carried out in accordance with OECD Guideline No. 403. The study conditions were adjusted so as to fulfill both the EC Guideline 92/69/EEC and the FIFRA § 81-3 (US EPA, 1984) guideline. Other recommendations (US EPA, 1988) were also considered so as to comply with internationally recognized procedures.

7.4. Exposure Conditions

Mode of exposure: Animals were exposed to the aerosolized test substance in Plexiglas exposure tubes applying a *directed-flow* nose-only exposure principle (Moss and Asgharian, 1994). Tubes were chosen that accommodated the animals size. These tubes were designed so that the rat's tail remained outside the tube, thus restrained-induced hyperthermia can be avoided. This type of exposure is preferable to whole-body exposure on scientific (Pauluhn, 1984) and technical reasons (rapid attainment of steady-state concentrations, no problems with regard to test atmosphere inhomogeneities, better capabilities to control all inhalation chamber parameters, easier cleaning of exhaust air, and lower consumption of test substance). Moreover, contamination of the fur can largely be avoided. The chambers used are commercially available (TSE, 61348 Bad Homburg) and the performance of this type of chamber has been published (Pauluhn, 1984; Pauluhn, 1988; Pauluhn, 1994).

Vehicle: The test substance was aerosolized as dust without a carrier or vehicle.

7.5. Aerosol Generation and Exposure Technique

Aerosol generation: Under dynamic conditions the test substance was fed into the intake of the cylindrical inhalation chamber shown in figure 1.

In order to obtain the high concentration of respirable aerosol an EXACTOMAT 4200 (TSE, 61348 Bad Homburg, Germany) was used.

Description of apparatus: For powder dispersion, conditioned compressed air (28 liters of air/min; continuous operation) was used. The principle performance of the dust generating system can be described as follows: The test substance was entrained into a glass reservoir (approximately ½ kg). From this reservoir it was fed (by suction) into the orifice of a venturi tube. The airborne powder was then dispersed into the inner cylinder of the inhalation chamber depicted in Figure 1. Reproducible and temporally stable dosing into the orifice of the venturi tube was achieved by an oscillating orifice. The orifice size was adjusted manually in order to obtain the targeted flow of powder. Stirring of the reservoir was performed using a minimum number of revolutions per unit of time. Thus the flowability of the test compound was maintained without inducing a vertical inhomogeneity of active ingredient particles.

Optimization of respirability: The concentration tested was too high to incorporate a cyclone which is commonly used to increase the efficiency of the generation of respirable particles and prevents larger particles from entering the chamber (Tillery et al., 1976). Previous experience with cyclones have demonstrated that this device could be used effectively up to concentrations of 500 mg/m³ air.

Inhalation Chamber: The aluminum inhalation chamber has the following dimensions: inner diameter = 14 cm, outer diameter = 35 cm (two-chamber system), height = 25 cm (internal volume = about 3.8 l). The construction of the inhalation chamber is shown schematically in Fig. 1. Details of this modular chamber and its validation with regard to spatial homogeneity of material distribution have been published (Pauluhn, 1994).

Fig. 1: Inhalation Chamber

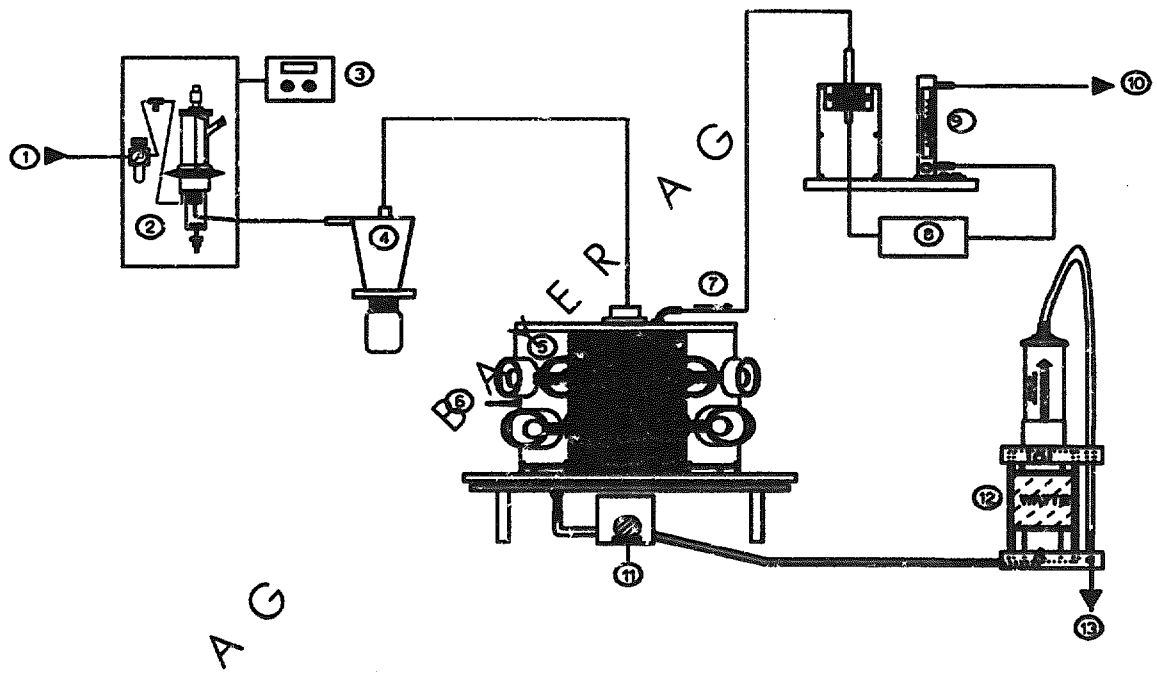

1. Compressed air supply	9.-10. Real-time aerosol monitoring
2. Dust generator	11. Sensor for temperature and humidity measurement
3. Digital control unit	12. Cotton-wool aerosol filter + HEPA filter
4. Cyclone	13. Exhaust air
6.. Sampling location ('breathing zone sampling')	

Conditioning the compressed air: Compressed air was supplied by Boge compressors and was conditioned (i.e. freed from water, dust, and oil) automatically by a VIA compressed air dryer. Adequate control devices were employed to control supply pressure.

Inhalation chamber steady-state concentration: The test atmosphere generation conditions provide an adequate number of air exchanges per hour (> 400 x, continuous generation of test atmosphere). Under such test conditions steady state is attained within the first minute of exposure ($t_{99\%}$ = 4.6 x chamber volume/flow rate; McFarland, 1976). The ratio between the air supplied and exhausted was chosen so that approximately 90% of the supplied air is removed as exhaust. The remainder provides adequate dead-space ventilation for the exposure tubes. At each exposure port a minimal air flow rate of 1.4 l/min was provided. This is equivalent to approximately 4 respiratory minute volumes of the rats. The test atmosphere can by no means be diluted by bias-air-flows. The inhalation chamber was operated in a well ventilated chemical fume hood.

Air flows: During the exposure period air flows were monitored continuously and, if necessary, readjusted to the conditions required. Air flows were measured with calibrated flowmeters and/or soap bubble meter (Gilibrator, Ströhlein Instruments, Kaarst) and were checked for correct performance at regular intervals.

Treatment of exhaust air: The exhaust air was purified via cotton-wool/activated charcoal and HEPA filters. These filters were disposed of by Bayer AG.

7.6. Inhalation Chamber Temperature and Humidity

The temperature and humidity measurements were made using a computerized system (Leybold Heraeus). The values were recorded at intervals of 10 min. For technical reasons the test atmosphere temperature and humidity were measured from the exhaust flow. Details of this monitoring system have been reported elsewhere (Pauluhn, 1986).

The relative humidity was measured with a humidity sensor (CCH capacitor). The humidity-sensor is protected from particles by a double sintered metal filter with an interposed Teflon membrane (pore size approximately 1 µm). This sensor was calibrated using saturated salt solutions according to Greenspan (1977). The temperature sensors were calibrated with a calibration thermometer. The measured values were recorded and evaluated with an Apple 2e computer and an MDP 8240/45 analogue-digital converter using an IEEE 488 interface.

7.7. Analysis of the Test Atmosphere

A nominal concentration was not calculated since the construction and weight of the dust generator used did not allow for a precise measurement of the powder aerosolized.

Gravimetric evaluation: The test-substance concentration was determined by gravimetric analysis (filter: Cellulose-Acetate-Filter, Sartorius, Göttingen, Germany; balance: Mettler AE 100).

Chamber samples were taken in the vicinity of the breathing zone (see Fig. 1). The number of samples taken was sufficient to characterize the test atmosphere and was adjusted so as to accommodate the sampling duration and/or the need to confirm specific concentration values. Optimally, samples were collected in hourly intervals. All analytical concentrations reported refer to mg of test substance/m³ air (gravimetrical method).

7.8. Characterization of Aerodynamic Particle-Size Distribution

The samples for the analysis of the particle-size distribution were also taken in the vicinity of the breathing zone.

The particle-size distribution was analyzed using an BERNER-TYPE Aeras cascade impactor. Specifications and evaluations are provided in the Appendix. The individual impactor stages were covered by aluminum foil and had been subjected to gravimetric analysis. An adhesive stage coating (silicone spray) was used to prevent particle bounce and re-entrainment, respectively. The aluminum foil used had been was evaluated gravimetrically using a Sartorius M3P balance.

Evaluation of particle-size distributions: For the evaluation of the cascade impactor analyses the mass median aerodynamic diameter (MMAD) and the geometric standard deviation (GSD) are determined from the probit-transformed cumulative particle mass frequency distribution (y-axis) and the logarithmic effective cut-off diameters (ECD's) (x-axis) of the individual impactor stages by linear regression. The GSD is calculated from the regression line: percentile 84 / percentile 50. The relative mass with an aerodynamic diameter ≤ 3 µm ("respirable mass fraction") [Raabe, 1982; Snipes, 1989; SOT-Commentary, 1992] is calculated from the regression line. For probit transformation and linear regression FORTRAN algorithms published by Rosiello et al. (1977) are used. The MMAD was calculated using published following formulas [Marple and Rubow, 1980; Pauluhn, 1994].

To verify whether the aerosol distribution is in fact unimodal and log-normal the normalized mass per stage (f_H') is evaluated as a histogram. $\Delta \log D_p$ is equal the difference $\log D_{p+1}$ - $\log D_p$, whereas D_p is the lower (left) cut-size limit and D_{p+1} the higher (right) cut-size limit of the corresponding impactor stage. As demonstrated by the evaluations included in the Appendix, the impactor stage cut-off limit (D_{p+1}) to the right was used for all calculations.

$$f_H' = \frac{1}{N_f} \times \frac{mass\ /\ stage}{\Delta \log D_p}$$

The log-normal mass distribution $y'(D_{ae}) = 1/N_f \times y(D_{ae})$ as a function of the aerodynamic diameter (D_{ae}) is computed using the formula:

$$y'(D_{ae}) = \exp\left(-\left(\frac{\log D_{ae} - \log MMAD)^2}{2 \times \log^2 GSD}\right)\right)$$

The normalization factor (N_f) is calculated as follows:

$$N_f = \frac{\Sigma mass}{\log GSD \times \sqrt{2\pi}}$$

Where Σmass is the total mass collected by the cascade impactor, where $m_{relative}$ = mass per stage/Σmass (*cf.* Fig. 2).

Figure 2: Principle of characterization of aerosol atmosphere

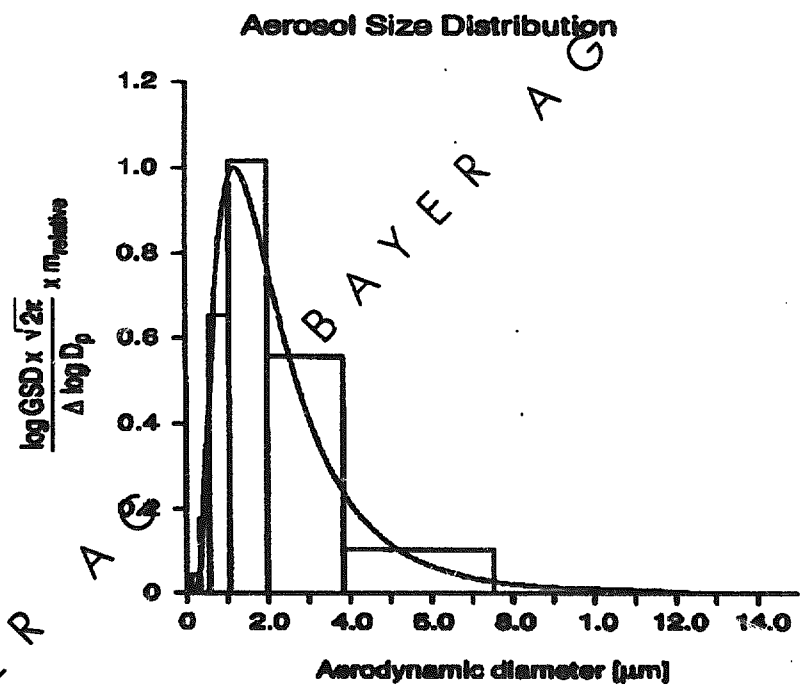

Where Σmass is the total mass collected by the cascade impactor, where $m_{relative}$ = mass per stage/Σmass.

The algorithm for the calculation of particle size characteristics is taken from pertinent reference works on aerosol physics (Dennis, 1976; Marple and Rubow, 1980) and proves to be generally applicable (Pauluhn 1988; Pauluhn, 1994).

Respirability
Fig. 3 below, demonstrates that the particle size distribution achieved is not adequate to reach all potential target structures of the respiratory tract.

Fig. 3 Respirability of Aerosols (Raabe, 1982)

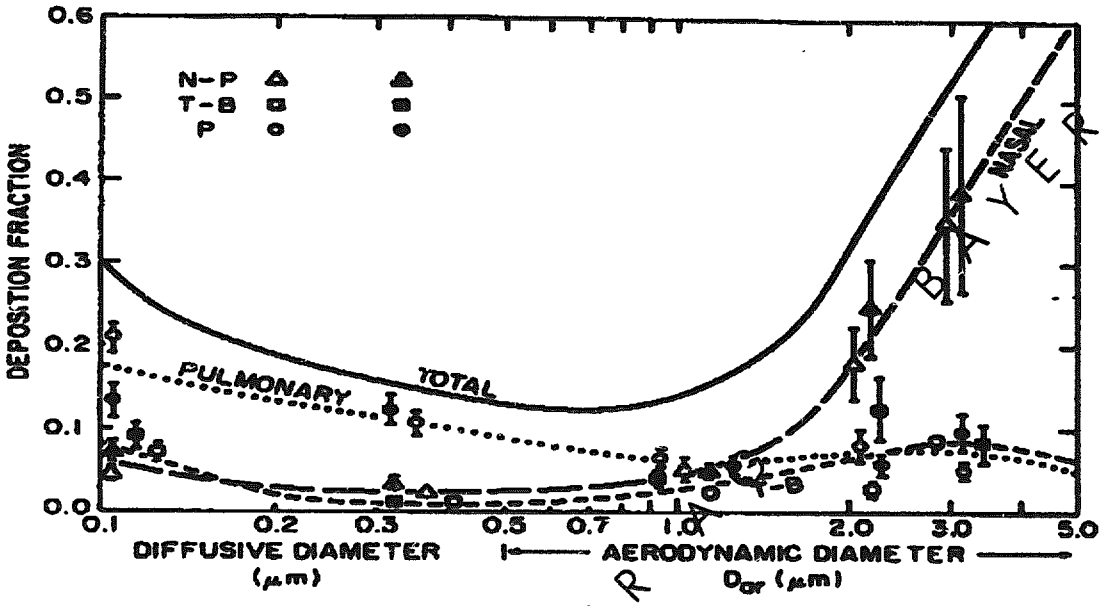

7.9. Collection Efficiency

The sampling equipment was adjusted with calibrated rotameters to internationally recognized standards (ACGIH, 1978; Section I "Calibration of Air Sampling Instruments").

The conditions for generating the test atmosphere are optimized to provide maximum aerosol respirability to rats (Raabe, 1982; Snipes, 1989; SOT-Commentary, 1992). The absence of larger particles and high flow rates in the vicinity of the sampling ports make it possible to disregard potential anisokinetic sampling errors, thus ensuring a representative sampling even with different sampling probe orifice diameters and flow rates. The tolerance limits for the radius of the probe orifice are calculated using the following formula [ACGIH, 1978]. Calculations consider both a particle size distribution that encompasses aerodynamic diameters (D_{ae}) of 0.5 to 7.4 μm and sample flows ranging from 8 to 80 ml/sec.

$$5 \times \sqrt[3]{\frac{flow \times \tau}{4 \times \pi}} \leq r_p \leq \frac{1}{5} \times \sqrt[2]{\frac{flow}{g \times \tau \times \pi}}$$

r_p = radius of the sample probe in cm = ½ x D_p
τ = relaxation time (D_{ae} 0.5 μm = 1×10^{-6} sec; D_{ae} 7.4 μm = 1.7×10^{-4} sec)

g = gravity constant = 980 cm/sec^2

Tolerance limits calculations for the sample probe orifice (r_p) indicated that a representative sampling is assured when the orifice inner diameter is in the range of 1.0 to 1.6 cm. Orifices of the sampling instruments used here are in compliance with this criteria. Details of the D_p tolerance limit calculations are published elsewhere (Pauluhn, 1988; Pauluhn, 1994).

7.10. Stability of the Test Atmosphere

The integrity stability of the aerosol generation system was checked using a RAS-2 aerosol photometer (MIE, Bedford, Massachusetts, USA). Samples were taken continuously from the vicinity of the breathing zone. This chamber monitoring allows for an overall survey of toxicologically relevant technical parameters (inlet and exhaust flows as well as atmosphere homogeneity, temporal stability, and generation performance). Interruptions in exposure (e.g. resulting from obstruction of the nozzle or other technical mishaps) are recorded and, if applicable, a commensurate interval is added to the exposure duration for compensation.

7.11. Number of Animals

Five male and five female rats were simultaneously exposed to each concentration under nose-only conditions for 4 hours.

7.12. Control Animals

To identify exposure-related effects, comparisons with appropriate controls are conducted. Controls were exposed to conditioned air using almost similar exposure conditions as were used for the test substance (15 liters air/min; duration of exposure = 1 x 4 h; 5 males and females per group; 4 week observation period). Direct comparisons were made between the control and exposure groups.

Note: Control studies are performed under GLP-conditions but without assignment to a particular study. This allows use of control data for several studies that have been performed under similar experimental conditions within a recent time frame. This procedure is in compliance with current testing guidelines as well as animal welfare regulations.

BAYER AG

7.13. Body Weights and Duration of Observation Period

Body weights were measured before exposure, on days 3 and 7, and weekly thereafter. Individual weights are also recorded at death, if applicable. The period of observation was for 4 weeks.

7.14. Clinical Signs

The appearance and behavior of each rat was examined carefully several times on the day of exposure and once thereafter. Weekend assessments were made once a day (morning). Assessments from restraining tubes were made only if unequivocal signs occurred (e.g. spasms, abnormal movements, severe respiratory signs). Following exposure, observations are made and recorded systematically; individual records are maintained for each animal. Cageside observations included, but were not limited to, changes in the skin and fur, eyes, mucous membranes, respiratory, circulatory, autonomic and central nervous system, and somatomotor activity and behavior pattern. Particular attention was directed to observation of tremors, convulsions, salivation, diarrhea, lethargy, somnolence and prostration. The time of death is recorded as precisely as possible, if applicable.

Since these signs can only be assessed adequately from freely moving animals, no specific assessment was performed during exposure while animals were restrained.

Clinical observations were conducted so as to take into account the pattern of examination consistent with a Functional Observational Battery (FOB). Each rat was first observed in its home cage and then individually examined. The following reflexes were tested, based on recommendations made by Irwin (1968) and Moser et. al. (1988): visual placing response and grip strength on wire mesh, abdominal muscle tone, corneal and pupillary reflexes, pinnal reflex, righting reflex, tail-pinch response, startle reflex with respect to behavioral changes stimulated by sounds (finger snapping) and touch (back).

7.15. Rectal Temperatures

The rectal temperatures were measured directly after cessation of exposure (approximately within ½hour after the end of exposure) using a Digimed H 11 digital thermometer with an F2 rectal probe.

7.16. Necropsy

All surviving rats were sacrificed at the end of the observation period using sodium pentobarbital (Nembutal®) (approximately 300 mg/kg body weight, intraperitoneal injection). All rats, irrespective of the day of death, were given a gross-pathological examination. Consideration was given to performing a gross necropsy on animals as indicated by the nature

of toxic effects, with particular reference to changes related to the respiratory tract. All gross pathological changes were recorded and evaluated.

7.17. Statistical Evaluation of Data

With graphs of means of data, the indicated parameters were evaluated relative to controls (mean = 100%). The single standard deviations are also shown relative to the means of the controls. Statistically significant differences (versus control) are indicated here by asterisks ('*' for $p < 0.05$ and '**' for $p < 0.01$).

Necropsy findings: If specific findings occur from the respiratory tract of surviving rats they are evaluated statistically using the pairwise Fisher test after the R x C chi-squared test (HP 3000, Department of Toxicology, Bayer AG). The Fisher test was only performed if differences occurred between groups in the R x C chi-squared test or if a frequency value of < 5 was calculated. This procedure was performed in accordance with Gad and Weil (1982). For calculation of the unilateral p value a symmetrical distribution was assumed (p unilateral = (p bilateral)/2).

Body weights: Means and single standard deviations of body weights are calculated. Mean body weights are also depicted graphically as a function of time (see Appendix). Since in acute studies individual group means may differ prior to commencement of the first exposure, the body weight gain was statistically evaluated for each group. For these evaluations a one-way ANOVA (vide infra) is used.

Particle size analysis: The statistical methods used in the evaluation of the particle-size distribution were described in Section 7.8.

Physical measurements: The means and, if appropriate (more than 3 values per measurement), a single standard deviation are calculated.

Physiological data: Data of rectal temperature measurements are statistically evaluated using the ANOVA procedure (vide infra).

Calculation of the LC_{50}: If calculation of a median lethal concentration (LC_{50}) is possible, it is performed by computer (HP 3000) according to the method of A.P. Rosiello, J.M. Essigmann, and G.N. Wogan (1977) as modified by Pauluhn (1983). This method is based on the maximum-likelihood method of C.I. Bliss (1938). If only 2 pairs of values with greater than 0% lethality and less than 100% are available then the first linear approximation is based on these values and a χ^2-homogeneity test is not performed. The interpolated concentration at 50% lethality in this case was designated the approximate LC_{50}.

Randomization: A computerized list of random numbers served the purpose to assign animals at random to the treatment groups.

BAYER AG

Analysis of variance (ANOVA): This parametric method checks for normal distribution of data by comparing the median and mean. The groups are compared at a confidence level of ($1-\alpha$) = 95% ($p = 0.05$). The test for the between-group homogeneity of the variance employed Box's test if more than 2 study groups were compared with each other. If the above F-test shows that the intra-group variability is greater than the inter-group variability, this is shown in the Appendix as *"no statistical difference between the groups"*. If a difference is found then a pairwise post-hoc comparison is conducted (1- and 2-sided) using the Games and Howell modification of the Tukey-Kramer significance test. This program was originally obtained from BCTIC.

7.18. Programming and Validating Software

Software code for the following purposes was written in HP Fortran (HP-3000) or Microsoft Fortran 77 (PC): particle-size analysis, ANOVA, Fisher test, inhalation chamber and physiological data tabulation program, graphics software. All scratch files were generated using Fortran F8.3 format using the Fortran default rounding routines. Fortran format A was always used to generate alphanumeric tables and graphs; i.e. numbers in figures and tables are rounded-up or -off due to the different format codes of the server. The computer programs were carefully validated. The validation was conducted using published text book data sets (e.g. BCTIC, Gad and Weil, 1982). However, it should be emphasized that the formal GLP-requirements required for software validation were not fulfilled. Wherever possible, raw data and calculated/derived values are displayed graphically to provide a versatile opportunity for data comparison.

7.19. Archiving the Raw Data and the Report

The protocol, raw data, and the final report are archived in locations specified by Bayer AG, in accordance with GLP requirements.

BAYER AG

8. RESULTS

8.1. Generation and Characterization of Atmosphere

Technical information concerning generation of test atmospheres is provided in Table 1.

Table 1: Generation and characterization of chamber dust atmosphere

	Group 1	Group 2	Group 3	Group 4	Group 5	Group 6	Group 7
Generator	-	EXA	EXA	EXA	EXA	EXA	EXA
Gravimetric Conc. (mg/m³)	-	96	189	238	314	384	541
Inlet Air Flow (l/min)	15	28	28	28	28	28	28
Exhaust Air Flow (l/min)	13	22	22	22	22	22	22
Temperature (mean, °C)	22	23	22	22	22	22	22
Rel. Humidity (mean, %)	38	23	38	39	35	37	36
MMAD (µm)	-	3.1	3.2	4.0	3.6	3.8	3.1
GSD	-	1.6	1.7	2.1	1.5	1.5	1.6
Aerosol Mass < 3 µm (%)	-	49	46	36	31	27	47
Mass recovered (mg/m³)	-	44	148	128	357	429	413

MMAD = Mass Median Aerodynamic Diameters
GSD = Geometric Standard Deviation.
- = not applicable; EXA: Exactomat

For specific information concerning calculations of aerosol MMAD, GSD, and mass dependent size fraction below 3 µm, see the Appendix.

Characterization of the test atmospheres: Analytical monitoring of the aerosol test atmosphere from the breathing zone (4 samples/exposure) indicated that the exposure conditions were temporally stable over the exposure period. Analysis of the aerosol particle-size distribution from the breathing zone demonstrated that the aerosols generated were, in general, in the respirable range (SOT, 1992).

Temperature and humidity values in the inhalation chamber were in the range suggested by the testing guidelines.

8.2. Toxicological Results

The results obtained during and after exposures of rats for 4 hours to this test substance are summarized in Table 2. Controls were exposure for 4 hours to air.

Table 2: Summary of acute inhalation toxicity

Group /sex	Gravimetric Concentration (mg/m³)	Toxicological Result	Onset and Duration of Signs	Rectal Temperature (°C)	Onset of Mortality (%)
1 / m	0	0 / 0 / 5	--	38.2	--
2 / m	96	0 / 5 / 5	4h - 8d	32.5**	--
3 / m	189	0 / 5 / 5	4h - 7d	31.2**	--
4 / m	238	3 / 5 / 5	4h - 7d	30.6**	1d
5 / m	314	3 / 5 / 5	4h - 7d	30.4**	1d - 2d
6 / m	384	4 / 5 / 5	4h -11d	29.4**	1d
7 / m	541	4 / 5 / 5	4h -11d	29.2**	1d
1 / f	0	0 / 0 / 5	--	38.6	--
2 / f	96	0 / 5 / 5	4h - 8d	32.0**	--
3 / f	189	0 / 5 / 5	4h - 7d	31.6**	--
4 / f	238	3 / 5 / 5	4h - 7d	30.9**	1d - 2d
5 / f	314	3 / 5 / 5	4h - 7d	31.0**	1d - 2d
6 / f	384	4 / 5 / 5	4h - 6d	30.6**	1d
7 / f	541	4 / 5 / 5	4h - 6d	30.5**	1d

m = males, f = females, -- not applicable, ** = $p < 0.01$

Values given in the 'Toxicological results' column are:
1st = number of dead animals.
2nd = number of animals with signs after cessation of exposure.
3rd = number of animals exposed.

Mortality / LC_{50} Calculation:

LC_{50} - males & females combined: 270 mg/m³ air
95% confidence interval: 217 - 337 mg/m³ air
slope = 1.53

The concentration-mortality relationship as well as the pertinent survival rates are shown graphically in the Appendix. The exact onset of mortality is provided in the gross necropsy tables.

Signs and observations:

Details concerning signs and observations are provided in the Appendix as various incidence tables. The following list of signs is focusing on major signs only.

Groups 1: All rats tolerated the treatment without signs.

Group 2: Bradypnoea, laboured breathing pattern, sneezing breathing sounds, nose/snout area with red colourations/encrustations, reduced motility, flaccid appearance, ungroomed hair-coat, piloerection.

Group 3: Bradypnoea, laboured and unregular breathing pattern, rales, nose/snout area with red encrustations, salivation, serous discharge from nose, cyanosis, reduced motility, apathy, flaccid appearance (atony), ungroomed hair-coat, piloerection.

Group 4-7: Bradypnoea, laboured and unregular breathing pattern, rales, sneezing breathing sounds, nose/snout area with red encrustations, salivation, serous discharge from nose, cyanosis, reduced motility, apathy, flaccid appearance (atony), ungroomed hair-coat, piloerection, emaciation.

Reflex Measurements:
The battery of reflex measurements were made as indicated in the Appendix. Summaries of the reflex data are shown in the Appendix. All animals showed normal reflexes.

Rectal Temperature:
Results of the evaluation of the rectal temperature are summarized in Table 2. Individual data are provided in the Appendix. Statistical comparison between groups exposed to the aerosolized test compound with those in the control group did indicate effect on body temperature in all groups exposed to the test compound.

Body Weights:
Individual data as well as evaluations of data concerning body weight gain are included in the Appendix. Statistical comparisons between the groups indicated significantly decreased body weights in all groups exposed to the test compound.

BAYER AG

Necropsy:
Individual findings from the gross-pathological examinations are shown in the Appendix. A qualitative description, only for findings of toxicological importance and for toxicological evaluation, is given below.

Animals sacrificed at the end of the observation period:
In rats exposed to the test compound an increased incidence of macroscopical findings was observed on lungs. However, the findings appeared not to induced in a clear concentration-dependent manner.

Animals sacrificed during the observation period:
White foamy discharge from snout, red encrustations in the muzzle area, lung with dark-red colourations and spongy (oedematous) appearance, foam in trachea, distended, hydrothorax; lobulation of liver, and pale parenchymatous organs.

BAYER AG
BAYER AG
BAYER AG
BAYER AG

9. EVALUATION AND DISCUSSION

A study on the acute inhalation toxicity of DESMODUR 15 in rats has been conducted in accordance with OECD Guideline No. 403. The aerosol generated was of adequate respirability.

Aerosol (dust) concentrations to 238 mg/m³ and above induced test substance related mortality within the first two postexposure days. Exposure to concentrations equal or less than 189 mg/m³ test compound were tolerated without mortality. Necropsy findings support the conclusion that a causal relationship between lethality and lung damage existed. Exposures to concentrations of 96 mg/m³ and higher were followed by concentration-dependent signs suggestive of irritation of the respiratory tract (e.g. bradypnoea, dyspnoea, laboured breathing pattern, rales, nose/snout area with red encrustations, serous discharge from nose, cyanosis, hypothermia) and non-specific signs such as reduced motility, body weight gain, emaciation, and flaccid muscle tone. The duration of signs (maximum duration up to day 11) was dependent on respiratory signs.

The aerosolized test substance (dust) was of adequate respirability. Accordingly, mortality appeared to be related to damage of the respiratory tract in general and the lower tract in particular.

BAYER AG
BAYER AG
BAYER AG

10. KEY TO ABBREVIATIONS

Konz.	Concentration
nomin.	Nominal
analyt.	Analytical
mcm/µm	Micrometer
Expos.	Exposure
MMAD	Mass Median Aerodynamic Diameter
NMAD	Number Median Aerodynamic Diameter
GSD	Geometric standard deviation (GSD)
ECD	Effective cut-off diameter
Ai	Sample for analysis
STAND, S, Std, s	Standard deviation
MW/MEANS	Means
F	F-test value (F-ratio)
DF	Degrees of freedom
PROB	Probability
SS	Total sum of squares
MS	Mean squares
TREATMENT	- between the groups
ERROR	- within the groups
TOTAL	- total
Observation No.: n-nn	Body weight gain from date n to date nn

BAYER AG

11. REFERENCES

ACGIH (American Conference of Governmental Industrial Hygienists) (1978)
Air Sampling Instruments for Evaluation of Atmospheric Contaminants, 5th Edition, ACGIH p. F-6. ACGIH section I: Calibration of Air Sampling Instruments and section F: Aerosol Sampling for Particle Size Analysis.

BCTIC Computer Code Collection - Biomedical computing Technology Information Center, ANOVA a Fortran Program to Perform one-way Classification Analysis of Variance. Vanderbilt Medical Center, Nashville Tennessee, U.S.A.

BLISS, C.I. (1938)
The Determination of the Dosage-Mortality Curve from Small Numbers. Q.J. Pharm. Pharmacol. 11, 192-216.

CHEMG (1994).
Principles of Good Laboratory Practice, BGBl [federal law gazette], dated July 29, 1994.

DENNIS, R.(1976)
Handbook of Aerosols - Technical Information Center, Energy Research and Development Administration, S. 110-114, July 1976.

EG Guideline 86/609/EC (1986)
Guideline of the Council dated November 24, 1986 on the Reconciliation of Legal and Administrative Regulations of the Member Countries for the Protection of Animals used for Studies and other Scientific Purposes. Journal of the European Community, Legal Specifications L 358, 29.

EG Guideline 92/69/EWG
Journal of the European Community - Legal Specifications L 2383 A, 35, December 29, 1992. B.2. Acute Toxicity - Inhalation. p. 121.

GAD, S.C. and WEIL, C.S. (1982)
Statistics for Toxicologists. Principles and Methods of Toxicology, ed. A.W. Hayes, Raven Press, New York, p. 280.

GREENSPAN, L. (1977)
Humidity Fixed Points of Binary Saturated Aqueous Solutions, Journal of Research of the National Bureau of Standards, Vol. 81 A, no. 1, Jan.-Febr. 1977.

IRWIN, S. (1968)
Comprehensive Observational Assessment: Ia: A Systematic, Quantitative Procedure for Assessing the Behavioral and Physiologic State of the Mouse. Psychopharmalogica 13, pp. 222-257.

MARPLE, V.A. and RUBOW, K.L. (1980)
Aerosol Generation Concepts and Parameters in Generation of Aerosols and Facilities for Exposure Experiments, Ed. K. Willeke, Ann Arbor Science Publ. Inc. Mich., pp. 3-29.

McFARLAND, H.N. (1976)
Respiratory Toxicology - Essays in Toxicology, Vol. 7, pp. 121-154, Academic Press Inc., New York, San Francisco, London.

MOSER, V.C., McCORMIC, J.P., CREASON, J.P., and MacPHAIL, R.C. (1988)
Comparison of Chlordimeform and Carbaryl Using a Functional Observational Battery. Fundamental and Applied Toxicology, 11, 189-206.

MOSS OR, ASGHARIAN B (1994).
Precise inhalation dosimetry with minimum consumption of product: The challenge of operating inhalation exposure systems at their design limits. Respiratory Drug Delivery IV pp. 197-201.

OECD - GLP (1983)
Publication of the German version of the OECD Principles of Good Laboratory Practice (GLP), *Bundesanzeiger*, 35, No. 42a dated March 2, 1983.

OECD-Guideline for Testing of Chemicals No. 403. "Acute Inhalation Toxicity", adopted May 12 (1983).

PAULUHN, J. (1986)
Study to Determine Temperature and Humidity Data in Inhalation Chambers; BAYER AG Report No. 15007 dated August 22.

PAULUHN, J. (1983)
Computer-Aided Estimation of the LD_{50}/LC_{50} BAYER AG Report No. 11835, dated May 18.

PAULUHN, J. (1994)
Validation of an improved nose-only exposure system for rodents. Journal of Applied Toxicology, 14:55-62.

PAULUHN, J. (1988)
Different Methods used in Acute and Subchronic Inhalation Studies of Potential Lung Irritants with Particular Attention to Lung Function Measurements. In U. Mohr (ed.), Inhalation Toxicology - The Design and Interpretation of Inhalation Studies and their Use in Risk Assessment. Springer Verlag, pp. 87-101.

PAULUHN, J. (1984)
Head-only and nose-only exposure in P. Grosdanoff, R. Baß, U. Hackenberg, D. Henschler, D. Müller, H.-J. Klimisch (eds.), Problems of Inhalatory Toxicity Studies, BGA-Schriften, MMV Medizin Verlag München, Vol. 5, pp. 59-68.

RAABE, O.G. (1982)
Deposition and Clearance of Inhaled Aerosols in H. Witschi and P. Nettesheim - Mechanisms in Respiratory Toxicology Vol. I, pp. 27-76, CRC Press, Inc. Boca Raton, Florida.

BAYER AG

ROSIELLO, A.P., ESSIGMANN, J.M., and WOGAN, G.N. (1977)
Rapid and Accurate Determination of the Median Lethal Dose (LD_{50}) and its Error with Small Computer. J. Tox. and Environ. Health 3, pp. 797-809.

SNIPES, M.B. (1989)
Long-Term Retention and Clearance of Particles Inhaled by Mammalian Species. Critical Reviews in Toxicology, Vol. 20, pp. 175-211.

SOT-COMMENTARY (1992)
Recommendations for the Conduct of Acute Inhalation Limit Tests, prepared by the Technical Committee of the Inhalation Specialty Section, Society of Toxicology. Fundam. Appl. Toxicol. 18, pp. 321-327.

TILLERY, M.I., WOOD, G.O., and ETTINGER, J.J. (1976)
Generation and Characterization of Aerosols and Vapors for Inhalation Experiments. Environmental Health Perspectives 16, pp. 25-40.

U.S. Environmental Protection Agency (1984). Pesticide assessment guidelines, subdivision F, hazard evaluation: Human and domestic animals (Revised) § 81-3 Acute Inhalation Toxicity Study. NTIS Report PB86-108958, Washington, DC.

U.S. Environmental Protection Agency 40 CFR Part 160. Federal Insecticide, Fungicide and Rodenticide Act (FIFRA); Good Laboratory Practice Standards (Final Rule); Thursday August 17, 1989.

U.S. Environmental Protection Agency (1988). Hazard evaluation division: Standard evaluation procedure, inhalation toxicity testing, NTIS Report PB89-100366, Washington, DC.

BAYER AG

Best Available Copy