"Contains NO CBI"

(1)

92 SEP 30 PM 12: 24

September 28, 1992

(A)

8EHQ-92-12046
INIT

Document Processing Center (TS-790)
Office of Pollution Prevention and Toxics
U. S. Environmental Protection Agency
401 M Street, SW
Washington, DC 20460
Attn: 8(e) Coordinator (CAP Agreement)

88920010286

Dear Sir or Madam:

Subject: Report submitted in accordance with guidelines established by the U. S. Environmental Protection Agency Registration and Agreement for the TSCA 8(e) Compliance Audit Program

Report submitted by: Eastman Kodak Company
343 State Street
Rochester, NY 14650
(716) 724-4000
CAP Agreement Identification Number (8ECAP-0039)

This report pertains to ethylene glycol monopropyl ether (synonym: 2-propoxyethanol; EGPE) [CAS# 2807-30-9] and is being submitted because of effects observed in a series of studies conducted by multiple routes of exposure. The titles of the studies being submitted are "Basic Toxicity of 2-Propoxyethanol", "Two Week Inhalation Toxicity of 2-Propoxyethanol", "Subchronic Inhalation Toxicity Study of Ethylene Glycol Monopropyl Ether in the Rat", "2-Propoxyethanol: Inhalation Teratology Probe in Rats", "A Developmental Toxicity Probe Study of Ethylene Glycol Monopropyl Ether in the Rabbit", "A Developmental Toxicity Study with Ethylene Glycol Monopropyl Ether in the Rabbit", "Developmental Toxicity of Ethylene Glycol Monopropyl Ether (EGPE) in the Rat", and "A Subchronic Inhalation Study of Ethylene Glycol Monopropyl Ether in Rats Using a Functional Observational Battery and Neuropathology to Detect Neurotoxicity". This report is being identified as a study involving other than human effects (Unit II.B.2.b of CAP Agreement).

In an acute inhalation toxicity study in male rats, the 6-hour LC_{50} was greater than 2132 ppm. Hemoglobinuria was observed in all animals at concentrations of 2132 ppm or greater. Hemoglobin concentration and hematocrit were reduced over the dose range tested, 273-2132 ppm. Effects were reversible. In a subsequent study, groups of five male rats were exposed to 100 ppm EGPE for 6 hours/day for 12 exposures. No compound-related hematological, gross or histopathologic changes were observed. Repeated oral administration of 1000 or 100 mg/kg to rats resulted in red cell changes at the high-dose level. No compound-related gross or histopathologic lesions were observed.

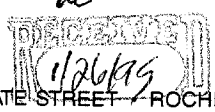

Kodak
Official Sponsor
of the 1992
Olympic Games

Groups of five male rats and five female rats were exposed by inhalation to 800, 400, 200, 100 or 0 ppm of the test material 6 hours/day, 5 days/week for 11 exposures. Hemoglobinuria was observed in one or more animals in the 800 and 400 ppm exposure groups after one or two exposures but not after subsequent exposures. Abnormalities observed in the 800 and 400 ppm male and female exposure groups included: hematologic changes; increased absolute and relative spleen weights in males (800 and 400 ppm) and females (800 ppm); and gross and histopathologic splenic changes. The no-observed-effect exposure concentration was 200 ppm.

Groups of 15 males and 15 females were then exposed to 400, 200 or 100 ppm of EGPE 6 hours/day, 5 days/week for 14 weeks. No clinical signs of toxicity were noted during exposure. Concentration dependent hemoglobinuria was observed following exposure in animals in the 400 and 200 ppm groups. Abnormalities observed in the 400 and 200 ppm exposure groups included: changes in clinical chemistries; decreased red blood cell counts, hemoglobin concentration, and hematocrit; increased relative and absolute spleen weights in 400 ppm exposed males and 400 and 200 ppm exposed females; and pigmentation deposits in the kidneys, liver, and spleen.

A second subchronic inhalation study including a functional observational battery and neuropathology was conducted at the same exposure levels. Results were similar to those reported in the previous subchronic study. No neurological effects were observed at the highest dose level tested.

In an inhalation teratology probe study designed to select appropriate exposure levels for a teratology study, groups of 10 pregnant rats were exposed to vapor concentrations of 400, 800 or 1600 ppm for 6 hours per day on Days 6 through 15 of gestation. Maternal lethality was observed at the high-dose level. Concentrations of 400 and 800 ppm produced maternal toxicity and embryo/fetolethality and/or fetotoxicity. Concentration dependent hematologic effects were observed in dams at all dose levels. Abnormalities observed in the 400 and 800 ppm exposure groups included: decreased maternal absolute and relative thymus weights; increased maternal absolute and relative spleen weights; maternal gross and histopathologic changes; increased numbers of resorptions in dams exposed to 800 ppm; and reduced fetal body weights in litters of dams exposed to 400 or 800 ppm.

Pregnant rats were exposed by inhalation to vapor concentrations of 100, 200, 300 or 400 ppm of the test chemical for 6 hours per day on Days 6 through 15 of gestation. Maternal toxicity, including an increase in reticulocyte counts and polychromasia of the red blood cells, was observed at all dose levels. Other maternal effects observed at some dose levels included: a slight reduction in red blood cell count and an increase in mean corpuscular volume and mean corpuscular hemoglobin at 200, 300 and 400 ppm; and an increase in relative and spleen weights at 300 and 400 ppm. Histopathologic effects were observed in the spleen, liver, and thymus. EGPE did not produce teratogenicity or significant embryo/fetotoxicity in the rat at vapor concentrations as high as 400 ppm. Variations in the ossification of certain skeletal elements and the incidence of 14th rudimentary ribs were increased by exposure to 200, 300 or 400 ppm EGPE.

(3)

Document Processing Center (TS-790) -3

In a dose range finding study, groups of pregnant rabbits were exposed to 400, 800 or 1000 ppm ethylene glycol monopropyl ether by inhalation on Days 6 through 18 of gestation. Exposure at 1000 or 800 ppm produced maternal toxicity but did not appear to have an effect on the developing conceptus. Thirteen exposures to 400 ppm EGPE produced slight maternal toxicity but no adverse effects on the developing conceptus. In a subsequent study, groups of pregnant rabbits were exposed to 125, 250 or 500 ppm of the test material for 6 hours per day on the 6th through the 18th days of gestation. Slight maternal toxicity was observed in the 250 and 500 ppm exposed dams. Reproductive indices were not affected. Vapor concentrations as high as 500 ppm were not teratogenic for the rabbit conceptus and did not produce definitive evidence of developmental toxicity.

Questions regarding this submission should be addressed to:

Mr. William Hart
Eastman Kodak Company
Corporate Health and Environment Laboratories
Rochester, NY 14652-3615
(716)722-5991

Sincerely,

for

R. Hays Bell, Ph.D.
Vice President
Corporate Health, Safety and Environment
(716)722-5036

RHB:JAF
Enclosures

"Contains NO CBI"

104723Q

Basic Toxicity of 2-Propoxyethanol,

Toxicology Section

Written by: G. V. Katz

November 30, 1978

104723Q

Basic Toxicity of 2-Propoxyethanol,

The oral LD50 for this compound to rats and mice was 3200 and 2262 mg/kg b.w., respectively. A red discolored urine was observed in both species at all dose levels (200-3200 mg/kg). When applied under an occluded patch to the depilated guinea pig abdomen for a 24 hour period, this compound was systemically absorbed and resulted in the mortality of all animals dosed with concentrations greater than 5.0 ml/kg b.w. The LD50 for skin absorption was estimated to be greater than 1.0 but less than 5.0 ml/kg b.w. In the surviving animals, skin irritation was considered slight. Repeated application over a ten day period resulted in no mortality but slightly exacerbated the skin irritation. The compound was not considered a significant skin sensitizer although 1/5 animals did show a weak response.

The LC50 in male rats following single six hour inhalation exposures was estimated to be greater than 2132 ppm, the highest practical vapor concentration achievable. A red discolored urine was observed in all animals at concentrations of 1100 ppm and greater. Blood samples were taken from one animal in each group hourly during exposure and at intervals up to two weeks following exposure. Hemoglobin concentration and hematocrit were reduced at all levels tested, 273-2132 ppm. In addition, gross hemolysis was also observed at concentrations greater than 1100 ppm. The severity of these blood changes increased

as a function of both concentration and length of exposure. Hemolysis was no longer detected 24 hours after exposure and hemoglobin concentration and hematocrit returned to control levels within two weeks after exposure.

A group of five male rats was given repeated six hour exposures to 100 ppm for a total of 12 exposures. A sixth rat was included as a sentinel only from which blood samples were taken daily immediately after exposure. Hemoglobin concentration and hematocrit were considered normal for each sample. Moreover, no hemolysis was detected. Body weight gain, absolute and relative spleen, kidney and liver weights were similar to control values. Serum clinical chemistry levels of glutamic oxaloacetic transaminase and lactic acid dehydrogenase were slightly lower ($p \leq 0.05$, Student's "t" test) than control values while glutamic pyruvic transaminase levels were slightly elevated. However, all these values were well within historical control levels and not considered biologically significant. Alkaline phosphatase, urea nitrogen and glucose levels were comparable to control values. Hematology values for hemoglobin concentration, hematocrit, white blood cell counts and differential white blood cell counts determined from blood samples just prior to necropsy were identical to controls. There were no compound related gross or microscopic changes detected on examination of the animals and their tissues. However, in view of the single exposure inhalation studies, the red cell may be the target tissue.

A study was also performed in which groups of rats were given daily oral doses of 1000, 100 or 0.0 mg compound/kg b.w. by gavage. As a

result of an undetermined number of accidental dosings of the control group, clinical comparisons were difficult to assess. However, repeated administration did produce compound related red cell changes in the high dose and control groups including poikilocytosis and anisocytosis similar to the repeated inhalation study. No compound related gross or microscopic lesions were detected in either the 1000, 100 or 0.0 mg dose group.

The static 96 hour LC50 was estimated to be greater than 100 µl/l, the highest concentration tested, for fathead minnows, daphnids, snails and flatworms. The germination, hypocotyl growth and root growth of ryegrass, radish and lettuce remained unaffected at a concentration of 100 µl/l, the highest concentration tested. The BOD_5 was found to be 0.004 g O_2/ml sample containing 0.1% compound. The BOD_{20} was found to be 1.6 g O_2/ml sample containing .0001% compound. The TOD and COD were 2.0 and 1.44 g O_2/ml sample, respectively.

GVK:bdo

Summary of Basic Toxicity

Chemical 2-Propoxyethanol

Date 11-30-78

LD_{50} (mg/kg) P.O. Rats 3200 (1460-7011)* Mice 2262

*95% Confidence interval

Remarks:

Blood in urine at dose levels ranging from 200-3200 mg/kg b.w. in rats and mice.

Skin Irritation (covered) Slight Moderate Strong Absorption: Systemic toxicity indicated

Remarks: Caused mortality in 5/5 animals tested at concentrations of 5 ml/kg or greater. Caused no mortality in 5/5 animals tested at concentrations of 1 ml/kg or less (1 ml/kg < LD50 < 5 ml/kg).

Eye Irritation

				Fluorescein stain	
ND	Slight	Moderate	Strong	Cornea	Adnexa

No. washed
No. unwashed

Remarks:

Skin Sensitization Potential No. guinea pigs 5

None 4/5 Weak 1/5 Moderate Potent

Remarks:

Repeated (10 days) Skin Application (uncovered) No. guinea pigs 5

Remarks: Slight erythema at 24 hr., 3/5. Slight to moderate erythema at 10 days in all animals with possible defatting, 3/5.

Other Tests

Summary of Basic Toxicity--2

Repeated Feeding No. rats/group_____ No. days_____ Carrier_____

Aborted; controls inadvertently dosed	_____%	_____%	_____%	_____%
Weight gain	_____	_____		
Feed intake	_____	_____		
Signs/behavior	_____	_____		
Clinical Chemistry:				
GOT	_____	_____		
GPT	_____	_____		
LDH	_____	_____		
AP	_____	_____		
UN	_____	_____		
Gluc.	_____	_____		
Hematology				
Hgb.	_____	_____		
Hct.	_____	_____		
WBC	_____	_____		
Diff.	_____	_____		
Organ Weight:				
Liver				
Abs.	_____	_____		
Rel.	_____	_____		
Kidney				
Abs.	_____	_____		
Rel.	_____	_____		

Pathology

Acute inhalation: LC50 >2132 ppm* Concn. 273-2132 ppm No. rats 20

Hgb. ↓ Hct. ↓ Hemolysis ↑

*Highest practical vapor conc. achievable.

Repeated Inhalation Concn. 100±3 ppm (Mean ±ISD) No. rats 5 No. days 6 hr/dayx12 days

Wt. change N Signs/behavior N

Hemat.: Hgb. N Hct. N WBC N Diff. N

Clinc. Chem.: GOT ↓3 GPT ↑3 LDH ↓1 AP N UN N Gluc. N

Pathology No compound related gross or microscopic changes were detected.

Static 96 hour LC_{50} ~~mg/l~~ µl/l

Fathead minnows >100** Daphnids >100 Snails >100 Flatworms >100

No effect concn. ~~mg/l~~ µl/l

	Germination	Hypocotyl Growth	Root Growth
Ryegrass	>100**	>100	>100
Radish	"	"	"
Lettuce	"	"	"

Remarks: **Highest conc. tested

Summary of Basic Toxicity--3

No effect concn. ND mg/l µl/l Early Plant Growth

Marigold		
Radish		
Corn		
Lettuce		

Remarks:

Industrial Laboratory (g O_2/ml sample)

BOD_5 .004* BOD_{20} 1.6** TOD 2.0 COD 1.44

*At a concentration of 1 ml compound/l sample.
**At a concentration of 1 µl compound/l sample.

Historical Control Data (5/77)

	Mean	SD	Extremes
GPT	70	16	29-135
GOT	174	32	114-304
LDH	1410	494	459-3135
AP	669	170	341-1166
UN	19.0	2.9	9.0-29.0
Glucose	141	17.6	94-216
Hgb	14.6	1.1	10.5-18.7
Hct	45.8	3.4	35-58
WBC	13,955	4330	6700-46,500
Poly	18.4	7.4	4-50
Band	2.1	2.1	0-11
Lymph	78.1	8.5	44-95

Legend

↑	Increased
↓	Decreased
1	Slight
2	Moderate
3	Great
N	Normal
ND	Not done

9-16-77/bdo

August 1, 1979

Addendum to Toxicology Section Report 104723Q, "Basic Toxicity of 2-Propoxyethanol

The ocular irritancy of the compound was determined using a standardized test; administration of one drop of liquid into the conjunctival sacs of six rabbit eyes, three of which were promptly washed.

The compound was a moderate to strong eye irritant causing slight to severe erythema and slight to moderate edema of the conjunctivae, iritis and staining of adnexae and cornea. Some degree of corneal opacity was seen in all eyes tested. All signs resolved by 14 days. Prompt irrigation had a slight palliative effect.

Gary Katz

Gary V. Katz
Toxicology Section
Health, Safety, and Human Factors Laboratory

GVK:bdo

"Contains NO CBI"

152988S

TX-83-15

Two Week Inhalation Toxicity of 2-Propoxyethanol

Toxicology Section

Written by: Gary V. Katz

August 15, 1983

Two Week Inhalation Toxicity of 2-Propoxyethanol

ABSTRACT

Male and female rats were exposed to vapor concentrations of 800, 400, 200, 100, or 0 ppm 2-propoxyethanol for two weeks. Additional groups were exposed to 800 or 0 ppm and their urine collected for analysis. Weight gain of all test animals was comparable to control values. Clinical signs of toxicity were red discolored urine on fecal tray under two of five males and three of five females after the first exposure to 800 ppm and two of five females after the second exposure. Red discolored urine was also seen on the fecal tray under one of five males after one exposure to 400 ppm. Red discolored urine was not seen after subsequent exposures in any group. Analysis of urine samples from the 800 ppm satellite group confirmed the presence of hemoglobinuria. Hematologic changes were seen at 800 and 400 ppm in males and females. Absolute and relative spleen weights were elevated in males (800 and 400 ppm) and in females (800 ppm). Gross and histopathologic examination revealed splenic changes in males and females exposed to 800 and 400 ppm. There were no compound related changes after exposure at 200 or 100 ppm for five days per week for two weeks. The primary site of toxicity was the red blood cell with secondary effects appearing in the spleen. The no-effect exposure concentration was 200 ppm.

Introduction

This study was designed to determine the short term effects of 2-propoxyethanol administered by inhalation over a two-week period in rats.

Methods

Groups of ten rats (5M, 5F) (COBS® CD® (SD) BR) were exposed by inhalation to target concentrations of 800, 400, 200, 100, or 0 ppm 2-propoxyethanol (2-PE) 6 hrs/day, 5 days/week for a total of 11 exposures. The LC_{50} (> 2100 ppm) had been previously determined (Report No. 104723Q). Additional groups of 10 rats (5M, 5F) were exposed to 800 or 0 ppm. Urine from these satellite groups was collected over a 16-hour period following nine of the eleven exposures and following a weekend break. The urine was examined using N-Multistix-C® Reagent strips for signs of hemoglobinuria. Other groups of animals were exposed at the same time for teratology and pulmonary function studies which have been reported elsewhere (Report Nos. 152987R, TX-83-14; and 152989T, TX-83-16, respectively).

Animals were exposed in 4200 L inhalation chambers. 2-PE was vaporized by passing dried, oil-free compressed air over the surface

of the liquid contained in a 3-neck flask which was heated slightly to aid evaporation. The vapors were diluted with fresh air prior to entering each inhalation chamber. Samples of chamber atmospheres were collected once each hour through Teflon® lines using an automated multipositional environmental sampling system. The samples were analyzed by gas chromatography. Periodic measurements of non-gaseous airborne material were made using a Royco® 5-channel particle analyzer. The animals cage positions were changed daily in a sequential manner.

Results and Comments

Over-all mean analytic concentrations ($\overline{X} \pm SD$) for the study were 786 ± 91, 406 ± 24, 206 ± 13, 103 ± 10, and 0 ppm. These compared favorably with target concentrations. Nominal concentrations (851 ± 47, 529 ± 22, 182 ± 33, and 67 ± 4 ppm) were determined volumetrically in large surface-area generating flasks and were therefore subject to wide variations. Over-all mean chamber temperatures and humidity for the five exposure concentrations varied from 20.6 - 22.5°C and 43 - 55% relative humidity.

Weight gain for males and females were comparable to their control values. A weight loss seen on day 10 in the 100 ppm group

resulted from a disconnected drinking water line. Clinical signs of toxicity were red discolored urine on fecal dropping trays from two of five males and three of five females after the first exposure to 800 ppm and two of five females after the second exposure. Red discolored urine was also seen on the dropping tray of one of five males after one exposure to 400 ppm. Red discoloration was not observed in these groups subsequent to the third exposure. Results of the test for hemoglobinuria (N-Multistix-C® Reagent strips) in satellite groups exposed to 800 or 0 ppm are presented in Table 1. Hemoglobinuria was observed in all males and females throughout the exposure to 800 ppm 2-PE. The incidence and severity of findings during the first week decreased daily but remained higher for females than males. With the exception of one male exposed to 800 ppm, there was no hemoglobinuria seen in any animal following the first weekend exposure break. However, the incidence again increased on days 6 and 11 which represented the first exposure following a weekend break. The urine of one male each exposed to 800 or 0 ppm were slightly positive on day 8. Microscopic analysis of urine samples revealed no compound related findings. Urinalysis was not performed on animals exposed to 400, 200, or 100 ppm.

Pale eyes, presumably resulting from anemia, were seen for one or two days in all five males and females exposed to 800 ppm. Pale

eyes were also seen in the five females in the 800 ppm satellite group, but not in the males. Sialodacryoadenitis unrelated to treatment was diagnosed in one control animal. Corneal opacity, seen in one female exposed to 200 ppm, was not considered compound related. No clinical signs of toxicity were observed in males exposed to 200 or 100 ppm or females exposed to 400, 200, or 100 ppm at any time.

Absolute and relative spleen weights of males were significantly elevated in a concentration dependent manner at 800 and 400 ppm. In females, the absolute and relative spleen weights were significantly elevated at 800 ppm only. Terminal body weight and absolute and relative liver, kidney, brain, heart, and testes and ovary weights were comparable among all groups within each sex.

Hematologic changes are summarized in Table 2. A slight increase in white blood cell count not exposure dependent was seen in males at 400 and 200 ppm. There was a concentration dependent decrease in red blood cell count which was significant at the 800 ppm level in males and at 800 and 400 ppm in females. Hematocrits were slightly, but not significantly, decreased in males and females exposed to 800 ppm. Reticulocytes were increased at 800 and 400 ppm in males and females. Mean corpuscular hemoglobin and mean corpuscular volume were slightly elevated in males and females

exposed to 800 and 400 ppm. All other parameters at 800 and 400 ppmm were comparable to control values. Hemoglobin concentration, hematocrit, red and white blood cell counts, red cell indices, differential white blood cell counts, and platelet and reticulocyte counts were comparable to control values at 200 and 100 ppm.

Clinical chemistries (asparate aminotransferase, alanine aminotransferase, alkaline phosphatase, urea nitrogen, creatinine, and soribtal dehydrogenase) were normal in both sexes at all concentrations. An increase in lactate dehydrogenase (100 ppm) and a decrease in glucose (100 and 800 ppm) in females were considered spurious.

A number of changes in cell morphology were observed. These included increased polychromasia, anisocytosis, macrocytosis, and Howell-Jolly Bodies in red cells from both sexes and stomatocytes in females. The number of animals showing these changes as well as the severity were concentration dependent and considered significant at 800 and 400 ppm for both sexes.

On gross examination, the spleens of two of five male rats exposed to 800 ppm were dark and granular. There were no compound-related gross pathologic changes observed in males exposed to 400, 200, or 100 ppm or in females exposed to 800, 400, 200, or 100 ppm.

Compound related histopathologic changes were seen in the spleens of males and females exposed to 800 or 400 ppm. These included minor splenic congestion, lymphoid hyperplasia, extramedullary hematopoiesis, and hemosiderin. No other compound-related effects were observed at 800 or 400 ppm in males or females. No compound related histopathologic effects were observed in males or females exposed to 200 or 100 ppm.

The hemolytic effects of propyl Cellosolve (the trade-mark name of Union Carbide and Carbon Corporation designating ethylene glycol monopropyl ether) were studied in previous work by Carpenter et al., 1956.[1] These authors exposed six female rats to 2-PE vapors. An erythrocyte osmotic fragility test was performed immediately after a four-hour exposure. Sixty-two ppm was found to be the lowest concentration causing significantly increased fragility while 32 ppm was the highest concentration causing no increased fragility. However, neither the method of generating the vapor atmosphere nor analyzing its concentration were described. Moreover, estimates of osmotic fragility relied on a method in which extent of hemolysis in test tubes was related to a change in hue detected visually.

---

[1] Carpenter, C.P., Possani, V.C., Weil, C.S., Nair, J.H., Keck, G.A. and Smyth, H.F., The toxicity of butyl Cellosolve solvent, A.M.A. Arch. Ind. Health, 14, 114, 1956.

In the present study, the site of toxicity of 2-PE is also the red blood cell with secondary effects appearing in the spleen. A no-effect level of 200 ppm was determined in this study. A red cell fragility test was not available for comparison with the Carpenter studies.

TABLE 1

Hemoglobinuria in Rats (Satellite Group) Following Inhalation Exposure to 800 ppm 2-Propoxyethanol

Exposure Conc. (ppm)	Number of Exposures 1*	2	3	4	**	6	7	8	9	11
800 (Males)	1[1] (M)[2] 4 (L)	1 (L)	1[3] (T)	0	1 (T)	3 (T) 1 (S)	0	1 (S)	0	1 (T) 2 (S) 2 (L)
0 (Males)	0	0	0	0	0	0	0	1 (T)	0	0
800 (Females)	5 (L)	5 (L)	3 (T,M,L)	2 (T,S)	0	2 (S,M)	0	0	0	1 (M) 3(L)
0 (Females)	0	0	0	0	0	0	0	0	0	0

*Samples were collected from the end of exposure to the following morning and represent urine excreted over an approximate 16 hour period.

[1] Number responding positive to Ames N-Multistix-C® reagent strip; N=5

[2] Severity of hemoglobinuria: T = trace, S = slight, M = moderate, L = strong

[3] N=4

**Urinalysis following a weekend

TABLE 2

Hematology Following Inhalation Exposure to 2-Propoxyethanol

	800 ppm		400 ppm		200 ppm		100 ppm	
	Males	Females	Males	Females	Males	Females	Males	Females
White Blood Cell Count	N	N	↑*	N	↑*	N	N	N
Red Blood Cell Count	↓*	↓*	N	↓*	N	N	N	N
Hematocrit	↓	↓	N	N	N	N	N	N
Reticulocytes	↑*	↑*	↑	↑*	N	N	N	N
Mean Corpuscular Volume	↑*	↑*	↑*	↑*	N	N	N	N
Mean Corpuscular Hemoglobin	↑*	↑*	↑*	↑*	N	N	N	N
Hemoglobin Concentration	N	N	N	N	N	N	N	N
Platelets	N	N	N	N	N	N	N	N
Mean Corpuscular Hemoglobin Concentration	N	N	N	N	N	N	N	N

*Significant ($p \leq 0.05$) increase (↑) or decrease (↓) from control values.

N=Comparable to control values.

"Contains NO CBI"

253001J
TX-89-91

A Subchronic Inhalation Study of Ethylene Glycol Monopropyl Ether in Rats Using a Functional Observational Battery and Neuropathology to Detect Neurotoxicity

By Lisa G. Bernard, A.A.S.

Toxicological Sciences Laboratory
Health and Environment Laboratories
Eastman Kodak Company
Rochester, NY 14652-3615

Date of Study Completion July 5, 1989

A Subchronic Inhalation Study of Ethylene Glycol Monopropyl Ether in Rats Using a Functional Observational Battery and Neuropathology to Detect Neurotoxicity

ABSTRACT

Groups of 10 male and 10 female rats were exposed to concentrations of 0, 100, 200, and 400 ppm ethylene glycol monopropyl ether (EP) 6 hours/day, 5 days/week for fourteen weeks. Parameters which were examined during the study included clinical signs and body weight gain. A Functional Observational Battery (FOB) was used to detect functional impairment of the nervous system four days prior to exposure to EP and at 4, 10, 32, 60, and 95 days after the initial exposure. The FOB consisted of an observational procedure to detect unusual responses in activity, coordination, behavior, and changes in sensory function. Forelimb and hindlimb grip strength were also quantitatively evaluated.

At the end of the exposure period, five male and five female rats from each group were fixed by intravascular perfusion and central nervous system (CNS) and peripheral nervous system (PNS) tissues were examined after staining with hematoxylin and eosin or Luxol Fast Blue and Bodian silver impregnation techniques. The PNS was also examined following plastic embedment and toluidine blue staining of the sciatic and tibial nerves. All 10 male and 10 female rats from each exposure group were necropsied and abdominal and thoracic organs were examined for macroscopic lesions and brain, liver, kidney, and spleen weights were measured.

Clinical signs indicative of irritation due to EP consisted of red discoloration of facial hair, porphyrin nasal discharges and tears, and sialorrhea in rats exposed to 200 or 400 ppm EP and red discolored facial hair only in female rats exposed to 100 ppm.

At exposure concentrations of 200 and 400 ppm, males and females exhibited signs of red blood cell damage including red discolored urine, pigment deposition in the kidneys and Kupffer cells of the liver, and increased amounts of pigment in the spleen. Spleen weights were biologically significantly increased for the 400 ppm male and female groups, reaching statistical significance only for the unperfused female group. These results are similar to those reported following exposure to the same concentrations of EP in a previous fourteen-week study (Report TX-86-216). One female rat exposed to 100 ppm EP exhibited a single incidence of red discolored urine, as did one control male. This single incidence of red urine at the 100 ppm level was not considered compound-related.

ABSTRACT CONT.

The mean liver weights of perfused and unperfused female rats exposed to 200 or 400 ppm EP, were slightly heavier than those of the control groups. Kidney weight changes observed at 400 ppm in unperfused male rats and in perfused female rats, were considered to be a reflection of slightly lower mean terminal body weights, rather than a direct toxic effect.

At exposure levels which were systemically toxic to male and female rats, no neurologic deficits in motor or sensory function were detected. Neuropathological lesions were not observed in either the CNS or PNS of rats exposed to 400 ppm EP for fourteen weeks.

The no-observed-effect level for neurological effects, was greater than 400 ppm, the highest level tested. A site of toxic action was the red blood cell, with secondary involvement of the spleen, liver, and kidneys. The NOEL for toxicity was 100 ppm based upon the lack of evidence of red blood cell effects or liver weight changes.

A Subchronic Inhalation Study of Ethylene Glycol Monopropyl Ether in Rats Using a Functional Observational Battery and Neuropathology to Detect Neurotoxicity

PURPOSE

The purpose of this study was to evaluate the neurotoxic potential of 2-propoxyethanol (EP) in rats when rats were exposed to EP by inhalation for fourteen consecutive weeks.

TEST FACILITY

Toxicological Sciences Laboratory, Health and Environment Laboratories (HAEL), B-320, Kodak Park, Eastman Kodak Company, Rochester, NY 14652-3615

SPONSOR

Eastman Chemicals Division, Eastman Kodak Company, Kingsport, TN

TEST ARTICLE CHARACTERIZATION

General Description

Test Article Name:	Ethylene Glycol Monopropyl Ether
Synonyms:	EKTASOLVE® EP, 2-propoxyethanol, EP
CAS No.:	2807-30-9
EK Accession No.:	907124
HAEL No.:	88-0017
Source of Test Article:	Texas Eastman Company
SRID or Lot No.:	T62-15(1-19-88)
Experiment No.:	880017I1 (males) 880017I2 (females)

Physicochemical Properties

Vapor pressure:	1.3 (mm Hg at 25°C)
Flash Point:	49°C (Setaflash CC)
Boiling point (°C):	149.5
Specific gravity (water = 1):	0.908 at 73°F (23°C)
Molecular weight:	104.15
Molecular formula:	$C_5H_{12}O_2$

Test Article Purity and Stability

The test article was analyzed for purity both prior to and after the in-life phase of the study using gas chromatography with flame ionization detection. The purity of the test article was 99.9 and 99.8% EP prior to and upon completion of the study, respectively.

Structural Confirmation

The test article was analyzed for structure confirmation using gas chromatography/mass spectroscopy with electron impact ionization prior to and upon completion of the study. Results indicated a structure consistent with that of EP.

The purity and structure confirmation analyses were performed by the Chemical Quality Services Division, KP. The reports of the purity analyses and structure confirmation are provided in the Appendix (pp. 198-199).

Storage Conditions

The test article was stored at ambient conditions in a sealed 55 gallon drum supplied by the sponsor. The drum was stored in an inhalation chamber (C-06), which was maintained at a slight negative pressure, relative to room pressure.

TEST SYSTEM

Animals

Male and female weanling rats (CD®(SD)BR) were purchased from Charles River Laboratories, Kingston, NY. Animals were observed for eight days prior to the pre-exposure Functional Observational Battery (FOB) (Day -4). At the start of the study, male rats and female rats were approximately seven weeks of age. Animals weighed (mean ± SD) 236 ± 6 g (males) or 177 ± 8 g (females) on the day of the pre-exposure FOB. Females were nulliparous and nonpregnant.

Ten male and ten female rats were assigned to each of three test groups and one control group. Sprague-Dawley rats were chosen for this study because they are a common representative species for toxicity studies and because this strain has been reliably used for neurotoxicity testing in the past (Principles And Methods For Assessment Of Neurotoxicity Associated With Exposure To Chemicals, World Health Organization, 1986).

Housing

Rats were housed singly during exposure and nonexposure periods in multicompartmented stainless steel wire mesh cages. Males and females were housed on the same rack. The study was conducted in the vivarium area of Building 320. The animal room in which the rats were housed during nonexposure periods was maintained at 70-75°F and 41-58% relative humidity. A photoperiod of 12 hours from 6 a.m. to 6 p.m. was maintained. No other studies were housed in the same room as this study. Cages and racks were washed once per week. Absorbent paper under the cages was changed daily.

Feed and Water

Certified Rodent Diet (Agway® Prolab™ RMH 3000) was available ad libitum during nonexposure periods. Feeders were cleaned weekly. Water was supplied ad libitum through an automatic watering system. The source of the water was the Monroe County Water Authority, and is analyzed quarterly. Neither the feed nor water contained known contaminants that would be expected to interfere with the outcome of this study.

Identification

All rats were identified by uniquely numbered metal ear tags. Missing ear tags were promptly replaced.

Randomization

All culling and randomization was done by computer-generated lists using the Automated Animal Toxicology System.

STUDY DESIGN

Exposure Conditions

Three test groups and a control group were exposed to graded concentrations of EP, or conditioned air by inhalation. The inhalation route of administration was used since it is a primary route of human exposure and was used in previous toxicity studies on EP.

The target concentration levels were 0, 100, 200, and 400 ppm of EP. These concentration levels were selected based upon a previous 14-week study, in which toxicity was seen at the 400 and 200 ppm levels.

Whole body exposures were conducted in 4.2 m^3 stainless steel and glass inhalation chambers. For each exposure concentration, males and females were exposed in the same inhalation chamber. Exposures were of six hours duration, five days per week including holidays, for fourteen weeks. Animals were not exposed to the test article on days the FOB was performed. Animals were necropsied over a three day period and were exposed through the day prior to necropsy, for a total of 66 to 68 exposures.

The chambers were maintained under negative pressure (0.5 inch water) and at 12 air changes per hour. Distribution of test material was determined prior to the study start by measurement from key cage positions throughout each chamber.

Liquid EP was metered with a pump into a glass bead-packed column where it vaporized and was carried to the inhalation chamber. Heat was applied to the column to enhance vaporization. Chamber vapor concentrations of EP were quantitated by infrared spectroscopy. Concentrations were monitored about ten times during each exposure from fixed reference positions.

Temperature, humidity, and chamber air flow rate were monitored every half hour during the exposure. Chamber air flow rate was calibrated weekly during the study. Nominal concentrations were determined daily.

The concentration of background nongaseous material was measured once per week in the high concentration chamber relative to the air control chamber to ensure that exposures were to a vapor and not an aerosol.

A complete description of EP vapor generation, sampling, and analysis is presented in the Appendix (pp. 127-134).

Body Weight Determinations

Body weights were collected weekly on Study Days -4 (pre-exposure), 0, 4, 7, and at least weekly thereafter.

Clinical Observations

Each rat was examined prior to the start of the study, and was culled if found unfit. On days when the FOB was not performed, cage-side observations were conducted for mortality, moribundity, and urine and fecal deposits at about 8 a.m. by a trained technician. Each rat was removed from its cage at about 3 p.m. and examined for clinical signs of toxicity, following exposure. Clinical observation included, but was not limited to, examination of the hair, skin, eyes, respiratory, circulatory and central nervous systems, motor activity, feces, urine, and behavior pattern. Rats were periodically observed through chamber windows for signs of toxicity during exposure. On weekends, the animals were checked for mortality.

When the FOB was performed, a comment was entered into the clinical observation record indicating that the battery was performed that day.

Functional Observational Battery (FOB) Schedule

The battery was performed on all animals pre-treatment (Day -4), and 4, 10, 32, 60, and 95 days after the initial exposure. Quantitative grip strength was determined each time the FOB was performed. The procedures used for the conduct of the battery are described in the Appendix (pp. 1-13). Male and female groups were started one week apart because of the time constraints for performing the FOBs and perfusions. The FOB was performed with the observer blind to the treatment received by the animals.

The Functional Observational Battery (FOB) was designed to comply with EPA guidelines (40 CFR Part 798.6050, as published on September 27, 1985 and amended May 20, 1987). The neurological examination was designed to include recommendations made by Irwin (1968), Marshall et al. (1971), Deuel (1977), and Gad (1982). The battery includes observational procedures to detect any unusual responses with respect to body position, activity level, coordination of movement, and gait, as well as any unusual or bizarre behavior or the presence of convulsions, tremors, increased levels of lacrimation, increased levels of salivation, piloerection, pupillary dilatation or constriction, unusual respiration, diarrhea, excessive or diminished urination or vocalization, changes in forelimb/hindlimb grip strength, or changes in sensory function.

Positive Control Data for the Functional Observational Battery

Historical positive control data were used to demonstrate the sensitivity of the FOB.

Necropsy

At the end of the exposure period, 10 rats (5 males, 5 females) from each group were perfused systemically for neuropathologic examination. Because systemic perfusion alters organ color, shape, and texture, the remaining animals were necropsied without perfusion. This allowed for a general pathology examination to detect systemic toxicity outside of the nervous system which could account for functional effects. Brain, kidneys, liver, and spleen were weighed and collected from both perfused and unperfused animals, but the mean weights were analyzed separately depending on the method of fixation.

Tissues selected from perfused animals for neuropathology analysis included cross sections through the forebrain, cerebrum, midbrain, cerebellum, pons, medulla oblongata, cervical spinal cord swelling, lumbar spinal cord swelling, cervical and lumbar dorsal root ganglia, dorsal and ventral spinal roots (cervical and lumbar), sciatic nerve at mid-thigh, and tibial nerve including branches to the calf musculature.

Animals designated for neuropathology examination were anesthetized with sodium pentobarbital containing heparin (10% by volume) and perfused through the ascending aorta. Perfusates were 4% paraformaldehyde followed by 5% glutaraldehyde both in 0.1 M phosphate buffer, pH 7.4. Following perfusion, the brain was removed from the cranium, the spinal cord was exposed by dorsal laminectomy, and both sciatic-tibial nerves were removed from the hindlimbs. Tissues for plastic embedment were fixed an additional period of at least 2 hours in glutaraldehyde, at 4°C. Tissues from perfused animals not destined for plastic embedment and all tissues from unperfused animals were fixed in 10% neutral buffered formalin.

High concentration and control tissues from perfused animals were processed by routine neuropathological techniques for paraffin embedment, hematoxylin-eosin staining, and light microscopic examination. Special stains (a combined Luxol Fast Blue Stain-Bodian silver protargol impregnation) were performed on perfused neural tissue from the high concentration and control groups. The left sciatic-tibial nerve and medulla oblongata from perfused high concentration and control groups were further fixed in an osmium tetroxide solution (Dalton's chrome-osmium solution), embedded in plastic (EPON), sectioned at 1 μm, stained with toluidine blue, and examined by light microscopy. For storage, perfused tissues were transferred to 10% neutral buffered formalin.

The same tissues collected from perfused animals were collected from unperfused animals. These tissues were fixed and stored in 10% neutral buffered formalin.

STATISTICAL PROCEDURES

Mean values with standard deviations were calculated where appropriate. Data were evaluated using the following computer generated statistical tests where appropriate: Bartlett's test ($p \leq 0.01$), one-way analysis of variance (ANOVA, $p \leq 0.05$), and Duncan's multiple range test ($p \leq 0.05$). Prior to conducting statistical analyses on counts of defecations, urinations, and vocalizations, the data were transformed by addition of 0.5 to each count, and then calculation of the square root of the sum. This transformation was performed to make the variances independent of the means. (Sokol and Rohlf, 1969; Daniel, 1978)

DATA ANALYSIS FOR THE FUNCTIONAL OBSERVATIONAL BATTERY

The findings of the FOB and clinical signs observed at other time periods, were evaluated in the context of preceding and/or concurrent toxicity studies and correlative necropsy and histopathological findings. The evaluation included the relationship between concentrations of the test substance and the presence or absence, incidence, and severity of any neurotoxic effect. Often, the pattern of observed behavioral effects is a much more important indicator of neurotoxicity than the presence or absence of statistical significance.

Following inspection of the FOB results for behavioral signs which appeared to differ when the EP-dosed groups were compared to the controls, statistical analyses on the apparent differences were compared using contingency table methods and Dunnett's test, modified for proportions. Loglinear models were fit to the three-way contingency tables and significant effects were determined. Both goodness of fit and statistical significance ($p \leq 0.05$) were determined. If significant dose-behavior interactions were detected, then Dunnett's test (one-tail) was used to compare control incidence to the treatment group incidence at each FOB observation time. If interactions in some table were of interest or were close to the significance level, but yet not significant, Dunnett's test was used to examine these interactions as well.

REGULATORY COMPLIANCE

Test Guidelines

This study was conducted by procedures comparable to the Toxic Substances Control Act Test Guidelines (Environmental Protection Agency, September 27, 1985) and; Guidelines for Testing of Chemicals: TG-413, Subchronic Inhalation Toxicity: 90-Day Study (Organization for Economic Cooperation and Development, May, 1981) and; Annex V: Subchronic 90-Day Repeated Dose Inhalation Study (European Economic Community, Notification of New Substances Regulations, 1982). The Functional Observational Battery and neuropathology were designed to comply with Environmental Protection Agency guidelines (40 CFR Parts 798.6050 and 798.6400 as published on September 27, 1985, and amended May 20, 1987).

GLP Compliance

This study was also conducted according to Good Laboratory Practice for Nonclinical Laboratory Studies as promulgated by the Food and Drug Administration, 21 CFR Part 58, December 22, 1978, and Environmental Protection Agency Good Laboratory Practice Standard 40 CFR Part 792, November 29, 1983. This study was conducted in accordance with OECD Principles of Good Laboratory Practice. Inspections were performed by Eastman Kodak Company Quality Assurance Units, to determine compliance of all phases of this study with existing regulations and generally accepted good laboratory practices. All protocol amendments were signed and dated by the Study Director.

The final report, tissues, paraffin blocks, slides, data sheets, and all nonperishable raw data will be stored in the HAEL archives. Perishable raw data will be retained as long as useful.

PROJECT PARTICIPANTS

Study Director	G. V. Katz, Ph.D.
Principal Investigator (Inhalation)	E. R. Renner, Jr., B.A.
Principal Investigator (FOB)	L. G. Bernard, A.A.S.
Pathologist	M. S. Vlaovic, D.V.M., Ph.D.
Consulting Neuropathologist	J. L. O'Donoghue, V.M.D., Ph.D.
Laboratory Animal Medicine	G. J. Hankinson, D.V.M., M.S.
Analytical Chemist	K. A. Robillard, Ph.D.
Consulting Statistician	M. L. Ritter, M.S.
Report Author	L. G. Bernard, A.A.S.

EXPERIMENT DATES

Date of Study Initiation

April 11, 1988

Experiment Start Date

880017I1 (males)	April 14, 1988
880017I2 (females)	April 21, 1988

Exposure Start Date

880017I1 (males)	April 18, 1988
880017I2 (females)	April 25, 1988

PROTOCOL AND SOP DEVIATIONS

A density of 0.913 g/mL was used for calculation of concentration instead of a value of 0.908 g/mL, which is the density given in the Material Safety Data Sheet. This is a difference of only 0.6% therefore, the difference in concentration was negligible and no corrections were made.

There were no other protocol or Standard Operating Procedure deviations.

RESULTS

Mortality

No mortality occurred during the study.

Exposure Conditions

The analytical concentrations of the EP vapor for the 100, 200, and 400 ppm exposure groups were (mean ± SD) 100±7, 203±7, and 402±7 ppm for male groups and 100±5, 202±7, and 402±6 ppm for female groups, respectively. The nominal concentrations were 111±4, 195±10, and 392±9 ppm for male groups and 111±3, 197±11, and 391±9 ppm for female groups.

Overall mean chamber temperature and relative humidity varied from 22.0 to 22.5°C and 54.0 to 63.9%, respectively. Particle count data indicated that an aerosol of the test material was not present.

A summary of chamber exposure conditions is presented in the Appendix (pp. 125-126)

Clinical Signs

No clinical abnormalities were observed during exposure for males or females in any group.

Red discolored urine was observed for three female rats shortly after the first exposure to 400 ppm EP, for all male and female rats on the next day prior to the second exposure to 400 ppm EP, and then generally once each week thereafter in 1-3 rats. Red discolored urine was observed less frequently and in fewer animals in the 200 ppm male and female groups. One female rat from the 100 ppm group exhibited red discolored urine on a single occasion as did a single control male (Rat-2); the control animal also exhibited bilateral hydronephrosis. Red discolored urine was generally seen following the first exposure after a weekend without EP exposure (Incidences are described in Appendix pp. 150) except in the 100 ppm and control animals. These results are consistent with those reported following exposure to the same concentrations of EP in a previous fourteen-week study (Report TX-86-216).

Other compound-related clinical signs in males consisted of red discoloration of the facial hair, porphyrin nasal discharges, porphyrin tears, and sialorrhea. Discoloration of facial hair was seen from one to six times in four 200 ppm animals and two 400 ppm animals. Single incidences of porphyrin nasal discharges were seen in three 400 ppm animals and a single incidence of porphyrin tears in one 400 ppm animal. Three or four incidences of sialorrhea were observed in two 400 ppm animals. These clinical signs were probably a response to the irritation caused by the inhalation of EP. No other clinical abnormalities were observed for males from any exposure level.

Other compound-related clinical signs in females consisted of red discoloration of the facial hair, porphyrin nasal discharges, sialorrhea, and lacrimation. A single incidence of red discoloration of facial hair was observed in one control. Discoloration of facial hair was observed once to five times in 9 females exposed to 100 ppm and 8 females exposed to 200 ppm and 1 to 13 times in 4 females exposed to 400 ppm. Porphyrin nasal discharges were seen twice each in single females from the 200 and 400 ppm groups. A single incidence of sialorrhea was observed for a 200 ppm female, and one female from the 400 ppm group was seen to have sialorrhea on seven occasions. A single incidence of lacrimation was observed for the 400 ppm group. These clinical signs were probably a response to the irritation caused by the inhalation of EP.

Orange discoloration of abdominal hair observed in one female from the 400 ppm group was probably related to staining with red urine.

A wound in a single 200 ppm female rat was unrelated to exposure.

Alopecia was observed in 1 male from the control group, 1 male from the 200 ppm group,4 males from the 400 ppm group, 2 females from the control group, 3 females from the 100 ppm group, and 2 females from the 200 ppm group. These clinical abnormalities were not considered compound-related.

Tables showing the incidences of clinical abnormalities are included in the Appendix to this report (pp. 135-149)

Body Weight

Mean body weights of male and female animals exposed to 400 ppm EP were slightly lower than those of the control groups. At no time during the study were these difference statistically significant. Mean body weights of male and females animals exposed to 100 or 200 ppm EP were comparable to those of the control groups. Body weight data are presented in the Appendix to this report (pp. 151-160).

Functional Observational Battery

The FOB examinations performed on all animals prior to the first exposure to EP and all FOB examinations on all control animals throughout the study were unremarkable. With repeated application of the FOB, habituation to sensory stimulation developed in control and EP-treated rats and response rates were changed as animals tended to pay less attention to stimuli which were initially novel. As an example, the olfactory orientation response rate was initially high, but with repeated exposure to stimuli, the rats paid less attention to the scent and tended not to orient toward or seek to explore it as frequently. This type of behavior change with time is expected and does not indicate an abnormal change in animal behavior.

Statistically significant differences in behavior were observed for the EP-treated animals when compared to the control animals. These differences appeared to be random in nature. They were not related to exposure level and did not correlate with increasing exposure time.

STATISTICALLY SIGNIFICANT DIFFERENCES DETECTED DURING FOB EXAMS			
EXPERIMENT # 880017I1 [MALES]	100 PPM	200 PPM	400 PPM
VISUAL ORIENTATION			
DOES NOT ORIENT TOWARD OBJECT	*	*	
RAT ORIENTS TO OBJECT BUT ONLY AFTER OBJECT IS WELL INTO VISUAL FIELD		*	
AUDITORY ORIENTATION			
ORIENTS TO SOUND	*	*	
PINNA TOUCH			
RESPONSE TO TOUCH	*		
APPROACH RESPONSE			
NO REACTION	*		*
RAT SLOWLY APPROACHES AND SNIFFS AT OBJECT			*
KEY: * = STATISTICALLY DIFFERENT FROM CONTROLS ($p \leq 0.05$), ONE-WAY DUNNETT'S T-TEST			

Visual orientation by the 100 and 200 ppm male group occurred at a lower rate than for the other males. In general, the control and 400 ppm male groups did not appear to habituate to the visual stimulus to as large a degree as the 100 and 200 ppm male groups. A statistically significant increase in no response occurred during the Day 10 and Day 95 FOBs for the 100 ppm male group and during the Day 10, Day 32, and Day 95 FOBs for the 200 ppm male group.

Auditory orientation was significantly lower for the 100 (1 of 10) and 200 ppm (1 of 10) male group at Day 95 when compared to the controls (6 of 10).

On Day 32, the pinna response for the 100 ppm male group was statistically significantly reduced (2 of 10) when compared to the control animals (7 of 10).

The usual response to approach by a probe consists of the animal slowly approaching and sniffing the probe or no reaction to probe. For males at the pre-exposure FOB, a statistically significantly higher incidence of no reaction was observed for the 100 (5 of 10) and 400 ppm (7 of 10) groups when compared to the controls (0 of 10). On Day 32 for the 400 ppm male group, the incidence of slowly approaching and sniffing the probe was significantly lower (0 of 10) when compared to the controls (4 of 10). On Day 60, for the 400 ppm male group, the incidence of slowly approaching and sniffing the probe was significantly lower for the 400 ppm male group (1 of 10) when compared to the controls (6 of 10), and the incidence of no reaction was significantly higher (9 of 10) when compared to the controls (4 of 10).

STATISTICALLY SIGNIFICANT DIFFERENCES DETECTED DURING FOB EXAMS				
EXPERIMENT # 880017I2	[FEMALES]	100 PPM	200 PPM	400 PPM
TOUCH RESPONSE				
RESPONSE TO TOUCH		*	*	*
HANDLING BEHAVIOR				
NORMALLY ALERT				*
ATTEMPTS TO ESCAPE, MAY VOCALIZE OR BITE				*
APPROACH RESPONSE				
NO REACTION		*		
RAT SLOWLY APPROACHES AND SNIFFS AT OBJECT		*	*	
RAT PULLS AWAY SLIGHTLY		*		
KEY: * = STATISTICALLY DIFFERENT FROM CONTROLS ($p \leq 0.05$), ONE-WAY DUNNETT'S T-TEST				

The incidence of responses to touch was significantly lower for the 200 ppm female group at Day 4, the 400 ppm female group at Day 10, and the 100 ppm female group at Day 95 and was significantly lower for the 400 ppm female group at Day 60.

During the Day 95 FOB, the 400 ppm female group had fewer ($p \leq 0.01$) animals which were considered normally alert during handling (6 of 10), but also had a higher incidence ($p \leq 0.05$) of animals which attempted to escape (3 of 10) when compared to the controls where 10 of 10 animals were normally alert and none attempted to escape.

Statistically significant changes observed in response to approach by a probe for females at the pre-exposure FOB, consisted of the 100 ppm female group having a higher incidence of no reaction to the probe (5 of 10) and a lower incidence of approaching and sniffing the probe (3 of 10) and the 200 ppm female group having a lower incidence of approaching and sniffing the probe (1 of 10) and a higher incidence of pulling away slightly (3 of 10) when compared to the controls, where 9 of 10 rats approached and sniffed the probe. On Day 10, the 200 ppm female group had a statistically significant higher incidence of slowly approaching and sniffing the probe (10 of 10) when compared to the controls (5 of 10).

A number of FOB differences approached but did not attain statistical significance. None of these observations were biologically revelant but all are described in the statistician's report along with the FOB data in the Appendix (pp. 118-120).

Quantitative Grip Strength

There were no statistically significant differences in mean forelimb or mean hindlimb grip strength between the treatment and control groups during the study. Grip strength data are presented in the Appendix to this report (pp. 121-124).

Organ Weights and Terminal Body Weights

Mean terminal body weights of perfused male rats were comparable among all groups. Mean terminal body weights of unperfused male rats at all concentrations of EP were lower than that of the control group, although the differences were not statistically significant and not in an exposure-related pattern.

Mean terminal body weights of perfused female rats at all concentrations of EP were lower than that of the control group. No clear exposure-related pattern or statistically significant difference were seen. Mean terminal body weights of unperfused female rats were comparable among all groups.

Mean absolute and relative (to body weight) spleen weights for unperfused females exposed to 400 ppm were statistically significantly increased when compared to the control group. The mean absolute and relative spleen weights for the other 400 ppm animals (the perfused female rats and the perfused and unperfused male rats) were biologically significantly higher than that of the control groups. No treatment-related spleen weight changes were observed for the perfused and unperfused animals, male and female, at the 200 and 100 ppm exposure levels.

Mean absolute and relative liver weights of perfused and unperfused female rats exposed to 400 or 200 ppm EP were slightly heavier when compared to the control group, although the differences were not statistically significant. Mean absolute and relative liver weights of perfused and unperfused female rats exposed to 100 ppm EP and of perfused and unperfused male rats exposed to 400, 200, or 100 ppm EP were comparable to that of the control groups.

The mean relative, but not absolute, kidney weight of unperfused male rats and the mean absolute and relative kidney weights of perfused female rats exposed to 400 ppm EP were slightly, but not statistically significantly elevated when compared to the control groups. These weight changes may be a reflection of the slightly lower mean terminal body weight seen in these animals. Mean relative and absolute kidney weights of the 200 and 100 ppm unperfused male and of the 400, 200, and 100 ppm perfused male rats were comparable to that of the control groups. Mean relative and absolute kidney weights of the 200 and 100 ppm perfused female and of the 400, 200, and 100 ppm unperfused female rats were comparable to that of the control groups.

Mean absolute and relative brain weights of perfused and unperfused male and female rats at all EP exposure levels were comparable to the control groups.

Terminal body weight and organ weight data are listed in the Appendix to this report (pp. 161-164).

Pathology

No treatment-related gross pathology or neuropathology changes were observed for any animals exposed to EP.

Treatment-related changes consisted of hemosiderosis in the Kupffer cells of the liver at 400 (4/5-males, 5/5-female) and 200 ppm (3/5-males, 5/5-female), hemosiderosis in the proximal convoluted renal tubules at 400 (3/5-males, 5/5-female) and 200 ppm (5/5-males, 5/5-female), and increased severity of hemosiderosis in the splenic red pulp at 400 (5/5-males, 5/5-female) and 200 ppm (5/5-males, 4/5-female). Hemosiderin was identified, in hematoxylin-eosin stained sections, as a golden globular pigment in the kidneys and Kupffer cells of the liver, of both male and female rats exposed to 200 or 400 ppm of the test material. The most likely source of the pigment was from increased red blood cell destruction and metabolism of heme pigments in the kidneys and liver. The spleen, which normally contains hemosiderin, had increased amounts present in male and female rats exposed to 200 and 400 ppm of the test material. No cellular degeneration was associated with pigment deposition. No other treatment-related histopathological changes were observed for males and females from the 400 and 200 ppm groups.

No treatment-related histopathological changes were observed for males and females from the 100 ppm group.

The pathologist's report is provided in the Appendix (pp. 165-166).

DISCUSSION AND INTERPRETATION

No neurologic deficits in motor or sensory function were detected in animals exposed to 0, 100, 200, or 400 ppm EP when examined using a Functional Observational Battery (FOB). Some statistically significant differences in behavior, or, responses which approached statistical significance were observed for the EP-treated rats when compared to the control rats. However, these differences appeared to be random in nature, they did not appear to be related to exposure levels, they were not consistently seen over time, and they did not correlate with lengthening of the exposure period.

Microscopic examinations of nervous tissues following paraffin embedment and hemotoxylin-eosin or special staining, and on the medulla oblongata and peripheral nerves following plastic embedment and toluidine blue staining, revealed no neuropathological lesion for the animals exposed to 0 or 400 ppm EP.

No mortality or adverse effects on growth were observed for male or female rats exposed to 400, 200, or 100 ppm EP. The primary effect of exposure to EP was involved red blood cells.

Red discolored urine was observed in all male and female rats after the first exposure to 400 ppm EP. Red discolored urine was observed far less frequently and in fewer male and female rats after exposure to 200 ppm. One female rat exposed to 100 ppm EP exhibited a single incidence of red discolored urine, as did one control male. This single incidence of red urine at the 100 ppm level was not considered compound-related. The red discolored urine was generally seen on the morning following the first exposure after a weekend without EP exposure, but generally diminished in incidence and frequency with time. In a previous study (TX-86-216), where animals were exposed to 200 and 400 ppm, the red discolored urine was shown to be hemoglobin.

Spleen weights were biologically significantly increased for the 400 ppm male and female groups, reaching statistical significance only for the unperfused females. Liver weights of perfused and unperfused female rats exposed to 200 or 400 ppm EP, were slightly heavier than was observed with the control groups. Pigmentation deposits of hemosiderin were observed in the spleen, liver, and kidneys of animals exposed to 400 and 200 ppm EP. Both hemoglobinuria and hemosiderin deposits are common findings in animals exhibiting increased red blood cell turnover. There were no gross or histopathologic effects of EP to suggest any of these organs as primary sites of toxicity.

The appearance of red discoloration of facial hair, porphyrin nasal discharges and tears, and sialorrhea in rats exposed to 400 or 200 ppm EP and red discoloration of facial hair observed only in females exposed to 100 ppm EP were suggestive of irritation rather than toxicity due to EP exposure.

It is concluded that EP does not cause neurologic effects at vapor concentrations that result in red blood cell effects. The no-observed-effect-level (NOEL) for neurological effects was greater than 400 ppm EP, the highest level tested. The NOEL for red blood cell effects was 100 ppm EP.

SIGNATURE PAGE

Lisa Gayle Burnett — 6-30-89
Report Author — Date

Gary Kay — 7-5-89
Study Director — Date

Paul C Tapp — 7/5/89
Unit Director, Mammalian Toxicology Section — Date

M. L. James — 6/30/89
Quality Assurance Coordinator — Date

John T. O'Dwyer — 6/30/89.
Director, Toxicological Sciences Laboratory, HAEL — Date

Q.A. INSPECTION STATEMENT
(CFR 58.35(B)(7) 792.35(B)(7) 160.35(B)(7))

STUDY: 88-0017-1 STUDY DIRECTOR: KATZ,G.V.
ACCESSION NUMBER: 907124

06/26/89

STUDY TYPE: NEUROTOXICITY

M. James (AUDITOR, QUALITY ASSURANCE UNIT) 6/30/89 DATE

THIS STUDY WAS INSPECTED BY 1 OR MORE PERSONS OF THE QUALITY ASSURANCE UNIT OF THE HAEL, EASTMAN KODAK COMPANY, ROCHESTER, N.Y. AND WRITTEN STATUS REPORTS WERE SUBMITTED ON THE FOLLOWING DATES:

INSPECTION DATES	PHASE(S) INSPECTED	STATUS REPORT DATES
04/11/88	PROTOCOL SUBMISSION	
04/14/88	FUNCTIONAL OBSERVATIONAL BATTERY TESTING QUANTITATIVE MEASUREMENT OF GRIP STRENGTH TESTING PRE-EXPOSURE FOB - MALES	
04/21/88	PROTOCOL AMENDMENT WEIGHT RANGE CHANGED FOR MALE RATS	
04/21/88	TEST SYSTEM WEIGH, CULL, AND RANDOMIZE TO HOUSING CHAMBER CONCENTRATION ANALYSIS INHALATION EXPOSURE OF MALE RATS ONLY CHAMBER TEMPERATURE AND HUMIDITY - MALE RATS CULL OF FEMALE RATS	
04/25/88	PROTOCOL AMENDMENT CHANGE TO CLINICAL OBSERVATIONS SECTION	
05/09/88	TEST SYSTEMS WEIGHTS CLINICAL SIGNS PRE-DOSE	
07/22/88	FUNCTIONAL OBSERVATIONAL BATTERY TESTING QUANTITATIVE MEASUREMENT OF GRIP STRENGTH TESTING SOP AND TRAINING RECORDS REVIEW 95 DAY FOB - MALE RATS	07/22/88
07/27/88	PERFUSION NECROPSY SPECIMEN COLLECTION SPECIMEN PREPARATION SPECIMEN/SAMPLE WEIGHT MALE RATS	
07/29/88	FUNCTIONAL OBSERVATIONAL BATTERY TESTING QUANTITATIVE MEASUREMENT OF GRIP STRENGTH TESTING DAY 95 FOB - FEMALE RATS	08/01/88
08/03/88	PERFUSION NECROPSY SPECIMEN COLLECTION SPECIMEN LABELLING FEMALE RATS	08/03/88
11/01/88	FINAL REPORT REVIEW FOB TABLES REVIEWED	
11/02/88	FINAL REPORT REVIEW	
11/03/88	FINAL REPORT REVIEW	
11/04/88	FINAL REPORT REVIEW	11/04/88

Q.A. INSPECTION STATEMENT
(CFR 58.35(B)(7) 792.35(B)(7) 160.35(B)(7))

STUDY: 88-0017-1 STUDY DIRECTOR: KATZ,G.V.
ACCESSION NUMBER: 907124

06/22/89	FINAL REPORT REVIEW	
06/23/89	FINAL REPORT REVIEW	
06/26/89	FINAL REPORT REVIEW	06/27/89

QUALITY ASSURANCE INSPECTION STATEMENT

HAEL Study:
Requestor: E. Renner
Auditee Group & Location: EAS/CQSD; Bldg. 320
Accession #: 907124
In-Process Inspection Date:
CQS Job #: EE8H014
HAEL #: 88-0017
Date Sample(s) Received in CQS: 04-07-88
Date This Report Sent To Analytical Director: 04-26-88

Request for Analysis #	Analysis	Test Report Date	Test Report Inspection Date
131140	Pur., Struct.	04-20-88	04-26-88

We have inspected the analytical work described above in accordance with 40 CFR 792.35(b)(3). Our findings and a summary of corrective actions, if necessary, have been sent to the supervisor of the analytical laboratory and to management in accordance with Good Laboratory Practice Standards 40 CFR 792.35(b)(6) and 21 CFR 58.35(b)(3).

M. J. Boccacino, Quality Engineer
P Compliance, QSO/QSS

ANALYTICAL QUALITY ASSURANCE INSPECTION STATEMENT

H [illegible] #: 88-0017 Accession #: 907124 CQS Job #: EE8H014

HAEL Study: *
Study Director: E. Renner, W. Krasavage, G. Katz
Auditee Group & Location: EAS/CQS, B-320
In-Process Inspection Date: ---
Date This Report Sent To Study Director: 09-13-88

Request for Analysis #	Analysis	Sample(s) Received Date	Test Report Date	Test Report Inspection Date
131144 & 126659	Purity & Struct. Conf	8/04-8/08/88	08-11-88	09-13-88

We have inspected the analytical work described above. Our findings have been sent to the study director and to management. This is done in accordance with Good Laboratory Practice Standards 40 CFR 792.35 and 160.35, and 21 CFR 58.35.

M. J. Boccacino, Quality Assurance Engineer
[illegible] Compliance, QSO Quality Assurance
09-13-88

Table of Contents for Appendix

	Appendix Page
Functional Observational Battery Procedure	1
Quantitative Grip Strength Measurement Procedure	10
Group Summary of Male FOB Examinations	14
Group Summary of Female FOB Examinations	42
Individual Male FOB Examination for:	
Pre-exposure (Day -4)	70
Day 4	74
Day 10	78
Day 32	82
Day 60	86
Day 95	90
Individual Female FOB Examinations for:	
Pre-exposure (Day -4)	94
Day 4	98
Day 10	102
Day 32	106
Day 60	110
Day 95	114
Statistical Analysis of FOB Observations	118
Bargraph of Quantitative Grip Strength - Male Forelimbs	121
Bargraph of Quantitative Grip Strength - Female Forelimbs	122
Bargraph of Quantitative Grip Strength - Male Hindlimbs	123
Bargraph of Quantitative Grip Strength - Female Hindlimbs	124

Table of Contents for Appendix Cont.

	Appendix Page
Summary of Exposure Conditions - Males	125
Summary of Exposure Conditions - Females	126
Generation, Sampling and Analysis of Test Atmosphere	127
Diagram of Generating System	131
Diagram of Automated Analysis System	132
Chamber Distribution	133
Exploded View of Chamber	134
Grouped Summary of Clinical Signs - Male	135
Grouped Summary of Clinical Signs - Female	142
Incidence of Red Discolored Urine	150
Plot of Body Weights - Males	151
Mean Body Weight - Males	152
Individual Body Weights - Males	154
Plot of Body Weights - Females	156
Mean Body Weight - Females	157
Individual Body Weights - Females	159
Mean Organ and Terminal Body Weight - Males	161
Individual Organ and Terminal Body Weight - Males	162
Mean Organ and Terminal Body Weight - Females	163
Individual Organ and Terminal Body Weight - Females	164
Pathologist's Report	165
Summary Gross Pathology Table - Males	167
Individual Gross Pathology Table - Males	169
Summary Gross Pathology Table - Females	177
Individual Gross Pathology Table - Females	179
Summary Histopathology Table - Males	187
Individual Histopathology Table - Males	188
Summary Histopathology Table - Females	192
Individual Histopathology Table - Females	193
Histopathology Comment - Females	197
Initial Purity Analysis and Structure Confirmation Report	198
Final Purity Analysis and Structure Confirmation Report	199

Title: FUNCTIONAL OBSERVATIONAL SCREEN TO DETECT NEUROTOXIC EFFECTS

PURPOSE

In assessing the health effects of compounds, it may be necessary to test for neurotoxic effects. The functional observational battery is a noninvasive procedure designed to detect gross functional deficits in animals exposed to possible neurotoxins.

MATERIALS

The following materials should be assembled on a large cart or countertop: large paper tray and supply of absorbent paper, "clicker" type noise maker, rat tooth forceps, cotton-tipped swabs, jar of liver baby food, tongue depressors, stopwatch, counter for vocalizations, small wire cage, individual data sheets, scoring reference information, and grip strength apparatus.

PROCEDURE

1) All observations should be made before the daily treatment. In order to avoid variations in the test conditions, an effort should be made to keep the observational area free of distracting noises, smells, lights, etc. Two people, one functioning as an observer and the other as a recorder, are required to perform the screen. The observations are scored according to a list assigning letter/number grades for normal and possible abnormal variations. The scoring list is found at the end of this document.

2) The recorder should complete the heading on the Individual Data Sheets. The observer should not have knowledge of the dose levels for any animal tested. A copy of the Individual Data sheet is found at the end of this document. The scores may also be entered into a computer-generated data base. Comments may be recorded on the back of the Individual Data sheet.

3) The recorder should observe the animal in its home cage and record the scores regarding home-cage activity, feces amount, feces color, feces consistency, urine amount and urine color.

4) The recorder should remove the animal from its cage, recording the animal's behavior during removal. The following parameters should then be scored:

- Death
- Hair coat
- Mucous membranes/eye/skin color
- Body temperature (to touch)
- Respiratory rate
- Respiratory character
- Lacrimation
- Salivation amount
- Salivation onset
- Eye prominence
- Palpebral closure
- Convulsion onset
- Type of convulsion
- Length of seizure
- Length of post-ictal period
- Biting
- Tremor severity
- Tremor onset
- Handling behavior

5) The recorder or the study technician measures the body weight if the screen is performed on a day other than a scheduled weigh day.

6) Based upon the requirements of the protocol, the recorder then gives the animal to the observer who starts the stopwatch in order to time a 3 minute period for the observation of defecations, urinations and vocalizations. From this point on, the recorder should write the scores as the observer moves through the battery of observations.

7) The observer should place the animal on the paper tray and observe the following parameters as the animal walks around the tray:

- Locomotor activity
- Rearing activity
- Tail elevation
- Static limb position
- Abnormal gait
- Hypotonic gait - hindlimb
- Hypotonic gait - forelimb
- Ataxic gait
- Head position

8) The observer should approach the animal head-on with a blunt object held approximately 3 cm from its face for approximately 4 seconds and note the approach response.

9) The observer should touch the animal's rump with a blunt object and note the touch response.

10) While the animal is free to move about the paper tray, a "cricket" noise maker should be used to make a sudden noise outside of the animal's visual field. The auditory orientation response should be observed on the right and left sides.

11) A clean cotton swab should be dipped into processed liver or other olfactory attractant and brought into the animal's visual field from either side. The animal should be observed for olfactory orientation toward the swab. Taste may be observed by allowing the animal to lick the coated swab.

12) The animal should be turned on either side and its ability to return to a standing or sternal position observed.

13) As the rat walks on the paper tray, the observer should slide his hand along the animal's abdomen and hindlimbs, causing the hindlimbs to bend under. The placement of the limbs in response to this motion is then recorded for proprioceptive positioning.

14) The tail should be firmly grasped with a rat tooth forceps approximately 5 cm from the tip of the tail and the tail pinch response noted.

The following observations are done with the animal in hand.

15) The animal is picked up and the abdomen palpated. The abdominal tone is noted.

16) The bladder is palpated and the tone noted.

17) The skeletal muscle in each of the limbs is palpated and muscle tone noted.

18) Each limb is manipulated back and forth. The passive manipulation response is noted.

19) Pupillary size is noted for both eyes.

20) Any deviation of the eyes from a normal position is noted.

21) Nystagmus at rest should be noted. Positional nystagmus may be observed when the head is moved to either side.

22) Holding the animal so that the head is free to turn, a clean, white swab should be brought into the animal's visual field from behind. Up to ten tries may be made for each eye. Visual orientation to the swab is noted.

23) The medial canthus of the eyes are lightly touched with the uncovered end of a cotton swab. The eyelids are observed for blinking.

24) A blunt object is used to lightly touch the inside of the pinna. The pinna touch response is noted as the number of twitches observed.

25) The animal is held by the nape of the neck and the hind limbs quickly brought down on the paper tray. The extensor postural thrust reflex is noted.

26) The animal is held by the nape of the neck and one weight-bearing limb is allowed to touch the paper tray. The animal is then moved along the tray in a horizontal direction. The hopping reflex for each limb is noted.

27) The animal is held by its tail at a level lower than the paper tray. The animal is then slowly brought up to the level of the paper tray and the visual placing observed.

28) The animal is placed on an overturned cage and lifted off. The grip strength is noted. If the grip strength appears to be abnormal, quantitative measurement may be performed according to SOP TF 340.

29) Any bizarre behavior occurring at any time during the screen is noted.

30) The number of urinations, defecations and vocalizations which occurred during the 3 minute observation period are counted and recorded.

31) The animal is then returned to its home cage by the recorder.

32) Continuous data will be summarized using mean and standard deviation. Discontinuous data will be summarized using frequency of occurance or average effect.

FUNCTIONAL OBSERVATION SCREEN

SCORING REFERENCE SHEET PAGE 1 OF 4

RECORDER

CAGESIDE OBSERVATION

Home Cage Activity (D)

Posture in cage and while opening it:

Flattened, limbs may be extended	F
Lying on side	L
Curled up, resting or asleep	S
Sitting, head held low	H
Sitting normally	O
Alert, oriented toward investigator	A
Rearing	R
Vertical jumping	J
Circling purposelessly	C
Pacing purposelessly	P
Writhing, lying down, wave-like movements of abdomen, alternating limb movements	W
Animal in feeder	I

Feces Amount (D)

Normal	O
Increase	I
Decrease	D

Feces Color (D)

Normal	O
Pale	P
Dark	D

Feces Consistency (D)

Pellets	O
Partially formed	F
Unformed, diarrhea	U

Urine Amount (D)

Normal	O
Increased	I
Decreased	D

Urine Color (D)

Normal	O
Pale	P
Dark yellow	D
Possibly bloodstained	B
Colored by compound	C

Behavior While Removing From Cage (R)

Animal sits quietly and is easily removed	0
Vocalization without resisting being picked up	1
Animal rears often oriented toward investigator's hand	2
Runs around cage, hard to grab, may or may not vocalize	4
Freezes with or without vocalization	6
Aggressive, tail and throat rattle with or without vocalization, may attack	8

PHYSICAL EXAMINATION

Death (D)

Immediately Following Dosing	I
Delayed Following Dosing	D

PHYSICAL EXAMINATION CONT.

Hair Coat (D)

Clean and Groomed	O
Unkempt	D
Stained by feces	F
Stained by urine	U
Stained by chemical	C
Piloerection	P

Mucus Membranes/Eye/Skin Color (D)

Pink	O
Pale	P
Darkened, cyanotic	C
Darkened, brown	B
Bright, deep red flush	R

Body Temperature (D)

Normal to touch	O
Hypothermia	D
Hyperthemia	I

Respiratory Rate (D)

Normal by observation	O
Decreased < 80/min.	D
Increased > 110/min.	I

The normal respiratory rate of the rat may vary from 80 to 110/min. depending on activity level. Activity should be taken into account when scoring.

Respiratory Character (D)

Normal	O
Râles	R
Retching	T
Dyspneic	D
Gasping	G

Lacrimation (D)

None	O
Present	P
Chromodacryorrhea	C

Salivation Amount (R)

None	0
Very slight wet margin sub-maxillary area	2
Wet zone 1/4 sub-maxillary area	4
Wet zone 1/2 sub-maxillary area	6
Wet zone entire sub-maxillary area	8

Salivation Onset (D)

Immediately after dosing	D
Stimulated by handling	H
Premonitory to convulsion	C

Eye Prominence (D)

Normal	O
Exophthalmos	X
Enophthalmos	N

Palpebral Closure (R)

Eyelids wide open	0
Eyelids slightly drooping	4
Eyelids drooping halfway	6
Eyelids unopened	8

FUNCTIONAL OBSERVATION SCREEN

SCORING REFERENCE SHEET PAGE 2 OF 4

OBSERVER

PHYSICAL EXAMINATION CONT.

Convulsion Onset (D)

Spontaneous	S
Induced by handling, light, sound, or other stimuli (state stimulus)	I

Type of Convulsion (D)

Chewing only	CH
Jacksonian, begins with chewing	J
Jacksonian, state initial site	I
Mild clonic tremors of limbs	M
Clonic tremors of entire body	C
Tonic convulsion - limbs held rigidly extended	T
Tonic-clonic convulsion - periods of tonus alternating with clonus	TC
Opisthotonus - tonic spasm in which the head is bent backward and the spine is in a position of lordosis	P
Emprosthotonus - tonic spasm of the flexor muscles in which the body is bent forward	E
Spasmodic jumping - animal repeatedly jumps or bounces in air; popcorn seizure	S
Agonal or asphyxial convulsion - clonic-tonic convulsion resulting in impaired respiration frequently followed by death	A
Status epilepticus - repetitive convulsion often giving the appearance of a long continuous convulsion	SE

Length of Seizure (C)

Record to the nearest minute

Length of Post-ictal Period (C)

Length of time between the end of a convulsion and return to normal appearance. Record to nearest minute.

Biting (D)

Biting of cage	C
Self-destructive biting	S

Tremor Severity (R)

None	0
Body tremor in response to stimulation	1
Head tremors only	2
Body tremors slight, doesn't impair locomotion	4
Body tremors moderate, impairs locomotion slightly	6
Body tremors severe, prevents locomotion	8

Tremor Onset (D)

Resting tremor - occurs at rest	R
Intentional tremor - occurs or increases in severity only when the animal orients to an object or attempts to move	I

Handling Behavior (R) (observed throughout handling period)

Normally alert	0
Animal is limp	2
Vocalizes but does not resist handling	4
Freezes rigidly in hand	6
Attempts to escape, may vocalize or bite	8

Body Weight (C)

Record wt. to the nearest gram for rats and nearest one tenth of a gram for mice.

NEUROLOGICAL EXAMINATION

Locomotor Activity (R)

Resting	0
Reduced activity	1
Casual scratch, groom/slow spatial orientation	2
Vigorous scratching, grooming/mod. spatial orientation	4
Vigorous movement; sl. sharp, rapid/dart	6
Ext. vigor. movement; ext. sharp, rapid/dart	8

NEUROLOGICAL EXAMINATION CONT.

Rearing Activity (R)

Does not rear	0
Rears on hindlimbs with use of tail	2
Rears on hindlimbs without use of tail	4
Falls to side while rearing	6
Falls backward while rearing	8

Normal rearing activity would be indicated by a scoring of "2".

Tail Elevation (R)

Lifted while walking	0
Occasionally lifted while walking	1
Drags end of tail	2
Drags entire tail	4
Tail held vertically	6
Tail held diagonally (45°)	8

Normal activity is indicated by a score of "0".

Static Limb Position (D)

Limbs held normally	0
Crossing over medially	C
Deviated medially	M
Deviated laterally	L

Abnormal Gait (D)

Steppage	ST
Spastic	SP
Waddling	W
Dysmetric	D
Hypermetria	H
Duck-walk	DW
Scissor	S
Knuckling-over	K
Crossing-over	C

Hypotonic Gait - Hindlimb (R)

None	0
Incomplete extension at tarsus, no impairment of gait	2
Incomplete extension of tarsus, stifle and hip; impaired gait, pelvis tipped	4
Incomplete extension of tarsus, stifle, and hip, pelvis tipped, drags one limb intermittently	6
Drags both hindlimbs	8

Hypotonic Gait - Forelimb (R)

None	0
Incomplete extension of carpus	4
Thorax held close to ground	6
Thorax can not be lifted from table	8

Ataxic Gait (R)

None	0
Slight but definite	2
Considerable without falling	4
Considerable with frequent falls	6
Can't walk without falling	8

FUNCTIONAL OBSERVATION SCREEN — SCORING REFERENCE SHEET — PAGE 3 OF 4

NEUROLOGICAL EXAMINATION CONT.

Head Position (D)

The position of the head is observed and any tilt is recorded.

Responses:

Head held without tilt	0
Head tilted left	L
Head tilted right	R

Approach Response (R)

Approach rat head-on with blunt object held approximately 3 cm from face for 4 seconds

No reaction	0
Rat slowly approaches and sniffs at object	1
Rat freezes	2
Pulls away slightly	4
Jumps or turns away to avoid object	6
Jumps at object, attacks or bites	8

Touch Response (D)

Touch rump with blunt object

No reaction	0
Rat turns toward site slowly	T
Rat walks forward, away from stimulus	R
Rat freezes	F
Rat jerks around toward object	J
Turns to opposite side of touch	C
Aggressive or violent reaction with or without vocalization	A

Auditory Orientation (D)

With the rat free to move about, a "cricket" is used to make a snapping sound outside of the rat's visual field.

Rat orients to sound	0
Rat does not orient to sound	A

Olfactory Orientation (D)

A clean cotton swab is dipped in processed liver. While the rat is free, the swab is brought into its visual field from either side. The rat is observed for olfactory orientation toward the swab. Taste may be observed by allowing the rat to lick the covered swab.

Orients to swab	0
Does not orient to swab	A

Righting Reflex (D)

The rat is turned on either side and its ability to return to a standing or sternal position is observed.

Responses:

Rights when turned to either side	0
Attempts to right but cannot	A
Does not right when turned to either side	E
Does not right from left side	L
Does not right from right side	R

Proprioceptive Positioning (D)

The observer's hand is run under the animal's abdomen and hindlimbs while the animal is walking on the paper tray.

Responses:

Leaves limb in flexed position	F
Extends limb sluggishly	S
Extends limb briskly	O

NEUROLOGICAL EXAMINATION CONT.

Tail Pinch (D)

Grasp tail with rat tooth forceps ~ 5 cm from tip of tail

No response	0
Rat sluggish turns to look	T
Rat walks forward, away from stimulus	R
Rat freezes, with or without vocalization	F
Rat immediately turns, may bite at side	A
Rat jumps forward, without vocalization	J
Exaggerated response, vocalization, rapid turning	E

Abdominal Tone (D)

Completely flaccid; cavity doesn't return to normal	0
Slightly flaccid; rapid return to normal	1
Slight resistance	2
Moderate resistance	4
Extreme resistance; board-like	6
Pain, struggling, or vocalization on palpation	8

Normal tone would be indicated by a score of "2".

Bladder Tone (D)

Bladder not enlarged	0
Bladder enlarged and flaccid	EF
Bladder enlarged but not flaccid	E

Muscle Tone (D)

The musculature of the limbs is palpated between the thumb and first finger.

Responses:

Muscle is firm but not hard	0
Muscle is soft and flabby and may be atrophied	S
Muscle is tense and hard	T

Passive Manipulation (D)

The rat is held on its back in the observer's hand and each limb is manually extended and flexed.

Responses:

Limbs are easily manipulated and flaccid	F
Limbs are easily manipulated but resistance is encountered with movement	0
Limbs are manipulated with strong resistance (if clonus is observed, it should be noted)	R
Limbs are manipulated with strong resistance but relax in a cogwheel fashion	C

Pupillary Size (D)

Normal	0
Mydriasis	Y
Miosis	I

Eye Position (D)

Any deviation of the eyes from normal position is noted.

Responses:

Normal	0
Deviated dorsally	D
Deviated ventrally	V
Deviated medially	M
Deviated laterally	L

NEUROLOGICAL EXAMINATION CONT.

Nystagmus (D)

Any nystagmus at rest should be noted. Then the head should be moved to either side to induce any latent positional nystagmus.

Resting Nystagmus:

No nystagmus	0
Nystagmus to left	L
Nystagmus to right	R

Positional Nystagmus:

Eyes return to center quickly	0
Nystagmus on movement to left	L
Nystagmus on movement to right	R

Visual Orientation (D)

A clean white cotton swab is brought into the rat's visual field from behind. The rat is held in the hand with its head free to turn. Up to 10 tries may be made for each eye.

Rat orients toward object as soon as the object enters its visual field	0
Rat orients toward object but only after object is well into visual field	S
Rat does not orient toward object	P
Rat orients toward object and responds aggressively	A

Palpebral Reflex (D)

The medial canthus of the eye is touched with a slender blunt probe. Movement toward the eye must be slow and must not stimulate corneal or menace reflexes.

Responses:

Eyelids blink	0
Eyelids do not blink	A

Pinna Touch Response (R)

Use blunt object to touch inside of pinna

No response	0
One twitch	2
More than one twitch	4
Whole body withdraws	6

Extensor Postural Thrust Reflex (D)

The rat is held by the nape of its neck and lowered hindpaws first toward a tabletop.

Responses:

On contact the rat extends the hindlimbs to bear weight	0
On contact hindlimbs are extended but stumbling or collapse occurs	W
On contact hindlimbs are not extended	A

NEUROLOGICAL EXAMINATION CONT.

Hopping Reflex (D)

The rat is held by the nape of its neck and its abdomen supported with one forelimb touching a table surface. The rat is moved toward the side of the supporting limb. This movement is repeated for the second forelimb. Then the rat is held so that only the hindpaws touch the table surface and it is moved to one side and then the other.

Responses:

Rat hops without falling	0
Rat hops but occasionally falls	F
Rat does not hop	A
Rat hops with difficulty	D

Visual Placing (R)

Rat is suspended by its tail and lowered and brought forward towards the edge of an overturned cage.

Early vigorous extension	0
Before vibrisse contact	2
After slight vibrissae contact	3
After marked vibrissae contact	4
After nose contact	6
Bizarre behavior hampers placing	7
None even after nose contact	8

Grip Strength (semi-quantitative) (R)

Active grip, effective	0
Unusually strong	2
Moderate grip, effective	4
Slight grip, not effective	6
None	8

Bizarre Behavior (D)

Head flick	F
Head search	S
Hallucinatory	H
Compulsive biting	B
Self-destructive biting	D
Compulsive licking	L
Prancing	P
Upright walking	U
Aimless wandering	W
Circling	C
Waltzing	V
Retropulsion	R
Spatial disorientation	E
Side-to-side rocking	G

Urination (F)

Number of urinations during first three minutes of handling

Defecation (F)

Number of fecal pellets during first three minutes of handling. If stool is unformed, indicate that diarrhea was present

Spontaneous Vocalizations (F)

Record the number of vocalizations during three minutes of handling.

FUNCTIONAL OBSERVATIONAL BATTERY - INDIVIDUAL DATA

DATE: _____ RECORDER: _____ STUDY NO.: _____
STUDY DAY: _____ OBSERVER: _____ ACC. NO.: _____
SPECIES: _____ TABLE NO.: _____ DOSE LEVEL: _____
SEX: _____ PAGE _____ OF _____

ANIMAL NUMBERS												COMMENTS/SUMMARY
CAGESIDE OBSERVATION												
HOME CAGE ACTIVITY												
FECES AMOUNT												
FECES COLOR												
FECES CONSISTENCY												
URINE AMOUNT												
URINE COLOR												
BEHAVIOR FROM CAGE												
PHYSICAL EXAMINATION												
DEATH												
HAIR COAT												
MUCOUS MEMB./EYE/SKIN COLOR												
BODY TEMPERATURE												
RESPIRATORY RATE												
RESPIRATORY CHARACTER												
LACRIMATION												
SALIVATION AMOUNT												
SALIVATION ONSET												
EYE PROMINENCE												
PALPEBRAL CLOSURE												
CONVULSION ONSET												
TYPE OF CONVULSION												
LENGTH OF SEIZURE												
LENGTH OF POST-ICTAL PERIOD												
BITING												
TREMOR SEVERITY												
TREMOR ONSET												
HANDLING BEHAVIOR												
NEUROLOGICAL EXAMINATION												
LOCOMOTOR ACTIVITY (N=2)												
REARING ACTIVITY												
TAIL ELEVATION												
STATIC LIMB POSITION												
ABNORMAL GAIT												
HYPOTONIC GAIT - HINDLIMB												
HYPOTONIC GAIT - FORELIMB												
ATAXIC GAIT												
HEAD POSITION												
APPROACH RESPONSE (N=1)												
TOUCH RESPONSE												
AUDITORY ORIENTATION												
OLFACTORY ORIENTATION												
RIGHTING REFLEX												
PROPRIOCEPTIVE POSITIONING												
TAIL PINCH (N=A)												
ABDOMINAL TONE (N=2)												
BLADDER TONE												
MUSCLE TONE												
PASSIVE MANIPULATION												
PUPILLARY SIZE												
EYE POSITION												
NYSTAGMUS - RESTING												
NYSTAGMUS - POSITIONAL												
VISUAL ORIENTATION												
PALPEBRAL REFLEX												
PINNA TOUCH RESPONSE (N=2)												
EXTENSOR POSTURAL THRUST												
HOPPING REFLEX												
VISUAL PLACING												
GRIP STRENGTH - SEMI-QUANT.												
GRIP STRENGTH-QUANT.												
(FORELIMB) 1												
2												
3												
(HINDLIMB) 1												
2												
3												
BIZARRE BEHAVIOR												
DEFECATION												
URINATION												
SPONTANEOUS VOCALIZATIONS												

ADDITIONAL COMMENTS: _____

Title: QUANTITATIVE MEASUREMENT OF FORE- AND HINDLIMB GRIP STRENGTH IN THE RAT OR MOUSE

Materials: Strength testing apparatus equipped with a dial push-pull gauge (0.5 kg or 1.0 kg Chatillon Model DPP)

Procedure:

1) Select the push-pull gauge needed for the animal being tested (0.5 kg for mice and weanling rats, 1.0 kg for adult rats).It may be necessary to vary this selection due to treatment related effects. The observer will make this determination.

2) Place the apparatus on a firm, level surface.

3) Check the gauge for pointer zero position. Changes in pointer zero are corrected by setting a new zero index by rotating the bezel of the dial indicator, with the red slide button in the center neutral position. Having set the zero, it may be found that the pointer will move off zero when the slide button is actuated. Do not reset zero as the accuracy of the instrument has not been affected.

4) To measure forelimb grip strength:

   a) Set the slide button on the gauge to the up position.

   b) Holding the animal by the nape of the neck and tail, and with one motion, bring the animal down onto the screen so that the forelimbs grip the mesh and with a sliding motion, pull the tail until the animal's grip is broken. An observer should be situated alongside the apparatus during the procedure to check for any interfering occurrences such as jumping motions or toe hooking that may negate the validity of the reading.

   c) The gauge pointer will move counterclockwise and the reading should be taken from the grey dial. Move the slide button to the center position to reset the dial.

   d) Repeat this procedure for a total of three readings. Record each reading in the space provided on the Functional Observation Battery-Individual Data sheet or data base. The highest reading will be reported as the grip strength measurement.

5) To measure hindlimb grip strength:

a) Set the slide button on the gauge in the up position.

b) Attach the forelimb platform to the apparatus.

c) Holding the animal by the nape of the neck and tail, and with one motion, bring the animal toward the apparatus so that its forelimbs are resting on the platform and its hindlimbs are grasping the screen, and with a sliding motion, pull the tail until the animal's grip is broken. An observer should be situated alongside the apparatus to check for any interfering occurrences as noted in Step No. 4.

d) The gauge pointer will move clockwise and the reading should be taken from the green dial.

e) Repeat this procedure for a total of three readings. Record each reading in the space provided on the Functional Observation Battery-Individual Data sheet or data base. The highest reading will be reported as the grip strength measurement.

Maintenance and Calibration:

1) Calibration should be done once daily prior to testing and the results recorded in the calibration and maintenance logbook.

a) Remove screws which secure the gauge on the platform.

b) Hold gauge in vertical position (hook down).

c) With red slide button in the center neutral position, zero the index by rotating the bezel dial of the indicator. It may be found that the pointer will move off zero when the slide button is activated.

Forelimb - slide button towards hook.

Hindlimb - slide button away from hook.

d) Hang 100 g weight from hook.

Forelimb - gauge pointer will move clockwise and the reading should be 100 g on the green dial.

Hindlimb - gauge pointer will move counter-clockwise and the reading should be 100 g on the gray dial.

e) Rescrew gauge to platform.

f) Rezero index with gauge in horizontal position.

2) If recalibration is required (other than resetting zero), the instrument should be returned to the factory at the following address:

John Chatillon & Sons, Inc.
83-30 Kew Gardens Road
Kew Gardens, NY 11415-1999

Repairs may also be done by the Balance Shop in Kodak Park. Contact them at extension 76651 for information.

The following chart is used to convert readings to grams on the 2.5 kg strain gauge.

Gauge Position		Grams	Gauge Position		Grams
.1	=	3	1.1	=	28
.2	=	5	1.2	=	30
.3	=	8	1.3	=	33
.4	=	10	1.4	=	35
.5	=	13	1.5	=	38
.6	=	15	1.6	=	40
.7	=	18	1.7	=	43
.8	=	20	1.8	=	45
.9	=	23	1.9	=	48
1.0	=	25	2.0	=	50
2.1	=	53	3.1	=	78
2.2	=	55	3.2	=	80
2.3	=	58	3.3	=	83
2.4	=	60	3.4	=	85
2.5	=	63	3.5	=	88
2.6	=	65	3.6	=	90
2.7	=	68	3.7	=	93
2.8	=	70	3.8	=	95
2.9	=	73	3.9	=	98
3.0	=	75	4.0	=	100

Between the major divisions of the gauge, at every 100 grams, the gauge is divided into 4 minor divisions, each equal to 25 grams. For each 25 gram division, the gauge reading is interpolated to the nearest tenth and the value for the grip strength is read off the chart above.

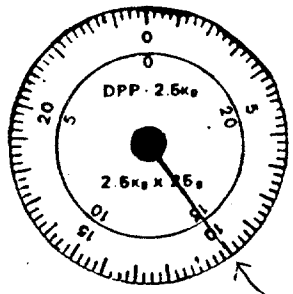

1000 grams

For the example to the left, the pointer is located between the major divisions of 1000 and 1100, and between the first and second minor divisions at the 0.2 gauge position. Refering to the chart above, the 0.2 gauge position is equivalent to 5 grams, Thus, the grip strength would be 1005 grams.

FUNCTIONAL OBSERVATIONAL BATTERY - SUMMARY DATA

Number of Animals Showing Each Response

TABLE NO.: 1

STUDY NO.: 880017I1
HAEL NO: 88-0017
ACC. NO.: 907124
DOSE LEVEL: 0 PPM
PAGE 1 OF 7

SPECIES: RAT
SEX: MALE
NO. RATS 10

EXAMINATION TIME	Pre Exp	4 Day	10 Day	32 Day	60 Day	95 Day			COMMENTS/SUMMARY
ACTIVITY STATUS									
HOME CAGE ACTIVITY									
Flattened, w/wo limbs extended									
Lying on side									
Curled up resting or asleep	1	3	3	1	3	2			
Sitting, head held low									
Sitting Normally	5	4	4	5	3	5			
Alert, oriented toward investigator	4	3	3	4	4	3			
Rearing									
Vertical jumping									
Circling purposelessly									
Pacing purposelessly									
Writhing, lying down, wave-like movement of abdomen, alternating limb movements									
Animal in feeder									
FECES AMOUNT									
Normal	10	10	10	10	10	10			
Increased									
Decreased									
FECES COLOR									
Normal	10	10	10	10	10	10			
Pale									
Dark									
FECES CONSISTENCY									
Pellets	10	9	10	10	10	10			
Partially formed		1							
Unformed, diarrhea									
URINE AMOUNT									
Normal	10	10	10	10	10	10			
Increased									
Decreased									
URINE COLOR									
Normal	10	10	10	10	10	10			
Pale									
Dark yellow									
Possibly blood stained									
Colored by compound									
BEHAVIOR FROM CAGE									
Animal sits quietly and is easily removed	8	9	10	10	10	10			
Vocalization without resisting being picked up	1	1							
Animal rears often oriented towards investigator's hand									
Runs around cage, hard to grab, may or may not vocalize	1								
Freezes w/wo vocalization									
Aggressive, tail and throat rattle w/wo vocalization, may attack									
PHYSICAL EXAMINATION									
DEATH									
None	10	10	10	10	10	10			
Immediately following dosing									
Delayed following dosing									
HAIR COAT									
Clean and groomed	10	10	9	9	8	8			Alopecia D:10 & 32 (1 rat) D:60 & 95 (2 rat)
Unkempt									
Stained by feces									Porphyrin Nasal Discharge D:60 (1 rat)
Stained by urine									
Stained by chemical									
Piloerection									
MUCUS MEMBRANES/EYE/SKIN COLOR									
Pink	10	10	10	10	10	10			
Pale									
Darkened, cyanotic									
Darkened, brown									
Bright, deep red flush									

FUNCTIONAL OBSERVATIONAL BATTERY - SUMMARY DATA

Number of Animals Showing Each Response

TABLE NO.: 1

SPECIES: RAT
SEX: MALE
NO. RATS 10

STUDY NO.: 880017I1
HAEL NO: 88-0017
ACC. NO.: 907124
DOSE LEVEL: 0 PPM

EXAMINATION TIME	Pre Exp	4 Day	10 Day	32 Day	60 Day	95 Day			COMMENTS/SUMMARY
PHYSICAL EXAMINATION									
BODY TEMPERATURE									
Normal to touch	10	10	10	10	10	10			
Hypothermia									
Hyperthermia									
RESPIRATORY RATE									
Normal by observation	10	10	10	10	10	10			
Decreased < 80/min									
Increased > 110/min									
RESPIRATORY CHARACTER									
Normal	10	10	10	10	10	10			
Rales									
Retching									
Dyspneic									
Gasping									
LACRIMATION									
None	10	10	10	10	10	10			
Present									
Chromodacryorrhea									
SALIVATION AMOUNT									
None	10	10	10	10	10	10			
Very slight wet margin sub-maxillary area									
Wet zone 1/4 sub-max area									
Wet zone 1/2 sub-max area									
Wet zone entire sub-max area									
SALIVATION ONSET									
Immediately after dosing									
Stimulated by handling									
Premonitory to convulsion									
EYE PROMINENCE									
Normal	10	10	10	10	10	10			
Exophthalmos									
Enophthalmos									
PALPEBRAL CLOSURE									
Eyelids wide open	10	10	10	10	10	10			
Eyelids slightly drooping									
Eyelids drooping halfway									
Eyelids unopened									
CONVULSION ONSET									
None	10	10	10	10	10	10			
Spontaneous									
Induced by handling, light, sound, or other stimuli (state stimulus)									
TYPE OF CONVULSION									
Chewing only									
Jacksonian, begins with chewing									
Jacksonian, state initial state									
Mild clonic tremors of limbs									
Clonic tremors of entire body									
Tonic convulsion									
Tonic-clonic convulsion									
Opisthotonus									
Emprosthotonus									
Spasmodic jumping									
Agonal or asphyxial convulsion									
Status epilepticus									
LENGTH OF SEIZURE									
LENGTH OF POST-ICTAL PERIOD									
BITING									
None	10	10	10	10	10	10			
Biting of cage									
Self-destructive biting									

FUNCTIONAL OBSERVATIONAL BATTERY - SUMMARY DATA

Number of Animals Showing Each Response

SPECIES: RAT
SEX: MALE
NO. RATS 10

TABLE NO.: 1

STUDY NO.: 88001711
HAEL NO: 88-0017
ACC. NO.: 907124
DOSE LEVEL: 0 PPM
PAGE 3 OF 7

EXAMINATION TIME	Pre Exp	4 Day	10 Day	32 Day	60 Day	95 Day			COMMENTS/SUMMARY
PHYSICAL EXAMINATION									
TREMOR SEVERITY									
None	10	10	10	10	10	10			
Body tremor in response to stimulation									
Head tremors only									
Body tremor slight, does not impair locomotion									
Body tremor moderate, impairs locomotion sightly									
Body tremor severe, prevents locomotion									
TREMOR ONSET									
Resting tremor - occurs at rest									
Intentional tremor - occurs or increases severity only when the animal orients to an object or attempts to move									
HANDLING BEHAVIOR									
Normally alert	7	9	10	9	10	10			
Animal is limp									
Vocalizes but does not resist		1		1					
Freezes rigidly in hand									
Attempts to escape, may vocalize or bite	3								
NEUROLOGICAL EXAMINATION									
LOCOMOTOR ACTIVITY									
Resting									
Reduced activity		1	2	5	2	3			
Casual scratch, groom/slow spatial orientation	5	9	7	5	8	7			
Vigorous scratching, grooming/ mod. spatial orientation	4		1						
Vigorous movement; slt. sharp rapid/dart	1								
Extensive vigorous movement; ext. sharp, rapid/dart									
REARING ACTIVITY									
Does not rear	10	10	9	10	9	8			
Rears on hindlimbs with use of tail			1		1	2			
Rears on hindlimbs without use of tail									
Falls to side while rearing									
Falls backward while rearing									
TAIL ELEVATION									
Lifted while walking	6	9	7	8	9	9			
Occ. lifted while walking	3		1						
Drags end of tail	1	1	2	2	1	1			
Drags entire tail									
Tail held vertically									
Tail held diagonally (45°)									
STATIC LIMB POSITION									
Limbs held normally	10	10	10	10	10	10			
Crossing over medially									
Deviated medially									
Deviated laterally									
ABNORMAL GAIT									
None	10	10	10	10	10	10			
Steppage									
Spastic									
Waddling									
Dysmetric									
Hypermetria									
Duck-walk									
Scissor									
Knuckling-over									
Crossing-over									

FUNCTIONAL OBSERVATIONAL BATTERY - SUMMARY DATA

Number of Animals Showing Each Response

TABLE NO.: 1

SPECIES: RAT
SEX: MALE
NO. RATS 10

STUDY NO.: 880017I1
HAEL NO: 88-0017
ACC. NO.: 907124
DOSE LEVEL: 0 PPM
PAGE 4 OF 7

EXAMINATION TIME	Pre Exp	4 Day	10 DaY	32 Day	60 Day	95 Day			COMMENTS/SUMMARY
NEUROLOGICAL EXAMINATION									
HYPOTONIC GAIT - HINDLIMB									
None	10	10	10	10	10	10			
Incomplete extension of tarsus, no impairment of gait									
Incomplete extension of tarsus, stifle, and hip; impaired gait, pelvis tipped									
HYPOTONIC GAIT - FORELIMB									
None	10	10	10	10	10	10			
Incomplete extension of carpus									
Thorax held close to ground									
Thorax can not be lifted off ground									
ATAXIC GAIT									
None	10	10	10	10	10	10			
Slight but definite									
Considerable without falling									
Considerable w/ frequent falls									
Can't walk w/o falling									
HEAD POSITION									
Head held without tilt	10	10	10	10	10	10			
Head held left									
Head held right									
APPROACH RESPONSE									
No reaction		3	6	6	4	5			
Rat slowly approaches and sniffs at object	6	7	4	4	6	4			
Rat freezes									
Rat pulls away slightly	3					1			
Jumps or turns away to avoid object	1								
Jumps at object, attacks or bites									
TOUCH RESPONSE									
No reaction	1	1	5	3	2	6			
Rat turns toward site slowly	3	6	2	3	3				
Rat walks forward, away from stimulus	5	3	3	4	5	4			
Rat freezes									
Rat jerks around toward object									
Turns to opposite side of touch	1								
Aggressive or violent reaction w/ or w/o vocalization									
AUDITORY ORIENTATION									
Orients to sound	4	5	4	3	4	6			
Does not orient to sound	6	5	6	7	6	4			
OLFACTORY ORIENTATION									
Orients to swab	9	6	2	4	4	4			
Does not orient to swab	1	4	8	6	6	6			
RIGHTING RESPONSE									
Rights when turned to either side	10	10	10	10	10	10			
Attempts to right but cannot									
Does not right when turned to either side									
Does not right from left side									
Does not right from right side									
PROPRIOCEPTIVE POSITIONING									
Leaves limb in flexed position									
Extends limb sluggishly									
Extends limb briskly	10	10	10	10	10	10			

FUNCTIONAL OBSERVATIONAL BATTERY - SUMMARY DATA

Number of Animals Showing Each Response

TABLE NO.: 1

STUDY NO.: 88001711
HAEL NO: 88-0017
ACC. NO.: 907124
DOSE LEVEL: 0 PPM
PAGE 5 OF 7

SPECIES: RAT
SEX: MALE
NO. RATS 10

EXAMINATION TIME	Pre Exp	4 Day	10 Day	32 Day	60 Day	95 Day			COMMENTS/SUMMARY
NEUROLOGICAL EXAMINATION									
TAIL PINCH									
No response				2	1	4			Animal pulls tail away
Rat sluggish turns to look	1	4	2	2	1				D:10 (1 rat), D:95 (2 rats)
Rat walks forward away from stimulus	8	5	5	4	8	2			
Rat freezes, w/wo vocalization									
Rat immediately turns, may bite at side	1	1	2	2		1			
Rat jumps forward, w/o vocal.									
Exaggerated response, vocal., rapid turning						1			
ABDOMINAL TONE									
Completely flaccid; cavity does not return to normal									
Slightly flaccid; rapid return to normal		1				1			
Slight resistance	9	9	8	10	8	9			
Moderate resistance	1		2		2				
Extreme resistance; board-like									
Pain, struggling, or vocalization on palpation									
BLADDER TONE									
Bladder not enlarged	10	10	10	10	10	10			
Bladder enlarged and flaccid									
Bladder enlarged but not flaccid									
MUSCLE TONE									
Muscle is firm but not hard	10	10	9	10	9	10			
Muscle is soft and flabby and may be atrophied									
Muscle is tense and hard			1		1				
PASSIVE MANIPULATION									
Limbs are easily manipulated and flaccid									
Limbs are easily manipulated but resistance is encountered on moving	9	10	8	9	9	10			
Limbs are manipulated with strong resistance	1		2	1	1				
Limbs are manipulated with strong resistance, but relax in a cogwheel fashion									
PUPILLARY SIZE									
Normal	10	10	10	10	10	10			
Mydriasis									
Miosis									
EYE POSITION									
Normal	10	10	10	10	10	10			
Deviated dorsally									
Deviated ventrally									
Deviated medially									
Deviated laterally									
NYSTAGMUS - RESTING									
None	10	10	10	10	10	10			
Nystagmus to the left									
Nystagmus to the right									
NYSTAGMUS - POSITIONAL									
Eyes return to center quickly	10	10	10	10	10	10			
Nystagmus on movement to left									
Nystagmus on movement to right									

FUNCTIONAL OBSERVATIONAL BATTERY - SUMMARY DATA

Number of Animals Showing Each Response

TABLE NO.: 1

STUDY NO.: 88001711
HAEL NO: 88-0017
ACC. NO.: 907124
DOSE LEVEL: 0 PPM
PAGE 6 OF 7

SPECIES: RAT
SEX: MALE
NO. RATS 10

EXAMINATION TIME	Pre Exp	4 Day	10 Day	32 Day	60 Day	95 Day			COMMENTS/SUMMARY
NEUROLOGICAL EXAMINATION									
VISUAL ORIENTATION									
Rat orients toward object as soon as object enters visual field	1		2			2			
Rat orients to object but only after object is well into visual field	5	8	7	6	1	1			
Does not orient toward object	4	2	1	4	9	7			
Orients toward object and responds aggressively									
PALPERBRAL REFLEX									
Eyelids blink	10	10	10	10	10	10			
Eyelids do not blink									
PINNA TOUCH RESPONSE									
No response	3		3	3	6	7			
One twitch	3	5	5	3	3	3			
More than one twitch	4	5	2	4	1				
Whole body withdraws									
EXTENSOR POSTURAL THRUST									
On contact, rat extends hind-limbs to bear weight	10	10	10	10	10	10			
On contact hindlimbs are extended but stumbling or collapse occurs									
On contact limbs are not extended									
HOPPING REFLEX									
Rat hops without falling	10	10	10	10	10	10			
Rat hops but occasionally falls									
Rat does not hop									
Rat hops with difficulty									
VISUAL PLACING									
Early vigorous extension	10	10	10	10	10	10			
Before vibrissae contact									
After slight vibrissae contact									
After marked vibrissae contact									
After nose contact									
Bizarre behav. hampers placing									
None even after nose contact									
GRIP STRENGTH - SEMI-QUANT.									
Active grip, effective	10	10	10	10	10	10			
Unusually strong									
Moderate grip, effective									
Slight grip, not effective									
None									
GRIP STRENGTH - QUANT. (g)									
(FORELIMB) X	523	596	672	678	659	1424			Grip strength of 1230 was
SD	121	99	61	27	36	357			maximum limit on guage.
									D:60 Hindlimb (1 rat)
(HINDLIMB) X	399	407	650	776	893	1113			
SD	101	144	181	174	181	294			
BIZARRE BEHAVIOR									
None	10	10	10	10	10	10			
Head flick									
Head search									
Hallucinatory									
Compulsive biting									
Self-destructive biting									
Compulsive licking									
Prancing									
Upright walking									
Aimless wandering									
Circling									
Waltzing									
Retropulsion									
Spatial disorientation									
Side-to-side rocking									

FUNCTIONAL OBSERVATIONAL BATTERY - SUMMARY DATA

Number of Animals Showing Each Response

TABLE NO.: 1

STUDY NO.: 880017I1
HAEL NO: 88-0017
ACC. NO.: 907124
DOSE LEVEL: 0 PPM
PAGE 7 OF 7

SPECIES: RAT
SEX: MALE
NO. RATS 10

EXAMINATION TIME		Pre Exp	4 Day	10 Day	32 Day	60 Day	95 Day			COMMENTS/SUMMARY
NEUROLOGICAL EXAMINATION										
DEFECATION	X	4.0	2.3	1.8	1.1	0.8	1.2			
	SD	1.5	2.1	1.5	1.7	1.6	1.6			
URINATION	X	1.3	0.9	0.2	0.7	0.4	0.1			
	SD	0.7	0.6	0.4	0.7	0.7	0.3			
SPONTANEOUS VOCALIZATIONS	X	11.6	6.8	4.6	5.0	4.5	4.2			
	SD	10.7	4.8	3.2	3.5	2.0	2.7			

ADDITIONAL COMMENTS:

3543T

FUNCTIONAL OBSERVATIONAL BATTERY - SUMMARY DATA

Number of Animals Showing Each Response

TABLE NO.: 2

STUDY NO.: 880017I1
HAEL NO: 88-0017
ACC. NO.: 907124
DOSE LEVEL: 100 PPM
PAGE 1 OF 7

SPECIES: RAT
SEX: MALE
NO. RATS 10

EXAMINATION TIME	Pre Exp	4 Day	10 Day	32 Day	60 Day	95 Day			COMMENTS/SUMMARY
ACTIVITY STATUS									
HOME CAGE ACTIVITY									
Flattened, w/wo limbs extended									
Lying on side									
Curled up resting or asleep	4	2	3	3	1	1			
Sitting, head held low									
Sitting Normally	3	3	4	3	5	7			
Alert, oriented toward investigator	3	5	3	4	4	2			
Rearing									
Vertical jumping									
Circling purposelessly									
Pacing purposelessly									
Writhing, lying down, wave-like movement of abdomen, alternating limb movements									
Animal in feeder									
FECES AMOUNT									
Normal	10	10	10	10	10	10			
Increased									
Decreased									
FECES COLOR									
Normal	10	10	10	10	10	10			
Pale									
Dark									
FECES CONSISTENCY									
Pellets	10	10	10	10	10	10			
Partially formed									
Unformed, diarrhea									
URINE AMOUNT									
Normal									
Increased									
Decreased									
URINE COLOR									
Normal	10	10	10	10	10	10			
Pale									
Dark yellow									
Possibly blood stained									
Colored by compound									
BEHAVIOR FROM CAGE									
Animal sits quietly and is easily removed	8	9	10	10	9	9			
Vocalization without resisting being picked up		1			1	1			
Animal rears often oriented towards investigator's hand									
Runs around cage, hard to grab, may or may not vocalize	2								
Freezes w/wo vocalization									
Aggressive, tail and throat rattle w/wo vocalization, may attack									
PHYSICAL EXAMINATION									
DEATH									
None	10	10	10	10	10	10			
Immediately following dosing									
Delayed following dosing									
HAIR COAT									
Clean and groomed	10	10	10	10	10	10			
Unkempt									
Stained by feces									
Stained by urine									
Stained by chemical									
Piloerection									
MUCUS MEMBRANES/EYE/SKIN COLOR									
Pink	10	10	10	10	10	10			
Pale									
Darkened, cyanotic									
Darkened, brown									
Bright, deep red flush									

FUNCTIONAL OBSERVATIONAL BATTERY - SUMMARY DATA

Number of Animals Showing Each Response

TABLE NO.: 2

STUDY NO.: 88001711
HAEL NO: 88-0017
ACC. NO.: 907124
DOSE LEVEL: 100 PPM
PAGE 2 OF 7

SPECIES: RAT
SEX: MALE
NO. RATS 10

EXAMINATION TIME	Pre Exp	4 Day	10 Day	32 Day	60 Day	95 Day			COMMENTS/SUMMARY
PHYSICAL EXAMINATION									
BODY TEMPERATURE									
Normal to touch	10	10	10	10	10	10			
Hypothermia									
Hyperthermia									
RESPIRATORY RATE									
Normal by observation	10	10	10	10	10	10			
Decreased < 80/min									
Increased > 110/min									
RESPIRATORY CHARACTER									
Normal	10	10	10	10	10	10			
Rales									
Retching									
Dyspneic									
Gasping									
LACRIMATION									
None	10	10	10	10	10	10			
Present									
Chromodacryorrhea									
SALIVATION AMOUNT									
None	10	10	10	10	10	10			
Very slight wet margin sub-maxillary area									
Wet zone 1/4 sub-max area									
Wet zone 1/2 sub-max area									
Wet zone entire sub-max area									
SALIVATION ONSET									
Immediately after dosing									
Stimulated by handling									
Premonitory to convulsion									
EYE PROMINENCE									
Normal	10	10	10	10	10	10			
Exophthalmos									
Enophthalmos									
PALPEBRAL CLOSURE									
Eyelids wide open	10	10	10	10	10	10			
Eyelids slightly drooping									
Eyelids drooping halfway									
Eyelids unopened									
CONVULSION ONSET									
None	10	10	10	10	10	10			
Spontaneous									
Induced by handling, light, sound, or other stimuli (state stimulus)									
TYPE OF CONVULSION									
Chewing only									
Jacksonian, begins with chewing									
Jacksonian, state initial state									
Mild clonic tremors of limbs									
Clonic tremors of entire body									
Tonic convulsion									
Tonic-clonic convulsion									
Opisthotonus									
Emprosthotonus									
Spasmodic jumping									
Agonal or asphyxial convulsion									
Status epilepticus									
LENGTH OF SEIZURE									
LENGTH OF POST-ICTAL PERIOD									
BITING									
None	10	10	10	10	10	10			
Biting of cage									
Self-destructive biting									

FUNCTIONAL OBSERVATIONAL BATTERY - SUMMARY DATA

Number of Animals Showing Each Response

TABLE NO.: 2

SPECIES: RAT
SEX: MALE
NO. RATS 10

STUDY NO.: 88001711
HAEL NO: 88-0017
ACC. NO.: 907124
DOSE LEVEL: 100 PPM
PAGE 3 OF 7

EXAMINATION TIME	Pre Exp	4 Day	10 Day	32 Day	60 Day	95 Day			COMMENTS/SUMMARY
PHYSICAL EXAMINATION									
TREMOR SEVERITY									
None	10	10	10	10	10	10			
Body tremor in response to stimulation									
Head tremors only									
Body tremor slight, does not impair locomotion									
Body tremor moderate, impairs locomotion sightly									
Body tremor severe, prevents locomotion									
TREMOR ONSET									
Resting tremor - occurs at rest									
Intentional tremor - occurs or increases severity only when the animal orients to an object or attempts to move									
HANDLING BEHAVIOR									
Normally alert	8	8	7	7	8	7			
Animal is limp									
Vocalizes but does not resist	1	2	3	3	1	1			
Freezes rigidly in hand									
Attempts to escape, may vocalize or bite	1				1	2			
NEUROLOGICAL EXAMINATION									
LOCOMOTOR ACTIVITY									
Resting					1				
Reduced activity			3	2	3	4			
Casual scratch, groom/slow spatial orientation	7	10	7	8	6	6			
Vigorous scratching, grooming/ mod. spatial orientation	2								
Vigorous movement; slt. sharp rapid/dart	1								
Extensive vigorous movement; ext. sharp, rapid/dart									
REARING ACTIVITY									
Does not rear	10	9	8	10	10	9			
Rears on hindlimbs with use of tail		1	2						
Rears on hindlimbs without use of tail						1			
Falls to side while rearing									
Falls backward while rearing									
TAIL ELEVATION									
Lifted while walking	9	7	6	9	7	5			
Occ. lifted while walking	1	3	3		1				
Drags end of tail			1	1	2	5			
Drags entire tail									
Tail held vertically									
Tail held diagonally (45°)									
STATIC LIMB POSITION									
Limbs held normally	10	10	10	10	10	10			
Crossing over medially									
Deviated medially									
Deviated laterally									
ABNORMAL GAIT									
None	10	10	10	10	10	10			
Steppage									
Spastic									
Waddling									
Dysmetric									
Hypermetria									
Duck-walk									
Scissor									
Knuckling-over									
Crossing-over									

FUNCTIONAL OBSERVATIONAL BATTERY - SUMMARY DATA

Number of Animals Showing Each Response

SPECIES: RAT
SEX: MALE
NO. RATS 10

TABLE NO.: 2

STUDY NO.: 880017I1
HAEL NO: 88-0017
ACC. NO.: 907124
DOSE LEVEL: 100 PPM
PAGE 4 OF 7

EXAMINATION TIME	Pre Exp	4 Day	10 Day	32 Day	60 Day	95 Day			COMMENTS/SUMMARY
NEUROLOGICAL EXAMINATION									
HYPOTONIC GAIT - HINDLIMB									
None	10	10	10	10	10	10			
Incomplete extension of tarsus, no impairment of gait									
Incomplete extension of tarsus, stifle, and hip; impaired gait, pelvis tipped									
HYPOTONIC GAIT - FORELIMB									
None	10	10	10	10	10	10			
Incomplete extension of carpus									
Thorax held close to ground									
Thorax can not be lifted off ground									
ATAXIC GAIT									
None	10	10	10	10	10	10			
Slight but definite									
Considerable without falling									
Considerable w/ frequent falls									
Can't walk w/o falling									
HEAD POSITION									
Head held without tilt	10	10	10	10	10	10			
Head held left									
Head held right									
APPROACH RESPONSE									
No reaction	5	3	3	8	6	6			
Rat slowly approaches and sniffs at object	3	5	6	2	4	4			
Rat freezes									
Rat pulls away slightly									
Jumps or turns away to avoid object	2	2	1						
Jumps at object, attacks or bites									
TOUCH RESPONSE									
No reaction	2	4	3	5	5	6			
Rat turns toward site slowly	2	2	1	1	3	2			
Rat walks forward, away from stimulus	5	3	5	3	2	1			
Rat freezes		1							
Rat jerks around toward object									
Turns to opposite side of touch	1		1			1			
Aggressive or violent reaction w/ or w/o vocalization				1					
AUDITORY ORIENTATION									
Orients to sound	3	3	2	4	1	1			
Does not orient to sound	7	7	8	6	9	9			
OLFACTORY ORIENTATION									
Orients to swab	10	7	2	3	1	1			
Does not orient to swab		3	8	7	9	9			
RIGHTING RESPONSE									
Rights when turned to either side	10	10	10	10	10	10			
Attempts to right but cannot									
Does not right when turned to either side									
Does not right from left side									
Does not right from right side									
PROPRIOCEPTIVE POSITIONING									
Leaves limb in flexed position									
Extends limb sluggishly									
Extends limb briskly	10	10	10	10	10	10			

FUNCTIONAL OBSERVATIONAL BATTERY - SUMMARY DATA

Number of Animals Showing Each Response

TABLE NO.: 2

STUDY NO.: 880017I1
HAEL NO: 88-0017
ACC. NO.: 907124
DOSE LEVEL: 100 PPM
PAGE 5 OF 7

SPECIES: RAT
SEX: MALE
NO. RATS 10

EXAMINATION TIME	Pre Exp	4 Day	10 Day	32 Day	60 Day	95 Day			COMMENTS/SUMMARY
NEUROLOGICAL EXAMINATION									
TAIL PINCH									
No response		1	3	1	2	2			Animal pulls tail away
Rat sluggish turns to look	1	3	3	1	1				D:10 & 95 (2 rats)
Rat walks forward away from stimulus	6	6	2	6	5	5			
Rat freezes, w/wo vocalization									
Rat immediately turns, may bite at side	3			2	1				
Rat jumps forward, w/o vocal.									
Exaggerated response, vocal., rapid turning					1	1			
ABDOMINAL TONE									
Completely flaccid; cavity does not return to normal									
Slightly flaccid; rapid return to normal		1				1			
Slight resistance	9	9	10	10	9	7			
Moderate resistance	1				1	2			
Extreme resistance; board-like									
Pain, struggling, or vocalization on palpation									
BLADDER TONE									
Bladder not enlarged	10	10	10	10	10	10			
Bladder enlarged and flaccid									
Bladder enlarged but not flaccid									
MUSCLE TONE									
Muscle is firm but not hard	10	10	10	10	10	9			
Muscle is soft and flabby and may be atrophied									
Muscle is tense and hard						1			
PASSIVE MANIPULATION									
Limbs are easily manipulated and flaccid									
Limbs are easily manipulated but resistance is encountered on moving	10	10	10	10	9	8			
Limbs are manipulated with strong resistance					1	2			
Limbs are manipulated with strong resistance, but relax in a cogwheel fashion									
PUPILLARY SIZE									
Normal	10	10	10	10	10	10			
Mydriasis									
Miosis									
EYE POSITION									
Normal	10	10	10	10	10	10			
Deviated dorsally									
Deviated ventrally									
Deviated medially									
Deviated laterally									
NYSTAGMUS - RESTING									
None	10	10	10	10	10	10			
Nystagmus to the left									
Nystagmus to the right									
NYSTAGMUS - POSITIONAL									
Eyes return to center quickly	10	10	10	10	10	10			
Nystagmus on movement to left									
Nystagmus on movement to right									

FUNCTIONAL OBSERVATIONAL BATTERY - SUMMARY DATA

Number of Animals Showing Each Response

TABLE NO.: 2

STUDY NO.: 88001711
HAEL NO: 88-0017
ACC. NO.: 907124
DOSE LEVEL: 100 PPM
PAGE 6 OF 7

SPECIES: RAT
SEX: MALE
NO. RATS 10

EXAMINATION TIME	Pre Exp	4 Hr.	10 Hr.	32 Day	60 Day	95 Day			COMMENTS/SUMMARY
NEUROLOGICAL EXAMINATION									
VISUAL ORIENTATION									
Rat orients toward object as soon as object enters visual field	2	1	1	2					
Rat orients to object but only after object is well into visual field	4	6	3	3					
Does not orient toward object	4	3	6	5	10	10			
Orients toward object and responds aggressively									
PALPERBRAL REFLEX									
Eyelids blink	10	10	10	10	10	10			
Eyelids do not blink									
PINNA TOUCH RESPONSE									
No response	5	2	4	8	8	7			
One twitch	5	5	4	1		3			
More than one twitch		3	1	1	2				
Whole body withdraws			1						
EXTENSOR POSTURAL THRUST									
On contact, rat extends hind-limbs to bear weight	10	10	10	10	10	10			
On contact hindlimbs are extended but stumbling or collapse occurs									
On contact limbs are not extended									
HOPPING REFLEX									
Rat hops without falling	10	10	10	10	10	10			
Rat hops but occasionally falls									
Rat does not hop									
Rat hops with difficulty									
VISUAL PLACING									
Early vigorous extension	10	10	10	10	10	10			
Before vibrissae contact									
After slight vibrissae contact									
After marked vibrissae contact									
After nose contact									
Bizarre behav. hampers placing									
None even after nose contact									
GRIP STRENGTH - SEMI-QUANT.									
Active grip, effective	9	10	10	10	10	9			
Unusually strong						1			
Moderate grip, effective	1								
Slight grip, not effective									
None									
GRIP STRENGTH - QUANT. (g)									
(FORELIMB) X	476	651	621	686	652	1408			Grip strength of 1230 was maximum limit on guage.
SD	137	99	99	17	37	259			D:60 Hindlimb (1 rat)
(HINDLIMB) X	355	466	453	864	933	1093			
SD	167	145	122	144	231	322			
BIZARRE BEHAVIOR									
None	10	10	9	10	10	10			
Head flick			1						
Head search									
Hallucinatory									
Compulsive biting									
Self-destructive biting									
Compulsive licking									
Prancing									
Upright walking									
Aimless wandering									
Circling									
Waltzing									
Retropulsion									
Spatial disorientation									
Side-to-side rocking									

FUNCTIONAL OBSERVATIONAL BATTERY - SUMMARY DATA

Number of Animals Showing Each Response

TABLE NO.: 2

STUDY NO.: 880017I1
HAEL NO: 88-0017
ACC. NO.: 907124
DOSE LEVEL: 100 PPM
PAGE 7 OF 7

SPECIES: RAT
SEX: MALE
NO. RATS 10

EXAMINATION TIME		Pre Exp	4 Day	10 Day	32 Day	60 Day	95 Day			COMMENTS/SUMMARY
NEUROLOGICAL EXAMINATION										
DEFECATION	X	3.0	3.3	2.8	1.3	2.5	2.2			
	SD	1.1	3.2	2.1	1.3	2.1	1.5			
URINATION	X	1.3	0.8	0.7	0.6	0.4	0.4			
	SD	0.7	0.6	0.8	0.7	0.5	1.0			
SPONTANEOUS VOCALIZATIONS	X	6.9	7.4	7.6	6.7	9.0	10.0			
	SD	6.4	5.8	5.8	6.5	11.2	12.2			

ADDITIONAL COMMENTS:

3544T

FUNCTIONAL OBSERVATIONAL BATTERY - SUMMARY DATA

Number of Animals Showing Each Response

SPECIES: RAT
SEX: MALE
NO. RATS 10

TABLE NO.: 3

STUDY NO.: 880017I1
HAEL NO: 88-0017
ACC. NO.: 907124
DOSE LEVEL: 200 PPM
PAGE 1 OF 7

EXAMINATION TIME	Pre Exp	4 Day	10 Day	32 Day	60 Day	95 Day			COMMENTS/SUMMARY
ACTIVITY STATUS									
HOME CAGE ACTIVITY									
Flattened, w/wo limbs extended									
Lying on side									
Curled up resting or asleep	4	1	1	1	1	1			
Sitting, head held low									
Sitting Normally	4	6	6	3	4	5			
Alert, oriented toward investigator	2	3	3	6	5	4			
Rearing									
Vertical jumping									
Circling purposelessly									
Pacing purposelessly									
Writhing, lying down, wave-like movement of abdomen, alternating limb movements									
Animal in feeder									
FECES AMOUNT									
Normal	10	10	10	10	10	10			
Increased									
Decreased									
FECES COLOR									
Normal	10	10	10	10	10	10			
Pale									
Dark									
FECES CONSISTENCY									
Pellets	10	10	10	10	10	10			
Partially formed									
Unformed, diarrhea									
URINE AMOUNT									
Normal									
Increased									
Decreased									
URINE COLOR									
Normal	10	10	10	10	10	10			
Pale									
Dark yellow									
Possibly blood stained									
Colored by compound									
BEHAVIOR FROM CAGE									
Animal sits quietly and is easily removed	10	10	9	10	10	10			
Vocalization without resisting being picked up									
Animal rears often oriented towards investigator's hand									
Runs around cage, hard to grab, may or may not vocalize			1						
Freezes w/wo vocalization									
Aggressive, tail and throat rattle w/wo vocalization, may attack									
PHYSICAL EXAMINATION									
DEATH									
None	10	10	10	10	10	10			
Immediately following dosing									
Delayed following dosing									
HAIR COAT									
Clean and groomed	10	10	10	10	9	9			Alopecia D:60 & 95 (1 rat)
Unkempt									
Stained by feces									
Stained by urine									
Stained by chemical									
Piloerection									
MUCUS MEMBRANES/EYE/SKIN COLOR									
Pink	10	10	10	10	10	10			
Pale									
Darkened, cyanotic									
Darkened, brown									
Bright, deep red flush									

FUNCTIONAL OBSERVATIONAL BATTERY - SUMMARY DATA

Number of Animals Showing Each Response

TABLE NO.: 3

STUDY NO.: 880017I1
HAEL NO: 88-0017
ACC. NO.: 907124
DOSE LEVEL: 200 PPM
PAGE 2 OF 7

SPECIES: RAT
SEX: MALE
NO. RATS 10

EXAMINATION TIME	Pre Exp	4 Day	10 Day	32 Day	60 Day	95 Day			COMMENTS/SUMMARY
PHYSICAL EXAMINATION									
BODY TEMPERATURE									
Normal to touch	10	10	10	10	10	10			
Hypothermia									
Hyperthermia									
RESPIRATORY RATE									
Normal by observation	10	10	10	10	10	10			
Decreased < 80/min									
Increased > 110/min									
RESPIRATORY CHARACTER									
Normal	10	10	10	10	10	10			
Rales									
Retching									
Dyspneic									
Gasping									
LACRIMATION									
None	10	10	10	10	10	10			
Present									
Chromodacryorrhea									
SALIVATION AMOUNT									
None	10	10	10	10	10	10			
Very slight wet margin sub-maxillary area									
Wet zone 1/4 sub-max area									
Wet zone 1/2 sub-max area									
Wet zone entire sub-max area									
SALIVATION ONSET									
Immediately after dosing									
Stimulated by handling									
Premonitory to convulsion									
EYE PROMINENCE									
Normal	10	10	10	10	10	10			
Exophthalmos									
Enophthalmos									
PALPEBRAL CLOSURE									
Eyelids wide open	10	10	10	10	10	10			
Eyelids slightly drooping									
Eyelids drooping halfway									
Eyelids unopened									
CONVULSION ONSET									
None	10	10	10	10	10	10			
Spontaneous									
Induced by handling, light, sound, or other stimuli (state stimulus)									
TYPE OF CONVULSION									
Chewing only									
Jacksonian, begins with chewing									
Jacksonian, state initial state									
Mild clonic tremors of limbs									
Clonic tremors of entire body									
Tonic convulsion									
Tonic-clonic convulsion									
Opisthotonus									
Emprosthotonus									
Spasmodic jumping									
Agonal or asphyxial convulsion									
Status epilepticus									
LENGTH OF SEIZURE									
LENGTH OF POST-ICTAL PERIOD									
BITING									
None	10	10	10	10	10	10			
Biting of cage									
Self-destructive biting									

FUNCTIONAL OBSERVATIONAL BATTERY - SUMMARY DATA

Number of Animals Showing Each Response

TABLE NO.: 3

STUDY NO.: 880017I1
HAEL NO: 88-0017
ACC. NO.: 907124
DOSE LEVEL: 200 PPM
PAGE 3 OF 7

SPECIES: RAT
SEX: MALE
NO. RATS 10

EXAMINATION TIME	Pre Exp	4 Day	10 Day	32 Day	60 Day	95 Day			COMMENTS/SUMMARY
PHYSICAL EXAMINATION									
TREMOR SEVERITY									
None	10	10	10	10	10	10			
Body tremor in response to stimulation									
Head tremors only									
Body tremor slight, does not impair locomotion									
Body tremor moderate, impairs locomotion sightly									
Body tremor severe, prevents locomotion									
TREMOR ONSET									
Resting tremor - occurs at rest									
Intentional tremor - occurs or increases severity only when the animal orients to an object or attempts to move									
HANDLING BEHAVIOR									
Normally alert	8	8	8	6	9	9			
Animal is limp									
Vocalizes but does not resist	2	2	1	3					
Freezes rigidly in hand									
Attempts to escape, may vocalize or bite			1	1	1	1			
NEUROLOGICAL EXAMINATION									
LOCOMOTOR ACTIVITY									
Resting		2	3	4	1	4			
Reduced activity	7	8	7	6	9	6			
Casual scratch, groom/slow spatial orientation	3								
Vigorous scratching, grooming/ mod. spatial orientation									
Vigorous movement; slt. sharp rapid/dart									
Extensive vigorous movement; ext. sharp, rapid/dart									
REARING ACTIVITY									
Does not rear	10	10	7	10	10	10			
Rears on hindlimbs with use of tail			2						
Rears on hindlimbs without use of tail			1						
Falls to side while rearing									
Falls backward while rearing									
TAIL ELEVATION									
Lifted while walking	8	9	10	8	8	6			
Occ. lifted while walking	2	1			1				
Drags end of tail				2	1	4			
Drags entire tail									
Tail held vertically									
Tail held diagonally (45°)									
STATIC LIMB POSITION									
Limbs held normally	10	10	10	10	10	10			
Crossing over medially									
Deviated medially									
Deviated laterally									
ABNORMAL GAIT									
None	10	10	10	10	10	10			
Steppage									
Spastic									
Waddling									
Dysmetric									
Hypermetria									
Duck-walk									
Scissor									
Knuckling-over									
Crossing-over									

FUNCTIONAL OBSERVATIONAL BATTERY - SUMMARY DATA

Number of Animals Showing Each Response

TABLE NO.: 3

SPECIES: RAT
SEX: MALE
NO. RATS 10

STUDY NO.: 880017I1
HAEL NO: 88-0017
ACC. NO.: 907124
DOSE LEVEL: 200 PPM
PAGE 4 OF 7

EXAMINATION TIME	Pre Exp	4 Day	10 Day	32 Day	60 Day	95 Day			COMMENTS/SUMMARY
NEUROLOGICAL EXAMINATION									
HYPOTONIC GAIT - HINDLIMB									
None	10	10	10	10	10	10			
Incomplete extension of tarsus, no impairment of gait									
Incomplete extension of tarsus, stifle, and hip; impaired gait, pelvis tipped									
HYPOTONIC GAIT - FORELIMB									
None	10	10	10	10	10	10			
Incomplete extension of carpus									
Thorax held close to ground									
Thorax can not be lifted off ground									
ATAXIC GAIT									
None	10	10	10	10	10	10			
Slight but definite									
Considerable without falling									
Considerable w/ frequent falls									
Can't walk w/o falling									
HEAD POSITION									
Head held without tilt	10	10	10	10	10	10			
Head held left									
Head held right									
APPROACH RESPONSE									
No reaction	1	6	7	8	7	6			
Rat slowly approaches and sniffs at object	8	3	3	2	3	4			
Rat freezes		1							
Rat pulls away slightly	1								
Jumps or turns away to avoid object									
Jumps at object, attacks or bites									
TOUCH RESPONSE									
No reaction	2	3	6	6	5	7			
Rat turns toward site slowly	4	3	1	1	2	2			
Rat walks forward, away from stimulus	4	4	2	3	3	1			
Rat freezes									
Rat jerks around toward object									
Turns to opposite side of touch			1						
Aggressive or violent reaction w/ or w/o vocalization									
AUDITORY ORIENTATION									
Orients to sound	2	1	5	1	3	1			
Does not orient to sound	8	9	5	9	7	9			
OLFACTORY ORIENTATION									
Orients to swab	10	4	4	2	3	2			
Does not orient to swab		6	6	8	7	8			
RIGHTING RESPONSE									
Rights when turned to either side	10	10	10	10	10	10			
Attempts to right but cannot									
Does not right when turned to either side									
Does not right from left side									
Does not right from right side									
PROPRIOCEPTIVE POSITIONING									
Leaves limb in flexed position									
Extends limb sluggishly									
Extends limb briskly	10	10	10	10	10	10			

FUNCTIONAL OBSERVATIONAL BATTERY - SUMMARY DATA

Number of Animals Showing Each Response

TABLE NO.: 3

STUDY NO.: 880017I1
HAEL NO: 88-0017
ACC. NO.: 907124
DOSE LEVEL: 200 PPM
PAGE 5 OF 7

SPECIES: RAT
SEX: MALE
NO. RATS 10

EXAMINATION TIME	Pre Exp	4 Day	10 Day	32 Day	60 Day	95 Day			COMMENTS/SUMMARY
NEUROLOGICAL EXAMINATION									
TAIL PINCH									
No response	2	1	1	2	1	3			Animal pulls tail away
Rat sluggish turns to look	2	5	1	2		1			D:10 & 32 (2 rats)
Rat walks forward away from stimulus	5	4	6	3	7	4			
Rat freezes, w/wo vocalization									
Rat immediately turns, may bite at side	1			1	2	1			
Rat jumps forward, w/o vocal.									
Exaggerated response, vocal., rapid turning						1			
ABDOMINAL TONE									
Completely flaccid; cavity does not return to normal									
Slightly flaccid; rapid return to normal	2				1				
Slight resistance	7	9	9	10	9	9			
Moderate resistance	1	1	1			1			
Extreme resistance; board-like									
Pain, struggling, or vocalization on palpation									
BLADDER TONE									
Bladder not enlarged	10	10	10	10	10	10			
Bladder enlarged and flaccid									
Bladder enlarged but not flaccid									
MUSCLE TONE									
Muscle is firm but not hard	10	10	10	10	10	10			
Muscle is soft and flabby and may be atrophied									
Muscle is tense and hard									
PASSIVE MANIPULATION									
Limbs are easily manipulated and flaccid									
Limbs are easily manipulated but resistance is encountered on moving	10	10	9	10	9	9			
Limbs are manipulated with strong resistance			1		1	1			
Limbs are manipulated with strong resistance, but relax in a cogwheel fashion									
PUPILLARY SIZE									
Normal	10	10	10	10	10	10			
Mydriasis									
Miosis									
EYE POSITION									
Normal	10	10	10	10	10	10			
Deviated dorsally									
Deviated ventrally									
Deviated medially									
Deviated laterally									
NYSTAGMUS - RESTING									
None	10	10	10	10	10	10			
Nystagmus to the left									
Nystagmus to the right									
NYSTAGMUS - POSITIONAL									
Eyes return to center quickly	10	10	10	10	10	10			
Nystagmus on movement to left									
Nystagmus on movement to right									

FUNCTIONAL OBSERVATIONAL BATTERY - SUMMARY DATA

Number of Animals Showing Each Response

TABLE NO.: 3

SPECIES: RAT
SEX: MALE
NO. RATS 10

STUDY NO.: 88001711
HAEL NO: 88-0017
ACC. NO.: 907124
DOSE LEVEL: 200 PPM
PAGE 6 OF 7

EXAMINATION TIME	Pre Exp	4 Day	10 Day	32 Day	60 Day	95 Day			COMMENTS/SUMMARY
NEUROLOGICAL EXAMINATION									
VISUAL ORIENTATION									
Rat orients toward object as soon as object enters visual field		1							
Rat orients to object but only after object is well into visual field	7	5	4	1	1				
Does not orient toward object	3	4	6	9	9	10			
Orients toward object and responds aggressively									
PALPERBRAL REFLEX									
Eyelids blink	10	10	10	10	10	10			
Eyelids do not blink									
PINNA TOUCH RESPONSE									
No response	5	3	4	7	9	8			
One twitch	4	2	4	3	1	2			
More than one twitch	1	5	1						
Whole body withdraws			1						
EXTENSOR POSTURAL THRUST									
On contact, rat extends hind-limbs to bear weight	10	10	10	10	10	10			
On contact hindlimbs are extended but stumbling or collapse occurs									
On contact limbs are not extended									
HOPPING REFLEX									
Rat hops without falling	10	10	10	10	10	10			
Rat hops but occasionally falls									
Rat does not hop									
Rat hops with difficulty									
VISUAL PLACING									
Early vigorous extension	10	10	10	10	10	10			
Before vibrissae contact									
After slight vibrissae contact									
After marked vibrissae contact									
After nose contact									
Bizarre behav. hampers placing									
None even after nose contact									
GRIP STRENGTH - SEMI-QUANT.									
Active grip, effective	10	10	10	10	10	10			
Unusually strong									
Moderate grip, effective									
Slight grip, not effective									
None									
GRIP STRENGTH - QUANT. (g)									
(FORELIMB) X	519	555	679	705	696	1317			
SD	64	71	86	36	53	361			
(HINDLIMB) X	415	471	597	743	886	1104			
SD	131	128	193	214	153	345			
BIZARRE BEHAVIOR									
None	10	10	10	10	10	10			
Head flick									
Head search									
Hallucinatory									
Compulsive biting									
Self-destructive biting									
Compulsive licking									
Prancing									
Upright walking									
Aimless wandering									
Circling									
Waltzing									
Retropulsion									
Spatial disorientation									
Side-to-side rocking									

FUNCTIONAL OBSERVATIONAL BATTERY - SUMMARY DATA

Number of Animals Showing Each Response

TABLE NO.: 3

STUDY NO.: 88001711
HAEL NO: 88-0017
ACC. NO.: 907124
DOSE LEVEL: 200 PPM
PAGE 7 OF 7

SPECIES: RAT
SEX: MALE
NO. RATS 10

EXAMINATION TIME		Pre Exp	4 Day	10 Day	32 Day	60 Day	95 Day			COMMENTS/SUMMARY
NEUROLOGICAL EXAMINATION										
DEFECATION	X	2.9	2.7	2.5	1.8	1.4	0.8			
	SD	1.7	0.7	1.2	1.8	1.5	1.1			
URINATION	X	1.5	0.8	0.3	0.5	0.3	0.5			
	SD	0.5	0.6	0.5	0.5	0.7	0.7			
SPONTANEOUS VOCALIZATIONS	X	7.4	5.5	7.4	7.6	6.8	10.0			
	SD	8.7	3.7	7.1	4.7	5.0	11.0			

ADDITIONAL COMMENTS: D:4 End of tail is red in color turning darker red at the tip of the tail (1 rat). D:4 Fourth digit on right front paw is bent at joint. Does not seem to hamper animal (1 rat).

3545T

FUNCTIONAL OBSERVATIONAL BATTERY - SUMMARY DATA

Number of Animals Showing Each Response

TABLE NO.: 4

STUDY NO.: 88001711
HAEL NO: 88-0017
ACC. NO.: 907124
DOSE LEVEL: 400 PPM
PAGE 1 OF 7

SPECIES: RAT
SEX: MALE
NO. RATS 10

EXAMINATION TIME	Pre Exp	4 Day	10 Day	32 Day	60 Day	95 Day			COMMENTS/SUMMARY
ACTIVITY STATUS									
HOME CAGE ACTIVITY									
Flattened, w/wo limbs extended									
Lying on side									
Curled up resting or asleep	2	1	2	1	1	4			
Sitting, head held low									
Sitting Normally	4	5	4	3	5	4			
Alert, oriented toward investigator	4	4	4	6	4	2			
Rearing									
Vertical jumping									
Circling purposelessly									
Pacing purposelessly									
Writhing, lying down, wave-like movement of abdomen, alternating limb movements									
Animal in feeder									
FECES AMOUNT									
Normal	10	10	10	10	10	10			
Increased									
Decreased									
FECES COLOR									
Normal	10	10	10	10	10	10			
Pale									
Dark									
FECES CONSISTENCY									
Pellets	10	10	10	10	10	10			
Partially formed									
Unformed, diarrhea									
URINE AMOUNT									
Normal									
Increased									
Decreased									
URINE COLOR									
Normal	10	10	10	10	10	10			
Pale									
Dark yellow									
Possibly blood stained									
Colored by compound									
BEHAVIOR FROM CAGE									
Animal sits quietly and is easily removed	8	9	8	9	9	8			
Vocalization without resisting being picked up	1	1	2	1	1	1			
Animal rears often oriented towards investigator's hand									
Runs around cage, hard to grab, may or may not vocalize	1								
Freezes w/wo vocalization									
Aggressive, tail and throat rattle w/wo vocalization, may attack						1			
PHYSICAL EXAMINATION									
DEATH									
None	10	10	10	10	10	10			
Immediately following dosing									
Delayed following dosing									
HAIR COAT									
Clean and groomed	10	10	10	10	10	10			Alopecia D:32 (4 rats) D:60 (5 rats), D:95 (3 rats)
Unkempt									
Stained by feces									
Stained by urine									
Stained by chemical									
Piloerection									
MUCUS MEMBRANES/EYE/SKIN COLOR									
Pink	10	10	10	10	10	10			
Pale									
Darkened, cyanotic									
Darkened, brown									
Bright, deep red flush									

FUNCTIONAL OBSERVATIONAL BATTERY - SUMMARY DATA

Number of Animals Showing Each Response

TABLE NO.: 4

STUDY NO.: 880017I1
HAEL NO: 88-0017
ACC. NO.: 907124
DOSE LEVEL: 400 PPM
PAGE 2 OF 7

SPECIES: RAT
SEX: MALE
NO. RATS 10

EXAMINATION TIME	Pre Exp	4 Day	10 Day	32 Day	60 Day	95 Day			COMMENTS/SUMMARY
PHYSICAL EXAMINATION									
BODY TEMPERATURE									
Normal to touch	10	10	10	10	10	10			
Hypothermia									
Hyperthermia									
RESPIRATORY RATE									
Normal by observation	10	10	10	10	10	10			
Decreased < 80/min									
Increased > 110/min									
RESPIRATORY CHARACTER									
Normal	10	10	10	10	10	10			
Rales									
Retching									
Dyspneic									
Gasping									
LACRIMATION									
None	10	10	10	10	10	10			
Present									
Chromodacryorrhea									
SALIVATION AMOUNT									
None	10	10	10	10	10	10			
Very slight wet margin sub-maxillary area									
Wet zone 1/4 sub-max area									
Wet zone 1/2 sub-max area									
Wet zone entire sub-max area									
SALIVATION ONSET									
Immediately after dosing									
Stimulated by handling									
Premonitory to convulsion									
EYE PROMINENCE									
Normal	10	10	10	10	10	10			
Exophthalmos									
Enophthalmos									
PALPEBRAL CLOSURE									
Eyelids wide open	10	10	10	10	10	10			
Eyelids slightly drooping									
Eyelids drooping halfway									
Eyelids unopened									
CONVULSION ONSET									
None	10	10	10	10	10	10			
Spontaneous									
Induced by handling, light, sound, or other stimuli (state stimulus)									
TYPE OF CONVULSION									
Chewing only									
Jacksonian, begins with chewing									
Jacksonian, state initial state									
Mild clonic tremors of limbs									
Clonic tremors of entire body									
Tonic convulsion									
Tonic-clonic convulsion									
Opisthotonus									
Emprosthotonus									
Spasmodic jumping									
Agonal or asphyxial convulsion									
Status epilepticus									
LENGTH OF SEIZURE									
LENGTH OF POST-ICTAL PERIOD									
BITING									
None	10	10	10	10	10	10			
Biting of cage									
Self-destructive biting									

FUNCTIONAL OBSERVATIONAL BATTERY - SUMMARY DATA

Number of Animals Showing Each Response

TABLE NO.: 4

SPECIES: RAT
SEX: MALE
NO. RATS 10

STUDY NO.: 880017I1
HAEL NO: 88-0017
ACC. NO.: 907124
DOSE LEVEL: 400 PPM
PAGE 3 OF 7

EXAMINATION TIME	Pre Exp	4 Day	10 Day	32 Day	60 Day	95 Day			COMMENTS/SUMMARY
PHYSICAL EXAMINATION									
TREMOR SEVERITY									
None	10	10	9	10	10	10			
Body tremor in response to stimulation									
Head tremors only									
Body tremor slight, does not impair locomotion			1						
Body tremor moderate, impairs locomotion sightly									
Body tremor severe, prevents locomotion									
TREMOR ONSET									
Resting tremor - occurs at rest			1						
Intentional tremor - occurs or increases severity only when the animal orients to an object or attempts to move									
HANDLING BEHAVIOR									
Normally alert	7	8	8	9	9	8			
Animal is limp									
Vocalizes but does not resist	2	2	2		1				
Freezes rigidly in hand									
Attempts to escape, may vocalize or bite	1			1		2			
NEUROLOGICAL EXAMINATION									
LOCOMOTOR ACTIVITY									
Resting					1				
Reduced activity		1	1	1	1	1			
Casual scratch, groom/slow spatial orientation	8	9	9	9	6	8			
Vigorous scratching, grooming/ mod. spatial orientation	2				2	1			
Vigorous movement; slt. sharp rapid/dart									
Extensive vigorous movement; ext. sharp, rapid/dart									
REARING ACTIVITY									
Does not rear	10	9	8	10	9	10			
Rears on hindlimbs with use of tail		1	2		1				
Rears on hindlimbs without use of tail									
Falls to side while rearing									
Falls backward while rearing									
TAIL ELEVATION									
Lifted while walking	7	9	7	9	9	7			
Occ. lifted while walking	2	1	1						
Drags end of tail	1		2	1	1	3			
Drags entire tail									
Tail held vertically									
Tail held diagonally (45°)									
STATIC LIMB POSITION									
Limbs held normally	10	10	10	10	10	10			
Crossing over medially									
Deviated medially									
Deviated laterally									
ABNORMAL GAIT									
None	10	10	10	10	10	10			
Steppage									
Spastic									
Waddling									
Dysmetric									
Hypermetria									
Duck-walk									
Scissor									
Knuckling-over									
Crossing-over									

FUNCTIONAL OBSERVATIONAL BATTERY - SUMMARY DATA

Number of Animals Showing Each Response

TABLE NO.: 4

STUDY NO.: 880017I1
HAEL NO: 88-0017
ACC. NO.: 907124
DOSE LEVEL: 400 PPM
PAGE 4 OF 7

SPECIES: RAT
SEX: MALE
NO. RATS 10

EXAMINATION TIME	Pre Exp	4 Day	10 Day	32 Day	60 Day	95 Day			COMMENTS/SUMMARY
NEUROLOGICAL EXAMINATION									
HYPOTONIC GAIT - HINDLIMB									
None	10	10	10	10	10	10			
Incomplete extension of tarsus, no impairment of gait									
Incomplete extension of tarsus, stifle, and hip; impaired gait, pelvis tipped									
HYPOTONIC GAIT - FORELIMB									
None	10	10	10	10	10	10			
Incomplete extension of carpus									
Thorax held close to ground									
Thorax can not be lifted off ground									
ATAXIC GAIT									
None	10	10	10	10	10	10			
Slight but definite									
Considerable without falling									
Considerable w/ frequent falls									
Can't walk w/o falling									
HEAD POSITION									
Head held without tilt	10	10	10	10	10	10			
Head held left									
Head held right									
APPROACH RESPONSE									
No reaction	7	2	5	8	9	6			
Rat slowly approaches and sniffs at object	1	7	5		1	4			
Rat freezes									
Rat pulls away slightly	1	1		2					
Jumps or turns away to avoid object	1								
Jumps at object, attacks or bites									
TOUCH RESPONSE									
No reaction	5	2	2	5	4	4			
Rat turns toward site slowly	2	3	1	2	3	4			
Rat walks forward, away from stimulus	2	5	7	3	1	1			
Rat freezes									
Rat jerks around toward object									
Turns to opposite side of touch	1				2	1			
Aggressive or violent reaction w/ or w/o vocalization									
AUDITORY ORIENTATION									
Orients to sound	4	3	3	3	1	4			
Does not orient to sound	6	7	7	7	9	6			
OLFACTORY ORIENTATION									
Orients to swab	10	8	3	7	5	2			
Does not orient to swab		2	7	3	5	8			
RIGHTING RESPONSE									
Rights when turned to either side	10	10	10	10	10	10			
Attempts to right but cannot									
Does not right when turned to either side									
Does not right from left side									
Does not right from right side									
PROPRIOCEPTIVE POSITIONING									
Leaves limb in flexed position									
Extends limb sluggishly									
Extends limb briskly	10	10	10	10	10	10			

FUNCTIONAL OBSERVATIONAL BATTERY - SUMMARY DATA

Number of Animals Showing Each Response

TABLE NO.: 4

SPECIES: RAT
SEX: MALE
NO. RATS 10

STUDY NO.: 880017I1
HAEL NO: 88-0017
ACC. NO.: 907124
DOSE LEVEL: 400 PPM
PAGE 5 OF 7

EXAMINATION TIME	Pre Exp	4 Day	10 Day	32 Day	60 Day	95 Day			COMMENTS/SUMMARY
NEUROLOGICAL EXAMINATION									
TAIL PINCH									
No response	1		2	3	3				Animal pulls tail away
Rat sluggish turns to look	1	4	2	4	1	1			D:4, 60, & 95 (2 rats)
Rat walks forward away from stimulus	6	4	5	1	2	5			D:10 & 32 (1 rat)
Rat freezes, w/wo vocalization									
Rat immediately turns, may bite at side	2			1	2	1			
Rat jumps forward, w/o vocal.									
Exaggerated response, vocal., rapid turning						1			
ABDOMINAL TONE									
Completely flaccid; cavity does not return to normal									
Slightly flaccid; rapid return to normal									
Slight resistance	9	9	7	10	9	8			
Moderate resistance	1	1	3		1	2			
Extreme resistance; board-like									
Pain, struggling, or vocalization on palpation									
BLADDER TONE									
Bladder not enlarged	10	10	10	10	10	10			
Bladder enlarged and flaccid									
Bladder enlarged but not flaccid									
MUSCLE TONE									
Muscle is firm but not hard	10	10	10	10	10	10			
Muscle is soft and flabby and may be atrophied									
Muscle is tense and hard									
PASSIVE MANIPULATION									
Limbs are easily manipulated and flaccid									
Limbs are easily manipulated but resistance is encountered on moving	10	10	10	10	10	9			
Limbs are manipulated with strong resistance						1			
Limbs are manipulated with strong resistance, but relax in a cogwheel fashion									
PUPILLARY SIZE									
Normal	10	10	10	10	10	10			
Mydriasis									
Miosis									
EYE POSITION									
Normal	10	10	10	10	10	10			
Deviated dorsally									
Deviated ventrally									
Deviated medially									
Deviated laterally									
NYSTAGMUS - RESTING									
None	10	10	10	10	10	10			
Nystagmus to the left									
Nystagmus to the right									
NYSTAGMUS - POSITIONAL									
Eyes return to center quickly	10	10	10	10	10	10			
Nystagmus on movement to left									
Nystagmus on movement to right									

FUNCTIONAL OBSERVATIONAL BATTERY - SUMMARY DATA

Number of Animals Showing Each Response

TABLE NO.: 4

STUDY NO.: 88001711
HAEL NO: 88-0017
ACC. NO.: 907124
DOSE LEVEL: 400 PPM
PAGE 6 OF 7

SPECIES: RAT
SEX: MALE
NO. RATS 10

EXAMINATION TIME	Pre Exp	4 Day	10 Day	32 Day	60 Day	95 Day			COMMENTS/SUMMARY
NEUROLOGICAL EXAMINATION									
VISUAL ORIENTATION									
Rat orients toward object as soon as object enters visual field	2		1	1		1			
Rat orients to object but only after object is well into visual field	3	5	5	2	2				
Does not orient toward object	5	5	4	7	8	9			
Orients toward object and responds aggressively									
PALPERBRAL REFLEX									
Eyelids blink	10	10	10	10	10	10			
Eyelids do not blink									
PINNA TOUCH RESPONSE									
No response	3	1	5	4	7	6			
One twitch	4	4	3	6	1	4			
More than one twitch	2	5	2		2				
Whole body withdraws	1								
EXTENSOR POSTURAL THRUST									
On contact, rat extends hind-limbs to bear weight	10	10	10	10	10	10			
On contact hindlimbs are extended but stumbling or collapse occurs									
On contact limbs are not extended									
HOPPING REFLEX									
Rat hops without falling	10	10	10	10	10	10			
Rat hops but occasionally falls									
Rat does not hop									
Rat hops with difficulty									
VISUAL PLACING									
Early vigorous extension	10	10	10	10	10	10			
Before vibrissae contact									
After slight vibrissae contact									
After marked vibrissae contact									
After nose contact									
Bizarre behav. hampers placing									
None even after nose contact									
GRIP STRENGTH - SEMI-QUANT.									
Active grip, effective	8	10	10	10	10	10			
Unusually strong									
Moderate grip, effective	2								
Slight grip, not effective									
None									
GRIP STRENGTH - QUANT. (g)									
(FORELIMB) X	568	596	659	691	666	1315			Grip strength of 1230 was maximum limit on guage. D:60 Hindlimb (1 rat)
SD	91	102	85	41	26	291			
(HINDLIMB) X	357	472	591	717	893	1146			
SD	117	133	122	194	196	292			
BIZARRE BEHAVIOR									
None	10	10	10	10	10	10			
Head flick									
Head search									
Hallucinatory									
Compulsive biting									
Self-destructive biting									
Compulsive licking									
Prancing									
Upright walking									
Aimless wandering									
Circling									
Waltzing									
Retropulsion									
Spatial disorientation									
Side-to-side rocking									

FUNCTIONAL OBSERVATIONAL BATTERY - SUMMARY DATA

Number of Animals Showing Each Response

TABLE NO.: 4

STUDY NO.: 880017I1
HAEL NO: 88-0017
ACC. NO.: 907124
DOSE LEVEL: 400 PPM
PAGE 7 OF 7

SPECIES: RAT
SEX: MALE
NO. RATS 10

EXAMINATION TIME		Pre Exp	4 Day	10 Day	32 Day	60 Day	95 Day			COMMENTS/SUMMARY
NEUROLOGICAL EXAMINATION										
DEFECATION	X	3.5	2.2	1.8	1.7	1.9	1.4			
	SD	2.0	1.5	2.1	1.9	2.5	2.3			
URINATION	X	1.0	0.8	0.5	0.4	0.4	0.8			
	SD	0.8	0.8	0.5	0.7	0.7	1.2			
SPONTANEOUS VOCALIZATIONS	X	9.1	7.9	7.1	4.9	6.7	9.3			
	SD	7.3	7.6	8.6	3.6	7.6	11.2			

ADDITIONAL COMMENTS: D:60 Ear Twitches were observed (1 rat); Animal was observed to quiver (1 rat).

3546T

FUNCTIONAL OBSERVATIONAL BATTERY - SUMMARY DATA

Number of Animals Showing Each Response

TABLE NO.: 5

SPECIES: RAT
SEX: FEMALE
NO. RATS 10

STUDY NO.: 880017I2
HAEL NO: 88-0017
ACC. NO.: 907124
DOSE LEVEL: 0 PPM
PAGE 1 OF 7

EXAMINATION TIME	Pre Exp	4 Day	10 Day	32 Day	60 Day	95 Day			COMMENTS/SUMMARY
ACTIVITY STATUS									
HOME CAGE ACTIVITY									
Flattened, w/wo limbs extended									
Lying on side									
Curled up resting or asleep	3	2	3	1	1	2			
Sitting, head held low									
Sitting Normally	4	4	4	3	2	2			
Alert, oriented toward investigator	3	4	3	6	7	6			
Rearing									
Vertical jumping									
Circling purposelessly									
Pacing purposelessly									
Writhing, lying down, wave-like movement of abdomen, alternating limb movements									
Animal in feeder									
FECES AMOUNT									
Normal	10	10	10	10	10	10			
Increased									
Decreased									
FECES COLOR									
Normal	10	10	10	10	10	10			
Pale									
Dark									
FECES CONSISTENCY									
Pellets	9	10	10	10	10	10			
Partially formed	1								
Unformed, diarrhea									
URINE AMOUNT									
Normal	10	10	10	10	10	10			
Increased									
Decreased									
URINE COLOR									
Normal	10	10	10	10	10	10			
Pale									
Dark yellow									
Possibly blood stained									
Colored by compound									
BEHAVIOR FROM CAGE									
Animal sits quietly and is easily removed	10	8	9	10	10	10			
Vocalization without resisting being picked up		1	1						
Animal rears often oriented towards investigator's hand									
Runs around cage, hard to grab, may or may not vocalize		1							
Freezes w/wo vocalization									
Aggressive, tail and throat rattle w/wo vocalization, may attack									
PHYSICAL EXAMINATION									
DEATH									
None	10	10	10	10	10	10			
Immediately following dosing									
Delayed following dosing									
HAIR COAT									
Clean and groomed	10	10	10	10	9	9			Alopecia D:60 & 95 (1 rat)
Unkempt									
Stained by feces									
Stained by urine									
Stained by chemical									
Piloerection									
MUCUS MEMBRANES/EYE/SKIN COLOR									
Pink	10	10	10	10	10	10			
Pale									
Darkened, cyanotic									
Darkened, brown									
Bright, deep red flush									

FUNCTIONAL OBSERVATIONAL BATTERY - SUMMARY DATA

Number of Animals Showing Each Response

TABLE NO.: 5

SPECIES: RAT
SEX: FEMALE
NO. RATS 10

STUDY NO.: 880017I2
HAEL NO: 88-0017
ACC. NO.: 907124
DOSE LEVEL: 0 PPM
PAGE 2 OF 7

EXAMINATION TIME	Pre Exp	4 Day	10 Day	32 Day	60 Day	95 Day			COMMENTS/SUMMARY
PHYSICAL EXAMINATION									
BODY TEMPERATURE									
Normal to touch	10	10	10	10	10	10			
Hypothermia									
Hyperthermia									
RESPIRATORY RATE									
Normal by observation	10	10	10	10	10	10			
Decreased < 80/min									
Increased > 110/min									
RESPIRATORY CHARACTER									
Normal	10	10	10	10	10	10			
Rales									
Retching									
Dyspneic									
Gasping									
LACRIMATION									
None	10	10	10	10	10	10			
Present									
Chromodacryorrhea									
SALIVATION AMOUNT									
None	10	10	10	10	10	10			
Very slight wet margin sub-maxillary area									
Wet zone 1/4 sub-max area									
Wet zone 1/2 sub-max area									
Wet zone entire sub-max area									
SALIVATION ONSET									
Immediately after dosing									
Stimulated by handling									
Premonitory to convulsion									
EYE PROMINENCE									
Normal	10	10	10	10	10	10			
Exophthalmos									
Enophthalmos									
PALPEBRAL CLOSURE									
Eyelids wide open	10	10	10	10	10	10			
Eyelids slightly drooping									
Eyelids drooping halfway									
Eyelids unopened									
CONVULSION ONSET									
None	10	10	10	10	10	10			
Spontaneous									
Induced by handling, light, sound, or other stimuli (state stimulus)									
TYPE OF CONVULSION									
Chewing only									
Jacksonian, begins with chewing									
Jacksonian, state initial state									
Mild clonic tremors of limbs									
Clonic tremors of entire body									
Tonic convulsion									
Tonic-clonic convulsion									
Opisthotonus									
Emprosthotonus									
Spasmodic jumping									
Agonal or asphyxial convulsion									
Status epilepticus									
LENGTH OF SEIZURE									
LENGTH OF POST-ICTAL PERIOD									
BITING									
None	10	10	10	10	10	10			
Biting of cage									
Self-destructive biting									

FUNCTIONAL OBSERVATIONAL BATTERY - SUMMARY DATA

Number of Animals Showing Each Response

SPECIES: RAT
SEX: FEMALE
NO. RATS 10

TABLE NO.: 5

STUDY NO.: 880017I2
HAEL NO: 88-0017
ACC. NO.: 907124
DOSE LEVEL: 0 PPM
PAGE 3 OF 7

EXAMINATION TIME	Pre Exp	4 Day	10 Day	32 Day	60 Day	95 Day			COMMENTS/SUMMARY
PHYSICAL EXAMINATION									
TREMOR SEVERITY									
None	9	10	10	9	9	10			
Body tremor in response to stimulation				1					
Head tremors only					1				
Body tremor slight, does not impair locomotion	1								
Body tremor moderate, impairs locomotion sightly									
Body tremor severe, prevents locomotion									
TREMOR ONSET									
Resting tremor - occurs at rest	1			1	1				
Intentional tremor - occurs or increases severity only when the animal orients to an object or attempts to move									
HANDLING BEHAVIOR									
Normally alert	9	8	8	9	8	10			
Animal is limp									
Vocalizes but does not resist	1	2	2	1					
Freezes rigidly in hand									
Attempts to escape, may vocalize or bite					2				
NEUROLOGICAL EXAMINATION									
LOCOMOTOR ACTIVITY									
Resting									
Reduced activity					1	3			
Casual scratch, groom/slow spatial orientation	6	9	9	9	9	6			
Vigorous scratching, grooming/ mod. spatial orientation	4	1	1	1		1			
Vigorous movement; slt. sharp rapid/dart									
Extensive vigorous movement; ext. sharp, rapid/dart									
REARING ACTIVITY									
Does not rear	10	9	10	10	10	9			
Rears on hindlimbs with use of tail		1				1			
Rears on hindlimbs without use of tail									
Falls to side while rearing									
Falls backward while rearing									
TAIL ELEVATION									
Lifted while walking	10	10	10	10	9	9			
Occ. lifted while walking					1	1			
Drags end of tail									
Drags entire tail									
Tail held vertically									
Tail held diagonally (45°)									
STATIC LIMB POSITION									
Limbs held normally	10	10	10	10	10	10			
Crossing over medially									
Deviated medially									
Deviated laterally									
ABNORMAL GAIT									
None	10	10	10	10	10	9			Rat walks up on toes - Hindlimb
Steppage									D:95 (1 rat)
Spastic									
Waddling									
Dysmetric									
Hypermetria									
Duck-walk									
Scissor									
Knuckling-over									
Crossing-over									

FUNCTIONAL OBSERVATIONAL BATTERY - SUMMARY DATA

Number of Animals Showing Each Response

TABLE NO.: 5

SPECIES: RAT
SEX: FEMALE
NO. RATS 10

STUDY NO.: 880017I2
HAEL NO: 88-0017
ACC. NO.: 907124
DOSE LEVEL: 0 PPM
PAGE 4 OF 7

EXAMINATION TIME	Pre Exp	4 Day	10 Day	32 Day	60 Day	95 Day			COMMENTS/SUMMARY
NEUROLOGICAL EXAMINATION									
HYPOTONIC GAIT - HINDLIMB									
None	10	10	10	10	10	10			
Incomplete extension of tarsus, no impairment of gait									
Incomplete extension of tarsus, stifle, and hip; impaired gait, pelvis tipped									
HYPOTONIC GAIT - FORELIMB									
None	10	10	10	10	10	10			
Incomplete extension of carpus									
Thorax held close to ground									
Thorax can not be lifted off ground									
ATAXIC GAIT									
None	10	10	10	10	10	10			
Slight but definite									
Considerable without falling									
Considerable w/ frequent falls									
Can't walk w/o falling									
HEAD POSITION									
Head held without tilt	10	10	10	10	10	10			
Head held left									
Head held right									
APPROACH RESPONSE									
No reaction		2	3	5	7	5			
Rat slowly approaches and sniffs at object	9	8	5	5	3	5			
Rat freezes	1		2						
Rat pulls away slightly									
Jumps or turns away to avoid object									
Jumps at object, attacks or bites									
TOUCH RESPONSE									
No reaction	1			3	5	3			
Rat turns toward site slowly	1	2	3	2	1	2			
Rat walks forward, away from stimulus	7	8	7	4	4	4			
Rat freezes	1								
Rat jerks around toward object									
Turns to opposite side of touch				1		1			
Aggressive or violent reaction w/ or w/o vocalization									
AUDITORY ORIENTATION									
Orients to sound	3	5	5	2	1	3			
Does not orient to sound	7	5	5	8	9	7			
OLFACTORY ORIENTATION									
Orients to swab	9	7	7	4	3	4			
Does not orient to swab	1	3	3	6	7	6			
RIGHTING RESPONSE									
Rights when turned to either side	10	10	10	10	10	10			
Attempts to right but cannot									
Does not right when turned to either side									
Does not right from left side									
Does not right from right side									
PROPRIOCEPTIVE POSITIONING									
Leaves limb in flexed position									
Extends limb sluggishly									
Extends limb briskly	10	10	10	10	10	10			

FUNCTIONAL OBSERVATIONAL BATTERY - SUMMARY DATA

Number of Animals Showing Each Response

TABLE NO.: 5

SPECIES: RAT
SEX: FEMALE
NO. RATS 10

STUDY NO.: 88001712
HAEL NO: 88-0017
ACC. NO.: 907124
DOSE LEVEL: 0 PPM
PAGE 5 OF 7

EXAMINATION TIME	Pre Exp	4 Day	10 Day	32 Day	60 Day	95 Day			COMMENTS/SUMMARY
NEUROLOGICAL EXAMINATION									
TAIL PINCH									
No response	2	2	2	3	1	4			Animal jerks tail away
Rat sluggish turns to look	2	1	4	1	1	1			D:10 (1 rat)
Rat walks forward away from stimulus	6	6	4	5	7	4			
Rat freezes, w/wo vocalization									
Rat immediately turns, may bite at side				1					
Rat jumps forward, w/o vocal.									
Exaggerated response, vocal., rapid turning					1	1			
ABDOMINAL TONE									
Completely flaccid; cavity does not return to normal									
Slightly flaccid; rapid return to normal			3						
Slight resistance	6	10	7	10	8	10			
Moderate resistance	4				2				
Extreme resistance; board-like									
Pain, struggling, or vocalization on palpation									
BLADDER TONE									
Bladder not enlarged	10	10	10	10	10	10			
Bladder enlarged and flaccid									
Bladder enlarged but not flaccid									
MUSCLE TONE									
Muscle is firm but not hard	10	10	10	10	10	10			
Muscle is soft and flabby and may be atrophied									
Muscle is tense and hard									
PASSIVE MANIPULATION									
Limbs are easily manipulated and flaccid									
Limbs are easily manipulated but resistance is encountered on moving	10	10	10	10	9	10			
Limbs are manipulated with strong resistance					1				
Limbs are manipulated with strong resistance, but relax in a cogwheel fashion									
PUPILLARY SIZE									
Normal	10	10	10	10	10	10			
Mydriasis									
Miosis									
EYE POSITION									
Normal	10	10	10	10	10	10			
Deviated dorsally									
Deviated ventrally									
Deviated medially									
Deviated laterally									
NYSTAGMUS - RESTING									
None	10	10	10	10	10	10			
Nystagmus to the left									
Nystagmus to the right									
NYSTAGMUS - POSITIONAL									
Eyes return to center quickly	10	10	10	10	10	10			
Nystagmus on movement to left									
Nystagmus on movement to right									

FUNCTIONAL OBSERVATIONAL BATTERY - SUMMARY DATA

Number of Animals Showing Each Response

TABLE NO.: 5

STUDY NO.: 880017I2
HAEL NO: 88-0017
ACC. NO.: 907124
DOSE LEVEL: 0 PPM
PAGE 6 OF 7

SPECIES: RAT
SEX: FEMALE
NO. RATS 10

EXAMINATION TIME	Pre Exp	4 Day	10 Day	32 Day	60 Day	95 Day			COMMENTS/SUMMARY
NEUROLOGICAL EXAMINATION									
VISUAL ORIENTATION									
Rat orients toward object as soon as object enters visual field		1	2	1	1				
Rat orients to object but only after object is well into visual field	6	5	5	1	1	2			
Does not orient toward object	4	4	3	8	8	8			
Orients toward object and responds aggressively									
PALPERBRAL REFLEX									
Eyelids blink	10	10	10	10	10	10			
Eyelids do not blink									
PINNA TOUCH RESPONSE									
No response	2	3	1	4	6	7			
One twitch	5	6	7	6	4	3			
More than one twitch	3	1	2						
Whole body withdraws									
EXTENSOR POSTURAL THRUST									
On contact, rat extends hind-limbs to bear weight	10	10	10	10	10	10			
On contact hindlimbs are extended but stumbling or collapse occurs									
On contact limbs are not extended									
HOPPING REFLEX									
Rat hops without falling	10	10	10	10	10	10			
Rat hops but occasionally falls									
Rat does not hop									
Rat hops with difficulty									
VISUAL PLACING									
Early vigorous extension	10	10	10	10	10	10			
Before vibrissae contact									
After slight vibrissae contact									
After marked vibrissae contact									
After nose contact									
Bizarre behav. hampers placing									
None even after nose contact									
GRIP STRENGTH - SEMI-QUANT.									
Active grip, effective	9	10	10	9	10	10			
Unusually strong				1					
Moderate grip, effective									
Slight grip, not effective	1								
None									
GRIP STRENGTH - QUANT. (g)									
(FORELIMB) X	502	692	658	697	692	1183			
SD	92	73	37	43	47	287			
(HINDLIMB) X	509	616	616	771	806	914			
SD	178	190	185	253	158	268			
BIZARRE BEHAVIOR									
None	10	10	10	10	10	10			
Head flick									
Head search									
Hallucinatory									
Compulsive biting									
Self-destructive biting									
Compulsive licking									
Prancing									
Upright walking									
Aimless wandering									
Circling									
Waltzing									
Retropulsion									
Spatial disorientation									
Side-to-side rocking									

FUNCTIONAL OBSERVATIONAL BATTERY - SUMMARY DATA

Number of Animals Showing Each Response

TABLE NO.: 5

STUDY NO.: 88001712
HAEL NO: 88-0017
ACC. NO.: 907124
DOSE LEVEL: 0 PPM
PAGE 7 OF 7

SPECIES: RAT
SEX: FEMALE
NO. RATS 10

EXAMINATION TIME		Pre Exp	4 Day	10 Day	32 Day	60 Day	95 Day			COMMENTS/SUMMARY
NEUROLOGICAL EXAMINATION										
DEFECATION	X	1.6	0.4	0.9	0.1	0.4	0.2			
	SD	1.6	1.0	1.5	0.3	0.8	0.4			
URINATION	X	0.7	0.3	0.5	0.4	0.7	0.5			
	SD	0.5	0.5	0.7	0.7	0.8	0.8			
SPONTANEOUS VOCALIZATIONS	X	8.3	9.8	7.2	7.4	8.0	8.5			
	SD	4.7	6.3	3.6	3.0	7.5	4.7			

ADDITIONAL COMMENTS:

3554T

FUNCTIONAL OBSERVATIONAL BATTERY - SUMMARY DATA

Number of Animals Showing Each Response

TABLE NO.: 6

STUDY NO.: 880017I2
HAEL NO: 88-0017
ACC. NO.: 907124
DOSE LEVEL: 100 PPM
PAGE 1 OF 7

SPECIES: RAT
SEX: FEMALE
NO. RATS 10

EXAMINATION TIME	Pre Exp	4 Day	10 Day	32 Day	60 Day	95 Day			COMMENTS/SUMMARY
ACTIVITY STATUS									
HOME CAGE ACTIVITY									
Flattened, w/wo limbs extended									
Lying on side									
Curled up resting or asleep	1		2	1	1	2			
Sitting, head held low									
Sitting Normally	1	4	2	3	5	3			
Alert, oriented toward investigator	8	6	6	6	4	5			
Rearing									
Vertical jumping									
Circling purposelessly									
Pacing purposelessly									
Writhing, lying down, wave-like movement of abdomen, alternating limb movements									
Animal in feeder									
FECES AMOUNT									
Normal	10	10	10	10	10	10			
Increased									
Decreased									
FECES COLOR									
Normal	10	10	10	10	10	10			
Pale									
Dark									
FECES CONSISTENCY									
Pellets	10	10	10	10	10	10			
Partially formed									
Unformed, diarrhea									
URINE AMOUNT									
Normal									
Increased									
Decreased									
URINE COLOR									
Normal	10	10	10	10	10	10			
Pale									
Dark yellow									
Possibly blood stained									
Colored by compound									
BEHAVIOR FROM CAGE									
Animal sits quietly and is easily removed	7	6	9	10	9	9			
Vocalization without resisting being picked up		3	1		1	1			
Animal rears often oriented towards investigator's hand									
Runs around cage, hard to grab, may or may not vocalize	2	1							
Freezes w/wo vocalization									
Aggressive, tail and throat rattle w/wo vocalization, may attack	1								
PHYSICAL EXAMINATION									
DEATH									
None	10	10	10	10	10	10			
Immediately following dosing									
Delayed following dosing									
HAIR COAT									
Clean and groomed	10	10	10	10	10	10			Alopecia D:32 (2 rats), D:60 & 95 (3 rats)
Unkempt									
Stained by feces									
Stained by urine									
Stained by chemical									
Piloerection									
MUCUS MEMBRANES/EYE/SKIN COLOR									
Pink	10	10	10	10	10	10			
Pale									
Darkened, cyanotic									
Darkened, brown									
Bright, deep red flush									

FUNCTIONAL OBSERVATIONAL BATTERY - SUMMARY DATA

Number of Animals Showing Each Response

TABLE NO.: 6

STUDY NO.: 880017I2
HAEL NO: 88-0017
ACC. NO.: 907124
DOSE LEVEL: 100 PPM
PAGE 2 OF 7

SPECIES: RAT
SEX: FEMALE
NO. RATS 10

EXAMINATION TIME	Pre Exp	4 Day	10 Day	32 Day	60 Day	95 Day			COMMENTS/SUMMARY
PHYSICAL EXAMINATION									
BODY TEMPERATURE									
Normal to touch	10	10	10	10	10	10			
Hypothermia									
Hyperthermia									
RESPIRATORY RATE									
Normal by observation	10	10	10	10	10	10			
Decreased < 80/min									
Increased > 110/min									
RESPIRATORY CHARACTER									
Normal	10	10	10	10	10	10			
Rales									
Retching									
Dyspneic									
Gasping									
LACRIMATION									
None	10	10	10	10	10	10			
Present									
Chromodacryorrhea									
SALIVATION AMOUNT									
None	10	10	10	10	10	10			
Very slight wet margin sub-maxillary area									
Wet zone 1/4 sub-max area									
Wet zone 1/2 sub-max area									
Wet zone entire sub-max area									
SALIVATION ONSET									
Immediately after dosing									
Stimulated by handling									
Premonitory to convulsion									
EYE PROMINENCE									
Normal	10	10	10	10	10	10			
Exophthalmos									
Enophthalmos									
PALPEBRAL CLOSURE									
Eyelids wide open	10	10	10	10	10	10			
Eyelids slightly drooping									
Eyelids drooping halfway									
Eyelids unopened									
CONVULSION ONSET									
None	10	10	10	10	10	10			
Spontaneous									
Induced by handling, light, sound, or other stimuli (state stimulus)									
TYPE OF CONVULSION									
Chewing only									
Jacksonian, begins with chewing									
Jacksonian, state initial state									
Mild clonic tremors of limbs									
Clonic tremors of entire body									
Tonic convulsion									
Tonic-clonic convulsion									
Opisthotonus									
Emprosthotonus									
Spasmodic jumping									
Agonal or asphyxial convulsion									
Status epilepticus									
LENGTH OF SEIZURE									
LENGTH OF POST-ICTAL PERIOD									
BITING									
None	10	10	10	10	10	10			
Biting of cage									
Self-destructive biting									

FUNCTIONAL OBSERVATIONAL BATTERY - SUMMARY DATA

Number of Animals Showing Each Response

TABLE NO.: 6

SPECIES: RAT
SEX: FEMALE
NO. RATS 10

STUDY NO.: 880017I2
HAEL NO: 88-0017
ACC. NO.: 907124
DOSE LEVEL: 100 PPM
PAGE 3 OF 7

EXAMINATION TIME	Pre Exp	4 Day	10 Day	32 Day	60 Day	95 Day			COMMENTS/SUMMARY
PHYSICAL EXAMINATION									
TREMOR SEVERITY									
None	10	9	9	9	9	10			
Body tremor in response to stimulation		1		1					
Head tremors only					1				
Body tremor slight, does not impair locomotion			1						
Body tremor moderate, impairs locomotion sightly									
Body tremor severe, prevents locomotion									
TREMOR ONSET									
Resting tremor - occurs at rest		1	1	1	1				
Intentional tremor - occurs or increases severity only when the animal orients to an object or attempts to move									
HANDLING BEHAVIOR									
Normally alert	6	6	7	9	8	8			
Animal is limp									
Vocalizes but does not resist	2	4	3	1	2	2			
Freezes rigidly in hand									
Attempts to escape, may vocalize or bite	2								
NEUROLOGICAL EXAMINATION									
LOCOMOTOR ACTIVITY									
Resting									
Reduced activity				1		3			
Casual scratch, groom/slow spatial orientation	4	7	7	7	8	6			
Vigorous scratching, grooming/ mod. spatial orientation	6	3	3	2	2	1			
Vigorous movement; slt. sharp rapid/dart									
Extensive vigorous movement; ext. sharp, rapid/dart									
REARING ACTIVITY									
Does not rear	10	9	10	9	10	10			
Rears on hindlimbs with use of tail		1							
Rears on hindlimbs without use of tail				1					
Falls to side while rearing									
Falls backward while rearing									
TAIL ELEVATION									
Lifted while walking	10	10	10	10	9	9			
Occ. lifted while walking					1	1			
Drags end of tail									
Drags entire tail									
Tail held vertically									
Tail held diagonally (45°)									
STATIC LIMB POSITION									
Limbs held normally	10	10	10	10	10	10			
Crossing over medially									
Deviated medially									
Deviated laterally									
ABNORMAL GAIT									
None	10	10	10	10	10	10			
Steppage									
Spastic									
Waddling									
Dysmetric									
Hypermetria									
Duck-walk									
Scissor									
Knuckling-over									
Crossing-over									

FUNCTIONAL OBSERVATIONAL BATTERY - SUMMARY DATA

Number of Animals Showing Each Response

TABLE NO.: 6

SPECIES: RAT
SEX: FEMALE
NO. RATS 10

STUDY NO.: 880017I2
HAEL NO: 88-0017
ACC. NO.: 907124
DOSE LEVEL: 100 PPM
PAGE 4 OF 7

EXAMINATION TIME	Pre Exp	4 Day	10 Day	32 Day	60 Day	95 Day			COMMENTS/SUMMARY
NEUROLOGICAL EXAMINATION									
HYPOTONIC GAIT - HINDLIMB									
None	10	10	10	10	10	10			
Incomplete extension of tarsus, no impairment of gait									
Incomplete extension of tarsus, stifle, and hip; impaired gait, pelvis tipped									
HYPOTONIC GAIT - FORELIMB									
None	10	10	10	10	10	10			
Incomplete extension of carpus									
Thorax held close to ground									
Thorax can not be lifted off ground									
ATAXIC GAIT									
None	10	10	10	10	10	10			
Slight but definite									
Considerable without falling									
Considerable w/ frequent falls									
Can't walk w/o falling									
HEAD POSITION									
Head held without tilt	10	10	10	10	10	10			
Head held left									
Head held right									
APPROACH RESPONSE									
No reaction	5	3	4	6	7	7			
Rat slowly approaches and sniffs at object	3	7	5	4	2	3			
Rat freezes									
Rat pulls away slightly	1		1		1				
Jumps or turns away to avoid object	1								
Jumps at object, attacks or bites									
TOUCH RESPONSE									
No reaction	1	1	1	4	5	8			
Rat turns toward site slowly	1	1	2	2	1				
Rat walks forward, away from stimulus	8	8	7	3	3	1			
Rat freezes									
Rat jerks around toward object									
Turns to opposite side of touch					1				
Aggressive or violent reaction w/ or w/o vocalization				1		1			
AUDITORY ORIENTATION									
Orients to sound	4	4	4	4	1	1			
Does not orient to sound	6	6	6	6	9	9			
OLFACTORY ORIENTATION									
Orients to swab	8	6	6	5	5	1			
Does not orient to swab	2	4	4	5	5	9			
RIGHTING RESPONSE									
Rights when turned to either side	10	10	10	10	10	10			
Attempts to right but cannot									
Does not right when turned to either side									
Does not right from left side									
Does not right from right side									
PROPRIOCEPTIVE POSITIONING									
Leaves limb in flexed position									
Extends limb sluggishly									
Extends limb briskly	10	10	10	10	10	10			

FUNCTIONAL OBSERVATIONAL BATTERY - SUMMARY DATA

Number of Animals Showing Each Response

TABLE NO.: 6

SPECIES: RAT
SEX: FEMALE
NO. RATS 10

STUDY NO.: 880017I2
HAEL NO: 88-0017
ACC. NO.: 907124
DOSE LEVEL: 100 PPM
PAGE 5 OF 7

EXAMINATION TIME	Pre Exp	4 Day	10 Day	32 Day	60 Day	95 Day			COMMENTS/SUMMARY
NEUROLOGICAL EXAMINATION									
TAIL PINCH									
No response	2		3	1		2			
Rat sluggish turns to look			2		4	1			
Rat walks forward away from stimulus	7	10	4	9	5	6			
Rat freezes, w/wo vocalization									
Rat immediately turns, may bite at side			1		1	1			
Rat jumps forward, w/o vocal.									
Exaggerated response, vocal., rapid turning	1								
ABDOMINAL TONE									
Completely flaccid; cavity does not return to normal									
Slightly flaccid; rapid return to normal			1						
Slight resistance	7	10	9	10	10	10			
Moderate resistance	3								
Extreme resistance; board-like									
Pain, struggling, or vocalization on palpation									
BLADDER TONE									
Bladder not enlarged	10	10	10	10	10	10			
Bladder enlarged and flaccid									
Bladder enlarged but not flaccid									
MUSCLE TONE									
Muscle is firm but not hard	10	10	10	10	10	10			
Muscle is soft and flabby and may be atrophied									
Muscle is tense and hard									
PASSIVE MANIPULATION									
Limbs are easily manipulated and flaccid									
Limbs are easily manipulated but resistance is encountered on moving	9	10	10	8	10	9			
Limbs are manipulated with strong resistance	1			2		1			
Limbs are manipulated with strong resistance, but relax in a cogwheel fashion									
PUPILLARY SIZE									
Normal	10	10	10	10	10	10			
Mydriasis									
Miosis									
EYE POSITION									
Normal	10	10	10	10	10	10			
Deviated dorsally									
Deviated ventrally									
Deviated medially									
Deviated laterally									
NYSTAGMUS - RESTING									
None	10	10	10	10	10	10			
Nystagmus to the left									
Nystagmus to the right									
NYSTAGMUS - POSITIONAL									
Eyes return to center quickly	10	10	10	10	10	10			
Nystagmus on movement to left									
Nystagmus on movement to right									

FUNCTIONAL OBSERVATIONAL BATTERY - SUMMARY DATA

Number of Animals Showing Each Response

SPECIES: RAT
SEX: FEMALE
NO. RATS 10

TABLE NO.: 6

STUDY NO.: 88001712
HAEL NO: 88-0017
ACC. NO.: 907124
DOSE LEVEL: 100 PPM
PAGE 6 OF 7

EXAMINATION TIME	Pre Exp	4 Day	10 Day	32 Day	60 Day	95 Day			COMMENTS/SUMMARY
NEUROLOGICAL EXAMINATION									
VISUAL ORIENTATION									
Rat orients toward object as soon as object enters visual field		2	2						
Rat orients to object but only after object is well into visual field	6	6	3	3	1	2			
Does not orient toward object	4	2	5	7	9	8			
Orients toward object and responds aggressively									
PALPERBRAL REFLEX									
Eyelids blink	10	10	10	10	10	10			
Eyelids do not blink									
PINNA TOUCH RESPONSE									
No response	1	1	2	5	4	7			
One twitch	5	5	7	4	6	2			
More than one twitch	4	4	1	1		1			
Whole body withdraws									
EXTENSOR POSTURAL THRUST									
On contact, rat extends hind-limbs to bear weight	10	10	10	10	10	10			
On contact hindlimbs are extended but stumbling or collapse occurs									
On contact limbs are not extended									
HOPPING REFLEX									
Rat hops without falling	10	10	10	10	10	10			
Rat hops but occasionally falls									
Rat does not hop									
Rat hops with difficulty									
VISUAL PLACING									
Early vigorous extension	10	10	10	10	10	10			
Before vibrissae contact									
After slight vibrissae contact									
After marked vibrissae contact									
After nose contact									
Bizarre behav. hampers placing									
None even after nose contact									
GRIP STRENGTH - SEMI-QUANT.									
Active grip, effective	10	10	10	9	10	10			
Unusually strong									
Moderate grip, effective				1					
Slight grip, not effective									
None									
GRIP STRENGTH - QUANT. (g)									
(FORELIMB) X	448	688	644	696	668	1086			
SD	97	34	59	35	25	168			
(HINDLIMB) X	387	472	716	747	688	772			
SD	130	169	133	199	137	160			
BIZARRE BEHAVIOR									
None	10	10	10	10	10	10			
Head flick									
Head search									
Hallucinatory									
Compulsive biting									
Self-destructive biting									
Compulsive licking									
Prancing									
Upright walking									
Aimless wandering									
Circling									
Waltzing									
Retropulsion									
Spatial disorientation									
Side-to-side rocking									

FUNCTIONAL OBSERVATIONAL BATTERY - SUMMARY DATA

Number of Animals Showing Each Response

TABLE NO.: 6

STUDY NO.: 880017I2
HAEL NO: 88-0017
ACC. NO.: 907124
DOSE LEVEL: 100 PPM
PAGE 7 OF 7

SPECIES: RAT
SEX: FEMALE
NO. RATS 10

EXAMINATION TIME		Pre Exp	4 Day	10 Day	32 Day	60 Day	95 Day			COMMENTS/SUMMARY
NEUROLOGICAL EXAMINATION										
DEFECATION	X	1.4	1.9	0.8	0.3	0.1	0.4			
	SD	1.6	3.0	1.5	0.7	0.3	0.7			
URINATION	X	0.5	0.4	0.6	0.2	0.1	0.7			
	SD	0.5	0.7	0.8	0.4	0.3	0.7			
SPONTANEOUS VOCALIZATIONS	X	16.2	10.4	9.1	7.0	8.1	7.0			
	SD	10.3	5.9	5.2	4.6	7.7	5.5			

ADDITIONAL COMMENTS:

3555T

FUNCTIONAL OBSERVATIONAL BATTERY - SUMMARY DATA

Number of Animals Showing Each Response

SPECIES: RAT
SEX: FEMALE
NO. RATS 10

TABLE NO.: 7

STUDY NO.: 880017I2
HAEL NO: 88-0017
ACC. NO.: 907124
DOSE LEVEL: 200 PPM
PAGE 1 OF 7

EXAMINATION TIME	Pre Exp	4 Day	10 Day	32 Day	60 Day	95 Day			COMMENTS/SUMMARY
ACTIVITY STATUS									
HOME CAGE ACTIVITY									
Flattened, w/wo limbs extended									
Lying on side									
Curled up resting or asleep	2	4	3		2	2			
Sitting, head held low									
Sitting Normally	3	2	3	4	5	5			
Alert, oriented toward investigator	5	4	4	6	3	3			
Rearing									
Vertical jumping									
Circling purposelessly									
Pacing purposelessly									
Writhing, lying down, wave-like movement of abdomen, alternating limb movements									
Animal in feeder									
FECES AMOUNT									
Normal	10	10	10	10	10	10			
Increased									
Decreased									
FECES COLOR									
Normal	10	10	10	10	10	10			
Pale									
Dark									
FECES CONSISTENCY									
Pellets	10	10	10	10	10	10			
Partially formed									
Unformed, diarrhea									
URINE AMOUNT									
Normal									
Increased									
Decreased									
URINE COLOR									
Normal	10	10	10	10	10	10			
Pale									
Dark yellow									
Possibly blood stained									
Colored by compound									
BEHAVIOR FROM CAGE									
Animal sits quietly and is easily removed	8	8	9	10	9	9			
Vocalization without resisting being picked up	1	2	1			1			
Animal rears often oriented towards investigator's hand									
Runs around cage, hard to grab, may or may not vocalize	1				1				
Freezes w/wo vocalization									
Aggressive, tail and throat rattle w/wo vocalization, may attack									
PHYSICAL EXAMINATION									
DEATH									
None	10	10	10	10	10	10			
Immediately following dosing									
Delayed following dosing									
HAIR COAT									
Clean and groomed	10	10	10	10	10	10			Alopecia D:32 (1 rat), D:60 & 95 (2 rats)
Unkempt									
Stained by feces									
Stained by urine									
Stained by chemical									
Piloerection									
MUCUS MEMBRANES/EYE/SKIN COLOR									
Pink	10	10	10	10	10	10			
Pale									
Darkened, cyanotic									
Darkened, brown									
Bright, deep red flush									

FUNCTIONAL OBSERVATIONAL BATTERY - SUMMARY DATA

Number of Animals Showing Each Response

TABLE NO.: 7

SPECIES: RAT
SEX: FEMALE
NO. RATS 10

STUDY NO.: 88001712
HAEL NO: 88-0017
ACC. NO.: 907124
DOSE LEVEL: 200 PPM
PAGE 2 OF 7

EXAMINATION TIME	Pre Exp	4 Day	10 Day	32 Day	60 Day	95 Day			COMMENTS/SUMMARY
PHYSICAL EXAMINATION									
BODY TEMPERATURE									
Normal to touch	10	10	10	10	10	10			
Hypothermia									
Hyperthermia									
RESPIRATORY RATE									
Normal by observation	10	10	10	10	10	10			
Decreased < 80/min									
Increased > 110/min									
RESPIRATORY CHARACTER									
Normal	10	10	10	10	10	10			
Rales									
Retching									
Dyspneic									
Gasping									
LACRIMATION									
None	10	10	10	10	10	10			
Present									
Chromodacryorrhea									
SALIVATION AMOUNT									
None	10	10	10	10	10	10			
Very slight wet margin sub-maxillary area									
Wet zone 1/4 sub-max area									
Wet zone 1/2 sub-max area									
Wet zone entire sub-max area									
SALIVATION ONSET									
Immediately after dosing									
Stimulated by handling									
Premonitory to convulsion									
EYE PROMINENCE									
Normal	10	10	10	10	10	10			
Exophthalmos									
Enophthalmos									
PALPEBRAL CLOSURE									
Eyelids wide open	10	10	10	10	10	10			
Eyelids slightly drooping									
Eyelids drooping halfway									
Eyelids unopened									
CONVULSION ONSET									
None	10	10	10	10	10	10			
Spontaneous									
Induced by handling, light, sound, or other stimuli (state stimulus)									
TYPE OF CONVULSION									
Chewing only									
Jacksonian, begins with chewing									
Jacksonian, state initial state									
Mild clonic tremors of limbs									
Clonic tremors of entire body									
Tonic convulsion									
Tonic-clonic convulsion									
Opisthotonus									
Emprosthotonus									
Spasmodic jumping									
Agonal or asphyxial convulsion									
Status epilepticus									
LENGTH OF SEIZURE									
LENGTH OF POST-ICTAL PERIOD									
BITING									
None	10	10	10	10	10	10			
Biting of cage									
Self-destructive biting									

FUNCTIONAL OBSERVATIONAL BATTERY - SUMMARY DATA

Number of Animals Showing Each Response

TABLE NO.: 7

SPECIES: RAT
SEX: FEMALE
NO. RATS 10

STUDY NO.: 88001712
HAEL NO: 88-0017
ACC. NO.: 907124
DOSE LEVEL: 200 PPM
PAGE 3 OF 7

EXAMINATION TIME	Pre Exp	4 Day	10 Day	32 Day	60 Day	95 Day			COMMENTS/SUMMARY
PHYSICAL EXAMINATION									
TREMOR SEVERITY									
None	10	9	10	10	7	9			
Body tremor in response to stimulation		1							
Head tremors only					3	1			
Body tremor slight, does not impair locomotion									
Body tremor moderate, impairs locomotion sightly									
Body tremor severe, prevents locomotion									
TREMOR ONSET									
Resting tremor - occurs at rest		1			3	1			
Intentional tremor - occurs or increases severity only when the animal orients to an object or attempts to move									
HANDLING BEHAVIOR									
Normally alert	6	6	7	9	8	9			
Animal is limp									
Vocalizes but does not resist	4	4	3	1	1				
Freezes rigidly in hand									
Attempts to escape, may vocalize or bite					1	1			
NEUROLOGICAL EXAMINATION									
LOCOMOTOR ACTIVITY									
Resting									
Reduced activity		1	1	1	1				
Casual scratch, groom/slow spatial orientation	7	5	8	8	8	9			
Vigorous scratching, grooming/ mod. spatial orientation	3	4	1	1	1	1			
Vigorous movement; slt. sharp rapid/dart									
Extensive vigorous movement; ext. sharp, rapid/dart									
REARING ACTIVITY									
Does not rear	10	8	10	10	10	10			
Rears on hindlimbs with use of tail		2							
Rears on hindlimbs without use of tail									
Falls to side while rearing									
Falls backward while rearing									
TAIL ELEVATION									
Lifted while walking	10	10	10	10	10	10			
Occ. lifted while walking									
Drags end of tail									
Drags entire tail									
Tail held vertically									
Tail held diagonally (45°)									
STATIC LIMB POSITION									
Limbs held normally	10	10	10	10	10	10			
Crossing over medially									
Deviated medially									
Deviated laterally									
ABNORMAL GAIT									
None	10	10	10	10	10	10			
Steppage									
Spastic									
Waddling									
Dysmetric									
Hypermetria									
Duck-walk									
Scissor									
Knuckling-over									
Crossing-over									

FUNCTIONAL OBSERVATIONAL BATTERY - SUMMARY DATA

Number of Animals Showing Each Response

TABLE NO.: 7

STUDY NO.: 880017I2
HAEL NO: 88-0017
ACC. NO.: 907124
DOSE LEVEL: 200 PPM
PAGE 4 OF 7

SPECIES: RAT
SEX: FEMALE
NO. RATS 10

EXAMINATION TIME	Pre Exp	4 Day	10 Day	32 Day	60 Day	95 Day			COMMENTS/SUMMARY
NEUROLOGICAL EXAMINATION									
HYPOTONIC GAIT - HINDLIMB									
None	10	10	10	10	10	10			
Incomplete extension of tarsus, no impairment of gait									
Incomplete extension of tarsus, stifle, and hip; impaired gait, pelvis tipped									
HYPOTONIC GAIT - FORELIMB									
None	10	10	10	10	10	10			
Incomplete extension of carpus									
Thorax held close to ground									
Thorax can not be lifted off ground									
ATAXIC GAIT									
None	10	10	10	10	10	10			
Slight but definite									
Considerable without falling									
Considerable w/ frequent falls									
Can't walk w/o falling									
HEAD POSITION									
Head held without tilt	10	10	10	10	10	10			
Head held left									
Head held right									
APPROACH RESPONSE									
No reaction	2	4		6	6	3			
Rat slowly approaches and sniffs at object	1	5	10	4	4	6			
Rat freezes	2								
Rat pulls away slightly	3					1			
Jumps or turns away to avoid object	2	1							
Jumps at object, attacks or bites									
TOUCH RESPONSE									
No reaction	3	4		1	1	2			
Rat turns toward site slowly	2	3	6	3	3	4			
Rat walks forward, away from stimulus	4	3	4	5	5	2			
Rat freezes					1				
Rat jerks around toward object									
Turns to opposite side of touch	1			1		2			
Aggressive or violent reaction w/ or w/o vocalization									
AUDITORY ORIENTATION									
Orients to sound	4	7	4	2	2	4			
Does not orient to sound	6	3	6	8	8	6			
OLFACTORY ORIENTATION									
Orients to swab	8	7	4	3	3	3			
Does not orient to swab	2	3	6	7	7	7			
RIGHTING RESPONSE									
Rights when turned to either side	10	10	10	10	10	10			
Attempts to right but cannot									
Does not right when turned to either side									
Does not right from left side									
Does not right from right side									
PROPRIOCEPTIVE POSITIONING									
Leaves limb in flexed position									
Extends limb sluggishly									
Extends limb briskly	10	10	10	10	10	10			

FUNCTIONAL OBSERVATIONAL BATTERY - SUMMARY DATA

Number of Animals Showing Each Response

TABLE NO.: 7

STUDY NO.: 880017I2
HAEL NO: 88-0017
ACC. NO.: 907124
DOSE LEVEL: 200 PPM
PAGE 5 OF 7

SPECIES: RAT
SEX: FEMALE
NO. RATS 10

EXAMINATION TIME	Pre Exp	4 Day	10 Day	32 Day	60 Day	95 Day			COMMENTS/SUMMARY
NEUROLOGICAL EXAMINATION									
TAIL PINCH									
No response		3	3	1	1	2			Animal jerks tail away
Rat sluggish turns to look		3	3	3	2				D:4 (1 rat)
Rat walks forward away from stimulus	9	2	4	6	7	6			
Rat freezes, w/wo vocalization									
Rat immediately turns, may bite at side	1	1				1			
Rat jumps forward, w/o vocal.									
Exaggerated response, vocal., rapid turning						1			
ABDOMINAL TONE									
Completely flaccid; cavity does not return to normal									
Slightly flaccid; rapid return to normal			1			1			
Slight resistance	7	10	9	10	10	9			
Moderate resistance	3								
Extreme resistance; board-like									
Pain, struggling, or vocalization on palpation									
BLADDER TONE									
Bladder not enlarged	10	10	10	10	10	10			
Bladder enlarged and flaccid									
Bladder enlarged but not flaccid									
MUSCLE TONE									
Muscle is firm but not hard	10	10	10	10	10	10			
Muscle is soft and flabby and may be atrophied									
Muscle is tense and hard									
PASSIVE MANIPULATION									
Limbs are easily manipulated and flaccid									
Limbs are easily manipulated but resistance is encountered on moving	10	10	10	10	10	8			
Limbs are manipulated with strong resistance						2			
Limbs are manipulated with strong resistance, but relax in a cogwheel fashion									
PUPILLARY SIZE									
Normal	10	10	10	10	10	10			
Mydriasis									
Miosis									
EYE POSITION									
Normal	10	10	10	10	10	10			
Deviated dorsally									
Deviated ventrally									
Deviated medially									
Deviated laterally									
NYSTAGMUS - RESTING									
None	10	10	10	10	10	10			
Nystagmus to the left									
Nystagmus to the right									
NYSTAGMUS - POSITIONAL									
Eyes return to center quickly	10	10	10	10	10	10			
Nystagmus on movement to left									
Nystagmus on movement to right									

FUNCTIONAL OBSERVATIONAL BATTERY - SUMMARY DATA

Number of Animals Showing Each Response

TABLE NO.: 7

STUDY NO.: 880017I2
HAEL NO: 88-0017
ACC. NO.: 907124
DOSE LEVEL: 200 PPM
PAGE 6 OF 7

SPECIES: RAT
SEX: FEMALE
NO. RATS 10

EXAMINATION TIME	Pre Exp	4 Day	10 Day	32 Day	60 Day	95 Day			COMMENTS/SUMMARY
NEUROLOGICAL EXAMINATION									
VISUAL ORIENTATION									
Rat orients toward object as soon as object enters visual field		1	2						
Rat orients to object but only after object is well into visual field	3	5	5	1		2			
Does not orient toward object	7	4	3	9	10	8			
Orients toward object and responds aggressively									
PALPERBRAL REFLEX									
Eyelids blink	10	10	10	10	10	10			
Eyelids do not blink									
PINNA TOUCH RESPONSE									
No response		4	4	7	9	9			
One twitch	8	3	3	2	1	1			
More than one twitch	1	3	3	1					
Whole body withdraws	1								
EXTENSOR POSTURAL THRUST									
On contact, rat extends hind-limbs to bear weight	10	10	10	10	10	10			
On contact hindlimbs are extended but stumbling or collapse occurs									
On contact limbs are not extended									
HOPPING REFLEX									
Rat hops without falling	10	10	10	10	10	10			
Rat hops but occasionally falls									
Rat does not hop									
Rat hops with difficulty									
VISUAL PLACING									
Early vigorous extension	10	10	10	10	10	10			
Before vibrissae contact									
After slight vibrissae contact									
After marked vibrissae contact									
After nose contact									
Bizarre behav. hampers placing									
None even after nose contact									
GRIP STRENGTH - SEMI-QUANT.									
Active grip, effective	10	10	10	10	10	10			
Unusually strong									
Moderate grip, effective									
Slight grip, not effective									
None									
GRIP STRENGTH - QUANT. (g)									
(FORELIMB) X	482	674	647	697	676	1030			
SD	132	91	47	85	35	281			
(HINDLIMB) X	374	492	688	622	681	898			
SD	116	179	170	168	175	209			
BIZARRE BEHAVIOR									
None	10	10	10	10	9	10			
Head flick					1				
Head search									
Hallucinatory									
Compulsive biting									
Self-destructive biting									
Compulsive licking									
Prancing									
Upright walking									
Aimless wandering									
Circling									
Waltzing									
Retropulsion									
Spatial disorientation									
Side-to-side rocking									

FUNCTIONAL OBSERVATIONAL BATTERY - SUMMARY DATA

Number of Animals Showing Each Response

TABLE NO.: 7

SPECIES: RAT
SEX: FEMALE
NO. RATS 10

STUDY NO.: 88001712
HAEL NO: 88-0017
ACC. NO.: 907124
DOSE LEVEL: 200 PPM
PAGE 7 OF 7

EXAMINATION TIME		Pre Exp	4 Day	10 Day	32 Day	60 Day	95 Day			COMMENTS/SUMMARY
NEUROLOGICAL EXAMINATION										
DEFECATION	X	3.1	2.7	0.9	1.1	0.4	0.9			
	SD	1.4	2.5	1.3	1.7	1.3	1.5			
URINATION	X	0.5	0.6	0.4	0.4	0.5	0.8			
	SD	0.7	0.7	0.5	0.7	0.7	0.9			
SPONTANEOUS VOCALIZATIONS	X	14.6	11.5	9.3	6.8	7.2	8.9			
	SD	8.0	7.1	5.8	4.3	7.0	8.5			

ADDITIONAL COMMENTS: D:60 Animal scratches at right ear (1 rat)

3556T

FUNCTIONAL OBSERVATIONAL BATTERY - SUMMARY DATA

Number of Animals Showing Each Response

TABLE NO.: 8

STUDY NO.: 880017I2
HAEL NO: 88-0017
ACC. NO.: 907124
DOSE LEVEL: 400 PPM
PAGE 1 OF 7

SPECIES: RAT
SEX: FEMALE
NO. RATS 10

EXAMINATION TIME	Pre Exp	4 Day	10 Day	32 Day	60 Day	95 Day			COMMENTS/SUMMARY
ACTIVITY STATUS									
HOME CAGE ACTIVITY									
Flattened, w/wo limbs extended									
Lying on side									
Curled up resting or asleep	2	3	2		1	2			
Sitting, head held low									
Sitting Normally	1	1	3	5	4	4			
Alert, oriented toward investigator	7	6	5	5	5	4			
Rearing									
Vertical jumping									
Circling purposelessly									
Pacing purposelessly									
Writhing, lying down, wave-like movement of abdomen, alternating limb movements									
Animal in feeder									
FECES AMOUNT									
Normal	10	10	10	10	10	10			
Increased									
Decreased									
FECES COLOR									
Normal	10	10	10	10	10	10			
Pale									
Dark									
FECES CONSISTENCY									
Pellets	10	10	10	10	10	10			
Partially formed									
Unformed, diarrhea									
URINE AMOUNT									
Normal									
Increased									
Decreased									
URINE COLOR									
Normal	10	10	10	10	10	10			
Pale									
Dark yellow									
Possibly blood stained									
Colored by compound									
BEHAVIOR FROM CAGE									
Animal sits quietly and is easily removed	9	10	9	9	8	9			
Vocalization without resisting being picked up			1	1	2	1			
Animal rears often oriented towards investigator's hand									
Runs around cage, hard to grab, may or may not vocalize	1								
Freezes w/wo vocalization									
Aggressive, tail and throat rattle w/wo vocalization, may attack									
PHYSICAL EXAMINATION									
DEATH									
None	10	10	10	10	10	10			
Immediately following dosing									
Delayed following dosing									
HAIR COAT									
Clean and groomed	10	10	10	10	10	10			Alopecia D:60 & 95 (1 rat)
Unkempt									
Stained by feces									
Stained by urine									
Stained by chemical									
Piloerection									
MUCUS MEMBRANES/EYE/SKIN COLOR									
Pink	10	10	10	10	10	10			
Pale									
Darkened, cyanotic									
Darkened, brown									
Bright, deep red flush									

FUNCTIONAL OBSERVATIONAL BATTERY - SUMMARY DATA

Number of Animals Showing Each Response

TABLE NO.: 8

SPECIES: RAT
SEX: FEMALE
NO. RATS 10

STUDY NO.: 88001712
HAEL NO: 88-0017
ACC. NO.: 907124
DOSE LEVEL: 400 PPM
PAGE 2 OF 7

EXAMINATION TIME	Pre Exp	4 Day	10 Day	32 Day	60 Day	95 Day			COMMENTS/SUMMARY
PHYSICAL EXAMINATION									
BODY TEMPERATURE									
Normal to touch	10	10	10	10	10	10			
Hypothermia									
Hyperthermia									
RESPIRATORY RATE									
Normal by observation	10	10	10	10	10	10			
Decreased < 80/min									
Increased > 110/min									
RESPIRATORY CHARACTER									
Normal	10	10	10	10	10	10			
Rales									
Retching									
Dyspneic									
Gasping									
LACRIMATION									
None	10	10	10	10	10	10			
Present									
Chromodacryorrhea									
SALIVATION AMOUNT									
None	10	10	10	10	10	10			
Very slight wet margin sub-maxillary area									
Wet zone 1/4 sub-max area									
Wet zone 1/2 sub-max area									
Wet zone entire sub-max area									
SALIVATION ONSET									
Immediately after dosing									
Stimulated by handling									
Premonitory to convulsion									
EYE PROMINENCE									
Normal	10	10	10	10	10	10			
Exophthalmos									
Enophthalmos									
PALPEBRAL CLOSURE									
Eyelids wide open	10	10	10	10	10	10			
Eyelids slightly drooping									
Eyelids drooping halfway									
Eyelids unopened									
CONVULSION ONSET									
None	10	10	10	10	10	10			
Spontaneous									
Induced by handling, light, sound, or other stimuli (state stimulus)									
TYPE OF CONVULSION									
Chewing only									
Jacksonian, begins with chewing									
Jacksonian, state initial state									
Mild clonic tremors of limbs									
Clonic tremors of entire body									
Tonic convulsion									
Tonic-clonic convulsion									
Opisthotonus									
Emprosthotonus									
Spasmodic jumping									
Agonal or asphyxial convulsion									
Status epilepticus									
LENGTH OF SEIZURE									
LENGTH OF POST-ICTAL PERIOD									
BITING									
None	10	10	10	10	10	10			
Biting of cage									
Self-destructive biting									

FUNCTIONAL OBSERVATIONAL BATTERY - SUMMARY DATA

Number of Animals Showing Each Response

TABLE NO.: 8

STUDY NO.: 88001712
HAEL NO: 88-0017
ACC. NO.: 907124
DOSE LEVEL: 400 PPM
PAGE 3 OF 7

SPECIES: RAT
SEX: FEMALE
NO. RATS 10

EXAMINATION TIME	Pre Exp	4 Day	10 Day	32 Day	60 Day	95 Day			COMMENTS/SUMMARY
PHYSICAL EXAMINATION									
TREMOR SEVERITY									
None	10	10	8	8	9	10			
Body tremor in response to stimulation				2					
Head tremors only			2		1				
Body tremor slight, does not impair locomotion									
Body tremor moderate, impairs locomotion sightly									
Body tremor severe, prevents locomotion									
TREMOR ONSET									
Resting tremor - occurs at rest			2	2	1				
Intentional tremor - occurs or increases severity only when the animal orients to an object or attempts to move									
HANDLING BEHAVIOR									
Normally alert	5	6	7	8	7	6			
Animal is limp									
Vocalizes but does not resist	5	4	3	1	2	1			
Freezes rigidly in hand				1					
Attempts to escape, may vocalize or bite					1	3			
NEUROLOGICAL EXAMINATION									
LOCOMOTOR ACTIVITY									
Resting									
Reduced activity			2		1	3			
Casual scratch, groom/slow spatial orientation	5	7	6	9	7	6			
Vigorous scratching, grooming/ mod. spatial orientation	5	3	2	1	2	1			
Vigorous movement; slt. sharp rapid/dart									
Extensive vigorous movement; ext. sharp, rapid/dart									
REARING ACTIVITY									
Does not rear	10	10	10	10	10	10			
Rears on hindlimbs with use of tail									
Rears on hindlimbs without use of tail									
Falls to side while rearing									
Falls backward while rearing									
TAIL ELEVATION									
Lifted while walking	10	9	10	10	10	10			
Occ. lifted while walking									
Drags end of tail		1							
Drags entire tail									
Tail held vertically									
Tail held diagonally (45°)									
STATIC LIMB POSITION									
Limbs held normally	10	10	10	10	10	10			
Crossing over medially									
Deviated medially									
Deviated laterally									
ABNORMAL GAIT									
None	10	10	10	10	10	10			
Steppage									
Spastic									
Waddling									
Dysmetric									
Hypermetria									
Duck-walk									
Scissor									
Knuckling-over									
Crossing-over									

FUNCTIONAL OBSERVATIONAL BATTERY - SUMMARY DATA

Number of Animals Showing Each Response

TABLE NO.: 8

SPECIES: RAT
SEX: FEMALE
NO. RATS 10

STUDY NO.: 880017I2
HAEL NO: 88-0017
ACC. NO.: 907124
DOSE LEVEL: 400 PPM
PAGE 4 OF 7

EXAMINATION TIME	Pre Exp	4 Day	10 Day	32 Day	60 Day	95 Day			COMMENTS/SUMMARY
NEUROLOGICAL EXAMINATION									
HYPOTONIC GAIT - HINDLIMB									
None	10	10	10	10	10	10			
Incomplete extension of tarsus, no impairment of gait									
Incomplete extension of tarsus, stifle, and hip; impaired gait, pelvis tipped									
HYPOTONIC GAIT - FORELIMB									
None	10	10	10	10	10	10			
Incomplete extension of carpus									
Thorax held close to ground									
Thorax can not be lifted off ground									
ATAXIC GAIT									
None	10	10	10	10	10	10			
Slight but definite									
Considerable without falling									
Considerable w/ frequent falls									
Can't walk w/o falling									
HEAD POSITION									
Head held without tilt	10	10	10	10	10	10			
Head held left									
Head held right									
APPROACH RESPONSE									
No reaction	3	2	5	4	4	5			
Rat slowly approaches and sniffs at object	6	6	5	5	6	5			
Rat freezes		1							
Rat pulls away slightly				1					
Jumps or turns away to avoid object	1	1							
Jumps at object, attacks or bites									
TOUCH RESPONSE									
No reaction			3	3		7			
Rat turns toward site slowly		2	3	3	5				
Rat walks forward, away from stimulus	8	8	4	4	5	2			
Rat freezes	1								
Rat jerks around toward object									
Turns to opposite side of touch	1					1			
Aggressive or violent reaction w/ or w/o vocalization									
AUDITORY ORIENTATION									
Orients to sound	5	4	5	3	2	6			
Does not orient to sound	5	6	5	7	8	4			
OLFACTORY ORIENTATION									
Orients to swab	10	5	5	5	4	3			
Does not orient to swab		5	5	5	6	7			
RIGHTING RESPONSE									
Rights when turned to either side	10	10	10	10	10	10			
Attempts to right but cannot									
Does not right when turned to either side									
Does not right from left side									
Does not right from right side									
PROPRIOCEPTIVE POSITIONING									
Leaves limb in flexed position									
Extends limb sluggishly									
Extends limb briskly	10	10	10	10	10	10			

FUNCTIONAL OBSERVATIONAL BATTERY - SUMMARY DATA

Number of Animals Showing Each Response

TABLE NO.: 8

STUDY NO.: 88001712
HAEL NO: 88-0017
ACC. NO.: 907124
DOSE LEVEL: 400 PPM
PAGE 5 OF 7

SPECIES: RAT
SEX: FEMALE
NO. RATS 10

EXAMINATION TIME	Pre Exp	4 Day	10 Day	32 Day	60 Day	95 Day			COMMENTS/SUMMARY
NEUROLOGICAL EXAMINATION									
TAIL PINCH									
No response		2	1	2		3			Animal jerks tail away
Rat sluggish turns to look			3	3	3	2			D:4 (1 rat)
Rat walks forward away from stimulus	10	7	5	4	6	5			
Rat freezes, w/wo vocalization									
Rat immediately turns, may bite at side			1						
Rat jumps forward, w/o vocal.				1					
Exaggerated response, vocal., rapid turning					1				
ABDOMINAL TONE									
Completely flaccid; cavity does not return to normal									
Slightly flaccid; rapid return to normal		1				1			
Slight resistance	7	8	10	10	10	9			
Moderate resistance	3	1							
Extreme resistance; board-like									
Pain, struggling, or vocalization on palpation									
BLADDER TONE									
Bladder not enlarged	10	10	10	10	10	10			
Bladder enlarged and flaccid									
Bladder enlarged but not flaccid									
MUSCLE TONE									
Muscle is firm but not hard	10	10	10	10	10	10			
Muscle is soft and flabby and may be atrophied									
Muscle is tense and hard									
PASSIVE MANIPULATION									
Limbs are easily manipulated and flaccid									
Limbs are easily manipulated but resistance is encountered on moving	10	10	7	10	9	8			
Limbs are manipulated with strong resistance			3		1	2			
Limbs are manipulated with strong resistance, but relax in a cogwheel fashion									
PUPILLARY SIZE									
Normal	10	10	10	10	10	10			
Mydriasis									
Miosis									
EYE POSITION									
Normal	10	10	10	10	10	10			
Deviated dorsally									
Deviated ventrally									
Deviated medially									
Deviated laterally									
NYSTAGMUS - RESTING									
None	10	10	10	10	10	10			
Nystagmus to the left									
Nystagmus to the right									
NYSTAGMUS - POSITIONAL									
Eyes return to center quickly	10	10	10	10	10	10			
Nystagmus on movement to left									
Nystagmus on movement to right									

FUNCTIONAL OBSERVATIONAL BATTERY - SUMMARY DATA

Number of Animals Showing Each Response

TABLE NO.: 8

STUDY NO.: 88001712
HAEL NO: 88-0017
ACC. NO.: 907124
DOSE LEVEL: 400 PPM
PAGE 6 OF 7

SPECIES: RAT
SEX: FEMALE
NO. RATS 10

EXAMINATION TIME	Pre Exp	4 Day	10 Day	32 Day	60 Day	95 Day			COMMENTS/SUMMARY
NEUROLOGICAL EXAMINATION									
VISUAL ORIENTATION									
Rat orients toward object as soon as object enters visual field	1	1	1	1					
Rat orients to object but only after object is well into visual field	2	4	3	1	2	1			
Does not orient toward object	7	5	6	8	8	9			
Orients toward object and responds aggressively									
PALPERBRAL REFLEX									
Eyelids blink	10	10	10	10	10	10			
Eyelids do not blink									
PINNA TOUCH RESPONSE									
No response	2	4	5	7	8	7			
One twitch	8	3	3	3	2	1			
More than one twitch		3	2			2			
Whole body withdraws									
EXTENSOR POSTURAL THRUST									
On contact, rat extends hind-limbs to bear weight	10	10	10	10	10	10			
On contact hindlimbs are extended but stumbling or collapse occurs									
On contact limbs are not extended									
HOPPING REFLEX									
Rat hops without falling	10	10	10	10	10	10			
Rat hops but occasionally falls									
Rat does not hop									
Rat hops with difficulty									
VISUAL PLACING									
Early vigorous extension	10	10	10	10	10	10			
Before vibrissae contact									
After slight vibrissae contact									
After marked vibrissae contact									
After nose contact									
Bizarre behav. hampers placing									
None even after nose contact									
GRIP STRENGTH - SEMI-QUANT.									
Active grip, effective	10	9	10	10	10	10			
Unusually strong									
Moderate grip, effective		1							
Slight grip, not effective									
None									
GRIP STRENGTH - QUANT. (g)									
(FORELIMB) X	539	675	678	701	669	1174			
SD	70	99	34	32	56	257			
(HINDLIMB) X	469	602	700	780	784	940			
SD	110	190	152	197	184	256			
BIZARRE BEHAVIOR									
None	10	9	10	10	10	10			
Head flick		1							
Head search									
Hallucinatory									
Compulsive biting									
Self-destructive biting									
Compulsive licking									
Prancing									
Upright walking									
Aimless wandering									
Circling									
Waltzing									
Retropulsion									
Spatial disorientation									
Side-to-side rocking									

FUNCTIONAL OBSERVATIONAL BATTERY - SUMMARY DATA

Number of Animals Showing Each Response

TABLE NO.: 8

STUDY NO.: 88001712
HAEL NO: 88-0017
ACC. NO.: 907124
DOSE LEVEL: 400 PPM
PAGE 7 OF 7

SPECIES: RAT
SEX: FEMALE
NO. RATS 10

EXAMINATION TIME		Pre Exp	4 Day	10 Day	32 Day	60 Day	95 Day			COMMENTS/SUMMARY
NEUROLOGICAL EXAMINATION										
DEFECATION	X	2.3	2.0	1.1	0.5	0.5	0.4			
	SD	2.1	2.4	2.3	1.6	1.1	1.0			
URINATION	X	0.5	0.6	0.6	0.3	0.5	0.5			
	SD	0.7	0.7	0.8	0.5	0.7	0.5			
SPONTANEOUS VOCALIZATIONS	X	16.5	11.2	8.9	6.4	9.8	12.6			
	SD	9.4	7.0	7.2	3.8	8.8	12.7			

ADDITIONAL COMMENTS:

3557T

FUNCTIONAL OBSERVATIONAL BATTERY - INDIVIDUAL DATA

DATE: 4-14-88
STUDY DAY: -4
SPECIES: RAT
SEX: MALE

RECORDER: KEN SHEPARD
OBSERVER: LISA BERNARD
TABLE NO.: 9

STUDY NO.: 88001711
ACC. NO.: 907124
DOSE LEVEL: 0 PPM
PAGE 1 OF 4

ANIMAL NUMBERS	1	2	3	4	5	6	7	8	9	10	COMMENTS/SUMMARY
CAGESIDE OBSERVATION											
HOME CAGE ACTIVITY	0	0	A	0	A	A	A	S	0	0	
FECES AMOUNT	0	0	0	0	0	0	0	0	0	0	
FECES COLOR	0	0	0	0	0	0	0	0	0	0	
FECES CONSISTENCY	0	0	0	0	0	0	0	0	0	0	
URINE AMOUNT	0	0	0	0	0	0	0	0	0	0	
URINE COLOR	0	0	0	0	0	0	0	0	0	0	
BEHAVIOR FROM CAGE	0	0	0	0	0	0	4	0	0	1	
PHYSICAL EXAMINATION											
DEATH	-	-	-	-	-	-	-	-	-	-	
HAIR COAT	0	0	0	0	0	0	0	0	0	0	
MUCOUS MEMB./EYE/SKIN COLOR	0	0	0	0	0	0	0	0	0	0	
BODY TEMPERATURE	0	0	0	0	0	0	0	0	0	0	
RESPIRATORY RATE	0	0	0	0	0	0	0	0	0	0	
RESPIRATORY CHARACTER	0	0	0	0	0	0	0	0	0	0	
LACRIMATION	0	0	0	0	0	0	0	0	0	0	
SALIVATION AMOUNT	0	0	0	0	0	0	0	0	0	0	
SALIVATION ONSET	-	-	-	-	-	-	-	-	-	-	
EYE PROMINENCE	0	0	0	0	0	0	0	0	0	0	
PALPEBRAL CLOSURE	0	0	0	0	0	0	0	0	0	0	
CONVULSION ONSET	-	-	-	-	-	-	-	-	-	-	
TYPE OF CONVULSION	-	-	-	-	-	-	-	-	-	-	
LENGTH OF SEIZURE	-	-	-	-	-	-	-	-	-	-	
LENGTH OF POST-ICTAL PERIOD	-	-	-	-	-	-	-	-	-	-	
BITING	-	-	-	-	-	-	-	-	-	-	
TREMOR SEVERITY	-	-	-	-	-	-	-	-	-	-	
TREMOR ONSET	-	-	-	-	-	-	-	-	-	-	
HANDLING BEHAVIOR	0	0	0	0	0	0	8	0	8	8	
NEUROLOGICAL EXAMINATION											
LOCOMOTOR ACTIVITY (N=2)	2	6	2	2	2	4	4	2	4	4	
REARING ACTIVITY	0	0	0	0	0	0	0	0	0	0	
TAIL ELEVATION	0	0	2	0	0	0	1	1	1	0	
STATIC LIMB POSITION	0	0	0	0	0	0	0	0	0	0	
ABNORMAL GAIT	-	-	-	-	-	-	-	-	-	-	
HYPOTONIC GAIT - HINDLIMB	0	0	0	0	0	0	0	0	0	0	
HYPOTONIC GAIT - FORELIMB	0	0	0	0	0	0	0	0	0	0	
ATAXIC GAIT	0	0	0	0	0	0	0	0	0	0	
HEAD POSITION	0	0	0	0	0	0	0	0	0	0	
APPROACH RESPONSE (N=1)	4	1	1	4	1	1	4	1	1	6	
TOUCH RESPONSE	T	R	T	T	0	R	R	C	R	R	
AUDITORY ORIENTATION	A	0	0	A	0	A	0	A	A	A	
OLFACTORY ORIENTATION	0	0	0	0	0	0	0	A	0	0	
RIGHTING REFLEX	0	0	0	0	0	0	0	0	0	0	
PROPRIOCEPTIVE POSITIONING	0	0	0	0	0	0	0	0	0	0	
TAIL PINCH (N=A)	R	R	A	T	R	R	R	R	R	R	
ABDOMINAL TONE (N=2)	2	4	2	2	2	2	2	2	2	2	
BLADDER TONE	0	0	0	0	0	0	0	0	0	0	
MUSCLE TONE	0	0	0	0	0	0	0	0	0	0	
PASSIVE MANIPULATION	0	0	0	0	0	R	0	0	0	0	
PUPILLARY SIZE	0	0	0	0	0	0	0	0	0	0	
EYE POSITION	0	0	0	0	0	0	0	0	0	0	
NYSTAGMUS - RESTING	0	0	0	0	0	0	0	0	0	0	
NYSTAGMUS - POSITIONAL	0	0	0	0	0	0	0	0	0	0	
VISUAL ORIENTATION	S	P	S	0	S	P	P	S	S	P	
PALPEBRAL REFLEX	0	0	0	0	0	0	0	0	0	0	
PINNA TOUCH RESPONSE (N=2)	4	4	2	0	2	0	4	4	0	2	
EXTENSOR POSTURAL THRUST	0	0	0	0	0	0	0	0	0	0	
HOPPING REFLEX	0	0	0	0	0	0	0	0	0	0	
VISUAL PLACING	0	0	0	0	0	0	0	0	0	0	
GRIP STRENGTH - SEMI-QUANT.	0	0	0	0	0	0	0	0	0	0	
GRIP STRENGTH-QUANT.											
(FORELIMB) 1	309	603	478	297	393	561	370	710	418	462	
2	172	502	332	341	407	481	280	652	600	503	
3	219	379	481	394	628	567	438	301	532	290	
(HINDLIMB) 1	372	290	556	269	208	138	371	390	550	259	
2	280	376	338	410	389	126	285	319	210	378	
3	210	380	232	362	232	194	332	251	200	215	
BIZARRE BEHAVIOR	-	-	-	-	-	-	-	-	-	-	
DEFECATION	6	1	3	4	4	4	6	3	4	5	
URINATION	2	1	1	1	1	2	0	2	1	2	
SPONTANEOUS VOCALIZATIONS	8	5	4	3	9	8	32	1	19	27	

ADDITIONAL COMMENTS:

FUNCTIONAL OBSERVATIONAL BATTERY - INDIVIDUAL DATA

DATE: 4-14-88
STUDY DAY: -4
SPECIES: RAT
SEX: MALE

RECORDER: KEN SHEPARD
OBSERVER: LISA BERNARD
TABLE NO.: 9

STUDY NO.: 88001711
ACC. NO.: 907124
DOSE LEVEL: 100 PPM
PAGE 2 OF 4

MAL NUMBERS	11	12	13	14	15	16	17	18	19	20	COMMENTS/SUMMARY
LAGESIDE OBSERVATION											
HOME CAGE ACTIVITY	A	S	A	S	S	S	0	A	0	0	
FECES AMOUNT	0	0	0	0	0	0	0	0	0	0	
FECES COLOR	0	0	0	0	0	0	0	0	0	0	Rat #11 (G5082) was not
FECES CONSISTENCY	0	0	0	0	0	0	0	0	0	0	using right forelimb. Rat
URINE AMOUNT	0	0	0	0	0	0	0	0	0	0	was replaced. New Rat #11
URINE COLOR	0	0	0	0	0	0	0	0	0	0	(G5076)
BEHAVIOR FROM CAGE	4	0	4	0	0	0	0	0	0	0	
PHYSICAL EXAMINATION											
DEATH	-	-	-	-	-	-	-	-	-	-	
HAIR COAT	0	0	0	0	0	0	0	0	0	0	
MUCOUS MEMB./EYE/SKIN COLOR	0	0	0	0	0	0	0	0	0	0	
BODY TEMPERATURE	0	0	0	0	0	0	0	0	0	0	
RESPIRATORY RATE	0	0	0	0	0	0	0	0	0	0	
RESPIRATORY CHARACTER	0	0	0	0	0	0	0	0	0	0	
LACRIMATION	0	0	0	0	0	0	0	0	0	0	
SALIVATION AMOUNT	0	0	0	0	0	0	0	0	0	0	
SALIVATION ONSET	-	-	-	-	-	-	-	-	-	-	
EYE PROMINENCE	0	0	0	0	0	0	0	0	0	0	
PALPEBRAL CLOSURE	0	0	0	0	0	0	0	0	0	0	
CONVULSION ONSET	-	-	-	-	-	-	-	-	-	-	
TYPE OF CONVULSION	-	-	-	-	-	-	-	-	-	-	
LENGTH OF SEIZURE	-	-	-	-	-	-	-	-	-	-	
LENGTH OF POST-ICTAL PERIOD	-	-	-	-	-	-	-	-	-	-	
BITING	-	-	-	-	-	-	-	-	-	-	
TREMOR SEVERITY	-	-	-	-	-	-	-	-	-	-	
TREMOR ONSET	-	-	-	-	-	-	-	-	-	-	
HANDLING BEHAVIOR	0	0	8	0	0	0	4	0	0	0	
NEUROLOGICAL EXAMINATION											
LOCOMOTOR ACTIVITY (N=2)	6	4	2	2	2	2	2	2	4	2	
REARING ACTIVITY	0	0	0	0	0	0	0	0	0	0	
TAIL ELEVATION	0	0	0	0	1	0	0	0	0	0	
STATIC LIMB POSITION	0	0	0	0	0	0	0	0	0	0	
ABNORMAL GAIT	-	-	-	-	-	-	-	-	-	-	
HYPOTONIC GAIT - HINDLIMB	0	0	0	0	0	0	0	0	0	0	
HYPOTONIC GAIT - FORELIMB	0	0	0	0	0	0	0	0	0	0	
ATAXIC GAIT	0	0	0	0	0	0	0	0	0	0	
HEAD POSITION	0	0	0	0	0	0	0	0	0	0	
APPROACH RESPONSE (N=1)	1	0	6	0	1	0	1	0	0	6	
TOUCH RESPONSE	T	0	R	0	T	R	R	R	C	R	
AUDITORY ORIENTATION	A	0	A	A	0	A	A	A	A	0	
OLFACTORY ORIENTATION	0	0	0	0	0	0	0	0	0	0	
RIGHTING REFLEX	0	0	0	0	0	0	0	0	0	0	
PROPRIOCEPTIVE POSITIONING	0	0	0	0	0	0	0	0	0	0	
TAIL PINCH (N=A)	R	A	A	R	T	A	R	R	R	R	
ABDOMINAL TONE (N=2)	2	2	4	2	2	2	2	2	2	2	
BLADDER TONE	0	0	0	0	0	0	0	0	0	0	
MUSCLE TONE	0	0	0	0	0	0	0	0	0	0	
PASSIVE MANIPULATION	0	0	0	0	0	0	0	0	0	0	
PUPILLARY SIZE	0	0	0	0	0	0	0	0	0	0	
EYE POSITION	0	0	0	0	0	0	0	0	0	0	
NYSTAGMUS - RESTING	0	0	0	0	0	0	0	0	0	0	
NYSTAGMUS - POSITIONAL	0	0	0	0	0	0	0	0	0	0	
VISUAL ORIENTATION	S	0	S	P	P	P	P	S	0	S	
PALPEBRAL REFLEX	0	0	0	0	0	0	0	0	0	0	
PINNA TOUCH RESPONSE (N=2)	2	2	0	2	0	0	2	0	0	2	
EXTENSOR POSTURAL THRUST	0	0	0	0	0	0	0	0	0	0	
HOPPING REFLEX	0	0	0	0	0	0	0	0	0	0	
VISUAL PLACING	0	0	0	0	0	0	0	0	0	0	
GRIP STRENGTH - SEMI-QUANT.	0	0	0	0	0	0	0	0	0	4	
GRIP STRENGTH-QUANT.											
(FORELIMB) 1	488	265	306	451	258	482	320	284	426	293	
2	414	643	282	248	374	300	450	293	652	361	
3	539	525	219	466	248	280	589	308	687	267	
(HINDLIMB) 1	426	438	152	125	244	283	628	263	185	129	
2	360	379	181	118	319	282	268	193	310	208	
3	600	249	208	140	190	198	500	241	444	223	
BIZARRE BEHAVIOR	-	-	-	-	-	-	-	-	-	-	
DEFECATION	1	2	4	4	4	2	4	3	3	3	
URINATION	0	1	2	2	2	1	1	1	1	2	
SPONTANEOUS VOCALIZATIONS	7	11	23	1	3	4	8	6	3	3	

ADDITIONAL COMMENTS:

FUNCTIONAL OBSERVATIONAL BATTERY - INDIVIDUAL DATA

DATE: 4-14-88
STUDY DAY: -4
SPECIES: RAT
SEX: MALE

RECORDER: KEN SHEPARD
OBSERVER: LISA BERNARD
TABLE NO.: 9

STUDY NO.: 880017I1
ACC. NO.: 907124
DOSE LEVEL: 200 PPM
PAGE 3 OF 4

MAL NUMBERS	21	22	23	24	25	26	27	28	29	30	COMMENTS/SUMMARY
CAGESIDE OBSERVATION											
HOME CAGE ACTIVITY	S	S	0	0	A	0	A	S	0	S	
FECES AMOUNT	0	0	0	0	0	0	0	0	0	0	
FECES COLOR	0	0	0	0	0	0	0	0	0	0	
FECES CONSISTENCY	0	0	0	0	0	0	0	0	0	0	
URINE AMOUNT	0	0	0	0	0	0	0	0	0	0	
URINE COLOR	0	0	0	0	0	0	0	0	0	0	
BEHAVIOR FROM CAGE	0	0	0	0	0	0	0	0	0	0	
PHYSICAL EXAMINATION											
DEATH	-	-	-	-	-	-	-	-	-	-	
HAIR COAT	0	0	0	0	0	0	0	0	0	0	
MUCOUS MEMB./EYE/SKIN COLOR	0	0	0	0	0	0	0	0	0	0	
BODY TEMPERATURE	0	0	0	0	0	0	0	0	0	0	
RESPIRATORY RATE	0	0	0	0	0	0	0	0	0	0	
RESPIRATORY CHARACTER	0	0	0	0	0	0	0	0	0	0	
LACRIMATION	0	0	0	0	0	0	0	0	0	0	
SALIVATION AMOUNT	0	0	0	0	0	0	0	0	0	0	
SALIVATION ONSET	-	-	-	-	-	-	-	-	-	-	
EYE PROMINENCE	0	0	0	0	0	0	0	0	0	0	
PALPEBRAL CLOSURE	0	0	0	0	0	0	0	0	0	0	
CONVULSION ONSET	-	-	-	-	-	-	-	-	-	-	
TYPE OF CONVULSION	-	-	-	-	-	-	-	-	-	-	
LENGTH OF SEIZURE	-	-	-	-	-	-	-	-	-	-	
LENGTH OF POST-ICTAL PERIOD	-	-	-	-	-	-	-	-	-	-	
BITING	-	-	-	-	-	-	-	-	-	-	
TREMOR SEVERITY	-	-	-	-	-	-	-	-	-	-	
TREMOR ONSET	-	-	-	-	-	-	-	-	-	-	
HANDLING BEHAVIOR	4	0	0	0	0	0	0	0	4	0	
NEUROLOGICAL EXAMINATION											
LOCOMOTOR ACTIVITY (N=2)	4	2	2	2	4	2	2	2	4	2	
REARING ACTIVITY	0	0	0	0	0	0	0	0	0	0	
TAIL ELEVATION	0	0	0	0	0	0	1	0	1	0	
STATIC LIMB POSITION	0	0	0	0	0	0	0	0	0	0	
ABNORMAL GAIT	-	-	-	-	-	-	-	-	-	-	
HYPOTONIC GAIT - HINDLIMB	0	0	0	0	0	0	0	0	0	0	
HYPOTONIC GAIT - FORELIMB	0	0	0	0	0	0	0	0	0	0	
ATAXIC GAIT	0	0	0	0	0	0	0	0	0	0	
HEAD POSITION	0	0	0	0	0	0	0	0	0	0	
APPROACH RESPONSE (N=1)	1	1	0	1	4	1	1	1	1	1	
TOUCH RESPONSE	R	T	0	T	0	R	R	R	T	T	
AUDITORY ORIENTATION	A	A	0	A	A	A	A	A	0	A	
OLFACTORY ORIENTATION	0	0	0	0	0	0	0	0	0	0	
RIGHTING REFLEX	0	0	0	0	0	0	0	0	0	0	
PROPRIOCEPTIVE POSITIONING	0	0	0	0	0	0	0	0	0	0	
TAIL PINCH (N=A)	R	T	0	T	R	0	R	A	R	R	
ABDOMINAL TONE (N=2)	2	2	1	1	2	2	2	2	4	2	
BLADDER TONE	0	0	0	0	0	0	0	0	0	0	
MUSCLE TONE	0	0	0	0	0	0	0	0	0	0	
PASSIVE MANIPULATION	0	0	0	0	0	0	0	0	0	0	
PUPILLARY SIZE	0	0	0	0	0	0	0	0	0	0	
EYE POSITION	0	0	0	0	0	0	0	0	0	0	
NYSTAGMUS - RESTING	0	0	0	0	0	0	0	0	0	0	
NYSTAGMUS - POSITIONAL	0	0	0	0	0	0	0	0	0	0	
VISUAL ORIENTATION	P	P	S	S	P	S	S	S	S	S	
PALPEBRAL REFLEX	0	0	0	0	0	0	0	0	0	0	
PINNA TOUCH RESPONSE (N=2)	0	0	2	0	2	2	2	0	4	0	
EXTENSOR POSTURAL THRUST	0	0	0	0	0	0	0	0	0	0	
HOPPING REFLEX	0	0	0	0	0	0	0	0	0	0	
VISUAL PLACING	0	0	0	0	0	0	0	0	0	0	
GRIP STRENGTH - SEMI-QUANT.	0	0	0	0	0	0	0	0	0	0	
GRIP STRENGTH-QUANT.											
(FORELIMB) 1	216	457	301	431	586	520	234	574	400	509	
2	515	605	236	489	617	501	244	415	350	294	
3	254	521	474	491	339	235	410	417	479	386	
(HINDLIMB) 1	461	254	248	402	329	370	321	689	289	152	
2	325	314	285	269	329	202	462	186	192	150	
3	462	540	158	307	391	252	265	380	294	255	
BIZARRE BEHAVIOR	-	-	-	-	-	-	-	-	-	-	
DEFECATION	4	5	1	2	2	2	4	0	5	4	
URINATION	1	2	1	1	1	2	2	1	2	2	
SPONTANEOUS VOCALIZATIONS	19	1	6	2	4	1	7	3	27	4	

ADDITIONAL COMMENTS:

3542T

FUNCTIONAL OBSERVATIONAL BATTERY - INDIVIDUAL DATA

DATE: 4-14-88
STUDY DAY: -4
SPECIES: RAT
SEX: MALE

RECORDER: KEN SHEPARD
OBSERVER: LISA BERNARD
TABLE NO.: 9

STUDY NO.: 880017I1
ACC. NO.: 907124
DOSE LEVEL: 400 PPM
PAGE 4 OF 4

MAL NUMBERS	31	32	33	34	35	36	37	38	39	40	COMMENTS/SUMMARY
CAGESIDE OBSERVATION											
HOME CAGE ACTIVITY	S	A	0	A	A	A	0	S	0	0	
FECES AMOUNT	0	0	0	0	0	0	0	0	0	0	
FECES COLOR	0	0	0	0	0	0	0	0	0	0	
FECES CONSISTENCY	0	0	0	0	0	0	0	0	0	0	
URINE AMOUNT	0	0	0	0	0	0	0	0	0	0	
URINE COLOR	0	0	0	0	0	0	0	0	0	0	
BEHAVIOR FROM CAGE	0	0	0	0	0	1	0	0	0	4	
PHYSICAL EXAMINATION											
DEATH	-	-	-	-	-	-	-	-	-	-	
HAIR COAT	0	0	0	0	0	0	0	0	0	0	
MUCOUS MEMB./EYE/SKIN COLOR	0	0	0	0	0	0	0	0	0	0	
BODY TEMPERATURE	0	0	0	0	0	0	0	0	0	0	
RESPIRATORY RATE	0	0	0	0	0	0	0	0	0	0	
RESPIRATORY CHARACTER	0	0	0	0	0	0	0	0	0	0	
LACRIMATION	0	0	0	0	0	0	0	0	0	0	
SALIVATION AMOUNT	0	0	0	0	0	0	0	0	0	0	
SALIVATION ONSET	-	-	-	-	-	-	-	-	-	-	
EYE PROMINENCE	0	0	0	0	0	0	0	0	0	0	
PALPEBRAL CLOSURE	0	0	0	0	0	0	0	0	0	0	
CONVULSION ONSET	-	-	-	-	-	-	-	-	-	-	
TYPE OF CONVULSION	-	-	-	-	-	-	-	-	-	-	
LENGTH OF SEIZURE	-	-	-	-	-	-	-	-	-	-	
LENGTH OF POST-ICTAL PERIOD	-	-	-	-	-	-	-	-	-	-	
BITING	-	-	-	-	-	-	-	-	-	-	
TREMOR SEVERITY	-	-	-	-	-	-	-	-	-	-	
TREMOR ONSET	-	-	-	-	-	-	-	-	-	-	
HANDLING BEHAVIOR	0	4	0	0	0	4	0	0	0	8	
NEUROLOGICAL EXAMINATION											
LOCOMOTOR ACTIVITY (N=2)	2	2	2	2	2	4	4	2	2	2	
REARING ACTIVITY	0	0	0	0	0	0	0	0	0	0	
TAIL ELEVATION	2	1	0	0	0	0	0	0	0	1	
STATIC LIMB POSITION	0	0	0	0	0	0	0	0	0	0	
ABNORMAL GAIT	-	-	-	-	-	-	-	-	-	-	
HYPOTONIC GAIT - HINDLIMB	0	0	0	0	0	0	0	0	0	0	
HYPOTONIC GAIT - FORELIMB	0	0	0	0	0	0	0	0	0	0	
ATAXIC GAIT	0	0	0	0	0	0	0	0	0	0	
HEAD POSITION	0	0	0	0	0	0	0	0	0	0	
APPROACH RESPONSE (N=1)	0	6	0	0	0	1	0	4	0	0	
TOUCH RESPONSE	0	C	0	0	T	R	R	T	0	0	
AUDITORY ORIENTATION	A	A	A	A	0	0	0	0	A	A	
OLFACTORY ORIENTATION	0	0	0	0	0	0	0	0	0	0	
RIGHTING REFLEX	0	0	0	0	0	0	0	0	0	0	
PROPRIOCEPTIVE POSITIONING	0	0	0	0	0	0	0	0	0	0	
TAIL PINCH (N=A)	R	R	T	R	A	R	R	A	0	R	
ABDOMINAL TONE (N=2)	2	2	2	2	2	2	2	2	2	4	
BLADDER TONE	0	0	0	0	0	0	0	0	0	0	
MUSCLE TONE	0	0	0	0	0	0	0	0	0	0	
PASSIVE MANIPULATION	0	0	0	0	0	0	0	0	0	0	
PUPILLARY SIZE	0	0	0	0	0	0	0	0	0	0	
EYE POSITION	0	0	0	0	0	0	0	0	0	0	
NYSTAGMUS - RESTING	0	0	0	0	0	0	0	0	0	0	
NYSTAGMUS - POSITIONAL	0	0	0	0	0	0	0	0	0	0	
VISUAL ORIENTATION	0	P	P	0	S	P	P	S	P	S	
PALPEBRAL REFLEX	0	0	0	0	0	0	0	0	0	0	
PINNA TOUCH RESPONSE (N=2)	2	0	4	2	0	2	4	0	2	6	
EXTENSOR POSTURAL THRUST	0	0	0	0	0	0	0	0	0	0	
HOPPING REFLEX	0	0	0	0	0	0	0	0	0	0	
VISUAL PLACING	0	0	0	0	0	0	0	0	0	0	
GRIP STRENGTH - SEMI-QUANT.	0	0	0	0	0	0	4	4	0	0	
GRIP STRENGTH-QUANT.											
(FORELIMB) 1	552	591	249	320	275	501	269	261	570	431	
2	602	507	410	658	400	632	386	497	348	437	
3	642	444	349	623	661	406	583	348	510	389	
(HINDLIMB) 1	181	286	139	200	169	245	310	228	190	330	
2	161	459	271	440	165	115	134	179	218	271	
3	341	458	192	251	170	373	403	140	322	564	
BIZARRE BEHAVIOR	-	-	-	-	-	-	-	-	-	-	
DEFECATION	3	4	8	2	2	4	4	2	5	1	
URINATION	1	1	2	0	0	2	0	2	1	1	
SPONTANEOUS VOCALIZATIONS	9	16	7	3	6	8	7	2	6	27	

ADDITIONAL COMMENTS:

3542T

FUNCTIONAL OBSERVATIONAL BATTERY - INDIVIDUAL DATA

DATE: 4-22-88
STUDY DAY: 4
SPECIES: RAT
SEX: MALE

RECORDER: KEN SHEPARD
OBSERVER: LISA BERNARD
TABLE NO.: 10

STUDY NO.: 880017I1
ACC. NO.: 907124
DOSE LEVEL: 0 PPM
PAGE 1 OF 4

MAL NUMBERS	1	2	3	4	5	6	7	8	9	10	COMMENTS/SUMMARY
CAGESIDE OBSERVATION											
HOME CAGE ACTIVITY	S	0	0	0	A	A	A	0	S	S	
FECES AMOUNT	0	0	0	0	0	0	0	0	0	0	
FECES COLOR	0	0	0	0	0	0	0	0	0	0	
FECES CONSISTENCY	0	0	0	0	0	0	F	0	0	0	
URINE AMOUNT	0	0	0	0	0	0	0	0	0	0	
URINE COLOR	0	0	0	0	0	0	0	0	0	0	
BEHAVIOR FROM CAGE	0	0	0	0	0	0	0	0	0	1	
PHYSICAL EXAMINATION											
DEATH	-	-	-	-	-	-	-	-	-	-	
HAIR COAT	0	0	0	0	0	0	0	0	0	0	
MUCOUS MEMB./EYE/SKIN COLOR	0	0	0	0	0	0	0	0	0	0	
BODY TEMPERATURE	0	0	0	0	0	0	0	0	0	0	
RESPIRATORY RATE	0	0	0	0	0	0	0	0	0	0	
RESPIRATORY CHARACTER	0	0	0	0	0	0	0	0	0	0	
LACRIMATION	0	0	0	0	0	0	0	0	0	0	
SALIVATION AMOUNT	0	0	0	0	0	0	0	0	0	0	
SALIVATION ONSET	-	-	-	-	-	-	-	-	-	-	
EYE PROMINENCE	0	0	0	0	0	0	0	0	0	0	
PALPEBRAL CLOSURE	0	0	0	0	0	0	0	0	0	0	
CONVULSION ONSET	-	-	-	-	-	-	-	-	-	-	
TYPE OF CONVULSION	-	-	-	-	-	-	-	-	-	-	
LENGTH OF SEIZURE	-	-	-	-	-	-	-	-	-	-	
LENGTH OF POST-ICTAL PERIOD	-	-	-	-	-	-	-	-	-	-	
BITING	-	-	-	-	-	-	-	-	-	-	
TREMOR SEVERITY	-	-	-	-	-	-	-	-	-	-	
TREMOR ONSET	-	-	-	-	-	-	-	-	-	-	
HANDLING BEHAVIOR	0	0	0	0	0	0	0	0	0	4	
NEUROLOGICAL EXAMINATION											
LOCOMOTOR ACTIVITY (N=2)	2	2	2	2	2	2	2	2	2	1	
REARING ACTIVITY	0	0	0	0	0	0	0	0	0	0	
TAIL ELEVATION	0	0	0	0	0	0	0	2	0	0	
STATIC LIMB POSITION	0	0	0	0	0	0	0	0	0	0	
ABNORMAL GAIT	-	-	-	-	-	-	-	-	-	-	
HYPOTONIC GAIT - HINDLIMB	0	0	0	0	0	0	0	0	0	0	
HYPOTONIC GAIT - FORELIMB	0	0	0	0	0	0	0	0	0	0	
ATAXIC GAIT	0	0	0	0	0	0	0	0	0	0	
HEAD POSITION	0	0	0	0	0	0	0	0	0	0	
APPROACH RESPONSE (N=1)	1	1	1	1	0	1	0	1	1	0	
TOUCH RESPONSE	T	T	T	0	R	R	T	T	T	R	
AUDITORY ORIENTATION	A	0	0	A	0	A	A	0	0	A	
OLFACTORY ORIENTATION	A	A	0	0	0	0	0	A	0	A	
RIGHTING REFLEX	0	0	0	0	0	0	0	0	0	0	
PROPRIOCEPTIVE POSITIONING	0	0	0	0	0	0	0	0	0	0	
TAIL PINCH (N=A)	R	T	R	T	R	R	R	T	T	A	
ABDOMINAL TONE (N=2)	2	2	2	2	1	2	2	2	2	2	
BLADDER TONE	0	0	0	0	0	0	0	0	0	0	
MUSCLE TONE	0	0	0	0	0	0	0	0	0	0	
PASSIVE MANIPULATION	0	0	0	0	0	0	0	0	0	0	
PUPILLARY SIZE	0	0	0	0	0	0	0	0	0	0	
EYE POSITION	0	0	0	0	0	0	0	0	0	0	
NYSTAGMUS - RESTING	0	0	0	0	0	0	0	0	0	0	
NYSTAGMUS - POSITIONAL	0	0	0	0	0	0	0	0	0	0	
VISUAL ORIENTATION	S	S	S	S	S	P	S	S	P	S	
PALPEBRAL REFLEX	0	0	0	0	0	0	0	0	0	0	
PINNA TOUCH RESPONSE (N=2)	4	4	4	2	2	2	4	4	2	2	
EXTENSOR POSTURAL THRUST	0	0	0	0	0	0	0	0	0	0	
HOPPING REFLEX	0	0	0	0	0	0	0	0	0	0	
VISUAL PLACING	0	0	0	0	0	0	0	0	0	0	
GRIP STRENGTH - SEMI-QUANT.	0	0	0	0	0	0	0	0	0	0	
GRIP STRENGTH-QUANT.											
(FORELIMB) 1	538	362	653	550	589	604	639	470	389	282	
2	759	397	500	329	623	556	508	671	540	521	
3	647	354	587	431	310	418	483	583	341	342	
(HINDLIMB) 1	280	338	223	314	268	282	180	249	538	409	
2	154	430	384	215	334	325	154	658	520	264	
3	267	263	193	285	281	349	251	361	659	303	
BIZARRE BEHAVIOR	-	-	-	-	-	-	-	-	-	-	
DEFECATION	5	3	4	0	0	0	3	5	0	3	
URINATION	1	2	1	1	0	1	1	1	0	1	
SPONTANEOUS VOCALIZATIONS	8	11	2	7	4	2	6	9	2	17	

ADDITIONAL COMMENTS:

FUNCTIONAL OBSERVATIONAL BATTERY - INDIVIDUAL DATA

DATE: 4-22-88
STUDY DAY: 4
SPECIES: RAT
SEX: MALE

RECORDER: KEN SHEPARD
OBSERVER: LISA BERNARD
TABLE NO.: 10

STUDY NO.: 88001711
ACC. NO.: 907124
DOSE LEVEL: 100 PPM
PAGE 2 OF 4

MAL NUMBERS	11	12	13	14	15	16	17	18	19	20	COMMENTS/SUMMARY
CAGESIDE OBSERVATION											
HOME CAGE ACTIVITY	A	S	0	0	A	S	A	0	A	A	
FECES AMOUNT	0	0	0	0	0	0	0	0	0	0	
FECES COLOR	0	0	0	0	0	0	0	0	0	0	
FECES CONSISTENCY	0	0	0	0	0	0	0	0	0	0	
URINE AMOUNT	0	0	0	0	0	0	0	0	0	0	
URINE COLOR	0	0	0	0	0	0	0	0	0	0	
BEHAVIOR FROM CAGE	0	1	0	0	0	0	0	0	0	0	
PHYSICAL EXAMINATION											
DEATH	-	-	-	-	-	-	-	-	-	-	
HAIR COAT	0	0	0	0	0	0	0	0	0	0	
MUCOUS MEMB./EYE/SKIN COLOR	0	0	0	0	0	0	0	0	0	0	
BODY TEMPERATURE	0	0	0	0	0	0	0	0	0	0	
RESPIRATORY RATE	0	0	0	0	0	0	0	0	0	0	
RESPIRATORY CHARACTER	0	0	0	0	0	0	0	0	0	0	
LACRIMATION	0	0	0	0	0	0	0	0	0	0	
SALIVATION AMOUNT	0	0	0	0	0	0	0	0	0	0	
SALIVATION ONSET	-	-	-	-	-	-	-	-	-	-	
EYE PROMINENCE	0	0	0	0	0	0	0	0	0	0	
PALPEBRAL CLOSURE	0	0	0	0	0	0	0	0	0	0	
CONVULSION ONSET	-	-	-	-	-	-	-	-	-	-	
TYPE OF CONVULSION	-	-	-	-	-	-	-	-	-	-	
LENGTH OF SEIZURE	-	-	-	-	-	-	-	-	-	-	
LENGTH OF POST-ICTAL PERIOD	-	-	-	-	-	-	-	-	-	-	
BITING	-	-	-	-	-	-	-	-	-	-	
TREMOR SEVERITY	-	-	-	-	-	-	-	-	-	-	
TREMOR ONSET	-	-	-	-	-	-	-	-	-	-	
HANDLING BEHAVIOR	0	4	0	0	0	0	0	4	0	0	
NEUROLOGICAL EXAMINATION											
LOCOMOTOR ACTIVITY (N=2)	2	2	2	2	2	2	2	2	2	2	
REARING ACTIVITY	0	2	0	0	0	0	0	0	0	0	
TAIL ELEVATION	0	1	1	0	0	0	0	1	0	0	
STATIC LIMB POSITION	0	0	0	0	0	0	0	0	0	0	
ABNORMAL GAIT	-	-	-	-	-	-	-	-	-	-	
HYPOTONIC GAIT - HINDLIMB	0	0	0	0	0	0	0	0	0	0	
HYPOTONIC GAIT - FORELIMB	0	0	0	0	0	0	0	0	0	0	
ATAXIC GAIT	0	0	0	0	0	0	0	0	0	0	
HEAD POSITION	0	0	0	0	0	0	0	0	0	0	
APPROACH RESPONSE (N=1)	1	1	6	0	1	1	0	1	0	6	
TOUCH RESPONSE	0	R	0	0	T	F	0	T	R	R	
AUDITORY ORIENTATION	0	0	A	A	0	A	A	A	A	A	
OLFACTORY ORIENTATION	0	0	A	0	0	A	A	0	0	0	
RIGHTING REFLEX	0	0	0	0	0	0	0	0	0	0	
PROPRIOCEPTIVE POSITIONING	0	0	0	0	0	0	0	0	0	0	
TAIL PINCH (N=A)	T	R	R	R	R	T	0	T	R	R	
ABDOMINAL TONE (N=2)	2	2	2	2	2	2	2	2	1	2	
BLADDER TONE	0	0	0	0	0	0	0	0	0	0	
MUSCLE TONE	0	0	0	0	0	0	0	0	0	0	
PASSIVE MANIPULATION	0	0	0	0	0	0	0	0	0	0	
PUPILLARY SIZE	0	0	0	0	0	0	0	0	0	0	
EYE POSITION	0	0	0	0	0	0	0	0	0	0	
NYSTAGMUS - RESTING	0	0	0	0	0	0	0	0	0	0	
NYSTAGMUS - POSITIONAL	0	0	0	0	0	0	0	0	0	0	
VISUAL ORIENTATION	S	S	S	P	0	P	S	S	P	S	
PALPEBRAL REFLEX	0	0	0	0	0	0	0	0	0	0	
PINNA TOUCH RESPONSE (N=2)	2	4	4	2	2	0	2	2	0	4	
EXTENSOR POSTURAL THRUST	0	0	0	0	0	0	0	0	0	0	
HOPPING REFLEX	0	0	0	0	0	0	0	0	0	0	
VISUAL PLACING	0	0	0	0	0	0	0	0	0	0	
GRIP STRENGTH - SEMI-QUANT.	0	0	0	0	0	0	0	0	0	0	
GRIP STRENGTH-QUANT.											
(FORELIMB) 1	331	799	715	372	348	530	309	660	632	414	
2	569	360	461	497	511	683	468	458	668	345	
3	535	391	653	593	588	498	391	424	667	767	
(HINDLIMB) 1	664	248	158	204	251	360	298	391	435	220	
2	499	175	251	184	721	118	483	402	448	504	
3	563	325	329	269	385	512	340	400	211	416	
BIZARRE BEHAVIOR	-	-	-	-	-	-	-	-	-	-	
DEFECATION	0	6	7	1	0	2	4	0	4	9	
URINATION	0	2	0	0	1	1	1	1	1	1	
SPONTANEOUS VOCALIZATIONS	5	18	8	2	4	3	6	17	9	2	

ADDITIONAL COMMENTS:

FUNCTIONAL OBSERVATIONAL BATTERY - INDIVIDUAL DATA

DATE: 4-22-88
STUDY DAY: 4
SPECIES: RAT
SEX: MALE

RECORDER: KEN SHEPARD
OBSERVER: LISA BERNARD
TABLE NO.: 10

STUDY NO.: 880017I1
ACC. NO.: 907124
DOSE LEVEL: 200 PPM
PAGE 3 OF 4

MAL NUMBERS	21	22	23	24	25	26	27	28	29	30	COMMENTS/SUMMARY
CAGESIDE OBSERVATION											
HOME CAGE ACTIVITY	0	A	A	0	0	S	0	0	0	A	
FECES AMOUNT	0	0	0	0	0	0	0	0	0	0	
FECES COLOR	0	0	0	0	0	0	0	0	0	0	
FECES CONSISTENCY	0	0	0	0	0	0	0	0	0	0	
URINE AMOUNT	0	0	0	0	0	0	0	0	0	0	
URINE COLOR	0	0	0	0	0	0	0	0	0	0	
BEHAVIOR FROM CAGE	0	0	0	0	0	0	0	0	0	0	
PHYSICAL EXAMINATION											
DEATH	-	-	-	-	-	-	-	-	-	-	
HAIR COAT	0	0	0	0	0	0	0	0	0	0	
MUCOUS MEMB./EYE/SKIN COLOR	0	0	0	0	0	0	0	0	0	0	
BODY TEMPERATURE	0	0	0	0	0	0	0	0	0	0	
RESPIRATORY RATE	0	0	0	0	0	0	0	0	0	0	
RESPIRATORY CHARACTER	0	0	0	0	0	0	0	0	0	0	
LACRIMATION	0	0	0	0	0	0	0	0	0	0	
SALIVATION AMOUNT	0	0	0	0	0	0	0	0	0	0	
SALIVATION ONSET	-	-	-	-	-	-	-	-	-	-	
EYE PROMINENCE	0	0	0	0	0	0	0	0	0	0	
PALPEBRAL CLOSURE	0	0	0	0	0	0	0	0	0	0	
CONVULSION ONSET	-	-	-	-	-	-	-	-	-	-	
TYPE OF CONVULSION	-	-	-	-	-	-	-	-	-	-	
LENGTH OF SEIZURE	-	-	-	-	-	-	-	-	-	-	
LENGTH OF POST-ICTAL PERIOD	-	-	-	-	-	-	-	-	-	-	
BITING	-	-	-	-	-	-	-	-	-	-	
TREMOR SEVERITY	-	-	-	-	-	-	-	-	-	-	
TREMOR ONSET	-	-	-	-	-	-	-	-	-	-	
HANDLING BEHAVIOR	0	0	0	0	0	0	0	0	4	4	
NEUROLOGICAL EXAMINATION											
LOCOMOTOR ACTIVITY (N=2)	2	2	2	2	2	1	2	2	2	1	
REARING ACTIVITY	0	0	0	0	0	0	0	0	0	0	
TAIL ELEVATION	0	0	0	0	0	0	0	0	0	1	
STATIC LIMB POSITION	0	0	0	0	0	0	0	0	0	0	
ABNORMAL GAIT	-	-	-	-	-	-	-	-	-	-	
HYPOTONIC GAIT - HINDLIMB	0	0	0	0	0	0	0	0	0	0	
HYPOTONIC GAIT - FORELIMB	0	0	0	0	0	0	0	0	0	0	
ATAXIC GAIT	0	0	0	0	0	0	0	0	0	0	
HEAD POSITION	0	0	0	0	0	0	0	0	0	0	
APPROACH RESPONSE (N=1)	0	1	2	0	0	0	0	1	1	0	
TOUCH RESPONSE	T	0	0	T	R	T	0	R	R	R	
AUDITORY ORIENTATION	A	A	A	0	A	A	A	A	A	A	
OLFACTORY ORIENTATION	A	A	0	0	A	A	A	0	0	A	
RIGHTING REFLEX	0	0	0	0	0	0	0	0	0	0	
PROPRIOCEPTIVE POSITIONING	0	0	0	0	0	0	0	0	0	0	
TAIL PINCH (N=A)	R	T	T	T	R	0	R	T	R	T	
ABDOMINAL TONE (N=2)	2	2	2	2	2	2	2	2	4	2	
BLADDER TONE	0	0	0	0	0	0	0	0	0	0	
MUSCLE TONE	0	0	0	0	0	0	0	0	0	0	
PASSIVE MANIPULATION	0	0	0	0	0	0	0	0	0	0	
PUPILLARY SIZE	0	0	0	0	0	0	0	0	0	0	
EYE POSITION	0	0	0	0	0	0	0	0	0	0	
NYSTAGMUS - RESTING	0	0	0	0	0	0	0	0	0	0	
NYSTAGMUS - POSITIONAL	0	0	0	0	0	0	0	0	0	0	
VISUAL ORIENTATION	S	S	P	S	S	P	P	P	S	0	
PALPEBRAL REFLEX	0	0	0	0	0	0	0	0	0	0	
PINNA TOUCH RESPONSE (N=2)	4	4	0	4	0	2	2	4	4	0	
EXTENSOR POSTURAL THRUST	0	0	0	0	0	0	0	0	0	0	
HOPPING REFLEX	0	0	0	0	0	0	0	0	0	0	
VISUAL PLACING	0	0	0	0	0	0	0	0	0	0	
GRIP STRENGTH - SEMI-QUANT.	0	0	0	0	0	0	0	0	0	0	
GRIP STRENGTH-QUANT.											
(FORELIMB) 1	378	487	630	620	465	400	592	548	561	461	
2	399	285	519	571	310	618	584	591	500	491	
3	426	559	577	529	461	557	542	513	469	391	
(HINDLIMB) 1	321	237	455	277	340	254	246	244	579	248	
2	295	238	298	328	219	287	600	585	282	330	
3	180	589	328	259	293	581	289	319	434	325	
BIZARRE BEHAVIOR	-	-	-	-	-	-	-	-	-	-	
DEFECATION	4	3	2	3	2	3	2	3	3	2	
URINATION	0	1	1	1	0	2	0	1	1	1	
SPONTANEOUS VOCALIZATIONS	9	3	4	6	2	4	6	2	14	5	

ADDITIONAL COMMENTS: Rat #30 - End of tail is red in color turning darker red at the tip of the tail.
Rat #28 - Fourth digit on right front paw is bent at joint. Does not seem to hamper animal.

FUNCTIONAL OBSERVATIONAL BATTERY - INDIVIDUAL DATA

DATE: 4-22-88
STUDY DAY: 4
SPECIES: RAT
SEX: MALE

RECORDER: KEN SHEPARD
OBSERVER: LISA BERNARD
TABLE NO.: 10

STUDY NO.: 88001711
ACC. NO.: 907124
DOSE LEVEL: 400 PPM
PAGE 4 OF 4

MAL NUMBERS	31	32	33	34	35	36	37	38	39	40	COMMENTS/SUMMARY
CAGESIDE OBSERVATION											
HOME CAGE ACTIVITY	A	A	S	0	0	A	0	0	0	A	
FECES AMOUNT	0	0	0	0	0	0	0	0	0	0	
FECES COLOR	0	0	0	0	0	0	0	0	0	0	
FECES CONSISTENCY	0	0	0	0	0	0	0	0	0	0	
URINE AMOUNT	0	0	0	0	0	0	0	0	0	0	
URINE COLOR	0	0	0	0	0	0	0	0	0	0	
BEHAVIOR FROM CAGE	0	0	0	0	0	1	0	0	0	0	
PHYSICAL EXAMINATION											
DEATH	-	-	-	-	-	-	-	-	-	-	
HAIR COAT	0	0	0	0	0	0	0	0	0	0	
MUCOUS MEMB./EYE/SKIN COLOR	0	0	0	0	0	0	0	0	0	0	
BODY TEMPERATURE	0	0	0	0	0	0	0	0	0	0	
RESPIRATORY RATE	0	0	0	0	0	0	0	0	0	0	
RESPIRATORY CHARACTER	0	0	0	0	0	0	0	0	0	0	
LACRIMATION	0	0	0	0	0	0	0	0	0	0	
SALIVATION AMOUNT	0	0	0	0	0	0	0	0	0	0	
SALIVATION ONSET	-	-	-	-	-	-	-	-	-	-	
EYE PROMINENCE	0	0	0	0	0	0	0	0	0	0	
PALPEBRAL CLOSURE	0	0	0	0	0	0	0	0	0	0	
CONVULSION ONSET	-	-	-	-	-	-	-	-	-	-	
TYPE OF CONVULSION	-	-	-	-	-	-	-	-	-	-	
LENGTH OF SEIZURE	-	-	-	-	-	-	-	-	-	-	
LENGTH OF POST-ICTAL PERIOD	-	-	-	-	-	-	-	-	-	-	
BITING	-	-	-	-	-	-	-	-	-	-	
TREMOR SEVERITY	-	-	-	-	-	-	-	-	-	-	
TREMOR ONSET	-	-	-	-	-	-	-	-	-	-	
HANDLING BEHAVIOR	0	0	0	0	0	4	0	0	0	4	
NEUROLOGICAL EXAMINATION											
LOCOMOTOR ACTIVITY (N=2)	2	2	2	2	2	2	2	2	2	1	
REARING ACTIVITY	0	0	0	0	0	2	0	0	0	0	
TAIL ELEVATION	1	0	0	0	0	0	0	0	0	0	
STATIC LIMB POSITION	0	0	0	0	0	0	0	0	0	0	
ABNORMAL GAIT	-	-	-	-	-	-	-	-	-	-	
HYPOTONIC GAIT - HINDLIMB	0	0	0	0	0	0	0	0	0	0	
HYPOTONIC GAIT - FORELIMB	0	0	0	0	0	0	0	0	0	0	
ATAXIC GAIT	0	0	0	0	0	0	0	0	0	0	
HEAD POSITION	0	0	0	0	0	0	0	0	0	0	
APPROACH RESPONSE (N=1)	1	4	0	1	1	1	1	1	1	0	
TOUCH RESPONSE	R	R	R	0	R	T	R	T	0	T	
AUDITORY ORIENTATION	0	A	A	0	A	A	A	0	A	A	
OLFACTORY ORIENTATION	0	0	A	0	0	0	0	0	0	A	
RIGHTING REFLEX	0	0	0	0	0	0	0	0	0	0	
PROPRIOCEPTIVE POSITIONING	0	0	0	0	0	0	0	0	0	0	
TAIL PINCH (N=A)	R	T	*	R	R	*	T	R	T	T	
ABDOMINAL TONE (N=2)	2	2	2	2	2	2	2	4	2	2	
BLADDER TONE	0	0	0	0	0	0	0	0	0	0	
MUSCLE TONE	0	0	0	0	0	0	0	0	0	0	
PASSIVE MANIPULATION	0	0	0	0	0	0	0	0	0	0	
PUPILLARY SIZE	0	0	0	0	0	0	0	0	0	0	
EYE POSITION	0	0	0	0	0	0	0	0	0	0	
NYSTAGMUS - RESTING	0	0	0	0	0	0	0	0	0	0	
NYSTAGMUS - POSITIONAL	0	0	0	0	0	0	0	0	0	0	
VISUAL ORIENTATION	S	P	P	P	S	P	S	S	P	S	
PALPEBRAL REFLEX	0	0	0	0	0	0	0	0	0	0	
PINNA TOUCH RESPONSE (N=2)	4	2	4	2	2	4	4	2	0	4	
EXTENSOR POSTURAL THRUST	0	0	0	0	0	0	0	0	0	0	
HOPPING REFLEX	0	0	0	0	0	0	0	0	0	0	
VISUAL PLACING	0	0	0	0	0	0	0	0	0	0	
GRIP STRENGTH - SEMI-QUANT.	0	0	0	0	0	0	0	0	0	0	
GRIP STRENGTH-QUANT.											
(FORELIMB) 1	621	621	329	422	391	660	382	480	413	622	
2	342	648	460	403	722	609	492	529	410	604	
3	650	748	460	598	314	660	430	516	479	589	
(HINDLIMB) 1	401	214	178	423	184	179	424	158	141	355	
2	233	322	498	462	731	161	401	287	292	648	
3	472	300	328	367	450	452	399	172	427	579	
BIZARRE BEHAVIOR	-	-	-	-	-	-	-	-	-	-	
DEFECATION	2	3	3	3	0	4	1	0	4	2	
URINATION	1	2	2	1	0	0	0	0	1	1	
SPONTANEOUS VOCALIZATIONS	4	4	4	6	5	17	7	4	2	26	

ADDITIONAL COMMENTS: *Rat #36 & #33 - Only response to tail pinch was animal pulled tail away from forceps.

3542T

FUNCTIONAL OBSERVATIONAL BATTERY - INDIVIDUAL DATA

DATE: 4-28-88
STUDY DAY: 10
SPECIES: RAT
SEX: MALE

RECORDER: KEN SHEPARD
OBSERVER: LISA BERNARD
TABLE NO.: 11

STUDY NO.: 88001711
ACC. NO.: 907124
DOSE LEVEL: 0 PPM
PAGE 1 OF 4

MAL NUMBERS	1	2	3	4	5	6	7	8	9	10	COMMENTS/SUMMARY
CAGESIDE OBSERVATION											
HOME CAGE ACTIVITY	A	0	0	0	A	S	0	S	S	A	
FECES AMOUNT	0	0	0	0	0	0	0	0	0	0	
FECES COLOR	0	0	0	0	0	0	0	0	0	0	
FECES CONSISTENCY	0	0	0	0	0	0	0	0	0	0	
URINE AMOUNT	0	0	0	0	0	0	0	0	0	0	
URINE COLOR	0	0	0	0	0	0	0	0	0	0	
BEHAVIOR FROM CAGE	0	0	0	0	0	0	0	0	0	0	
PHYSICAL EXAMINATION											
DEATH	-	-	-	-	-	-	-	-	-	-	
HAIR COAT	0	0	0	0	0	0	0	0	0§	0	§Rat #9-Alopecia forepaws
MUCOUS MEMB./EYE/SKIN COLOR	0	0	0	0	0	0	0	0	0	0	
BODY TEMPERATURE	0	0	0	0	0	0	0	0	0	0	
RESPIRATORY RATE	0	0	0	0	0	0	0	0	0	0	
RESPIRATORY CHARACTER	0	0	0	0	0	0	0	0	0	0	
LACRIMATION	0	0	0	0	0	0	0	0	0	0	
SALIVATION AMOUNT	0	0	0	0	0	0	0	0	0	0	
SALIVATION ONSET	-	-	-	-	-	-	-	-	-	-	
EYE PROMINENCE	0	0	0	0	0	0	0	0	0	0	
PALPEBRAL CLOSURE	0	0	0	0	0	0	0	0	0	0	
CONVULSION ONSET	-	-	-	-	-	-	-	-	-	-	
TYPE OF CONVULSION	-	-	-	-	-	-	-	-	-	-	
LENGTH OF SEIZURE	-	-	-	-	-	-	-	-	-	-	
LENGTH OF POST-ICTAL PERIOD	-	-	-	-	-	-	-	-	-	-	
BITING	-	-	-	-	-	-	-	-	-	-	
TREMOR SEVERITY	-	-	-	-	-	-	-	-	-	-	
TREMOR ONSET	-	-	-	-	-	-	-	-	-	-	
HANDLING BEHAVIOR	0	0	0	0	0	0	0	0	0	0	
NEUROLOGICAL EXAMINATION											
LOCOMOTOR ACTIVITY (N=2)	2	4	1	1	2	2	2	2	2	2	
REARING ACTIVITY	0	0	0	0	0	0	0	0	2	0	
TAIL ELEVATION	0	0	2	0	0	0	0	2	1	0	
STATIC LIMB POSITION	0	0	0	0	0	0	0	0	0	0	
ABNORMAL GAIT	-	-	-	-	-	-	-	-	-	-	
HYPOTONIC GAIT - HINDLIMB	0	0	0	0	0	0	0	0	0	0	
HYPOTONIC GAIT - FORELIMB	0	0	0	0	0	0	0	0	0	0	
ATAXIC GAIT	0	0	0	0	0	0	0	0	0	0	
HEAD POSITION	0	0	0	0	0	0	0	0	0	0	
APPROACH RESPONSE (N=1)	1	0	1	0	0	1	0	1	0	0	
TOUCH RESPONSE	T	0	R	0	0	0	R	T	0	R	
AUDITORY ORIENTATION	0	0	A	A	0	A	A	0	A	A	
OLFACTORY ORIENTATION	A	0	A	A	A	A	A	0	A	A	
RIGHTING REFLEX	0	0	0	0	0	0	0	0	0	0	
PROPRIOCEPTIVE POSITIONING	0	0	0	0	0	0	0	0	0	0	
TAIL PINCH (N=A)	A	T	T	A	R	*	R	R	R	R	*Animal jerked tail away
ABDOMINAL TONE (N=2)	2	4	2	2	2	2	2	2	2	4	
BLADDER TONE	0	0	0	0	0	0	0	0	0	0	
MUSCLE TONE	0	T	0	0	0	0	0	0	0	0	
PASSIVE MANIPULATION	0	R	0	0	0	0	0	0	0	R	
PUPILLARY SIZE	0	0	0	0	0	0	0	0	0	0	
EYE POSITION	0	0	0	0	0	0	0	0	0	0	
NYSTAGMUS - RESTING	0	0	0	0	0	0	0	0	0	0	
NYSTAGMUS - POSITIONAL	0	0	0	0	0	0	0	0	0	0	
VISUAL ORIENTATION	0	0	S	S	S	S	S	S	S	P	
PALPEBRAL REFLEX	0	0	0	0	0	0	0	0	0	0	
PINNA TOUCH RESPONSE (N=2)	4	2	2	0	2	0	2	4	0	2	
EXTENSOR POSTURAL THRUST	0	0	0	0	0	0	0	0	0	0	
HOPPING REFLEX	0	0	0	0	0	0	0	0	0	0	
VISUAL PLACING	0	0	0	0	0	0	0	0	0	0	
GRIP STRENGTH - SEMI-QUANT.	0	0	0	0	0	0	0	0	0	0	
GRIP STRENGTH-QUANT.											
(FORELIMB) 1	512	462	515	309	608	704	398	698	439	325	
2	608	626	629	442	641	673	631	732	728	615	
3	579	597	672	674	618	428	561	752	792	289	
(HINDLIMB) 1	302	270	343	390	503	610	261	400	428	248	
2	292	382	241	720	809	471	482	362	525	329	
3	746	648	219	928	310	360	731	371	547	741	
BIZARRE BEHAVIOR	-	-	-	-	-	-	-	-	-	-	
DEFECATION	4	3	4	2	0	0	1	2	1	1	
URINATION	0	1	0	0	0	0	0	0	1	0	
SPONTANEOUS VOCALIZATIONS	4	9	2	4	2	1	3	4	6	11	

ADDITIONAL COMMENTS:

3542T

FUNCTIONAL OBSERVATIONAL BATTERY - INDIVIDUAL DATA

DATE: 4-28-88
STUDY DAY: 10
SPECIES: RAT
SEX: MALE

RECORDER: KEN SHEPARD
OBSERVER: LISA BERNARD
TABLE NO.: 11

STUDY NO.: 880017I1
ACC. NO.: 907124
DOSE LEVEL: 100 PPM
PAGE 2 OF 4

▲MAL NUMBERS	11	12	13	14	15	16	17	18	19	20	COMMENTS/SUMMARY
CAGESIDE OBSERVATION											
HOME CAGE ACTIVITY	0	S	0	S	0	S	A	A	0	A	
FECES AMOUNT	0	0	0	0	0	0	0	0	0	0	
FECES COLOR	0	0	0	0	0	0	0	0	0	0	
FECES CONSISTENCY	0	0	0	0	0	0	0	0	0	0	
URINE AMOUNT	0	0	0	0	0	0	0	0	0	0	
URINE COLOR	0	0	0	0	0	0	0	0	0	0	
BEHAVIOR FROM CAGE	0	0	0	0	0	0	0	0	0	0	
PHYSICAL EXAMINATION											
DEATH	-	-	-	-	-	-	-	-	-	-	
HAIR COAT	0	0	0	0	0	0	0	0	0	0	
MUCOUS MEMB./EYE/SKIN COLOR	0	0	0	0	0	0	0	0	0	0	
BODY TEMPERATURE	0	0	0	0	0	0	0	0	0	0	
RESPIRATORY RATE	0	0	0	0	0	0	0	0	0	0	
RESPIRATORY CHARACTER	0	0	0	0	0	0	0	0	0	0	
LACRIMATION	0	0	0	0	0	0	0	0	0	0	
SALIVATION AMOUNT	0	0	0	0	0	0	0	0	0	0	
SALIVATION ONSET	-	-	-	-	-	-	-	-	-	-	
EYE PROMINENCE	0	0	0	0	0	0	0	0	0	0	
PALPEBRAL CLOSURE	0	0	0	0	0	0	0	0	0	0	
CONVULSION ONSET	-	-	-	-	-	-	-	-	-	-	
TYPE OF CONVULSION	-	-	-	-	-	-	-	-	-	-	
LENGTH OF SEIZURE	-	-	-	-	-	-	-	-	-	-	
LENGTH OF POST-ICTAL PERIOD	-	-	-	-	-	-	-	-	-	-	
BITING	-	-	-	-	-	-	-	-	-	-	
TREMOR SEVERITY	-	-	-	-	-	-	-	-	-	-	
TREMOR ONSET	-	-	-	-	-	-	-	-	-	-	
HANDLING BEHAVIOR	0	4	4	0	0	0	0	0	4	0	
NEUROLOGICAL EXAMINATION											
LOCOMOTOR ACTIVITY (N=2)	1	1	2	2	1	2	2	2	2	2	
REARING ACTIVITY	0	2	0	0	0	0	0	2	0	0	
TAIL ELEVATION	0	1	0	0	1	2	0	0	0	1	
STATIC LIMB POSITION	0	0	0	0	0	0	0	0	0	0	
ABNORMAL GAIT	-	-	-	-	-	-	-	-	-	-	
HYPOTONIC GAIT - HINDLIMB	0	0	0	0	0	0	0	0	0	0	
HYPOTONIC GAIT - FORELIMB	0	0	0	0	0	0	0	0	0	0	
ATAXIC GAIT	0	0	0	0	0	0	0	0	0	0	
HEAD POSITION	0	0	0	0	0	0	0	0	0	0	
APPROACH RESPONSE (N=1)	1	0	0	1	6	0	1	1	1	1	
TOUCH RESPONSE	0	R	R	T	0	0	R	C	R	R	
AUDITORY ORIENTATION	0	A	A	A	A	A	A	A	A	0	
OLFACTORY ORIENTATION	A	A	A	A	A	A	0	A	A	0	
RIGHTING REFLEX	0	0	0	0	0	0	0	0	0	0	
PROPRIOCEPTIVE POSITIONING	0	0	0	0	0	0	0	0	0	0	
TAIL PINCH (N=A)	0	T	*	0	T	R	R	*	0	T	*Animal jerked tail away.
ABDOMINAL TONE (N=2)	2	2	2	2	2	2	2	2	2	2	
BLADDER TONE	0	0	0	0	0	0	0	0	0	0	
MUSCLE TONE	0	0	0	0	0	0	0	0	0	0	
PASSIVE MANIPULATION	0	0	0	0	0	0	0	0	0	0	
PUPILLARY SIZE	0	0	0	0	0	0	0	0	0	0	
EYE POSITION	0	0	0	0	0	0	0	0	0	0	
NYSTAGMUS - RESTING	0	0	0	0	0	0	0	0	0	0	
NYSTAGMUS - POSITIONAL	0	0	0	0	0	0	0	0	0	0	
VISUAL ORIENTATION	P	P	P	P	P	S	S	0	P	S	
PALPEBRAL REFLEX	0	0	0	0	0	0	0	0	0	0	
PINNA TOUCH RESPONSE (N=2)	0	0	4	2	2	0	0	6	2	2	
EXTENSOR POSTURAL THRUST	0	0	0	0	0	0	0	0	0	0	
HOPPING REFLEX	0	0	0	0	0	0	0	0	0	0	
VISUAL PLACING	0	0	0	0	0	0	0	0	0	0	
GRIP STRENGTH - SEMI-QUANT.	0	0	0	0	0	0	0	0	0	0	
GRIP STRENGTH-QUANT.											
(FORELIMB) 1	570	721	559	591	524	372	339	598	668	509	
2	527	759	631	719	515	421	650	670	652	328	
3	443	716	645	701	561	442	299	541	685	453	
(HINDLIMB) 1	200	238	263	274	515	218	310	479	311	396	
2	493	400	149	318	453	205	673	370	371	418	
3	555	294	324	273	607	359	658	269	400	332	
BIZARRE BEHAVIOR	-	F	-	-	-	-	-	-	-	-	
DEFECATION	0	1	5	2	0	4	5	6	2	3	
URINATION	0	1	0	0	0	0	2	1	1	2	
SPONTANEOUS VOCALIZATIONS	6	15	18	4	6	4	4	2	14	3	

ADDITIONAL COMMENTS:

FUNCTIONAL OBSERVATIONAL BATTERY - INDIVIDUAL DATA

DATE: 4-28-88
STUDY DAY: 10
SPECIES: RAT
SEX: MALE

RECORDER: KEN SHEPARD
OBSERVER: LISA BERNARD
TABLE NO.: 11

STUDY NO.: 880017I1
ACC. NO.: 907124
DOSE LEVEL: 200 PPM
PAGE 3 OF 4

ANIMAL NUMBERS	21	22	23	24	25	26	27	28	29	30	COMMENTS/SUMMARY
CAGESIDE OBSERVATION											
HOME CAGE ACTIVITY	A	0	A	0	0	0	S	A	0	0	
FECES AMOUNT	0	0	0	0	0	0	0	0	0	0	
FECES COLOR	0	0	0	0	0	0	0	0	0	0	
FECES CONSISTENCY	0	0	0	0	0	0	0	0	0	0	
URINE AMOUNT	0	0	0	0	0	0	0	0	0	0	
URINE COLOR	0	0	0	0	0	0	0	0	0	0	
BEHAVIOR FROM CAGE	0	0	0	0	0	0	0	0	4	0	
PHYSICAL EXAMINATION											
DEATH	-	-	-	-	-	-	-	-	-	-	
HAIR COAT	0	0	0	0	0	0	0	0	0	0	
MUCOUS MEMB./EYE/SKIN COLOR	0	0	0	0	0	0	0	0	0	0	
BODY TEMPERATURE	0	0	0	0	0	0	0	0	0	0	
RESPIRATORY RATE	0	0	0	0	0	0	0	0	0	0	
RESPIRATORY CHARACTER	0	0	0	0	0	0	0	0	0	0	
LACRIMATION	0	0	0	0	0	0	0	0	0	0	
SALIVATION AMOUNT	0	0	0	0	0	0	0	0	0	0	
SALIVATION ONSET	-	-	-	-	-	-	-	-	-	-	
EYE PROMINENCE	0	0	0	0	0	0	0	0	0	0	
PALPEBRAL CLOSURE	0	0	0	0	0	0	0	0	0	0	
CONVULSION ONSET	-	-	-	-	-	-	-	-	-	-	
TYPE OF CONVULSION	-	-	-	-	-	-	-	-	-	-	
LENGTH OF SEIZURE	-	-	-	-	-	-	-	-	-	-	
LENGTH OF POST-ICTAL PERIOD	-	-	-	-	-	-	-	-	-	-	
BITING	-	-	-	-	-	-	-	-	-	-	
TREMOR SEVERITY	-	-	-	-	-	-	-	-	-	-	
TREMOR ONSET	-	-	-	-	-	-	-	-	-	-	
HANDLING BEHAVIOR	4	0	0	0	0	0	0	0	8	0	
NEUROLOGICAL EXAMINATION											
LOCOMOTOR ACTIVITY (N=2)	2	2	1	2	2	2	1	2	2	1	
REARING ACTIVITY	2	0	0	0	0	4	0	2	0	0	
TAIL ELEVATION	0	0	0	0	0	0	0	0	0	0	
STATIC LIMB POSITION	0	0	0	0	0	0	0	0	0	0	
ABNORMAL GAIT	-	-	-	-	-	-	-	-	-	-	
HYPOTONIC GAIT - HINDLIMB	0	0	0	0	0	0	0	0	0	0	
HYPOTONIC GAIT - FORELIMB	0	0	0	0	0	0	0	0	0	0	
ATAXIC GAIT	0	0	0	0	0	0	0	0	0	0	
HEAD POSITION	0	0	0	0	0	0	0	0	0	0	
APPROACH RESPONSE (N=1)	0	0	0	1	1	1	0	0	0	0	
TOUCH RESPONSE	C	0	0	R	0	T	0	R	0	0	
AUDITORY ORIENTATION	0	A	A	0	0	0	A	0	A	A	
OLFACTORY ORIENTATION	A	0	A	0	0	0	A	A	A	A	
RIGHTING REFLEX	0	0	0	0	0	0	0	0	0	0	
PROPRIOCEPTIVE POSITIONING	0	0	0	0	0	0	0	0	0	0	
TAIL PINCH (N=A)	T	0	R	*	R	*	R	R	R	R	*Animal jerked tail away.
ABDOMINAL TONE (N=2)	2	2	2	2	2	2	2	2	4	2	
BLADDER TONE	0	0	0	0	0	0	0	0	0	0	
MUSCLE TONE	0	0	0	0	0	0	0	0	0	0	
PASSIVE MANIPULATION	0	0	0	0	0	0	0	0	R	0	
PUPILLARY SIZE	0	0	0	0	0	0	0	0	0	0	
EYE POSITION	0	0	0	0	0	0	0	0	0	0	
NYSTAGMUS - RESTING	0	0	0	0	0	0	0	0	0	0	
NYSTAGMUS - POSITIONAL	0	0	0	0	0	0	0	0	0	0	
VISUAL ORIENTATION	S	P	P	S	S	P	P	S	P	P	
PALPEBRAL REFLEX	0	0	0	0	0	0	0	0	0	0	
PINNA TOUCH RESPONSE (N=2)	0	0	2	2	4	6	2	0	2	0	
EXTENSOR POSTURAL THRUST	0	0	0	0	0	0	0	0	0	0	
HOPPING REFLEX	0	0	0	0	0	0	0	0	0	0	
VISUAL PLACING	0	0	0	0	0	0	0	0	0	0	
GRIP STRENGTH - SEMI-QUANT.	0	0	0	0	0	0	0	0	0	0	
GRIP STRENGTH-QUANT.											
(FORELIMB) 1	400	450	699	468	363	428	628	745	474	599	
2	482	779	748	570	674	361	623	769	680	690	
3	324	790	698	653	571	652	650	701	581	649	
(HINDLIMB) 1	299	362	262	259	608	367	222	437	422	221	
2	320	438	539	799	250	239	369	468	590	322	
3	348	620	681	491	339	420	312	580	970	571	
BIZARRE BEHAVIOR	-	-	-	-	-	-	-	-	-	-	
DEFECATION	3	3	2	0	2	2	3	4	2	4	
URINATION	0	1	0	0	0	1	0	1	0	0	
SPONTANEOUS VOCALIZATIONS	22	1	9	4	3	2	5	3	18	7	

ADDITIONAL COMMENTS:

FUNCTIONAL OBSERVATIONAL BATTERY - INDIVIDUAL DATA

DATE: 4-28-88
STUDY DAY: 10
SPECIES: RAT
SEX: MALE

RECORDER: KEN SHEPARD
OBSERVER: LISA BERNARD
TABLE NO.: 11

STUDY NO.: 880017I1
ACC. NO.: 907124
DOSE LEVEL: 400 PPM
PAGE 4 OF 4

ANIMAL NUMBERS	31	32	33	34	35	36	37	38	39	40	COMMENTS/SUMMARY
CAGESIDE OBSERVATION											
HOME CAGE ACTIVITY	S	A	S	0	A	A	A	0	0	0	
FECES AMOUNT	0	0	0	0	0	0	0	0	0	0	
FECES COLOR	0	0	0	0	0	0	0	0	0	0	
FECES CONSISTENCY	0	0	0	0	0	0	0	0	0	0	
URINE AMOUNT	0	0	0	0	0	0	0	0	0	0	
URINE COLOR	0	0	0	0	0	0	0	0	0	0	
BEHAVIOR FROM CAGE	0	0	0	0	0	0	1	0	0	1	
PHYSICAL EXAMINATION											
DEATH	-	-	-	-	-	-	-	-	-	-	
HAIR COAT	0	0	0	0	0	0	0	0	0	0	
MUCOUS MEMB./EYE/SKIN COLOR	0	0	0	0	0	0	0	0	0	0	
BODY TEMPERATURE	0	0	0	0	0	0	0	0	0	0	
RESPIRATORY RATE	0	0	0	0	0	0	0	0	0	0	
RESPIRATORY CHARACTER	0	0	0	0	0	0	0	0	0	0	
LACRIMATION	0	0	0	0	0	0	0	0	0	0	
SALIVATION AMOUNT	0	0	0	0	0	0	0	0	0	0	
SALIVATION ONSET	-	-	-	-	-	-	-	-	-	-	
EYE PROMINENCE	0	0	0	0	0	0	0	0	0	0	
PALPEBRAL CLOSURE	0	0	0	0	0	0	0	0	0	0	
CONVULSION ONSET	-	-	-	-	-	-	-	-	-	-	
TYPE OF CONVULSION	-	-	-	-	-	-	-	-	-	-	
LENGTH OF SEIZURE	-	-	-	-	-	-	-	-	-	-	
LENGTH OF POST-ICTAL PERIOD	-	-	-	-	-	-	-	-	-	-	
BITING	-	-	-	-	-	-	-	-	-	-	
TREMOR SEVERITY	-	-	-	-	-	-	-	-	-	4	
TREMOR ONSET	-	-	-	-	-	-	-	-	-	R	
HANDLING BEHAVIOR	4	0	0	0	0	0	0	0	0	4	
NEUROLOGICAL EXAMINATION											
LOCOMOTOR ACTIVITY (N=2)	2	2	2	2	2	2	2	2	2	1	
REARING ACTIVITY	2	2	0	0	0	0	0	0	0	0	
TAIL ELEVATION	2	1	0	0	0	0	2	0	0	0	
STATIC LIMB POSITION	0	0	0	0	0	0	0	0	0	0	
ABNORMAL GAIT	-	-	-	-	-	-	-	-	-	-	
HYPOTONIC GAIT - HINDLIMB	0	0	0	0	0	0	0	0	0	0	
HYPOTONIC GAIT - FORELIMB	0	0	0	0	0	0	0	0	0	0	
ATAXIC GAIT	0	0	0	0	0	0	0	0	0	0	
HEAD POSITION	0	0	0	0	0	0	0	0	0	0	
APPROACH RESPONSE (N=1)	0	0	0	1	1	0	1	1	0	1	
TOUCH RESPONSE	R	R	R	R	T	R	0	R	R	0	
AUDITORY ORIENTATION	A	0	A	A	0	A	A	0	A	A	
OLFACTORY ORIENTATION	A	0	A	A	0	A	A	A	0	A	
RIGHTING REFLEX	0	0	0	0	0	0	0	0	0	0	
PROPRIOCEPTIVE POSITIONING	0	0	0	0	0	0	0	0	0	0	
TAIL PINCH (N=A)	R	T	T	*	R	0	R	R	0	R	*Animal jerked tail away
ABDOMINAL TONE (N=2)	2	2	4	2	2	2	2	4	2	4	
BLADDER TONE	0	0	0	0	0	0	0	0	0	0	
MUSCLE TONE	0	0	0	0	0	0	0	0	0	0	
PASSIVE MANIPULATION	0	0	0	0	0	0	0	0	0	0	
PUPILLARY SIZE	0	0	0	0	0	0	0	0	0	0	
EYE POSITION	0	0	0	0	0	0	0	0	0	0	
NYSTAGMUS - RESTING	0	0	0	0	0	0	0	0	0	0	
NYSTAGMUS - POSITIONAL	0	0	0	0	0	0	0	0	0	0	
VISUAL ORIENTATION	P	S	P	P	S	S	0	S	P	S	
PALPEBRAL REFLEX	0	0	0	0	0	0	0	0	0	0	
PINNA TOUCH RESPONSE (N=2)	0	0	4	4	2	2	0	2	0	0	
EXTENSOR POSTURAL THRUST	0	0	0	0	0	0	0	0	0	0	
HOPPING REFLEX	0	0	0	0	0	0	0	0	0	0	
VISUAL PLACING	0	0	0	0	0	0	0	0	0	0	
GRIP STRENGTH - SEMI-QUANT.	0	0	0	0	0	0	0	0	0	0	
GRIP STRENGTH-QUANT.											
(FORELIMB) 1	647	396	371	690	548	422	729	738	661	598	
2	611	595	460	504	653	719	441	718	502	645	
3	598	611	352	686	628	759	216	449	463	645	
(HINDLIMB) 1	499	416	378	708	293	528	712	322	429	664	
2	378	661	255	411	280	530	570	402	493	551	
3	615	308	296	574	598	671	308	344	500	322	
BIZARRE BEHAVIOR	-	-	-	-	-	-	-	-	-	-	
DEFECATION	0	5	4	0	0	0	2	0	5	2	
URINATION	0	1	1	0	0	0	1	0	1	1	
SPONTANEOUS VOCALIZATIONS	17	2	5	3	1	2	6	3	4	28	

ADDITIONAL COMMENTS:

3542T

FUNCTIONAL OBSERVATIONAL BATTERY - INDIVIDUAL DATA

DATE: 5-20-88
STUDY DAY: 32
SPECIES: RAT
SEX: MALE

RECORDER: KEN SHEPARD
OBSERVER: LISA BERNARD
TABLE NO.: 12

STUDY NO.: 880017I1
ACC. NO.: 907124
DOSE LEVEL: 0 PPM

MAL NUMBERS	1	2	3	4	5	6	7	8	9	10	COMMENTS/SUMMARY
CAGESIDE OBSERVATION											
HOME CAGE ACTIVITY	A	0	A	S	A	0	0	0	0	A	
FECES AMOUNT	0	0	0	0	0	0	0	0	0	0	
FECES COLOR	0	0	0	0	0	0	0	0	0	0	
FECES CONSISTENCY	0	0	0	0	0	0	0	0	0	0	
URINE AMOUNT	0	0	0	0	0	0	0	0	0	0	
URINE COLOR	0	0	0	0	0	0	0	0	0	0	
BEHAVIOR FROM CAGE	0	0	0	0	0	0	0	0	0	0	
PHYSICAL EXAMINATION											
DEATH	-	-	-	-	-	-	-	-	-	-	
HAIR COAT	0	0	0	0	0	0	0	0	0	0	
MUCOUS MEMB./EYE/SKIN COLOR	0	0	0	0	0	0	0	0	0	0	
BODY TEMPERATURE	0	0	0	0	0	0	0	0	0	0	
RESPIRATORY RATE	0	0	0	0	0	0	0	0	0	0	
RESPIRATORY CHARACTER	0	0	0	0	0	0	0	0	0	0	
LACRIMATION	0	0	0	0	0	0	0	0	0	0	
SALIVATION AMOUNT	0	0	0	0	0	0	0	0	0	0	
SALIVATION ONSET	-	-	-	-	-	-	-	-	-	-	
EYE PROMINENCE	0	0	0	0	0	0	0	0	0	0	
PALPEBRAL CLOSURE	0	0	0	0	0	0	0	0	0	0	
CONVULSION ONSET	-	-	-	-	-	-	-	-	-	-	
TYPE OF CONVULSION	-	-	-	-	-	-	-	-	-	-	
LENGTH OF SEIZURE	-	-	-	-	-	-	-	-	-	-	
LENGTH OF POST-ICTAL PERIOD	-	-	-	-	-	-	-	-	-	-	
BITING	-	-	-	-	-	-	-	-	-	-	
TREMOR SEVERITY	-	-	-	-	-	-	-	-	-	-	
TREMOR ONSET	-	-	-	-	-	-	-	-	-	-	
HANDLING BEHAVIOR	0	0	0	0	0	0	0	0	0	4	
NEUROLOGICAL EXAMINATION											
LOCOMOTOR ACTIVITY (N=2)	2	2	1	1	2	1	1	2	1	2	
REARING ACTIVITY	0	0	0	0	0	0	0	0	0	0	
TAIL ELEVATION	0	0	2	2	0	0	0	0	0	0	
STATIC LIMB POSITION	0	0	0	0	0	0	0	0	0	0	
ABNORMAL GAIT	-	-	-	-	-	-	-	-	-	-	
HYPOTONIC GAIT - HINDLIMB	0	0	0	0	0	0	0	0	0	0	
HYPOTONIC GAIT - FORELIMB	0	0	0	0	0	0	0	0	0	0	
ATAXIC GAIT	0	0	0	0	0	0	0	0	0	0	
HEAD POSITION	0	0	0	0	0	0	0	0	0	0	
APPROACH RESPONSE (N=1)	1	0	1	0	1	0	1	0	0	0	
TOUCH RESPONSE	T	R	R	T	T	0	R	R	0	0	
AUDITORY ORIENTATION	0	A	A	0	A	A	A	0	A	A	
OLFACTORY ORIENTATION	0	A	0	0	A	A	0	A	A	A	
RIGHTING REFLEX	0	0	0	0	0	0	0	0	0	0	
PROPRIOCEPTIVE POSITIONING	0	0	0	0	0	0	0	0	0	0	
TAIL PINCH (N=A)	T	R	A	T	0	0	A	R	R	R	
ABDOMINAL TONE (N=2)	2	2	2	2	2	2	2	2	2	2	
BLADDER TONE	0	0	0	0	0	0	0	0	0	0	
MUSCLE TONE	0	0	0	0	0	0	0	0	0	0	
PASSIVE MANIPULATION	0	0	0	0	0	0	0	0	0	R	
PUPILLARY SIZE	0	0	0	0	0	0	0	0	0	0	
EYE POSITION	0	0	0	0	0	0	0	0	0	0	
NYSTAGMUS - RESTING	0	0	0	0	0	0	0	0	0	0	
NYSTAGMUS - POSITIONAL	0	0	0	0	0	0	0	0	0	0	
VISUAL ORIENTATION	S	P	S	S	P	S	S	P	S	P	
PALPEBRAL REFLEX	0	0	0	0	0	0	0	0	0	0	
PINNA TOUCH RESPONSE (N=2)	4	4	2	0	2	4	2	4	0	0	
EXTENSOR POSTURAL THRUST	0	0	0	0	0	0	0	0	0	0	
HOPPING REFLEX	0	0	0	0	0	0	0	0	0	0	
VISUAL PLACING	0	0	0	0	0	0	0	0	0	0	
GRIP STRENGTH - SEMI-QUANT.	0	0	0	0	0	0	0	0	0	0	
GRIP STRENGTH-QUANT.											
(FOREL-IMB) 1	685	651	668	671	668	704	611	679	696	681	
2	699	662	681	661	600	608	501	679	699	561	
3	689	658	683	669	688	693	539	541	701	682	
(HINDLIMB) 1	502	410	748	510	548	480	410	659	748	500	
2	334	648	481	452	835	540	530	641	959	918	
3	788	602	338	428	464	700	612	880	1118	887	
BIZARRE BEHAVIOR	-	-	-	-	-	-	-	-	-	-	
DEFECATION	2	0	5	0	1	0	3	0	0	0	
URINATION	0	1	1	1	0	0	1	2	1	0	
SPONTANEOUS VOCALIZATIONS	3	4	2	2	4	5	4	6	6	14	

ADDITIONAL COMMENTS: Rat #9 - Alopecia on both forepaws.

FUNCTIONAL OBSERVATIONAL BATTERY - INDIVIDUAL DATA

DATE: 5-20-88
STUDY DAY: 32
SPECIES: RAT
SEX: MALE

RECORDER: KEN SHEPARD
OBSERVER: LISA BERNARD
TABLE NO.: 12

STUDY NO.: 880017I1
ACC. NO.: 907124
DOSE LEVEL: 100 PPM
PAGE 2 OF 4

MAL NUMBERS	11	12	13	14	15	16	17	18	19	20	COMMENTS/SUMMARY
CAGESIDE OBSERVATION											
HOME CAGE ACTIVITY	A	0	S	A	S	0	S	0	A	A	
FECES AMOUNT	0	0	0	0	0	0	0	0	0	0	
FECES COLOR	0	0	0	0	0	0	0	0	0	0	
FECES CONSISTENCY	0	0	0	0	0	0	0	0	0	0	
URINE AMOUNT	0	0	0	0	0	0	0	0	0	0	
URINE COLOR	0	0	0	0	0	0	0	0	0	0	
BEHAVIOR FROM CAGE	0	0	0	0	0	0	0	0	0	0	
PHYSICAL EXAMINATION											
DEATH	-	-	-	-	-	-	-	-	-	-	
HAIR COAT	0	0	0	0	0	0	0	0	0	0	
MUCOUS MEMB./EYE/SKIN COLOR	0	0	0	0	0	0	0	0	0	0	
BODY TEMPERATURE	0	0	0	0	0	0	0	0	0	0	
RESPIRATORY RATE	0	0	0	0	0	0	0	0	0	0	
RESPIRATORY CHARACTER	0	0	0	0	0	0	0	0	0	0	
LACRIMATION	0	0	0	0	0	0	0	0	0	0	
SALIVATION AMOUNT	0	0	0	0	0	0	0	0	0	0	
SALIVATION ONSET	-	-	-	-	-	-	-	-	-	-	
EYE PROMINENCE	0	0	0	0	0	0	0	0	0	0	
PALPEBRAL CLOSURE	0	0	0	0	0	0	0	0	0	0	
CONVULSION ONSET	-	-	-	-	-	-	-	-	-	-	
TYPE OF CONVULSION	-	-	-	-	-	-	-	-	-	-	
LENGTH OF SEIZURE	-	-	-	-	-	-	-	-	-	-	
LENGTH OF POST-ICTAL PERIOD	-	-	-	-	-	-	-	-	-	-	
BITING	-	-	-	-	-	-	-	-	-	-	
TREMOR SEVERITY	-	-	-	-	-	-	-	-	-	-	
TREMOR ONSET	-	-	-	-	-	-	-	-	-	-	
HANDLING BEHAVIOR	0	4	4	0	0	0	0	4	0	0	
NEUROLOGICAL EXAMINATION											
LOCOMOTOR ACTIVITY (N=2)	2	2	2	2	1	1	2	2	2	2	
REARING ACTIVITY	0	0	0	0	0	0	0	0	0	0	
TAIL ELEVATION	0	0	0	0	2	0	0	0	0	0	
STATIC LIMB POSITION	0	0	0	0	0	0	0	0	0	0	
ABNORMAL GAIT	-	-	-	-	-	-	-	-	-	-	
HYPOTONIC GAIT - HINDLIMB	0	0	0	0	0	0	0	0	0	0	
HYPOTONIC GAIT - FORELIMB	0	0	0	0	0	0	0	0	0	0	
ATAXIC GAIT	0	0	0	0	0	0	0	0	0	0	
HEAD POSITION	0	0	0	0	0	0	0	0	0	0	
APPROACH RESPONSE (N=1)	1	0	0	0	0	0	1	0	0	0	
TOUCH RESPONSE	T	A	0	0	R	0	0	R	0	R	
AUDITORY ORIENTATION	0	A	A	A	A	A	0	0	0	A	
OLFACTORY ORIENTATION	A	A	A	A	A	A	0	0	A	0	
RIGHTING REFLEX	0	0	0	0	0	0	0	0	0	0	
PROPRIOCEPTIVE POSITIONING	0	0	0	0	0	0	0	0	0	0	
TAIL PINCH (N=A)	R	R	R	A	T	R	0	R	R	A	
ABDOMINAL TONE (N=2)	2	2	2	2	2	2	2	2	2	2	
BLADDER TONE	0	0	0	0	0	0	0	0	0	0	
MUSCLE TONE	0	0	0	0	0	0	0	0	0	0	
PASSIVE MANIPULATION	0	0	0	0	0	0	0	0	0	0	
PUPILLARY SIZE	0	0	0	0	0	0	0	0	0	0	
EYE POSITION	0	0	0	0	0	0	0	0	0	0	
NYSTAGMUS - RESTING	0	0	0	0	0	0	0	0	0	0	
NYSTAGMUS - POSITIONAL	0	0	0	0	0	0	0	0	0	0	
VISUAL ORIENTATION	P	S	0	P	P	P	P	0	S	S	
PALPEBRAL REFLEX	0	0	0	0	0	0	0	0	0	0	
PINNA TOUCH RESPONSE (N=2)	0	0	0	0	0	0	0	4	0	2	
EXTENSOR POSTURAL THRUST	0	0	0	0	0	0	0	0	0	0	
HOPPING REFLEX	0	0	0	0	0	0	0	0	0	0	
VISUAL PLACING	0	0	0	0	0	0	0	0	0	0	
GRIP STRENGTH - SEMI-QUANT.	0	0	0	0	0	0	0	0	0	0	
GRIP STRENGTH-QUANT.											
(FORELIMB) 1	661	683	661	695	669	707	689	687	692	704	
2	491	605	453	638	663	680	655	652	680	679	
3	659	689	662	699	662	660	600	660	692	589	
(HINDLIMB) 1	828	374	572	587	672	762	735	963	586	892	
2	618	542	819	359	415	651	519	322	659	418	
3	919	322	741	748	988	787	989	568	992	631	
BIZARRE BEHAVIOR	-	-	-	-	-	-	-	-	-	-	
DEFECATION	0	0	0	0	1	1	3	3	2	3	
URINATION	0	1	1	0	0	0	1	1	0	2	
SPONTANEOUS VOCALIZATIONS	3	21	16	3	6	2	2	7	4	3	

ADDITIONAL COMMENTS:

3646T

FUNCTIONAL OBSERVATIONAL BATTERY - INDIVIDUAL DATA

DATE: 5-20-88
STUDY DAY: 32
SPECIES: RAT
SEX: MALE

RECORDER: KEN SHEPARD
OBSERVER: LISA BERNARD
TABLE NO.: 12

STUDY NO.: 88001711
ACC. NO.: 907124
DOSE LEVEL: 200 PPM
PAGE 3 OF 4

MAL NUMBERS	21	22	23	24	25	26	27	28	29	30	COMMENTS/SUMMARY
CAGESIDE OBSERVATION											
HOME CAGE ACTIVITY	A	A	A	0	A	0	0	A	A	S	
FECES AMOUNT	0	0	0	0	0	0	0	0	0	0	
FECES COLOR	0	0	0	0	0	0	0	0	0	0	
FECES CONSISTENCY	0	0	0	0	0	0	0	0	0	0	
URINE AMOUNT	0	0	0	0	0	0	0	0	0	0	
URINE COLOR	0	0	0	0	0	0	0	0	0	0	
BEHAVIOR FROM CAGE	0	0	0	0	0	0	0	0	0	0	
PHYSICAL EXAMINATION											
DEATH	-	-	-	-	-	-	-	-	-	-	
HAIR COAT	0	0	0	0	0	0	0	0	0	0	
MUCOUS MEMB./EYE/SKIN COLOR	0	0	0	0	0	0	0	0	0	0	
BODY TEMPERATURE	0	0	0	0	0	0	0	0	0	0	
RESPIRATORY RATE	0	0	0	0	0	0	0	0	0	0	
RESPIRATORY CHARACTER	0	0	0	0	0	0	0	0	0	0	
LACRIMATION	0	0	0	0	0	0	0	0	0	0	
SALIVATION AMOUNT	0	0	0	0	0	0	0	0	0	0	
SALIVATION ONSET	-	-	-	-	-	-	-	-	-	-	
EYE PROMINENCE	0	0	0	0	0	0	0	0	0	0	
PALPEBRAL CLOSURE	0	0	0	0	0	0	0	0	0	0	
CONVULSION ONSET	-	-	-	-	-	-	-	-	-	-	
TYPE OF CONVULSION	-	-	-	-	-	-	-	-	-	-	
LENGTH OF SEIZURE	-	-	-	-	-	-	-	-	-	-	
LENGTH OF POST-ICTAL PERIOD	-	-	-	-	-	-	-	-	-	-	
BITING	-	-	-	-	-	-	-	-	-	-	
TREMOR SEVERITY	-	-	-	-	-	-	-	-	-	-	
TREMOR ONSET	-	-	-	-	-	-	-	-	-	-	
HANDLING BEHAVIOR	4	0	0	0	0	0	4	0	8	4	
NEUROLOGICAL EXAMINATION											
LOCOMOTOR ACTIVITY (N=2)	2	2	2	1	1	2	1	2	2	1	
REARING ACTIVITY	0	0	0	0	0	0	0	0	0	0	
TAIL ELEVATION	0	0	0	2	2	0	0	0	0	0	
STATIC LIMB POSITION	0	0	0	0	0	0	0	0	0	0	
ABNORMAL GAIT	-	-	-	-	-	-	-	-	-	-	
HYPOTONIC GAIT - HINDLIMB	0	0	0	0	0	0	0	0	0	0	
HYPOTONIC GAIT - FORELIMB	0	0	0	0	0	0	0	0	0	0	
ATAXIC GAIT	0	0	0	0	0	0	0	0	0	0	
HEAD POSITION	0	0	0	0	0	0	0	0	0	0	
APPROACH RESPONSE (N=1)	0	0	0	0	1	0	0	0	1	0	
TOUCH RESPONSE	0	R	0	0	R	0	0	0	R	T	
AUDITORY ORIENTATION	A	A	A	A	0	A	A	A	A	A	
OLFACTORY ORIENTATION	A	0	A	A	0	A	A	A	A	A	
RIGHTING REFLEX	0	0	0	0	0	0	0	0	0	0	
PROPRIOCEPTIVE POSITIONING	0	0	0	0	0	0	0	0	0	0	
TAIL PINCH (N=A)	R	*	0	R	R	T	*	T	0	A	*Animal pulled tail away.
ABDOMINAL TONE (N=2)	2	2	2	2	2	2	2	2	2	2	
BLADDER TONE	0	0	0	0	0	0	0	0	0	0	
MUSCLE TONE	0	0	0	0	0	0	0	0	0	0	
PASSIVE MANIPULATION	0	0	0	0	0	0	0	0	0	0	
PUPILLARY SIZE	0	0	0	0	0	0	0	0	0	0	
EYE POSITION	0	0	0	0	0	0	0	0	0	0	
NYSTAGMUS - RESTING	0	0	0	0	0	0	0	0	0	0	
NYSTAGMUS - POSITIONAL	0	0	0	0	0	0	0	0	0	0	
VISUAL ORIENTATION	P	P	P	P	S	P	P	P	P	P	
PALPEBRAL REFLEX	0	0	0	0	0	0	0	0	0	0	
PINNA TOUCH RESPONSE (N=2)	0	0	2	0	0	2	2	0	0	0	
EXTENSOR POSTURAL THRUST	0	0	0	0	0	0	0	0	0	0	
HOPPING REFLEX	0	0	0	0	0	0	0	0	0	0	
VISUAL PLACING	0	0	0	0	0	0	0	0	0	0	
GRIP STRENGTH - SEMI-QUANT.	0	0	0	0	0	0	0	0	0	0	
GRIP STRENGTH-QUANT.											
(FORELIMB) 1	661	769	661	662	700	670	662	700	735	662	
2	546	691	663	671	672	370	661	707	692	660	
3	710	708	679	668	732	725	663	698	689	560	
(HINDLIMB) 1	489	692	526	762	589	552	391	851	818	530	
2	352	458	572	982	370	515	439	792	889	501	
3	382	421	689	700	500	938	521	574	1109	572	
BIZARRE BEHAVIOR	-	-	-	-	-	-	-	-	-	-	
DEFECATION	0	3	2	3	0	0	0	5	3	2	
URINATION	0	0	1	1	1	1	0	1	0	0	
SPONTANEOUS VOCALIZATIONS	14	3	6	7	2	3	12	4	11	14	

ADDITIONAL COMMENTS:

FUNCTIONAL OBSERVATIONAL BATTERY - INDIVIDUAL DATA

DATE: 5-20-88
STUDY DAY: 32
SPECIES: RAT
SEX: MALE

RECORDER: KEN SHEPARD
OBSERVER: LISA BERNARD
TABLE NO.: 12

STUDY NO.: 880017I1
ACC. NO.: 907124
DOSE LEVEL: 400 PPM
PAGE 4 OF 4

ANIMAL NUMBERS	31	32	33	34	35	36	37	38	39	40	COMMENTS/SUMMARY
CAGESIDE OBSERVATION											
HOME CAGE ACTIVITY	A	A	0	S	A	0	A	A	0	A	
FECES AMOUNT	0	0	0	0	0	0	0	0	0	0	
FECES COLOR	0	0	0	0	0	0	0	0	0	0	
FECES CONSISTENCY	0	0	0	0	0	0	0	0	0	0	
URINE AMOUNT	0	0	0	0	0	0	0	0	0	0	
URINE COLOR	0	0	0	0	0	0	0	0	0	0	
BEHAVIOR FROM CAGE	0	0	0	0	0	0	0	0	0	1	
PHYSICAL EXAMINATION											
DEATH	-	-	-	-	-	-	-	-	-	-	
HAIR COAT	0	0	0	0	0	0	0	0	0	0	
MUCOUS MEMB./EYE/SKIN COLOR	0	0	0	0	0	0	0	0	0	0	
BODY TEMPERATURE	0	0	0	0	0	0	0	0	0	0	
RESPIRATORY RATE	0	0	0	0	0	0	0	0	0	0	
RESPIRATORY CHARACTER	0	0	0	0	0	0	0	0	0	0	
LACRIMATION	0	0	0	0	0	0	0	0	0	0	
SALIVATION AMOUNT	0	0	0	0	0	0	0	0	0	0	
SALIVATION ONSET	-	-	-	-	-	-	-	-	-	-	
EYE PROMINENCE	0	0	0	0	0	0	0	0	0	0	
PALPEBRAL CLOSURE	0	0	0	0	0	0	0	0	0	0	
CONVULSION ONSET	-	-	-	-	-	-	-	-	-	-	
TYPE OF CONVULSION	-	-	-	-	-	-	-	-	-	-	
LENGTH OF SEIZURE	-	-	-	-	-	-	-	-	-	-	
LENGTH OF POST-ICTAL PERIOD	-	-	-	-	-	-	-	-	-	-	
BITING	-	-	-	-	-	-	-	-	-	-	
TREMOR SEVERITY	-	-	-	-	-	-	-	-	-	-	
TREMOR ONSET	-	-	-	-	-	-	-	-	-	-	
HANDLING BEHAVIOR	0	0	0	0	0	0	0	0	0	8	
NEUROLOGICAL EXAMINATION											
LOCOMOTOR ACTIVITY (N=2)	2	2	2	2	2	2	2	2	2	1	
REARING ACTIVITY	0	0	0	0	0	0	0	0	0	0	
TAIL ELEVATION	0	0	0	0	0	0	2	0	0	0	
STATIC LIMB POSITION	0	0	0	0	0	0	0	0	0	0	
ABNORMAL GAIT	-	-	-	-	-	-	-	-	-	-	
HYPOTONIC GAIT - HINDLIMB	0	0	0	0	0	0	0	0	0	0	
HYPOTONIC GAIT - FORELIMB	0	0	0	0	0	0	0	0	0	0	
ATAXIC GAIT	0	0	0	0	0	0	0	0	0	0	
HEAD POSITION	0	0	0	0	0	0	0	0	0	0	
APPROACH RESPONSE (N=1)	0	0	0	0	0	0	0	0	4	4	
TOUCH RESPONSE	R	0	0	R	0	T	T	0	0	R	
AUDITORY ORIENTATION	A	0	0	A	A	0	A	A	A	A	
OLFACTORY ORIENTATION	A	0	0	0	A	0	0	A	0	0	
RIGHTING REFLEX	0	0	0	0	0	0	0	0	0	0	
PROPRIOCEPTIVE POSITIONING	0	0	0	0	0	0	0	0	0	0	
TAIL PINCH (N=A)	A	R	0	0	T	T	*	T	0	T	*Pulled tail away.
ABDOMINAL TONE (N=2)	2	2	2	2	2	2	2	2	2	2	
BLADDER TONE	0	0	0	0	0	0	0	0	0	0	
MUSCLE TONE	0	0	0	0	0	0	0	0	0	0	
PASSIVE MANIPULATION	0	0	0	0	0	0	0	0	0	0	
PUPILLARY SIZE	0	0	0	0	0	0	0	0	0	0	
EYE POSITION	0	0	0	0	0	0	0	0	0	0	
NYSTAGMUS - RESTING	0	0	0	0	0	0	0	0	0	0	
NYSTAGMUS - POSITIONAL	0	0	0	0	0	0	0	0	0	0	
VISUAL ORIENTATION	P	P	S	P	S	0	P	P	P	P	
PALPEBRAL REFLEX	0	0	0	0	0	0	0	0	0	0	
PINNA TOUCH RESPONSE (N=2)	0	2	2	0	0	2	0	2	2	2	
EXTENSOR POSTURAL THRUST	0	0	0	0	0	0	0	0	0	0	
HOPPING REFLEX	0	0	0	0	0	0	0	0	0	0	
VISUAL PLACING	0	0	0	0	0	0	0	0	0	0	
GRIP STRENGTH - SEMI-QUANT.	0	0	0	0	0	0	0	0	0	0	
GRIP STRENGTH-QUANT.											
(FORELIMB) 1	434	671	685	688	692	689	665	548	707	722	
2	513	711	684	670	671	659	685	592	725	662	
3	669	666	691	660	741	673	578	493	704	698	
(HINDLIMB) 1	279	650	298	960	540	691	574	601	439	738	
2	461	637	581	370	648	439	508	500	498	763	
3	429	962	522	551	610	800	499	616	577	990	
BIZARRE BEHAVIOR	-	-	-	-	-	-	-	-	-	-	
DEFECATION	0	2	3	5	0	0	3	0	0	4	
URINATION	0	1	0	0	0	0	1	0	0	2	
SPONTANEOUS VOCALIZATIONS	8	4	3	4	3	5	2	4	2	14	

ADDITIONAL COMMENTS: Rat #32 - Alopecia on face, neck and shoulders.
Rat #40 - Alopecia on right shoulder.
Rat #36 - Alopecia on forepaws.
Rat #34 - Alopecia on shoulder.

FUNCTIONAL OBSERVATIONAL BATTERY - INDIVIDUAL DATA

DATE: 6-17-88
STUDY DAY: 60
SPECIES: RAT
SEX: MALE

RECORDER: KEN SHEPARD
OBSERVER: LISA BERNARD
TABLE NO.: 13

STUDY NO.: 880017I1
ACC. NO.: 907124
DOSE LEVEL: 0 PPM
PAGE 1 OF 4

ANIMAL NUMBERS	1	2	3	4	5	6	7	8	9	10	COMMENTS/SUMMARY
CAGESIDE OBSERVATION											
HOME CAGE ACTIVITY	A	S	A	0	A	0	S	0	A	S	
FECES AMOUNT	0	0	0	0	0	0	0	0	0	0	
FECES COLOR	0	0	0	0	0	0	0	0	0	0	
FECES CONSISTENCY	0	0	0	0	0	0	0	0	0	0	
URINE AMOUNT	0	0	0	0	0	0	0	0	0	0	
URINE COLOR	0	0	0	0	0	0	0	0	0	0	
BEHAVIOR FROM CAGE	0	0	0	0	0	0	0	0	0	0	
PHYSICAL EXAMINATION											
DEATH	-	-	-	-	-	-	-	-	-	-	
HAIR COAT	0	0	0	0	0	0	0	0	0	0	
MUCOUS MEMB./EYE/SKIN COLOR	0	0	0	0	0	0	0	0	0	0	
BODY TEMPERATURE	0	0	0	0	0	0	0	0	0	0	
RESPIRATORY RATE	0	0	0	0	0	0	0	0	0	0	
RESPIRATORY CHARACTER	0	0	0	0	0	0	0	0	0	0	
LACRIMATION	0	0	0	0	0	0	0	0	0	0	
SALIVATION AMOUNT	0	0	0	0	0	0	0	0	0	0	
SALIVATION ONSET	-	-	-	-	-	-	-	-	-	-	
EYE PROMINENCE	0	0	0	0	0	0	0	0	0	0	
PALPEBRAL CLOSURE	0	0	0	0	0	0	0	0	0	0	
CONVULSION ONSET	-	-	-	-	-	-	-	-	-	-	
TYPE OF CONVULSION	-	-	-	-	-	-	-	-	-	-	
LENGTH OF SEIZURE	-	-	-	-	-	-	-	-	-	-	
LENGTH OF POST-ICTAL PERIOD	-	-	-	-	-	-	-	-	-	-	
BITING	-	-	-	-	-	-	-	-	-	-	
TREMOR SEVERITY	-	-	-	-	-	-	-	-	-	-	
TREMOR ONSET	-	-	-	-	-	-	-	-	-	-	
HANDLING BEHAVIOR	0	0	0	0	0	0	0	0	0	0	
NEUROLOGICAL EXAMINATION											
LOCOMOTOR ACTIVITY (N=2)	2	2	1	2	1	2	2	2	2	2	
REARING ACTIVITY	0	0	0	2	0	0	0	0	0	0	
TAIL ELEVATION	0	0	2	0	0	0	0	0	0	0	
STATIC LIMB POSITION	0	0	0	0	0	0	0	0	0	0	
ABNORMAL GAIT	-	-	-	-	-	-	-	-	-	-	
HYPOTONIC GAIT - HINDLIMB	0	0	0	0	0	0	0	0	0	0	
HYPOTONIC GAIT - FORELIMB	0	0	0	0	0	0	0	0	0	0	
ATAXIC GAIT	0	0	0	0	0	0	0	0	0	0	
HEAD POSITION	0	0	0	0	0	0	0	0	0	0	
APPROACH RESPONSE (N=1)	1	0	1	0	0	1	1	1	1	0	
TOUCH RESPONSE	T	R	R	R	R	0	0	T	R	T	
AUDITORY ORIENTATION	0	A	A	A	A	A	0	0	A	0	
OLFACTORY ORIENTATION	0	A	0	A	A	0	A	0	A	A	
RIGHTING REFLEX	0	0	0	0	0	0	0	0	0	0	
PROPRIOCEPTIVE POSITIONING	0	0	0	0	0	0	0	0	0	0	
TAIL PINCH (N=A)	R	R	R	T	R	R	0	R	R	R	
ABDOMINAL TONE (N=2)	4	4	2	2	2	2	2	2	2	2	
BLADDER TONE	0	0	0	0	0	0	0	0	0	0	
MUSCLE TONE	0	T	0	0	0	0	0	0	0	0	
PASSIVE MANIPULATION	0	R	0	0	0	0	0	0	0	0	
PUPILLARY SIZE	0	0	0	0	0	0	0	0	0	0	
EYE POSITION	0	0	0	0	0	0	0	0	0	0	
NYSTAGMUS - RESTING	0	0	0	0	0	0	0	0	0	0	
NYSTAGMUS - POSITIONAL	0	0	0	0	0	0	0	0	0	0	
VISUAL ORIENTATION	P	P	P	P	P	P	P	S	P	P	
PALPEBRAL REFLEX	0	0	0	0	0	0	0	0	0	0	
PINNA TOUCH RESPONSE (N=2)	2	0	4	0	0	2	0	0	0	2	
EXTENSOR POSTURAL THRUST	0	0	0	0	0	0	0	0	0	0	
HOPPING REFLEX	0	0	0	0	0	0	0	0	0	0	
VISUAL PLACING	0	0	0	0	0	0	0	0	0	0	
GRIP STRENGTH - SEMI-QUANT.	0	0	0	0	0	0	0	0	0	0	
GRIP STRENGTH-QUANT.											
(FORELIMB) 1	602	614	600	668	622	661	619	664	691	691	
2	600	615	615	670	632	669	611	671	688	668	
3	604	615	594	681	648	662	701	662	696	661	
(HINDLIMB) 1	801	803	804	678	1230	542	712	880	780	1027	
2	737	878	643	649	678	617	433	890	622	650	
3	478	762	912	678	809	557	832	673	1052	1042	
BIZARRE BEHAVIOR	-	-	-	-	-	-	-	-	-	-	
DEFECATION	1	2	5	0	0	0	0	0	0	0	
URINATION	0	2	1	0	0	0	0	0	1	0	
SPONTANEOUS VOCALIZATIONS	8	3	5	4	3	6	7	2	3	4	

ADDITIONAL COMMENTS: Rat #7 - Alopecia on forepaws.
Rat #6 - Porphyrin nasal discharge.
Rat #9 - Alopecia of forepaws and hindpaws.
Rat #5 - Grip strength of 1230 was maximum limit on gauge.

FUNCTIONAL OBSERVATIONAL BATTERY - INDIVIDUAL DATA

DATE: 6-17-88
STUDY DAY: 60
SPECIES: RAT
SEX: MALE

RECORDER: KEN SHEPARD
OBSERVER: LISA BERNARD
TABLE NO.: 13

STUDY NO.: 880017I1
ACC. NO.: 907124
DOSE LEVEL: 100 PPM
PAGE 2 OF 4

MAL NUMBERS	11	12	13	14	15	16	17	18	19	20	COMMENTS/SUMMARY
CAGESIDE OBSERVATION											
HOME CAGE ACTIVITY	0	0	0	A	S	A	A	0	0	A	
FECES AMOUNT	0	0	0	0	0	0	0	0	0	0	
FECES COLOR	0	0	0	0	0	0	0	0	0	0	
FECES CONSISTENCY	0	0	0	0	0	0	0	0	0	0	
URINE AMOUNT	0	0	0	0	0	0	0	0	0	0	
URINE COLOR	0	0	0	0	0	0	0	0	0	0	
BEHAVIOR FROM CAGE	0	0	0	0	0	0	0	1	0	0	
PHYSICAL EXAMINATION											
DEATH	-	-	-	-	-	-	-	-	-	-	
HAIR COAT	0	0	0	0	0	0	0	0	0	0	
MUCOUS MEMB./EYE/SKIN COLOR	0	0	0	0	0	0	0	0	0	0	
BODY TEMPERATURE	0	0	0	0	0	0	0	0	0	0	
RESPIRATORY RATE	0	0	0	0	0	0	0	0	0	0	
RESPIRATORY CHARACTER	0	0	0	0	0	0	0	0	0	0	
LACRIMATION	0	0	0	0	0	0	0	0	0	0	
SALIVATION AMOUNT	0	0	0	0	0	0	0	0	0	0	
SALIVATION ONSET	-	-	-	-	-	-	-	-	-	-	
EYE PROMINENCE	0	0	0	0	0	0	0	0	0	0	
PALPEBRAL CLOSURE	0	0	0	0	0	0	0	0	0	0	
CONVULSION ONSET	-	-	-	-	-	-	-	-	-	-	
TYPE OF CONVULSION	-	-	-	-	-	-	-	-	-	-	
LENGTH OF SEIZURE	-	-	-	-	-	-	-	-	-	-	
LENGTH OF POST-ICTAL PERIOD	-	-	-	-	-	-	-	-	-	-	
BITING	-	-	-	-	-	-	-	-	-	-	
TREMOR SEVERITY	-	-	-	-	-	-	-	-	-	-	
TREMOR ONSET	-	-	-	-	-	-	-	-	-	-	
HANDLING BEHAVIOR	0	4	8	0	0	0	0	0	0	0	
NEUROLOGICAL EXAMINATION											
LOCOMOTOR ACTIVITY (N=2)	2	2	2	0	1	1	2	1	2	2	
REARING ACTIVITY	0	0	0	0	0	0	0	0	0	0	
TAIL ELEVATION	0	0	0	2	2	0	0	0	0	1	
STATIC LIMB POSITION	0	0	0	0	0	0	0	0	0	0	
ABNORMAL GAIT	-	-	-	-	-	-	-	-	-	-	
HYPOTONIC GAIT - HINDLIMB	0	0	0	0	0	0	0	0	0	0	
HYPOTONIC GAIT - FORELIMB	0	0	0	0	0	0	0	0	0	0	
ATAXIC GAIT	0	0	0	0	0	0	0	0	0	0	
HEAD POSITION	0	0	0	0	0	0	0	0	0	0	
APPROACH RESPONSE (N=1)	1	0	0	0	0	1	1	0	0	1	
TOUCH RESPONSE	R	T	T	0	0	0	0	0	R	T	
AUDITORY ORIENTATION	A	A	A	A	A	A	A	A	A	0	
OLFACTORY ORIENTATION	A	A	0	A	A	A	A	A	A	A	
RIGHTING REFLEX	0	0	0	0	0	0	0	0	0	0	
PROPRIOCEPTIVE POSITIONING	0	0	0	0	0	0	0	0	0	0	
TAIL PINCH (N=A)	R	0	E	R	R	A	0	T	R	R	
ABDOMINAL TONE (N=2)	2	2	2	2	4	2	2	2	2	2	
BLADDER TONE	0	0	0	0	0	0	0	0	0	0	
MUSCLE TONE	0	0	0	0	0	0	0	0	0	0	
PASSIVE MANIPULATION	0	R	0	0	0	0	0	0	0	0	
PUPILLARY SIZE	0	0	0	0	0	0	0	0	0	0	
EYE POSITION	0	0	0	0	0	0	0	0	0	0	
NYSTAGMUS - RESTING	0	0	0	0	0	0	0	0	0	0	
NYSTAGMUS - POSITIONAL	0	0	0	0	0	0	0	0	0	0	
VISUAL ORIENTATION	P	P	P	P	P	P	P	P	P	P	
PALPEBRAL REFLEX	0	0	0	0	0	0	0	0	0	0	
PINNA TOUCH RESPONSE (N=2)	0	0	4	0	0	0	0	4	0	0	
EXTENSOR POSTURAL THRUST	0	0	0	0	0	0	0	0	0	0	
HOPPING REFLEX	0	0	0	0	0	0	0	0	0	0	
VISUAL PLACING	0	0	0	0	0	0	0	0	0	0	
GRIP STRENGTH - SEMI-QUANT.	0	0	0	0	0	0	0	0	0	0	
GRIP STRENGTH-QUANT.											
(FORELIMB) 1	605	685	599	671	644	677	601	621	678	542	
2	611	664	599	598	640	679	599	648	662	601	
3	621	712	621	679	668	679	608	595	680	591	
(HINDLIMB) 1	920	576	261	1040	910	569	448	621	335	472	
2	855	1001	1102	719	1053	542	818	537	1183	391	
3	325	1051	841	537	710	501	940	928	1230	494	
BIZARRE BEHAVIOR	-	-	-	-	-	-	-	-	-	-	
DEFECATION	0	3	7	3	2	1	0	3	2	4	
URINATION	0	0	1	1	0	0	0	1	0	1	
SPONTANEOUS VOCALIZATIONS	4	22	36	2	7	3	5	6	2	3	

ADDITIONAL COMMENTS: Rat #19 - Grip strength of 1230 was maximum limit on gauge.

FUNCTIONAL OBSERVATIONAL BATTERY - INDIVIDUAL DATA

DATE: 6-17-88
STUDY DAY: 60
SPECIES: RAT
SEX: MALE

RECORDER: KEN SHEPARD
OBSERVER: LISA BERNARD
TABLE NO.: 13

STUDY NO.: 880017I1
ACC. NO.: 907124
DOSE LEVEL: 200 PPM
PAGE 3 OF 4

ANIMAL NUMBERS	21	22	23	24	25	26	27	28	29	30	COMMENTS/SUMMARY
CAGESIDE OBSERVATION											
HOME CAGE ACTIVITY	A	A	A	S	0	A	0	0	A	0	
FECES AMOUNT	0	0	0	0	0	0	0	0	0	0	
FECES COLOR	0	0	0	0	0	0	0	0	0	0	
FECES CONSISTENCY	0	0	0	0	0	0	0	0	0	0	
URINE AMOUNT	0	0	0	0	0	0	0	0	0	0	
URINE COLOR	0	0	0	0	0	0	0	0	0	0	
BEHAVIOR FROM CAGE	0	0	0	0	0	0	0	0	0	0	
PHYSICAL EXAMINATION											
DEATH	-	-	-	-	-	-	-	-	-	-	
HAIR COAT	0	0	0	0	0	0	0	0	0	0	
MUCOUS MEMB./EYE/SKIN COLOR	0	0	0	0	0	0	0	0	0	0	
BODY TEMPERATURE	0	0	0	0	0	0	0	0	0	0	
RESPIRATORY RATE	0	0	0	0	0	0	0	0	0	0	
RESPIRATORY CHARACTER	0	0	0	0	0	0	0	0	0	0	
LACRIMATION	0	0	0	0	0	0	0	0	0	0	
SALIVATION AMOUNT	0	0	0	0	0	0	0	0	0	0	
SALIVATION ONSET	-	-	-	-	-	-	-	-	-	-	
EYE PROMINENCE	0	0	0	0	0	0	0	0	0	0	
PALPEBRAL CLOSURE	0	0	0	0	0	0	0	0	0	0	
CONVULSION ONSET	-	-	-	-	-	-	-	-	-	-	
TYPE OF CONVULSION	-	-	-	-	-	-	-	-	-	-	
LENGTH OF SEIZURE	-	-	-	-	-	-	-	-	-	-	
LENGTH OF POST-ICTAL PERIOD	-	-	-	-	-	-	-	-	-	-	
BITING	-	-	-	-	-	-	-	-	-	-	
TREMOR SEVERITY	-	-	-	-	-	-	-	-	-	-	
TREMOR ONSET	-	-	-	-	-	-	-	-	-	-	
HANDLING BEHAVIOR	8	0	0	0	0	0	0	0	0	0	
NEUROLOGICAL EXAMINATION											
LOCOMOTOR ACTIVITY (N=2)	2	2	2	2	2	2	2	2	2	1	
REARING ACTIVITY	0	0	0	0	0	0	0	0	0	0	
TAIL ELEVATION	0	0	0	0	0	0	0	0	1	2	
STATIC LIMB POSITION	0	0	0	0	0	0	0	0	0	0	
ABNORMAL GAIT	-	-	-	-	-	-	-	-	-	-	
HYPOTONIC GAIT - HINDLIMB	0	0	0	0	0	0	0	0	0	0	
HYPOTONIC GAIT - FORELIMB	0	0	0	0	0	0	0	0	0	0	
ATAXIC GAIT	0	0	0	0	0	0	0	0	0	0	
HEAD POSITION	0	0	0	0	0	0	0	0	0	0	
APPROACH RESPONSE (N=1)	1	1	0	0	0	0	0	1	0	0	
TOUCH RESPONSE	R	0	0	0	0	0	T	T	R	R	
AUDITORY ORIENTATION	A	0	A	0	0	A	A	A	A	A	
OLFACTORY ORIENTATION	A	A	A	0	A	0	A	A	0	A	
RIGHTING REFLEX	0	0	0	0	0	0	0	0	0	0	
PROPRIOCEPTIVE POSITIONING	0	0	0	0	0	0	0	0	0	0	
TAIL PINCH (N=A)	R	A	A	R	0	R	R	R	R	R	
ABDOMINAL TONE (N=2)	2	2	2	2	1	2	2	2	2	2	
BLADDER TONE	0	0	0	0	0	0	0	0	0	0	
MUSCLE TONE	0	0	0	0	0	0	0	0	0	0	
PASSIVE MANIPULATION	R	0	0	0	0	0	0	0	0	0	
PUPILLARY SIZE	0	0	0	0	0	0	0	0	0	0	
EYE POSITION	0	0	0	0	0	0	0	0	0	0	
NYSTAGMUS - RESTING	0	0	0	0	0	0	0	0	0	0	
NYSTAGMUS - POSITIONAL	0	0	0	0	0	0	0	0	0	0	
VISUAL ORIENTATION	P	P	P	P	S	P	P	P	P	P	
PALPEBRAL REFLEX	0	0	0	0	0	0	0	0	0	0	
PINNA TOUCH RESPONSE (N=2)	0	0	0	0	0	2	0	0	0	0	
EXTENSOR POSTURAL THRUST	0	0	0	0	0	0	0	0	0	0	
HOPPING REFLEX	0	0	0	0	0	0	0	0	0	0	
VISUAL PLACING	0	0	0	0	0	0	0	0	0	0	
GRIP STRENGTH - SEMI-QUANT.	0	0	0	0	0	0	0	0	0	0	
GRIP STRENGTH-QUANT.											
(FORELIMB) 1	629	674	639	692	660	666	652	710	689	649	
2	629	612	661	682	660	625	658	690	658	654	
3	700	643	689	669	515	621	649	828	744	428	
(HINDLIMB) 1	790	1056	500	588	1029	901	333	600	751	341	
2	591	360	742	1032	420	719	479	1042	408	789	
3	501	671	778	841	701	518	600	693	840	770	
BIZARRE BEHAVIOR	-	-	-	-	-	-	-	-	-	-	
DEFECATION	0	1	3	3	4	0	0	2	0	1	
URINATION	0	0	0	2	0	1	0	0	0	0	
SPONTANEOUS VOCALIZATIONS	19	7	7	7	2	3	4	2	9	8	

ADDITIONAL COMMENTS: Rat #28 - Alopecia on forearms.

FUNCTIONAL OBSERVATIONAL BATTERY - INDIVIDUAL DATA

DATE: 6-17-88
STUDY DAY: 60
SPECIES: RAT
SEX: MALE

RECORDER: KEN SHEPARD
OBSERVER: LISA BERNARD
TABLE NO.: 13

STUDY NO.: 880017I1
ACC. NO.: 907124
DOSE LEVEL: 400 PPM
PAGE 4 OF 4

MAL NUMBERS	31	32	33	34	35	36	37	38	39	40	COMMENTS/SUMMARY
CAGESIDE OBSERVATION											
HOME CAGE ACTIVITY	A	A	0	A	0	S	0	0	0	A	
FECES AMOUNT	0	0	0	0	0	0	0	0	0	0	
FECES COLOR	0	0	0	0	0	0	0	0	0	0	
FECES CONSISTENCY	0	0	0	0	0	0	0	0	0	0	
URINE AMOUNT	0	0	0	0	0	0	0	0	0	0	
URINE COLOR	0	0	0	0	0	0	0	0	0	0	
BEHAVIOR FROM CAGE	0	0	0	0	0	0	0	0	0	1	
PHYSICAL EXAMINATION											
DEATH	-	-	-	-	-	-	-	-	-	-	
HAIR COAT	0	0	0	0	0	0	0	0	0	0	
MUCOUS MEMB./EYE/SKIN COLOR	0	0	0	0	0	0	0	0	0	0	
BODY TEMPERATURE	0	0	0	0	0	0	0	0	0	0	
RESPIRATORY RATE	0	0	0	0	0	0	0	0	0	0	
RESPIRATORY CHARACTER	0	0	0	0	0	0	0	0	0	0	
LACRIMATION	0	0	0	0	0	0	0	0	0	0	
SALIVATION AMOUNT	0	0	0	0	0	0	0	0	0	0	
SALIVATION ONSET	-	-	-	-	-	-	-	-	-	-	
EYE PROMINENCE	0	0	0	0	0	0	0	0	0	0	
PALPEBRAL CLOSURE	0	0	0	0	0	0	0	0	0	0	
CONVULSION ONSET	-	-	-	-	-	-	-	-	-	-	
TYPE OF CONVULSION	-	-	-	-	-	-	-	-	-	-	
LENGTH OF SEIZURE	-	-	-	-	-	-	-	-	-	-	
LENGTH OF POST-ICTAL PERIOD	-	-	-	-	-	-	-	-	-	-	
BITING	-	-	-	-	-	-	-	-	-	-	
TREMOR SEVERITY	-	-	-	-	-	-	-	-	-	-	
TREMOR ONSET	-	-	-	-	-	-	-	-	-	-	
HANDLING BEHAVIOR	0	0	0	0	0	0	0	0	0	4	
NEUROLOGICAL EXAMINATION											
LOCOMOTOR ACTIVITY (N=2)	4	2	2	2	4	2	2	2	0	1	
REARING ACTIVITY	2	0	0	0	0	0	0	0	0	0	
TAIL ELEVATION	2	0	0	0	0	0	0	0	0	0	
STATIC LIMB POSITION	0	0	0	0	0	0	0	0	0	0	
ABNORMAL GAIT	-	-	-	-	-	-	-	-	-	-	
HYPOTONIC GAIT - HINDLIMB	0	0	0	0	0	0	0	0	0	0	
HYPOTONIC GAIT - FORELIMB	0	0	0	0	0	0	0	0	0	0	
ATAXIC GAIT	0	0	0	0	0	0	0	0	0	0	
HEAD POSITION	0	0	0	0	0	0	0	0	0	0	
APPROACH RESPONSE (N=1)	0	0	0	0	0	1	0	0	0	0	
TOUCH RESPONSE	0	C	R	T	T	T	C	0	0	0	
AUDITORY ORIENTATION	A	A	0	A	A	A	A	A	A	A	
OLFACTORY ORIENTATION	A	0	0	A	0	0	0	A	A	A	
RIGHTING REFLEX	0	0	0	0	0	0	0	0	0	0	
PROPRIOCEPTIVE POSITIONING	0	0	0	0	0	0	0	0	0	0	
TAIL PINCH (N=A)	A	A	*	R	0	T	*	R	0	0	*Pulled tail away.
ABDOMINAL TONE (N=2)	2	2	2	2	2	2	2	2	2	4	
BLADDER TONE	0	0	0	0	0	0	0	0	0	0	
MUSCLE TONE	0	0	0	0	0	0	0	0	0	0	
PASSIVE MANIPULATION	0	0	0	0	0	0	0	0	0	0	
PUPILLARY SIZE	0	0	0	0	0	0	0	0	0	0	
EYE POSITION	0	0	0	0	0	0	0	0	0	0	
NYSTAGMUS - RESTING	0	0	0	0	0	0	0	0	0	0	
NYSTAGMUS - POSITIONAL	0	0	0	0	0	0	0	0	0	0	
VISUAL ORIENTATION	P	S	P	P	S	P	P	P	P	P	
PALPEBRAL REFLEX	0	0	0	0	0	0	0	0	0	0	
PINNA TOUCH RESPONSE (N=2)	0	2	4	0	0	0	4	0	0	0	
EXTENSOR POSTURAL THRUST	0	0	0	0	0	0	0	0	0	0	
HOPPING REFLEX	0	0	0	0	0	0	0	0	0	0	
VISUAL PLACING	0	0	0	0	0	0	0	0	0	0	
GRIP STRENGTH - SEMI-QUANT.	0	0	0	0	0	0	0	0	0	0	
GRIP STRENGTH-QUANT.											
(FORELIMB) 1	621	632	619	669	645	655	671	691	618	622	
2	626	600	719	658	650	659	676	690	622	657	
3	632	645	666	670	645	671	670	692	645	661	
(HINDLIMB) 1	580	700	470	541	670	772	612	701	840	1049	
2	709	478	614	769	868	376	461	681	408	873	
3	640	1230	785	401	362	900	491	1148	857	712	
BIZARRE BEHAVIOR	-	-	-	-	-	-	-	-	-	-	
DEFECATION	0	3	6	0	0	0	1	0	6	3	
URINATION	0	0	2	0	0	1	0	0	0	1	
SPONTANEOUS VOCALIZATIONS	6	4	2	5	3	6	4	4	5	28	

ADDITIONAL COMMENTS: Rat #32 - Alopecia on shoulders and forepaws. Rat #39 - Twitches ears. Rat #36 - Alopecia on forepaws. Rat #37 - Alopecia on shoulders. Rat #34 - Alopecia on shoulders. Rat #33 - Alopecia on forepaws and animal quivers. Rat #32 - Grip strength of 1230 was maximum on gauge.

3646T

FUNCTIONAL OBSERVATIONAL BATTERY - INDIVIDUAL DATA

DATE: 7-22-88
STUDY DAY: 95
SPECIES: RAT
SEX: MALE

RECORDER: KEN SHEPARD
OBSERVER: LISA BERNARD
TABLE NO.: 14

STUDY NO.: 88001711
ACC. NO.: 907124
DOSE LEVEL: 0 PPM
PAGE 1 OF 4

MAL NUMBERS	1	2	3	4	5	6	7	8	9	10	COMMENTS/SUMMARY
CAGESIDE OBSERVATION											
HOME CAGE ACTIVITY	0	A	0	0	A	S	A	S	0	0	
FECES AMOUNT	0	0	0	0	0	0	0	0	0	0	
FECES COLOR	0	0	0	0	0	0	0	0	0	0	
FECES CONSISTENCY	0	0	0	0	0	0	0	0	0	0	
URINE AMOUNT	0	0	0	0	0	0	0	0	0	0	
URINE COLOR	0	0	0	0	0	0	0	0	0	0	
BEHAVIOR FROM CAGE	0	0	0	0	0	0	0	0	0	0	
PHYSICAL EXAMINATION											
DEATH	-	-	-	-	-	-	-	-	-	-	
HAIR COAT	0	0	0	0	0	0	0	0	0	0	
MUCOUS MEMB./EYE/SKIN COLOR	0	0	0	0	0	0	0	0	0	0	
BODY TEMPERATURE	0	0	0	0	0	0	0	0	0	0	
RESPIRATORY RATE	0	0	0	0	0	0	0	0	0	0	
RESPIRATORY CHARACTER	0	0	0	0	0	0	0	0	0	0	
LACRIMATION	0	0	0	0	0	0	0	0	0	0	
SALIVATION AMOUNT	0	0	0	0	0	0	0	0	0	0	
SALIVATION ONSET	-	-	-	-	-	-	-	-	-	-	
EYE PROMINENCE	0	0	0	0	0	0	0	0	0	0	
PALPEBRAL CLOSURE	0	0	0	0	0	0	0	0	0	0	
CONVULSION ONSET	-	-	-	-	-	-	-	-	-	-	
TYPE OF CONVULSION	-	-	-	-	-	-	-	-	-	-	
LENGTH OF SEIZURE	-	-	-	-	-	-	-	-	-	-	
LENGTH OF POST-ICTAL PERIOD	-	-	-	-	-	-	-	-	-	-	
BITING	-	-	-	-	-	-	-	-	-	-	
TREMOR SEVERITY	-	-	-	-	-	-	-	-	-	-	
TREMOR ONSET	-	-	-	-	-	-	-	-	-	-	
HANDLING BEHAVIOR	0	0	0	0	0	0	0	0	0	0	
NEUROLOGICAL EXAMINATION											
LOCOMOTOR ACTIVITY (N=2)	2	2	2	1	1	2	2	2	1	2	
REARING ACTIVITY	2	2	0	0	0	0	0	0	0	0	
TAIL ELEVATION	0	0	0	2	0	0	0	0	0	0	
STATIC LIMB POSITION	0	0	0	0	0	0	0	0	0	0	
ABNORMAL GAIT	-	-	-	-	-	-	-	-	-	-	
HYPOTONIC GAIT - HINDLIMB	0	0	0	0	0	0	0	0	0	0	
HYPOTONIC GAIT - FORELIMB	0	0	0	0	0	0	0	0	0	0	
ATAXIC GAIT	0	0	0	0	0	0	0	0	0	0	
HEAD POSITION	0	0	0	0	0	0	0	0	0	0	
APPROACH RESPONSE (N=1)	1	4	1	0	1	0	1	0	0	0	
TOUCH RESPONSE	R	0	0	0	0	R	R	0	0	R	
AUDITORY ORIENTATION	0	A	0	A	A	0	0	0	A	0	
OLFACTORY ORIENTATION	A	A	0	A	A	A	0	0	A	0	
RIGHTING REFLEX	0	0	0	0	0	0	0	0	0	0	
PROPRIOCEPTIVE POSITIONING	0	0	0	0	0	0	0	0	0	0	
TAIL PINCH (N=A)	E	0	R	0	*	0	*	A	0	R	*Pulled tail away.
ABDOMINAL TONE (N=2)	2	2	2	1	2	2	2	2	2	2	
BLADDER TONE	0	0	0	0	0	0	0	0	0	0	
MUSCLE TONE	0	0	0	0	0	0	0	0	0	0	
PASSIVE MANIPULATION	0	0	0	0	0	0	0	0	0	0	
PUPILLARY SIZE	0	0	0	0	0	0	0	0	0	0	
EYE POSITION	0	0	0	0	0	0	0	0	0	0	
NYSTAGMUS - RESTING	0	0	0	0	0	0	0	0	0	0	
NYSTAGMUS - POSITIONAL	0	0	0	0	0	0	0	0	0	0	
VISUAL ORIENTATION	P	P	0	P	P	P	S	0	P	P	
PALPEBRAL REFLEX	0	0	0	0	0	0	0	0	0	0	
PINNA TOUCH RESPONSE (N=2)	2	0	0	0	2	0	2	0	0	0	
EXTENSOR POSTURAL THRUST	0	0	0	0	0	0	0	0	0	0	
HOPPING REFLEX	0	0	0	0	0	0	0	0	0	0	
VISUAL PLACING	0	0	0	0	0	0	0	0	0	0	
GRIP STRENGTH - SEMI-QUANT.	0	0	0	0	0	0	0	0	0	0	
GRIP STRENGTH-QUANT.											
(FORELIMB) 1	925	900	1148	1313	1198	848	1385	1128	1308	1428	
2	930	1100	1275	1398	875	1383	1295	868	1695	948	
3	748	1000	1370	1298	1570	1045	1695	1155	2213	928	
(HINDLIMB) 1	958	1348	897	670	1445	648	930	793	1460	1258	
2	590	1030	822	753	1053	505	1400	775	908	1123	
3	635	960	673	775	940	793	1008	673	845	685	
BIZARRE BEHAVIOR	-	-	-	-	-	-	-	-	-	-	
DEFECATION	3	3	4	0	0	0	0	0	0	2	
URINATION	0	0	1	0	0	0	0	0	0	0	
SPONTANEOUS VOCALIZATIONS	6	3	0	3	4	3	9	4	2	8	

ADDITIONAL COMMENTS: Rat #7 - Alopecia on forepaws.
Rat #9 - Alopecia on forearms and forepaws.

FUNCTIONAL OBSERVATIONAL BATTERY - INDIVIDUAL DATA

DATE: 7-22-88
STUDY DAY: 95
SPECIES: RAT
SEX: MALE

RECORDER: KEN SHEPARD
OBSERVER: LISA BERNARD
TABLE NO.: 14

STUDY NO.: 880017I1
ACC. NO.: 907124
DOSE LEVEL: 100 PPM
PAGE 2 OF 4

MAL NUMBERS	11	12	13	14	15	16	17	18	19	20	COMMENTS/SUMMARY
CAGESIDE OBSERVATION											
HOME CAGE ACTIVITY	0	0	0	0	A	S	0	0	A	0	
FECES AMOUNT	0	0	0	0	0	0	0	0	0	0	
FECES COLOR	0	0	0	0	0	0	0	0	0	0	
FECES CONSISTENCY	0	0	0	0	0	0	0	0	0	0	
URINE AMOUNT	0	0	0	0	0	0	0	0	0	0	
URINE COLOR	0	0	0	0	0	0	0	0	0	0	
BEHAVIOR FROM CAGE	0	0	0	0	0	0	0	1	0	0	
PHYSICAL EXAMINATION											
DEATH	-	-	-	-	-	-	-	-	-	-	
HAIR COAT	0	0	0	0	0	0	0	0	0	0	
MUCOUS MEMB./EYE/SKIN COLOR	0	0	0	0	0	0	0	0	0	0	
BODY TEMPERATURE	0	0	0	0	0	0	0	0	0	0	
RESPIRATORY RATE	0	0	0	0	0	0	0	0	0	0	
RESPIRATORY CHARACTER	0	0	0	0	0	0	0	0	0	0	
LACRIMATION	0	0	0	0	0	0	0	0	0	0	
SALIVATION AMOUNT	0	0	0	0	0	0	0	0	0	0	
SALIVATION ONSET	-	-	-	-	-	-	-	-	-	-	
EYE PROMINENCE	0	0	0	0	0	0	0	0	0	0	
PALPEBRAL CLOSURE	0	0	0	0	0	0	0	0	0	0	
CONVULSION ONSET	-	-	-	-	-	-	-	-	-	-	
TYPE OF CONVULSION	-	-	-	-	-	-	-	-	-	-	
LENGTH OF SEIZURE	-	-	-	-	-	-	-	-	-	-	
LENGTH OF POST-ICTAL PERIOD	-	-	-	-	-	-	-	-	-	-	
BITING	-	-	-	-	-	-	-	-	-	-	
TREMOR SEVERITY	-	-	-	-	-	-	-	-	-	-	
TREMOR ONSET	-	-	-	-	-	-	-	-	-	-	
HANDLING BEHAVIOR	0	8	8	0	0	0	0	4	0	0	
NEUROLOGICAL EXAMINATION											
LOCOMOTOR ACTIVITY (N=2)	2	2	2	1	1	1	2	1	2	2	
REARING ACTIVITY	4	0	0	0	0	0	0	0	0	0	
TAIL ELEVATION	2	0	0	2	2	0	0	2	0	2	
STATIC LIMB POSITION	0	0	0	0	0	0	0	0	0	0	
ABNORMAL GAIT	-	-	-	-	-	-	-	-	-	-	
HYPOTONIC GAIT - HINDLIMB	0	0	0	0	0	0	0	0	0	0	
HYPOTONIC GAIT - FORELIMB	0	0	0	0	0	0	0	0	0	0	
ATAXIC GAIT	0	0	0	0	0	0	0	0	0	0	
HEAD POSITION	0	0	0	0	0	0	0	0	0	0	
APPROACH RESPONSE (N=1)	1	0	1	0	0	0	0	0	1	1	
TOUCH RESPONSE	0	0	T	0	R	0	0	T	C	0	
AUDITORY ORIENTATION	A	A	0	A	A	A	A	A	A	A	
OLFACTORY ORIENTATION	A	A	0	A	A	A	A	A	A	A	
RIGHTING REFLEX	0	0	0	0	0	0	0	0	0	0	
PROPRIOCEPTIVE POSITIONING	0	0	0	0	0	0	0	0	0	0	
TAIL PINCH (N=A)	0	0	*	R	R	R	R	E	*	R	*Pulled tail away.
ABDOMINAL TONE (N=2)	1	4	2	2	2	2	2	4	2	2	
BLADDER TONE	0	0	0	0	0	0	0	0	0	0	
MUSCLE TONE	0	T	0	0	0	0	0	0	0	0	
PASSIVE MANIPULATION	0	R	R	0	0	0	0	0	0	0	
PUPILLARY SIZE	0	0	0	0	0	0	0	0	0	0	
EYE POSITION	0	0	0	0	0	0	0	0	0	0	
NYSTAGMUS - RESTING	0	0	0	0	0	0	0	0	0	0	
NYSTAGMUS - POSITIONAL	0	0	0	0	0	0	0	0	0	0	
VISUAL ORIENTATION	P	P	P	P	P	P	P	P	P	P	
PALPEBRAL REFLEX	0	0	0	0	0	0	0	0	0	0	
PINNA TOUCH RESPONSE (N=2)	0	0	2	0	2	0	0	2	0	0	
EXTENSOR POSTURAL THRUST	0	0	0	0	0	0	0	0	0	0	
HOPPING REFLEX	0	0	0	0	0	0	0	0	0	0	
VISUAL PLACING	0	0	0	0	0	0	0	0	0	0	
GRIP STRENGTH - SEMI-QUANT.	0	0	0	0	0	2	0	0	0	0	
GRIP STRENGTH-QUANT.											
(FORELIMB) 1	1503	845	1055	1403	425	1270	878	1870	1498	1028	
2	1620	795	905	865	1428	1105	1070	1278	1020	1253	
3	1253	1185	1160	1285	1100	1370	975	1523	1718	668	
(HINDLIMB) 1	998	783	675	1095	685	560	1483	1598	623	1000	
2	705	955	580	1060	895	618	1100	1198	1173	1338	
3	1048	603	478	1145	898	578	1103	800	1040	678	
BIZARRE BEHAVIOR	-	-	-	-	-	-	-	-	-	-	
DEFECATION	0	3	2	2	2	2	0	5	3	3	
URINATION	0	0	1	0	0	0	0	3	0	0	
SPONTANEOUS VOCALIZATIONS	0	37	23	6	8	2	4	18	1	1	

ADDITIONAL COMMENTS:

FUNCTIONAL OBSERVATIONAL BATTERY - INDIVIDUAL DATA

DATE: 7-22-88
STUDY DAY: 95
SPECIES: RAT
SEX: MALE

RECORDER: KEN SHEPARD
OBSERVER: LISA BERNARD
TABLE NO.: 14

STUDY NO.: 880017I1
ACC. NO.: 907124
DOSE LEVEL: 200 PPM
PAGE 3 OF 4

MAL NUMBERS	21	22	23	24	25	26	27	28	29	30	COMMENTS/SUMMARY
CAGESIDE OBSERVATION											
HOME CAGE ACTIVITY	A	0	A	0	0	A	S	A	0	0	
FECES AMOUNT	0	0	0	0	0	0	0	0	0	0	
FECES COLOR	0	0	0	0	0	0	0	0	0	0	
FECES CONSISTENCY	0	0	0	0	0	0	0	0	0	0	
URINE AMOUNT	0	0	0	0	0	0	0	0	0	0	
URINE COLOR	0	0	0	0	0	0	0	0	0	0	
BEHAVIOR FROM CAGE	0	0	0	0	0	0	0	0	0	0	
PHYSICAL EXAMINATION											
DEATH	-	-	-	-	-	-	-	-	-	-	
HAIR COAT	0	0	0	0	0	0	0	0	0	0	
MUCOUS MEMB./EYE/SKIN COLOR	0	0	0	0	0	0	0	0	0	0	
BODY TEMPERATURE	0	0	0	0	0	0	0	0	0	0	
RESPIRATORY RATE	0	0	0	0	0	0	0	0	0	0	
RESPIRATORY CHARACTER	0	0	0	0	0	0	0	0	0	0	
LACRIMATION	0	0	0	0	0	0	0	0	0	0	
SALIVATION AMOUNT	0	0	0	0	0	0	0	0	0	0	
SALIVATION ONSET	-	-	-	-	-	-	-	-	-	-	
EYE PROMINENCE	0	0	0	0	0	0	0	0	0	0	
PALPEBRAL CLOSURE	0	0	0	0	0	0	0	0	0	0	
CONVULSION ONSET	-	-	-	-	-	-	-	-	-	-	
TYPE OF CONVULSION	-	-	-	-	-	-	-	-	-	-	
LENGTH OF SEIZURE	-	-	-	-	-	-	-	-	-	-	
LENGTH OF POST-ICTAL PERIOD	-	-	-	-	-	-	-	-	-	-	
BITING	-	-	-	-	-	-	-	-	-	-	
TREMOR SEVERITY	-	-	-	-	-	-	-	-	-	-	
TREMOR ONSET	-	-	-	-	-	-	-	-	-	-	
HANDLING BEHAVIOR	0	0	0	8	0	0	0	0	0	0	
NEUROLOGICAL EXAMINATION											
LOCOMOTOR ACTIVITY (N=2)	1	2	1	2	2	2	1	2	2	1	
REARING ACTIVITY	0	0	0	0	0	0	0	0	0	0	
TAIL ELEVATION	0	0	2	2	2	0	0	0	0	2	
STATIC LIMB POSITION	0	0	0	0	0	0	0	0	0	0	
ABNORMAL GAIT	-	-	-	-	-	-	-	-	-	-	
HYPOTONIC GAIT - HINDLIMB	0	0	0	0	0	0	0	0	0	0	
HYPOTONIC GAIT - FORELIMB	0	0	0	0	0	0	0	0	0	0	
ATAXIC GAIT	0	0	0	0	0	0	0	0	0	0	
HEAD POSITION	0	0	0	0	0	0	0	0	0	0	
APPROACH RESPONSE (N=1)	0	0	0	1	1	1	0	1	0	0	
TOUCH RESPONSE	0	0	0	T	0	0	0	R	T	0	
AUDITORY ORIENTATION	A	A	A	0	A	A	A	A	A	A	
OLFACTORY ORIENTATION	A	A	A	A	0	A	0	A	A	A	
RIGHTING REFLEX	0	0	0	0	0	0	0	0	0	0	
PROPRIOCEPTIVE POSITIONING	0	0	0	0	0	0	0	0	0	0	
TAIL PINCH (N=A)	R	0	0	E	R	R	A	T	0	R	
ABDOMINAL TONE (N=2)	2	2	2	4	2	2	2	2	2	2	
BLADDER TONE	0	0	0	0	0	0	0	0	0	0	
MUSCLE TONE	0	0	0	0	0	0	0	0	0	0	
PASSIVE MANIPULATION	0	0	0	R	0	0	0	0	0	0	
PUPILLARY SIZE	0	0	0	0	0	0	0	0	0	0	
EYE POSITION	0	0	0	0	0	0	0	0	0	0	
NYSTAGMUS - RESTING	0	0	0	0	0	0	0	0	0	0	
NYSTAGMUS - POSITIONAL	0	0	0	0	0	0	0	0	0	0	
VISUAL ORIENTATION	P	P	P	P	P	P	P	P	P	P	
PALPEBRAL REFLEX	0	0	0	0	0	0	0	0	0	0	
PINNA TOUCH RESPONSE (N=2)	0	0	0	0	2	2	0	0	0	0	
EXTENSOR POSTURAL THRUST	0	0	0	0	0	0	0	0	0	0	
HOPPING REFLEX	0	0	0	0	0	0	0	0	0	0	
VISUAL PLACING	0	0	0	0	0	0	0	0	0	0	
GRIP STRENGTH - SEMI-QUANT.	0	0	0	0	0	0	0	0	0	0	
GRIP STRENGTH-QUANT.											
(FORELIMB) 1	865	1595	625	1818	1348	845	840	1100	880	1000	
2	848	878	1175	1000	1868	1338	883	780	1113	740	
3	603	1000	1388	1345	1065	1198	848	1305	988	713	
(HINDLIMB) 1	403	920	458	1028	1198	930	808	908	703	810	
2	620	1045	745	1290	1738	1573	1070	1053	760	943	
3	473	668	565	870	1100	625	835	925	965	648	
BIZARRE BEHAVIOR	-	-	-	-	-	-	-	-	-	-	
DEFECATION	0	2	0	0	2	0	1	0	0	3	
URINATION	0	1	0	1	2	0	0	0	1	0	
SPONTANEOUS VOCALIZATIONS	8	5	6	37	4	0	9	6	4	21	

ADDITIONAL COMMENTS: Rat #28 - Alopecia of forepaws

FUNCTIONAL OBSERVATIONAL BATTERY - INDIVIDUAL DATA

DATE: 7-22-88
STUDY DAY: 95
SPECIES: RAT
SEX: MALE

RECORDER: KEN SHEPARD
OBSERVER: LISA BERNARD
TABLE NO.: 14

STUDY NO.: 880017I1
ACC. NO.: 907124
DOSE LEVEL: 400 PPM
PAGE 4 OF 4

MAL NUMBERS	31	32	33	34	35	36	37	38	39	40	COMMENTS/SUMMARY
CAGESIDE OBSERVATION											
HOME CAGE ACTIVITY	A	0	S	S	0	S	0	A	S	0	
FECES AMOUNT	0	0	0	0	0	0	0	0	0	0	
FECES COLOR	0	0	0	0	0	0	0	0	0	0	
FECES CONSISTENCY	0	0	0	0	0	0	0	0	0	0	
URINE AMOUNT	0	0	0	0	0	0	0	0	0	0	
URINE COLOR	0	0	0	0	0	0	0	0	0	0	
BEHAVIOR FROM CAGE	0	1	0	0	0	0	0	0	0	8	
PHYSICAL EXAMINATION											
DEATH	-	-	-	-	-	-	-	-	-	-	
HAIR COAT	0	0	0	0	0	0	0	0	0	0	
MUCOUS MEMB./EYE/SKIN COLOR	0	0	0	0	0	0	0	0	0	0	
BODY TEMPERATURE	0	0	0	0	0	0	0	0	0	0	
RESPIRATORY RATE	0	0	0	0	0	0	0	0	0	0	
RESPIRATORY CHARACTER	0	0	0	0	0	0	0	0	0	0	
LACRIMATION	0	0	0	0	0	0	0	0	0	0	
SALIVATION AMOUNT	0	0	0	0	0	0	0	0	0	0	
SALIVATION ONSET	-	-	-	-	-	-	-	-	-	-	
EYE PROMINENCE	0	0	0	0	0	0	0	0	0	0	
PALPEBRAL CLOSURE	0	0	0	0	0	0	0	0	0	0	
CONVULSION ONSET	-	-	-	-	-	-	-	-	-	-	
TYPE OF CONVULSION	-	-	-	-	-	-	-	-	-	-	
LENGTH OF SEIZURE	-	-	-	-	-	-	-	-	-	-	
LENGTH OF POST-ICTAL PERIOD	-	-	-	-	-	-	-	-	-	-	
BITING	-	-	-	-	-	-	-	-	-	-	
TREMOR SEVERITY	-	-	-	-	-	-	-	-	-	-	
TREMOR ONSET	-	-	-	-	-	-	-	-	-	-	
HANDLING BEHAVIOR	8	0	0	0	0	0	0	0	0	8	
NEUROLOGICAL EXAMINATION											
LOCOMOTOR ACTIVITY (N=2)	2	2	2	2	4	2	2	2	1	2	
REARING ACTIVITY	0	0	0	0	0	0	0	0	0	0	
TAIL ELEVATION	2	2	2	0	0	0	0	0	0	0	
STATIC LIMB POSITION	0	0	0	0	0	0	0	0	0	0	
ABNORMAL GAIT	-	-	-	-	-	-	-	-	-	-	
HYPOTONIC GAIT - HINDLIMB	0	0	0	0	0	0	0	0	0	0	
HYPOTONIC GAIT - FORELIMB	0	0	0	0	0	0	0	0	0	0	
ATAXIC GAIT	0	0	0	0	0	0	0	0	0	0	
HEAD POSITION	0	0	0	0	0	0	0	0	0	0	
APPROACH RESPONSE (N=1)	0	1	0	1	1	1	0	0	0	0	
TOUCH RESPONSE	0	T	T	T	0	0	C	T	R	0	
AUDITORY ORIENTATION	A	0	A	0	0	A	A	0	A	A	
OLFACTORY ORIENTATION	A	0	A	0	A	A	A	A	A	A	
RIGHTING REFLEX	0	0	0	0	0	0	0	0	0	0	
PROPRIOCEPTIVE POSITIONING	0	0	0	0	0	0	0	0	0	0	
TAIL PINCH (N=A)	R	R	*	T	A	R	*	R	E	R	*Pulled tail away.
ABDOMINAL TONE (N=2)	4	2	2	2	2	2	2	2	2	4	
BLADDER TONE	0	0	0	0	0	0	0	0	0	0	
MUSCLE TONE	0	0	0	0	0	0	0	0	0	0	
PASSIVE MANIPULATION	R	0	0	0	0	0	0	0	0	0	
PUPILLARY SIZE	0	0	0	0	0	0	0	0	0	0	
EYE POSITION	0	0	0	0	0	0	0	0	0	0	
NYSTAGMUS - RESTING	0	0	0	0	0	0	0	0	0	0	
NYSTAGMUS - POSITIONAL	0	0	0	0	0	0	0	0	0	0	
VISUAL ORIENTATION	P	0	P	P	P	P	P	P	P	P	
PALPEBRAL REFLEX	0	0	0	0	0	0	0	0	0	0	
PINNA TOUCH RESPONSE (N=2)	2	0	0	0	2	2	0	0	0	2	
EXTENSOR POSTURAL THRUST	0	0	0	0	0	0	0	0	0	0	
HOPPING REFLEX	0	0	0	0	0	0	0	0	0	0	
VISUAL PLACING	0	0	0	0	0	0	0	0	0	0	
GRIP STRENGTH - SEMI-QUANT.	0	0	0	0	0	0	0	0	0	0	
GRIP STRENGTH-QUANT.											
(FORELIMB) 1	908	1180	823	845	1005	1023	1385	503	780	1498	
2	928	1230	1580	1060	1270	1173	1173	850	1178	1535	
3	928	1895	1218	870	1185	1250	1150	1070	740	1005	
(HINDLIMB) 1	1455	1348	1033	615	633	1630	403	773	763	633	
2	648	1395	913	750	458	1400	650	923	1303	1185	
3	1130	1050	820	625	845	830	945	733	628	733	
BIZARRE BEHAVIOR	-	-	-	-	-	-	-	-	-	-	
DEFECATION	0	5	6	0	0	0	1	0	0	2	
URINATION	1	0	1	0	0	1	1	0	0	4	
SPONTANEOUS VOCALIZATIONS	28	8	2	0	4	7	4	2	6	32	

ADDITIONAL COMMENTS: Rat #32 - Alopecia on face and forepaws.
Rat #36 - Alopecia on forepaws and forearms.
Rat #33 - Alopecia on forepaws.

3646T

FUNCTIONAL OBSERVATIONAL BATTERY - INDIVIDUAL DATA

DATE: 4-21-88
STUDY DAY: -4
SPECIES: RAT
SEX: FEMALE

RECORDER: KEN SHEPARD
OBSERVER: LISA BERNARD
TABLE NO.: 15

STUDY NO.: 88001712
ACC. NO.: 907124
DOSE LEVEL: 0 PPM
PAGE 1 OF 4

IMAL NUMBERS	41	42	43	44	45	46	47	48	49	50	COMMENTS/SUMMARY
CAGESIDE OBSERVATION											
HOME CAGE ACTIVITY	A	S	A	A	0	0	0	S	0	S	
FECES AMOUNT	0	0	0	0	0	0	0	0	0	0	
FECES COLOR	0	0	0	0	0	0	0	0	0	0	
FECES CONSISTENCY	0	0	F	0	0	0	0	0	0	0	
URINE AMOUNT	0	0	0	0	0	0	0	0	0	0	
URINE COLOR	0	0	0	0	0	0	0	0	0	0	
BEHAVIOR FROM CAGE	0	0	0	0	0	0	0	0	0	0	
PHYSICAL EXAMINATION											
DEATH	-	-	-	-	-	-	-	-	-	-	
HAIR COAT	0	0	0	0	0	0	0	0	0	0	
MUCOUS MEMB./EYE/SKIN COLOR	0	0	0	0	0	0	0	0	0	0	
BODY TEMPERATURE	0	0	0	0	0	0	0	0	0	0	
RESPIRATORY RATE	0	0	0	0	0	0	0	0	0	0	
RESPIRATORY CHARACTER	0	0	0	0	0	0	0	0	0	0	
LACRIMATION	0	0	0	0	0	0	0	0	0	0	
SALIVATION AMOUNT	0	0	0	0	0	0	0	0	0	0	
SALIVATION ONSET	-	-	-	-	-	-	-	-	-	-	
EYE PROMINENCE	0	0	0	0	0	0	0	0	0	0	
PALPEBRAL CLOSURE	0	0	0	0	0	0	0	0	0	0	
CONVULSION ONSET	-	-	-	-	-	-	-	-	-	-	
TYPE OF CONVULSION	-	-	-	-	-	-	-	-	-	-	
LENGTH OF SEIZURE	-	-	-	-	-	-	-	-	-	-	
LENGTH OF POST-ICTAL PERIOD	-	-	-	-	-	-	-	-	-	-	
BITING	-	-	-	-	-	-	-	-	-	-	
TREMOR SEVERITY	-	-	-	-	4	-	-	-	-	-	
TREMOR ONSET	-	-	-	-	R	-	-	-	-	-	
HANDLING BEHAVIOR	0	0	0	0	0	0	0	0	0	4	
NEUROLOGICAL EXAMINATION											
LOCOMOTOR ACTIVITY (N=2)	4	2	2	2	4	2	2	4	2	4	
REARING ACTIVITY	0	0	0	0	0	0	0	0	0	0	
TAIL ELEVATION	0	0	0	0	0	0	0	0	0	0	
STATIC LIMB POSITION	0	0	0	0	0	0	0	0	0	0	
ABNORMAL GAIT	-	-	-	-	-	-	-	-	-	-	
HYPOTONIC GAIT - HINDLIMB	0	0	0	0	0	0	0	0	0	0	
HYPOTONIC GAIT - FORELIMB	0	0	0	0	0	0	0	0	0	0	
ATAXIC GAIT	0	0	0	0	0	0	0	0	0	0	
HEAD POSITION	0	0	0	0	0	0	0	0	0	0	
APPROACH RESPONSE (N=1)	1	1	1	1	2	1	1	1	1	1	
TOUCH RESPONSE	R	0	F	R	R	R	R	R	R	T	
AUDITORY ORIENTATION	0	A	A	A	A	A	0	0	A	A	
OLFACTORY ORIENTATION	0	0	0	0	A	0	0	0	0	0	
RIGHTING REFLEX	0	0	0	0	0	0	0	0	0	0	
PROPRIOCEPTIVE POSITIONING	0	0	0	0	0	0	0	0	0	0	
TAIL PINCH (N=A)	R	R	R	0	R	T	T	R	R	0	
ABDOMINAL TONE (N=2)	2	4	4	4	2	4	2	2	2	2	
BLADDER TONE	0	0	0	0	0	0	0	0	0	0	
MUSCLE TONE	0	0	0	0	0	0	0	0	0	0	
PASSIVE MANIPULATION	0	0	0	0	0	0	0	0	0	0	
PUPILLARY SIZE	0	0	0	0	0	0	0	0	0	0	
EYE POSITION	0	0	0	0	0	0	0	0	0	0	
NYSTAGMUS - RESTING	0	0	0	0	0	0	0	0	0	0	
NYSTAGMUS - POSITIONAL	0	0	0	0	0	0	0	0	0	0	
VISUAL ORIENTATION	S	S	S	P	P	S	P	P	S	S	
PALPEBRAL REFLEX	0	0	0	0	0	0	0	0	0	0	
PINNA TOUCH RESPONSE (N=2)	2	4	4	0	4	2	2	2	0	2	
EXTENSOR POSTURAL THRUST	0	0	0	0	0	0	0	0	0	0	
HOPPING REFLEX	0	0	0	0	0	0	0	0	0	0	
VISUAL PLACING	0	0	0	0	0	0	0	0	0	0	
GRIP STRENGTH - SEMI-QUANT.	0	0	0	0	0	0	0	6	0	0	
GRIP STRENGTH-QUANT.											
(FORELIMB) 1	541	343	411	394	288	291	387	182	470	352	
2	193	582	291	572	609	400	390	201	434	468	
3	169	531	218	248	588	309	501	347	400	589	
(HINDLIMB) 1	200	415	237	309	490	175	572	128	211	589	
2	270	221	382	511	864	479	310	269	525	170	
3	204	390	493	340	233	211	672	179	404	522	
BIZARRE BEHAVIOR	-	-	-	-	-	-	-	-	-	-	
DEFECATION	0	0	1	4	0	4	3	2	0	2	
URINATION	1	0	1	1	0	0	1	1	1	1	
SPONTANEOUS VOCALIZATIONS	11	6	5	12	7	9	6	4	4	19	

ADDITIONAL COMMENTS:

FUNCTIONAL OBSERVATIONAL BATTERY - INDIVIDUAL DATA

DATE: 4-21-88
STUDY DAY: -4
SPECIES: RAT
SEX: FEMALE

RECORDER: KEN SHEPARD
OBSERVER: LISA BERNARD
TABLE NO.: 15

STUDY NO.: 880017I2
ACC. NO.: 907124
DOSE LEVEL: 100 PPM
PAGE 2 OF 4

ANIMAL NUMBERS	51	52	53	54	55	56	57	58	59	60	COMMENTS/SUMMARY
CAGESIDE OBSERVATION											
HOME CAGE ACTIVITY	A	A	0	A	A	A	A	A	A	S	
FECES AMOUNT	0	0	0	0	0	0	0	0	0	0	
FECES COLOR	0	0	0	0	0	0	0	0	0	0	
FECES CONSISTENCY	0	0	0	0	0	0	0	0	0	0	
URINE AMOUNT	0	0	0	0	0	0	0	0	0	0	
URINE COLOR	0	0	0	0	0	0	0	0	0	0	
BEHAVIOR FROM CAGE	0	0	0	4	4	0	0	0	0	8	
PHYSICAL EXAMINATION											
DEATH	-	-	-	-	-	-	-	-	-	-	
HAIR COAT	0	0	0	0	0	0	0	0	0	0	
MUCOUS MEMB./EYE/SKIN COLOR	0	0	0	0	0	0	0	0	0	0	
BODY TEMPERATURE	0	0	0	0	0	0	0	0	0	0	
RESPIRATORY RATE	0	0	0	0	0	0	0	0	0	0	
RESPIRATORY CHARACTER	0	0	0	0	0	0	0	0	0	0	
LACRIMATION	0	0	0	0	0	0	0	0	0	0	
SALIVATION AMOUNT	0	0	0	0	0	0	0	0	0	0	
SALIVATION ONSET	-	-	-	-	-	-	-	-	-	-	
EYE PROMINENCE	0	0	0	0	0	0	0	0	0	0	
PALPEBRAL CLOSURE	0	0	0	0	0	0	0	0	0	0	
CONVULSION ONSET	-	-	-	-	-	-	-	-	-	-	
TYPE OF CONVULSION	-	-	-	-	-	-	-	-	-	-	
LENGTH OF SEIZURE	-	-	-	-	-	-	-	-	-	-	
LENGTH OF POST-ICTAL PERIOD	-	-	-	-	-	-	-	-	-	-	
BITING	-	-	-	-	-	-	-	-	-	-	
TREMOR SEVERITY	-	-	-	-	-	-	-	-	-	-	
TREMOR ONSET	-	-	-	-	-	-	-	-	-	-	
HANDLING BEHAVIOR	0	0	0	4	0	0	0	8	4	8	
NEUROLOGICAL EXAMINATION											
LOCOMOTOR ACTIVITY (N=2)	4	4	2	2	2	4	4	4	2	4	
REARING ACTIVITY	0	0	0	0	0	0	0	0	0	0	
TAIL ELEVATION	0	0	0	0	0	0	0	0	0	0	
STATIC LIMB POSITION	0	0	0	0	0	0	0	0	0	0	
ABNORMAL GAIT	-	-	-	-	-	-	-	-	-	-	
HYPOTONIC GAIT - HINDLIMB	0	0	0	0	0	0	0	0	0	0	
HYPOTONIC GAIT - FORELIMB	0	0	0	0	0	0	0	0	0	0	
ATAXIC GAIT	0	0	0	0	0	0	0	0	0	0	
HEAD POSITION	0	0	0	0	0	0	0	0	0	0	
APPROACH RESPONSE (N=1)	6	0	0	1	1	0	0	0	1	4	
TOUCH RESPONSE	R	T	0	R	R	R	R	R	R	R	
AUDITORY ORIENTATION	A	A	A	A	0	A	0	0	0	A	
OLFACTORY ORIENTATION	0	A	A	0	0	0	0	0	0	0	
RIGHTING REFLEX	0	0	0	0	0	0	0	0	0	0	
PROPRIOCEPTIVE POSITIONING	0	0	0	0	0	0	0	0	0	0	
TAIL PINCH (N=A)	R	0	0	R	R	R	R	R	R	E	
ABDOMINAL TONE (N=2)	2	2	2	4	2	4	2	2	4	2	
BLADDER TONE	0	0	0	0	0	0	0	0	0	0	
MUSCLE TONE	0	0	0	0	0	0	0	0	0	0	
PASSIVE MANIPULATION	0	0	0	0	0	0	0	0	0	R	
PUPILLARY SIZE	0	0	0	0	0	0	0	0	0	0	
EYE POSITION	0	0	0	0	0	0	0	0	0	0	
NYSTAGMUS - RESTING	0	0	0	0	0	0	0	0	0	0	
NYSTAGMUS - POSITIONAL	0	0	0	0	0	0	0	0	0	0	
VISUAL ORIENTATION	P	S	S	S	S	P	S	P	S	P	
PALPEBRAL REFLEX	0	0	0	0	0	0	0	0	0	0	
PINNA TOUCH RESPONSE (N=2)	4	2	2	4	2	4	4	2	2	0	
EXTENSOR POSTURAL THRUST	0	0	0	0	0	0	0	0	0	0	
HOPPING REFLEX	0	0	0	0	0	0	0	0	0	0	
VISUAL PLACING	0	0	0	0	0	0	0	0	0	0	
GRIP STRENGTH - SEMI-QUANT.	0	0	0	0	0	0	0	0	0	0	
GRIP STRENGTH-QUANT.											
(FORELIMB) 1	322	252	330	181	428	558	329	251	291	358	
2	369	560	262	347	270	480	152	398	598	260	
3	420	229	359	122	313	284	203	389	367	482	
(HINDLIMB) 1	149	110	559	130	229	284	257	209	301	378	
2	190	531	653	179	229	310	365	315	174	211	
3	392	427	587	169	425	328	289	250	153	379	
BIZARRE BEHAVIOR	-	-	-	-	-	-	-	-	-	-	
DEFECATION	1	2	0	4	0	1	4	0	2	0	
URINATION	1	1	0	0	0	0	1	1	0	1	
SPONTANEOUS VOCALIZATIONS	9	12	5	37	7	13	11	29	16	23	

ADDITIONAL COMMENTS:

FUNCTIONAL OBSERVATIONAL BATTERY - INDIVIDUAL DATA

DATE: 4-21-88
STUDY DAY: -4
SPECIES: RAT
SEX: FEMALE

RECORDER: KEN SHEPARD
OBSERVER: LISA BERNARD
TABLE NO.: 15

STUDY NO.: 88001712
ACC. NO.: 907124
DOSE LEVEL: 200 PPM
PAGE 3 OF 4

ANIMAL NUMBERS	61	62	63	64	65	66	67	68	69	70	COMMENTS/SUMMARY
CAGESIDE OBSERVATION											
HOME CAGE ACTIVITY	A	A	A	A	0	0	A	S	0	S	
FECES AMOUNT	0	0	0	0	0	0	0	0	0	0	
FECES COLOR	0	0	0	0	0	0	0	0	0	0	
FECES CONSISTENCY	0	0	0	0	0	0	0	0	0	0	
URINE AMOUNT	0	0	0	0	0	0	0	0	0	0	
URINE COLOR	0	0	0	0	0	0	0	0	0	0	
BEHAVIOR FROM CAGE	0	0	0	0	1	0	4	0	0	0	
PHYSICAL EXAMINATION											
DEATH	-	-	-	-	-	-	-	-	-	-	
HAIR COAT	0	0	0	0	0	0	0	0	0	0	
MUCOUS MEMB./EYE/SKIN COLOR	0	0	0	0	0	0	0	0	0	0	
BODY TEMPERATURE	0	0	0	0	0	0	0	0	0	0	
RESPIRATORY RATE	0	0	0	0	0	0	0	0	0	0	
RESPIRATORY CHARACTER	0	0	0	0	0	0	0	0	0	0	
LACRIMATION	0	0	0	0	0	0	0	0	0	0	
SALIVATION AMOUNT	0	0	0	0	0	0	0	0	0	0	
SALIVATION ONSET	-	-	-	-	-	-	-	-	-	-	
EYE PROMINENCE	0	0	0	0	0	0	0	0	0	0	
PALPEBRAL CLOSURE	0	0	0	0	0	0	0	0	0	0	
CONVULSION ONSET	-	-	-	-	-	-	-	-	-	-	
TYPE OF CONVULSION	-	-	-	-	-	-	-	-	-	-	
LENGTH OF SEIZURE	-	-	-	-	-	-	-	-	-	-	
LENGTH OF POST-ICTAL PERIOD	-	-	-	-	-	-	-	-	-	-	
BITING	-	-	-	-	-	-	-	-	-	-	
TREMOR SEVERITY	-	-	-	-	-	-	-	-	-	-	
TREMOR ONSET	-	-	-	-	-	-	-	-	-	-	
HANDLING BEHAVIOR	4	0	4	0	4	0	4	0	0	0	
NEUROLOGICAL EXAMINATION											
LOCOMOTOR ACTIVITY (N=2)	2	2	2	2	2	4	4	2	4	2	
REARING ACTIVITY	0	0	0	0	0	0	0	0	0	0	
TAIL ELEVATION	0	0	0	0	0	0	0	0	0	0	
STATIC LIMB POSITION	0	0	0	0	0	0	0	0	0	0	
ABNORMAL GAIT	-	-	-	-	-	-	-	-	-	-	
HYPOTONIC GAIT - HINDLIMB	0	0	0	0	0	0	0	0	0	0	
HYPOTONIC GAIT - FORELIMB	0	0	0	0	0	0	0	0	0	0	
ATAXIC GAIT	0	0	0	0	0	0	0	0	0	0	
HEAD POSITION	0	0	0	0	0	0	0	0	0	0	
APPROACH RESPONSE (N=1)	0	4	4	4	6	2	6	0	2	1	
TOUCH RESPONSE	R	T	R	C	R	0	0	R	0	T	
AUDITORY ORIENTATION	A	A	A	0	A	0	A	0	0	A	
OLFACTORY ORIENTATION	A	A	0	0	0	0	0	0	0	0	
RIGHTING REFLEX	0	0	0	0	0	0	0	0	0	0	
PROPRIOCEPTIVE POSITIONING	0	0	0	0	0	0	0	0	0	0	
TAIL PINCH (N=A)	R	A	R	R	R	R	R	R	R	R	
ABDOMINAL TONE (N=2)	4	4	2	2	4	2	2	2	2	2	
BLADDER TONE	0	0	0	0	0	0	0	0	0	0	
MUSCLE TONE	0	0	0	0	0	0	0	0	0	0	
PASSIVE MANIPULATION	0	0	0	0	0	0	0	0	0	0	
PUPILLARY SIZE	0	0	0	0	0	0	0	0	0	0	
EYE POSITION	0	0	0	0	0	0	0	0	0	0	
NYSTAGMUS - RESTING	0	0	0	0	0	0	0	0	0	0	
NYSTAGMUS - POSITIONAL	0	0	0	0	0	0	0	0	0	0	
VISUAL ORIENTATION	S	P	P	S	P	P	P	S	P	P	
PALPEBRAL REFLEX	0	0	0	0	0	0	0	0	0	0	
PINNA TOUCH RESPONSE (N=2)	2	2	2	2	2	2	2	4	2	6	
EXTENSOR POSTURAL THRUST	0	0	0	0	0	0	0	0	0	0	
HOPPING REFLEX	0	0	0	0	0	0	0	0	0	0	
VISUAL PLACING	0	0	0	0	0	0	0	0	0	0	
GRIP STRENGTH - SEMI-QUANT.	0	0	0	0	0	0	0	0	0	0	
GRIP STRENGTH-QUANT.											
(FORELIMB) 1	371	529	382	449	194	601	438	361	594	192	
2	572	429	312	582	180	610	539	218	230	327	
3	337	588	371	563	265	511	242	328	560	128	
(HINDLIMB) 1	443	120	289	211	200	191	255	102	130	218	
2	238	208	394	250	342	622	351	312	298	334	
3	471	200	225	309	160	401	447	273	200	170	
BIZARRE BEHAVIOR	-	-	-	-	-	-	-	-	-	-	
DEFECATION	3	3	3	6	3	1	4	4	1	3	
URINATION	0	1	1	0	0	0	0	0	1	2	
SPONTANEOUS VOCALIZATIONS	21	11	17	12	33	9	17	13	6	7	

ADDITIONAL COMMENTS:

3553T

FUNCTIONAL OBSERVATIONAL BATTERY - INDIVIDUAL DATA

DATE: 4-21-88
STUDY DAY: -4
SPECIES: RAT
SEX: FEMALE

RECORDER: KEN SHEPARD
OBSERVER: LISA BERNARD
TABLE NO.: 15

STUDY NO.: 88001712
ACC. NO.: 907124
DOSE LEVEL: 400 PPM
PAGE 4 OF 4

MAL NUMBERS	71	72	73	74	75	76	77	78	79	80	COMMENTS/SUMMARY
CAGESIDE OBSERVATION											
HOME CAGE ACTIVITY	A	A	A	A	A	0	S	S	A	A	
FECES AMOUNT	0	0	0	0	0	0	0	0	0	0	
FECES COLOR	0	0	0	0	0	0	0	0	0	0	
FECES CONSISTENCY	0	0	0	0	0	0	0	0	0	0	
URINE AMOUNT	0	0	0	0	0	0	0	0	0	0	
URINE COLOR	0	0	0	0	0	0	0	0	0	0	
BEHAVIOR FROM CAGE	0	0	0	0	0	0	0	0	4	0	
PHYSICAL EXAMINATION											
DEATH	-	-	-	-	-	-	-	-	-	-	
HAIR COAT	0	0	0	0	0	0	0	0	0	0	
MUCOUS MEMB./EYE/SKIN COLOR	0	0	0	0	0	0	0	0	0	0	
BODY TEMPERATURE	0	0	0	0	0	0	0	0	0	0	
RESPIRATORY RATE	0	0	0	0	0	0	0	0	0	0	
RESPIRATORY CHARACTER	0	0	0	0	0	0	0	0	0	0	
LACRIMATION	0	0	0	0	0	0	0	0	0	0	
SALIVATION AMOUNT	0	0	0	0	0	0	0	0	0	0	
SALIVATION ONSET	-	-	-	-	-	-	-	-	-	-	
EYE PROMINENCE	0	0	0	0	0	0	0	0	0	0	
PALPEBRAL CLOSURE	0	0	0	0	0	0	0	0	0	0	
CONVULSION ONSET	-	-	-	-	-	-	-	-	-	-	
TYPE OF CONVULSION	-	-	-	-	-	-	-	-	-	-	
LENGTH OF SEIZURE	-	-	-	-	-	-	-	-	-	-	
LENGTH OF POST-ICTAL PERIOD	-	-	-	-	-	-	-	-	-	-	
BITING	-	-	-	-	-	-	-	-	-	-	
TREMOR SEVERITY	-	-	-	-	-	-	-	-	-	-	
TREMOR ONSET	-	-	-	-	-	-	-	-	-	-	
HANDLING BEHAVIOR	0	0	0	4	4	4	0	0	4	4	
NEUROLOGICAL EXAMINATION											
LOCOMOTOR ACTIVITY (N=2)	2	2	4	2	4	2	4	4	4	2	
REARING ACTIVITY	0	0	0	0	0	0	0	0	0	0	
TAIL ELEVATION	0	0	0	0	0	0	0	0	0	0	
STATIC LIMB POSITION	0	0	0	0	0	0	0	0	0	0	
ABNORMAL GAIT	-	-	-	-	-	-	-	-	-	-	
HYPOTONIC GAIT - HINDLIMB	0	0	0	0	0	0	0	0	0	0	
HYPOTONIC GAIT - FORELIMB	0	0	0	0	0	0	0	0	0	0	
ATAXIC GAIT	0	0	0	0	0	0	0	0	0	0	
HEAD POSITION	0	0	0	0	0	0	0	0	0	0	
APPROACH RESPONSE (N=1)	1	0	1	6	0	0	1	1	1	1	
TOUCH RESPONSE	R	C	R	R	R	R	R	R	F	R	
AUDITORY ORIENTATION	A	0	0	0	0	A	0	A	A	A	
OLFACTORY ORIENTATION	0	0	0	0	0	0	0	0	0	0	
RIGHTING REFLEX	0	0	0	0	0	0	0	0	0	0	
PROPRIOCEPTIVE POSITIONING	0	0	0	0	0	0	0	0	0	0	
TAIL PINCH (N=A)	R	R	R	R	R	R	R	R	R	R	
ABDOMINAL TONE (N=2)	2	2	2	4	2	4	4	2	2	2	
BLADDER TONE	0	0	0	0	0	0	0	0	0	0	
MUSCLE TONE	0	0	0	0	0	0	0	0	0	0	
PASSIVE MANIPULATION	0	0	0	0	0	0	0	0	0	0	
PUPILLARY SIZE	0	0	0	0	0	0	0	0	0	0	
EYE POSITION	0	0	0	0	0	0	0	0	0	0	
NYSTAGMUS - RESTING	0	0	0	0	0	0	0	0	0	0	
NYSTAGMUS - POSITIONAL	0	0	0	0	0	0	0	0	0	0	
VISUAL ORIENTATION	0	S	P	P	P	P	S	P	P	P	
PALPEBRAL REFLEX	0	0	0	0	0	0	0	0	0	0	
PINNA TOUCH RESPONSE (N=2)	0	2	2	2	2	2	2	2	2	0	
EXTENSOR POSTURAL THRUST	0	0	0	0	0	0	0	0	0	0	
HOPPING REFLEX	0	0	0	0	0	0	0	0	0	0	
VISUAL PLACING	0	0	0	0	0	0	0	0	0	0	
GRIP STRENGTH - SEMI-QUANT.	0	0	0	0	0	0	0	0	0	0	
GRIP STRENGTH-QUANT.											
(FORELIMB) 1	235	415	501	531	289	318	335	565	468	395	
2	602	490	490	460	381	381	583	382	269	254	
3	320	302	372	621	568	591	574	534	280	402	
(HINDLIMB) 1	328	301	189	365	230	398	346	374	358	389	
2	337	365	478	322	303	462	220	409	239	400	
3	221	469	705	520	451	474	352	553	356	475	
BIZARRE BEHAVIOR	-	-	-	-	-	-	-	-	-	-	
DEFECATION	2	3	0	0	6	5	1	0	3	3	
URINATION	2	0	0	1	1	0	0	0	0	1	
SPONTANEOUS VOCALIZATIONS	4	6	8	30	16	24	18	9	28	22	

ADDITIONAL COMMENTS:

3553T

FUNCTIONAL OBSERVATIONAL BATTERY - INDIVIDUAL DATA

DATE: 4-29-88
STUDY DAY: 4
SPECIES: RAT
SEX: FEMALE

RECORDER: KEN SHEPARD
OBSERVER: LISA BERNARD
TABLE NO.: 16

STUDY NO.: 88001712
ACC. NO.: 907124
DOSE LEVEL: 0 PPM
PAGE 1 OF 4

ANIMAL NUMBERS	41	42	43	44	45	46	47	48	49	50	COMMENTS/SUMMARY
CAGESIDE OBSERVATION											
HOME CAGE ACTIVITY	0	A	A	S	0	0	A	A	S	0	
FECES AMOUNT	0	0	0	0	0	0	0	0	0	0	
FECES COLOR	0	0	0	0	0	0	0	0	0	0	
FECES CONSISTENCY	0	0	0	0	0	0	0	0	0	0	
URINE AMOUNT	0	0	0	0	0	0	0	0	0	0	
URINE COLOR	0	0	0	0	0	0	0	0	0	0	
BEHAVIOR FROM CAGE	0	1	0	0	0	0	4	0	0	0	
PHYSICAL EXAMINATION											
DEATH	-	-	-	-	-	-	-	-	-	-	
HAIR COAT	0	0	0	0	0	0	0	0	0	0	
MUCOUS MEMB./EYE/SKIN COLOR	0	0	0	0	0	0	0	0	0	0	
BODY TEMPERATURE	0	0	0	0	0	0	0	0	0	0	
RESPIRATORY RATE	0	0	0	0	0	0	0	0	0	0	
RESPIRATORY CHARACTER	0	0	0	0	0	0	0	0	0	0	
LACRIMATION	0	0	0	0	0	0	0	0	0	0	
SALIVATION AMOUNT	0	0	0	0	0	0	0	0	0	0	
SALIVATION ONSET	-	-	-	-	-	-	-	-	-	-	
EYE PROMINENCE	0	0	0	0	0	0	0	0	0	0	
PALPEBRAL CLOSURE	0	0	0	0	0	0	0	0	0	0	
CONVULSION ONSET	-	-	-	-	-	-	-	-	-	-	
TYPE OF CONVULSION	-	-	-	-	-	-	-	-	-	-	
LENGTH OF SEIZURE	-	-	-	-	-	-	-	-	-	-	
LENGTH OF POST-ICTAL PERIOD	-	-	-	-	-	-	-	-	-	-	
BITING	-	-	-	-	-	-	-	-	-	-	
TREMOR SEVERITY	-	-	-	-	-	-	-	-	-	-	
TREMOR ONSET	-	-	-	-	-	-	-	-	-	-	
HANDLING BEHAVIOR	0	0	0	4	0	0	4	0	0	0	
NEUROLOGICAL EXAMINATION											
LOCOMOTOR ACTIVITY (N=2)	2	2	2	2	4	2	2	2	2	2	
REARING ACTIVITY	0	0	0	0	0	0	2	0	0	0	
TAIL ELEVATION	0	0	0	0	0	0	0	0	0	0	
STATIC LIMB POSITION	0	0	0	0	0	0	0	0	0	0	
ABNORMAL GAIT	-	-	-	-	-	-	-	-	-	-	
HYPOTONIC GAIT - HINDLIMB	0	0	0	0	0	0	0	0	0	0	
HYPOTONIC GAIT - FORELIMB	0	0	0	0	0	0	0	0	0	0	
ATAXIC GAIT	0	0	0	0	0	0	0	0	0	0	
HEAD POSITION	0	0	0	0	0	0	0	0	0	0	
APPROACH RESPONSE (N=1)	0	1	1	1	1	1	1	0	1	1	
TOUCH RESPONSE	T	R	T	R	R	R	R	R	R	R	
AUDITORY ORIENTATION	0	A	0	A	0	0	A	A	0	A	
OLFACTORY ORIENTATION	0	0	0	A	0	A	0	A	0	0	
RIGHTING REFLEX	0	0	0	0	0	0	0	0	0	0	
PROPRIOCEPTIVE POSITIONING	0	0	0	0	0	0	0	0	0	0	
TAIL PINCH (N=A)	0	R	*	0	T	R	R	R	R	R	*Animal jerks tail away.
ABDOMINAL TONE (N=2)	2	2	2	2	2	2	2	2	2	2	
BLADDER TONE	0	0	0	0	0	0	0	0	0	0	
MUSCLE TONE	0	0	0	0	0	0	0	0	0	0	
PASSIVE MANIPULATION	0	0	0	0	0	0	0	0	0	0	
PUPILLARY SIZE	0	0	0	0	0	0	0	0	0	0	
EYE POSITION	0	0	0	0	0	0	0	0	0	0	
NYSTAGMUS - RESTING	0	0	0	0	0	0	0	0	0	0	
NYSTAGMUS - POSITIONAL	0	0	0	0	0	0	0	0	0	0	
VISUAL ORIENTATION	P	0	S	S	S	P	S	P	P	S	
PALPEBRAL REFLEX	0	0	0	0	0	0	0	0	0	0	
PINNA TOUCH RESPONSE (N=2)	2	2	0	0	4	2	2	2	2	0	
EXTENSOR POSTURAL THRUST	0	0	0	0	0	0	0	0	0	0	
HOPPING REFLEX	0	0	0	0	0	0	0	0	0	0	
VISUAL PLACING	0	0	0	0	0	0	0	0	0	0	
GRIP STRENGTH - SEMI-QUANT.	0	0	0	0	0	0	0	0	0	0	
GRIP STRENGTH-QUANT.											
(FORELIMB) 1	683	630	568	736	671	622	675	641	475	769	
2	319	299	314	633	745	704	618	646	679	841	
3	659	599	225	731	591	600	540	659	490	519	
(HINDLIMB) 1	742	341	240	318	624	296	722	472	428	467	
2	491	679	136	429	812	114	184	339	258	898	
3	811	494	484	506	221	352	210	152	407	225	
BIZARRE BEHAVIOR	-	-	-	-	-	-	-	-	-	-	
DEFECATION	0	0	0	1	0	3	0	0	0	0	
URINATION	0	0	0	1	0	1	0	1	0	0	
SPONTANEOUS VOCALIZATIONS	6	6	4	17	11	9	24	8	4	9	

ADDITIONAL COMMENTS:

3553T

FUNCTIONAL OBSERVATIONAL BATTERY - INDIVIDUAL DATA

DATE: 4-29-88
STUDY DAY: 4
SPECIES: RAT
SEX: FEMALE

RECORDER: KEN SHEPARD
OBSERVER: LISA BERNARD
TABLE NO.: 16

STUDY NO.: 88001712
ACC. NO.: 907124
DOSE LEVEL: 100 PPM
PAGE 2 OF 4

ANIMAL NUMBERS	51	52	53	54	55	56	57	58	59	60	COMMENTS/SUMMARY
CAGESIDE OBSERVATION											
HOME CAGE ACTIVITY	A	0	0	A	A	0	A	0	A	A	
FECES AMOUNT	0	0	0	0	0	0	0	0	0	0	
FECES COLOR	0	0	0	0	0	0	0	0	0	0	
FECES CONSISTENCY	0	0	0	0	0	0	0	0	0	0	
URINE AMOUNT	0	0	0	0	0	0	0	0	0	0	
URINE COLOR	0	0	0	0	0	0	0	0	0	0	
BEHAVIOR FROM CAGE	0	1	0	4	0	0	1	1	0	0	
PHYSICAL EXAMINATION											
DEATH	-	-	-	-	-	-	-	-	-	-	
HAIR COAT	0	0	0	0	0	0	0	0	0	0	
MUCOUS MEMB./EYE/SKIN COLOR	0	0	0	0	0	0	0	0	0	0	
BODY TEMPERATURE	0	0	0	0	0	0	0	0	0	0	
RESPIRATORY RATE	0	0	0	0	0	0	0	0	0	0	
RESPIRATORY CHARACTER	0	0	0	0	0	0	0	0	0	0	
LACRIMATION	0	0	0	0	0	0	0	0	0	0	
SALIVATION AMOUNT	0	0	0	0	0	0	0	0	0	0	
SALIVATION ONSET	-	-	-	-	-	-	-	-	-	-	
EYE PROMINENCE	0	0	0	0	0	0	0	0	0	0	
PALPEBRAL CLOSURE	0	0	0	0	0	0	0	0	0	0	
CONVULSION ONSET	-	-	-	-	-	-	-	-	-	-	
TYPE OF CONVULSION	-	-	-	-	-	-	-	-	-	-	
LENGTH OF SEIZURE	-	-	-	-	-	-	-	-	-	-	
LENGTH OF POST-ICTAL PERIOD	-	-	-	-	-	-	-	-	-	-	
BITING	-	-	-	-	-	-	-	-	-	-	
TREMOR SEVERITY	-	-	-	1	-	-	-	-	-	-	
TREMOR ONSET	-	-	-	R	-	-	-	-	-	-	
HANDLING BEHAVIOR	0	4	0	4	0	0	4	0	4	0	
NEUROLOGICAL EXAMINATION											
LOCOMOTOR ACTIVITY (N=2)	4	4	2	2	2	4	2	2	2	2	
REARING ACTIVITY	2	0	0	0	0	0	0	0	0	0	
TAIL ELEVATION	0	0	0	0	0	0	0	0	0	0	
STATIC LIMB POSITION	0	0	0	0	0	0	0	0	0	0	
ABNORMAL GAIT	-	-	-	-	-	-	-	-	-	-	
HYPOTONIC GAIT - HINDLIMB	0	0	0	0	0	0	0	0	0	0	
HYPOTONIC GAIT - FORELIMB	0	0	0	0	0	0	0	0	0	0	
ATAXIC GAIT	0	0	0	0	0	0	0	0	0	0	
HEAD POSITION	0	0	0	0	0	0	0	0	0	0	
APPROACH RESPONSE (N=1)	1	1	1	0	1	1	0	1	0	1	
TOUCH RESPONSE	R	R	T	R	R	R	0	R	R	R	
AUDITORY ORIENTATION	0	0	A	A	0	0	A	A	A	A	
OLFACTORY ORIENTATION	0	A	A	A	0	0	0	0	A	0	
RIGHTING REFLEX	0	0	0	0	0	0	0	0	0	0	
PROPRIOCEPTIVE POSITIONING	0	0	0	0	0	0	0	0	0	0	
TAIL PINCH (N=A)	R	R	R	R	R	R	R	R	R	R	
ABDOMINAL TONE (N=2)	2	2	2	2	2	2	2	2	2	2	
BLADDER TONE	0	0	0	0	0	0	0	0	0	0	
MUSCLE TONE	0	0	0	0	0	0	0	0	0	0	
PASSIVE MANIPULATION	0	0	0	0	0	0	0	0	0	0	
PUPILLARY SIZE	0	0	0	0	0	0	0	0	0	0	
EYE POSITION	0	0	0	0	0	0	0	0	0	0	
NYSTAGMUS - RESTING	0	0	0	0	0	0	0	0	0	0	
NYSTAGMUS - POSITIONAL	0	0	0	0	0	0	0	0	0	0	
VISUAL ORIENTATION	P	0	S	S	S	S	0	P	S	S	
PALPEBRAL REFLEX	0	0	0	0	0	0	0	0	0	0	
PINNA TOUCH RESPONSE (N=2)	2	2	2	2	4	4	4	2	4	0	
EXTENSOR POSTURAL THRUST	0	0	0	0	0	0	0	0	0	0	
HOPPING REFLEX	0	0	0	0	0	0	0	0	0	0	
VISUAL PLACING	0	0	0	0	0	0	0	0	0	0	
GRIP STRENGTH - SEMI-QUANT.	0	0	0	0	0	0	0	0	0	0	
GRIP STRENGTH-QUANT.											
(FORELIMB) 1	328	555	740	637	571	710	410	371	640	717	
2	348	673	459	688	438	528	693	708	431	712	
3	628	672	647	262	648	648	363	699	671	703	
(HINDLIMB) 1	190	310	658	451	109	206	148	330	210	540	
2	492	210	335	640	431	505	242	451	242	521	
3	410	229	551	600	223	709	226	388	198	225	
BIZARRE BEHAVIOR	-	-	-	-	-	-	-	-	-	-	
DEFECATION	0	6	0	8	1	0	0	0	4	0	
URINATION	0	0	0	1	0	0	0	1	2	0	
SPONTANEOUS VOCALIZATIONS	8	16	6	7	8	9	16	4	23	7	

ADDITIONAL COMMENTS:

3553T

FUNCTIONAL OBSERVATIONAL BATTERY - INDIVIDUAL DATA

DATE: 4-29-88
STUDY DAY: 4
SPECIES: RAT
SEX: FEMALE

RECORDER: KEN SHEPARD
OBSERVER: LISA BERNARD
TABLE NO.: 16

STUDY NO.: 88001712
ACC. NO.: 907124
DOSE LEVEL: 200 PPM
PAGE 3 OF 4

ANIMAL NUMBERS	61	62	63	64	65	66	67	68	69	70	COMMENTS/SUMMARY
CAGESIDE OBSERVATION											
HOME CAGE ACTIVITY	A	S	A	A	S	A	0	0	S	S	
FECES AMOUNT	0	0	0	0	0	0	0	0	0	0	
FECES COLOR	0	0	0	0	0	0	0	0	0	0	
FECES CONSISTENCY	0	0	0	0	0	0	0	0	0	0	
URINE AMOUNT	0	0	0	0	0	0	0	0	0	0	
URINE COLOR	0	0	0	0	0	0	0	0	0	0	
BEHAVIOR FROM CAGE	1	0	0	0	0	0	0	1	0	0	
PHYSICAL EXAMINATION											
DEATH	-	-	-	-	-	-	-	-	-	-	
HAIR COAT	0	0	0	0	0	0	0	0	0	0	
MUCOUS MEMB./EYE/SKIN COLOR	0	0	0	0	0	0	0	0	0	0	
BODY TEMPERATURE	0	0	0	0	0	0	0	0	0	0	
RESPIRATORY RATE	0	0	0	0	0	0	0	0	0	0	
RESPIRATORY CHARACTER	0	0	0	0	0	0	0	0	0	0	
LACRIMATION	0	0	0	0	0	0	0	0	0	0	
SALIVATION AMOUNT	0	0	0	0	0	0	0	0	0	0	
SALIVATION ONSET	-	-	-	-	-	-	-	-	-	-	
EYE PROMINENCE	0	0	0	0	0	0	0	0	0	0	
PALPEBRAL CLOSURE	0	0	0	0	0	0	0	0	0	0	
CONVULSION ONSET	-	-	-	-	-	-	-	-	-	-	
TYPE OF CONVULSION	-	-	-	-	-	-	-	-	-	-	
LENGTH OF SEIZURE	-	-	-	-	-	-	-	-	-	-	
LENGTH OF POST-ICTAL PERIOD	-	-	-	-	-	-	-	-	-	-	
BITING	-	-	-	-	-	-	-	-	-	-	
TREMOR SEVERITY	-	-	-	-	-	1	-	-	-	-	
TREMOR ONSET	-	-	-	-	-	R	-	-	-	-	
HANDLING BEHAVIOR	4	0	4	0	0	0	4	4	0	0	
NEUROLOGICAL EXAMINATION											
LOCOMOTOR ACTIVITY (N=2)	2	4	4	4	2	2	4	2	2	1	
REARING ACTIVITY	0	0	0	0	0	0	2	2	0	0	
TAIL ELEVATION	0	0	0	0	0	0	0	0	0	0	
STATIC LIMB POSITION	0	0	0	0	0	0	0	0	0	0	
ABNORMAL GAIT	-	-	-	-	-	-	-	-	-	-	
HYPOTONIC GAIT - HINDLIMB	0	0	0	0	0	0	0	0	0	0	
HYPOTONIC GAIT - FORELIMB	0	0	0	0	0	0	0	0	0	0	
ATAXIC GAIT	0	0	0	0	0	0	0	0	0	0	
HEAD POSITION	0	0	0	0	0	0	0	0	0	0	
APPROACH RESPONSE (N=1)	1	1	6	1	0	1	0	1	0	0	
TOUCH RESPONSE	T	R	0	0	T	T	R	0	R	0	
AUDITORY ORIENTATION	0	A	0	A	0	A	0	0	0	0	
OLFACTORY ORIENTATION	0	0	A	A	0	0	0	0	0	A	
RIGHTING REFLEX	0	0	0	0	0	0	0	0	0	0	
PROPRIOCEPTIVE POSITIONING	0	0	0	0	0	0	0	0	0	0	
TAIL PINCH (N=A)	R	0	T	*	R	T	0	A	T	0	*Animal jerked tail away.
ABDOMINAL TONE (N=2)	2	2	2	2	2	2	2	2	2	2	
BLADDER TONE	0	0	0	0	0	0	0	0	0	0	
MUSCLE TONE	0	0	0	0	0	0	0	0	0	0	
PASSIVE MANIPULATION	0	0	0	0	0	0	0	0	0	0	
PUPILLARY SIZE	0	0	0	0	0	0	0	0	0	0	
EYE POSITION	0	0	0	0	0	0	0	0	0	0	
NYSTAGMUS - RESTING	0	0	0	0	0	0	0	0	0	0	
NYSTAGMUS - POSITIONAL	0	0	0	0	0	0	0	0	0	0	
VISUAL ORIENTATION	S	0	S	S	P	S	P	S	P	P	
PALPEBRAL REFLEX	0	0	0	0	0	0	0	0	0	0	
PINNA TOUCH RESPONSE (N=2)	4	0	2	0	0	2	0	2	4	4	
EXTENSOR POSTURAL THRUST	0	0	0	0	0	0	0	0	0	0	
HOPPING REFLEX	0	0	0	0	0	0	0	0	0	0	
VISUAL PLACING	0	0	0	0	0	0	0	0	0	0	
GRIP STRENGTH - SEMI-QUANT.	0	0	0	0	0	0	0	0	0	0	
GRIP STRENGTH-QUANT.											
(FORELIMB) 1	751	462	399	489	417	699	593	761	432	319	
2	705	531	408	620	800	521	619	662	372	478	
3	622	578	551	672	435	513	351	628	746	563	
(HINDLIMB) 1	156	439	328	211	389	220	303	298	329	246	
2	280	632	354	172	733	164	322	329	172	500	
3	262	413	440	283	302	581	708	220	300	602	
BIZARRE BEHAVIOR	-	-	-	-	-	-	-	-	-	-	
DEFECATION	1	4	5	1	0	0	6	6	0	4	
URINATION	0	0	0	0	1	0	2	1	1	1	
SPONTANEOUS VOCALIZATIONS	15	5	14	10	9	7	27	18	6	4	

ADDITIONAL COMMENTS:

3553T

FUNCTIONAL OBSERVATIONAL BATTERY - INDIVIDUAL DATA

DATE: 4-29-88
STUDY DAY: 4
SPECIES: RAT
SEX: FEMALE

RECORDER: KEN SHEPARD
OBSERVER: LISA BERNARD
TABLE NO.: 16

STUDY NO.: 88001712
ACC. NO.: 907124
DOSE LEVEL: 400 PPM
PAGE 4 OF 4

MAL NUMBERS	71	72	73	74	75	76	77	78	79	80	COMMENTS/SUMMARY
CAGESIDE OBSERVATION											
HOME CAGE ACTIVITY	S	A	A	A	A	S	0	S	A	A	
FECES AMOUNT	0	0	0	0	0	0	0	0	0	0	
FECES COLOR	0	0	0	0	0	0	0	0	0	0	
FECES CONSISTENCY	0	0	0	0	0	0	0	0	0	0	
URINE AMOUNT	0	0	0	0	0	0	0	0	0	0	
URINE COLOR	0	0	0	0	0	0	0	0	0	0	
BEHAVIOR FROM CAGE	0	0	0	0	0	0	0	0	0	0	
PHYSICAL EXAMINATION											
DEATH	-	-	-	-	-	-	-	-	-	-	
HAIR COAT	0	0	0	0	0	0	0	0	0	0	
MUCOUS MEMB./EYE/SKIN COLOR	0	0	0	0	0	0	0	0	0	0	
BODY TEMPERATURE	0	0	0	0	0	0	0	0	0	0	
RESPIRATORY RATE	0	0	0	0	0	0	0	0	0	0	
RESPIRATORY CHARACTER	0	0	0	0	0	0	0	0	0	0	
LACRIMATION	0	0	0	0	0	0	0	0	0	0	
SALIVATION AMOUNT	0	0	0	0	0	0	0	0	0	0	
SALIVATION ONSET	-	-	-	-	-	-	-	-	-	-	
EYE PROMINENCE	0	0	0	0	0	0	0	0	0	0	
PALPEBRAL CLOSURE	0	0	0	0	0	0	0	0	0	0	
CONVULSION ONSET	-	-	-	-	-	-	-	-	-	-	
TYPE OF CONVULSION	-	-	-	-	-	-	-	-	-	-	
LENGTH OF SEIZURE	-	-	-	-	-	-	-	-	-	-	
LENGTH OF POST-ICTAL PERIOD	-	-	-	-	-	-	-	-	-	-	
BITING	-	-	-	-	-	-	-	-	-	-	
TREMOR SEVERITY	-	-	-	-	-	-	-	-	-	-	
TREMOR ONSET	-	-	-	-	-	-	-	-	-	-	
HANDLING BEHAVIOR	0	0	0	4	4	4	0	0	0	4	
NEUROLOGICAL EXAMINATION											
LOCOMOTOR ACTIVITY (N=2)	2	2	2	4	2	2	4	2	4	2	
REARING ACTIVITY	0	0	0	0	0	0	0	0	0	0	
TAIL ELEVATION	0	0	0	0	0	0	0	2	0	0	
STATIC LIMB POSITION	0	0	0	0	0	0	0	0	0	0	
ABNORMAL GAIT	-	-	-	-	-	-	-	-	-	-	
HYPOTONIC GAIT - HINDLIMB	0	0	0	0	0	0	0	0	0	0	
HYPOTONIC GAIT - FORELIMB	0	0	0	0	0	0	0	0	0	0	
ATAXIC GAIT	0	0	0	0	0	0	0	0	0	0	
HEAD POSITION	0	0	0	0	0	0	0	0	0	0	
APPROACH RESPONSE (N=1)	2	0	6	1	1	1	1	1	1	0	
TOUCH RESPONSE	R	R	R	R	R	R	R	R	T	T	
AUDITORY ORIENTATION	A	A	0	A	A	0	0	A	A	0	
OLFACTORY ORIENTATION	A	0	A	A	A	A	0	0	0	0	
RIGHTING REFLEX	0	0	0	0	0	0	0	0	0	0	
PROPRIOCEPTIVE POSITIONING	0	0	0	0	0	0	0	0	0	0	
TAIL PINCH (N=A)	R	0	R	R	R	R	R	R	*	0	*Animal jerked tail away.
ABDOMINAL TONE (N=2)	2	1	2	2	2	2	4	2	2	2	
BLADDER TONE	0	0	0	0	0	0	0	0	0	0	
MUSCLE TONE	0	0	0	0	0	0	0	0	0	0	
PASSIVE MANIPULATION	0	0	0	0	0	0	0	0	0	0	
PUPILLARY SIZE	0	0	0	0	0	0	0	0	0	0	
EYE POSITION	0	0	0	0	0	0	0	0	0	0	
NYSTAGMUS - RESTING	0	0	0	0	0	0	0	0	0	0	
NYSTAGMUS - POSITIONAL	0	0	0	0	0	0	0	0	0	0	
VISUAL ORIENTATION	S	S	P	P	P	S	P	S	0	P	
PALPEBRAL REFLEX	0	0	0	0	0	0	0	0	0	0	
PINNA TOUCH RESPONSE (N=2)	0	0	2	4	4	4	2	0	2	0	
EXTENSOR POSTURAL THRUST	0	0	0	0	0	0	0	0	0	0	
HOPPING REFLEX	0	0	0	0	0	0	0	0	0	0	
VISUAL PLACING	0	0	0	0	0	0	0	0	0	0	
GRIP STRENGTH - SEMI-QUANT.	0	0	0	0	0	0	4	0	0	0	
GRIP STRENGTH-QUANT.											
(FORELIMB) 1	422	721	500	470	679	659	312	671	725	699	
2	567	665	658	404	689	481	440	741	705	671	
3	362	619	719	722	530	642	371	742	691	764	
(HINDLIMB) 1	435	560	651	284	182	459	220	707	158	608	
2	404	448	789	398	133	550	209	949	201	622	
3	371	780	780	469	316	438	589	712	526	112	
BIZARRE BEHAVIOR	-	-	-	-	-	-	-	-	-	F	
DEFECATION	6	4	0	2	6	1	1	0	0	0	
URINATION	1	1	0	2	0	1	1	0	0	0	
SPONTANEOUS VOCALIZATIONS	9	6	6	13	16	20	4	3	11	24	

ADDITIONAL COMMENTS:

FUNCTIONAL OBSERVATIONAL BATTERY - INDIVIDUAL DATA

DATE: 5-05-88
STUDY DAY: 10
SPECIES: RAT
SEX: FEMALE

RECORDER: KEN SHEPARD
OBSERVER: LISA BERNARD
TABLE NO.: 17

STUDY NO.: 88001712
ACC. NO.: 907124
DOSE LEVEL: 0 PPM
PAGE 1 OF 4

ANIMAL NUMBERS	41	42	43	44	45	46	47	48	49	50	COMMENTS/SUMMARY
CAGESIDE OBSERVATION											
HOME CAGE ACTIVITY	S	A	A	0	0	A	0	S	S	0	
FECES AMOUNT	0	0	0	0	0	0	0	0	0	0	
FECES COLOR	0	0	0	0	0	0	0	0	0	0	
FECES CONSISTENCY	0	0	0	0	0	0	0	0	0	0	
URINE AMOUNT	0	0	0	0	0	0	0	0	0	0	
URINE COLOR	0	0	0	0	0	0	0	0	0	0	
BEHAVIOR FROM CAGE	0	0	0	0	0	0	1	0	0	0	
PHYSICAL EXAMINATION											
DEATH	-	-	-	-	-	-	-	-	-	-	
HAIR COAT	0	0	0	0	0	0	0	0	0	0	
MUCOUS MEMB./EYE/SKIN COLOR	0	0	0	0	0	0	0	0	0	0	
BODY TEMPERATURE	0	0	0	0	0	0	0	0	0	0	
RESPIRATORY RATE	0	0	0	0	0	0	0	0	0	0	
RESPIRATORY CHARACTER	0	0	0	0	0	0	0	0	0	0	
LACRIMATION	0	0	0	0	0	0	0	0	0	0	
SALIVATION AMOUNT	0	0	0	0	0	0	0	0	0	0	
SALIVATION ONSET	-	-	-	-	-	-	-	-	-	-	
EYE PROMINENCE	0	0	0	0	0	0	0	0	0	0	
PALPEBRAL CLOSURE	0	0	0	0	0	0	0	0	0	0	
CONVULSION ONSET	-	-	-	-	-	-	-	-	-	-	
TYPE OF CONVULSION	-	-	-	-	-	-	-	-	-	-	
LENGTH OF SEIZURE	-	-	-	-	-	-	-	-	-	-	
LENGTH OF POST-ICTAL PERIOD	-	-	-	-	-	-	-	-	-	-	
BITING	-	-	-	-	-	-	-	-	-	-	
TREMOR SEVERITY	-	-	-	-	-	-	-	-	-	-	
TREMOR ONSET	-	-	-	-	-	-	-	-	-	-	
HANDLING BEHAVIOR	0	0	0	4	0	0	4	0	0	0	
NEUROLOGICAL EXAMINATION											
LOCOMOTOR ACTIVITY (N=2)	2	2	2	2	2	2	4	2	2	2	
REARING ACTIVITY	0	0	0	0	0	0	0	0	0	0	
TAIL ELEVATION	0	0	0	0	0	0	0	0	0	0	
STATIC LIMB POSITION	0	0	0	0	0	0	0	0	0	0	
ABNORMAL GAIT	-	-	-	-	-	-	-	-	-	-	
HYPOTONIC GAIT - HINDLIMB	0	0	0	0	0	0	0	0	0	0	
HYPOTONIC GAIT - FORELIMB	0	0	0	0	0	0	0	0	0	0	
ATAXIC GAIT	0	0	0	0	0	0	0	0	0	0	
HEAD POSITION	0	0	0	0	0	0	0	0	0	0	
APPROACH RESPONSE (N=1)	0	1	1	0	2	1	1	0	1	2	
TOUCH RESPONSE	T	T	R	R	R	R	R	T	R	R	
AUDITORY ORIENTATION	0	A	0	A	0	0	A	A	0	A	
OLFACTORY ORIENTATION	0	A	0	0	0	0	0	0	A	A	
RIGHTING REFLEX	0	0	0	0	0	0	0	0	0	0	
PROPRIOCEPTIVE POSITIONING	0	0	0	0	0	0	0	0	0	0	
TAIL PINCH (N=A)	T	R	R	0	0	T	R	R	T	T	
ABDOMINAL TONE (N=2)	2	2	2	2	1	1	1	2	2	2	
BLADDER TONE	0	0	0	0	0	0	0	0	0	0	
MUSCLE TONE	0	0	0	0	0	0	0	0	0	0	
PASSIVE MANIPULATION	0	0	0	0	0	0	0	0	0	0	
PUPILLARY SIZE	0	0	0	0	0	0	0	0	0	0	
EYE POSITION	0	0	0	0	0	0	0	0	0	0	
NYSTAGMUS - RESTING	0	0	0	0	0	0	0	0	0	0	
NYSTAGMUS - POSITIONAL	0	0	0	0	0	0	0	0	0	0	
VISUAL ORIENTATION	S	0	0	P	S	P	S	P	S	S	
PALPEBRAL REFLEX	0	0	0	0	0	0	0	0	0	0	
PINNA TOUCH RESPONSE (N=2)	4	2	2	4	0	2	2	2	2	2	
EXTENSOR POSTURAL THRUST	0	0	0	0	0	0	0	0	0	0	
HOPPING REFLEX	0	0	0	0	0	0	0	0	0	0	
VISUAL PLACING	0	0	0	0	0	0	0	0	0	0	
GRIP STRENGTH - SEMI-QUANT.	0	0	0	0	0	0	0	0	0	0	
GRIP STRENGTH-QUANT.											
(FORELIMB) 1	682	641	416	708	671	625	621	695	659	671	
2	649	352	522	454	671	633	619	636	401	624	
3	591	650	581	681	619	588	631	669	652	531	
(HINDLIMB) 1	261	640	168	119	653	542	152	481	388	649	
2	723	680	272	329	502	210	570	890	542	463	
3	688	689	179	289	418	689	574	381	691	411	
BIZARRE BEHAVIOR	-	-	-	-	-	-	-	-	-	-	
DEFECATION	0	0	0	2	0	4	0	0	0	3	
URINATION	0	0	0	1	0	2	1	0	0	1	
SPONTANEOUS VOCALIZATIONS	7	7	4	12	7	6	15	5	3	6	

ADDITIONAL COMMENTS:

3553T

FUNCTIONAL OBSERVATIONAL BATTERY - INDIVIDUAL DATA

DATE: 5-05-88
STUDY DAY: 10
SPECIES: RAT
SEX: FEMALE

RECORDER: KEN SHEPARD
OBSERVER: LISA BERNARD
TABLE NO.: 17

STUDY NO.: 880017I2
ACC. NO.: 907124
DOSE LEVEL: 100 PPM
PAGE 2 OF 4

ANIMAL NUMBERS	51	52	53	54	55	56	57	58	59	60	COMMENTS/SUMMARY
CAGESIDE OBSERVATION											
HOME CAGE ACTIVITY	A	0	A	A	S	0	A	S	A	A	
FECES AMOUNT	0	0	0	0	0	0	0	0	0	0	
FECES COLOR	0	0	0	0	0	0	0	0	0	0	
FECES CONSISTENCY	0	0	0	0	0	0	0	0	0	0	
URINE AMOUNT	0	0	0	0	0	0	0	0	0	0	
URINE COLOR	0	0	0	0	0	0	0	0	0	0	
BEHAVIOR FROM CAGE	0	0	0	0	0	0	0	0	1	0	
PHYSICAL EXAMINATION											
DEATH	-	-	-	-	-	-	-	-	-	-	
HAIR COAT	0	0	0	0	0	0	0	0	0	0	
MUCOUS MEMB./EYE/SKIN COLOR	0	0	0	0	0	0	0	0	0	0	
BODY TEMPERATURE	0	0	0	0	0	0	0	0	0	0	
RESPIRATORY RATE	0	0	0	0	0	0	0	0	0	0	
RESPIRATORY CHARACTER	0	0	0	0	0	0	0	0	0	0	
LACRIMATION	0	0	0	0	0	0	0	0	0	0	
SALIVATION AMOUNT	0	0	0	0	0	0	0	0	0	0	
SALIVATION ONSET	-	-	-	-	-	-	-	-	-	-	
EYE PROMINENCE	0	0	0	0	0	0	0	0	0	0	
PALPEBRAL CLOSURE	0	0	0	0	0	0	0	0	0	0	
CONVULSION ONSET	-	-	-	-	-	-	-	-	-	-	
TYPE OF CONVULSION	-	-	-	-	-	-	-	-	-	-	
LENGTH OF SEIZURE	-	-	-	-	-	-	-	-	-	-	
LENGTH OF POST-ICTAL PERIOD	-	-	-	-	-	-	-	-	-	-	
BITING	-	-	-	-	-	-	-	-	-	-	
TREMOR SEVERITY	-	-	-	4	-	-	-	-	-	-	
TREMOR ONSET	-	-	-	R	-	-	-	-	-	-	
HANDLING BEHAVIOR	0	4	0	0	0	0	4	0	4	0	
NEUROLOGICAL EXAMINATION											
LOCOMOTOR ACTIVITY (N=2)	2	2	2	2	2	2	4	4	2	4	
REARING ACTIVITY	0	0	0	0	0	0	0	0	0	0	
TAIL ELEVATION	0	0	0	0	0	0	0	0	0	0	
STATIC LIMB POSITION	0	0	0	0	0	0	0	0	0	0	
ABNORMAL GAIT	-	-	-	-	-	-	-	-	-	-	
HYPOTONIC GAIT - HINDLIMB	0	0	0	0	0	0	0	0	0	0	
HYPOTONIC GAIT - FORELIMB	0	0	0	0	0	0	0	0	0	0	
ATAXIC GAIT	0	0	0	0	0	0	0	0	0	0	
HEAD POSITION	0	0	0	0	0	0	0	0	0	0	
APPROACH RESPONSE (N=1)	1	0	0	0	1	0	1	4	1	1	
TOUCH RESPONSE	R	R	0	R	T	R	R	R	T	R	
AUDITORY ORIENTATION	A	A	A	A	0	A	A	0	0	0	
OLFACTORY ORIENTATION	A	0	A	0	0	A	0	0	A	0	
RIGHTING REFLEX	0	0	0	0	0	0	0	0	0	0	
PROPRIOCEPTIVE POSITIONING	0	0	0	0	0	0	0	0	0	0	
TAIL PINCH (N=A)	T	R	0	0	R	A	0	R	R	T	
ABDOMINAL TONE (N=2)	2	2	2	2	2	2	2	1	2	2	
BLADDER TONE	0	0	0	0	0	0	0	0	0	0	
MUSCLE TONE	0	0	0	0	0	0	0	0	0	0	
PASSIVE MANIPULATION	0	0	0	0	0	0	0	0	0	0	
PUPILLARY SIZE	0	0	0	0	0	0	0	0	0	0	
EYE POSITION	0	0	0	0	0	0	0	0	0	0	
NYSTAGMUS - RESTING	0	0	0	0	0	0	0	0	0	0	
NYSTAGMUS - POSITIONAL	0	0	0	0	0	0	0	0	0	0	
VISUAL ORIENTATION	P	S	0	S	P	S	P	0	P	P	
PALPEBRAL REFLEX	0	0	0	0	0	0	0	0	0	0	
PINNA TOUCH RESPONSE (N=2)	2	2	0	2	2	0	4	2	2	2	
EXTENSOR POSTURAL THRUST	0	0	0	0	0	0	0	0	0	0	
HOPPING REFLEX	0	0	0	0	0	0	0	0	0	0	
VISUAL PLACING	0	0	0	0	0	0	0	0	0	0	
GRIP STRENGTH - SEMI-QUANT.	0	0	0	0	0	0	0	0	0	0	
GRIP STRENGTH-QUANT.											
(FORELIMB) 1	682	309	580	489	650	619	600	561	631	363	
2	405	501	665	698	361	642	401	701	623	669	
3	629	403	645	428	511	630	588	632	631	442	
(HINDLIMB) 1	182	511	195	438	100	492	242	362	549	902	
2	467	572	682	830	335	811	291	240	619	726	
3	428	202	558	275	679	270	833	651	735	129	
BIZARRE BEHAVIOR	-	-	-	-	-	-	-	-	-	-	
DEFECATION	0	4	0	0	1	0	0	0	3	0	
URINATION	0	2	0	0	0	0	1	1	2	0	
SPONTANEOUS VOCALIZATIONS	11	16	6	7	4	5	17	4	15	6	

ADDITIONAL COMMENTS:

3553T

FUNCTIONAL OBSERVATIONAL BATTERY - INDIVIDUAL DATA

DATE: 5-05-88
STUDY DAY: 10
SPECIES: RAT
SEX: FEMALE

RECORDER: KEN SHEPARD
OBSERVER: LISA BERNARD
TABLE NO.: 17

STUDY NO.: 88001712
ACC. NO.: 907124
DOSE LEVEL: 200 PPM
PAGE 3 OF 4

ANIMAL NUMBERS	61	62	63	64	65	66	67	68	69	70	COMMENTS/SUMMARY
CAGESIDE OBSERVATION											
HOME CAGE ACTIVITY	A	0	A	0	0	A	S	A	S	S	
FECES AMOUNT	0	0	0	0	0	0	0	0	0	0	
FECES COLOR	0	0	0	0	0	0	0	0	0	0	
FECES CONSISTENCY	0	0	0	0	0	0	0	0	0	0	
URINE AMOUNT	0	0	0	0	0	0	0	0	0	0	
URINE COLOR	0	0	0	0	0	0	0	0	0	0	
BEHAVIOR FROM CAGE	1	0	0	0	0	0	0	0	0	0	
PHYSICAL EXAMINATION											
DEATH	-	-	-	-	-	-	-	-	-	-	
HAIR COAT	0	0	0	0	0	0	0	0	0	0	
MUCOUS MEMB./EYE/SKIN COLOR	0	0	0	0	0	0	0	0	0	0	
BODY TEMPERATURE	0	0	0	0	0	0	0	0	0	0	
RESPIRATORY RATE	0	0	0	0	0	0	0	0	0	0	
RESPIRATORY CHARACTER	0	0	0	0	0	0	0	0	0	0	
LACRIMATION	0	0	0	0	0	0	0	0	0	0	
SALIVATION AMOUNT	0	0	0	0	0	0	0	0	0	0	
SALIVATION ONSET	-	-	-	-	-	-	-	-	-	-	
EYE PROMINENCE	0	0	0	0	0	0	0	0	0	0	
PALPEBRAL CLOSURE	0	0	0	0	0	0	0	0	0	0	
CONVULSION ONSET	-	-	-	-	-	-	-	-	-	-	
TYPE OF CONVULSION	-	-	-	-	-	-	-	-	-	-	
LENGTH OF SEIZURE	-	-	-	-	-	-	-	-	-	-	
LENGTH OF POST-ICTAL PERIOD	-	-	-	-	-	-	-	-	-	-	
BITING	-	-	-	-	-	-	-	-	-	-	
TREMOR SEVERITY	-	-	-	-	-	-	-	-	-	-	
TREMOR ONSET	-	-	-	-	-	-	-	-	-	-	
HANDLING BEHAVIOR	4	0	0	0	0	4	0	4	0	0	
NEUROLOGICAL EXAMINATION											
LOCOMOTOR ACTIVITY (N=2)	2	2	2	2	2	2	2	4	2	1	
REARING ACTIVITY	0	0	0	0	0	0	0	0	0	0	
TAIL ELEVATION	0	0	0	0	0	0	0	0	0	0	
STATIC LIMB POSITION	0	0	0	0	0	0	0	0	0	0	
ABNORMAL GAIT	-	-	-	-	-	-	-	-	-	-	
HYPOTONIC GAIT - HINDLIMB	0	0	0	0	0	0	0	0	0	0	
HYPOTONIC GAIT - FORELIMB	0	0	0	0	0	0	0	0	0	0	
ATAXIC GAIT	0	0	0	0	0	0	0	0	0	0	
HEAD POSITION	0	0	0	0	0	0	0	0	0	0	
APPROACH RESPONSE (N=1)	1	1	1	1	1	1	1	1	1	1	
TOUCH RESPONSE	T	T	T	R	R	T	R	T	R	T	
AUDITORY ORIENTATION	A	A	0	A	0	A	A	A	0	0	
OLFACTORY ORIENTATION	A	A	0	A	A	A	0	0	0	A	
RIGHTING REFLEX	0	0	0	0	0	0	0	0	0	0	
PROPRIOCEPTIVE POSITIONING	0	0	0	0	0	0	0	0	0	0	
TAIL PINCH (N=A)	R	R	T	0	T	0	0	T	R	R	
ABDOMINAL TONE (N=2)	2	2	2	2	2	1	2	2	2	2	
BLADDER TONE	0	0	0	0	0	0	0	0	0	0	
MUSCLE TONE	0	0	0	0	0	0	0	0	0	0	
PASSIVE MANIPULATION	0	0	0	0	0	0	0	0	0	0	
PUPILLARY SIZE	0	0	0	0	0	0	0	0	0	0	
EYE POSITION	0	0	0	0	0	0	0	0	0	0	
NYSTAGMUS - RESTING	0	0	0	0	0	0	0	0	0	0	
NYSTAGMUS - POSITIONAL	0	0	0	0	0	0	0	0	0	0	
VISUAL ORIENTATION	0	P	0	S	S	P	S	S	S	P	
PALPEBRAL REFLEX	0	0	0	0	0	0	0	0	0	0	
PINNA TOUCH RESPONSE (N=2)	4	0	4	0	2	0	2	4	2	0	
EXTENSOR POSTURAL THRUST	0	0	0	0	0	0	0	0	0	0	
HOPPING REFLEX	0	0	0	0	0	0	0	0	0	0	
VISUAL PLACING	0	0	0	0	0	0	0	0	0	0	
GRIP STRENGTH - SEMI-QUANT.	0	0	0	0	0	0	0	0	0	0	
GRIP STRENGTH-QUANT.											
(FORELIMB) 1	628	663	632	671	287	655	411	641	383	650	
2	622	593	485	661	642	639	629	689	525	565	
3	658	679	621	589	640	676	647	672	372	489	
(HINDLIMB) 1	463	439	846	368	554	461	201	490	360	340	
2	781	610	375	312	571	437	910	568	609	495	
3	878	491	621	519	398	832	954	503	399	434	
BIZARRE BEHAVIOR	-	-	-	-	-	-	-	-	-	-	
DEFECATION	1	1	0	0	0	0	4	0	1	2	
URINATION	0	1	0	0	0	0	0	1	1	1	
SPONTANEOUS VOCALIZATIONS	19	6	4	7	4	16	9	17	6	5	

ADDITIONAL COMMENTS:

FUNCTIONAL OBSERVATIONAL BATTERY - INDIVIDUAL DATA

DATE: 5-05-88
STUDY DAY: 10
SPECIES: RAT
SEX: FEMALE

RECORDER: KEN SHEPARD
OBSERVER: LISA BERNARD
TABLE NO.: 17

STUDY NO.: 880017I2
ACC. NO.: 907124
DOSE LEVEL: 400 PPM
PAGE 4 OF 4

ANIMAL NUMBERS	71	72	73	74	75	76	77	78	79	80	COMMENTS/SUMMARY
CAGESIDE OBSERVATION											
HOME CAGE ACTIVITY	S	A	A	0	A	A	S	0	0	A	
FECES AMOUNT	0	0	0	0	0	0	0	0	0	0	
FECES COLOR	0	0	0	0	0	0	0	0	0	0	
FECES CONSISTENCY	0	0	0	0	0	0	0	0	0	0	
URINE AMOUNT	0	0	0	0	0	0	0	0	0	0	
URINE COLOR	0	0	0	0	0	0	0	0	0	0	
BEHAVIOR FROM CAGE	0	0	0	0	1	0	0	0	0	0	
PHYSICAL EXAMINATION											
DEATH	-	-	-	-	-	-	-	-	-	-	
HAIR COAT	0	0	0	0	0	0	0	0	0	0	
MUCOUS MEMB./EYE/SKIN COLOR	0	0	0	0	0	0	0	0	0	0	
BODY TEMPERATURE	0	0	0	0	0	0	0	0	0	0	
RESPIRATORY RATE	0	0	0	0	0	0	0	0	0	0	
RESPIRATORY CHARACTER	0	0	0	0	0	0	0	0	0	0	
LACRIMATION	0	0	0	0	0	0	0	0	0	0	
SALIVATION AMOUNT	0	0	0	0	0	0	0	0	0	0	
SALIVATION ONSET	-	-	-	-	-	-	-	-	-	-	
EYE PROMINENCE	0	0	0	0	0	0	0	0	0	0	
PALPEBRAL CLOSURE	0	0	0	0	0	0	0	0	0	0	
CONVULSION ONSET	-	-	-	-	-	-	-	-	-	-	
TYPE OF CONVULSION	-	-	-	-	-	-	-	-	-	-	
LENGTH OF SEIZURE	-	-	-	-	-	-	-	-	-	-	
LENGTH OF POST-ICTAL PERIOD	-	-	-	-	-	-	-	-	-	-	
BITING	-	-	-	-	-	-	-	-	-	-	
TREMOR SEVERITY	-	-	-	-	-	2	-	2	-	-	
TREMOR ONSET	-	-	-	-	-	R	-	R	-	-	
HANDLING BEHAVIOR	0	0	0	4	4	0	0	0	0	4	
NEUROLOGICAL EXAMINATION											
LOCOMOTOR ACTIVITY (N=2)	1	2	2	2	2	2	4	1	4	2	
REARING ACTIVITY	0	0	0	0	0	0	0	0	0	0	
TAIL ELEVATION	0	0	0	0	0	0	0	0	0	0	
STATIC LIMB POSITION	0	0	0	0	0	0	0	0	0	0	
ABNORMAL GAIT	-	-	-	-	-	-	-	-	-	-	
HYPOTONIC GAIT - HINDLIMB	0	0	0	0	0	0	0	0	0	0	
HYPOTONIC GAIT - FORELIMB	0	0	0	0	0	0	0	0	0	0	
ATAXIC GAIT	0	0	0	0	0	0	0	0	0	0	
HEAD POSITION	0	0	0	0	0	0	0	0	0	0	
APPROACH RESPONSE (N=1)	0	1	0	1	0	1	0	1	0	1	
TOUCH RESPONSE	0	0	R	R	R	T	R	T	T	0	
AUDITORY ORIENTATION	A	A	0	0	A	0	0	A	A	0	
OLFACTORY ORIENTATION	A	A	0	0	A	A	0	0	0	A	
RIGHTING REFLEX	0	0	0	0	0	0	0	0	0	0	
PROPRIOCEPTIVE POSITIONING	0	0	0	0	0	0	0	0	0	0	
TAIL PINCH (N=A)	R	T	0	R	A	T	R	R	T	R	
ABDOMINAL TONE (N=2)	2	2	2	2	2	2	2	2	2	2	
BLADDER TONE	0	0	0	0	0	0	0	0	0	0	
MUSCLE TONE	0	0	0	0	0	0	0	0	0	0	
PASSIVE MANIPULATION	0	0	0	R	0	0	0	0	R	R	
PUPILLARY SIZE	0	0	0	0	0	0	0	0	0	0	
EYE POSITION	0	0	0	0	0	0	0	0	0	0	
NYSTAGMUS - RESTING	0	0	0	0	0	0	0	0	0	0	
NYSTAGMUS - POSITIONAL	0	0	0	0	0	0	0	0	0	0	
VISUAL ORIENTATION	P	P	S	P	P	S	P	P	0	S	
PALPEBRAL REFLEX	0	0	0	0	0	0	0	0	0	0	
PINNA TOUCH RESPONSE (N=2)	0	0	0	4	4	2	2	0	2	0	
EXTENSOR POSTURAL THRUST	0	0	0	0	0	0	0	0	0	0	
HOPPING REFLEX	0	0	0	0	0	0	0	0	0	0	
VISUAL PLACING	0	0	0	0	0	0	0	0	0	0	
GRIP STRENGTH - SEMI-QUANT.	0	0	0	0	0	0	0	0	0	0	
GRIP STRENGTH-QUANT.											
(FORELIMB) 1	660	648	652	289	638	552	669	703	631	645	
2	639	592	642	480	637	450	542	729	519	639	
3	732	698	659	664	658	622	679	617	659	677	
(HINDLIMB) 1	250	685	443	250	309	569	373	848	732	540	
2	242	487	468	322	600	921	190	212	340	220	
3	681	320	833	662	629	656	153	621	436	632	
BIZARRE BEHAVIOR	-	-	-	-	-	-	-	-	-	-	
DEFECATION	0	5	0	0	6	0	0	0	0	0	
URINATION	0	2	0	1	2	0	1	0	0	0	
SPONTANEOUS VOCALIZATIONS	3	5	6	12	24	6	4	6	4	19	

ADDITIONAL COMMENTS:

3553T

FUNCTIONAL OBSERVATIONAL BATTERY - INDIVIDUAL DATA

DATE: 5-27-88
STUDY DAY: 32
SPECIES: RAT
SEX: FEMALE

RECORDER: KEN SHEPARD
OBSERVER: LISA BERNARD
TABLE NO.: 18

STUDY NO.: 88001712
ACC. NO.: 907124
DOSE LEVEL: 0 PPM
PAGE 1 OF 4

ANIMAL NUMBERS	41	42	43	44	45	46	47	48	49	50	COMMENTS/SUMMARY
CAGESIDE OBSERVATION											
HOME CAGE ACTIVITY	0	A	A	A	S	A	A	0	0	A	
FECES AMOUNT	0	0	0	0	0	0	0	0	0	0	
FECES COLOR	0	0	0	0	0	0	0	0	0	0	
FECES CONSISTENCY	0	0	0	0	0	0	0	0	0	0	
URINE AMOUNT	0	0	0	0	0	0	0	0	0	0	
URINE COLOR	0	0	0	0	0	0	0	0	0	0	
BEHAVIOR FROM CAGE	0	0	0	0	0	0	0	0	0	0	
PHYSICAL EXAMINATION											
DEATH	-	-	-	-	-	-	-	-	-	-	
HAIR COAT	0	0	0	0	0	0	0	0	0	0	
MUCOUS MEMB./EYE/SKIN COLOR	0	0	0	0	0	0	0	0	0	0	
BODY TEMPERATURE	0	0	0	0	0	0	0	0	0	0	
RESPIRATORY RATE	0	0	0	0	0	0	0	0	0	0	
RESPIRATORY CHARACTER	0	0	0	0	0	0	0	0	0	0	
LACRIMATION	0	0	0	0	0	0	0	0	0	0	
SALIVATION AMOUNT	0	0	0	0	0	0	0	0	0	0	
SALIVATION ONSET	-	-	-	-	-	-	-	-	-	-	
EYE PROMINENCE	0	0	0	0	0	0	0	0	0	0	
PALPEBRAL CLOSURE	0	0	0	0	0	0	0	0	0	0	
CONVULSION ONSET	-	-	-	-	-	-	-	-	-	-	
TYPE OF CONVULSION	-	-	-	-	-	-	-	-	-	-	
LENGTH OF SEIZURE	-	-	-	-	-	-	-	-	-	-	
LENGTH OF POST-ICTAL PERIOD	-	-	-	-	-	-	-	-	-	-	
BITING	-	-	-	-	-	-	-	-	-	-	
TREMOR SEVERITY	-	-	-	-	-	1	-	-	-	-	
TREMOR ONSET	-	-	-	-	-	R	-	-	-	-	
HANDLING BEHAVIOR	0	0	0	0	4	0	0	0	0	0	
NEUROLOGICAL EXAMINATION											
LOCOMOTOR ACTIVITY (N=2)	2	2	2	2	2	4	2	2	2	2	
REARING ACTIVITY	0	0	0	0	0	0	0	0	0	0	
TAIL ELEVATION	0	0	0	0	0	0	0	0	0	0	
STATIC LIMB POSITION	0	0	0	0	0	0	0	0	0	0	
ABNORMAL GAIT	-	-	-	-	-	-	-	-	-	-	
HYPOTONIC GAIT - HINDLIMB	0	0	0	0	0	0	0	0	0	0	
HYPOTONIC GAIT - FORELIMB	0	0	0	0	0	0	0	0	0	0	
ATAXIC GAIT	0	0	0	0	0	0	0	0	0	0	
HEAD POSITION	0	0	0	0	0	0	0	0	0	0	
APPROACH RESPONSE (N=1)	1	1	0	0	1	0	1	0	0	1	
TOUCH RESPONSE	C	R	T	T	R	0	R	0	0	R	
AUDITORY ORIENTATION	0	A	0	A	A	A	A	A	A	A	
OLFACTORY ORIENTATION	0	A	0	A	A	0	A	A	0	A	
RIGHTING REFLEX	0	0	0	0	0	0	0	0	0	0	
PROPRIOCEPTIVE POSITIONING	0	0	0	0	0	0	0	0	0	0	
TAIL PINCH (N=A)	0	0	R	R	R	0	T	A	R	R	
ABDOMINAL TONE (N=2)	2	2	2	2	2	2	2	2	2	2	
BLADDER TONE	0	0	0	0	0	0	0	0	0	0	
MUSCLE TONE	0	0	0	0	0	0	0	0	0	0	
PASSIVE MANIPULATION	0	0	0	0	0	0	0	0	0	0	
PUPILLARY SIZE	0	0	0	0	0	0	0	0	0	0	
EYE POSITION	0	0	0	0	0	0	0	0	0	0	
NYSTAGMUS - RESTING	0	0	0	0	0	0	0	0	0	0	
NYSTAGMUS - POSITIONAL	0	0	0	0	0	0	0	0	0	0	
VISUAL ORIENTATION	P	S	0	P	P	P	P	P	P	P	
PALPEBRAL REFLEX	0	0	0	0	0	0	0	0	0	0	
PINNA TOUCH RESPONSE (N=2)	0	2	2	0	0	2	2	0	2	2	
EXTENSOR POSTURAL THRUST	0	0	0	0	0	0	0	0	0	0	
HOPPING REFLEX	0	0	0	0	0	0	0	0	0	0	
VISUAL PLACING	0	0	0	0	0	0	0	0	0	0	
GRIP STRENGTH - SEMI-QUANT.	0	0	0	0	2	0	0	0	0	0	
GRIP STRENGTH-QUANT.											
(FORELIMB) 1	659	699	645	739	688	662	654	391	584	691	
2	658	522	405	712	468	651	641	711	411	722	
3	682	565	528	769	695	680	640	455	662	770	
(HINDLIMB) 1	550	321	349	261	350	349	1011	498	984	679	
2	396	1132	458	421	938	500	1112	760	484	620	
3	387	661	308	581	469	520	724	740	395	420	
BIZARRE BEHAVIOR	-	-	-	-	-	-	-	-	-	-	
DEFECATION	0	0	0	1	0	0	0	0	0	0	
URINATION	1	0	0	2	0	0	0	0	1	0	
SPONTANEOUS VOCALIZATIONS	7	4	5	5	14	5	8	9	8	9	

ADDITIONAL COMMENTS:

FUNCTIONAL OBSERVATIONAL BATTERY - INDIVIDUAL DATA

DATE: 5-27-88
STUDY DAY: 32
SPECIES: RAT
SEX: FEMALE

RECORDER: KEN SHEPARD
OBSERVER: LISA BERNARD
TABLE NO.: 18

STUDY NO.: 88001712
ACC. NO.: 907124
DOSE LEVEL: 100 PPM
PAGE 2 OF 4

ANIMAL NUMBERS	51	52	53	54	55	56	57	58	59	60	COMMENTS/SUMMARY
CAGESIDE OBSERVATION											
HOME CAGE ACTIVITY	A	A	0	0	0	A	A	S	A	A	
FECES AMOUNT	0	0	0	0	0	0	0	0	0	0	
FECES COLOR	0	0	0	0	0	0	0	0	0	0	
FECES CONSISTENCY	0	0	0	0	0	0	0	0	0	0	
URINE AMOUNT	0	0	0	0	0	0	0	0	0	0	
URINE COLOR	0	0	0	0	0	0	0	0	0	0	
BEHAVIOR FROM CAGE	0	0	0	0	0	0	0	0	0	0	
PHYSICAL EXAMINATION											
DEATH	-	-	-	-	-	-	-	-	-	-	
HAIR COAT	0	0	0	0	0	0	0	0	0	0	
MUCOUS MEMB./EYE/SKIN COLOR	0	0	0	0	0	0	0	0	0	0	
BODY TEMPERATURE	0	0	0	0	0	0	0	0	0	0	
RESPIRATORY RATE	0	0	0	0	0	0	0	0	0	0	
RESPIRATORY CHARACTER	0	0	0	0	0	0	0	0	0	0	
LACRIMATION	0	0	0	0	0	0	0	0	0	0	
SALIVATION AMOUNT	0	0	0	0	0	0	0	0	0	0	
SALIVATION ONSET	-	-	-	-	-	-	-	-	-	-	
EYE PROMINENCE	0	0	0	0	0	0	0	0	0	0	
PALPEBRAL CLOSURE	0	0	0	0	0	0	0	0	0	0	
CONVULSION ONSET	-	-	-	-	-	-	-	-	-	-	
TYPE OF CONVULSION	-	-	-	-	-	-	-	-	-	-	
LENGTH OF SEIZURE	-	-	-	-	-	-	-	-	-	-	
LENGTH OF POST-ICTAL PERIOD	-	-	-	-	-	-	-	-	-	-	
BITING	-	-	-	-	-	-	-	-	-	-	
TREMOR SEVERITY	-	-	-	1	-	-	-	-	-	-	
TREMOR ONSET	-	-	-	R	-	-	-	-	-	-	
HANDLING BEHAVIOR	0	0	0	0	0	0	0	4	0	0	
NEUROLOGICAL EXAMINATION											
LOCOMOTOR ACTIVITY (N=2)	2	4	2	4	2	1	2	2	2	2	
REARING ACTIVITY	0	0	0	0	0	0	4	0	0	0	
TAIL ELEVATION	0	0	0	0	0	0	0	0	0	0	
STATIC LIMB POSITION	0	0	0	0	0	0	0	0	0	0	
ABNORMAL GAIT	-	-	-	-	-	-	-	-	-	-	
HYPOTONIC GAIT - HINDLIMB	0	0	0	0	0	0	0	0	0	0	
HYPOTONIC GAIT - FORELIMB	0	0	0	0	0	0	0	0	0	0	
ATAXIC GAIT	0	0	0	0	0	0	0	0	0	0	
HEAD POSITION	0	0	0	0	0	0	0	0	0	0	
APPROACH RESPONSE (N=1)	0	1	0	1	0	0	1	0	0	1	
TOUCH RESPONSE	T	R	0	T	0	0	R	A	0	R	
AUDITORY ORIENTATION	0	A	0	0	A	A	A	A	A	0	
OLFACTORY ORIENTATION	A	A	0	0	0	A	0	0	A	A	
RIGHTING REFLEX	0	0	0	0	0	0	0	0	0	0	
PROPRIOCEPTIVE POSITIONING	0	0	0	0	0	0	0	0	0	0	
TAIL PINCH (N=A)	R	R	R	0	R	R	R	R	R	R	
ABDOMINAL TONE (N=2)	2	2	2	2	2	2	2	2	2	2	
BLADDER TONE	0	0	0	0	0	0	0	0	0	0	
MUSCLE TONE	0	0	0	0	0	0	0	0	0	0	
PASSIVE MANIPULATION	0	R	0	R	0	0	0	0	0	0	
PUPILLARY SIZE	0	0	0	0	0	0	0	0	0	0	
EYE POSITION	0	0	0	0	0	0	0	0	0	0	
NYSTAGMUS - RESTING	0	0	0	0	0	0	0	0	0	0	
NYSTAGMUS - POSITIONAL	0	0	0	0	0	0	0	0	0	0	
VISUAL ORIENTATION	P	P	S	S	S	P	P	P	P	P	
PALPEBRAL REFLEX	0	0	0	0	0	0	0	0	0	0	
PINNA TOUCH RESPONSE (N=2)	2	0	0	2	2	0	4	0	2	0	
EXTENSOR POSTURAL THRUST	0	0	0	0	0	0	0	0	0	0	
HOPPING REFLEX	0	0	0	0	0	0	0	0	0	0	
VISUAL PLACING	0	0	0	0	0	0	0	0	0	0	
GRIP STRENGTH - SEMI-QUANT.	0	0	0	0	0	4	0	0	0	0	
GRIP STRENGTH-QUANT.											
(FORELIMB) 1	621	685	729	480	680	659	643	538	639	733	
2	652	665	460	658	680	670	678	669	634	461	
3	583	532	687	679	713	742	650	709	448	700	
(HINDLIMB) 1	285	809	405	408	864	399	482	610	399	849	
2	331	541	839	390	1017	465	783	796	288	741	
3	862	333	819	275	411	672	815	708	245	630	
BIZARRE BEHAVIOR	-	-	-	-	-	-	-	-	-	-	
DEFECATION	0	2	0	0	1	0	0	0	0	0	
URINATION	0	1	0	0	0	0	0	1	0	0	
SPONTANEOUS VOCALIZATIONS	6	8	5	6	5	3	9	19	5	4	

ADDITIONAL COMMENTS: Rat #51 - Alopecia on both front paws.
Rat #54 - Alopecia on both forelimbs.

FUNCTIONAL OBSERVATIONAL BATTERY - INDIVIDUAL DATA

DATE: 5-27-88
STUDY DAY: 32
SPECIES: RAT
SEX: FEMALE

RECORDER: KEN SHEPARD
OBSERVER: LISA BERNARD
TABLE NO.: 18

STUDY NO.: 880017I2
ACC. NO.: 907124
DOSE LEVEL: 200 PPM
PAGE 3 OF 4

ANIMAL NUMBERS	61	62	63	64	65	66	67	68	69	70	COMMENTS/SUMMARY
CAGESIDE OBSERVATION											
HOME CAGE ACTIVITY	A	A	A	0	A	0	0	0	A	A	
FECES AMOUNT	0	0	0	0	0	0	0	0	0	0	
FECES COLOR	0	0	0	0	0	0	0	0	0	0	
FECES CONSISTENCY	0	0	0	0	0	0	0	0	0	0	
URINE AMOUNT	0	0	0	0	0	0	0	0	0	0	
URINE COLOR	0	0	0	0	0	0	0	0	0	0	
BEHAVIOR FROM CAGE	0	0	0	0	0	0	0	0	0	0	
PHYSICAL EXAMINATION											
DEATH	-	-	-	-	-	-	-	-	-	-	
HAIR COAT	0	0	0	0	0	0	0	0	0	0	
MUCOUS MEMB./EYE/SKIN COLOR	0	0	0	0	0	0	0	0	0	0	
BODY TEMPERATURE	0	0	0	0	0	0	0	0	0	0	
RESPIRATORY RATE	0	0	0	0	0	0	0	0	0	0	
RESPIRATORY CHARACTER	0	0	0	0	0	0	0	0	0	0	
LACRIMATION	0	0	0	0	0	0	0	0	0	0	
SALIVATION AMOUNT	0	0	0	0	0	0	0	0	0	0	
SALIVATION ONSET	-	-	-	-	-	-	-	-	-	-	
EYE PROMINENCE	0	0	0	0	0	0	0	0	0	0	
PALPEBRAL CLOSURE	0	0	0	0	0	0	0	0	0	0	
CONVULSION ONSET	-	-	-	-	-	-	-	-	-	-	
TYPE OF CONVULSION	-	-	-	-	-	-	-	-	-	-	
LENGTH OF SEIZURE	-	-	-	-	-	-	-	-	-	-	
LENGTH OF POST-ICTAL PERIOD	-	-	-	-	-	-	-	-	-	-	
BITING	-	-	-	-	-	-	-	-	-	-	
TREMOR SEVERITY	-	-	-	-	-	-	-	-	-	-	
TREMOR ONSET	-	-	-	-	-	-	-	-	-	-	
HANDLING BEHAVIOR	0	0	0	0	0	0	0	0	4	0	
NEUROLOGICAL EXAMINATION											
LOCOMOTOR ACTIVITY (N=2)	2	2	4	2	2	2	2	2	2	1	
REARING ACTIVITY	0	0	0	0	0	0	0	0	0	0	
TAIL ELEVATION	0	0	0	0	0	0	0	0	0	0	
STATIC LIMB POSITION	0	0	0	0	0	0	0	0	0	0	
ABNORMAL GAIT	-	-	-	-	-	-	-	-	-	-	
HYPOTONIC GAIT - HINDLIMB	0	0	0	0	0	0	0	0	0	0	
HYPOTONIC GAIT - FORELIMB	0	0	0	0	0	0	0	0	0	0	
ATAXIC GAIT	0	0	0	0	0	0	0	0	0	0	
HEAD POSITION	0	0	0	0	0	0	0	0	0	0	
APPROACH RESPONSE (N=1)	1	0	0	1	0	0	0	1	1	0	
TOUCH RESPONSE	T	0	T	R	R	T	R	R	C	R	
AUDITORY ORIENTATION	A	A	0	A	A	A	A	A	A	0	
OLFACTORY ORIENTATION	A	A	0	0	A	0	A	A	A	A	
RIGHTING REFLEX	0	0	0	0	0	0	0	0	0	0	
PROPRIOCEPTIVE POSITIONING	0	0	0	0	0	0	0	0	0	0	
TAIL PINCH (N=A)	T	R	0	T	R	T	R	R	R	R	
ABDOMINAL TONE (N=2)	2	2	2	2	2	2	2	2	2	2	
BLADDER TONE	0	0	0	0	0	0	0	0	0	0	
MUSCLE TONE	0	0	0	0	0	0	0	0	0	0	
PASSIVE MANIPULATION	0	0	0	0	0	0	0	0	0	0	
PUPILLARY SIZE	0	0	0	0	0	0	0	0	0	0	
EYE POSITION	0	0	0	0	0	0	0	0	0	0	
NYSTAGMUS - RESTING	0	0	0	0	0	0	0	0	0	0	
NYSTAGMUS - POSITIONAL	0	0	0	0	0	0	0	0	0	0	
VISUAL ORIENTATION	P	P	P	P	P	P	P	S	P	P	
PALPEBRAL REFLEX	0	0	0	0	0	0	0	0	0	0	
PINNA TOUCH RESPONSE (N=2)	2	0	0	2	0	0	0	4	0	0	
EXTENSOR POSTURAL THRUST	0	0	0	0	0	0	0	0	0	0	
HOPPING REFLEX	0	0	0	0	0	0	0	0	0	0	
VISUAL PLACING	0	0	0	0	0	0	0	0	0	0	
GRIP STRENGTH - SEMI-QUANT.	0	0	0	0	0	0	0	0	0	0	
GRIP STRENGTH-QUANT.											
(FORELIMB) 1	679	502	670	563	673	512	828	681	778	680	
2	665	385	687	702	650	735	420	659	729	592	
3	630	490	669	590	395	418	500	562	704	705	
(HINDLIMB) 1	798	479	530	541	340	319	719	539	440	334	
2	805	461	323	422	350	466	462	372	473	441	
3	858	638	698	330	378	532	890	512	702	380	
BIZARRE BEHAVIOR	-	-	-	-	-	-	-	-	-	-	
DEFECATION	0	3	0	0	0	0	5	1	0	2	
URINATION	0	0	1	0	0	0	2	0	0	1	
SPONTANEOUS VOCALIZATIONS	4	3	10	4	6	7	9	5	17	3	

ADDITIONAL COMMENTS: Rat #66 - Alopecia on Front Limbs.

FUNCTIONAL OBSERVATIONAL BATTERY - INDIVIDUAL DATA

DATE: 5-27-88
STUDY DAY: 32
SPECIES: RAT
SEX: FEMALE

RECORDER: KEN SHEPARD
OBSERVER: LISA BERNARD
TABLE NO.: 18

STUDY NO.: 88001712
ACC. NO.: 907124
DOSE LEVEL: 400 PPM
PAGE 4 OF 4

MAL NUMBERS	71	72	73	74	75	76	77	78	79	80	COMMENTS/SUMMARY
CAGESIDE OBSERVATION											
HOME CAGE ACTIVITY	0	A	A	0	A	0	0	A	0	A	
FECES AMOUNT	0	0	0	0	0	0	0	0	0	0	
FECES COLOR	0	0	0	0	0	0	0	0	0	0	
FECES CONSISTENCY	0	0	0	0	0	0	0	0	0	0	
URINE AMOUNT	0	0	0	0	0	0	0	0	0	0	
URINE COLOR	0	0	0	0	0	0	0	0	0	0	
BEHAVIOR FROM CAGE	0	0	0	0	1	0	0	0	0	0	
PHYSICAL EXAMINATION											
DEATH	-	-	-	-	-	-	-	-	-	-	
HAIR COAT	0	0	0	0	0	0	0	0	0	0	
MUCOUS MEMB./EYE/SKIN COLOR	0	0	0	0	0	0	0	0	0	0	
BODY TEMPERATURE	0	0	0	0	0	0	0	0	0	0	
RESPIRATORY RATE	0	0	0	0	0	0	0	0	0	0	
RESPIRATORY CHARACTER	0	0	0	0	0	0	0	0	0	0	
LACRIMATION	0	0	0	0	0	0	0	0	0	0	
SALIVATION AMOUNT	0	0	0	0	0	0	0	0	0	0	
SALIVATION ONSET	-	-	-	-	-	-	-	-	-	-	
EYE PROMINENCE	0	0	0	0	0	0	0	0	0	0	
PALPEBRAL CLOSURE	0	0	0	0	0	0	0	0	0	0	
CONVULSION ONSET	-	-	-	-	-	-	-	-	-	-	
TYPE OF CONVULSION	-	-	-	-	-	-	-	-	-	-	
LENGTH OF SEIZURE	-	-	-	-	-	-	-	-	-	-	
LENGTH OF POST-ICTAL PERIOD	-	-	-	-	-	-	-	-	-	-	
BITING	-	-	-	-	-	-	-	-	-	-	
TREMOR SEVERITY	-	1	-	-	1	-	-	-	-	-	
TREMOR ONSET	-	R	-	-	R	-	-	-	-	-	
HANDLING BEHAVIOR	0	0	0	6	4	0	0	0	0	0	
NEUROLOGICAL EXAMINATION											
LOCOMOTOR ACTIVITY (N=2)	2	2	2	2	2	2	2	4	2	2	
REARING ACTIVITY	0	0	0	0	0	0	0	0	0	0	
TAIL ELEVATION	0	0	0	0	0	0	0	0	0	0	
STATIC LIMB POSITION	0	0	0	0	0	0	0	0	0	0	
ABNORMAL GAIT	-	-	-	-	-	-	-	-	-	-	
HYPOTONIC GAIT - HINDLIMB	0	0	0	0	0	0	0	0	0	0	
HYPOTONIC GAIT - FORELIMB	0	0	0	0	0	0	0	0	0	0	
ATAXIC GAIT	0	0	0	0	0	0	0	0	0	0	
HEAD POSITION	0	0	0	0	0	0	0	0	0	0	
APPROACH RESPONSE (N=1)	0	4	1	1	0	1	1	0	0	1	
TOUCH RESPONSE	0	0	T	R	T	R	R	T	R	0	
AUDITORY ORIENTATION	A	A	A	A	A	0	0	0	A	A	
OLFACTORY ORIENTATION	A	0	A	A	A	A	0	0	0	0	
RIGHTING REFLEX	0	0	0	0	0	0	0	0	0	0	
PROPRIOCEPTIVE POSITIONING	0	0	0	0	0	0	0	0	0	0	
TAIL PINCH (N=A)	J	R	0	R	R	R	0	T	T	T	
ABDOMINAL TONE (N=2)	2	2	2	2	2	2	2	2	2	2	
BLADDER TONE	0	0	0	0	0	0	0	0	0	0	
MUSCLE TONE	0	0	0	0	0	0	0	0	0	0	
PASSIVE MANIPULATION	0	0	0	0	0	0	0	0	0	0	
PUPILLARY SIZE	0	0	0	0	0	0	0	0	0	0	
EYE POSITION	0	0	0	0	0	0	0	0	0	0	
NYSTAGMUS - RESTING	0	0	0	0	0	0	0	0	0	0	
NYSTAGMUS - POSITIONAL	0	0	0	0	0	0	0	0	0	0	
VISUAL ORIENTATION	P	P	P	P	P	S	P	0	P	P	
PALPEBRAL REFLEX	0	0	0	0	0	0	0	0	0	0	
PINNA TOUCH RESPONSE (N=2)	0	2	0	0	0	0	2	2	0	0	
EXTENSOR POSTURAL THRUST	0	0	0	0	0	0	0	0	0	0	
HOPPING REFLEX	0	0	0	0	0	0	0	0	0	0	
VISUAL PLACING	0	0	0	0	0	0	0	0	0	0	
GRIP STRENGTH - SEMI-QUANT.	0	0	0	0	0	0	0	0	0	0	
GRIP STRENGTH-QUANT. (FORELIMB) 1	732	581	405	704	662	452	711	640	690	682	
2	647	722	502	241	640	721	562	631	684	675	
3	702	678	680	300	640	682	479	640	695	739	
(HINDLIMB) 1	290	400	990	315	466	759	360	638	562	750	
2	300	598	403	809	550	701	483	351	599	826	
3	1102	450	409	330	631	843	456	919	349	372	
BIZARRE BEHAVIOR	-	-	-	-	-	-	-	-	-	-	
DEFECATION	0	0	0	0	5	0	0	0	0	0	
URINATION	0	0	0	1	1	1	0	0	0	0	
SPONTANEOUS VOCALIZATIONS	4	6	4	9	16	5	7	4	3	6	

ADDITIONAL COMMENTS:

3657T

FUNCTIONAL OBSERVATIONAL BATTERY - INDIVIDUAL DATA

DATE: 6-24-88
STUDY DAY: 60
SPECIES: RAT
SEX: FEMALE

RECORDER: KEN SHEPARD
OBSERVER: LISA BERNARD
TABLE NO.: 19

STUDY NO.: 880017I2
ACC. NO.: 907124
DOSE LEVEL: 0 PPM
PAGE 1 OF 4

ANIMAL NUMBERS	41	42	43	44	45	46	47	48	49	50	COMMENTS/SUMMARY
CAGESIDE OBSERVATION											
HOME CAGE ACTIVITY	0	A	A	A	S	A	A	0	A	A	
FECES AMOUNT	0	0	0	0	0	0	0	0	0	0	
FECES COLOR	0	0	0	0	0	0	0	0	0	0	
FECES CONSISTENCY	0	0	0	0	0	0	0	0	0	0	
URINE AMOUNT	0	0	0	0	0	0	0	0	0	0	
URINE COLOR	0	0	0	0	0	0	0	0	0	0	
BEHAVIOR FROM CAGE	0	0	0	0	0	0	0	0	0	0	
PHYSICAL EXAMINATION											
DEATH	-	-	-	-	-	-	-	-	-	-	
HAIR COAT	0	0	0	0	0	0	0	0	0	0	
MUCOUS MEMB./EYE/SKIN COLOR	0	0	0	0	0	0	0	0	0	0	
BODY TEMPERATURE	0	0	0	0	0	0	0	0	0	0	
RESPIRATORY RATE	0	0	0	0	0	0	0	0	0	0	
RESPIRATORY CHARACTER	0	0	0	0	0	0	0	0	0	0	
LACRIMATION	0	0	0	0	0	0	0	0	0	0	
SALIVATION AMOUNT	0	0	0	0	0	0	0	0	0	0	
SALIVATION ONSET	-	-	-	-	-	-	-	-	-	-	
EYE PROMINENCE	0	0	0	0	0	0	0	0	0	0	
PALPEBRAL CLOSURE	0	0	0	0	0	0	0	0	0	0	
CONVULSION ONSET	-	-	-	-	-	-	-	-	-	-	
TYPE OF CONVULSION	-	-	-	-	-	-	-	-	-	-	
LENGTH OF SEIZURE	-	-	-	-	-	-	-	-	-	-	
LENGTH OF POST-ICTAL PERIOD	-	-	-	-	-	-	-	-	-	-	
BITING	-	-	-	-	-	-	-	-	-	-	
TREMOR SEVERITY	-	-	-	-	-	-	2	-	-	-	
TREMOR ONSET	-	-	-	-	-		R	-	-	-	
HANDLING BEHAVIOR	0	0	8	0	8	0	0	0	0	0	
NEUROLOGICAL EXAMINATION											
LOCOMOTOR ACTIVITY (N=2)	2	2	2	2	2	2	2	1	2	2	
REARING ACTIVITY	0	0	0	0	0	0	0	0	0	0	
TAIL ELEVATION	0	1	0	0	0	0	0	0	0	0	
STATIC LIMB POSITION	0	0	0	0	0	0	0	0	0	0	
ABNORMAL GAIT	-	-	-	-	-	-	-	-	-	-	
HYPOTONIC GAIT - HINDLIMB	0	0	0	0	0	0	0	0	0	0	
HYPOTONIC GAIT - FORELIMB	0	0	0	0	0	0	0	0	0	0	
ATAXIC GAIT	0	0	0	0	0	0	0	0	0	0	
HEAD POSITION	0	0	0	0	0	0	0	0	0	0	
APPROACH RESPONSE (N=1)	0	0	0	0	0	1	1	0	1	0	
TOUCH RESPONSE	0	T	R	0	0	0	R	0	R	R	
AUDITORY ORIENTATION	A	A	A	A	A	A	A	A	A	0	
OLFACTORY ORIENTATION	A	A	0	A	A	A	0	A	0	A	
RIGHTING REFLEX	0	0	0	0	0	0	0	0	0	0	
PROPRIOCEPTIVE POSITIONING	0	0	0	0	0	0	0	0	0	0	
TAIL PINCH (N=A)	0	T	R	R	E	R	R	R	R	R	
ABDOMINAL TONE (N=2)	4	2	2	2	4	2	2	2	2	2	
BLADDER TONE	0	0	0	0	0	0	0	0	0	0	
MUSCLE TONE	0	0	0	0	0	0	0	0	0	0	
PASSIVE MANIPULATION	0	0	R	0	0	0	0	0	0	0	
PUPILLARY SIZE	0	0	0	0	0	0	0	0	0	0	
EYE POSITION	0	0	0	0	0	0	0	0	0	0	
NYSTAGMUS - RESTING	0	0	0	0	0	0	0	0	0	0	
NYSTAGMUS - POSITIONAL	0	0	0	0	0	0	0	0	0	0	
VISUAL ORIENTATION	P	0	P	P	P	P	P	P	P	S	
PALPEBRAL REFLEX	0	0	0	0	0	0	0	0	0	0	
PINNA TOUCH RESPONSE (N=2)	2	2	0	0	0	0	0	0	2	2	
EXTENSOR POSTURAL THRUST	0	0	0	0	0	0	0	0	0	0	
HOPPING REFLEX	0	0	0	0	0	0	0	0	0	0	
VISUAL PLACING	0	0	0	0	0	0	0	0	0	0	
GRIP STRENGTH - SEMI-QUANT.	0	0	0	0	0	0	0	0	0	0	
GRIP STRENGTH-QUANT.											
(FORELIMB) 1	632	678	765	762	602	621	624	651	672	691	
2	630	681	702	702	718	628	635	668	669	709	
3	642	659	735	699	709	632	643	695	669	678	
(HINDLIMB) 1	473	739	491	509	718	405	888	382	523	818	
2	1030	670	510	532	803	654	722	534	512	350	
3	592	851	292	728	500	861	564	968	602	451	
BIZARRE BEHAVIOR	-	-	-	-	-	-	-	-	-	-	
DEFECATION	0	0	0	2	0	2	0	0	0	0	
URINATION	1	0	1	2	2	1	0	0	0	0	
SPONTANEOUS VOCALIZATIONS	4	3	20	5	24	5	4	6	3	6	

ADDITIONAL COMMENTS: Rat #44 - Alopecia - Right front paw.

3657T

FUNCTIONAL OBSERVATIONAL BATTERY - INDIVIDUAL DATA

DATE: 6-24-88
STUDY DAY: 60
SPECIES: RAT
SEX: FEMALE

RECORDER: KEN SHEPARD
OBSERVER: LISA BERNARD
TABLE NO.: 19

STUDY NO.: 88001712
ACC. NO.: 907124
DOSE LEVEL: 100 PPM
PAGE 2 OF 4

ANIMAL NUMBERS	51	52	53	54	55	56	57	58	59	60	COMMENTS/SUMMARY
CAGESIDE OBSERVATION											
HOME CAGE ACTIVITY	A	0	S	A	A	0	A	0	0	0	
FECES AMOUNT	0	0	0	0	0	0	0	0	0	0	
FECES COLOR	0	0	0	0	0	0	0	0	0	0	
FECES CONSISTENCY	0	0	0	0	0	0	0	0	0	0	
URINE AMOUNT	0	0	0	0	0	0	0	0	0	0	
URINE COLOR	0	0	0	0	0	0	0	0	0	0	
BEHAVIOR FROM CAGE	0	0	0	0	0	0	1	0	0	0	
PHYSICAL EXAMINATION											
DEATH	-	-	-	-	-	-	-	-	-	-	
HAIR COAT	0	0	0	0	0	0	0	0	0	0	
MUCOUS MEMB./EYE/SKIN COLOR	0	0	0	0	0	0	0	0	0	0	
BODY TEMPERATURE	0	0	0	0	0	0	0	0	0	0	
RESPIRATORY RATE	0	0	0	0	0	0	0	0	0	0	
RESPIRATORY CHARACTER	0	0	0	0	0	0	0	0	0	0	
LACRIMATION	0	0	0	0	0	0	0	0	0	0	
SALIVATION AMOUNT	0	0	0	0	0	0	0	0	0	0	
SALIVATION ONSET	-	-	-	-	-	-	-	-	-	-	
EYE PROMINENCE	0	0	0	0	0	0	0	0	0	0	
PALPEBRAL CLOSURE	0	0	0	0	0	0	0	0	0	0	
CONVULSION ONSET	-	-	-	-	-	-	-	-	-	-	
TYPE OF CONVULSION	-	-	-	-	-	-	-	-	-	-	
LENGTH OF SEIZURE	-	-	-	-	-	-	-	-	-	-	
LENGTH OF POST-ICTAL PERIOD	-	-	-	-	-	-	-	-	-	-	
BITING	-	-	-	-	-	-	-	-	-	-	
TREMOR SEVERITY	-	-	-	2	-	-	-	-	-	-	
TREMOR ONSET	-	-	-	R	-	-	-	-	-	-	
HANDLING BEHAVIOR	0	4	0	0	0	0	4	0	0	0	
NEUROLOGICAL EXAMINATION											
LOCOMOTOR ACTIVITY (N=2)	4	2	2	4	2	2	2	2	2	2	
REARING ACTIVITY	0	0	0	0	0	0	0	0	0	0	
TAIL ELEVATION	0	1	0	0	0	0	0	0	0	0	
STATIC LIMB POSITION	0	0	0	0	0	0	0	0	0	0	
ABNORMAL GAIT	-	-	-	-	-	-	-	-	-	-	
HYPOTONIC GAIT - HINDLIMB	0	0	0	0	0	0	0	0	0	0	
HYPOTONIC GAIT - FORELIMB	0	0	0	0	0	0	0	0	0	0	
ATAXIC GAIT	0	0	0	0	0	0	0	0	0	0	
HEAD POSITION	0	0	0	0	0	0	0	0	0	0	
APPROACH RESPONSE (N=1)	0	4	0	0	1	0	1	0	0	0	
TOUCH RESPONSE	0	0	C	0	0	0	T	R	R	R	
AUDITORY ORIENTATION	A	A	0	A	A	A	A	A	A	A	
OLFACTORY ORIENTATION	A	A	0	0	0	A	A	A	0	0	
RIGHTING REFLEX	0	0	0	0	0	0	0	0	0	0	
PROPRIOCEPTIVE POSITIONING	0	0	0	0	0	0	0	0	0	0	
TAIL PINCH (N=A)	R	R	T	T	R	R	R	T	T	A	
ABDOMINAL TONE (N=2)	2	2	2	2	2	2	2	2	2	2	
BLADDER TONE	0	0	0	0	0	0	0	0	0	0	
MUSCLE TONE	0	0	0	0	0	0	0	0	0	0	
PASSIVE MANIPULATION	0	0	0	0	0	0	0	0	0	0	
PUPILLARY SIZE	0	0	0	0	0	0	0	0	0	0	
EYE POSITION	0	0	0	0	0	0	0	0	0	0	
NYSTAGMUS - RESTING	0	0	0	0	0	0	0	0	0	0	
NYSTAGMUS - POSITIONAL	0	0	0	0	0	0	0	0	0	0	
VISUAL ORIENTATION	P	P	P	P	S	P	P	P	P	P	
PALPEBRAL REFLEX	0	0	0	0	0	0	0	0	0	0	
PINNA TOUCH RESPONSE (N=2)	2	2	2	2	2	0	0	2	0	0	
EXTENSOR POSTURAL THRUST	0	0	0	0	0	0	0	0	0	0	
HOPPING REFLEX	0	0	0	0	0	0	0	0	0	0	
VISUAL PLACING	0	0	0	0	0	0	0	0	0	0	
GRIP STRENGTH - SEMI-QUANT.	0	0	0	0	0	0	0	0	0	0	
GRIP STRENGTH-QUANT.											
(FORELIMB) 1	630	690	698	607	651	670	610	532	639	515	
2	631	675	662	612	679	668	620	680	629	692	
3	500	676	603	632	642	661	670	573	640	520	
(HINDLIMB) 1	270	351	465	902	452	390	474	375	352	358	
2	249	528	370	502	699	668	514	678	300	570	
3	805	768	661	611	597	521	374	489	429	760	
BIZARRE BEHAVIOR	-	-	-	-	-	-	-	-	-	-	
DEFECATION	0	1	0	0	0	0	0	0	0	0	
URINATION	0	1	0	0	0	0	0	0	0	0	
SPONTANEOUS VOCALIZATIONS	6	18	5	2	4	5	26	8	3	4	

ADDITIONAL COMMENTS: Rat #51 - Alopecia on forearms.
Rat #54 - Alopecia on forearms.
Rat #55 - Alopecia on forepaws.

FUNCTIONAL OBSERVATIONAL BATTERY - INDIVIDUAL DATA

DATE: 6-24-88
STUDY DAY: 60
SPECIES: RAT
SEX: FEMALE

RECORDER: KEN SHEPARD
OBSERVER: LISA BERNARD
TABLE NO.: 19

STUDY NO.: 88001712
ACC. NO.: 907124
DOSE LEVEL: 200 PPM
PAGE 3 OF 4

ANIMAL NUMBERS	61	62	63	64	65	66	67	68	69	70	COMMENTS/SUMMARY
CAGESIDE OBSERVATION											
HOME CAGE ACTIVITY	A	0	0	A	S	A	S	0	0	0	
FECES AMOUNT	0	0	0	0	0	0	0	0	0	0	
FECES COLOR	0	0	0	0	0	0	0	0	0	0	
FECES CONSISTENCY	0	0	0	0	0	0	0	0	0	0	
URINE AMOUNT	0	0	0	0	0	0	0	0	0	0	
URINE COLOR	0	0	0	0	0	0	0	0	0	0	
BEHAVIOR FROM CAGE	4	0	0	0	0	0	0	0	0	0	
PHYSICAL EXAMINATION											
DEATH	-	-	-	-	-	-	-	-	0	-	
HAIR COAT	0	0	0	0	0	0	0	0	0	0	
MUCOUS MEMB./EYE/SKIN COLOR	0	0	0	0	0	0	0	0	0	0	
BODY TEMPERATURE	0	0	0	0	0	0	0	0	0	0	
RESPIRATORY RATE	0	0	0	0	0	0	0	0	0	0	
RESPIRATORY CHARACTER	0	0	0	0	0	0	0	0	0	0	
LACRIMATION	0	0	0	0	0	0	0	0	0	0	
SALIVATION AMOUNT	0	0	0	0	0	0	0	0	0	0	
SALIVATION ONSET	-	-	-	-	-	-	-	-	-	-	
EYE PROMINENCE	0	0	0	0	0	0	0	0	0	0	
PALPEBRAL CLOSURE	0	0	0	0	0	0	0	0	0	0	
CONVULSION ONSET	-	-	-	-	-	-	-	-	-	-	
TYPE OF CONVULSION	-	-	-	-	-	-	-	-	-	-	
LENGTH OF SEIZURE	-	-	-	-	-	-	-	-	-	-	
LENGTH OF POST-ICTAL PERIOD	-	-	-	-	-	-	-	-	-	-	
BITING	-	-	-	-	-	-	-	-	-	-	
TREMOR SEVERITY	-	2	-	-	2	2	-	-	-	-	
TREMOR ONSET	-	R	-	-	R	R	-	-	-	-	
HANDLING BEHAVIOR	0	0	0	0	8	0	4	0	0	0	
NEUROLOGICAL EXAMINATION											
LOCOMOTOR ACTIVITY (N=2)	2	2	4	2	2	2	2	2	2	1	
REARING ACTIVITY	0	0	0	0	0	0	0	0	0	0	
TAIL ELEVATION	0	0	0	0	0	0	0	0	0	0	
STATIC LIMB POSITION	0	0	0	0	0	0	0	0	0	0	
ABNORMAL GAIT	-	-	-	-	-	-	-	-	-	-	
HYPOTONIC GAIT - HINDLIMB	0	0	0	0	0	0	0	0	0	0	
HYPOTONIC GAIT - FORELIMB	0	0	0	0	0	0	0	0	0	0	
ATAXIC GAIT	0	0	0	0	0	0	0	0	0	0	
HEAD POSITION	0	0	0	0	0	0	0	0	0	0	
APPROACH RESPONSE (N=1)	0	0	1	0	0	0	0	1	1	1	
TOUCH RESPONSE	R	T	T	R	T	F	R	R	R	0	
AUDITORY ORIENTATION	0	A	A	A	0	A	A	A	A	A	
OLFACTORY ORIENTATION	A	A	A	A	0	A	A	0	0	A	
RIGHTING REFLEX	0	0	0	0	0	0	0	0	0	0	
PROPRIOCEPTIVE POSITIONING	0	0	0	0	0	0	0	0	0	0	
TAIL PINCH (N=A)	R	T	R	0	T	R	R	R	R	R	
ABDOMINAL TONE (N=2)	2	2	2	2	2	2	2	2	2	2	
BLADDER TONE	0	0	0	0	0	0	0	0	0	0	
MUSCLE TONE	0	0	0	0	0	0	0	0	0	0	
PASSIVE MANIPULATION	0	0	0	0	0	0	0	0	0	0	
PUPILLARY SIZE	0	0	0	0	0	0	0	0	0	0	
EYE POSITION	0	0	0	0	0	0	0	0	0	0	
NYSTAGMUS - RESTING	0	0	0	0	0	0	0	0	0	0	
NYSTAGMUS - POSITIONAL	0	0	0	0	0	0	0	0	0	0	
VISUAL ORIENTATION	P	P	P	P	P	P	P	P	P	P	
PALPEBRAL REFLEX	0	0	0	0	0	0	0	0	0	0	
PINNA TOUCH RESPONSE (N=2)	0	0	0	0	0	0	0	2	0	0	
EXTENSOR POSTURAL THRUST	0	0	0	0	0	0	0	0	0	0	
HOPPING REFLEX	0	0	0	0	0	0	0	0	0	0	
VISUAL PLACING	0	0	0	0	0	0	0	0	0	0	
GRIP STRENGTH - SEMI-QUANT.	0	0	0	0	0	0	0	0	0	0	
GRIP STRENGTH-QUANT.											
(FORELIMB) 1	612	693	673	623	670	382	373	398	642	592	
2	622	699	697	622	661	669	695	633	732	695	
3	639	703	610	531	668	650	372	635	718	692	
(HINDLIMB) 1	1040	413	349	450	270	468	378	457	649	491	
2	289	792	592	611	532	811	233	494	253	270	
3	477	587	773	414	367	322	573	319	691	244	
BIZARRE BEHAVIOR	F	-	-	-	-	-	-	-	-	-	
DEFECATION	0	4	0	0	0	0	0	0	0	0	
URINATION	0	1	2	0	0	0	1	0	0	1	
SPONTANEOUS VOCALIZATIONS	9	3	4	3	21	3	19	2	5	3	

ADDITIONAL COMMENTS: Rat #61 - Alopecia on forearms.
Rat #61 - Scratches at right ear.
Rat #66 - Alopecia on forearms and under chin and neck.

FUNCTIONAL OBSERVATIONAL BATTERY - INDIVIDUAL DATA

DATE: 6-24-88
STUDY DAY: 60
SPECIES: RAT
SEX: FEMALE

RECORDER: KEN SHEPARD
OBSERVER: LISA BERNARD
TABLE NO.: 19

STUDY NO.: 88001712
ACC. NO.: 907124
DOSE LEVEL: 400 PPM
PAGE 4 OF 4

ANIMAL NUMBERS	71	72	73	74	75	76	77	78	79	80	COMMENTS/SUMMARY
CAGESIDE OBSERVATION											
HOME CAGE ACTIVITY	S	A	A	0	0	0	A	A	0	A	
FECES AMOUNT	0	0	0	0	0	0	0	0	0	0	
FECES COLOR	0	0	0	0	0	0	0	0	0	0	
FECES CONSISTENCY	0	0	0	0	0	0	0	0	0	0	
URINE AMOUNT	0	0	0	0	0	0	0	0	0	0	
URINE COLOR	0	0	0	0	0	0	0	0	0	0	
BEHAVIOR FROM CAGE	0	0	0	1	1	0	0	0	0	0	
PHYSICAL EXAMINATION											
DEATH	-	-	-	-	-	-	-	-	-	-	
HAIR COAT	0	0	0	0	0	0	0	0	0	0	
MUCOUS MEMB./EYE/SKIN COLOR	0	0	0	0	0	0	0	0	0	0	
BODY TEMPERATURE	0	0	0	0	0	0	0	0	0	0	
RESPIRATORY RATE	0	0	0	0	0	0	0	0	0	0	
RESPIRATORY CHARACTER	0	0	0	0	0	0	0	0	0	0	
LACRIMATION	0	0	0	0	0	0	0	0	0	0	
SALIVATION AMOUNT	0	0	0	0	0	0	0	0	0	0	
SALIVATION ONSET	-	-	-	-	-	-	-	-	-	-	
EYE PROMINENCE	0	0	0	0	0	0	0	0	0	0	
PALPEBRAL CLOSURE	0	0	0	0	0	0	0	0	0	0	
CONVULSION ONSET	-	-	-	-	-	-	-	-	-	-	
TYPE OF CONVULSION	-	-	-	-	-	-	-	-	-	-	
LENGTH OF SEIZURE	-	-	-	-	-	-	-	-	-	-	
LENGTH OF POST-ICTAL PERIOD	-	-	-	-	-	-	-	-	-	-	
BITING	-	-	-	-	-	-	-	-	-	-	
TREMOR SEVERITY	-	2	-	-	-	-	-	-	-	-	
TREMOR ONSET	-	R	-	-	-	-	-	-	-	-	
HANDLING BEHAVIOR	0	0	0	4	4	0	0	0	0	8	
NEUROLOGICAL EXAMINATION											
LOCOMOTOR ACTIVITY (N=2)	2	4	2	2	2	2	2	2	4	1	
REARING ACTIVITY	0	0	0	0	0	0	0	0	0	0	
TAIL ELEVATION	0	0	0	0	0	0	0	0	0	0	
STATIC LIMB POSITION	0	0	0	0	0	0	0	0	0	0	
ABNORMAL GAIT	-	-	-	-	-	-	-	-	-	-	
HYPOTONIC GAIT - HINDLIMB	0	0	0	0	0	0	0	0	0	0	
HYPOTONIC GAIT - FORELIMB	0	0	0	0	0	0	0	0	0	0	
ATAXIC GAIT	0	0	0	0	0	0	0	0	0	0	
HEAD POSITION	0	0	0	0	0	0	0	0	0	0	
APPROACH RESPONSE (N=1)	1	1	1	0	0	1	0	1	0	1	
TOUCH RESPONSE	T	R	T	R	R	T	R	T	R	T	
AUDITORY ORIENTATION	A	A	A	0	A	A	A	A	A	0	
OLFACTORY ORIENTATION	A	0	A	A	A	0	A	A	0	0	
RIGHTING REFLEX	0	0	0	0	0	0	0	0	0	0	
PROPRIOCEPTIVE POSITIONING	0	0	0	0	0	0	0	0	0	0	
TAIL PINCH (N=A)	T	R	R	R	R	R	R	T	T	E	
ABDOMINAL TONE (N=2)	2	2	2	2	2	2	2	2	2	2	
BLADDER TONE	0	0	0	0	0	0	0	0	0	0	
MUSCLE TONE	0	0	0	0	0	0	0	0	0	0	
PASSIVE MANIPULATION	0	0	0	R	0	0	0	0	0	0	
PUPILLARY SIZE	0	0	0	0	0	0	0	0	0	0	
EYE POSITION	0	0	0	0	0	0	0	0	0	0	
NYSTAGMUS - RESTING	0	0	0	0	0	0	0	0	0	0	
NYSTAGMUS - POSITIONAL	0	0	0	0	0	0	0	0	0	0	
VISUAL ORIENTATION	S	P	P	P	P	P	P	P	S	P	
PALPEBRAL REFLEX	0	0	0	0	0	0	0	0	0	0	
PINNA TOUCH RESPONSE (N=2)	0	0	0	2	2	0	0	0	0	0	
EXTENSOR POSTURAL THRUST	0	0	0	0	0	0	0	0	0	0	
HOPPING REFLEX	0	0	0	0	0	0	0	0	0	0	
VISUAL PLACING	0	0	0	0	0	0	0	0	0	0	
GRIP STRENGTH - SEMI-QUANT.	0	0	0	0	0	0	0	0	0	0	
GRIP STRENGTH-QUANT.											
(FORELIMB) 1	604	801	634	660	538	638	709	695	619	662	
2	630	708	640	666	488	628	699	691	623	667	
3	620	700	648	570	609	639	453	618	622	668	
(HINDLIMB) 1	423	491	677	310	808	617	303	728	384	348	
2	623	312	895	741	1111	865	528	956	779	470	
3	627	632	503	761	383	551	396	853	850	611	
BIZARRE BEHAVIOR	-	-	-	-	-	-	-	-	-	-	
DEFECATION	0	0	0	0	2	0	3	0	0	0	
URINATION	0	0	0	1	2	0	1	0	0	1	
SPONTANEOUS VOCALIZATIONS	3	3	6	22	17	4	6	6	4	27	

ADDITIONAL COMMENTS: Rat #80 - Alopecia on head.

3657T

FUNCTIONAL OBSERVATIONAL BATTERY - INDIVIDUAL DATA

DATE: 7-29-88
STUDY DAY: 95
SPECIES: RAT
SEX: FEMALE

RECORDER: KEN SHEPARD
OBSERVER: LISA BERNARD
TABLE NO.: 20

STUDY NO.: 88001712
ACC. NO.: 907124
DOSE LEVEL: 0 PPM
PAGE 1 OF 4

ANIMAL NUMBERS	41	42	43	44	45	46	47	48	49	50	COMMENTS/SUMMARY
CAGESIDE OBSERVATION											
HOME CAGE ACTIVITY	S	A	A	S	0	A	A	0	A	A	
FECES AMOUNT	0	0	0	0	0	0	0	0	0	0	
FECES COLOR	0	0	0	0	0	0	0	0	0	0	
FECES CONSISTENCY	0	0	0	0	0	0	0	0	0	0	
URINE AMOUNT	0	0	0	0	0	0	0	0	0	0	
URINE COLOR	0	0	0	0	0	0	0	0	0	0	
BEHAVIOR FROM CAGE	0	0	0	0	0	0	0	0	0	0	
PHYSICAL EXAMINATION											
DEATH	-	-	-	-	-	-	-	-	-	-	
HAIR COAT	0	0	0	0	0	0	0	0	0	0	
MUCOUS MEMB./EYE/SKIN COLOR	0	0	0	0	0	0	0	0	0	0	
BODY TEMPERATURE	0	0	0	0	0	0	0	0	0	0	
RESPIRATORY RATE	0	0	0	0	0	0	0	0	0	0	
RESPIRATORY CHARACTER	0	0	0	0	0	0	0	0	0	0	
LACRIMATION	0	0	0	0	0	0	0	0	0	0	
SALIVATION AMOUNT	0	0	0	0	0	0	0	0	0	0	
SALIVATION ONSET	-	-	-	-	-	-	-	-	-	-	
EYE PROMINENCE	0	0	0	0	0	0	0	0	0	0	
PALPEBRAL CLOSURE	0	0	0	0	0	0	0	0	0	0	
CONVULSION ONSET	-	-	-	-	-	-	-	-	-	-	
TYPE OF CONVULSION	-	-	-	-	-	-	-	-	-	-	
LENGTH OF SEIZURE	-	-	-	-	-	-	-	-	-	-	
LENGTH OF POST-ICTAL PERIOD	-	-	-	-	-	-	-	-	-	-	
BITING	-	-	-	-	-	-	-	-	-	-	
TREMOR SEVERITY	-	-	-	-	-	-	-	-	-	-	
TREMOR ONSET	-	-	-	-	-	-	-	-	-	-	
HANDLING BEHAVIOR	0	0	0	0	0	0	0	0	0	0	
NEUROLOGICAL EXAMINATION											
LOCOMOTOR ACTIVITY (N=2)	1	2	2	1	2	2	2	1	4	2	
REARING ACTIVITY	0	0	0	0	0	0	0	0	2	0	
TAIL ELEVATION	0	0	0	1	0	0	0	0	0	0	
STATIC LIMB POSITION	0	0	0	0	0	0	0	0	0	0	
ABNORMAL GAIT	-	-	-	-	-	-	*	-	-	-	*Rat 47 - Hindlimbs, walks up on toes.
HYPOTONIC GAIT - HINDLIMB	0	0	0	0	0	0	0	0	0	0	
HYPOTONIC GAIT - FORELIMB	0	0	0	0	0	0	0	0	0	0	
ATAXIC GAIT	0	0	0	0	0	0	0	0	0	0	
HEAD POSITION	0	0	0	0	0	0	0	0	0	0	
APPROACH RESPONSE (N=1)	1	0	1	0	1	1	0	0	1	0	
TOUCH RESPONSE	R	0	0	0	R	R	C	T	T	R	
AUDITORY ORIENTATION	A	A	0	A	A	0	A	A	A	0	
OLFACTORY ORIENTATION	A	A	0	A	0	0	A	A	0	A	
RIGHTING REFLEX	0	0	0	0	0	0	0	0	0	0	
PROPRIOCEPTIVE POSITIONING	0	0	0	0	0	0	0	0	0	0	
TAIL PINCH (N=A)	T	0	0	0	E	R	R	R	R	0	
ABDOMINAL TONE (N=2)	2	2	2	2	2	2	2	2	2	2	
BLADDER TONE	0	0	0	0	0	0	0	0	0	0	
MUSCLE TONE	0	0	0	0	0	0	0	0	0	0	
PASSIVE MANIPULATION	0	0	0	0	0	0	0	0	0	0	
PUPILLARY SIZE	0	0	0	0	0	0	0	0	0	0	
EYE POSITION	0	0	0	0	0	0	0	0	0	0	
NYSTAGMUS - RESTING	0	0	0	0	0	0	0	0	0	0	
NYSTAGMUS - POSITIONAL	0	0	0	0	0	0	0	0	0	0	
VISUAL ORIENTATION	S	P	P	P	P	P	S	P	P	P	
PALPEBRAL REFLEX	0	0	0	0	0	0	0	0	0	0	
PINNA TOUCH RESPONSE (N=2)	0	0	0	0	2	2	2	0	0	0	
EXTENSOR POSTURAL THRUST	0	0	0	0	0	0	0	0	0	0	
HOPPING REFLEX	0	0	0	0	0	0	0	0	0	0	
VISUAL PLACING	0	0	0	0	0	0	0	0	0	0	
GRIP STRENGTH - SEMI-QUANT.	0	0	0	0	0	0	0	0	0	0	
GRIP STRENGTH-QUANT.											
(FORELIMB) 1	1110	790	745	1048	748	1305	1758	1375	1150	995	
2	730	1085	695	1293	698	1100	1298	1183	785	1055	
3	673	895	805	1270	533	NG	1398	995	520	1198	
(HINDLIMB) 1	545	800	400	575	868	575	733	1003	438	630	
2	788	570	533	650	378	928	670	750	458	698	
3	880	518	605	635	1298	1110	1355	893	738	545	
BIZARRE BEHAVIOR	-	-	-	-	-	-	-	-	-	-	
DEFECATION	0	0	0	1	0	1	0	0	0	0	
URINATION	0	0	0	1	0	2	0	0	2	0	
SPONTANEOUS VOCALIZATIONS	4	8	9	10	16	6	4	11	2	15	

ADDITIONAL COMMENTS: NG = No Grip
Rat #44 - Alopecia on forearms.

3657T

FUNCTIONAL OBSERVATIONAL BATTERY - INDIVIDUAL DATA

DATE: 7-29-88
STUDY DAY: 95
SPECIES: RAT
SEX: FEMALE

RECORDER: KEN SHEPARD
OBSERVER: LISA BERNARD
TABLE NO.: 20

STUDY NO.: 88001712
ACC. NO.: 907124
DOSE LEVEL: 100 PPM
PAGE 2 OF 4

ANIMAL NUMBERS	51	52	53	54	55	56	57	58	59	60	COMMENTS/SUMMARY
CAGESIDE OBSERVATION											
HOME CAGE ACTIVITY	A	0	0	A	S	S	A	0	A	A	
FECES AMOUNT	0	0	0	0	0	0	0	0	0	0	
FECES COLOR	0	0	0	0	0	0	0	0	0	0	
FECES CONSISTENCY	0	0	0	0	0	0	0	0	0	0	
URINE AMOUNT	0	0	0	0	0	0	0	0	0	0	
URINE COLOR	0	0	0	0	0	0	0	0	0	0	
BEHAVIOR FROM CAGE	0	0	0	0	0	0	0	0	1	0	
PHYSICAL EXAMINATION											
DEATH	-	-	-	-	-	-	-	-	-	-	
HAIR COAT	0	0	0	0	0	0	0	0	0	0	
MUCOUS MEMB./EYE/SKIN COLOR	0	0	0	0	0	0	0	0	0	0	
BODY TEMPERATURE	0	0	0	0	0	0	0	0	0	0	
RESPIRATORY RATE	0	0	0	0	0	0	0	0	0	0	
RESPIRATORY CHARACTER	0	0	0	0	0	0	0	0	0	0	
LACRIMATION	0	0	0	0	0	0	0	0	0	0	
SALIVATION AMOUNT	0	0	0	0	0	0	0	0	0	0	
SALIVATION ONSET	-	-	-	-	-	-	-	-	-	-	
EYE PROMINENCE	0	0	0	0	0	0	0	0	0	0	
PALPEBRAL CLOSURE	0	0	0	0	0	0	0	0	0	0	
CONVULSION ONSET	-	-	-	-	-	-	-	-	-	-	
TYPE OF CONVULSION	-	-	-	-	-	-	-	-	-	-	
LENGTH OF SEIZURE	-	-	-	-	-	-	-	-	-	-	
LENGTH OF POST-ICTAL PERIOD	-	-	-	-	-	-	-	-	-	-	
BITING	-	-	-	-	-	-	-	-	-	-	
TREMOR SEVERITY	-	-	-	-	-	-	-	-	-	-	
TREMOR ONSET	-	-	-	-	-	-	-	-	-	-	
HANDLING BEHAVIOR	0	4	0	0	0	0	0	4	0	0	
NEUROLOGICAL EXAMINATION											
LOCOMOTOR ACTIVITY (N=2)	2	1	2	4	1	1	2	2	2	2	
REARING ACTIVITY	0	0	0	0	0	0	0	0	0	0	
TAIL ELEVATION	0	1	0	0	0	0	0	0	0	0	
STATIC LIMB POSITION	0	0	0	0	0	0	0	0	0	0	
ABNORMAL GAIT	-	-	-	-	-	-	-	-	-	-	
HYPOTONIC GAIT - HINDLIMB	0	0	0	0	0	0	0	0	0	0	
HYPOTONIC GAIT - FORELIMB	0	0	0	0	0	0	0	0	0	0	
ATAXIC GAIT	0	0	0	0	0	0	0	0	0	0	
HEAD POSITION	0	0	0	0	0	0	0	0	0	0	
APPROACH RESPONSE (N=1)	1	0	1	1	0	0	0	0	0	0	
TOUCH RESPONSE	0	0	0	0	0	0	R	A	0	0	
AUDITORY ORIENTATION	A	A	A	0	A	A	A	A	A	A	
OLFACTORY ORIENTATION	A	A	A	A	A	A	A	A	A	0	
RIGHTING REFLEX	0	0	0	0	0	0	0	0	0	0	
PROPRIOCEPTIVE POSITIONING	0	0	0	0	0	0	0	0	0	0	
TAIL PINCH (N=A)	T	R	0	0	R	R	R	R	A	R	
ABDOMINAL TONE (N=2)	2	2	2	2	2	2	2	2	2	2	
BLADDER TONE	0	0	0	0	0	0	0	0	0	0	
MUSCLE TONE	0	0	0	0	0	0	0	0	0	0	
PASSIVE MANIPULATION	0	0	0	0	0	0	0	R	0	0	
PUPILLARY SIZE	0	0	0	0	0	0	0	0	0	0	
EYE POSITION	0	0	0	0	0	0	0	0	0	0	
NYSTAGMUS - RESTING	0	0	0	0	0	0	0	0	0	0	
NYSTAGMUS - POSITIONAL	0	0	0	0	0	0	0	0	0	0	
VISUAL ORIENTATION	P	P	P	P	S	P	S	P	P	P	
PALPEBRAL REFLEX	0	0	0	0	0	0	0	0	0	0	
PINNA TOUCH RESPONSE (N=2)	4	0	2	0	2	0	0	0	0	0	
EXTENSOR POSTURAL THRUST	0	0	0	0	0	0	0	0	0	0	
HOPPING REFLEX	0	0	0	0	0	0	0	0	0	0	
VISUAL PLACING	0	0	0	0	0	0	0	0	0	0	
GRIP STRENGTH - SEMI-QUANT.	0	0	0	0	0	0	0	0	0	0	
GRIP STRENGTH-QUANT.											
(FORELIMB) 1	873	1383	1180	800	930	973	690	560	1075	1050	
2	853	1170	895	918	425	970	1100	523	1268	678	
3	873	980	900	553	573	830	895	1178	1278	528	
(HINDLIMB) 1	593	523	505	563	738	550	498	500	530	648	
2	828	508	888	545	760	513	423	735	730	858	
3	970	553	398	745	600	723	408	578	870	975	
BIZARRE BEHAVIOR	-	-	-	-	-	-	-	-	-	-	
DEFECATION	0	2	0	0	0	0	1	0	1	0	
URINATION	1	1	0	0	1	0	1	1	2	0	
SPONTANEOUS VOCALIZATIONS	4	15	7	3	3	2	9	18	3	6	

ADDITIONAL COMMENTS: Rat #51 - Alopecia on forearms.
Rat #54 - Alopecia on forearms.
Rat #55 - Alopecia on forearms.

FUNCTIONAL OBSERVATIONAL BATTERY - INDIVIDUAL DATA

DATE: 7-29-88
STUDY DAY: 95
SPECIES: RAT
SEX: FEMALE

RECORDER: KEN SHEPARD
OBSERVER: LISA BERNARD
TABLE NO.: 20

STUDY NO.: 88001712
ACC. NO.: 907124
DOSE LEVEL: 200 PPM
PAGE 3 OF 4

ANIMAL NUMBERS	61	62	63	64	65	66	67	68	69	70	COMMENTS/SUMMARY
CAGESIDE OBSERVATION											
HOME CAGE ACTIVITY	A	S	0	A	0	A	S	0	0	0	
FECES AMOUNT	0	0	0	0	0	0	0	0	0	0	
FECES COLOR	0	0	0	0	0	0	0	0	0	0	
FECES CONSISTENCY	0	0	0	0	0	0	0	0	0	0	
URINE AMOUNT	0	0	0	0	0	0	0	0	0	0	
URINE COLOR	0	0	0	0	0	0	0	0	0	0	
BEHAVIOR FROM CAGE	0	0	0	0	1	0	0	0	0	0	
PHYSICAL EXAMINATION											
DEATH	-	-	-	-	-	-	-	-	-	-	
HAIR COAT	0	0	0	0	0	0	0	0	0	0	
MUCOUS MEMB./EYE/SKIN COLOR	0	0	0	0	0	0	0	0	0	0	
BODY TEMPERATURE	0	0	0	0	0	0	0	0	0	0	
RESPIRATORY RATE	0	0	0	0	0	0	0	0	0	0	
RESPIRATORY CHARACTER	0	0	0	0	0	0	0	0	0	0	
LACRIMATION	0	0	0	0	0	0	0	0	0	0	
SALIVATION AMOUNT	0	0	0	0	0	0	0	0	0	0	
SALIVATION ONSET	-	-	-	-	-	-	-	-	-	-	
EYE PROMINENCE	0	0	0	0	0	0	0	0	0	0	
PALPEBRAL CLOSURE	0	0	0	0	0	0	0	0	0	0	
CONVULSION ONSET	-	-	-	-	-	-	-	-	-	-	
TYPE OF CONVULSION	-	-	-	-	-	-	-	-	-	-	
LENGTH OF SEIZURE	-	-	-	-	-	-	-	-	-	-	
LENGTH OF POST-ICTAL PERIOD	-	-	-	-	-	-	-	-	-	-	
BITING	-	-	-	-	-	-	-	-	-	-	
TREMOR SEVERITY	-	2	-	-	-	-	-	-	-	-	
TREMOR ONSET	-	R	-	-	-	-	-	-	-	-	
HANDLING BEHAVIOR	0	0	0	0	8	0	0	0	0	0	
NEUROLOGICAL EXAMINATION											
LOCOMOTOR ACTIVITY (N=2)	2	2	4	2	2	2	2	2	2	2	
REARING ACTIVITY	0	0	0	0	0	0	0	0	0	0	
TAIL ELEVATION	0	0	0	0	0	0	0	0	0	0	
STATIC LIMB POSITION	0	0	0	0	0	0	0	0	0	0	
ABNORMAL GAIT	-	-	-	-	-	-	-	-	-	-	
HYPOTONIC GAIT - HINDLIMB	0	0	0	0	0	0	0	0	0	0	
HYPOTONIC GAIT - FORELIMB	0	0	0	0	0	0	0	0	0	0	
ATAXIC GAIT	0	0	0	0	0	0	0	0	0	0	
HEAD POSITION	0	0	0	0	0	0	0	0	0	0	
APPROACH RESPONSE (N=1)	1	0	1	1	0	1	0	4	1	1	
TOUCH RESPONSE	R	C	0	R	C	T	0	T	T	T	
AUDITORY ORIENTATION	0	A	0	A	A	A	0	0	A	A	
OLFACTORY ORIENTATION	0	A	0	A	A	A	A	A	A	0	
RIGHTING REFLEX	0	0	0	0	0	0	0	0	0	0	
PROPRIOCEPTIVE POSITIONING	0	0	0	0	0	0	0	0	0	0	
TAIL PINCH (N=A)	R	A	R	R	R	0	R	E	R	0	
ABDOMINAL TONE (N=2)	2	2	2	2	2	2	1	2	2	2	
BLADDER TONE	0	0	0	0	0	0	0	0	0	0	
MUSCLE TONE	0	0	0	0	0	0	0	0	0	0	
PASSIVE MANIPULATION	0	0	R	0	0	0	0	R	0	0	
PUPILLARY SIZE	0	0	0	0	0	0	0	0	0	0	
EYE POSITION	0	0	0	0	0	0	0	0	0	0	
NYSTAGMUS - RESTING	0	0	0	0	0	0	0	0	0	0	
NYSTAGMUS - POSITIONAL	0	0	0	0	0	0	0	0	0	0	
VISUAL ORIENTATION	P	P	P	S	P	P	P	S	P	P	
PALPEBRAL REFLEX	0	0	0	0	0	0	0	0	0	0	
PINNA TOUCH RESPONSE (N=2)	0	0	0	0	0	2	0	0	0	0	
EXTENSOR POSTURAL THRUST	0	0	0	0	0	0	0	0	0	0	
HOPPING REFLEX	0	0	0	0	0	0	0	0	0	0	
VISUAL PLACING	0	0	0	0	0	0	0	0	0	0	
GRIP STRENGTH - SEMI-QUANT.	0	0	0	0	0	0	0	0	0	0	
GRIP STRENGTH-QUANT.											
(FORELIMB) 1	1465	745	1098	900	733	628	1228	535	438	1033	
2	1068	1430	860	470	953	628	1048	670	405	815	
3	1180	1028	795	795	NG	553	705	705	858	968	
(HINDLIMB) 1	870	520	508	1105	950	505	595	840	448	480	
2	1328	463	695	548	808	628	408	793	420	478	
3	675	1043	675	530	545	753	725	580	683	858	
BIZARRE BEHAVIOR	-	-	-	-	-	-	-	-	-	-	
DEFECATION	0	4	2	0	0	0	0	0	0	3	
URINATION	0	1	2	0	0	0	2	0	2	1	
SPONTANEOUS VOCALIZATIONS	4	11	13	6	30	2	12	7	2	2	

ADDITIONAL COMMENTS: Rat #61 - Alopecia on forearms.
Rat #66 - Alopecia on forearms and chest.
NG = No Grip

FUNCTIONAL OBSERVATIONAL BATTERY - INDIVIDUAL DATA

DATE: 7-29-88
STUDY DAY: 95
SPECIES: RAT
SEX: FEMALE

RECORDER: KEN SHEPARD
OBSERVER: LISA BERNARD
TABLE NO.: 20

STUDY NO.: 88001712
ACC. NO.: 907124
DOSE LEVEL: 400 PPM
PAGE 4 OF 4

MAL NUMBERS	71	72	73	74	75	76	77	78	79	80	COMMENTS/SUMMARY
LAGESIDE OBSERVATION											
HOME CAGE ACTIVITY	S	0	A	S	A	0	0	A	0	A	
FECES AMOUNT	0	0	0	0	0	0	0	0	0	0	
FECES COLOR	0	0	0	0	0	0	0	0	0	0	
FECES CONSISTENCY	0	0	0	0	0	0	0	0	0	0	
URINE AMOUNT	0	0	0	0	0	0	0	0	0	0	
URINE COLOR	0	0	0	0	0	0	0	0	0	0	
BEHAVIOR FROM CAGE	0	0	0	0	1	0	0	0	0	0	
PHYSICAL EXAMINATION											
DEATH	-	-	-	-	-	-	-	-	-	-	
HAIR COAT	0	0	0	0	0	0	0	0	0	0	
MUCOUS MEMB./EYE/SKIN COLOR	0	0	0	0	0	0	0	0	0	0	
BODY TEMPERATURE	0	0	0	0	0	0	0	0	0	0	
RESPIRATORY RATE	0	0	0	0	0	0	0	0	0	0	
RESPIRATORY CHARACTER	0	0	0	0	0	0	0	0	0	0	
LACRIMATION	0	0	0	0	0	0	0	0	0	0	
SALIVATION AMOUNT	0	0	0	0	0	0	0	0	0	0	
SALIVATION ONSET	-	-	-	-	-	-	-	-	-	-	
EYE PROMINENCE	0	0	0	0	0	0	0	0	0	0	
PALPEBRAL CLOSURE	0	0	0	0	0	0	0	0	0	0	
CONVULSION ONSET	-	-	-	-	-	-	-	-	-	-	
TYPE OF CONVULSION	-	-	-	-	-	-	-	-	-	-	
LENGTH OF SEIZURE	-	-	-	-	-	-	-	-	-	-	
LENGTH OF POST-ICTAL PERIOD	-	-	-	-	-	-	-	-	-	-	
BITING	-	-	-	-	-	-	-	-	-	-	
TREMOR SEVERITY	-	-	-	-	-	-	-	-	-	-	
TREMOR ONSET	-	-	-	-	-	-	-	-	-	-	
HANDLING BEHAVIOR	0	0	8	8	4	0	0	0	0	8	
NEUROLOGICAL EXAMINATION											
LOCOMOTOR ACTIVITY (N=2)	1	2	1	2	2	2	2	2	4	1	
REARING ACTIVITY	0	0	0	0	0	0	0	0	0	0	
TAIL ELEVATION	0	0	0	0	0	0	0	0	0	0	
STATIC LIMB POSITION	0	0	0	0	0	0	0	0	0	0	
ABNORMAL GAIT	-	-	-	-	-	-	-	-	-	-	
HYPOTONIC GAIT - HINDLIMB	0	0	0	0	0	0	0	0	0	0	
HYPOTONIC GAIT - FORELIMB	0	0	0	0	0	0	0	0	0	0	
ATAXIC GAIT	0	0	0	0	0	0	0	0	0	0	
HEAD POSITION	0	0	0	0	0	0	0	0	0	0	
APPROACH RESPONSE (N=1)	0	1	1	1	0	1	1	0	0	0	
TOUCH RESPONSE	R	0	0	0	0	C	R	0	0	0	
AUDITORY ORIENTATION	0	0	A	0	A	0	A	A	0	0	
OLFACTORY ORIENTATION	A	0	A	A	A	0	A	A	0	A	
RIGHTING REFLEX	0	0	0	0	0	0	0	0	0	0	
PROPRIOCEPTIVE POSITIONING	0	0	0	0	0	0	0	0	0	0	
TAIL PINCH (N=A)	R	R	0	R	R	T	R	0	T	0	
ABDOMINAL TONE (N=2)	2	1	2	2	2	2	2	2	2	2	
BLADDER TONE	0	0	0	0	0	0	0	0	0	0	
MUSCLE TONE	0	0	0	0	0	0	0	0	0	0	
PASSIVE MANIPULATION	0	0	0	R	0	0	0	0	0	R	
PUPILLARY SIZE	0	0	0	0	0	0	0	0	0	0	
EYE POSITION	0	0	0	0	0	0	0	0	0	0	
NYSTAGMUS - RESTING	0	0	0	0	0	0	0	0	0	0	
NYSTAGMUS - POSITIONAL	0	0	0	0	0	0	0	0	0	0	
VISUAL ORIENTATION	P	P	S	P	P	P	P	P	P	P	
PALPEBRAL REFLEX	0	0	0	0	0	0	0	0	0	0	
PINNA TOUCH RESPONSE (N=2)	0	0	2	0	4	0	4	0	0	0	
EXTENSOR POSTURAL THRUST	0	0	0	0	0	0	0	0	0	0	
HOPPING REFLEX	0	0	0	0	0	0	0	0	0	0	
VISUAL PLACING	0	0	0	0	0	0	0	0	0	0	
GRIP STRENGTH - SEMI-QUANT.	0	0	0	0	0	0	0	0	0	0	
GRIP STRENGTH-QUANT.											
(FORELIMB) 1	928	553	1288	1280	1598	745	995	1000	1103	1050	
2	960	573	748	1445	1398	565	743	1110	1358	853	
3	900	970	930	1445	1030	683	1025	1148	1200	1200	
(HINDLIMB) 1	530	568	653	548	518	810	605	973	760	470	
2	495	703	848	875	1520	700	425	828	963	660	
3	923	580	505	588	900	493	495	688	655	1175	
BIZARRE BEHAVIOR	-	-	-	-	-	-	-	-	-	-	
DEFECATION	0	0	0	0	1	0	3	0	0	0	
URINATION	0	1	1	0	1	1	1	0	0	0	
SPONTANEOUS VOCALIZATIONS	1	2	31	29	22	4	7	3	1	26	

ADDITIONAL COMMENTS: Rat #78 - Alopecia on forepaws.

FOB Statistical Analysis
Battery Observations
Study Numbers 880017I1 and 880017I2
Acc. Number 907124

Background:

Statistical analyses were conducted to identify statistically significant functional observational battery differences. The study was a neurotoxicity study. Male and female albino rats were exposed to three concentrations of ethylene glycol monopropyl ether or conditioned air and were observed pre-exposure and at 4, 10, 32, 60 and 95 days of treatment for behavioral effects using a functional observational battery. Data were collected, tabulated and examined separately by sex. The behavioral signs in the treatment groups which appeared different from the control group were analyzed statistically using contingency table methods and Dunnett's t test, modified for proportions. Loglinear models were fit to the three-way tables and significant effects were determined. Both goodness of fit and statistical significance were detected using an alpha of 0.05. If significant dose-behavioral sign and/or time-behavioral sign interactions were detected, then Dunnett's t test (one-sided) was used to compare control incidence to the treatment groups' incidence at each FOB exam. If interactions in some tables were of interest or were close to the significance level, but yet statistically nonsignificant, Dunnett's t test was used to examine these tables also.

Results:

No significant dose-time interactions were detected in the contingency tables, because all the animals were observed at every FOB exam.

Significant, or nearly so, time-behavioral sign interactions for at least one sex were detected in the following behavioral signs:

Males (p value)	Females (p value)
olfactory orientation (0.0000)	olfactory orientation (0.0000)
touch response (0.0173)	touch response (0.0002)
visual orientation (0.0000)	visual orientation (0.0000)
approach response (0.0165)	approach response (0.0201)
pinna touch response (0.0000)	pinna touch response (0.0000)
locomotor activity (0.0001)	auditory orientation (0.0116)
tail elevation (0.0004)	locomotor activity (0.0544)
rearing activity (0.0097)	abdominal tone (0.0000)
	handling behavior (0.0265)
	tail pinch (0.0763)

Significant, or nearly so, dose-behavioral sign interactions for at least one sex were detected in the following behavioral signs:

Males (p value)	Females (p value)
pinna touch response (0.0161)	pinna touch response (0.0096)
auditory orientation (0.0456)	

Dunnett's t test detected the following significant control vs treatment differences for each FOB exam. On several occasions, statistical significance was borderline or barely nonsignificant, and these differences are also mentioned. Some behavioral signs had no significant differences per FOB exam, even though their interactions over the entire study were significant. This occurred because the power of Dunnett's test at each FOB exam was less than the power of Dunnett's test for interaction significance for the entire table.

1) Male tail elevation - No statistically significant differences were detected for individual exams.

2) Male Rearing Activity - No statistically significant differences were detected for individual exams.

3) Olfactory Orientation - No statistically significant differences were detected for either males or females, for individual exam.

4) Touch Response - No statistically significant differences were detected for male rats' individual exams. For female rats exposed to 200 ppm at day 4, a significantly higher incidence of no response was detected, compared to female control rats. At day 10, female rats exposed to 400 ppm had a significantly higher incidence of no response than did female control rats. At day 60, however, female rats exposed to 400 ppm had a significantly lower incidence of no response than did female control rats. At day 95, female rats exposed to 100 ppm had a significantly higher incidence of no response than did female control rats.

5) Visual Orientation - No statistically significant differences were detected for female rats' individual exams. For male rats, at day 10, rats exposed to 100 or 200 ppm had significantly higher incidences of no response than did male control rats. At day 32, rats exposed to 200 ppm had significantly higher incidences of no reponse and significantly lower incidences of "orientation to object only after object is well into visual field" than did male control rats. At day 95, male rats exposed to 100 or 200 ppm had significantly higher incidences of no response than did male control rats.

6) Auditory Orientation - No statistically significant differences were detected for female rats' individual FOB exams. At day 95, male rats exposed to 100 or 200 ppm had significantly lower incidences of response than did male control rats.

7) Female Tail Pinch - No statistically significant differences were detected for individual FOB exams.

8) Female Abdominal Tone - Borderline nonsignificant differences were detected at days 4 and 60. At day 4, female rats exposed to 400 ppm had lower incidences of slight resistance than did control rats. At day 60, rats exposed to 100, 200 or 400 ppm had higher incidences of slight resistance than did control rats.

9) Female Handling Behavior - At day 95, rats exposed to 400 ppm had significantly lower incidences of "normally alert" and significantly higher incidences of "attempts to escape, may vocalize or bite", compared to controls.

10) Approach Response - For male rats, there were some pre-exposure significant differences detected. Male rats allotted to the 100 and 400 ppm groups had significantly higher incidences of no response compared to male controls. At day 4, male rats exposed to 100 ppm had a barely nonsignificant higher incidence of jumping than did male control rats. At day 32, male rats exposed to 400 ppm had a significantly lower incidence of sniffing than did male control rats (in fact, the incidence was 0). These male rats also had a barely nonsignificant increase in pulling away, compared to male controls, at this time. At day 60, male rats exposed to 400 ppm had significantly higher incidences of no response and significantly lower incidences of sniffing compared to male controls. For female rats, pre-exposure significant differences were also detected in the female rats allotted to 100 and 200 ppm groups. Female rats in the 100 ppm group had significantly higher incidences of no response and significantly lower responses of sniffing than did female control rats. Female rats in the 200 ppm group had signficantly lower incidences of sniffing and significantly higher incidences of pulling away than did female control rats. At day 10, female rats exposed to 200 ppm had significantly higher incidences of sniffing than did female control rats. Also, barely nonsignificantly lower incidences of freezing were detected in female rats exposed to 100, 200 or 400 ppm compared to female controls.

11) Pinna Touch Response - At day 32, male rats exposed to 100 ppm had significantly lower incidences of twitching than did male control rats. At day 10, barely nonsignificant lower incidences of twitching were detected in female rats exposed to 400 ppm compared to female controls.

12) Locomotor Activity - At day 32, barely nonsignificant higher incidences of casual movement were detected in male rats exposed to 400 ppm compared to male control rats. No individual FOB exam statistically significant differences were not detected for female rats.

Conclusions:

Many of the reported significant differences were occasional in occurrence and were probably not compound related.

References:

1) Bishop, Y.M.M, S.E Fienberg and P.W. Holland - DISCRETE MULTIVARIATE ANALYSIS, MIT Press, Cambridge, Mass. 1975

2) Winer, B.J. - STATISTICAL PRINCIPLES IN EXPERIMENTAL DESIGN, Second Edition, McGraw-Hill, New York, New York 1971

3) Ipsen J. and Fel, P. - BANCROFT'S INTRODUCTION TO BIOSTATISTICS, Harper & Row, New York, New York 1970

Merrilee Ritter 6/29/89

Merrilee Ritter
MQA/QTAS
2-320-KP
x 85912

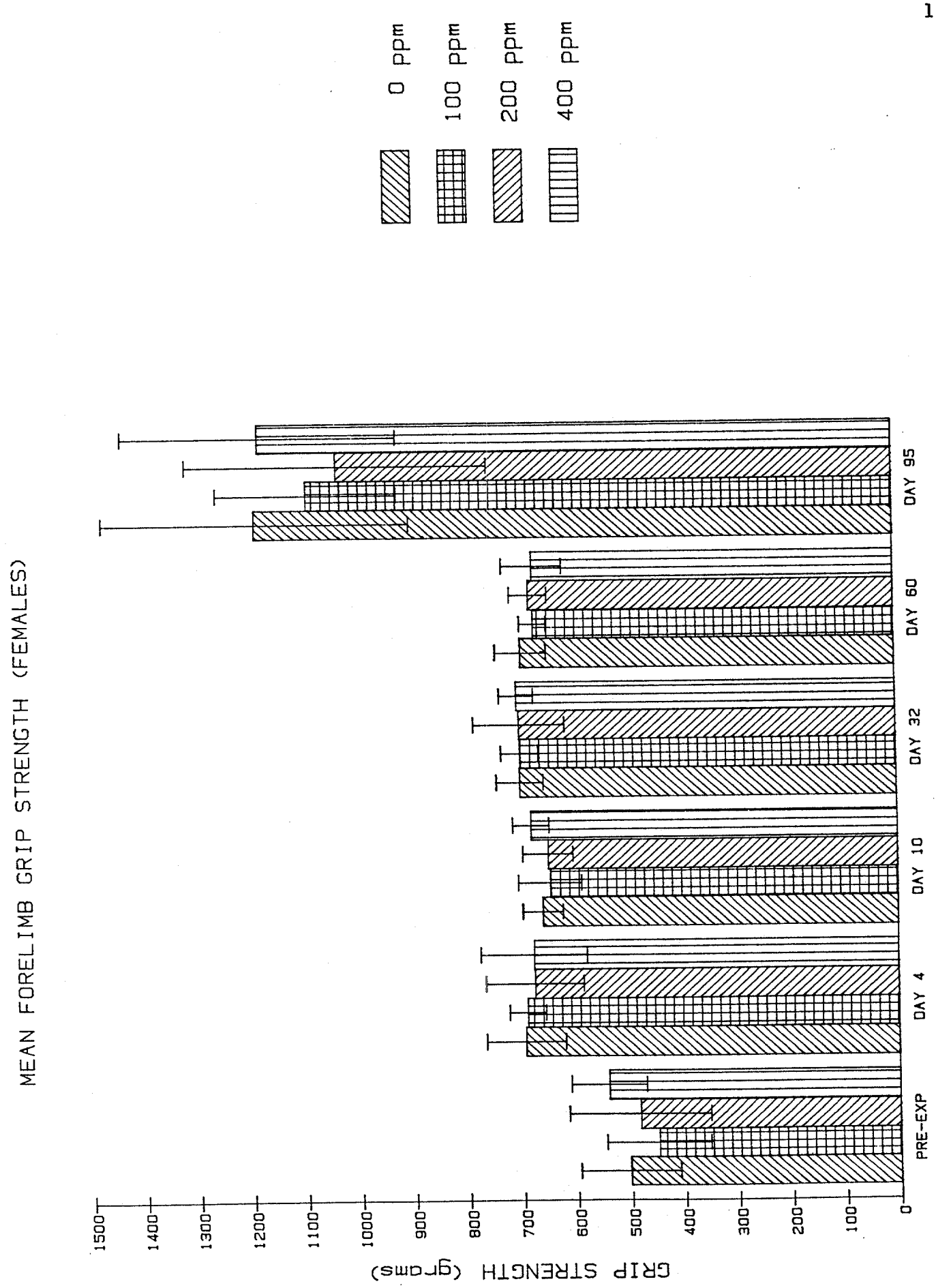
MEAN FORELIMB GRIP STRENGTH (FEMALES)
0 ppm
100 ppm
200 ppm
400 ppm
GRIP STRENGTH (grams)
1500
1400
1300
1200
1100
1000
900
800
700
600
500
400
300
200
100
0
PRE-EXP
DAY 4
DAY 10
DAY 32
DAY 60
DAY 95

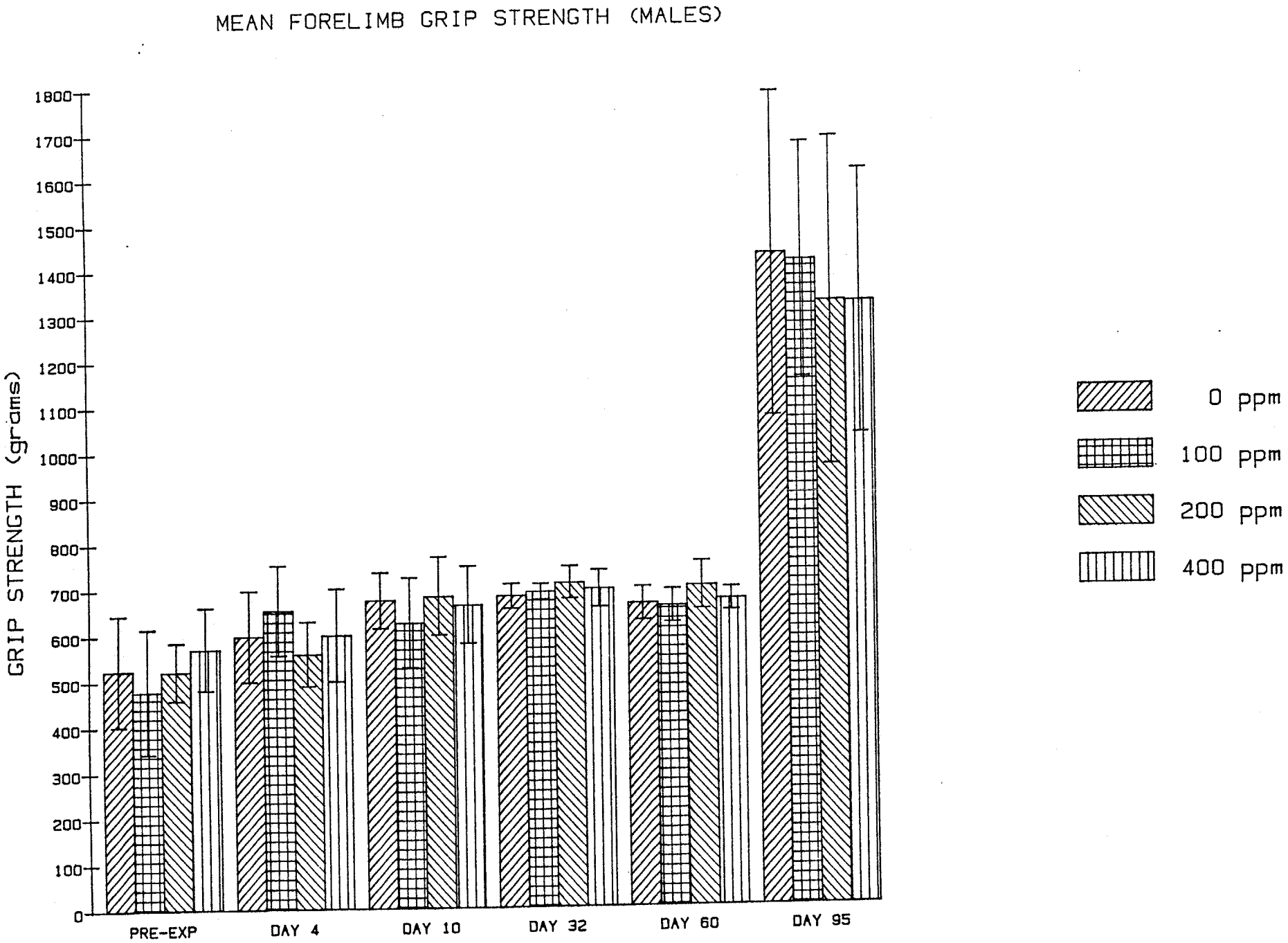
MEAN FORELIMB GRIP STRENGTH (MALES)
GRIP STRENGTH (grams)
1800
1700
1600
1500
1400
1300
1200
1100
1000
900
800
700
600
500
400
300
200
100
0
PRE-EXP
DAY 4
DAY 10
DAY 32
DAY 60
DAY 95
0 ppm
100 ppm
200 ppm
400 ppm

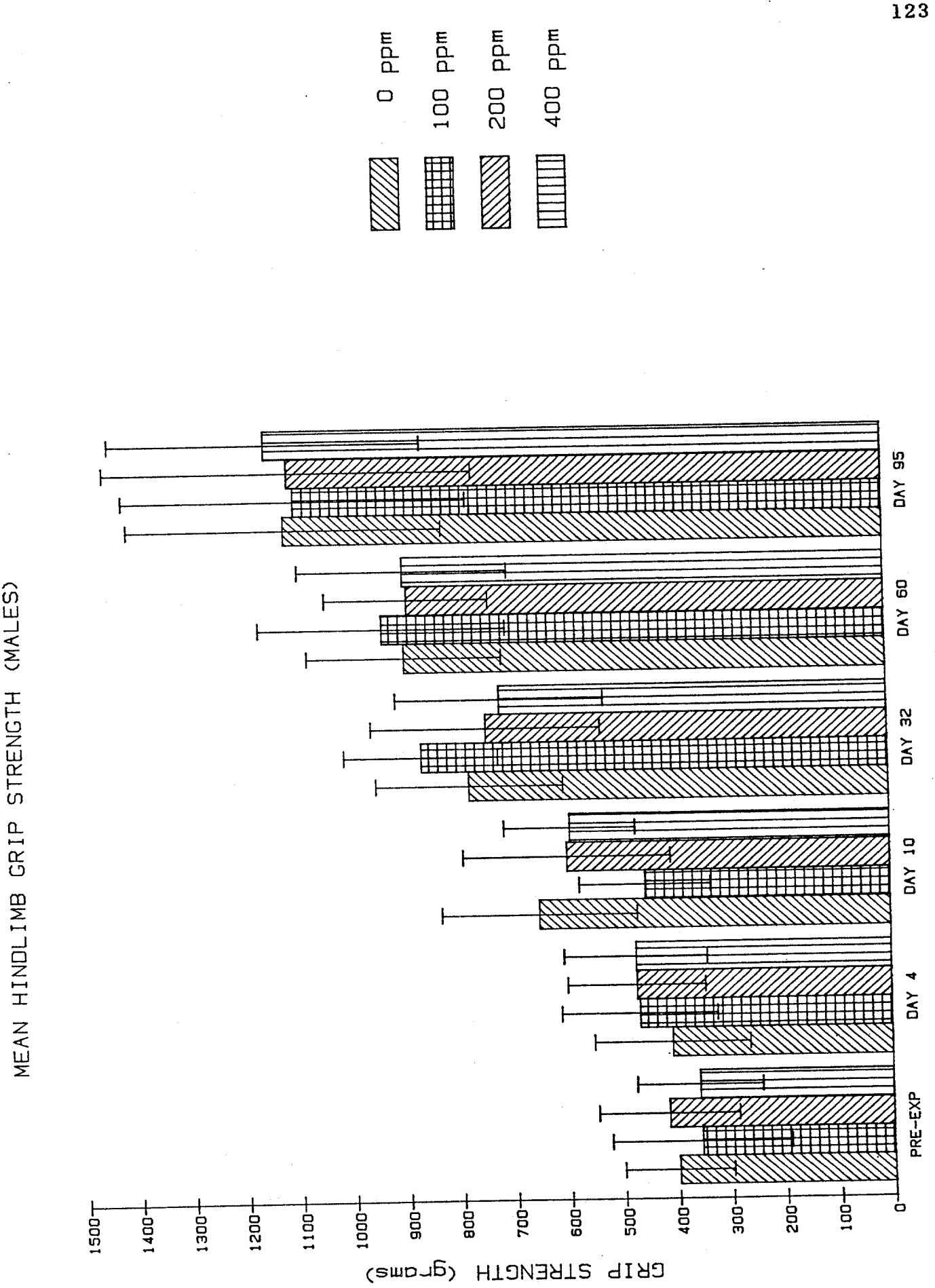
MEAN HINDLIMB GRIP STRENGTH (MALES)
0 ppm
100 ppm
200 ppm
400 ppm
GRIP STRENGTH (grams)
1500
1400
1300
1200
1100
1000
900
800
700
600
500
400
300
200
100
0
PRE-EXP
DAY 4
DAY 10
DAY 32
DAY 60
DAY 95

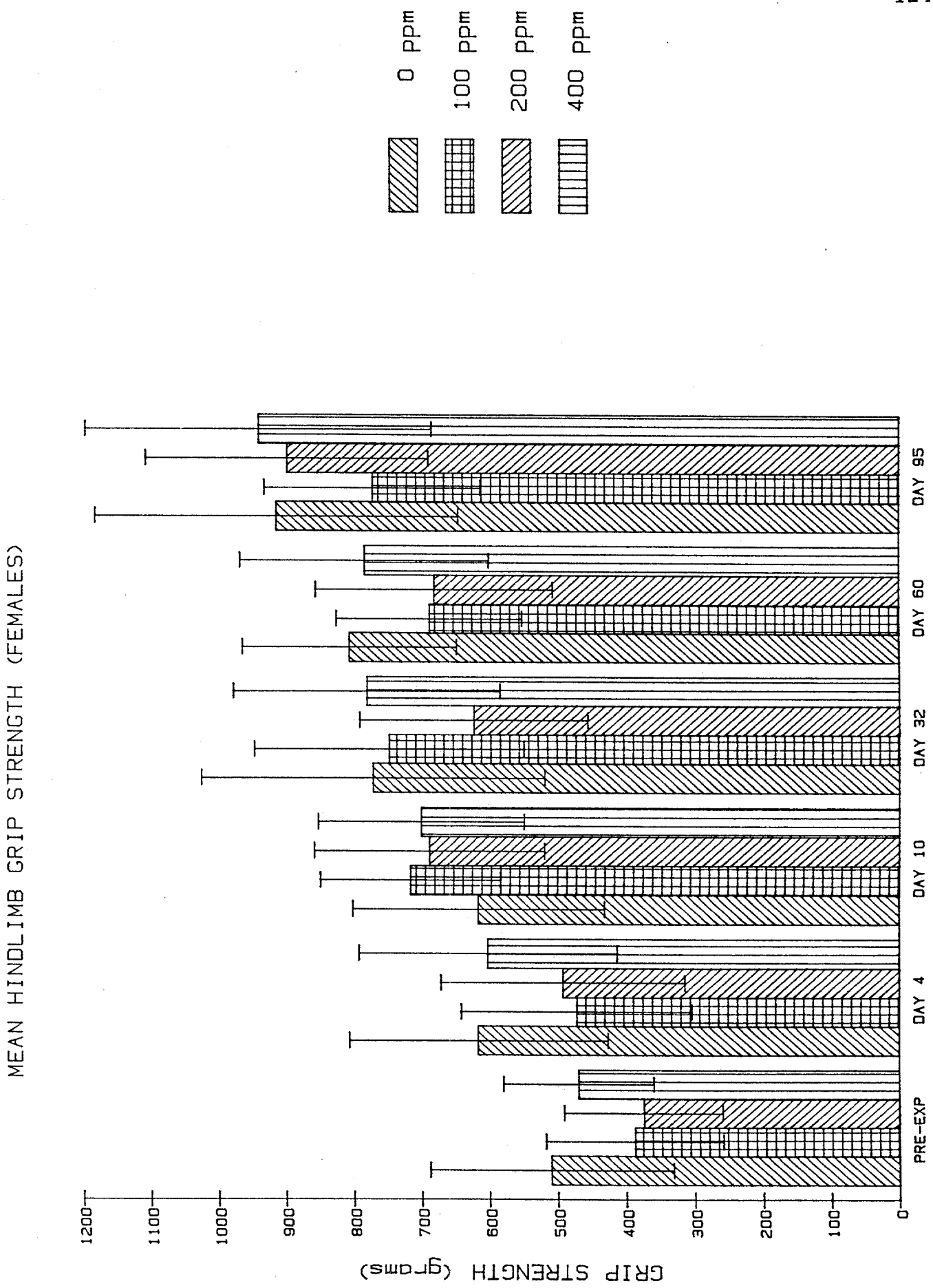
MEAN HINDLIMB GRIP STRENGTH (FEMALES)
0 ppm
100 ppm
200 ppm
400 ppm
GRIP STRENGTH (grams)
0
100
200
300
400
500
600
700
800
900
1000
1100
1200
PRE-EXP
DAY 4
DAY 10
DAY 32
DAY 60
DAY 95

SUMMARY OF EXPOSURE CONDITIONS

EXPERIMENT # 880017I1 | EXPERIMENT START DATE: 18-APR-88 | COMPOUND # 88-0017 ACCESSION NUMBER 907124

TARGET CONCENTRATION	0.000 PPM M	100.000 PPM M	200.000 PPM M	400.000 PPM M
NUMBER OF EXPOSURES	66 - 68	66 - 68	66 - 68	66 - 68
ANALYZED CONCENTRATION (PPM)	0 A 0 B 661 C	100 7 670	203 7 669	402 7 668
EXTREMES OF DAILY MEANS	0 - 0	88 - 107	177 - 213	389 - 421
NOMINAL CONCENTRATION (PPM)	0 0 68	111 4 68	195 10 68	392 9 68
TEMPERATURE (°C)	22.2 0.6 816	22.2 0.6 816	22.0 0.5 816	22.4 0.7 816
RELATIVE HUMIDITY (%)	54.0 2.9 816	61.4 2.9 816	63.3 3.6 816	59.8 4.0 816

KEY: A = MEAN VALUE
B = ± STANDARD DEVIATION
C = NUMBER OF VALUES PER GROUP

SUMMARY OF EXPOSURE CONDITIONS

EXPERIMENT # 88001712 | EXPERIMENT START DATE: 25-APR-88 | COMPOUND # 88-0017 ACCESSION NUMBER 907124

TARGET CONCENTRATION	0.000 PPM F	100.000 PPM F	200.000 PPM F	400.000 PPM F
NUMBER OF EXPOSURES	66 - 68	66 - 68	66 - 68	66 - 68
ANALYZED CONCENTRATION (PPM)	0 A 0 B 667 C	100 5 665	202 7 663	402 6 668
EXTREMES OF DAILY MEANS	0 - 0	88 - 107	177 - 212	389 - 421
NOMINAL CONCENTRATION (PPM)	0 0 68	111 3 68	197 11 68	391 9 68
TEMPERATURE (°C)	22.2 0.6 816	22.3 0.6 816	22.0 0.5 816	22.5 0.7 816
RELATIVE HUMIDITY (%)	54.2 3.1 816	61.5 3.0 816	63.9 3.6 816	59.6 3.9 816

KEY: A = MEAN VALUE
B = ± STANDARD DEVIATION
C = NUMBER OF VALUES PER GROUP

Generation, Sampling and Analysis of Test Atmosphere

Test Atmosphere Generation

Ethylene glycol monopropyl ether (EP) was metered by a FMI Fluid Metering Pump Model No. RP-SY, (Fluid Metering, Inc., Oyster Bay, NY) from a graduated cylinder reservoir, into a glass distilling column (7/8" x 15", Ace Glass Inc., Vineland, NJ). The liquid trickled over the surface of tightly packed glass beads (4 mm diameter) within the column. Compressed air (Kodak Park Utilities Division) metered at 9, 24, 28, 33 L/min for the 0, 100, 200, and 400 ppm chamber, respectively, was passed through an indicating silica gel drier and an oil filter (Deltech Engineering Inc., New Castle, DE). The dried, oil-free air entered the column and passed over the surface of the glass beads. Vapor temperature was measured in a round bottom flask as it exhausted the distilling column and was maintained at ambient conditions. The liquid delivery rate and compressed airflow rate were adjusted to produce the desired chamber target vapor concentration. The resultant vapor was directed via glass tubing to a tee just upstream of the 4.2 m^3 inhalation chamber where it was mixed with filtered, conditioned exterior dilution air (840 liters per minute total airflow) to produce 12 air changes per hour. The chamber effluent air was filtered through HEPA and charcoal filters. A diagram of the generating system may be found on Appendix pp. 131.

Vapor Analysis

Chamber vapor concentrations were monitored with an automated multipositional air sampling and analysis system. The system consisted of a MIRAN® IA infrared gas analyzer (Wilks Foxboro Analytical, South Norwalk, CT), a Perkin-Elmer SIGMA 15 data station, and a four-port multipositional environmental sampling valve (Valco Instruments, Houston, TX). The system was configured as shown on Appendix pp. 132.

Chamber vapor samples were continuously collected, from a fixed reference position within each chamber, through the four port valve using TEFLON® tubing (3/16" ID). The voltage output of a sampled atmosphere was integrated over a one minute interval following a five minute flushing period. The Perkin-Elmer SIGMA 15 data station calculated the vapor concentration by analog-to-digital conversion and linear interpolation between selected calibration data points. These data points reside in an Automated Animal Toxicology System (AATS) computer file (SOP TS 520) and were determined by the procedure described in a subsequent section "MIRAN® IA Infrared Analyzer Operating Parameters and Calibration" (Appendix pp. 129). An AATS program called "MIRAN", is used by the SIGMA 15 microprocessor for automated storage and retrieval of calibration data. Vapor concentration is calculated by simple linear interpolation between specific data points on the calibration curve. Then the multipositional environmental sampling valve was automatically advanced to the next valve position, and the procedure repeated until termination of the six hour exposure.

The nominal concentration was calculated by dividing the amount of EP consumed from the graduated reservoir (determined volumetrically), by the total chamber air flow using the formula:

$$C = \frac{(V_1)(\rho)(MV)(10^6)}{(V_2)(MW)}$$

where:
- C = concentration (PPM)
- V_1 = amount of EP vaporized (mL)
- ρ = EP density (0.913 g/mL)
- V_2 = total daily chamber air flow (302400 L)
- MV = molar volume at 1 atm and 25°C (24.45 L/mole)
- MW = EP molecular weight (104.15 g/mole)

Total chamber flow was monitored via a MAGNEHELIC® gauge (Dwyer Instruments, Inc., Michigan City, IN) which measured the differential pressure across an orifice located in the chamber exhaust duct. The chamber flow corresponding to the gauge value was determined weekly, using a TSI Air Velocity Meter (Model 1650; Equip. I.D. No. 285760) to determine the linear velocity of the supply air. From the linear velocity of the supply air, the mass flow (L/min) was calculated from the following formula:

$$Q = (A)(V)/1000$$

where:
- Q = Supply air flow rate (L/min)
- A = Cross sectional area of the air supply duct (cm^2) [3.14159][(2 in.)(2.54 cm/in.)]^2
- V = Supply air linear velocity (cm/min) [(TSI Meter Value)(12 in./ft)(2.54 cm/in.)]
- 1000 = Conversion from cm^3 to L

The chamber was maintained at a negative pressure of 0.5 inch of water (gauge).

Aerosol Measurements

A Royco Model 225 or Model 4100 Aerosol Particle Counter (HIAC/Royco Instruments Division, Pacific Scientific, Menlo Park, CA) was used to measure nongaseous airborne material within the inhalation chamber. The particle counter sampled the chamber atmosphere once each week during exposure from a fixed reference position at 0.01 cfm for one minute, and counted airborne particles greater than 0.3 µm (Model 225) of 0.5 µm (Model 4100). The results were compared to that of all chamber for the first day of exposure for males, and the air control chamber for all other days of particle size determination. The results indicated that an aerosol of EP was not present.

Chamber Temperature and Humidity

Chamber temperature and humidity were recorded twice each hour during each exposure from a modified Taylor hygrometer (Taylor Instruments, Sybron Corp., Arden, NC). The hygrometer was modified to provide sufficient ventilation for the wet bulb sock, by drawing air over the surface of the wet bulb at about 5 L/min with a vacuum source located outside the chamber. The effluent air was filtered through HEPA and charcoal filters.

MIRAN® IA Infrared Analyzer Operating Parameters and Calibration

The infrared analyzer operating parameters were as follows:

MIRAN® No.	2
Pathlength (m)	5.25
Wavelength (μm)	3.44
Slit (mm)	1
Response Time (sec)	1
Range (Absorption)	1
Gain	x1
Cell Temperature (K)	298
Cell Pressure (atm)	0.833
Cell Volume (L)	5.64

These parameters were selected by comparing the EP infrared spectra to that of EP-free air.

The infrared analyzer was calibrated for EP quantitation by making serial injections (Hamilton microliter syringe) into a closed-loop cell with a measured volume of EP. Each serial injection concentration was determined from the following formula:

$$C = \frac{(\rho)(V_1)(R)(T)(1000)}{(MW)(P)(V_2)}$$

where:
- C = concentration (ppm)
- ρ = EP density (0.913 g/mL)
- V_1 = serial injection volume (μL)
- R = gas constant (0.08205 atm·L/mole·K)
- T = MIRAN® cell temperature (298 K)
- 1000 = Conversion from μL to mL
- MW = EP molecular weight (104.15 g/mole)
- P = MIRAN® cell pressure (0.833 atm)
- V_2 = MIRAN® cell volume (5.64 L)

Three sets of serial injections were made to produce a mean calibration curve of EP concentration versus infrared analyzer output voltage. The calibration data were stored in an AATS computer file. Voltage data were converted to concentration by analog to digital conversion, and linear interpolation between the calibration data points immediately on each side of the sampled data, as described previously under the section "Vapor Analysis".

An infrared analyzer calibration check was performed just prior to exposure by injecting a measured amount of EP into the MIRAN® closed calibration loop. The infrared analyzer output voltage was converted to EP concentration and compared to the calculated expected concentration. The mean and standard deviation of the variation of 76 daily calibrations was 0.5%±2.7%.

Chamber Vapor Distribution

A pre-study test was conducted in each inhalation chamber to determine positional variations in chamber vapor concentration. Air from the breathing zones of cage positions 13, 18, 23, and 28 was sampled as described under "Vapor Analysis". A fixed reference position (between cages 25 and 26) was sampled alternately to each cage position for comparison. All samples were analyzed by infrared spectroscopy. The mean concentration and relative standard deviation of samples collected from the 4 cage positions were 114 ppm ± 1%, 209 ppm ± 1%, and 402 ppm ± 2% for the 100, 200, and 400 PPM dose groups, respectively. The mean concentration and relative standard deviation of the samples collected from the fixed reference position were 114 ppm ± 4%, 212 ppm ± 2%, and 403 ppm ± 2% for the 100, 200, and 400 PPM dose groups, respectively. The results indicate that positional effects were minimal and the fixed reference position was chosen for determining chamber vapor concentration during the study.

Animal Rotation

The animal cage assignments were sequentially advanced daily postexposure within each chamber to minimize potential positional effects.

DIAGRAM OF ETHYLENE GLYCOL MONOPROPYL ETHER GENERATING SYSTEM

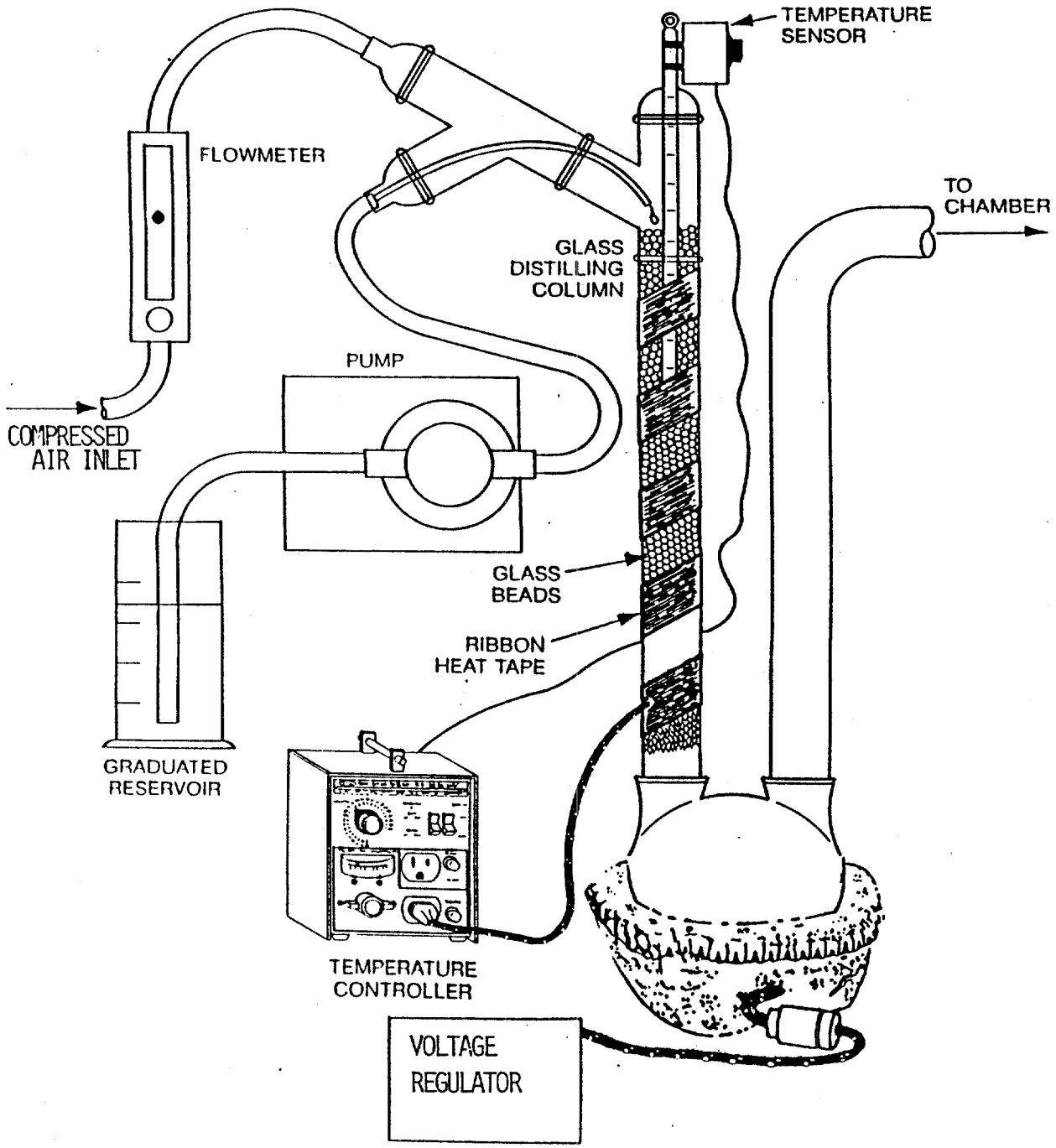

AUTOMATED MULTIPOSITIONAL ENVIRONMENTAL SAMPLING AND ANALYSIS SYSTEM

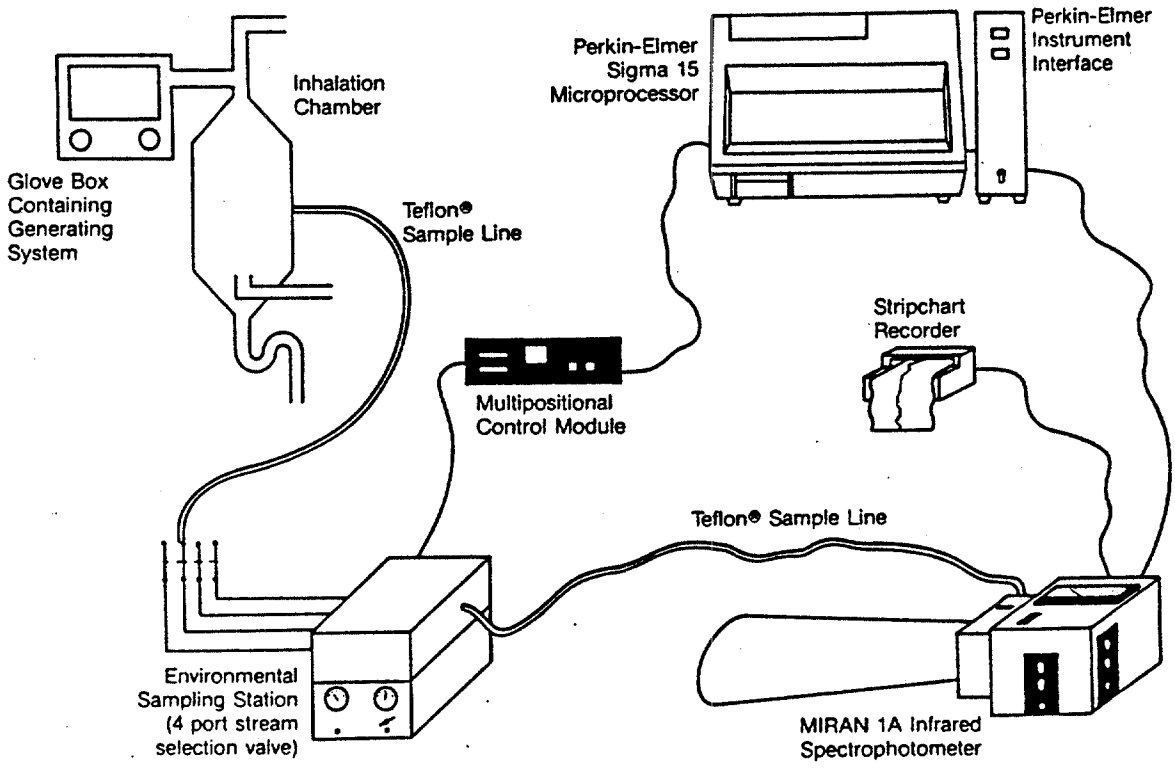

TOXICOLOGICAL SCIENCES LABORATORY
INHALATION TOXICOLOGY
CHAMBER DISTRIBUTION

STUDY NO: 880017I1
880017I2
ACCESSION NO: 907124

DATE: 4-APR-88

CHAMBER: C-08 DELTA P: 0.06" H_2O STATIC: -0.5" H_2O
EXPOSURE GROUP: 100 PPM

CAGE NO.	CONCENTRATION (PPM)	
	SAMPLE	REFERENCE
13	115	113
18	116	113
23	118	115
28	107	114
MEAN	114	114
SD	5	1
CV (1)	4	1

CHAMBER: C-09 DELTA P: 0.01" H_2O STATIC: -0.5" H_2O
EXPOSURE GROUP: 200 PPM

CAGE NO.	CONCENTRATION (PPM)	
	SAMPLE	REFERENCE
13	210	208
18	214	208
23	210	208
28	214	211
MEAN	212	209
SD	2	2
CV (1)	1	1

CHAMBER: C-10 DELTA P: 0.03" H_2O STATIC: -0.5" H_2O
EXPOSURE GROUP: 400 PPM

CAGE NO.	CONCENTRATION (PPM)	
	SAMPLE	REFERENCE
13	397	401
18	412	405
23	402	402
28	399	400
MEAN	403	402
SD	7	2
CV (1)	2	1

(1) = COEFFICIENT OF VARIATION IN PERCENT.

EXPLODED VIEW OF
C-SERIES CHAMBER

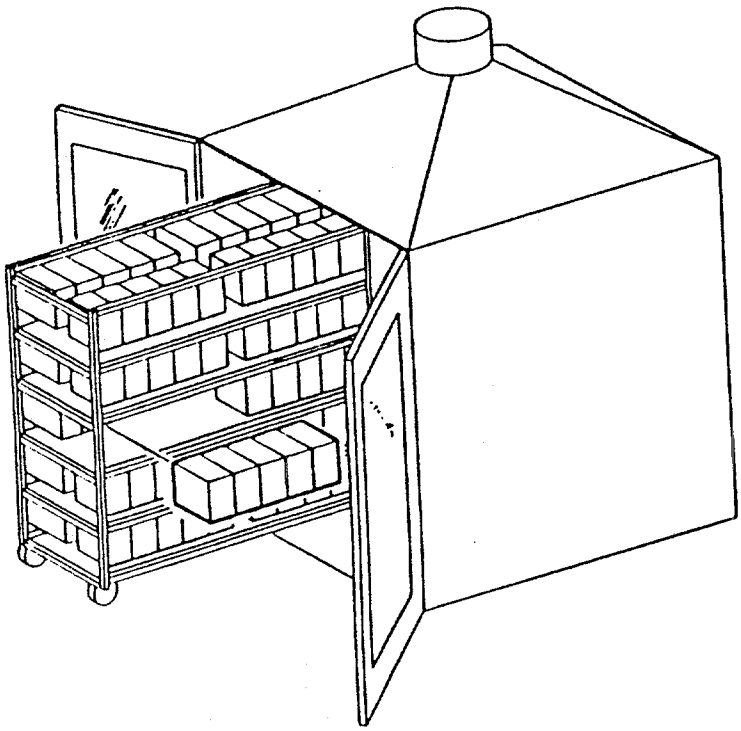

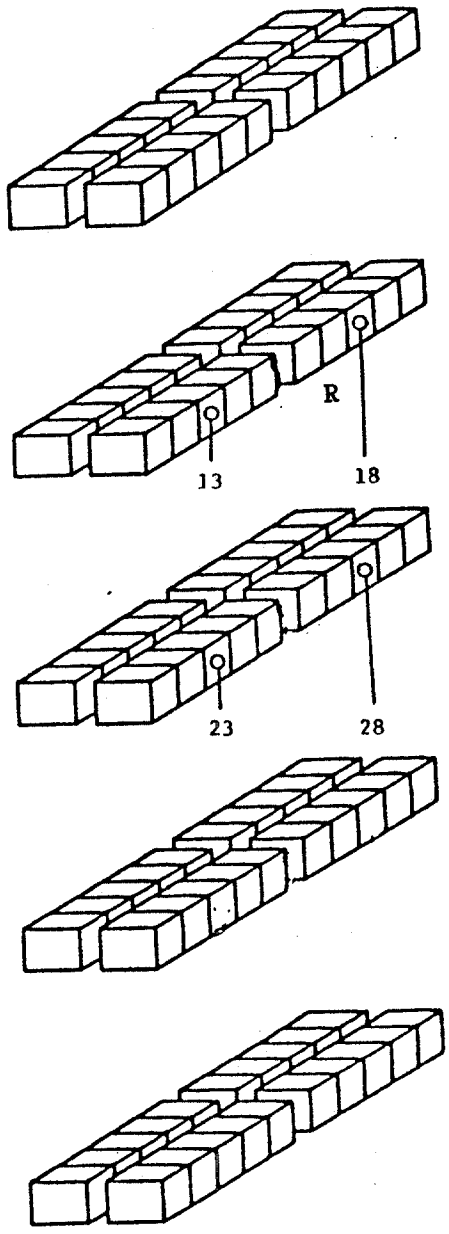

NOTE: "R" = FIXED REFERENCE POSITION (BETWEEN CAGES 25 AND 26).
Ø = CAGE POSITION/NUMBER.

GROUPED SUMMARY OF CLINICAL SIGNS

EXPERIMENT # 880017I1 EXPERIMENT START DATE: 18-APR-88 COMPOUND # 88-0017
SOFTWARE VERS # 3.0
ACCESSION NUMBER 907124

SEX - MALE OBSERVATION PERIOD - PRE DOSE

CLINICAL SIGN	NO. OF ANIMALS	MEAN ONSET DAY	ONSET S.D. #DAYS	ANIMALS AFFECTED
GROUP 1 - 0.000 PPM				
EAR TAG LOST	1	28.	0.	2
EAR TAG REPLACED	1	28.	0.	2
SKIN OF FOOT AND TOE				
ALOPECIA	1	11.	0.	9
SKIN OF ARM				
ALOPECIA	1	59.	0.	9
CAGE OBS.				
CAGESIDE OBSERVATION, NORMAL	10	1.	0.	1- 10
CAGE OBS. -URINE				
DISCOLORATION,RED	1	57.	0.	2
GROUP 2 - 100.000 PPM				
CAGE OBS.				
CAGESIDE OBSERVATION, NORMAL	10	1.	0.	11- 20
GROUP 3 - 200.000 PPM				
BODY AS A WHOLE, NOS				
EXCESSIVE WEIGHT LOSS	1	0.	0.	25
EAR TAG LOST	1	98.	0.	28
EAR TAG REPLACED	1	98.	0.	28
SKIN OF FOOT AND TOE				
ALOPECIA	1	49.	0.	28
CAGE OBS. -URINE				
DISCOLORATION,RED	3	29.	28.	22, 25, 27
CAGE OBS.				
CAGESIDE OBSERVATION, NORMAL	10	1.	0.	21- 30

KEY: *-INDICATES ANIMALS SHOWING CLINICAL EXAM NORMAL, MORIBUNDITY/MORTALITY CHECK NORMAL OR CAGESIDE OBSERVATION NORMAL

GROUPED SUMMARY OF CLINICAL SIGNS

EXPERIMENT # 88001711 EXPERIMENT START DATE: 18-APR-88 COMPOUND # 88-0017
SOFTWARE VERS # 3.0
ACCESSION NUMBER 907124

SEX - MALE OBSERVATION PERIOD - PRE DOSE

CLINICAL SIGN	NO. OF ANIMALS	MEAN ONSET DAY	ONSET S.D. #DAYS	ANIMALS AFFECTED
GROUP 4 - 400.000 PPM				
EAR TAG LOST	5	32.	18.	34, 36- 39
EAR TAG REPLACED	5	32.	18.	34, 36- 39
SKIN OF FOOT AND TOE				
ALOPECIA	2	32.	15.	32, 36
SKIN OF NECK				
ALOPECIA	1	35.	0.	32
SKIN OF SHOULDER				
ALOPECIA	3	44.	12.	32, 34, 37
CAGE OBS. -URINE				
DISCOLORATION,RED	10	1.	0.	31- 40
CAGE OBS.				
CAGESIDE OBSERVATION, NORMAL	10	2.	0.	31- 40

KEY: *-INDICATES ANIMALS SHOWING ONLY CLINICAL EXAM NORMAL, MORIBUNDITY/MORTALITY CHECK NORMAL OR CAGESIDE OBSERVATION NORMAL

GROUPED SUMMARY OF CLINICAL SIGNS

EXPERIMENT # 88001711 EXPERIMENT START DATE: 18-APR-88 COMPOUND # 88-0017
SOFTWARE VERS # 3.0
ACCESSION NUMBER 907124

SEX - MALE OBSERVATION PERIOD - DURING DOSE

CLINICAL SIGN	NO. OF ANIMALS	MEAN ONSET DAY	ONSET S.D. #DAYS	ANIMALS AFFECTED
GROUP 1 - 0.000 PPM				
CHAMB. OBS.				
CHAMBER OBSERVATION, NORMAL	10	0.	0.	1- 10
GROUP 2 - 100.000 PPM				
CHAMB. OBS.				
CHAMBER OBSERVATION, NORMAL	10	0.	0.	11- 20
GROUP 3 - 200.000 PPM				
CHAMB. OBS.				
CHAMBER OBSERVATION, NORMAL	10	0.	0.	21- 30
GROUP 4 - 400.000 PPM				
CHAMB. OBS.				
CHAMBER OBSERVATION, NORMAL	10	0.	0.	31- 40

KEY: *-INDICATES ANIMALS SHOWING ONLY CLINICAL EXAM NORMAL, MORIBUNDITY/MORTALITY CHECK NORMAL OR CAGESIDE OBSERVATION NORMAL

GROUPED SUMMARY OF CLINICAL SIGNS

EXPERIMENT # 880017I1 EXPERIMENT START DATE: 18-APR-88 COMPOUND # 88-0017
SOFTWARE VERS # 3.0
ACCESSION NUMBER 907124

SEX - MALE OBSERVATION PERIOD - POST DOSE

CLINICAL SIGN	NO. OF ANIMALS	MEAN ONSET DAY	ONSET S.D. #DAYS	ANIMALS AFFECTED
GROUP 1 - 0.000 PPM				
* NORMAL	9			1- 8, 10
SKIN OF FOOT AND TOE				
ALOPECIA	1	11.	0.	9
SKIN OF ARM				
ALOPECIA	1	58.	0.	9
GROUP 2 - 100.000 PPM				
* NORMAL	10			11- 20
GROUP 3 - 200.000 PPM				
* NORMAL	5			23- 24, 26- 27, 30
HAIR OF FACE				
DISCOLORATION,RED	4	48.	17.	21- 22, 25, 29
SKIN OF FOOT AND TOE				
ALOPECIA	1	46.	0.	28
GROUP 4 - 400.000 PPM				
* NORMAL	3			31, 33, 35
MOUTH				
SIALORRHEA	2	28.	20.	32, 39
SKIN OF FOOT AND TOE				
ALOPECIA	2	32.	15.	32, 36
NOSE				
PORPHYRIN NASAL DISCHARGE	3	40.	14.	34, 37, 40
HAIR OF FACE				
DISCOLORATION,RED	2	51.	31.	34, 38
SKIN OF NECK				
ALOPECIA	1	35.	0.	32
SKIN OF SHOULDER				
ALOPECIA	3	43.	12.	32, 34, 37
LEFT EYE				
PORPHYRIN TEARS	1	42.	0.	39

KEY: *-INDICATES ANIMALS SHOWING ONLY CLINICAL EXAM NORMAL, MORIBUNDITY/MORTALITY CHECK NORMAL OR CAGESIDE OBSERVATION NORMAL

GROUPED SUMMARY OF CLINICAL SIGNS

EXPERIMENT # 880017I1 EXPERIMENT START DATE: 18-APR-88 COMPOUND # 88-0017
SOFTWARE VERS # 3.0
ACCESSION NUMBER 907124

SEX - MALE OBSERVATION PERIOD - A.M.

CLINICAL SIGN	NO. OF ANIMALS	MEAN ONSET DAY	ONSET S.D. #DAYS	ANIMALS AFFECTED
GROUP 1 - 0.000 PPM				
INDUCED DEATH, SODIUM PENTOBARBITAL	5	100.	1.	4, 6, 8- 10
SKIN OF FOOT AND TOE				
ALOPECIA	1	32.	0.	9
SKIN OF ARM				
ALOPECIA	1	60.	0.	9
CAGE OBS.				
CAGESIDE OBSERVATION, NORMAL	7	99.	1.	1- 6, 8
CHAMB. OBS.				
CAGESIDE OBSERVATION, NORMAL	2	101.	0.	7, 10
GROUP 2 - 100.000 PPM				
INDUCED DEATH, SODIUM PENTOBARBITAL	7	100.	1.	12, 14- 17, 19- 20
CAGE OBS.				
CAGESIDE OBSERVATION, NORMAL	6	99.	1.	11, 13- 14, 16, 18- 19
CHAMB. OBS.				
CAGESIDE OBSERVATION, NORMAL	4	101.	0.	12, 15, 17, 20
GROUP 3 - 200.000 PPM				
INDUCED DEATH, SODIUM PENTOBARBITAL	5	100.	1.	22, 24- 26, 28
SKIN OF FOOT AND TOE				
ALOPECIA	1	60.	0.	28
CAGE OBS. -URINE				
DISCOLORATION,RED	1	99.	0.	22
CAGE OBS.				
CAGESIDE OBSERVATION, NORMAL	4	100.	0.	21, 25, 29- 30
CHAMB. OBS.				
CAGESIDE OBSERVATION, NORMAL	4	101.	0.	23- 24, 26- 27

KEY: *-INDICATES ANIMALS SHOWING CLINICAL EXAM NORMAL, MORIBUNDITY/MORTALITY CHECK NORMAL OR CAGESIDE OBSERVATION NORMAL

GROUPED SUMMARY OF CLINICAL SIGNS

EXPERIMENT # 88001711 EXPERIMENT START DATE: 18-APR-88 COMPOUND # 88-0017
SOFTWARE VERS # 3.0
ACCESSION NUMBER 907124

SEX - MALE OBSERVATION PERIOD - A.M.

CLINICAL SIGN	NO. OF ANIMALS	MEAN ONSET DAY	ONSET S.D. #DAYS	ANIMALS AFFECTED
GROUP 4 - 400.000 PPM				
EAR TAG LOST	2	18.	20.	32, 40
EAR TAG REPLACED	2	18.	20.	32, 40
INDUCED DEATH, SODIUM PENTOBARBITAL	5	100.	1.	33- 34, 36- 38
SKIN OF FOOT AND TOE				
ALOPECIA	2	46.	20.	32, 36
SKIN OF SHOULDER				
ALOPECIA	2	60.	0.	32, 37
CAGE OBS. -URINE				
DISCOLORATION,RED	1	99.	0.	32
CAGE OBS.				
CAGESIDE OBSERVATION, NORMAL	4	100.	0.	33, 37- 38, 40
CHAMB. OBS.				
CAGESIDE OBSERVATION, NORMAL	4	101.	0.	31, 34- 35, 39

KEY: *-INDICATES ANIMALS SHOWING ONLY CLINICAL EXAM NORMAL, MORIBUNDITY/MORTALITY CHECK NORMAL OR CAGESIDE OBSERVATION NORMAL

GROUPED SUMMARY OF CLINICAL SIGNS

EXPERIMENT # 880017I1 EXPERIMENT START DATE: 18-APR-88 COMPOUND # 88-0017
SOFTWARE VERS # 3.0
ACCESSION NUMBER 907124

SEX - MALE OBSERVATION PERIOD - P.M.

CLINICAL SIGN	NO. OF ANIMALS	MEAN ONSET DAY	ONSET S.D. #DAYS	ANIMALS AFFECTED
GROUP 1 - 0.000 PPM				
* NORMAL	9			1- 8, 10
INDUCED DEATH, CARBON DIOXIDE	4	100.	1.	1- 3, 5
INDUCED DEATH, SODIUM PENTOBARBITAL	1	101.	0.	7
SKIN OF FOOT AND TOE				
ALOPECIA	1	10.	0.	9
SKIN OF ARM				
ALOPECIA	1	60.	0.	9
GROUP 2 - 100.000 PPM				
* NORMAL	10			11- 20
INDUCED DEATH, CARBON DIOXIDE	3	99.	1.	11, 13, 18
GROUP 3 - 200.000 PPM				
* NORMAL	9			21- 27, 29- 30
INDUCED DEATH, CARBON DIOXIDE	5	100.	1.	21, 23, 27, 29- 30
SKIN OF FOOT AND TOE				
ALOPECIA	1	60.	0.	28
GROUP 4 - 400.000 PPM				
* NORMAL	7			31, 33- 35, 38- 40
INDUCED DEATH, CARBON DIOXIDE	5	100.	1.	31- 32, 35, 39- 40
SKIN OF FOOT AND TOE				
ALOPECIA	2	46.	20.	32, 36
SKIN OF SHOULDER				
ALOPECIA	2	60.	0.	32, 37

KEY: *-INDICATES ANIMALS SHOWING ONLY CLINICAL EXAM NORMAL, MORIBUNDITY/MORTALITY CHECK NORMAL OR CAGESIDE OBSERVATION NORMAL

GROUPED SUMMARY OF CLINICAL SIGNS

EXPERIMENT # 880017I2 EXPERIMENT START DATE: 25-APR-88 COMPOUND # 88-0017
SOFTWARE VERS # 3.0
ACCESSION NUMBER 907124

SEX - FEMALE OBSERVATION PERIOD - PRE DOSE

CLINICAL SIGN	NO. OF ANIMALS	MEAN ONSET DAY	ONSET S.D. #DAYS	ANIMALS AFFECTED
GROUP 1 - 0.000 PPM				
EAR TAG LOST	2	56.	0.	45, 48
EAR TAG REPLACED	2	56.	0.	45, 48
SKIN OF FOOT AND TOE				
ALOPECIA	2	69.	2.	43- 44
SKIN OF ARM				
ALOPECIA	1	80.	0.	44
CAGE OBS.				
CAGESIDE OBSERVATION, NORMAL	10	1.	0.	41- 50
GROUP 2 - 100.000 PPM				
EAR TAG LOST	3	29.	24.	52, 54, 56
EAR TAG REPLACED	3	29.	24.	52, 54, 56
SKIN OF FOOT AND TOE				
ALOPECIA	3	34.	9.	51, 54- 55
SKIN OF ARM				
ALOPECIA	1	77.	0.	54
CAGE OBS.				
CAGESIDE OBSERVATION, NORMAL	10	1.	0.	51- 60
CAGE OBS. -URINE				
DISCOLORATION,RED	1	72.	0.	60
GROUP 3 - 200.000 PPM				
EAR TAG LOST	1	21.	0.	66
EAR TAG REPLACED	1	21.	0.	66
SKIN OF FOOT AND TOE				
ALOPECIA	2	30.	1.	61, 66
SKIN OF NECK				
WOUND	1	51.	0.	66
ALOPECIA	1	57.	0.	66
SKIN OF ARM				
ALOPECIA	1	79.	0.	66
CAGE OBS. -URINE				
DISCOLORATION,RED	7	17.	34.	62, 64- 69
CAGE OBS.				
CAGESIDE OBSERVATION, NORMAL	10	2.	1.	61- 70

KEY: *-INDICATES ANIMALS SHOWING CLINICAL EXAM NORMAL, MORIBUNDITY/MORTALITY CHECK NORMAL OR CAGESIDE OBSERVATION NORMAL

GROUPED SUMMARY OF CLINICAL SIGNS

EXPERIMENT # 88001712 EXPERIMENT START DATE: 25-APR-88 COMPOUND # 88-0017
SOFTWARE VERS # 3.0
ACCESSION NUMBER 907124

SEX - FEMALE OBSERVATION PERIOD - PRE DOSE

CLINICAL SIGN	NO. OF ANIMALS	MEAN ONSET DAY	ONSET S.D. #DAYS	ANIMALS AFFECTED
GROUP 4 - 400.000 PPM				
EAR TAG LOST	2	91.	0.	74, 80
EAR TAG REPLACED	2	91.	0.	74, 80
CAGE OBS. -URINE				
DISCOLORATION,RED	10	1.	0.	71- 80
CAGE OBS.				
CAGESIDE OBSERVATION, NORMAL	10	2.	0.	71- 80

KEY: *-INDICATES ANIMALS SHOWING ONLY CLINICAL EXAM NORMAL, MORIBUNDITY/MORTALITY CHECK NORMAL OR CAGESIDE OBSERVATION NORMAL

GROUPED SUMMARY OF CLINICAL SIGNS

EXPERIMENT # 88001712 EXPERIMENT START DATE: 25-APR-88 COMPOUND # 88-0017
SOFTWARE VERS # 3.0
ACCESSION NUMBER 907124

SEX - FEMALE OBSERVATION PERIOD - DURING DOSE

CLINICAL SIGN	NO. OF ANIMALS	MEAN ONSET DAY	ONSET S.D. #DAYS	ANIMALS AFFECTED
GROUP 1 - 0.000 PPM				
CHAMB. OBS.				
CHAMBER OBSERVATION, NORMAL	10	0.	0.	41- 50
GROUP 2 - 100.000 PPM				
CHAMB. OBS.				
CHAMBER OBSERVATION, NORMAL	10	0.	0.	51- 60
GROUP 3 - 200.000 PPM				
CHAMB. OBS.				
CHAMBER OBSERVATION, NORMAL	10	0.	0.	61- 70
GROUP 4 - 400.000 PPM				
CHAMB. OBS.				
CHAMBER OBSERVATION, NORMAL	10	0.	0.	71- 80

KEY: *-INDICATES ANIMALS SHOWING ONLY CLINICAL EXAM NORMAL, MORIBUNDITY/MORTALITY CHECK NORMAL OR CAGESIDE OBSERVATION NORMAL

GROUPED SUMMARY OF CLINICAL SIGNS

EXPERIMENT # 88001712 EXPERIMENT START DATE: 25-APR-88 COMPOUND # 88-0017
SOFTWARE VERS # 3.0
ACCESSION NUMBER 907124

SEX - FEMALE OBSERVATION PERIOD - POST DOSE

CLINICAL SIGN	NO. OF ANIMALS	MEAN ONSET DAY	ONSET S.D. #DAYS	ANIMALS AFFECTED
GROUP 1 - 0.000 PPM				
* NORMAL	7			41- 42, 46- 50
HAIR OF FACE				
DISCOLORATION,RED	1	57.	0.	45
SKIN OF FOOT AND TOE				
ALOPECIA	2	67.	1.	43- 44
SKIN OF ARM				
ALOPECIA	1	79.	0.	44
GROUP 2 - 100.000 PPM				
* NORMAL	1			52
HAIR OF FACE				
DISCOLORATION,RED	9	30.	16.	51, 53- 60
SKIN OF FOOT AND TOE				
ALOPECIA	3	33.	8.	51, 54- 55
SKIN OF ARM				
ALOPECIA	1	74.	0.	54
GROUP 3 - 200.000 PPM				
* NORMAL	1			65
HAIR OF FACE				
DISCOLORATION,RED	8	27.	20.	62- 64, 66- 70
SKIN OF FOOT AND TOE				
ALOPECIA	2	29.	1.	61, 66
SKIN OF NECK				
WOUND	1	50.	0.	66
ALOPECIA	2	61.	6.	61, 66
NOSE				
PORPHYRIN NASAL DISCHARGE	1	56.	0.	64
MOUTH				
SIALORRHEA	1	57.	0.	69
SKIN OF SHOULDER				
ALOPECIA	1	70.	0.	66
WOUND	1	70.	0.	66
SKIN OF ARM				
ALOPECIA	2	83.	7.	61, 66

KEY: *-INDICATES ANIMALS SHOWING CLINICAL EXAM NORMAL, MORIBUNDITY/MORTALITY CHECK NORMAL OR CAGESIDE OBSERVATION NORMAL

GROUPED SUMMARY OF CLINICAL SIGNS

EXPERIMENT # 88001712 EXPERIMENT START DATE: 25-APR-88 COMPOUND # 88-0017
SOFTWARE VERS # 3.0
ACCESSION NUMBER 907124

SEX - FEMALE OBSERVATION PERIOD - POST DOSE

CLINICAL SIGN	NO. OF ANIMALS	MEAN ONSET DAY	ONSET S.D. #DAYS	ANIMALS AFFECTED
GROUP 4 - 400.000 PPM				
* NORMAL	4			72- 73, 79- 80
URINE				
DISCOLORATION,RED	3	0.	0.	71, 75, 78
HAIR OF FACE				
DISCOLORATION,RED	4	29.	17.	74- 77
LEFT EYE				
EXCESSIVE TEARING	1	18.	0.	74
MOUTH				
SIALORRHEA	1	35.	0.	76
NOSE				
PORPHYRIN NASAL DISCHARGE	1	45.	0.	74
HAIR OF ABDOMEN				
DISCOLORATION,ORANGE	1	99.	0.	76

KEY: *-INDICATES ANIMALS SHOWING ONLY CLINICAL EXAM NORMAL, MORIBUNDITY/MORTALITY CHECK NORMAL OR CAGESIDE OBSERVATION NORMAL

GROUPED SUMMARY OF CLINICAL SIGNS

EXPERIMENT # 88001712 EXPERIMENT START DATE: 25-APR-88 COMPOUND # 88-0017
SOFTWARE VERS # 3.0
ACCESSION NUMBER 907124

SEX - FEMALE OBSERVATION PERIOD - A.M.

CLINICAL SIGN	NO. OF ANIMALS	MEAN ONSET DAY	ONSET S.D. #DAYS	ANIMALS AFFECTED
GROUP 1 - 0.000 PPM				
EAR TAG LOST	1	10.	0.	46
EAR TAG REPLACED	1	10.	0.	46
INDUCED DEATH, SODIUM PENTOBARBITAL	3	100.	1.	42, 45, 50
INDUCED DEATH, CARBON DIOXIDE	4	100.	1.	41, 43, 46, 48
SKIN OF ARM				
ALOPECIA	1	95.	0.	44
CAGE OBS.				
CAGESIDE OBSERVATION, NORMAL	9	100.	1.	41- 43, 45- 50
GROUP 2 - 100.000 PPM				
EAR TAG LOST	2	21.	16.	58, 60
EAR TAG REPLACED	2	21.	16.	58, 60
INDUCED DEATH, SODIUM PENTOBARBITAL	4	100.	1.	52, 56- 57, 60
INDUCED DEATH, CARBON DIOXIDE	2	100.	1.	51, 54
SKIN OF FOOT AND TOE				
ALOPECIA	3	41.	16.	51, 54- 55
SKIN OF ARM				
ALOPECIA	1	95.	0.	54
CAGE OBS.				
CAGESIDE OBSERVATION, NORMAL	7	100.	1.	52- 53, 56- 60
GROUP 3 - 200.000 PPM				
INDUCED DEATH, SODIUM PENTOBARBITAL	3	100.	1.	62, 65, 70
INDUCED DEATH, CARBON DIOXIDE	3	100.	1.	61, 66, 68
SKIN OF FOOT AND TOE				
ALOPECIA	2	32.	0.	61, 66
SKIN OF NECK				
ALOPECIA	1	60.	0.	66
SKIN OF ARM				
ALOPECIA	1	95.	0.	66
CAGE OBS.				
CAGESIDE OBSERVATION, NORMAL	8	100.	1.	62- 65, 67- 70

KEY: *-INDICATES ANIMALS SHOWING CLINICAL EXAM NORMAL, MORIBUNDITY/MORTALITY CHECK NORMAL OR CAGESIDE OBSERVATION NORMAL

GROUPED SUMMARY OF CLINICAL SIGNS

EXPERIMENT # 88001712 EXPERIMENT START DATE: 25-APR-88 COMPOUND # 88-0017
SOFTWARE VERS # 3.0
ACCESSION NUMBER 907124

SEX - FEMALE OBSERVATION PERIOD - A.M.

CLINICAL SIGN	NO. OF ANIMALS	MEAN ONSET DAY	ONSET S.D. #DAYS	ANIMALS AFFECTED
GROUP 4 - 400.000 PPM				
EAR TAG LOST	1	32.	0.	80
EAR TAG REPLACED	1	32.	0.	80
INDUCED DEATH, SODIUM PENTOBARBITAL	3	100.	1.	77- 78, 80
INDUCED DEATH, CARBON DIOXIDE	2	100.	1.	75, 79
CAGE OBS.				
CAGESIDE OBSERVATION, NORMAL	9	100.	1.	71- 78, 80
CAGE OBS. -URINE				
DISCOLORATION,RED	1	99.	0.	79

KEY: *-INDICATES ANIMALS SHOWING ONLY CLINICAL EXAM NORMAL, MORIBUNDITY/MORTALITY CHECK NORMAL OR CAGESIDE OBSERVATION NORMAL

GROUPED SUMMARY OF CLINICAL SIGNS

EXPERIMENT # 88001712 EXPERIMENT START DATE: 25-APR-88 COMPOUND # 88-0017
SOFTWARE VERS # 3.0
ACCESSION NUMBER 907124

SEX - FEMALE OBSERVATION PERIOD - P.M.

CLINICAL SIGN	NO. OF ANIMALS	MEAN ONSET DAY	ONSET S.D. #DAYS	ANIMALS AFFECTED
GROUP 1 - 0.000 PPM				
* NORMAL	9			41- 43, 45- 50
SKIN OF ARM				
ALOPECIA	1	95.	0.	44
GROUP 2 - 100.000 PPM				
* NORMAL	7			52- 53, 56- 60
INDUCED DEATH, CARBON DIOXIDE	1	101.	0.	53
SKIN OF FOOT AND TOE				
ALOPECIA	3	41.	16.	51, 54- 55
SKIN OF ARM				
ALOPECIA	1	95.	0.	54
GROUP 3 - 200.000 PPM				
* NORMAL	8			62- 65, 67- 70
EAR TAG LOST	1	95.	0.	67
EAR TAG REPLACED	1	95.	0.	67
SKIN OF FOOT AND TOE				
ALOPECIA	2	32.	0.	61, 66
SKIN OF NECK				
ALOPECIA	1	60.	0.	66
SKIN OF ARM				
ALOPECIA	1	95.	0.	66
GROUP 4 - 400.000 PPM				
* NORMAL	10			71- 80
INDUCED DEATH, CARBON DIOXIDE	2	101.	0.	73, 76

KEY: *-INDICATES ANIMALS SHOWING ONLY CLINICAL EXAM NORMAL, MORIBUNDITY/MORTALITY CHECK NORMAL OR CAGESIDE OBSERVATION NORMAL

INCIDENCE OF RED DISCOLORED URINE

EXPERIMENT START DATE: 18-APR-88

COMPOUND # 88-0017
ACCESSION NUMBER 907124

EXPERIMENT # 880017I1		0.000 PPM M	100.000 PPM M	200.000 PPM M	400.000 PPM M
STUDY DAY	DAY OF THE WEEK				
1	TUESDAY			1	10
29	TUESDAY			1	1
36	TUESDAY				1
50	TUESDAY				1
57	TUESDAY	1		1	1
71	TUESDAY				1
85	TUESDAY				1
92	TUESDAY				2
99	TUESDAY			1	2

EXPERIMENT # 880017I2		0.000 PPM F	100.000 PPM F	200.000 PPM F	400.000 PPM F
STUDY DAY	DAY OF THE WEEK				
0	MONDAY				3
1	TUESDAY			5	10
2	WEDNESDAY				1
22	TUESDAY			1	
29	TUESDAY				1
36	TUESDAY				3
50	TUESDAY				1
57	TUESDAY				1
64	TUESDAY				3
71	TUESDAY				1
72	WEDNESDAY		1	1	
78	TUESDAY				1
80	THURSDAY				1
85	TUESDAY				2
88	FRIDAY			1	
92	TUESDAY			2	3
99	TUESDAY				3

NUMBERS REPRESENT NUMBER OF ANIMALS EXHIBITING RED DISCOLORED URINE.

EXPERIMENT # 880017I1 EXPERIMENT START DATE: 18-APR-88

COMPOUND # 88-0017
VERSION # 3.
ACCESSION # 907124

0.000	PPM	M
100.000	PPM	M
200.000	PPM	M
400.000	PPM	M

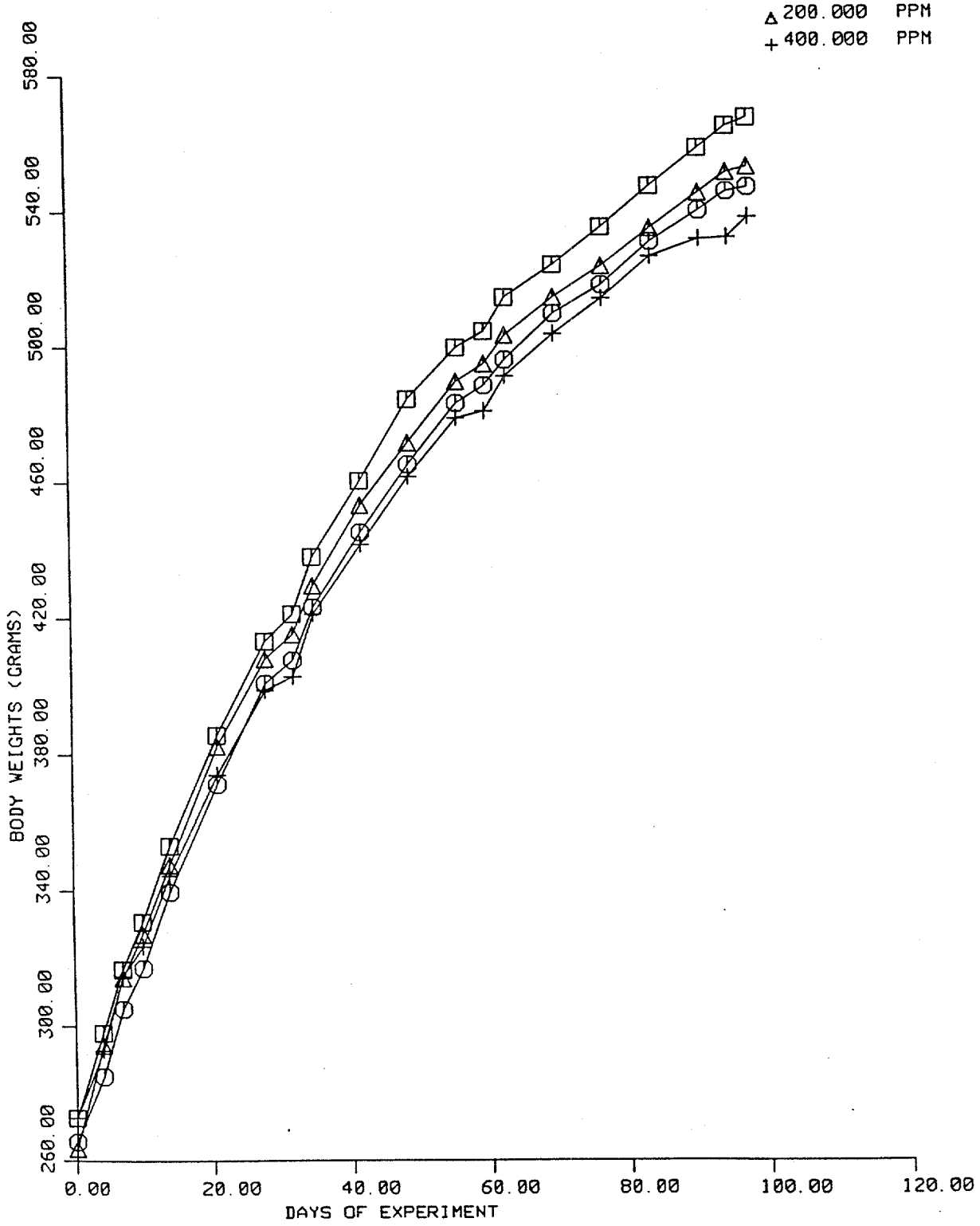

MEAN FOR BODY WEIGHT (GRAMS)

EXPERIMENT # 88001711 EXPERIMENT START DATE: 18-APR-88

COMPOUND # 88-0017
SOFTWARE VERS # 3.0
ACCESSION NUMBER 907124

		0.000 PPM GROUP-M	100.000 PPM GROUP-M	200.000 PPM GROUP-M	400.000 PPM GROUP-M
WEEK #	1				
DAY	0	272.6 A	265.5	263.3	272.6
		9.1 B	7.1	27.9	6.3
		10 C	10	10	10
DAY	4	297.7	284.9	294.1	292.5
		11.2	10.8	13.6	5.6
		10	10	10	10
DAY	7	316.5	305.0	314.4	314.8
		11.5	8.4	12.4	6.1
		10	10	10	10
WEEK #	2				
DAY	10	330.7	317.2	327.0	323.5
		13.7	7.0	14.0	6.5
		10	10	10	10
DAY	14	353.0	339.4	347.5	344.2
		17.7	8.2	15.0	7.6
		10	10	10	10
WEEK #	3				
DAY	21	385.4	370.8	382.1	373.9
		23.1	10.6	18.6	12.2
		10	10	10	10
WEEK #	4				
DAY	28	412.9	400.7	407.7	398.8
		30.7	13.6	19.3	14.9
		10	10	10	10
WEEK #	5				
DAY	32	420.8	407.4	415.0	402.8
		32.8	13.2	22.0	15.2
		10	10	10	10
DAY	35	437.9	422.9	429.3	420.8
		34.6	10.9	20.2	16.4
		10	10	10	10
WEEK #	6				
DAY	42	460.3	445.0	453.1	441.5
		35.8	14.3	22.1	19.6
		10	10	10	10
WEEK #	7				
DAY	49	484.4	465.1	471.5	461.5
		42.6	16.1	26.7	20.9
		10	10	10	10
WEEK #	8				
DAY	56	499.4	482.8	489.3	478.6
		43.9	15.5	28.1	22.1
		10	10	10	10
WEEK #	9				
DAY	60	504.3	488.2	494.7	480.6
		46.3	15.6	27.5	22.6
		10	10	10	10
DAY	63	514.0	495.6	502.9	490.8
		44.0	14.6	25.2	22.1
		10	10	10	10

KEY: A = MEAN VALUE
B = ± STANDARD DEVIATION
C = NUMBER OF VALUES PER GROUP

MEAN FOR BODY WEIGHT (GRAMS)

EXPERIMENT # 880017I1 EXPERIMENT START DATE: 18-APR-88 COMPOUND # 88-0017
SOFTWARE VERS # 3.0
ACCESSION NUMBER 907124

		0.000 PPM GROUP-M		100.000 PPM GROUP-M	200.000 PPM GROUP-M	400.000 PPM GROUP-M
WEEK #	10					
DAY	70	524.0	A	509.3	514.1	503.4
		51.9	B	16.1	25.4	23.3
		10	C	10	10	10
WEEK #	11					
DAY	77	535.1		517.8	523.5	514.0
		53.2		16.7	27.4	25.2
		10		10	10	10
WEEK #	12					
DAY	84	547.1		530.6	534.6	526.2
		54.9		16.5	30.9	25.1
		10		10	10	10
WEEK #	13					
DAY	91	558.3		539.9	545.1	531.4
		59.6		18.1	32.1	26.3
		10		10	10	10
WEEK #	14					
DAY	95	564.5		545.5	551.0	531.7
		58.1		18.4	35.5	25.1
		10		10	10	10
DAY	98	566.8		546.4	552.6	537.8
		56.9		14.5	35.6	27.5
		10		10	10	10

KEY: A = MEAN VALUE
B = ± STANDARD DEVIATION
C = NUMBER OF VALUES PER GROUP

INDIVIDUAL ANIMAL BODY WEIGHTS (GRAMS)

EXPERIMENT # 880017I1 EXPERIMENT START DATE: 18-APR-88 COMPOUND # 88-0017
SOFTWARE VERS # 3.0
ACCESSION NUMBER 907124

0.000 PPM GROUP-M

ANIMAL #	1	2	3	4	5	6	7	8	9	10
DAY 0	271.0	278.4	268.4	282.9	288.6	276.5	265.2	260.8	273.1	261.4
DAY 4	300.3	304.9	298.9	314.1	314.1	297.2	290.8	286.5	290.1	280.3
DAY 7	317.0	319.7	323.4	332.9	333.1	317.6	313.0	305.0	305.0	298.8
DAY 10	329.4	332.6	336.9	355.1	349.0	328.0	328.1	321.7	313.6	312.6
DAY 14	353.5	359.4	366.1	378.8	372.1	356.0	351.4	339.3	326.4	327.1
DAY 21	388.0	389.4	409.3	402.6	415.1	389.4	388.6	377.4	345.5	348.5
DAY 28	414.9	420.4	441.9	436.0	453.3	423.6	415.8	393.4	352.3	377.7
DAY 32	418.6	426.0	452.5	448.4	463.2	436.9	417.9	404.4	355.5	384.7
DAY 35	439.5	443.8	474.3	467.7	478.5	456.6	434.3	412.3	371.3	400.4
DAY 42	459.1	467.3	497.8	498.3	497.1	472.1	459.2	441.6	386.4	423.6
DAY 49	486.9	490.1	525.6	539.0	524.1	499.5	480.6	457.3	399.9	440.6
DAY 56	500.3	500.9	535.2	562.3	541.5	515.2	492.9	475.0	410.3	460.9
DAY 60	499.8	511.6	534.9	577.5	547.1	521.5	494.0	480.6	412.4	463.2
DAY 63	514.1	525.1	544.6	575.4	555.1	534.2	508.4	485.4	424.4	473.8
DAY 70	528.0	530.6	561.7	596.3	569.9	546.4	524.0	493.2	418.3	471.1
DAY 77	539.1	541.9	578.4	605.9	575.2	563.0	540.4	505.0	427.2	475.2
DAY 84	547.8	558.2	594.7	624.5	584.4	576.7	541.9	511.3	434.3	497.4
DAY 91	559.5	572.2	611.6	645.6	598.2	592.1	547.3	515.6	446.2	494.5
DAY 95	562.9	579.9	605.9	655.4	604.6	595.4	556.2	525.2	452.0	507.1
DAY 98	570.6	582.2	605.5	648.1	610.8	603.0	558.0	522.7	455.0	512.3

100.000 PPM GROUP-M

ANIMAL #	11	12	13	14	15	16	17	18	19	20
DAY 0	253.5	264.9	262.9	262.2	266.9	265.0	271.9	264.5	281.1	262.5
DAY 4	277.1	281.1	288.7	291.8	287.7	289.5	300.2	290.7	282.1	260.2
DAY 7	296.5	302.1	304.6	310.3	311.1	307.6	319.7	308.7	299.5	290.0
DAY 10	309.8	317.2	316.9	319.6	320.9	322.9	329.2	319.3	310.9	305.3
DAY 14	332.8	333.2	339.4	344.6	339.7	346.2	357.3	337.4	334.1	329.5
DAY 21	366.4	360.6	373.8	378.1	373.5	385.3	387.0	368.0	357.4	358.0
DAY 28	409.3	388.2	401.8	410.6	404.3	421.9	411.6	392.8	376.9	389.6
DAY 32	408.9	401.6	413.6	413.2	403.9	435.6	415.1	397.0	388.4	396.7
DAY 35	428.3	418.6	424.1	429.9	419.2	445.5	427.3	417.0	405.1	413.9
DAY 42	450.0	435.8	442.3	454.8	444.8	475.8	453.7	433.2	428.8	430.7
DAY 49	467.9	464.0	462.0	476.6	458.4	499.9	474.2	457.8	444.3	446.3
DAY 56	486.8	485.1	485.0	488.6	475.2	518.1	485.3	476.9	465.9	461.2
DAY 60	496.0	487.8	490.3	496.3	474.0	522.3	493.9	478.7	470.3	472.3
DAY 63	512.7	484.8	488.3	503.8	489.4	526.0	499.4	485.7	486.3	480.1
DAY 70	524.7	501.1	504.3	515.5	501.6	543.9	513.7	502.8	499.6	485.9
DAY 77	534.7	508.5	506.6	527.2	504.4	551.1	524.5	517.0	509.3	495.0
DAY 84	549.1	522.3	520.1	536.5	523.5	564.0	521.8	535.2	528.0	505.8
DAY 91	553.0	533.8	530.8	547.5	527.0	580.4	534.2	546.1	531.9	514.0
DAY 95	548.1	535.5	540.5	556.2	539.5	589.4	537.9	552.5	533.7	521.4
DAY 98	556.1	535.8	541.4	549.0	535.0	578.5	544.1	557.6	537.6	529.3

INDIVIDUAL ANIMAL BODY WEIGHTS (GRAMS)

EXPERIMENT # 880017I1 EXPERIMENT START DATE: 18-APR-88 COMPOUND # 88-0017
SOFTWARE VERS # 3.0
ACCESSION NUMBER 907124

200.000 PPM GROUP-M

ANIMAL #		21	22	23	24	25	26	27	28	29	30
DAY	0	278.2	274.5	260.9	278.3	185.5	266.1	272.0	271.4	267.6	278.4
DAY	4	304.9	300.6	279.4	309.3	265.3	290.2	292.2	302.5	290.8	305.8
DAY	7	322.2	326.0	295.0	326.0	298.0	304.0	308.9	326.3	311.4	325.7
DAY	10	335.7	341.5	298.8	335.8	313.8	314.6	326.8	334.7	326.5	342.1
DAY	14	357.0	366.5	318.4	356.9	344.5	329.1	343.4	348.6	346.9	363.9
DAY	21	388.3	407.9	345.9	394.5	389.5	356.5	380.2	382.6	379.0	396.9
DAY	28	413.4	440.2	377.1	419.2	415.8	380.0	399.8	400.5	408.3	423.0
DAY	32	423.1	450.2	377.9	426.3	423.4	384.1	406.2	406.8	418.2	433.7
DAY	35	433.3	461.2	395.9	443.9	431.9	396.7	424.9	426.3	436.5	442.1
DAY	42	456.7	482.8	420.7	470.0	448.2	414.1	447.7	453.6	462.4	475.3
DAY	49	483.1	513.3	443.0	486.5	451.8	424.7	469.7	463.9	479.8	499.4
DAY	56	508.0	522.9	455.1	507.4	482.7	435.0	485.6	484.5	489.4	522.7
DAY	60	514.1	524.3	457.5	516.0	494.9	441.7	488.8	491.9	493.2	524.3
DAY	63	520.2	531.3	471.4	518.0	501.5	452.4	506.2	499.3	497.7	531.0
DAY	70	531.6	547.4	486.4	520.8	510.3	467.8	517.0	500.9	509.5	549.0
DAY	77	540.6	559.2	489.7	540.7	515.8	472.4	518.9	521.3	520.4	556.2
DAY	84	558.4	570.0	501.1	555.7	514.7	479.4	538.4	537.3	518.0	573.2
DAY	91	565.3	584.8	510.9	562.3	529.4	486.4	547.5	544.8	530.4	588.8
DAY	95	575.6	589.0	510.1	570.0	542.2	486.8	555.2	555.7	525.9	599.8
DAY	98	578.8	589.5	515.7	570.0	544.6	482.6	560.8	555.7	529.8	598.9

400.000 PPM GROUP-M

ANIMAL #		31	32	33	34	35	36	37	38	39	40
DAY	0	274.4	280.9	266.9	266.3	263.4	274.6	277.7	274.1	267.3	280.9
DAY	4	292.5	297.4	286.8	290.8	286.1	301.8	297.4	293.0	284.2	295.1
DAY	7	310.1	320.9	310.2	312.6	311.9	319.7	320.6	315.9	303.6	322.5
DAY	10	317.5	330.0	316.7	316.6	320.4	327.1	332.3	326.8	316.6	330.8
DAY	14	337.4	350.0	340.9	338.9	342.4	351.6	353.9	352.1	330.5	343.8
DAY	21	366.3	375.5	371.0	366.0	377.9	385.5	393.8	383.6	350.4	368.8
DAY	28	389.4	403.9	414.1	394.6	407.4	403.4	411.4	412.4	368.5	382.6
DAY	32	397.6	401.1	410.2	396.0	414.2	414.3	420.2	416.7	376.1	381.1
DAY	35	417.4	420.7	434.3	416.5	433.7	421.0	438.5	438.0	393.4	394.8
DAY	42	435.0	438.4	454.8	433.5	461.2	447.6	461.1	461.7	415.8	405.7
DAY	49	452.0	467.2	481.9	459.2	491.3	462.1	471.7	473.4	429.5	426.3
DAY	56	474.5	478.0	500.9	473.7	512.1	474.7	488.4	494.7	449.2	439.9
DAY	60	473.5	482.6	500.7	478.8	517.0	482.8	489.8	489.2	456.6	434.9
DAY	63	482.0	497.8	509.0	480.5	523.7	490.8	504.6	506.0	461.2	452.8
DAY	70	498.9	509.0	526.6	502.2	537.5	507.3	509.3	512.4	470.4	459.9
DAY	77	503.8	516.1	528.4	512.8	555.6	525.8	518.8	528.3	487.4	463.0
DAY	84	510.2	525.0	542.9	530.5	565.6	536.8	532.1	541.7	501.6	475.4
DAY	91	506.9	535.7	550.8	536.7	574.4	536.3	533.4	546.9	514.3	478.4
DAY	95	511.6	534.6	547.8	540.0	569.2	537.3	536.5	545.0	518.9	475.7
DAY	98	507.7	543.4	554.9	544.9	581.0	546.0	538.2	555.1	525.5	481.7

EXPERIMENT # 88001712 EXPERIMENT START DATE: 25-APR-88 COMPOUND # 88-0017
VERSION # 3.
ACCESSION # 907124

□	0.000	PPM	F
○	100.000	PPM	F
△	200.000	PPM	F
+	400.000	PPM	F

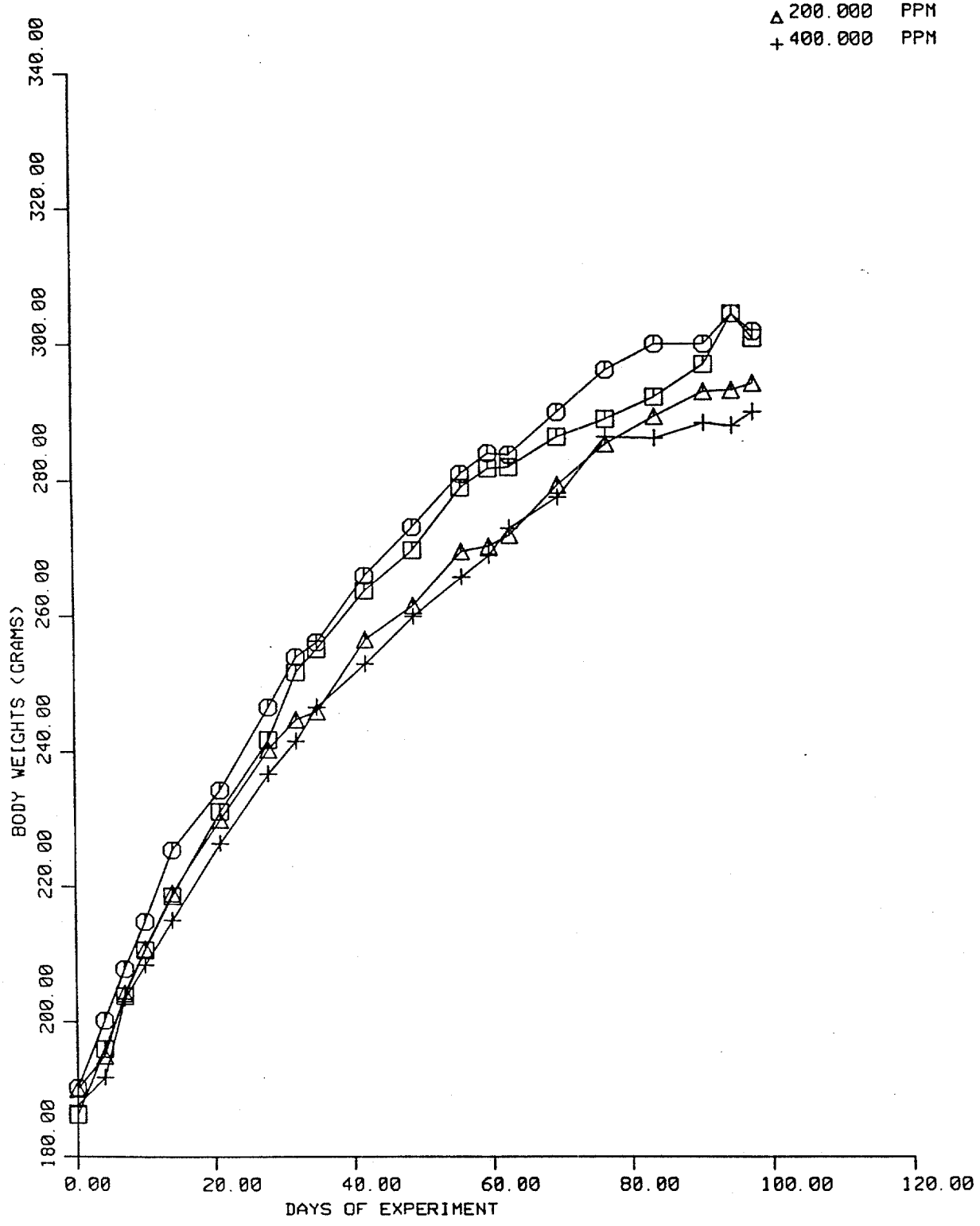

MEAN FOR BODY WEIGHT (GRAMS)

EXPERIMENT # 880017I2 EXPERIMENT START DATE: 25-APR-88 COMPOUND # 88-0017
SOFTWARE VERS # 3.0
ACCESSION NUMBER 907124

		0.000 PPM GROUP-F	100.000 PPM GROUP-F	200.000 PPM GROUP-F	400.000 PPM GROUP-F
WEEK #	1				
DAY	0	186.1 A	190.2	189.8	187.4
		9.5 B	10.7	9.4	10.6
		10 C	10	10	10
DAY	4	195.8	200.2	195.0	191.7
		9.1	11.9	8.5	9.4
		10	10	10	10
DAY	7	203.7	207.8	204.1	203.2
		10.0	13.4	10.9	11.9
		10	10	10	10
WEEK #	2				
DAY	10	210.6	214.7	210.7	208.3
		8.1	14.5	9.5	11.7
		10	10	10	10
DAY	14	218.5	225.2	218.8	214.9
		9.8	17.8	10.9	11.6
		10	10	10	10
WEEK #	3				
DAY	21	231.1	234.3	229.9	226.3
		12.1	15.1	13.9	15.0
		10	10	10	10
WEEK #	4				
DAY	28	241.7	246.4	240.3	236.7
		14.7	19.6	17.3	12.0
		10	10	10	10
WEEK #	5				
DAY	32	251.8	253.9	244.6	241.5
		16.7	20.9	19.0	11.6
		10	10	10	10
DAY	35	255.2	256.1	245.8	246.5
		14.3	22.1	18.9	13.0
		10	10	10	10
WEEK #	6				
DAY	42	263.7	265.9	256.6	252.8
		12.4	22.7	18.1	14.5
		10	10	10	10
WEEK #	7				
DAY	49	269.6	273.2	261.6	259.8
		17.5	24.3	19.5	16.0
		10	10	10	10
WEEK #	8				
DAY	56	279.0	280.8	269.6	265.6
		19.0	25.8	18.3	15.4
		10	10	10	10
WEEK #	9				
DAY	60	281.7	284.0	270.2	269.0
		19.3	23.8	18.6	15.7
		10	10	10	10
DAY	63	281.8	283.7	271.9	272.8
		18.1	27.7	19.8	17.7
		10	10	10	10

KEY: A = MEAN VALUE
B = ± STANDARD DEVIATION
C = NUMBER OF VALUES PER GROUP

MEAN FOR BODY WEIGHT (GRAMS)

EXPERIMENT # 88001712 EXPERIMENT START DATE: 25-APR-88

COMPOUND # 88-0017
SOFTWARE VERS # 3.0
ACCESSION NUMBER 907124

		0.000 PPM GROUP-F	100.000 PPM GROUP-F	200.000 PPM GROUP-F	400.000 PPM GROUP-F
WEEK #	10				
DAY	70	286.3 A	290.0	279.3	277.5
		15.2 B	25.5	20.9	17.0
		10 C	10	10	10
WEEK #	11				
DAY	77	288.8	296.2	285.3	286.2
		20.6	29.3	23.5	14.5
		10	10	10	10
WEEK #	12				
DAY	84	292.2	300.0	289.3	286.1
		19.8	28.8	22.2	13.3
		10	10	10	10
WEEK #	13				
DAY	91	296.9	300.0	292.9	288.4
		19.5	32.2	19.8	14.1
		10	10	10	10
WEEK #	14				
DAY	95	304.3	304.3	293.2	287.9
		20.8	31.5	20.2	16.1
		10	10	10	10
DAY	98	300.8	301.7	294.2	289.9
		18.9	29.7	21.9	12.5
		10	10	10	10

KEY: A = MEAN VALUE
B = ± STANDARD DEVIATION
C = NUMBER OF VALUES PER GROUP

INDIVIDUAL ANIMAL BODY WEIGHTS (GRAMS)

EXPERIMENT # 88001712 EXPERIMENT START DATE: 25-APR-88 COMPOUND # 88-0017
SOFTWARE VERS # 3.0
ACCESSION NUMBER 907124

0.000 PPM GROUP-F

ANIMAL #	41	42	43	44	45	46	47	48	49	50
DAY 0	177.5	193.7	172.6	194.2	185.6	190.0	171.0	187.6	190.2	199.0
DAY 4	186.5	202.1	189.5	205.1	195.5	193.7	179.3	195.4	202.2	208.8
DAY 7	196.0	206.3	190.2	217.9	199.9	204.3	190.1	203.3	212.9	216.5
DAY 10	206.5	214.8	203.7	219.6	206.1	209.2	195.6	211.1	222.3	216.7
DAY 14	209.8	232.4	212.6	224.8	211.2	218.4	202.2	218.3	231.7	223.4
DAY 21	224.0	244.5	215.1	232.9	229.7	231.6	213.3	227.0	248.5	244.5
DAY 28	227.6	261.8	219.8	248.2	244.9	237.1	224.3	241.2	250.1	262.3
DAY 32	237.8	270.0	226.9	260.3	258.7	245.2	230.2	249.3	263.9	275.6
DAY 35	245.1	269.5	239.2	262.0	255.0	252.9	232.9	248.2	275.4	271.8
DAY 42	258.6	275.4	249.4	268.1	265.6	261.8	243.7	255.1	282.6	276.3
DAY 49	260.2	289.7	251.4	267.2	278.1	264.1	245.5	255.3	289.6	294.9
DAY 56	264.4	304.4	260.1	285.7	293.8	271.7	249.3	267.9	289.2	303.3
DAY 60	272.1	311.2	261.9	286.1	297.3	270.7	251.3	269.6	298.8	297.9
DAY 63	260.6	298.8	266.8	291.5	296.3	278.1	253.5	271.8	294.2	306.6
DAY 70	268.9	299.6	273.2	292.1	293.7	285.4	261.6	279.2	306.3	302.8
DAY 77	262.6	315.7	274.3	286.3	303.2	285.2	262.2	276.3	303.9	318.4
DAY 84	278.4	314.7	274.8	303.9	313.2	278.0	261.9	277.6	306.7	312.5
DAY 91	279.5	318.5	283.9	304.6	312.0	284.1	268.0	281.4	319.2	318.1
DAY 95	284.5	330.3	292.9	312.6	318.2	290.3	273.8	288.2	333.3	318.8
DAY 98	277.5	311.3	290.2	307.0	310.7	290.6	277.2	287.2	328.3	327.6

100.000 PPM GROUP-F

ANIMAL #	51	52	53	54	55	56	57	58	59	60
DAY 0	187.6	196.4	191.1	192.5	171.8	192.9	186.5	211.4	177.8	193.7
DAY 4	201.4	205.8	203.2	199.0	183.0	207.1	196.0	222.9	181.4	201.8
DAY 7	214.5	215.3	199.5	210.3	187.1	214.2	209.6	232.6	188.9	205.5
DAY 10	215.8	225.3	218.9	218.4	193.4	222.7	214.1	236.1	187.1	214.9
DAY 14	226.1	232.3	223.1	240.0	205.0	231.3	226.8	254.2	189.2	224.3
DAY 21	244.8	244.1	238.1	239.0	214.9	236.4	231.2	257.8	205.1	231.8
DAY 28	263.4	259.5	259.1	239.3	218.2	243.6	252.7	276.2	215.4	237.0
DAY 32	267.9	268.1	272.4	249.4	223.9	252.2	262.1	279.3	214.9	249.3
DAY 35	269.4	270.6	265.8	254.8	230.0	255.1	268.2	290.2	214.8	242.0
DAY 42	273.2	273.5	285.2	262.9	245.2	272.9	269.4	300.2	216.5	260.0
DAY 49	278.9	285.9	294.8	266.2	251.4	276.2	279.4	312.5	223.9	262.7
DAY 56	288.3	296.2	307.7	264.0	253.7	282.0	295.4	318.3	234.3	268.1
DAY 60	285.8	299.7	307.3	274.0	263.8	288.2	292.0	318.8	234.5	275.5
DAY 63	290.8	294.6	304.2	277.1	258.5	284.4	289.8	337.3	234.6	266.1
DAY 70	296.4	308.2	321.8	284.0	264.1	292.9	287.2	323.9	239.6	281.7
DAY 77	294.2	316.1	325.7	282.9	257.2	292.9	316.3	343.2	252.8	280.4
DAY 84	308.8	315.6	328.4	275.8	276.6	298.3	324.7	340.9	248.9	282.0
DAY 91	306.0	316.1	331.2	284.3	261.0	299.2	317.1	355.8	250.3	278.9
DAY 95	308.2	323.1	336.7	289.6	271.0	302.1	313.4	361.0	254.7	283.4
DAY 98	309.1	314.0	333.0	293.7	276.1	297.7	299.7	358.5	252.6	282.7

INDIVIDUAL ANIMAL BODY WEIGHTS (GRAMS)

EXPERIMENT # 88001712 EXPERIMENT START DATE: 25-APR-88 COMPOUND # 88-0017
SOFTWARE VERS # 3.0
ACCESSION NUMBER 907124

200.000 PPM GROUP-F

ANIMAL #	61	62	63	64	65	66	67	68	69	70
DAY 0	204.4	196.8	186.2	182.7	196.0	175.8	185.5	179.5	200.0	191.4
DAY 4	207.3	201.7	192.6	189.3	200.9	181.6	191.2	185.5	204.5	195.0
DAY 7	218.6	216.1	205.4	191.5	209.5	195.1	195.7	188.5	215.9	204.6
DAY 10	227.5	222.5	210.4	201.2	215.8	202.7	205.3	198.9	215.5	206.9
DAY 14	241.9	229.2	218.9	210.6	223.9	207.9	215.2	205.0	220.5	215.1
DAY 21	263.1	240.7	235.9	221.8	227.1	219.8	226.9	216.8	219.2	227.7
DAY 28	282.4	250.5	238.8	227.9	248.2	223.8	232.9	225.1	234.7	238.4
DAY 32	290.5	258.7	245.8	229.9	251.0	229.1	234.1	228.1	238.2	240.6
DAY 35	284.3	260.7	251.9	227.9	260.1	231.4	235.6	222.3	236.2	248.0
DAY 42	300.4	269.1	241.5	247.1	265.5	250.3	249.5	238.4	251.9	252.0
DAY 49	307.2	274.3	240.6	242.6	272.2	253.2	260.5	251.7	261.3	252.3
DAY 56	308.3	287.1	258.6	254.0	284.2	249.6	262.7	257.2	270.5	263.4
DAY 60	306.0	290.0	255.8	254.9	288.6	249.5	263.1	257.6	271.8	264.7
DAY 63	304.6	298.1	260.6	249.4	293.6	261.0	265.6	249.8	268.5	267.4
DAY 70	324.3	301.4	255.3	264.4	288.3	263.4	278.5	270.0	281.7	266.0
DAY 77	336.7	308.9	267.8	263.0	291.4	262.1	282.4	273.2	294.5	272.7
DAY 84	337.8	305.6	273.2	268.3	302.0	263.7	288.2	282.6	296.8	274.9
DAY 91	339.1	306.6	277.9	271.9	296.5	278.2	287.5	286.3	303.6	281.3
DAY 95	334.6	312.2	272.9	269.4	303.2	279.9	288.5	285.9	303.8	281.1
DAY 98	339.6	307.7	277.3	267.9	300.0	271.7	294.1	293.8	311.2	278.4

400.000 PPM GROUP-F

ANIMAL #	71	72	73	74	75	76	77	78	79	80
DAY 0	189.9	200.3	203.0	184.3	176.9	179.2	181.4	201.8	176.8	180.5
DAY 4	190.9	198.8	204.3	189.2	185.2	181.4	182.0	209.4	187.2	188.4
DAY 7	203.1	212.6	219.8	202.8	199.2	188.0	197.7	221.0	185.5	202.4
DAY 10	213.1	214.8	222.6	210.7	203.9	187.0	197.7	226.1	200.8	206.4
DAY 14	216.5	224.7	232.6	218.3	212.9	191.6	207.9	224.1	205.0	215.9
DAY 21	230.5	235.0	250.2	229.1	223.5	212.9	214.2	246.3	203.3	217.5
DAY 28	228.3	236.5	251.3	236.7	236.8	228.4	232.2	261.4	219.2	236.4
DAY 32	234.6	245.4	255.9	242.1	237.6	231.7	235.7	265.4	226.9	239.5
DAY 35	243.2	254.4	263.3	247.6	246.6	231.6	236.4	267.4	226.4	248.4
DAY 42	251.2	264.5	273.1	256.7	250.0	234.0	241.2	269.8	230.1	257.8
DAY 49	260.4	270.2	281.2	252.4	254.0	250.3	251.0	284.0	230.4	264.2
DAY 56	261.9	271.4	273.9	259.3	282.5	261.3	251.2	289.5	236.0	269.2
DAY 60	271.6	273.8	274.9	261.1	287.5	260.4	251.5	294.4	242.5	272.1
DAY 63	266.4	276.8	282.6	270.0	301.4	262.5	260.7	296.3	240.7	270.6
DAY 70	267.7	280.4	288.8	259.0	302.1	261.5	268.2	305.8	261.3	279.9
DAY 77	279.6	288.2	294.3	271.9	313.6	274.2	272.2	306.9	279.3	281.8
DAY 84	274.8	290.3	300.5	275.1	290.2	283.1	266.6	309.8	276.9	294.1
DAY 91	283.2	292.3	302.2	276.6	294.0	285.2	270.5	310.3	267.9	301.3
DAY 95	288.8	290.9	302.9	276.5	291.3	278.6	275.8	315.6	259.0	299.5
DAY 98	282.6	297.1	307.3	276.5	289.5	287.5	284.3	304.5	268.9	301.2

MEAN TERMINAL ORGAN WEIGHTS AND BODY WEIGHTS

EXPERIMENT # 880017I1 EXPERIMENT START DATE: 18-APR-88 COMPOUND # 88-0017
SOFTWARE VERS # 3.0
ACCESSION NUMBER 907124

NECROPSY DAY - 99

GROUP		0.000 PPM M	100.000 PPM M	200.000 PPM M	400.000 PPM M
BODY WEIGHT, PERFUSED	(G)	515.2 A	524.9	521.4	511.1
		82.9 B	22.7	36.9	12.9
		5 C	5	5	5
BODY WEIGHT	(G)	539.5	500.9	510.4	501.4
		23.0	92.6	34.1	63.0
		5	5	5	5
LIVER, PERFUSED	(G)	16.5750	17.0814	16.1726	15.0964
		3.4942	3.7477	1.9259	1.3038
		5	5	5	5
	%	3.1975	3.2451	3.1096	2.9529
		0.1830	0.6259	0.3720	0.2287
		5	5	5	5
KIDNEYS, PERFUSED	(G)	4.3557	4.3419	4.6139	4.3801
		0.7133	0.7620	0.7290	0.2828
		5	5	5	5
	%	0.8524	0.8243	0.8847	0.8569
		0.1156	0.1156	0.1231	0.0494
		5	5	5	5
SPLEEN, PERFUSED	(G)	1.1024	1.1990	1.1722	1.3687
		0.2671	0.2310	0.3386	0.1632
		5	5	5	5
	%	0.2135	0.2280	0.2251	0.2678
		0.0317	0.0407	0.0634	0.0313
		5	5	5	5
BRAIN, PERFUSED	(G)	2.2057	2.1649	2.1851	2.0902
		0.1452	0.0804	0.0840	0.0717
		5	5	5	5
	%	0.4375	0.4128	0.4210	0.4090
		0.0777	0.0148	0.0361	0.0120
		5	5	5	5
LIVER	(G)	14.8369	14.0151	13.3117	13.6012
		0.9204	0.7590	0.9578	1.5130
		5	5	5	5
	%	2.7511	2.8006	2.6093	2.7260
		0.1447	0.1948	0.1214	0.2590
		5	5	5	5
KIDNEYS	(G)	3.6670	3.5059	3.6295	3.6998
		0.3972	0.2599	0.1370	0.3102
		5	5	5	5
	%	0.6789	0.7000	0.7126	0.7415
		0.0544	0.0509	0.0359	0.0438
		5	5	5	5
SPLEEN	(G)	0.8164	0.8051	0.8698	0.9640
		0.1228	0.0793	0.0740	0.1358
		5	5	5	5
	%	0.1520	0.1607	0.1703	0.1959
		0.0275	0.0154	0.0057	0.0444
		5	5	5	5
BRAIN	(G)	2.0909	2.1476	2.1376	2.1040
		0.0467	0.0494	0.0482	0.0547
		5	5	5	5
	%	0.3883	0.4289	0.4202	0.4252
		0.0226	0.0120	0.0284	0.0571
		5	5	5	5

KEY: A = MEAN VALUE
B = ± STANDARD DEVIATION
C = NUMBER OF VALUES PER GROUP

INDIVIDUAL ANIMAL ORGAN WEIGHTS AND TERMINAL BODY WEIGHT

EXPERIMENT # 880017I1 EXPERIMENT START DATE: 18-APR-88 COMPOUND # 88-0017
SOFTWARE VERS # 3.0
ACCESSION NUMBER 907124

0.000 PPM GROUP -- M

ANIMAL #		1	2	3	4	5	6	7	8	9	10
BODY WEIGHT	(G)	527.7	537.1	560.4	621.2	563.6	575.9	508.6	466.6	415.9	496.4
LIVER, PERF	(G)				21.0263		19.0965		13.7615	12.7489	16.2416
	%				3.3851		3.3161		2.9491	3.0652	3.2719
KIDNEYS, PE	(G)				5.5955		3.9812		3.7990	4.1857	4.2173
	%				0.9008		0.6913		0.8141	1.0063	0.8496
SPLEEN, PER	(G)				1.5203		0.9788		0.9301	0.8708	1.2121
	%				0.2448		0.1700		0.1993	0.2094	0.2442
BRAIN, PERF	(G)				2.3169		1.9746		2.3323	2.1672	2.2376
	%				0.3730		0.3429		0.4998	0.5210	0.4508
LIVER	(G)	14.5927	13.9905	16.4109		14.6909		14.4994			
	%	2.7653	2.6049	2.9282		2.6066		2.8507			
KIDNEYS	(G)	3.4056	3.2568	3.9391		4.2136		3.5201			
	%	0.6454	0.6064	0.7029		0.7476		0.6921			
SPLEEN	(G)	0.8471	0.7296	0.6595		0.8755		0.9705			
	%	0.1605	0.1358	0.1177		0.1553		0.1908			
BRAIN	(G)	2.1410	2.1081	2.0143		2.0922		2.0991			
	%	0.4057	0.3925	0.3594		0.3712		0.4127			

100.000 PPM GROUP -- M

ANIMAL #		11	12	13	14	15	16	17	18	19	20
BODY WEIGHT	(G)	509.0	500.6	498.5	547.7	516.2	550.2	505.3	505.8	509.6	485.8
LIVER, PERF	(G)		13.6772		23.3945	17.1436	15.1965			15.9951	
	%		2.7322		4.2715	3.3212	2.7621			3.1386	
KIDNEYS, PE	(G)		3.4381		5.5093	4.2660	4.4928			4.0034	
	%		0.6868		1.0059	0.8264	0.8166			0.7856	
SPLEEN, PER	(G)		0.8198		1.4125	1.2231	1.1879			1.3517	
	%		0.1638		0.2579	0.2369	0.2159			0.2652	
BRAIN, PERF	(G)		2.1505		2.1347	2.1541	2.3000			2.0851	
	%		0.4296		0.3898	0.4173	0.4181			0.4091	
LIVER	(G)	13.8128		14.4506				14.0915	12.8553		14.8651
	%	2.7136		2.8990				2.7887	2.5415		3.0600
KIDNEYS	(G)	3.2898		3.7675				3.8054	3.3875		3.2791
	%	0.6463		0.7558				0.7531	0.6697		0.6750
SPLEEN	(G)	0.7140		0.8680				0.8117	0.8954		0.7364
	%	0.1403		0.1741				0.1606	0.1770		0.1516
BRAIN	(G)	2.1000		2.2179				2.1743	2.1407		2.1053
	%	0.4126		0.4450				0.4303	0.4232		0.4334

200.000 PPM GROUP -- M

ANIMAL #		21	22	23	24	25	26	27	28	29	30
BODY WEIGHT	(G)	530.8	557.8	469.5	540.0	524.1	460.0	516.8	524.9	482.8	552.3
LIVER, PERF	(G)		18.2239		14.3392	18.2215	15.5390		14.5394		
	%		3.2674		2.6556	3.4770	3.3780		2.7700		
KIDNEYS, PE	(G)		4.5180		4.7539	5.7566	3.8120		4.2292		
	%		0.8100		0.8804	1.0985	0.8287		0.8057		
SPLEEN, PER	(G)		1.0035		1.3201	1.6949	0.9886		0.8538		
	%		0.1799		0.2445	0.3234	0.2149		0.1627		
BRAIN, PERF	(G)		2.0625		2.2191	2.2892	2.1538		2.2008		
	%		0.3698		0.4110	0.4368	0.4682		0.4193		
LIVER	(G)	13.7455		12.4426				14.4484		12.1904	13.7316
	%	2.5894		2.6499				2.7957		2.5252	2.4864
KIDNEYS	(G)	3.6127		3.4009				3.6853		3.6982	3.7506
	%	0.6806		0.7243				0.7131		0.7661	0.6791
SPLEEN	(G)	0.8940		0.8175				0.8906		0.7783	0.9688
	%	0.1684		0.1741				0.1723		0.1612	0.1754
BRAIN	(G)	2.1189		2.0750				2.1909		2.1817	2.1216
	%	0.3992		0.4419				0.4239		0.4519	0.3842

400.000 PPM GROUP -- M

ANIMAL #		31	32	33	34	35	36	37	38	39	40
BODY WEIGHT	(G)	470.2	594.1	519.4	514.0	533.1	517.5	488.4	516.3	477.0	432.6
LIVER, PERF	(G)			17.2964	14.8046		15.0985	14.2995	13.9832		
	%			3.3302	2.8803		2.9175	2.9281	2.7085		
KIDNEYS, PE	(G)			4.6090	3.9812		4.4426	4.2117	4.6561		
	%			0.8874	0.7746		0.8584	0.8624	0.9019		
SPLEEN, PER	(G)			1.2965	1.1608		1.5914	1.3390	1.4559		
	%			0.2496	0.2258		0.3075	0.2742	0.2820		
BRAIN, PERF	(G)			2.0308	2.0722		2.1669	2.0169	2.1640		
	%			0.3910	0.4032		0.4187	0.4130	0.4192		
LIVER	(G)	13.8173	13.7697			15.6949				13.2641	11.4602
	%	2.9386	2.3177			2.9441				2.7809	2.6489
KIDNEYS	(G)	3.4911	4.2218			3.6644				3.6808	3.4407
	%	0.7425	0.7106			0.6874				0.7717	0.7953
SPLEEN	(G)	0.9769	0.8357			1.0649				0.8182	1.1242
	%	0.2078	0.1407			0.1998				0.1715	0.2598
BRAIN	(G)	2.0663	2.1235			2.0332				2.1238	2.1731
	%	0.4395	0.3574			0.3814				0.4453	0.5023

MEAN TERMINAL ORGAN WEIGHTS AND BODY WEIGHTS

EXPERIMENT # 88001712 EXPERIMENT START DATE: 25-APR-88 COMPOUND # 88-0017
SOFTWARE VERS # 3.0
ACCESSION NUMBER 907124

NECROPSY DAY - 99

GROUP		0.000 PPM F	100.000 PPM F	200.000 PPM F	400.000 PPM F
BODY WEIGHT, PERFUSED	(G)	315.4 A	301.8	291.9	295.3
		77.1 B	35.7	29.6	33.5
		5 C	5	5	4
BODY WEIGHT	(G)	257.6	267.3	268.3	258.7
		33.9	25.7	25.6	18.3
		5	5	5	5
LIVER, PERFUSED	(G)	11.4389	10.4864	12.0854	12.6289
		0.7719	1.2376	2.6741	2.3789
		5	5	5	5
	%	3.6258	3.4790	4.1006	4.2868
		0.1955	0.1930	0.4953	0.5649
		5	5	5	5
KIDNEYS, PERFUSED	(G)	2.7906	2.6558	2.8613	2.9925
		0.3312	0.1381	0.5240	0.4821
		5	5	5	5
	%	0.8849	0.8898	0.9768	1.0462
		0.1033	0.1119	0.1096	0.1502
		5	5	5	5
SPLEEN, PERFUSED	(G)	0.8746	0.7519	0.8580	1.0083
		0.0729	0.0679	0.2169	0.1734
		5	5	5	5
	%	0.2776	0.2516	0.2920	0.3370
		0.0261	0.0358	0.0532	0.0654
		5	5	5	5
BRAIN, PERFUSED	(G)	2.0414	1.9714	1.9535	1.9647
		0.1197	0.0378	0.0643	0.0485
		5	5	5	5
	%	0.6478	0.6607	0.6755	0.6724
		0.0445	0.0802	0.0817	0.0930
		5	5	5	5
LIVER	(G)	7.3521	7.7512	8.1558	8.1931
		0.9191	0.4123	1.3200	0.7772
		5	5	5	5
	%	2.8511	2.9173	3.0488	3.1684
		0.3206	0.2811	0.4899	0.2190
		5	5	5	5
KIDNEYS	(G)	2.0452	1.9295	2.1242	2.1570
		0.1527	0.1688	0.1832	0.1332
		5	5	5	5
	%	0.7943	0.7257	0.7947	0.8381
		0.0612	0.0763	0.0710	0.0897
		5	5	5	5
SPLEEN	(G)	0.5098	0.5011	0.5424	0.7009 *
		0.0596	0.0378	0.0559	0.1389
		5	5	5	5
	%	0.1981	0.1878	0.2033	0.2720 *
		0.0244	0.0055	0.0261	0.0565
		5	5	5	5
BRAIN	(G)	1.9425	1.9157	1.9123	1.9458
		0.0918	0.0196	0.0753	0.0309
		5	5	5	5
	%	0.7544	0.7218	0.7197	0.7548
		0.0399	0.0680	0.0911	0.0476
		5	5	5	5

KEY: A = MEAN VALUE
B = ± STANDARD DEVIATION
C = NUMBER OF VALUES PER GROUP
* = STATISTICALLY DIFFERENT FROM CONTROLS ($p \leq 0.05$), ONE-WAY ANOVA

INDIVIDUAL ANIMAL ORGAN WEIGHTS AND TERMINAL BODY WEIGHT

EXPERIMENT # 88001712 EXPERIMENT START DATE: 25-APR-88 COMPOUND # 88-0017
SOFTWARE VERS # 3.0
ACCESSION NUMBER 907124

0.000 PPM GROUP - F

ANIMAL #		41	42	43	44	45	46	47	48	49	50
BODY WEIGHT	(G)	253.3	318.0	260.0	311.4	306.6	254.7	261.0	258.9	327.0	313.7
LIVER, PERF	(G)		10.7038		11.5941	10.6462				12.4777	11.7729
	%		3.3658		3.7232	3.4719				3.8156	3.7524
KIDNEYS, PE	(G)		2.8854		2.3622	2.6586				2.7780	3.2688
	%		0.9073		0.7586	0.8670				0.8495	1.0419
SPLEEN, PER	(G)		0.9766		0.8448	0.9225				0.7994	0.8295
	%		0.3071		0.2713	0.3008				0.2444	0.2644
BRAIN, PERF	(G)		2.1440		2.0921	2.1218				1.9964	1.8525
	%		0.6742		0.6718	0.6920				0.6105	0.5905
LIVER	(G)	6.3002		8.1720			6.4447	8.1750	7.6684		
	%	2.4875		3.1431			2.5307	3.1318	2.9621		
KIDNEYS	(G)	2.0065		2.2061			2.0984	1.8031	2.1119		
	%	0.7922		0.8485			0.8240	0.6908	0.8158		
SPLEEN	(G)	0.4652		0.4802			0.6128	0.4823	0.5087		
	%	0.1837		0.1847			0.2406	0.1848	0.1965		
BRAIN	(G)	1.8966		1.9933			2.0466	1.8097	1.9663		
	%	0.7488		0.7667			0.8037	0.6933	0.7595		

100.000 PPM GROUP - F

ANIMAL #		51	52	53	54	55	56	57	58	59	60
BODY WEIGHT	(G)	279.1	294.3	306.1	258.1	251.4	285.6	296.3	363.0	241.8	269.9
LIVER, PERF	(G)		9.9188				10.2536	9.5561	12.6532		10.0504
	%		3.3706				3.5899	3.2248	3.4853		3.7244
KIDNEYS, PE	(G)		2.8995				2.5895	2.6127	2.5596		2.6179
	%		0.9853				0.9066	0.8817	0.7050		0.9701
SPLEEN, PER	(G)		0.8300				0.7048	0.6621	0.7691		0.7936
	%		0.2821				0.2468	0.2234	0.2118		0.2941
BRAIN, PERF	(G)		2.0063				1.9800	1.9475	1.9188		2.0044
	%		0.6818				0.6932	0.6572	0.5285		0.7428
LIVER	(G)	8.0509		7.9395	7.0534	7.7048				8.0072	
	%	2.8842		2.5941	2.7330	3.0643				3.3109	
KIDNEYS	(G)	2.2091		1.8285	1.8853	1.9477				1.7770	
	%	0.7914		0.5974	0.7305	0.7746				0.7348	
SPLEEN	(G)	0.5221		0.5538	0.4797	0.4933				0.4565	
	%	0.1870		0.1809	0.1859	0.1962				0.1888	
BRAIN	(G)	1.9409		1.8922	1.9036	1.9295				1.9122	
	%	0.6953		0.6182	0.7376	0.7674				0.7907	

200.000 PPM GROUP - F

ANIMAL #		61	62	63	64	65	66	67	68	69	70
BODY WEIGHT	(G)	308.7	333.6	276.2	251.0	293.5	243.9	275.6	262.3	301.9	254.4
LIVER, PERF	(G)		15.8887	10.4118		11.9572				13.2432	8.9262
	%		4.7628	3.7702		4.0746				4.3873	3.5083
KIDNEYS, PE	(G)		3.6975	2.2935		2.9501				2.7316	2.6337
	%		1.1084	0.8305		1.0053				0.9050	1.0351
SPLEEN, PER	(G)		1.1753	0.6740		0.9909				0.7075	0.7422
	%		0.3523	0.2441		0.3377				0.2344	0.2917
BRAIN, PERF	(G)		1.9675	1.9601		1.9725				1.8467	2.0208
	%		0.5898	0.7098		0.6722				0.6118	0.7942
LIVER	(G)	8.1039			9.0378		6.4856	9.8102	7.3417		
	%	2.6253			3.6010		2.6588	3.5600	2.7989		
KIDNEYS	(G)	2.1589			1.9317		1.9435	2.2378	2.3489		
	%	0.6994			0.7697		0.7967	0.8121	0.8955		
SPLEEN	(G)	0.5388			0.5797		0.4600	0.5274	0.6063		
	%	0.1745			0.2310		0.1886	0.1914	0.2311		
BRAIN	(G)	1.8068			1.9679		1.9815	1.8609	1.9443		
	%	0.5853			0.7841		0.8123	0.6753	0.7412		

400.000 PPM GROUP - F

ANIMAL #		71	72	73	74	75	76	77	78	79	80
BODY WEIGHT	(G)	273.7	280.8	272.1		257.1	248.4	261.9	334.7	235.0	310.7
LIVER, PERF	(G)	12.8054			12.1885			9.2986	15.9850		12.8670
	%	4.6791						3.5503	4.7765		4.1414
KIDNEYS, PE	(G)	2.4725			2.6359			3.0283	3.1152		3.7106
	%	0.9035						1.1562	0.9309		1.1943
SPLEEN, PER	(G)	0.7126			1.0714			1.0977	1.1526		1.0070
	%	0.2604						0.4191	0.3444		0.3241
BRAIN, PERF	(G)	2.0070			1.9760			2.0120	1.9239		1.9048
	%	0.7334						0.7682	0.5749		0.6131
LIVER	(G)		9.4643	8.2112		7.8173	7.3888			8.0837	
	%		3.3702	3.0172		3.0400	2.9741			3.4405	
KIDNEYS	(G)		2.1748	1.9559		2.2124	2.3184			2.1235	
	%		0.7744	0.7187		0.8604	0.9332			0.9038	
SPLEEN	(G)		0.6327	0.9020		0.5577	0.6303			0.7820	
	%		0.2253	0.3314		0.2169	0.2537			0.3328	
BRAIN	(G)		2.0003	1.9264		1.9399	1.9303			1.9320	
	%		0.7123	0.7078		0.7544	0.7770			0.8223	

Study No. 88-0017I1 & I2
Acc. No. 907124

PATHOLOGY REPORT

Compound: Ethylene Glycol Monopropyl Ether

Male and female rats exposed to 0, 100, 200, or 400 ppm of the test material by inhalation for six hours per day for 67 days over a 99-day period, as part of a 90-day neurotoxicity study, were necropsied. Necropsy lesions are listed in computer-generated tables.

GROSS PATHOLOGY

No treatment-related changes were observed in any of the groups. All rats survived the 99-day observation period.

HISTOPATHOLOGY

Tissue selection included liver, kidneys, spleen, cross sections through the forebrain, cerebrum, midbrain, cerebellum, pons, medulla oblongata, cervical spinal cord swelling, lumber spinal cord swelling, cervical and lumbar dorsal root ganglia, dorsal and ventral spinal roots (cervical and lumbar), and cross and longitudinal sections of the sciatic nerve at mid-thigh and tibial nerve including branches to the calf musculature.

Five animals from each dose group that were designated for neuropathology examination were anesthetized with sodium pentobarbital containing heparin (10% by volume) and perfused through the ascending aorta. Perfusates were 4% paraformaldehyde followed by 5% glutaraldehyde both in 0.1 M phosphate buffer, pH 7.4, at 4°C. Following perfusion, the brain was removed from the cranium, the spinal cord was exposed by dorsal laminectomy, and both sciatic-tibial nerves were removed from the hindlimbs. Tissues for plastic embedment were fixed for an additional 2 hours in glutaraldehyde. Tissues from perfused animals not destined for plastic embedment and all tissues from unperfused animals were fixed in 10% neutral buffered formalin.

Tissues from perfused animals from the high-dose and control groups were processed by routine neuropathological techniques for paraffin embedment, hematoxylin-eosin staining, and light microscopic examination. Special stains (a combined Luxol Fast Blue Stain-Bodian silver protargol impregnation) were performed on perfused neural tissue from the high-dose and control groups. The left sciatic-tibial nerve and medulla oblongata from perfused high-dose and control groups were further fixed in an osmium tetroxide solution (Dalton's chrome-osmium solution), embedded in plastic (EPON), sectioned at 1µm, stained with toluidine blue, and examined by light microscopy. For storage, perfused tissues were transferred to 10% neutral buffered formalin.

Male Rats - 400 ppm dose group: Treatment-related changes consisted of hemosiderosis in the Kupffer cells of the liver (4/5) and proximal convoluted renal tubules (3/5), and increased severity of hemosiderosis in the splenic red pulp (5/5).

200 ppm dose group: Treatment-related changes consisted of hemosiderosis in the Kupffer cells of the liver (3/5) and proximal convoluted renal tubules (5/5), and increased severity of hemosiderosis in the splenic red pulp (5/5).

100 ppm dose group: No treatment-related changes were observed.

Female Rats - 400 ppm dose group: Treatment-related changes consisted of hemosiderosis in the Kupffer cells of the liver (5/5) and proximal convoluted renal tubules (5/5), and increased severity of hemosiderosis in the splenic red pulp (5/5).

200 ppm dose group: Treatment-related changes consisted of hemosiderosis in the Kupffer cells of the liver (5/5) and proximal convoluted renal tubules (5/5), and increased severity of hemosiderosis in the splenic red pulp (4/5).

100 ppm dose group: No treatment-related changes were observed.

All other lesions listed on the attached tables were not considered treatment-related.

In conclusion, the test article did not produce neuropathological changes in any of the organs examined. Only a golden globular pigment was observed in the kidneys and Kupffer cells of the liver, of both male and female rats exposed to 200 or 400 ppm of the test material. The pigment was morphologically similar to hemosiderin (hemosiderosis). The spleen, which normally contains hemosiderin, had increased amounts present in male and female rats exposed to 200 and 400 ppm of the test material. No cellular degeneration was associated with pigment deposition. The most likely source of the pigment was from increased red blood cell destruction and metabolism of heme pigments in the kidneys and liver.

Milan S. Vlaovic 8/20/89

Milan S. Vlaovic, D.V.M., Ph.D.

MSV:cpp
03/16/89

4477T

SUMMARY GROSS PATHOLOGY INCIDENCE TABLE

EXPERIMENT # 88001711 EXPERIMENT START DATE: 18-APR-88 COMPOUND # 88-0017
SOFTWARE VERS # 3.0
ACCESSION NUMBER 907124

GROUP	0.000 PPM M	100.000 PPM M	200.000 PPM M	400.000 PPM M
NASAL PASSAGES	10	10	10	10
TRACHEA	10	10	10	10
LUNGS	10	10	10	10
AORTA	10	10	10	10
ESOPHAGUS	10	10	10	10
STOMACH	10	10	10	10
DUODENUM	10	10	10	10
JEJUNUM	10	10	10	10
ILEUM	10	10	10	10
CECUM	10	10	10	10
COLON	10	10	10	10
RECTUM	10	10	10	10
URINARY BLADDER	10	10	10	10
PITUITARY GLAND	10	10	10	10
PANCREAS, NOS	10	10	10	10
THYROID GLANDS	10	10	10	10
PARATHYROID GLANDS	10	10	10	10
MESENTERIC LYMPH NODES	10	10	10	10
BONE MARROW	10	10	10	10
SCIATIC NERVE	10	10	10	10
RIB	10	10	10	10
SALIVARY GLANDS	10	10	10	10
CERVICAL SPINAL CORD	10	10	10	10
LUMBAR SPINAL CORD	10	10	10	10
SPINAL ROOTS, CERV. VENT.	10	10	10	10
SPINAL ROOTS, CERV. DORSAL	10	10	10	10
SPINAL ROOTS, LUMB. VENT.	10	10	10	10
SPINAL ROOTS, LUMB. DORSAL	10	10	10	10
DORSAL ROOT GANGLIA, CERVICAL	10	10	10	10
DORSAL ROOT GANGLIA, LUMBAR	10	10	10	10
TIBIAL NERVE	10	10	10	10

NUMBERS REPRESENT NUMBER OF TISSUES EXAMINED, OR IN THE CASE OF ABNORMAL FINDINGS, THE NUMBER OF TISSUES WITH EACH ABNORMALITY.

SUMMARY GROSS PATHOLOGY INCIDENCE TABLE

EXPERIMENT # 880017I1 EXPERIMENT START DATE: 18-APR-88 COMPOUND # 88-0017
SOFTWARE VERS # 3.0
ACCESSION NUMBER 907124

GROUP	0.000 PPM M	100.000 PPM M	200.000 PPM M	400.000 PPM M
THYMUS	10	10	10	10
HEMORRHAGE	0	1	0	1
ADRENALS	10	10	10	10
HEART	10	10	10	10
ACCESSORY SEX ORGANS (MALE)	10	10	10	10
EPIDIDYMIDES	10	10	10	10
TESTES	10	10	10	10
LIVER, PERFUSED	5	5	5	5
KIDNEYS, PERFUSED	5	5	5	5
SPLEEN, PERFUSED	5	5	5	5
BRAIN, PERFUSED	5	5	5	5
LIVER	5	5	5	5
KIDNEYS	5	5	5	5
HYDRONEPHROSIS, BILATERAL	1	0	0	0
SPLEEN	5	5	5	5
BRAIN	5	5	5	5
SKIN, NOS	1	0	0	0
SKIN OF ARM				
ALOPECIA	1	0	0	0

NUMBERS REPRESENT NUMBER OF TISSUES EXAMINED, OR IN THE CASE OF ABNORMAL FINDINGS, THE NUMBER OF TISSUES WITH EACH ABNORMALITY.

INDIVIDUAL ANIMAL GROSS PATHOLOGY INCIDENCE TABLE

EXPERIMENT # 88001711 EXPERIMENT START DATE: 18-APR-88 COMPOUND # 88-0017
SOFTWARE VERS # 3.0
ACCESSION NUMBER 907124

0.000 PPM GROUP - M

ANIMAL #	1	2	3	4	5	6	7	8	9	10
DAYS ON TEST	99	99	99	99	99	99	99	99	99	99
NASAL PASSAGES	X	X	X	X	X	X	X	X	X	X
TRACHEA	X	X	X	X	X	X	X	X	X	X
LUNGS	X	X	X	X	X	X	X	X	X	X
AORTA	X	X	X	X	X	X	X	X	X	X
ESOPHAGUS	X	X	X	X	X	X	X	X	X	X
STOMACH	X	X	X	X	X	X	X	X	X	X
DUODENUM	X	X	X	X	X	X	X	X	X	X
JEJUNUM	X	X	X	X	X	X	X	X	X	X
ILEUM	X	X	X	X	X	X	X	X	X	X
CECUM	X	X	X	X	X	X	X	X	X	X
COLON	X	X	X	X	X	X	X	X	X	X
RECTUM	X	X	X	X	X	X	X	X	X	X
URINARY BLADDER	X	X	X	X	X	X	X	X	X	X
PITUITARY GLAND	X	X	X	X	X	X	X	X	X	X
PANCREAS, NOS	X	X	X	X	X	X	X	X	X	X
THYROID GLANDS	X	X	X	X	X	X	X	X	X	X
PARATHYROID GLANDS	X	X	X	X	X	X	X	X	X	X
MESENTERIC LYMPH NODES	X	X	X	X	X	X	X	X	X	X
BONE MARROW	X	X	X	X	X	X	X	X	X	X
SCIATIC NERVE	N	N	N	N	N	N	N	N	N	N
RIB	X	X	X	X	X	X	X	X	X	X
SALIVARY GLANDS	X	X	X	X	X	X	X	X	X	X
CERVICAL SPINAL CORD	N	N	N	N	N	N	N	N	N	N
LUMBAR SPINAL CORD	N	N	N	N	N	N	N	N	N	N
SPINAL ROOTS, CERV. VENT.	N	N	N	N	N	N	N	N	N	N
SPINAL ROOTS, CERV. DORSAL	N	N	N	N	N	N	N	N	N	N
SPINAL ROOTS, LUMB. VENT.	N	N	N	N	N	N	N	N	N	N
SPINAL ROOTS, LUMB. DORSAL	N	N	N	N	N	N	N	N	N	N
DORSAL ROOT GANGLIA, CERVICAL	N	N	N	N	N	N	N	N	N	N
DORSAL ROOT GANGLIA, LUMBAR	N	N	N	N	N	N	N	N	N	N
TIBIAL NERVE	N	N	N	N	N	N	N	N	N	N
THYMUS	X	X	X	X	X	X	X	X	X	X
ADRENALS	X	X	X	X	X	X	X	X	X	X
HEART	X	X	X	X	X	X	X	X	X	X
ACCESSORY SEX ORGANS (MALE)	X	X	X	X	X	X	X	X	X	X
EPIDIDYMIDES	X	X	X	X	X	X	X	X	X	X
TESTES	X	X	X	X	X	X	X	X	X	X

KEY:N-NORMAL AND TISSUE COLLECTED FOR HISTOPATHOLOGY,1-MINIMAL,2-MINOR,3-MODERATE,4-SEVERE
P-PRESENT,A-ABSENT,*-SEE COMMENT REPORT (FORM #2), X=NORMAL BUT NOT COLLECTED

INDIVIDUAL ANIMAL GROSS PATHOLOGY INCIDENCE TABLE

EXPERIMENT # 880017I1 EXPERIMENT START DATE: 18-APR-88 COMPOUND # 88-0017
SOFTWARE VERS # 3.0
ACCESSION NUMBER 907124

	0.000 PPM GROUP - M									
ANIMAL #	1	2	3	4	5	6	7	8	9	10
DAYS ON TEST	99	99	99	99	99	99	99	99	99	99
LIVER, PERFUSED				N		N		N	N	N
KIDNEYS, PERFUSED				N		N		N	N	N
SPLEEN, PERFUSED				N		N		N	N	N
BRAIN, PERFUSED				N		N		N	N	N
LIVER	N	N	N		N		N			
KIDNEYS	N		N		N		N			
HYDRONEPHROSIS, BILATERAL		2								
SPLEEN	N	N	N		N		N			
BRAIN	N	N	N		N		N			
SKIN, NOS										
SKIN OF ARM										
ALOPECIA									3	

KEY:N-NORMAL AND TISSUE COLLECTED FOR HISTOPATHOLOGY,1-MINIMAL,2-MINOR,3-MODERATE,4-SEVERE
P-PRESENT,A-ABSENT,*-SEE COMMENT REPORT (FORM #2), X=NORMAL BUT NOT COLLECTED

INDIVIDUAL ANIMAL GROSS PATHOLOGY INCIDENCE TABLE

EXPERIMENT # 88001711 EXPERIMENT START DATE: 18-APR-88 COMPOUND # 88-0017
SOFTWARE VERS # 3.0
ACCESSION NUMBER 907124

100.000 PPM GROUP - M

ANIMAL #	11	12	13	14	15	16	17	18	19	20
DAYS ON TEST	99	99	99	99	99	99	99	99	99	99
NASAL PASSAGES	X	X	X	X	X	X	X	X	X	X
TRACHEA	X	X	X	X	X	X	X	X	X	X
LUNGS	X	X	X	X	X	X	X	X	X	X
AORTA	X	X	X	X	X	X	X	X	X	X
ESOPHAGUS	X	X	X	X	X	X	X	X	X	X
STOMACH	X	X	X	X	X	X	X	X	X	X
DUODENUM	X	X	X	X	X	X	X	X	X	X
JEJUNUM	X	X	X	X	X	X	X	X	X	X
ILEUM	X	X	X	X	X	X	X	X	X	X
CECUM	X	X	X	X	X	X	X	X	X	X
COLON	X	X	X	X	X	X	X	X	X	X
RECTUM	X	X	X	X	X	X	X	X	X	X
URINARY BLADDER	X	X	X	X	X	X	X	X	X	X
PITUITARY GLAND	X	X	X	X	X	X	X	X	X	X
PANCREAS, NOS	X	X	X	X	X	X	X	X	X	X
THYROID GLANDS	X	X	X	X	X	X	X	X	X	X
PARATHYROID GLANDS	X	X	X	X	X	X	X	X	X	X
MESENTERIC LYMPH NODES	X	X	X	X	X	X	X	X	X	X
BONE MARROW	X	X	X	X	X	X	X	X	X	X
SCIATIC NERVE	N	N	N	N	N	N	N	N	N	N
RIB	X	X	X	X	X	X	X	X	X	X
SALIVARY GLANDS	X	X	X	X	X	X	X	X	X	X
CERVICAL SPINAL CORD	N	N	N	N	N	N	N	N	N	N
LUMBAR SPINAL CORD	N	N	N	N	N	N	N	N	N	N
SPINAL ROOTS, CERV. VENT.	N	N	N	N	N	N	N	N	N	N
SPINAL ROOTS, CERV. DORSAL	N	N	N	N	N	N	N	N	N	N
SPINAL ROOTS, LUMB. VENT.	N	N	N	N	N	N	N	N	N	N
SPINAL ROOTS, LUMB. DORSAL	N	N	N	N	N	N	N	N	N	N
DORSAL ROOT GANGLIA, CERVICAL	N	N	N	N	N	N	N	N	N	N
DORSAL ROOT GANGLIA, LUMBAR	N	N	N	N	N	N	N	N	N	N
TIBIAL NERVE	N	N	N	N	N	N	N	N	N	N
THYMUS		X	X	X	X	X	X	X	X	X
HEMORRHAGE	1									
ADRENALS	X	X	X	X	X	X	X	X	X	X
HEART	X	X	X	X	X	X	X	X	X	X
ACCESSORY SEX ORGANS (MALE)	X	X	X	X	X	X	X	X	X	X
EPIDIDYMIDES	X	X	X	X	X	X	X	X	X	X
TESTES	X	X	X	X	X	X	X	X	X	X

KEY:N-NORMAL AND TISSUE COLLECTED FOR HISTOPATHOLOGY,1-MINIMAL,2-MINOR,3-MODERATE,4-SEVERE
P-PRESENT,A-ABSENT,*-SEE COMMENT REPORT (FORM #2), X=NORMAL BUT NOT COLLECTED

INDIVIDUAL ANIMAL GROSS PATHOLOGY INCIDENCE TABLE

EXPERIMENT # 880017I1 EXPERIMENT START DATE: 18-APR-88 COMPOUND # 88-0017
SOFTWARE VERS # 3.0
ACCESSION NUMBER 907124

100.000 PPM GROUP - M

ANIMAL #	11	12	13	14	15	16	17	18	19	20
DAYS ON TEST	99	99	99	99	99	99	99	99	99	99
LIVER, PERFUSED		N		N	N	N			N	
KIDNEYS, PERFUSED		N		N	N	N			N	
SPLEEN, PERFUSED		N		N	N	N			N	
BRAIN, PERFUSED		N		N	N	N			N	
LIVER	N		N				N	N		N
KIDNEYS	N		N				N	N		N
SPLEEN	N		N				N	N		N
BRAIN	N		N				N	N		N

KEY:N-NORMAL AND TISSUE COLLECTED FOR HISTOPATHOLOGY,1-MINIMAL,2-MINOR,3-MODERATE,4-SEVERE
P-PRESENT,A-ABSENT,*-SEE COMMENT REPORT (FORM #2), X=NORMAL BUT NOT COLLECTED

INDIVIDUAL ANIMAL GROSS PATHOLOGY INCIDENCE TABLE

EXPERIMENT # 880017I1 EXPERIMENT START DATE: 18-APR-88 COMPOUND # 88-0017
SOFTWARE VERS # 3.0
ACCESSION NUMBER 907124

200.000 PPM GROUP - M

ANIMAL #	21	22	23	24	25	26	27	28	29	30
DAYS ON TEST	99	99	99	99	99	99	99	99	99	99
NASAL PASSAGES	X	X	X	X	X	X	X	X	X	X
TRACHEA	X	X	X	X	X	X	X	X	X	X
LUNGS	X	X	X	X	X	X	X	X	X	X
AORTA	X	X	X	X	X	X	X	X	X	X
ESOPHAGUS	X	X	X	X	X	X	X	X	X	X
STOMACH	X	X	X	X	X	X	X	X	X	X
DUODENUM	X	X	X	X	X	X	X	X	X	X
JEJUNUM	X	X	X	X	X	X	X	X	X	X
ILEUM	X	X	X	X	X	X	X	X	X	X
CECUM	X	X	X	X	X	X	X	X	X	X
COLON	X	X	X	X	X	X	X	X	X	X
RECTUM	X	X	X	X	X	X	X	X	X	X
URINARY BLADDER	X	X	X	X	X	X	X	X	X	X
PITUITARY GLAND	X	X	X	X	X	X	X	X	X	X
PANCREAS, NOS	X	X	X	X	X	X	X	X	X	X
THYROID GLANDS	X	X	X	X	X	X	X	X	X	X
PARATHYROID GLANDS	X	X	X	X	X	X	X	X	X	X
MESENTERIC LYMPH NODES	X	X	X	X	X	X	X	X	X	X
BONE MARROW	X	X	X	X	X	X	X	X	X	X
SCIATIC NERVE	N	N	N	N	N	N	N	N	N	N
RIB	X	X	X	X	X	X	X	X	X	X
SALIVARY GLANDS	X	X	X	X	X	X	X	X	X	X
CERVICAL SPINAL CORD	N	N	N	N	N	N	N	N	N	N
LUMBAR SPINAL CORD	N	N	N	N	N	N	N	N	N	N
SPINAL ROOTS, CERV. VENT.	N	N	N	N	N	N	N	N	N	N
SPINAL ROOTS, CERV. DORSAL	N	N	N	N	N	N	N	N	N	N
SPINAL ROOTS, LUMB. VENT.	N	N	N	N	N	N	N	N	N	N
SPINAL ROOTS, LUMB. DORSAL	N	N	N	N	N	N	N	N	N	N
DORSAL ROOT GANGLIA, CERVICAL	N	N	N	N	N	N	N	N	N	N
DORSAL ROOT GANGLIA, LUMBAR	N	N	N	N	N	N	N	N	N	N
TIBIAL NERVE	N	N	N	N	N	N	N	N	N	N
THYMUS	X	X	X	X	X	X	X	X	X	X
ADRENALS	X	X	X	X	X	X	X	X	X	X
HEART	X	X	X	X	X	X	X	X	X	X
ACCESSORY SEX ORGANS (MALE)	X	X	X	X	X	X	X	X	X	X
EPIDIDYMIDES	X	X	X	X	X	X	X	X	X	X
TESTES	X	X	X	X	X	X	X	X	X	X

KEY:N-NORMAL AND TISSUE COLLECTED FOR HISTOPATHOLOGY,1-MINIMAL,2-MINOR,3-MODERATE,4-SEVERE
P-PRESENT,A-ABSENT,*-SEE COMMENT REPORT (FORM #2), X=NORMAL BUT NOT COLLECTED

INDIVIDUAL ANIMAL GROSS PATHOLOGY INCIDENCE TABLE

EXPERIMENT # 880017I1 EXPERIMENT START DATE: 18-APR-88 COMPOUND # 88-0017
SOFTWARE VERS # 3.0
ACCESSION NUMBER 907124

200.000 PPM GROUP - M

ANIMAL #	21	22	23	24	25	26	27	28	29	30
DAYS ON TEST	99	99	99	99	99	99	99	99	99	99
LIVER, PERFUSED		N		N	N	N		N		
KIDNEYS, PERFUSED		N		N	N	N		N		
SPLEEN, PERFUSED		N		N	N	N		N		
BRAIN, PERFUSED		N		N	N	N		N		
LIVER	N		N				N		N	N
KIDNEYS	N		N				N		N	N
SPLEEN	N		N				N		N	N
BRAIN	N		N				N		N	N

KEY:N-NORMAL AND TISSUE COLLECTED FOR HISTOPATHOLOGY,1-MINIMAL,2-MINOR,3-MODERATE,4-SEVERE
P-PRESENT,A-ABSENT,*-SEE COMMENT REPORT (FORM #2), X=NORMAL BUT NOT COLLECTED

INDIVIDUAL ANIMAL GROSS PATHOLOGY INCIDENCE TABLE

EXPERIMENT # 880017I1 EXPERIMENT START DATE: 18-APR-88 COMPOUND # 88-0017
SOFTWARE VERS # 3.0
ACCESSION NUMBER 907124

400.000 PPM GROUP - M

ANIMAL #	31	32	33	34	35	36	37	38	39	40
DAYS ON TEST	99	99	99	99	99	99	99	99	99	99
NASAL PASSAGES	X	X	X	X	X	X	X	X	X	X
TRACHEA	X	X	X	X	X	X	X	X	X	X
LUNGS	X	X	X	X	X	X	X	X	X	X
AORTA	X	X	X	X	X	X	X	X	X	X
ESOPHAGUS	X	X	X	X	X	X	X	X	X	X
STOMACH	X	X	X	X	X	X	X	X	X	X
DUODENUM	X	X	X	X	X	X	X	X	X	X
JEJUNUM	X	X	X	X	X	X	X	X	X	X
ILEUM	X	X	X	X	X	X	X	X	X	X
CECUM	X	X	X	X	X	X	X	X	X	X
COLON	X	X	X	X	X	X	X	X	X	X
RECTUM	X	X	X	X	X	X	X	X	X	X
URINARY BLADDER	X	X	X	X	X	X	X	X	X	X
PITUITARY GLAND	X	X	X	X	X	X	X	X	X	X
PANCREAS, NOS	X	X	X	X	X	X	X	X	X	X
THYROID GLANDS	X	X	X	X	X	X	X	X	X	X
PARATHYROID GLANDS	X	X	X	X	X	X	X	X	X	X
MESENTERIC LYMPH NODES	X	X	X	X	X	X	X	X	X	X
BONE MARROW	X	X	X	X	X	X	X	X	X	X
SCIATIC NERVE	N	N	N	N	N	N	N	N	N	N
RIB	X	X	X	X	X	X	X	X	X	X
SALIVARY GLANDS	X	X	X	X	X	X	X	X	X	X
CERVICAL SPINAL CORD	N	N	N	N	N	N	N	N	N	N
LUMBAR SPINAL CORD	N	N	N	N	N	N	N	N	N	N
SPINAL ROOTS, CERV. VENT.	N	N	N	N	N	N	N	N	N	N
SPINAL ROOTS, CERV. DORSAL	N	N	N	N	N	N	N	N	N	N
SPINAL ROOTS, LUMB. VENT.	N	N	N	N	N	N	N	N	N	N
SPINAL ROOTS, LUMB. DORSAL	N	N	N	N	N	N	N	N	N	N
DORSAL ROOT GANGLIA, CERVICAL	N	N	N	N	N	N	N	N	N	N
DORSAL ROOT GANGLIA, LUMBAR	N	N	N	N	N	N	N	N	N	N
TIBIAL NERVE	N	N	N	N	N	N	N	N	N	N
THYMUS	X	X	X	X	X	X	X	X	X	
HEMORRHAGE										2
ADRENALS	X	X	X	X	X	X	X	X	X	X
HEART	X	X	X	X	X	X	X	X	X	X
ACCESSORY SEX ORGANS (MALE)	X	X	X	X	X	X	X	X	X	X
EPIDIDYMIDES	X	X	X	X	X	X	X	X	X	X
TESTES	X	X	X	X	X	X	X	X	X	X

KEY:N-NORMAL AND TISSUE COLLECTED FOR HISTOPATHOLOGY,1-MINIMAL,2-MINOR,3-MODERATE,4-SEVERE
P-PRESENT,A-ABSENT,*-SEE COMMENT REPORT (FORM #2), X=NORMAL BUT NOT COLLECTED

INDIVIDUAL ANIMAL GROSS PATHOLOGY INCIDENCE TABLE

EXPERIMENT # 880017I1 EXPERIMENT START DATE: 18-APR-88 COMPOUND # 88-0017
SOFTWARE VERS # 3.0
ACCESSION NUMBER 907124

400.000 PPM GROUP - M

ANIMAL #	31	32	33	34	35	36	37	38	39	40
DAYS ON TEST	99	99	99	99	99	99	99	99	99	99
KIDNEYS, PERFUSED			N	N		N	N	N		
SPLEEN, PERFUSED			N	N		N	N	N		
BRAIN, PERFUSED			N	N		N	N	N		
LIVER, PERFUSED			N	N		N	N	N		
LIVER	N	N			N				N	N
KIDNEYS	N	N			N				N	N
SPLEEN	N	N			N				N	N
BRAIN	N	N			N				N	N

KEY:N-NORMAL AND TISSUE COLLECTED FOR HISTOPATHOLOGY,1-MINIMAL,2-MINOR,3-MODERATE,4-SEVERE
P-PRESENT,A-ABSENT,*-SEE COMMENT REPORT (FORM #2), X=NORMAL BUT NOT COLLECTED

SUMMARY GROSS PATHOLOGY INCIDENCE TABLE

EXPERIMENT # 88001712 EXPERIMENT START DATE: 25-APR-88 COMPOUND # 88-0017
SOFTWARE VERS # 3.0
ACCESSION NUMBER 907124

GROUP	0.000 PPM F	100.000 PPM F	200.000 PPM F	400.000 PPM F
NASAL PASSAGES	10	10	10	10
TRACHEA	10	10	10	10
LUNGS	10	10	10	10
AORTA	10	10	10	10
ESOPHAGUS	10	10	10	10
STOMACH	10	10	10	10
DUODENUM	10	10	10	10
JEJUNUM	10	10	10	10
ILEUM	10	10	10	10
CECUM	10	10	10	10
COLON	10	10	10	10
RECTUM	10	10	10	10
URINARY BLADDER	10	10	10	10
PITUITARY GLAND	10	10	10	10
PANCREAS, NOS	10	10	10	10
THYROID GLANDS	10	10	10	10
PARATHYROID GLANDS	10	10	10	10
MESENTERIC LYMPH NODES	10	10	10	10
BONE MARROW	10	10	10	10
SCIATIC NERVE	10	10	10	10
RIB	10	10	10	10
SALIVARY GLANDS	10	10	10	10
LUMBAR SPINAL CORD	10	10	10	10
CERVICAL SPINAL CORD	10	10	10	10
SPINAL ROOTS, CERV. VENT.	10	10	10	10
SPINAL ROOTS, CERV. DORSAL	10	10	10	10
SPINAL ROOTS, LUMB. VENT.	10	10	10	10
SPINAL ROOTS, LUMB. DORSAL	10	10	10	10
DORSAL ROOT GANGLIA, CERVICAL	10	10	10	10
DORSAL ROOT GANGLIA, LUMBAR	10	10	10	10
TIBIAL NERVE	10	10	10	10
THYMUS	10	10	10	10

NUMBERS REPRESENT NUMBER OF TISSUES EXAMINED, OR IN THE CASE OF ABNORMAL FINDINGS, THE NUMBER OF TISSUES WITH EACH ABNORMALITY.

SUMMARY GROSS PATHOLOGY INCIDENCE TABLE

EXPERIMENT # 88001712 EXPERIMENT START DATE: 25-APR-88 COMPOUND # 88-0017
SOFTWARE VERS # 3.0
ACCESSION NUMBER 907124

GROUP	0.000 PPM F	100.000 PPM F	200.000 PPM F	400.000 PPM F
ADRENALS	10	10	10	10
HEART	10	10	10	10
FALLOPIAN TUBES	10	10	10	10
VAGINA	10	10	10	10
UTERUS	10	10	10	10
HYDROMETRA	1	2	1	0
OVARIES	10	10	10	10
LIVER, PERFUSED	5	5	5	5
KIDNEYS, PERFUSED	5	5	5	5
SPLEEN, PERFUSED	5	5	5	5
BRAIN, PERFUSED	5	5	5	5
LIVER	5	5	5	5
KIDNEYS	5	5	5	5
SPLEEN	5	5	5	5
BRAIN	5	5	5	5
SKIN, NOS	0	1	1	0
SKIN OF ARM				
ALOPECIA	0	1	1	0
SKIN OF NECK				
ALOPECIA	0	0	1	0

NUMBERS REPRESENT NUMBER OF TISSUES EXAMINED, OR IN THE CASE OF ABNORMAL FINDINGS, THE NUMBER OF TISSUES WITH EACH ABNORMALITY.

INDIVIDUAL ANIMAL GROSS PATHOLOGY INCIDENCE TABLE

EXPERIMENT # 88001712 EXPERIMENT START DATE: 25-APR-88 COMPOUND # 88-0017
SOFTWARE VERS # 3.0
ACCESSION NUMBER 907124

0.000 PPM GROUP - F

ANIMAL #	41	42	43	44	45	46	47	48	49	50
DAYS ON TEST	99	99	99	99	99	99	99	99	99	99
NASAL PASSAGES	X	X	X	X	X	X	X	X	X	X
TRACHEA	X	X	X	X	X	X	X	X	X	X
LUNGS	X	X	X	X	X	X	X	X	X	X
AORTA	X	X	X	X	X	X	X	X	X	X
ESOPHAGUS	X	X	X	X	X	X	X	X	X	X
STOMACH	X	X	X	X	X	X	X	X	X	X
DUODENUM	X	X	X	X	X	X	X	X	X	X
JEJUNUM	X	X	X	X	X	X	X	X	X	X
ILEUM	X	X	X	X	X	X	X	X	X	X
CECUM	X	X	X	X	X	X	X	X	X	X
COLON	X	X	X	X	X	X	X	X	X	X
RECTUM	X	X	X	X	X	X	X	X	X	X
URINARY BLADDER	X	X	X	X	X	X	X	X	X	X
PITUITARY GLAND	X	X	X	X	X	X	X	X	X	X
PANCREAS, NOS	X	X	X	X	X	X	X	X	X	X
THYROID GLANDS	X	X	X	X	X	X	X	X	X	X
PARATHYROID GLANDS	X	X	X	X	X	X	X	X	X	X
MESENTERIC LYMPH NODES	X	X	X	X	X	X	X	X	X	X
BONE MARROW	X	X	X	X	X	X	X	X	X	X
SCIATIC NERVE	N	N	N	N	N	N	N	N	N	N
RIB	X	X	X	X	X	X	X	X	X	X
SALIVARY GLANDS	X	X	X	X	X	X	X	X	X	X
LUMBAR SPINAL CORD	N	N	N	N	N	N	N	N	N	N
CERVICAL SPINAL CORD	N	N	N	N	N	N	N	N	N	N
SPINAL ROOTS, CERV. VENT.	N	N	N	N	N	N	N	N	N	N
SPINAL ROOTS, CERV. DORSAL	N	N	N	N	N	N	N	N	N	N
SPINAL ROOTS, LUMB. VENT.	N	N	N	N	N	N	N	N	N	N
SPINAL ROOTS, LUMB. DORSAL	N	N	N	N	N	N	N	N	N	N
DORSAL ROOT GANGLIA, CERVICAL	N	N	N	N	N	N	N	N	N	N
DORSAL ROOT GANGLIA, LUMBAR	N	N	N	N	N	N	N	N	N	N
TIBIAL NERVE	N	N	N	N	N	N	N	N	N	N
THYMUS	X	X	X	X	X	X	X	X	X	X
ADRENALS	X	X	X	X	X	X	X	X	X	X
HEART	X	X	X	X	X	X	X	X	X	X
FALLOPIAN TUBES	X	X	X	X	X	X	X	X	X	X
VAGINA	X	X	X	X	X	X	X	X	X	X
UTERUS	X	X	X	X	X		X	X	X	X
HYDROMETRA						2				

KEY:N-NORMAL AND TISSUE COLLECTED FOR HISTOPATHOLOGY,1-MINIMAL,2-MINOR,3-MODERATE,4-SEVERE
P-PRESENT,A-ABSENT,*-SEE COMMENT REPORT (FORM #2), X=NORMAL BUT NOT COLLECTED

INDIVIDUAL ANIMAL GROSS PATHOLOGY INCIDENCE TABLE

EXPERIMENT # 880017I2 EXPERIMENT START DATE: 25-APR-88 COMPOUND # 88-0017
SOFTWARE VERS # 3.0
ACCESSION NUMBER 907124

	0.000 PPM		GROUP - F							
ANIMAL #	41	42	43	44	45	46	47	48	49	50
DAYS ON TEST	99	99	99	99	99	99	99	99	99	99
OVARIES	X	X	X	X	X	X	X	X	X	X
LIVER, PERFUSED		N		N	N				N	N
KIDNEYS, PERFUSED		N		N	N				N	N
SPLEEN, PERFUSED		N		N	N				N	N
BRAIN, PERFUSED		N		N	N				N	N
LIVER	N		N			N	N	N		
KIDNEYS	N		N			N	N	N		
SPLEEN	N		N			N	N	N		
BRAIN	N		N			N	N	N		

KEY:N-NORMAL AND TISSUE COLLECTED FOR HISTOPATHOLOGY,1-MINIMAL,2-MINOR,3-MODERATE,4-SEVERE
P-PRESENT,A-ABSENT,*-SEE COMMENT REPORT (FORM #2), X=NORMAL BUT NOT COLLECTED

INDIVIDUAL ANIMAL GROSS PATHOLOGY INCIDENCE TABLE

EXPERIMENT # 88001712 EXPERIMENT START DATE: 25-APR-88 COMPOUND # 88-0017
SOFTWARE VERS # 3.0
ACCESSION NUMBER 907124

100.000 PPM GROUP - F

ANIMAL #	51	52	53	54	55	56	57	58	59	60
DAYS ON TEST	99	99	99	99	99	99	99	99	99	99
NASAL PASSAGES	X	X	X	X	X	X	X	X	X	X
TRACHEA	X	X	X	X	X	X	X	X	X	X
LUNGS	X	X	X	X	X	X	X	X	X	X
AORTA	X	X	X	X	X	X	X	X	X	X
ESOPHAGUS	X	X	X	X	X	X	X	X	X	X
STOMACH	X	X	X	X	X	X	X	X	X	X
DUODENUM	X	X	X	X	X	X	X	X	X	X
JEJUNUM	X	X	X	X	X	X	X	X	X	X
ILEUM	X	X	X	X	X	X	X	X	X	X
CECUM	X	X	X	X	X	X	X	X	X	X
COLON	X	X	X	X	X	X	X	X	X	X
RECTUM	X	X	X	X	X	X	X	X	X	X
URINARY BLADDER	X	X	X	X	X	X	X	X	X	X
PITUITARY GLAND	X	X	X	X	X	X	X	X	X	X
PANCREAS, NOS	X	X	X	X	X	X	X	X	X	X
THYROID GLANDS	X	X	X	X	X	X	X	X	X	X
PARATHYROID GLANDS	X	X	X	X	X	X	X	X	X	X
MESENTERIC LYMPH NODES	X	X	X	X	X	X	X	X	X	X
BONE MARROW	X	X	X	X	X	X	X	X	X	X
SCIATIC NERVE	N	N	N	N	N	N	N	N	N	N
RIB	X	X	X	X	X	X	X	X	X	X
SALIVARY GLANDS	X	X	X	X	X	X	X	X	X	X
LUMBAR SPINAL CORD	N	N	N	N	N	N	N	N	N	N
CERVICAL SPINAL CORD	N	N	N	N	N	N	N	N	N	N
SPINAL ROOTS, CERV. VENT.	N	N	N	N	N	N	N	N	N	N
SPINAL ROOTS, CERV. DORSAL	N	N	N	N	N	N	N	N	N	N
SPINAL ROOTS, LUMB. VENT.	N	N	N	N	N	N	N	N	N	N
SPINAL ROOTS, LUMB. DORSAL	N	N	N	N	N	N	N	N	N	N
DORSAL ROOT GANGLIA, CERVICAL	N	N	N	N	N	N	N	N	N	N
DORSAL ROOT GANGLIA, LUMBAR	N	N	N	N	N	N	N	N	N	N
TIBIAL NERVE	N	N	N	N	N	N	N	N	N	N
THYMUS	X	X	X	X	X	X	X	X	X	X
ADRENALS	X	X	X	X	X	X	X	X	X	X
HEART	X	X	X	X	X	X	X	X	X	X
FALLOPIAN TUBES	X	X	X	X	X	X	X	X	X	X
VAGINA	X	X	X	X	X	X	X	X	X	X
UTERUS	X	X	X			X	X	X	X	X
HYDROMETRA				2	2					

KEY:N-NORMAL AND TISSUE COLLECTED FOR HISTOPATHOLOGY,1-MINIMAL,2-MINOR,3-MODERATE,4-SEVERE
P-PRESENT,A-ABSENT,*-SEE COMMENT REPORT (FORM #2), X=NORMAL BUT NOT COLLECTED

INDIVIDUAL ANIMAL GROSS PATHOLOGY INCIDENCE TABLE

EXPERIMENT # 88001712 EXPERIMENT START DATE: 25-APR-88 COMPOUND # 88-0017
SOFTWARE VERS # 3.0
ACCESSION NUMBER 907124

100.000 PPM GROUP - F

ANIMAL #	51	52	53	54	55	56	57	58	59	60
DAYS ON TEST	99	99	99	99	99	99	99	99	99	99
OVARIES	X	X	X	X	X	X	X	X	X	X
LIVER, PERFUSED		N				N	N	N		N
KIDNEYS, PERFUSED		N				N	N	N		N
SPLEEN, PERFUSED		N				N	N	N		N
BRAIN, PERFUSED		N				N	N	N		N
LIVER	N		N	N	N				N	
KIDNEYS	N		N	N	N				N	
SPLEEN	N		N	N	N				N	
BRAIN	N		N	N	N				N	
SKIN, NOS										
SKIN OF ARM										
ALOPECIA				2						

KEY:N-NORMAL AND TISSUE COLLECTED FOR HISTOPATHOLOGY,1-MINIMAL,2-MINOR,3-MODERATE,4-SEVERE
P-PRESENT,A-ABSENT,*-SEE COMMENT REPORT (FORM #2), X=NORMAL BUT NOT COLLECTED

INDIVIDUAL ANIMAL GROSS PATHOLOGY INCIDENCE TABLE

EXPERIMENT # 88001712 EXPERIMENT START DATE: 25-APR-88 COMPOUND # 88-0017
SOFTWARE VERS # 3.0
ACCESSION NUMBER 907124

200.000 PPM GROUP - F

ANIMAL #	61	62	63	64	65	66	67	68	69	70
DAYS ON TEST	99	99	99	99	99	99	99	99	99	99
NASAL PASSAGES	X	X	X	X	X	X	X	X	X	X
TRACHEA	X	X	X	X	X	X	X	X	X	X
LUNGS	X	X	X	X	X	X	X	X	X	X
AORTA	X	X	X	X	X	X	X	X	X	X
ESOPHAGUS	X	X	X	X	X	X	X	X	X	X
STOMACH	X	X	X	X	X	X	X	X	X	X
DUODENUM	X	X	X	X	X	X	X	X	X	X
JEJUNUM	X	X	X	X	X	X	X	X	X	X
ILEUM	X	X	X	X	X	X	X	X	X	X
CECUM	X	X	X	X	X	X	X	X	X	X
COLON	X	X	X	X	X	X	X	X	X	X
RECTUM	X	X	X	X	X	X	X	X	X	X
URINARY BLADDER	X	X	X	X	X	X	X	X	X	X
PITUITARY GLAND	X	X	X	X	X	X	X	X	X	X
PANCREAS, NOS	X	X	X	X	X	X	X	X	X	X
THYROID GLANDS	X	X	X	X	X	X	X	X	X	X
PARATHYROID GLANDS	X	X	X	X	X	X	X	X	X	X
MESENTERIC LYMPH NODES	X	X	X	X	X	X	X	X	X	X
BONE MARROW	X	X	X	X	X	X	X	X	X	X
SCIATIC NERVE	N	N	N	N	N	N	N	N	N	N
RIB	X	X	X	X	X	X	X	X	X	X
SALIVARY GLANDS	X	X	X	X	X	X	X	X	X	X
LUMBAR SPINAL CORD	N	N	N	N	N	N	N	N	N	N
CERVICAL SPINAL CORD	N	N	N	N	N	N	N	N	N	N
SPINAL ROOTS, CERV. VENT.	N	N	N	N	N	N	N	N	N	N
SPINAL ROOTS, CERV. DORSAL	N	N	N	N	N	N	N	N	N	N
SPINAL ROOTS, LUMB. VENT.	N	N	N	N	N	N	N	N	N	N
SPINAL ROOTS, LUMB. DORSAL	N	N	N	N	N	N	N	N	N	N
DORSAL ROOT GANGLIA, CERVICAL	N	N	N	N	N	N	N	N	N	N
DORSAL ROOT GANGLIA, LUMBAR	N	N	N	N	N	N	N	N	N	N
TIBIAL NERVE	N	N	N	N	N	N	N	N	N	N
THYMUS	X	X	X	X	X	X	X	X	X	X
ADRENALS	X	X	X	X	X	X	X	X	X	X
HEART	X	X	X	X	X	X	X	X	X	X
FALLOPIAN TUBES	X	X	X	X	X	X	X	X	X	X
VAGINA	X	X	X	X	X	X	X	X	X	X
UTERUS	X	X	X	X	X		X	X	X	X
HYDROMETRA						2				

KEY:N-NORMAL AND TISSUE COLLECTED FOR HISTOPATHOLOGY,1-MINIMAL,2-MINOR,3-MODERATE,4-SEVERE
P-PRESENT,A-ABSENT,*-SEE COMMENT REPORT (FORM #2), X=NORMAL BUT NOT COLLECTED

INDIVIDUAL ANIMAL GROSS PATHOLOGY INCIDENCE TABLE

EXPERIMENT # 88001712 EXPERIMENT START DATE: 25-APR-88 COMPOUND # 88-0017
SOFTWARE VERS # 3.0
ACCESSION NUMBER 907124

200.000 PPM GROUP - F

ANIMAL #	61	62	63	64	65	66	67	68	69	70
DAYS ON TEST	99	99	99	99	99	99	99	99	99	99
OVARIES	X	X	X	X	X	X	X	X	X	X
LIVER, PERFUSED		N	N		N				N	N
KIDNEYS, PERFUSED		N	N		N				N	N
SPLEEN, PERFUSED		N	N		N				N	N
BRAIN, PERFUSED		N	N		N				N	N
LIVER	N			N		N	N	N		
KIDNEYS	N			N		N	N	N		
SPLEEN	N			N		N	N	N		
BRAIN	N			N		N	N	N		
SKIN, NOS										
SKIN OF ARM										
ALOPECIA						2				
SKIN OF NECK										
ALOPECIA						2				

KEY:N-NORMAL AND TISSUE COLLECTED FOR HISTOPATHOLOGY,1-MINIMAL,2-MINOR,3-MODERATE,4-SEVERE
P-PRESENT,A-ABSENT,*-SEE COMMENT REPORT (FORM #2), X=NORMAL BUT NOT COLLECTED

INDIVIDUAL ANIMAL GROSS PATHOLOGY INCIDENCE TABLE

EXPERIMENT # 880017I2 EXPERIMENT START DATE: 25-APR-88 COMPOUND # 88-0017
SOFTWARE VERS # 3.0
ACCESSION NUMBER 907124

400.000 PPM GROUP - F

ANIMAL #	71	72	73	74	75	76	77	78	79	80
DAYS ON TEST	99	99	99	99	99	99	99	99	99	99
NASAL PASSAGES	X	X	X	X	X	X	X	X	X	X
TRACHEA	X	X	X	X	X	X	X	X	X	X
LUNGS	X	X	X	X	X	X	X	X	X	X
AORTA	X	X	X	X	X	X	X	X	X	X
ESOPHAGUS	X	X	X	X	X	X	X	X	X	X
STOMACH	X	X	X	X	X	X	X	X	X	X
DUODENUM	X	X	X	X	X	X	X	X	X	X
JEJUNUM	X	X	X	X	X	X	X	X	X	X
ILEUM	X	X	X	X	X	X	X	X	X	X
CECUM	X	X	X	X	X	X	X	X	X	X
COLON	X	X	X	X	X	X	X	X	X	X
RECTUM	X	X	X	X	X	X	X	X	X	X
URINARY BLADDER	X	X	X	X	X	X	X	X	X	X
PITUITARY GLAND	X	X	X	X	X	X	X	X	X	X
PANCREAS, NOS	X	X	X	X	X	X	X	X	X	X
THYROID GLANDS	X	X	X	X	X	X	X	X	X	X
PARATHYROID GLANDS	X	X	X	X	X	X	X	X	X	X
MESENTERIC LYMPH NODES	X	X	X	X	X	X	X	X	X	X
BONE MARROW	X	X	X	X	X	X	X	X	X	X
SCIATIC NERVE	N	N	N	N	N	N	N	N	N	N
RIB	X	X	X	X	X	X	X	X	X	X
SALIVARY GLANDS	X	X	X	X	X	X	X	X	X	X
LUMBAR SPINAL CORD	N	N	N	N	N	N	N	N	N	N
CERVICAL SPINAL CORD	N	N	N	N	N	N	N	N	N	N
SPINAL ROOTS, CERV. VENT.	N	N	N	N	N	N	N	N	N	N
SPINAL ROOTS, CERV. DORSAL	N	N	N	N	N	N	N	N	N	N
SPINAL ROOTS, LUMB. VENT.	N	N	N	N	N	N	N	N	N	N
SPINAL ROOTS, LUMB. DORSAL	N	N	N	N	N	N	N	N	N	N
DORSAL ROOT GANGLIA, CERVICAL	N	N	N	N	N	N	N	N	N	N
DORSAL ROOT GANGLIA, LUMBAR	N	N	N	N	N	N	N	N	N	N
TIBIAL NERVE	N	N	N	N	N	N	N	N	N	N
THYMUS	X	X	X	X	X	X	X	X	X	X
ADRENALS	X	X	X	X	X	X	X	X	X	X
HEART	X	X	X	X	X	X	X	X	X	X
FALLOPIAN TUBES	X	X	X	X	X	X	X	X	X	X
VAGINA	X	X	X	X	X	X	X	X	X	X
UTERUS	X	X	X	X	X	X	X	X	X	X

KEY:N-NORMAL AND TISSUE COLLECTED FOR HISTOPATHOLOGY,1-MINIMAL,2-MINOR,3-MODERATE,4-SEVERE
P-PRESENT,A-ABSENT,*-SEE COMMENT REPORT (FORM #2), X=NORMAL BUT NOT COLLECTED

INDIVIDUAL ANIMAL GROSS PATHOLOGY INCIDENCE TABLE

EXPERIMENT # 88001712 EXPERIMENT START DATE: 25-APR-88 COMPOUND # 88-0017
SOFTWARE VERS # 3.0
ACCESSION NUMBER 907124

400.000 PPM GROUP - F

ANIMAL #	71	72	73	74	75	76	77	78	79	80
DAYS ON TEST	99	99	99	99	99	99	99	99	99	99
OVARIES	X	X	X	X	X	X	X	X	X	X
LIVER, PERFUSED	N			N			N	N		N
KIDNEYS, PERFUSED	N			N			N	N		N
SPLEEN, PERFUSED	N			N			N	N		N
BRAIN, PERFUSED	N			N			N	N		N
LIVER		N	N		N	N			N	
KIDNEYS		N	N		N	N			N	
SPLEEN		N	N		N	N			N	
BRAIN		N	N		N	N			N	

KEY:N-NORMAL AND TISSUE COLLECTED FOR HISTOPATHOLOGY,1-MINIMAL,2-MINOR,3-MODERATE,4-SEVERE
P-PRESENT,A-ABSENT,*-SEE COMMENT REPORT (FORM #2), X=NORMAL BUT NOT COLLECTED

SUMMARY HISTOPATHOLOGY INCIDENCE TABLE

EXPERIMENT # 880017I1 EXPERIMENT START DATE: 18-APR-88 COMPOUND # 88-0017
SOFTWARE VERS # 3.0
ACCESSION NUMBER 907124

GROUP	0.000 PPM M	100.000 PPM M	200.000 PPM M	400.000 PPM M
LIVER	5	5	5	5
INFLAMMATION, CHRONIC FOCAL	4	5	5	4
HEPATOCYTE				
CYTOPLASMIC VACUOLIZATION	1	0	0	1
KUPFFER CELL				
HEMOSIDEROSIS	0	0	3	4
KIDNEYS	5	5	5	5
HYDRONEPHROSIS, UNILATERAL	1	0	0	1
INFLAMMATION, CHRONIC FOCAL	0	0	2	0
PROXIMAL CONVOLUTED RENAL TUBULE				
DEGENERATION, HYALIN	4	5	5	3
HEMOSIDEROSIS	1	0	5	3
SPLEEN	5	5	5	5
SPLENIC RED PULP				
HEMOSIDEROSIS	5	5	5	5
BRAIN	5	0	0	5
SCIATIC NERVE	5	0	0	5
NERVE FIBER				
DEGENERATION, WALLERIAN	1	0	0	0
CERVICAL SPINAL CORD	5	0	0	5
LUMBAR SPINAL CORD	5	0	0	5
SPINAL ROOTS, CERV. VENT.	5	0	0	5
SPINAL ROOTS, CERV. DORSAL	5	0	0	5
SPINAL ROOTS, LUMB. VENT.	5	0	0	5
SPINAL ROOTS, LUMB. DORSAL	5	0	0	5
DORSAL ROOT GANGLIA, CERVICAL	5	0	0	5
DORSAL ROOT GANGLIA, LUMBAR	5	0	0	5
TIBIAL NERVE	5	0	0	5

NUMBERS REPRESENT NUMBER OF TISSUES EXAMINED, OR IN THE CASE OF ABNORMAL FINDINGS, THE NUMBER OF TISSUES WITH EACH ABNORMALITY.

INDIVIDUAL ANIMAL HISTOPATHOLOGY INCIDENCE TABLE

EXPERIMENT # 88001711 EXPERIMENT START DATE: 18-APR-88 COMPOUND # 88-0017
SOFTWARE VERS # 3.0
ACCESSION NUMBER 907124

0.000 PPM GROUP - M

ANIMAL #	1	2	3	4	5	6	7	8	9	10
DAYS ON TEST	99	99	99	99	99	99	99	99	99	99
LIVER										N
INFLAMMATION, CHRONIC FOCAL				1		1		1	1	
HEPATOCYTE										
CYTOPLASMIC VACUOLIZATION						1				
KIDNEYS										
HYDRONEPHROSIS, UNILATERAL				2						
PROXIMAL CONVOLUTED RENAL TUBULE										
DEGENERATION, HYALIN				1				1	1	1
HEMOSIDEROSIS						1				
SPLEEN										
SPLENIC RED PULP										
HEMOSIDEROSIS				1		1		1	1	1
BRAIN				N		N		N	N	N
SCIATIC NERVE						N		N	N	N
NERVE FIBER										
DEGENERATION, WALLERIAN				1						
CERVICAL SPINAL CORD				N		N		N	N	N
LUMBAR SPINAL CORD				N		N		N	N	N
SPINAL ROOTS, CERV. VENT.				N		N		N	N	N
SPINAL ROOTS, CERV. DORSAL				N		N		N	N	N
SPINAL ROOTS, LUMB. VENT.				N		N		N	N	N
SPINAL ROOTS, LUMB. DORSAL				N		N		N	N	N
DORSAL ROOT GANGLIA, CERVICAL				N		N		N	N	N
DORSAL ROOT GANGLIA, LUMBAR				N		N		N	N	N
TIBIAL NERVE				N		N		N	N	N

KEY:P-PRESENT,A-ABSENT,N-NORMAL ,1-MINIMAL,2-MINOR,3-MODERATE,4-SEVERE
* - SEE COMMENT REPORT (FORM #3)

INDIVIDUAL ANIMAL HISTOPATHOLOGY INCIDENCE TABLE

EXPERIMENT # 88001711 EXPERIMENT START DATE: 18-APR-88 COMPOUND # 88-0017
SOFTWARE VERS # 3.0
ACCESSION NUMBER 907124

100.000 PPM GROUP - M

ANIMAL #	11	12	13	14	15	16	17	18	19	20
DAYS ON TEST	99	99	99	99	99	99	99	99	99	99
LIVER										
INFLAMMATION, CHRONIC FOCAL		1		1	1	1			1	
KIDNEYS										
PROXIMAL CONVOLUTED RENAL TUBULE										
DEGENERATION, HYALIN		1		1	1	1			1	
SPLEEN										
SPLENIC RED PULP										
HEMOSIDEROSIS		1		1	1	1			1	
BRAIN										
SCIATIC NERVE										
CERVICAL SPINAL CORD										
LUMBAR SPINAL CORD										
SPINAL ROOTS, CERV. VENT.										
SPINAL ROOTS, CERV. DORSAL										
SPINAL ROOTS, LUMB. VENT.										
SPINAL ROOTS, LUMB. DORSAL										
DORSAL ROOT GANGLIA, CERVICAL										
DORSAL ROOT GANGLIA, LUMBAR										
TIBIAL NERVE										

KEY:P-PRESENT,A-ABSENT,N-NORMAL ,1-MINIMAL,2-MINOR,3-MODERATE,4-SEVERE
* - SEE COMMENT REPORT (FORM #3)

INDIVIDUAL ANIMAL HISTOPATHOLOGY INCIDENCE TABLE

EXPERIMENT # 8800171I EXPERIMENT START DATE: 18-APR-88 COMPOUND # 88-0017
SOFTWARE VERS # 3.0
ACCESSION NUMBER 907124

200.000 PPM GROUP - M

ANIMAL #	21	22	23	24	25	26	27	28	29	30
DAYS ON TEST	99	99	99	99	99	99	99	99	99	99
LIVER										
INFLAMMATION, CHRONIC FOCAL		1		1	1	1		1		
KUPFFER CELL										
HEMOSIDEROSIS		1				1		1		
KIDNEYS										
INFLAMMATION, CHRONIC FOCAL		1		1						
PROXIMAL CONVOLUTED RENAL TUBULE										
DEGENERATION, HYALIN		1		1	1	1		1		
HEMOSIDEROSIS		1		1	1	1		1		
SPLEEN										
SPLENIC RED PULP										
HEMOSIDEROSIS		2		2	2	2		2		
BRAIN										
SCIATIC NERVE										
CERVICAL SPINAL CORD										
LUMBAR SPINAL CORD										
SPINAL ROOTS, CERV. VENT.										
SPINAL ROOTS, CERV. DORSAL										
SPINAL ROOTS, LUMB. VENT.										
SPINAL ROOTS, LUMB. DORSAL										
DORSAL ROOT GANGLIA, CERVICAL										
DORSAL ROOT GANGLIA, LUMBAR										
TIBIAL NERVE										

KEY:P-PRESENT,A-ABSENT,N-NORMAL ,1-MINIMAL,2-MINOR,3-MODERATE,4-SEVERE
* - SEE COMMENT REPORT (FORM #3)

INDIVIDUAL ANIMAL HISTOPATHOLOGY INCIDENCE TABLE

EXPERIMENT # 880017I1 EXPERIMENT START DATE: 18-APR-88 COMPOUND # 88-0017
SOFTWARE VERS # 3.0
ACCESSION NUMBER 907124

400.000 PPM GROUP - M

ANIMAL #	31	32	33	34	35	36	37	38	39	40
DAYS ON TEST	99	99	99	99	99	99	99	99	99	99
LIVER										
INFLAMMATION, CHRONIC FOCAL			1			1	1	1		
HEPATOCYTE										
CYTOPLASMIC VACUOLIZATION				1						
KUPFFER CELL										
HEMOSIDEROSIS				1		1	1	2		
KIDNEYS										
HYDRONEPHROSIS, UNILATERAL								2		
PROXIMAL CONVOLUTED RENAL TUBULE										
DEGENERATION, HYALIN			1	1			1			
HEMOSIDEROSIS				1		1		2		
SPLEEN										
SPLENIC RED PULP										
HEMOSIDEROSIS			3	3		3	2	3		
BRAIN			N	N		N	N	N		
SCIATIC NERVE			N	N		N	N	N		
CERVICAL SPINAL CORD			N	N		N	N	N		
LUMBAR SPINAL CORD			N	N		N	N	N		
SPINAL ROOTS, CERV. VENT.			N	N		N	N	N		
SPINAL ROOTS, CERV. DORSAL			N	N		N	N	N		
SPINAL ROOTS, LUMB. VENT.			N	N		N	N	N		
SPINAL ROOTS, LUMB. DORSAL			N	N		N	N	N		
DORSAL ROOT GANGLIA, CERVICAL			N	N		N	N	N		
DORSAL ROOT GANGLIA, LUMBAR			N	N		N	N	N		
TIBIAL NERVE			N	N		N	N	N		

KEY:P-PRESENT,A-ABSENT,N-NORMAL ,1-MINIMAL,2-MINOR,3-MODERATE,4-SEVERE
* - SEE COMMENT REPORT (FORM #3)

SUMMARY HISTOPATHOLOGY INCIDENCE TABLE

EXPERIMENT # 88001712 EXPERIMENT START DATE: 25-APR-88 COMPOUND # 88-0017
SOFTWARE VERS # 3.0
ACCESSION NUMBER 907124

GROUP	0.000 PPM F	100.000 PPM F	200.000 PPM F	400.000 PPM F
LIVER	5	4	5	5
INFLAMMATION, CHRONIC FOCAL	1	3	5	1
HEPATOCYTE				
CYTOPLASMIC VACUOLIZATION	1	1	0	0
KUPFFER CELL				
HEMOSIDEROSIS	0	0	5	5
KIDNEYS	5	5	5	5
HYDRONEPHROSIS, UNILATERAL	1	0	0	1
INFLAMMATION, CHRONIC FOCAL	0	0	0	1
PYELONEPHRITIS, ACUTE AND CHRONIC	0	0	0	1
PROXIMAL CONVOLUTED RENAL TUBULE				
HEMOSIDEROSIS	0	0	5	5
SPLEEN	5	5	5	5
SPLENIC RED PULP				
HEMOSIDEROSIS	5	5	5	5
BRAIN	5	0	0	5
CERVICAL SPINAL CORD	5	0	0	5
LUMBAR SPINAL CORD	5	0	0	5
SPINAL ROOTS, CERV. VENT.	5	0	0	5
SPINAL ROOTS, CERV. DORSAL	5	0	0	5
SPINAL ROOTS, LUMB. VENT.	5	0	0	5
SPINAL ROOTS, LUMB. DORSAL	5	0	0	5
DORSAL ROOT GANGLIA, CERVICAL	5	0	0	5
DORSAL ROOT GANGLIA, LUMBAR	5	0	0	5
SCIATIC NERVE	5	0	0	5
TIBIAL NERVE	5	0	0	5

NUMBERS REPRESENT NUMBER OF TISSUES EXAMINED, OR IN THE CASE OF ABNORMAL FINDINGS, THE NUMBER OF TISSUES WITH EACH ABNORMALITY.

INDIVIDUAL ANIMAL HISTOPATHOLOGY INCIDENCE TABLE

EXPERIMENT # 88001712 EXPERIMENT START DATE: 25-APR-88 COMPOUND # 88-0017
SOFTWARE VERS # 3.0
ACCESSION NUMBER 907124

0.000 PPM GROUP - F

ANIMAL #	41	42	43	44	45	46	47	48	49	50
DAYS ON TEST	99	99	99	99	99	99	99	99	99	99
LIVER		N			N					N
INFLAMMATION, CHRONIC FOCAL				1						
HEPATOCYTE CYTOPLASMIC VACUOLIZATION									1	
KIDNEYS		N		N	N					N
HYDRONEPHROSIS, UNILATERAL									1	
SPLEEN										
SPLENIC RED PULP HEMOSIDEROSIS		1		2	2				2	2
BRAIN		N		N	N				N	N
CERVICAL SPINAL CORD		N		N	N				N	N
LUMBAR SPINAL CORD		N		N	N				N	N
SPINAL ROOTS, CERV. VENT.		N		N	N				N	N
SPINAL ROOTS, CERV. DORSAL		N		N	N				N	N
SPINAL ROOTS, LUMB. VENT.		N		N	N				N	N
SPINAL ROOTS, LUMB. DORSAL		N		N	N				N	N
DORSAL ROOT GANGLIA, CERVICAL		N		N	N				N	N
DORSAL ROOT GANGLIA, LUMBAR		N		N	N				N	N
SCIATIC NERVE		N		N	N				N	N
TIBIAL NERVE		N		N	N				N	N

KEY:P-PRESENT,A-ABSENT,N-NORMAL ,1-MINIMAL,2-MINOR,3-MODERATE,4-SEVERE
* - SEE COMMENT REPORT (FORM #3)

INDIVIDUAL ANIMAL HISTOPATHOLOGY INCIDENCE TABLE

EXPERIMENT # 88001712 EXPERIMENT START DATE: 25-APR-88 COMPOUND # 88-0017
SOFTWARE VERS # 3.0
ACCESSION NUMBER 907124

100.000 PPM GROUP - F

ANIMAL #	51	52	53	54	55	56	57	58	59	60
DAYS ON TEST	99	99	99	99	99	99	99	99	99	99
*LIVER										
INFLAMMATION, CHRONIC FOCAL		1				1				1
HEPATOCYTE										
CYTOPLASMIC VACUOLIZATION								2		
KIDNEYS		N				N	N	N		N
SPLEEN										
SPLENIC RED PULP										
HEMOSIDEROSIS		2				2	2	2		1
BRAIN										
CERVICAL SPINAL CORD										
LUMBAR SPINAL CORD										
SPINAL ROOTS, CERV. VENT.										
SPINAL ROOTS, CERV. DORSAL										
SPINAL ROOTS, LUMB. VENT.										
SPINAL ROOTS, LUMB. DORSAL										
DORSAL ROOT GANGLIA, CERVICAL										
DORSAL ROOT GANGLIA, LUMBAR										
SCIATIC NERVE										
TIBIAL NERVE										

KEY:P-PRESENT,A-ABSENT,N-NORMAL ,1-MINIMAL,2-MINOR,3-MODERATE,4-SEVERE
* - SEE COMMENT REPORT (FORM #3)

INDIVIDUAL ANIMAL HISTOPATHOLOGY INCIDENCE TABLE

EXPERIMENT # 88001712 EXPERIMENT START DATE: 25-APR-88 COMPOUND # 88-0017
SOFTWARE VERS # 3.0
ACCESSION NUMBER 907124

200.000 PPM GROUP - F

ANIMAL #	61	62	63	64	65	66	67	68	69	70
DAYS ON TEST	99	99	99	99	99	99	99	99	99	99
LIVER										
INFLAMMATION, CHRONIC FOCAL		1	1		1				1	1
KUPFFER CELL										
HEMOSIDEROSIS		1	1		2				1	2
KIDNEYS										
PROXIMAL CONVOLUTED RENAL TUBULE										
HEMOSIDEROSIS		1	1		1				1	1
SPLEEN										
SPLENIC RED PULP										
HEMOSIDEROSIS		3	3		3				2	3
BRAIN										
CERVICAL SPINAL CORD										
LUMBAR SPINAL CORD										
SPINAL ROOTS, CERV. VENT.										
SPINAL ROOTS, CERV. DORSAL										
SPINAL ROOTS, LUMB. VENT.										
SPINAL ROOTS, LUMB. DORSAL										
DORSAL ROOT GANGLIA, CERVICAL										
DORSAL ROOT GANGLIA, LUMBAR										
SCIATIC NERVE										
TIBIAL NERVE										

KEY:P-PRESENT,A-ABSENT,N-NORMAL ,1-MINIMAL,2-MINOR,3-MODERATE,4-SEVERE
* - SEE COMMENT REPORT (FORM #3)

INDIVIDUAL ANIMAL HISTOPATHOLOGY INCIDENCE TABLE

EXPERIMENT # 88001712 EXPERIMENT START DATE: 25-APR-88 COMPOUND # 88-0017
SOFTWARE VERS # 3.0
ACCESSION NUMBER 907124

400.000 PPM GROUP - F

ANIMAL #	71	72	73	74	75	76	77	78	79	80
DAYS ON TEST	99	99	99	99	99	99	99	99	99	99
LIVER										
INFLAMMATION, CHRONIC FOCAL							1			
KUPFFER CELL										
HEMOSIDEROSIS	2			2			2	2		2
KIDNEYS										
INFLAMMATION, CHRONIC FOCAL				2						
PYELONEPHRITIS, ACUTE AND CHRONIC				2						
HYDRONEPHROSIS, UNILATERAL				2						
PROXIMAL CONVOLUTED RENAL TUBULE										
HEMOSIDEROSIS	2			2			2	2		2
SPLEEN										
SPLENIC RED PULP										
HEMOSIDEROSIS	3			3			3	3		3
BRAIN	N			N			N	N		N
CERVICAL SPINAL CORD	N			N			N	N		N
LUMBAR SPINAL CORD	N			N			N	N		N
SPINAL ROOTS, CERV. VENT.	N			N			N	N		N
SPINAL ROOTS, CERV. DORSAL	N			N			N	N		N
SPINAL ROOTS, LUMB. VENT.	N			N			N	N		N
SPINAL ROOTS, LUMB. DORSAL	N			N			N	N		N
DORSAL ROOT GANGLIA, CERVICAL	N			N			N	N		N
DORSAL ROOT GANGLIA, LUMBAR	N			N			N	N		N
SCIATIC NERVE	N			N			N	N		N
TIBIAL NERVE	N			N			N	N		N

KEY:P-PRESENT,A-ABSENT,N-NORMAL ,1-MINIMAL,2-MINOR;3-MODERATE,4-SEVERE
* - SEE COMMENT REPORT (FORM #3)

HISTOPATHOLOGY COMMENT REPORT

EXPERIMENT # 88001712 EXPERIMENT START DATE: 25-APR-88 COMPOUND # 88-0017
SOFTWARE VERS # 3.0
ACCESSION NUMBER 907124

DAY	DOSE LEVEL	ANIMAL #	COMMENT
280	100.000 PPM	58	LIVER-GLYCOGEN VACUOLES IN HEPATOCYTES.

CHEMICALS QUALITY SERVICES DIVISION REPORT FOR: TOXICOLOGY

CQSD FILE #: EE8H014

DATE RECEIVED: 04/07/88

STUDY DIRECTORS: E. Renner, E. Barber,
G. Katz and D. Morgott

DATE ANALYZED: 04/07/88
04/18/88

REQUEST #: 131140

DATE REPORTED: 04/20/88

TITLE: Purity and Structure Confirmation

AUTHOR: N. Porter

SAMPLE IDENTIFICATION: Ethylene Glycol Monopropyl Ether, HAEL # 88-0017, ACC # 907124

FOR MORE INFORMATION OR FURTHER WORK PLEASE CONTACT: Karen Burgess @ 25925

REPORT:

The test chemcial was received and analyzed for purity using GC/FID, and analyzed by GC/MS by electron impact ionization for structure confirmation. The results are as follows:

Purity (area percent)

Mean = 99.9
n = 3
SD = 0

The mass spectrum of the test chemical is consistent with the structure of ethylene glycol monopropyl ether based on comparasin with reference library spectrum.

SIGNED: N. Porter
K. Burgess

CHEMICALS QUALITY SERVICES DIVISION REPORT FOR: TOXICOLOGY

CQSD FILE #: EE8H014

DATE RECEIVED: 08/04/88
08/08/88

STUDY DIRECTORS: E. Renner, W. Krasavage
G. Katz

DATE ANALYZED: 08/09/88

REQUEST #: 131144 and 126659

DATE REPORTED: 08/11/88

TITLE: Purity and Structure Confirmation

AUTHOR: N. Porter

SAMPLE IDENTIFICATION: Ethylene Glycol Monopropyl Ether, HAEL # 88-0017, ACC # 907124, Lot T62-15(1/19/88) and Lot T62-15(7/21/88)

FOR MORE INFORMATION OR FURTHER WORK PLEASE CONTACT: K. Robillard, N. Porter

REPORT:

Two samples of the test chemcial were received and analyzed for purity using GC/FID, and analyzed by GC/MS by electron ionization for structure confirmation.

The results are as follows:

Purity (area percent)

Lot 1/19/88	Mean = 99.8 n = 3 SD = 0	Lot 7/21/88	Mean = 99.9 n = 3 SD = 0

The mass spectra of the two samples are identical to one another and consistent with the structure of ethylene glycol monopropyl ether, based on comparison with reference library spectrum.

SIGNED: Nancy Porter
K A Robillard
8-26-88

152987R TX-83-14

"Contains NO CBI"

2-Propoxyethanol: Inhalation Teratology Probe in Rats

Walter J. Krasavage, M.S.
and
Gary V. Katz, Ph.D.

Toxicology Section

February 15, 1983

2-Propoxyethanol: Inhalation Teratology Probe in Rats

Introduction

Several glycol ethers and their acetates have been shown to produce reproductive effects in experimental animals. 2-Methoxyethanol produces testicular atrophy, fetotoxicity and teratogenic effects in rats, mice and rabbits.[1-6] 2-Ethoxyethanol has been reported to produce teratogenic effects in rats and rabbits and testicular changes in rats and mice.[1,5,7] 2-Methoxyethyl acetate and 2-ethoxyethyl acetate produce testicular atrophy in mice,[5] while 2-ethoxyethyl acetate has also been reported to be teratogenic in rats.[6] 2-Propoxyethanol given orally in repeated doses of 1/2, 1/4, or 1/8 the acute oral LD_{50} (LD_{50} = 3089 mg/kg) over a six-week period did not produce testicular effects in male rats, while its ester, 2-propoxyethyl acetate (LD_{50} = 9450 mg/kg), given under the same conditions produced 80% mortality and testicular atrophy at 4400 mg/kg and testicular changes in 2 of 10 rats at 2200 mg/kg.[1,8] 2-Propoxyethyl acetate has been tested for developmental toxicity[9], however 2-propoxyethanol has not been studied. The objective of this study was to assess the maternal toxicity and the embryo/fetotoxicity of 2-propoxyethanol in pregnant rats in order to select appropriate exposure levels for a teratology study.

Materials and Methods

Test Compound:

2-Propoxyethanol was obtained from Tennessee Eastman Company, Kingsport, TN.

Structural Formula:	$C_3H_7OCH_2CH_2OH$
Molecular Weight:	104.1
Boiling Point:	149.5 °C
Melting Point:	-90 °C
Specific Gravity:	0.91
Vapor Pressure:	1.3 mmHg @ 25 °C
Flash Point:	120 °F

The batch received was identified by the Order Number 12238600 and the purity was analyzed by Eastman Kodak Research Laboratories using gas chromatography and mass spectroscopy. The purity of two samples averaged 99.7 and 99.3%. The main impurity was n-butoxyethanol (0.13%). Other impurities were triethylene glycol n-butyl ether (0.04%) and isopropoxyethanol (0.02%). The material used for the probe study was identified by the Eastman Kodak Accession Number 907124 and the Health, Safety, and Human Factors Laboratory Number 82-0234.

Test Animals and Experimental Design:

Forty bred female rats (COBS®CD®(SD)BR) obtained from the Charles River Breeding Laboratories, Wilmington, MA. were randomly assigned to three exposure groups and a control group of 10 animals each. Exposure was by inhalation to vapor concentrations of 0, 400, 800 or 1600 ppm of 2-propoxyethanol for six hours per day on days 6 through 15 of gestation. Animals were exposed and housed singly in suspended wire cages. Purina® Rodent Laboratory Chow 5001 (ground) and drinking water by an automatic watering system were available ad libitum during non-exposure periods only. Room temperature and humidity were controlled at 72° ± 2°F and 50 ± 15%, respectively, and a photocycle of 12 hours light and dark was maintained. All animals were identified by numbered metal ear tags. Animals were observed for clinical signs of toxicity twice daily (except weekends) on non-exposure days; and pre-exposure and post-exposure on days 6 through 15 of gestation. Rats visible through the chamber windows were observed for signs of toxicity during exposure. Individual body weights and feed consumption were recorded on days 1, 6, 9, 12, and 15 of gestation. On day 16 of gestation all animals were anesthetized by CO_2 inhalation and bled from the inferior vena cava for hematologic determinations of total and relative white blood cell, total red blood cell, reticulocyte, Heinz body, and platelet counts, hematocrit, and hemoglobin concentration. Red cell indices were calculated and red cell morphology was described. All animals were fasted 10-12 hours

before bleeding. After exsanguination, autopsies were performed and the thoracic and abdominal viscera of the dams were examined in situ for gross pathologic changes. Maternal body weight, and liver, kidney, spleen and thymus weights were recorded. The uteri were examined for implantation sites and the number of normal and resorbed fetuses were recorded. The normal fetuses were weighed and the corpora lutea from the pregnant females were counted. Sections of liver, kidney, spleen, thymus, mesenteric lymph nodes and femur (for bone marrow) were collected in neutral buffered 10% formalin for histologic examination.

Exposure Conditions:

Exposures were conducted in stainless steel and glass inhalation chambers (4.2 m^3). 2-Propoxyethanol vapors were produced by passing dried oil-free air over the surface of the liquid contained in a 3-neck round bottom flask. Temperature in the flask was slightly elevated (up to 40°C) to aid vaporization. The atmospheres within the chambers were sampled at least once each hour for concentration, temperature and relative humidity. Concentrations were quantitatively analyzed using an infrared analyzer which had been automated for sampling and analyses. Airborne particulate counts were measured twice daily in each chamber using a Royco® 5-channel particle analyzer. The animals were rotated daily in a non-random sequential pattern within the chamber to minimize potential positional effects.

Statistical Analyses:

Body weight, feed consumption, hematologic values, absolute and relative organ weights, number of corpora lutea, implantations and viable fetuses per dam, and mean fetal body weights were analyzed using Bartlett's test for homogeneity of variance, one-way analysis of variance, and Duncan's multiple range test when the "F" values were significant. Resorptions per dam and pre and post-implantation losses were analyzed by analysis of variance after Freeman Tukey transformations. The level of significance was $p \leq 0.05$.

Results

Exposure Conditions:

Two exposures of 1600 ppm killed 8 of 10 dams; the two survivors were euthanized because of morbidity. This concentration approached the theoretical saturated vapor level of the atmosphere (1760 ppm @ 23°C).

Exposure conditions for the 400 and 800 ppm chambers are presented in Table 1. The overall mean analyzed chamber concentrations were within one and two percent of the target concentrations for the 400 and 800 ppm chambers, respectively. Overall mean daily relative humidity and temperature in the chambers were within 12% and 5% of

the target values, respectively. The respirable airborne particulate counts, measured twice daily in each chamber, did not exceed the levels found in the control chamber.

Maternal Observations:

Mean maternal body weight response is shown in Table 2. The mean body weight of the 800 ppm animals was significantly lower than the controls on the 9th, 12th, and 15th days of gestation. The mean body weight of the 400 ppm group did not differ from the controls at any time during the study.

Feed consumption (Table 3) was statistically lower in both treatment groups between days 6 to 9 and 12 to 15 of gestation and in the 800 ppm group between days 9 to 12 of gestation as well.

Red-discolored urine was observed on the dropping trays of animals exposed to 800 (10/10) and 400 (10/10) ppm of 2-propoxyethanol after one exposure and in 10/10 and 3/10 animals at the 800 ppm concentration after the second and third exposures, respectively. It was not seen after subsequent exposures. Pale eyes appeared after the second exposure in all animals exposed to 400 and 800 ppm of 2-propoxyethanol. This clinical sign was observed in all 800 ppm animals after each subsequent exposure, while the number of 400 ppm dams with pale eyes decreased after subsequent exposures. Two dams each in the 400 and 800 ppm groups developed corneal opacities after

two exposures and two dams exposed to 400 ppm had alopecia on the fore and hindlimbs; first seen on day 12 and 14 of gestation. The corneal opacities and alopecia were not considered to be compound related.

A concentration-dependent decrease in total red blood cell counts and packed cell volume was produced by exposure to 400 and 800 ppm of 2-propoxyethanol (Table 4). Mean corpuscular volume, mean corpuscular hemoglobin and reticulocyte counts were increased at these levels compared to the controls. Mean corpuscular hemoglobin concentration and nucleated red blood cells were increased at 800 ppm also. The total white blood cell counts of the 400 and 800 ppm groups were statistically lower than the controls. Hemoglobin concentration and platelet counts were comparable to control values.

Terminal body weights (day 16 of gestation) were reduced in the 400 and 800 ppm animals (Table 5). The absolute and relative liver weights of both the 400 and 800 ppm dams were significantly reduced. Absolute kidney weights were slightly lower than controls, but not statistically significant. Relative kidney weights were comparable to the controls. Exposure to 400 and 800 ppm of 2-propoxyethanol produced a concentration-dependent decrease in absolute and relative thymus weights and a concentration-dependent increase in the absolute and relative weights of the spleen.

Significant gross pathology at time of cesarian section included enlarged and/or dark spleens and smaller than normal thymus glands seen in the 800 ppm dams. The incidence of these findings at 400 ppm was comparable to the controls.

Histologic examinations revealed thymic atrophy in the dams exposed to 400 ppm (2/10) and 800 ppm (8/10) of 2-propoxyethanol (Table 6). The bone marrow was congested in 6/10 dams exposed to 800 ppm and hypocellularity of immature white blood cells was seen in the bone marrow of 4/10 dams at this level. Hemosiderin was found in the proximal tubular epithelium of the kidneys in 8/10 dams exposed to 800 ppm and splenic congestion was noted in 4/10 and 6/10 dams in the 400 and 800 ppm groups, respectively. Extramedullary hematopoiesis was seen in the spleens and livers of all groups including the controls, but it was found more frequently and/or in greater severity with increasing dose.

Observations at the time of cesarian sections are presented in Table 7. Pregnancy rate, number of corpora lutea, implantation sites, and viable fetuses per dam were comparable among the treated and control groups. The mean number of resorptions were increased in the 800 ppm litters, thus the percent of post-implantation loss was significantly increased at this exposure concentration. Both 400 and 800 ppm produced a significant concentration dependent reduction in mean fetal body weight.

Summary and Conclusions

Exposure to 1600 ppm of 2-propoxyethanol by inhalation for 6/hrs per day on days 6 and 7 of gestation produced maternal lethality (8/10) in rats and was discontinued. Concentrations of 400 and 800 ppm produced maternal toxicity and embryo/fetolethality and/or fetotoxicity. Mean maternal body weight and feed intake was reduced in the 800 ppm animals during exposure. Mean body weight of the 400 ppm dams was comparable to the controls during this time, while the feed intake was slightly reduced from days 6 to 9 and 12 to 15 of gestation. The body weight response seen in the 800 ppm dams was the result of a significant body weight loss in these animals during the first three days of exposure. Red blood cell counts and hematocrit were decreased and the mean corpuscular volume, mean corpuscular hemoglobin, reticulocytes, and nucleated red blood cells were increased in the 400 and 800 ppm groups. The severity of the effect was concentration-dependent. A significant decrease in total white blood cell counts was observed at both exposure levels and reflected the histologic changes seen in the bone marrow at 800 ppm. Terminal body weight and the absolute and relative weights of the thymus glands were lower in the 400 and 800 ppm animals compared to the controls, while 400 and 800 ppm increased the absolute and relative spleen weights. Increased resorptions were seen in the dams exposed to 800 ppm and fetal body weights were reduced in the litters of dams exposed to 400 and 800 ppm of 2-propoxyethanol. Compound related gross and histopathology were seen in both exposed

groups, but the incidence and/or severity were greater in the 800 ppm dams.

Based on the data presented here, concentrations of 0, 100, 200 and 400 ppm of 2-propoxyethanol appear to be appropriate exposure levels for a teratology study.

References

1. Krasavage, W.J. and Vlaovic, M.S. Comparative Toxicity of Nine Glycol Ethers: III. Six Weeks Repeated Dose Study. Toxicology Report 134780Q, TX-82-06, Unpublished Data, Health, Safety, and Human Factors Laboratory, Eastman Kodak Company, Rochester, NY, March, 1982.

2. Miller, R.R., Ayres, J.A., Calhoun, L.L., Young, J.T. and McKenna, M.J. Comparative Short-Term Inhalation Toxicity of Ethylene Glycol Monomethyl Ether and Propylene Glycol Monomethyl Ether in Rats and Mice. Tox. Appl. Pharmacol. 61, 368-377, 1981.

3. Miller, R.R., Ayres, J.A., Young, J.T. and McKenna, M.J. Ethylene Glycol Monomethyl Ether: A Subchronic Inhalation Study in Rats and Rabbits, Toxicologist, Vol. 2, No. 1. p. 11, 1982.

4. Nagano, K., Nakayama, E., Oobayashi, H., Yamada, T., Adachi, H., Nishizawa, T., Ozawa, H., Nakaichi, M., Okuda, H., Minami, K., and Yamazaki, K. Embryotoxic Effects of Ethylene Glycol Monomethyl Ether in Mice. Toxicology 20:335-343, 1981.

5. Nagano, K., Nakayama, E., Kayano, M., Oobayashi, H., Adachi, H., and Yamada, T. Testicular Atrophy of Mice Induced by Ethylene Glycol Monoalkyl Ethers. Jap. J. Ind. Health, 21:29-35, 1979 (in Japanese).

6. Nelson, B.K., Setzer, J.V., Brightwell, W.S., Mathinos, P.R., Kuczuk, M.H. and Weaver, T.W. Comparative Inhalation Teratogenicity of Four Industrial Glycol Ether Solvents in Rats. Teratology 25:64A, 1982.

7. Hardin, B.D., Bond, G.P., Sikov, M.R., Andrew, F.D., Beliles, R.P., and Niemeier, R.W. Testing of Selected Workplace Chemicals for Teratogenic Potential. Scand. J. Work Environ. Health, 7(4), 66-75, 1981.

8. Krasavage, W.J., Katz, G.V. and Topping, D.C. Basic Toxicity of 2-Propoxyethyl Acetate, Toxicology Report 152909T, TX-82-28, Unpublished Data, Health, Safety, and Human Factors Laboratory, Eastman Kodak Company, Rochester, NY, August, 1982.

9. Krasavage, W.J. and Katz, G.V. Developmental Toxicity of 2-Propoxyethyl Acetate in the Rat. Toxicology Report 152980J, TX-83-07, Unpublished Data, Health, Safety, and Human Factors Laboratory, Eastman Kodak Company, Rochester, NY, February, 1983.

Table 1

2-Propoxyethanol - Inhalation Teratology Probe in Rats

Summary of Exposure Conditions

	Target Concentration (ppm)[a]		
	0	400	800
Number of Exposures	10	10	10
Analyzed Concentration (ppm)			
Overall Mean ± SD	--	403 ± 24	784 ± 92
Extremes[b]	--	379 - 421	664 - 857
Nominal Concentration ± SD (ppm)[c]	--	545 ± 82	913 ± 105
Overall Mean Temperature ± SD (C°)	21 ± 0.6	22 ± 0.7	23 ± 0.5
Overall Mean Relative Humidity ± SD(%)	53 ± 3	44 ± 5	50 ± 3

[a] = A concentration of 1600 ppm killed 8/10 animals after two exposures, thus, it was discontinued.

[b] = of the daily means.

[c] = calculated daily from volume of chemical used and total airflow.

Table 2

2-Propoxyethanol - Inhalation Teratology Probe in Rats

Maternal Body Weight(g)

	Target Concentration (ppm)		
	0	400	800
Gestation Days:			
1	178 ± 10[a]	179 ± 10	180 ± 8
6	217 ± 10	217 ± 14	218 ± 11
9	230 ± 9	222 ± 15	207 ± 15[b]
12	244 ± 11	241 ± 17	229 ± 16
15	261 ± 12	259 ± 14	244 ± 13[b]

a = Mean ± standard deviation.

b = Statistically different from controls ($p \leq 0.05$).

Table 3

2-Propoxyethanol - Inhalation Teratology Probe in Rats

Maternal Feed Consumption (g/rat/day)

	Target Concentration (ppm)		
	0	400	800
Gestation Days:			
1-6	19.2 ± 1.6[a]	18.6 ± 1.8	18.4 ± 2.0
6-9	18.6 ± 1.0	14.2 ± 2.0[b]	9.5 ± 3.0[b]
9-12	20.4 ± 1.5	19.2 ± 2.2	16.0 ± 2.6[b]
12-15	22.9 ± 1.1	21.0 ± 1.9[b]	20.5 ± 1.8[b]
6-15	20.6 ± 2.2	18.1 ± 3.5[b]	15.3 ± 5.5[b]

[a] = Mean ± standard deviation.

[b] = Statistically different from controls ($p \leq 0.05$).

Table 4

2-Propoxyethanol - Inhalation Teratology Probe in Rats

Maternal Hematology

	Target Concentration (ppm)		
	0	400	800
White Blood Cells per mm^3 (X 10^3)[a]	15.7 ± 3.6[b]	9.9 ± 2.8[c]	10.0 ± 2.2[c]
Red Blood Cells per mm^3 (X 10^6)	6.3 ± 0.2	5.3 ± 0.3[c]	4.7 ± 0.2[c]
Hemoglobin Concentration (g/dL)	12.8 ± 0.3	12.5 ± 0.5	12.2 ± 0.8
Hematocrit (%)	37.9 ± 0.8	36.5 ± 1.8[c]	34.1 ± 1.9[c]
Platelets per mm^3 (X 10^3)	1056 ± 199	1065 ± 161	1148 ± 149
Mean Corpuscular Volume (μ^3)	60.0 ± 1.6	68.4 ± 2.1[c]	72.3 ± 2.7[c]
Mean Corpuscular Hemoglobin ($\mu\mu g$)	20.3 ± 0.4	23.4 ± 0.8[c]	25.9 ± 1.3[c]
Mean Corpuscular Hemoglobin Conc. (%)	33.8 ± 0.5	34.2 ± 0.4	35.8 ± 0.9[c]
Reticulocyte Count (per 1000 RBC)[d]	46.4 ± 14.3	136.9 ± 46.4[c]	217.7 ± 67.6[c]
Nucleated Red Blood Cells (per 100 WBC)	0.2 ± 0.4	0.4 ± 0.7	2.7 ± 6.2

[a] = Differential white cell counts were normal for all exposure concentrations.
[b] = Mean ± 1 standard deviation.
[c] = Statistically different than controls ($p \leq 0.05$).
[d] = No Heinz bodies were seen in any group.

Table 5

2-Propoxyethanol - Inhalation Teratology Probe in Rats

Maternal Body Weight and Organ Weights at Termination

	Target Concentration (ppm)		
	0	400	800
Body Weight (g)	247 ± 13[a]	213 ± 13[b]	200 ± 11[b]
Liver: Weight (g)	11.93 ± 1.33	8.80 ± 0.70[b]	8.74 ± 0.62[b]
% Body Weight	4.83 ± 0.33	4.14 ± 0.17[b]	4.38 ± 0.22[b]
Kidney: Weight (g)	1.93 ± 0.17	1.77 ± 0.16	1.79 ± 0.10
% Body Weight	0.78 ± 0.05	0.83 ± 0.05	0.90 ± 0.06
Spleen: Weight (g)	0.87 ± 0.15	1.02 ± 0.21	1.29 ± 0.37[b]
% Body Weight	0.36 ± 0.07	0.48 ± 0.09[b]	0.65 ± 0.18[b]
Thymus: Weight (g)	0.44 ± 0.10	0.31 ± 0.04[b]	0.27 ± 0.09[b]
% Body Weight	0.18 ± 0.04	0.15 ± 0.02[b]	0.13 ± 0.04[b]

[a] = Mean ± 1 standard deviation.

[b] = Statistically different from controls ($p \leq 0.05$).

Table 6

2-Propoxyethanol - Inhalation Teratology Probe in Rats

Summary of Maternal Histopathology

	Target Concentration (ppm)		
	0	400	800
Lesions:			
Thymus;			
Atrophy -	0/10[a]	2/10 (2)[b]	8/10 (2-4)
Spleen;			
Congestion -	0/10	4/10 (2)	6/10 (2)
Extramedullary Hematopoiesis -	10/10 (1)	10/10 (2-3)	10/10 (2-4)
Liver;			
Extramedullary Hematopoiesis -	4/10 (1)	8/10 (1-2)	7/10 (2-3)
Kidney;			
Hemosiderin -	0/10	0/10	8/10 (1)
Bone Marrow;			
Congestion -	0/9	0/9	6/10 (2)
Hypocellularity (white cells) -	0/9	0/9	4/10

[a] = Number of animals affected/number of animals examined.

[b] = Denotes severity of the lesion based on a scale of 1-4 from least to most severe.

Table 7

2-Propoxyethanol - Inhalation Teratology Probe in Rats

Summary of Observations at Time of Cesarian Section

	Target Concentration (ppm)[a]		
	0	400	800
No. of Females Mated	10	10	10
No. of Females Pregnant	10	10	10
Copora Lutea/Dam[b]	14.8 ± 4.2	14.8 ± 4.2	13.3 ± 2.1
Implantations/Dam[b]	10.9 ± 2.3	13.0 ± 1.3	12.2 ± 2.2
Viable Fetuses/Dam[b]	10.5 ± 2.6	12.3 ± 1.2	9.7 ± 4.4
Resorptions/Litter[b]	0.4 ± 0.5	0.7 ± 0.8	2.5 ± 4.2[f]
Litters with Resorptions	4	5	6
Litters Completely Resorbed	0	0	1
% Pre-Implantation Loss[c]	26.3	12.2	8.3
% Post-Implantation Loss[d]	3.7	5.4	20.5[f]
Mean Fetal Body Weight (g)[e]	0.48 ± .03	0.41 ± .03[f]	0.35 ± .01[f]

a = A 1600 ppm concentration killed 8/10 animals after two exposures, thus it was discontinued.

b = Mean ± 1 standard deviation.

c = % Pre-Implantation Loss = $\frac{\text{(Total Corpora Lutea - Total Implantations) X 100}}{\text{Total Corpora Lutea}}$

d = % Post-Implantation Loss = $\frac{\text{(Total Implantations - Total Viable Implantations) X 100}}{\text{Total Implantations}}$

e = Mean of Litter means ± 1 standard deviation.

f = Statistically different from controls ($p \leq 0.05$).

Walter J. Krasavage, M.S.
Toxicology Section

Gary V. Katz, Ph.D.
Toxicology Section

Approved:

C.J. Terhaar, Ph.D., Supervisor
Toxicology Section

for Robert L. Raleigh, M.D., Director
Health, Safety, and Human Factors Laboratory

"Contains NO CBI"

180278X

TX-84-02

Developmental Toxicity of Ethylene Glycol Monopropyl Ether (EGPE) in the Rat

Walter J. Krasavage, M.S. and Gary V. Katz, Ph.D.

Toxicological Sciences

Health and Environment Laboratories

Eastman Kodak Company

April 11, 1984

Abstract

Pregnant rats were exposed to vapor concentrations of 100, 200, 300 or 400 ppm of ethylene glycol monopropyl ether (EGPE) for 6 hours per day on days 6 through 15 of gestation. Maternal effects included a slight reduction in red blood cell count and increased mean corpuscular volume and mean corpuscular hemoglobin at the 200, 300 and 400 ppm concentrations. Reticulocyte counts and polychromasia of the red blood cells were increased at all exposure levels; while anisocytosis was increased at 300 and 400 ppm and macrocytosis was increased at 200, 300 and 400 ppm. Hematocrit, hemoglobin concentration, platelet and total and differential white blood cell counts were comparable to the controls. Red colored urine was seen in the females after the first and second exposures to 200, 300 and 400 ppm of EGPE, but not after subsequent exposures. Absolute and relative spleen weights were increased by 300 and 400 ppm EGPE. Histologically, the maternal spleen, liver and thymus were affected; particularly after exposure to 300 and 400 ppm. Kidneys, bone marrow and mesenteric lymph nodes were normal.

Pregnancy rate, number of corpora lutea, implantation sites and viable fetuses per dam, the number of resorptions per litter and the mean fetal body weights were not affected by any of the exposure concentrations. Gross external, internal soft tissue and skeletal examinations of the fetuses revealed that EGPE did not produce teratogenicity or significant embryo/fetotoxicity in the rat at vapor concentrations as high as 400 ppm EGPE. Variations in the ossification of certain skeletal elements and the incidence of 14th rudimentary ribs were increased by exposure to 200, 300 and 400 ppm EGPE.

Developmental Toxicity of Ethylene Glycol Monopropyl Ether (EGPE) in the Rat

Introduction

Ethylene glycol based ethers are widely used as solvents in enamels, water-base coatings, lacquers and wood stains. Other uses include dye solvents in the textile, leather and printing industries, solvents for insecticides and herbicides, jet fuel additives, automotive antistall additives and diluents for hydraulic brake fluid.[1]

Recently two glycol ethers have been reported to produce adverse reproductive and/or developmental effects by various routes of exposure in several species of experimental animals. Ethylene glycol monomethyl ether (EGME) produced testicular atrophy, embryo/fetotoxicity and teratogenicity in rats, mice and rabbits. [2-9] Ethylene glycol monoethyl ether (EGEE) produced teratogenic and embryo/fetotoxic effects in rats and rabbits and testicular changes in rats, rabbits, and mice. [2,8,10-14]

On the other hand, available data indicate that ethylene glycol monopropyl ether (EGPE) and ethylene glycol monobutyl ether (EGBE), longer chain homologs of EGME and EGEE, did not produce testicular effects in rats or mice [2,8]. Moreover, EGBE did not produce teratogenicity or embryo/fetotoxicity in rats [9] and, in another study, EGBE produced only minor

embryo/fetotoxicity at maternally toxic doses.[15]

The objective of the study reported here was to determine the potential developmental toxicity of ethylene glycol monopropyl ether, the homolog in the ethylene glycol ether series for which developmental toxicity data are not available.

Materials and Methods

Test Compound:

Ethylene glycol monopropyl ether (EGPE) was obtained from the Tennessee Eastman Company, Kingsport, TN. It was identified by the Eastman Kodak accession number 907124 and a Health and Environment Laboratories number; 82-0234.

Pertinent physical-chemical properties are:

Structural Formula:	$C_3H_7OCH_2CH_2OH$
Molecular Weight:	104.15
Boiling Point:	149.5 °C
Freezing Point:	below -90 °C
Specific Gravity:	0.91
Vapor Pressure:	1.3 mmHg @ 25 °C
Flash Point:	120 °F

The batch tested was analyzed for purity by gas chromatography and mass spectroscopy and found to be 99.5% pure. The main impurity was ethylene glycol monobutyl ether (0.13%). Other impurities identified were triethylene glycol n-butyl ether (0.04%) and ethylene glycol isopropyl ether (0.02%).

Test Animals:

Sexually mature male and female rats (COBS®CD®(SD)BR) from the Charles River Breeding Laboratories, Wilmington, MA were acclimated to the laboratory for three weeks prior to mating. Males and females were housed 1:2 over a four day period to obtain 150 inseminated females. Insemination was verified by daily vaginal smears and the day sperm was found in the vagina was designated day 0 of gestation. The inseminated females were assigned to the treatment and control groups according to body weight on day 0 of gestation using a computer-generated stratified randomization scheme.

During non-exposure periods, the females were housed singly in suspended stainless steel wire bottom cages and Purina Rodent Laboratory Chow® 5001 (ground) and tap water, delivered by an automatic watering system, were available ad libitum. Room temperature and relative humidity were controlled at 22 ± 2 °C and 50 ± 15%, respectively and a 12 hour light-dark photocycle was maintained.

Exposure Conditions:

On days 6 through 15 of gestation, the animals were housed in suspended wire mesh cages and exposed to vapors of EGPE in 420-L stainless steel and glass inhalation chambers.

Vapors of EGPE were generated by passing metered air over the surface of the liquid in a 3-neck round bottom flask. Temperature in the flask was slightly elevated (up to 37 °C) to aid vaporization. The atmospheres within the chambers were sampled at least once per hour for concentration, temperature and relative humidity. Concentrations were quantitatively analyzed using an infrared analyzer (Miran® IA) which had been automated for sampling and analysis. Nominal concentrations were calculated daily based on the ratio of test material used (volumetric) to total volume of air. Airborne particle counts were done twice daily in each chamber using a Royco® 5-channel particle analyzer. The animals were rotated daily within the chamber to minimize potential positional effects.

Experimental Design:

Groups of 30 inseminated female rats were exposed to vapor concentrations of 100, 200, 300 or 400 ppm of EGPE for six hours per day on days 6 through 15 of gestation. The exposure concentrations were selected based on data generated in a probe teratology study of EGPE.[16] A control group was exposed to filtered air under identical conditions.

Maternal body weights were recorded on days 0, 6, 9, 12, 16 and 19 of gestation and individual feed consumption was measured on days 6, 9, 12, 16 and 19 of gestation. On days of exposure, all dams were observed for mortality and overt signs of toxicity prior to and subsequent to each exposure. Animals visible through the chamber windows were observed for signs of toxicity during exposure. On non-exposure days all females were observed twice daily (am and pm) for mortality and overt signs of toxicity; except on week-ends and holidays when they were observed for mortality only.

On the 20th day of gestation, the females were anesthetized by CO_2 inhalation and the abdominal viscera were exposed by a mid-line incision through the abdominal wall. All pregnant females were bled from the inferior vena cava for hematologic determinations including total red blood cell, total and relative white blood cell, reticulocyte, nucleated red cell, platelet and Heinz body counts, hemoglobin concentration, and hematocrit. Mean corpuscular volume, mean corpuscular hemoglobin and mean corpuscular hemoglobin concentration were calculated. Red cell morphology was examined. All animals were fasted for 10-12 hours before bleeding. After exsanguination via the inferior vena cava, the dams were weighed and the uterine horns were opened. The implantation sites were counted and categorized as viable or dead fetuses, early resorptions or late resorptions. A resorption was classified as "early" when no placenta or conceptus was distinguishable, and as "late" when a

placenta containing an embryo in the process of being resorbed (partially to fully formed) was present. The viable fetuses were removed from the placenta, blotted dry on absorbent paper, sexed, examined for gross external abnormalities, and weighed individually. The ovaries were removed, identified as left or right, and the corpora lutea of pregnancy were counted. Approximately one half of the fetuses from each litter was fixed in Bouin's solution and examined for internal soft tissue anomalies using Wilson's free-hand razor blade technique.[17] The other half of the fetuses was fixed in 95% ethanol, macerated with potassium hydroxide and stained with Alizarin Red S and examined for skeletal defects.[18] The thoracic and abdominal viscera of the dams were examined in situ for gross abnormalities at the time of cesarean section. The liver, kidneys, spleen and thymus were weighed for organ/body weight comparisons and along with a femur (for bone marrow) and mesenteric lymph node, sections of these organs were collected for histologic examination.

Statistical Analyses:

Test groups were compared to the control group at a level of significance of $p \leq 0.05$. Continuous data (e.g., maternal body weight, feed consumption, hematology) were analyzed using a one way analysis of variance with significant "F" values further analyzed using Duncan's Multiple Range test. Homogeneity of variances was tested by Bartlett's test. Incidence data were compared using Chi square contingency tables (2 X 5). Each test group was compared to the control group using Fisher's Exact Test when Chi square was

significant. Both the proportion of fetuses affected and the number of litters involved were analyzed.

Results

Exposure Conditions:

The analytical and nominal chamber concentrations, chamber temperature and relative humidity are shown in Table 1. The overall mean analytical concentrations (of all individual determinations) of 101, 203, 305 and 405 ppm were all within 2% of the target concentrations. The individual daily means of each exposure level were within ± 6% of their respective target concentrations. All mean nominal concentrations were slightly higher (8-16%) than their respective analytical concentrations. These differences probably reflect a loss of the compound in the generation system. The analytical and nominal concentration data indicate that the chamber concentrations were representative of the chosen exposure levels. Overall mean chamber temperature and humidity were within prescribed limits and particle count data indicated that an aerosol was not present.

Maternal Observations:

Body Weight Response and Feed Consumption:

None of the exposure concentrations had an effect on the maternal body weight gain (Table 2). Feed consumption was slightly reduced during the

first three days of exposure (days 6-9 of gestation). This reduction of feed intake was statistically different from the controls at the 200, 300 and 400 ppm concentrations (Table 3).

Clinical Signs:

Significant clinical signs of maternal toxicity were red colored urine seen on the dropping trays of 16/30, 30/30 and 28/30 animals after the first exposure to 200, 300 and 400 ppm of EGPE respectively. It was also seen on the trays of one animal each in the 300 and 400 ppm groups after the second exposure. Red colored urine was not seen at the 200, 300 and 400 ppm levels after subsequent exposures (3-10). One female exposed to 100 ppm EGPE had red colored urine only after the 6th and 7th exposures.

One dam exposed to 100 ppm EGPE died during the 7th exposure. Daily clinical signs previous to this time were normal. The animal was autopsied and selected tissues were collected for histologic examination. Grossly, the spleen, liver and renal lymph nodes were enlarged and petechial hemorrhage was seen in the lungs. Histologic examination indicated that the animal died from diffuse malignant lymphoma, which was not considered to be compound related. Death occurred on day 12 of gestation and the uterus contained 11 implantations. Except for one embryo, which appeared dead, the other 10 were alive and appeared to be normal when examined externally.

A dam in the 300 ppm group was moribund after the 9th exposure. The animal had an unkempt hair coat, was lethargic and red colored urine was found on the dropping tray. The abdomen was wet and stained brownish. The only abnormal clinical sign seen previously was red colored urine after the first exposure. The dam was euthanized and autopsied. The spleen and adrenals were enlarged, the kidneys were congested and the urinary bladder was acutely inflamed. The bladder and the ureters were dilated. Histologic examination revealed acute suppurative nephritis, cystitis and tracheitis accompanied by adrenal cortical hemorrhage. These lesions were not considered to be compound related. The female was pregnant (gestation day 14) and the uterus contained 14 implantations. Two implants were resorbed and the others were live embryos, which, when examined under a dissecting microscope, appeared to be developing normally.

Hematology:

Exposure to 200, 300 or 400 ppm of EGPE produced a statistically significant reduction in the number of red blood cells (Table 4). Mean corpuscular volume and mean corpuscular hemoglobin were increased at these concentrations. Reticulocyte counts were increased by all exposure levels. Minimal polychromasia of the red cells was increased by all concentrations of EGPE; while 300 and 400 ppm increased the number of cells with anisocytosis and 200, 300 and 400 ppm increased macrocytosis. Differential white blood cell counts were comparable to the controls, except in the 300 ppm animals where the lymphocytes were increased and the polymorphonuclear leukocytes were decreased.

Since this effect was not seen at the other exposure concentrations, it is not considered to be compound-related. Total white blood cell, platelet, nucleated red cell and Heinz body counts, hemoglobin concentration and hematocrit were comparable to the controls.

Terminal Body Weight and Organ Weights:

Terminal body weights (day 20 of gestation) of all exposed groups were comparable to the controls. The absolute and relative spleen weights of the animals exposed to 200, 300 or 400 ppm were significantly increased compared to controls. None of the exposure concentrations affected the absolute or relative weight of the liver, kidneys or thymus.

Maternal Gross and Histopathology:

No compound related gross pathology was found in the dams at the time of cesarean sections. Histopathologic examination revealed compound related effects in the spleen, thymus and liver.

The splenic changes, which reflected the red blood cell effects and the increased absolute and relative spleen weights, included increased congestion, hemosiderosis and extramedullary hematopoiesis. These changes were seen at all exposure concentrations as well as in the controls and were minor in severity. The incidence differed statistically from the controls only at 300

and 400 ppm. Hepatic effects included minor eosinophilic cytoplasmic changes at all exposure concentrations which were statistically increased at 300 and 400 ppm EGPE. Minor to moderate medullary necrosis of the thymus was present in all EGPE groups as well as the controls with the incidence increased at 300 and 400 ppm. No compound related effects were seen in the kidneys, bone marrow or mesenteric lymph nodes.

Observations at the time of Cesarean Section:

Table 6 presents the data collected at the time of cesarean section. None of the exposure concentrations of EGPE affected the pregnancy rate, number of corpora lutea or implantation sites per dam or the number of resorptions and viable fetuses per litter. The pre- and post- implantation losses of the treated groups were comparable to the controls. The sex ratio was not affected by exposure to EGPE and the mean fetal body weights of all exposure groups were comparable to the control weights. These data were not subjected to statistical analysis because, by inspection, it was obvious that none of the exposed groups differed from the controls in any of the parameters tested.

Fetal Observations:

External and Internal Soft Tissue Examinations:

Externally, major defects were observed in 2 of 1,386 fetuses examined. One fetus from a litter of 12 exposed to 300 ppm EGPE had a severely atrophied

tail and one fetus from a litter of 12 exposed to 400 ppm EGPE had thoracogastroschisis (Table 7). The fetus with thoracogastroschisis was examined immediately upon removal from the uterus and placenta and all of the thoracic and abdominal structures appeared normal e.g. the heart was beating and the major blood vessels were properly located. Both of these defects are considered to be spontaneous events and not compound related.

Minor defects seen externally included small hematomas on the head, limbs and interscapular area. These were seen at all exposure concentrations as well as in the control group. The incidence of these hematomas was not concentration-dependent and since hematomas similar to these are seen frequently in control groups in teratology studies, the hematomas seen in this study are not considered toxicologically significant. The total external defects found in the exposed groups were not statistically different from the controls. Another external observation was two fetuses in a litter exposed to 200 ppm EGPE with a common placenta. Both of these fetuses appeared normal, externally, but one was half the size of the other and was wrapped around its littermate.

Internal soft tissue examinations of 693 fetuses revealed four fetuses with major defects (Table 8). One fetus from a litter exposed to 200 ppm EGPE had internal micrencephaly (the cerebral hemispheres were not fully developed), one fetus from a control litter had unilateral anophthalmia and one fetus from a control litter had incomplete septation of the ascending aorta and pulmonary artery forming a fistula between these two vessels. The latter fetus was much smaller than normal and also had slight hydrocephalus (i.e. dilation of the lateral ventricles of the brain).

The fourth fetus with a major defect internally was the smaller fetus described above that shared a common placenta with a littermate. Internal examination of this fetus revealed that the ribs rather than being perpendicular to the spine, were displaced cephalad and parallel to the spine. The thoracic viscera were also displaced cephalad and dorsally. When the torso was sectioned transversely (Wilson's Technique) the blood vessels cut obliquely and the ribs cut in cross section. The right fourth aortic arch was persistent and formed a ringed aorta with the left aortic arch. The esophagus and trachea were severely constricted in this area, while the trachea was greatly dilated cephalad. Innominate arteries were present on both right and left arches and 4 (2 pairs?) carotid arteries were seen in the neck region. Subclavian arteries were not seen. The pulmonary artery and the ductus arteriosus were associated with the correct aortic arch (i.e. the left). This fetus also had bilateral hydronephrosis with equivocal hydroureter. It also appeared that a pair of cervical ribs were present at about the level of the 6th or 7th cervical vertebra, but this could not be determined definitely due to the distortion of the rib cage. The abnormalities seen in this fetus are not considered to be compound related, but these defects, as well as its small size, are attributed to the stress caused by sharing the same placenta and the physical contact (compression) with its littermate.

Minor defects seen internally included slight to moderate hydrocephalus and hydronephrosis and/or hydroureter in controls as well as in the exposed groups. One control fetus had a severely distended urinary bladder. Two

fetuses in a control litter, two fetuses in a 100 ppm litter and one fetus in a 300 ppm litter had subcutaneous hemorrhage of the head. The incidence of fetuses or litters with internal soft tissue defects was not statistically different among the controls and the groups exposed to EGPE.

Skeletal Examinations

No major skeletal malformations (i.e., any skeletal defects that would have compromised the survival or health of the fetus) were seen in this study (Table 9).

Minor skeletal defects were seen in all treated groups and the control group. Neither the specific skeletal defect nor the total minor skeletal defects were statistically different between the EGPE exposed groups and the control group. One fetus from a control litter had only 12 pairs of ribs with the 12th pair partially ossified. The 9th and 10th right ribs of one fetus from a litter exposed to 300 ppm EGPE were partially ossified. Wavy and/or knobby ribs were seen at a low incidence in all test groups and the controls. The incidence seen in the EGPE exposed fetuses or litters was not statistically different from the controls. Additionally, bone spurs (small unilateral or bilateral sites of ossification) were seen adjacent to the 7th cervical vertebra in 2, 3, 5 and 1 litter(s) exposed to 0, 200, 300 and 400 ppm of EGPE, respectively. The incidence of bone spurs seen in the treated groups was not statistically different from the controls.

Other skeletal alterations consisted of variations in the pattern of ossification of some skeletal elements and the supernumerary ribs (e.g. rudimentary ribs) frequently seen in teratology studies. The variations included partial ossification of some intramembranous skull bones, partial or non-ossification of the hyoid bone, the first and second thoracic centrae, the sternebrae, and a bilobed appearance of the lower thoracic centrae (8th to 13th). The number of fetuses with at least one variation of the skull, including the hyoid bone, was statistically increased at the 300 ppm EGPE concentration only; while the incidence of litters involved was not significantly different from controls at any exposure concentration. Variations in the ossification of the vertebral column consisted primarily of partial or non-ossification of the 1st and 2nd thoracic centrae, a bilobed appearance of the 8th, 9th, 10th, 11th, 12th or 13th thoracic centrae and a few lumbar centrae and partial ossification of the sacral vertebrae. When the incidence of these variations was analyzed collectively (total vertebral variations), the number of fetuses per total fetuses examined with at least one variation was statistically increased by 200, 300 and 400 ppm EGPE compared to the controls. However, the incidence of litters affected (i.e. at least one fetus in the litter had a vertebral variation) was not statistically different between the exposed and control groups.

The number of fetuses per total fetuses examined with less than 4 ossification sites in the sternum and the incidence of litters with at least one affected fetus were comparable between test group and controls while the number of fetuses with partial ossification of the sternum were increased at the 200, 300 and 400 ppm levels; the number of litters involved were not

significantly increased. The number of fetuses with non-ossified sternebral sites and the number of litters involved were comparable to the controls. Most importantly, when overall retarded ossification of the sternum was statistically analyzed (i.e. total sternebral variations), the groups exposed to EGPE did not differ from the controls.

A concentration-dependent increase in the incidence of fetuses and litters with a 14th thoracolumbar rudimentary rib (< 1/2 the length of the 13th rib) was statistically different compared to controls in the 200, 300 and 400 ppm groups exposed to EGPE. Extra 14th thoracolumbar ribs (> 1/2 the length of the 13th rib) were found in one fetus each from 4 litters exposed to 300 ppm and in one fetus each in 5 litters exposed to 400 ppm EGPE. Extra ribs were not found in control, 100 or 200 ppm fetuses. The incidence of extra ribs in the 300 and 400 ppm fetuses and litters was not statistically increased compared to controls.

Discussion

Ethylene glycol monopropyl ether, unlike its shorter chain homologs EGME and EGEE which have been reported to be teratogenic in rats and rabbits,[5,9-11] did not produce teratogenicity or significant embryo/fetotoxicity in rats exposed to vapor concentrations as high as 400 ppm.

The variations in the pattern of ossification of certain skeletal elements and the supernumerary ribs seen in fetuses from dams exposed to 200, 300 and 400 ppm EGPE are variations commonly seen in many mammalian species and are known to occur in studies with non-teratogens and also in control groups which have been subjected to mild stress (e.g. injection with a vehicle control or sham inhalation exposure).[19] When the maternal animal is subjected to greater stress, such as treatment with a chemical in teratology studies, the incidence of these skeletal variations may be increased. In some instances the increased incidence may be dose-dependent and statistically significant compared to the controls. The interpretation and significance of these skeletal variants, particularly supernumerary ribs, has been of much concern to many investigators. Kimmel and Wilson[20] suggested that supernumerary ribs are not malformations, but that an increased incidence during teratogenicity testing, if not already associated with increased malformations, may be an indication that the embryotoxic dose range is being approached. Wilson[19] also suggested that variations in the pattern of skeletal ossification are not teratogenic effects, but may be indicative of embryotoxicity at higher doses.

In this study, significant maternal toxicity was seen at all exposure levels, particularly at 200, 300 and 400 ppm EGPE. Thus, the increase in common variants may have been due to maternal toxicity rather than a direct effect of the compound. Results from a probe study[16] of EGPE, in which pregnant rats were exposed to vapor concentrations of 400, 800 or 1600 ppm in

order to select levels for this study, showed that at higher concentrations (800 ppm), EGPE produced maternal body weight loss, reduced feed intake and decreased absolute and relative liver weights. Embryolethality (resorption) was increased at 800 ppm but not at 400 ppm. A concentration of 1600 ppm EGPE killed 8 of 10 dams after two exposures. The probe study data indicate that the increased skeletal variants may in fact suggest significant embryotoxicity (resorptions) at higher concentrations of EGPE (e.g. 800 ppm). However, these concentrations would also be highly maternally toxic and embryolethal.

Conclusion

Ethylene glycol monopropyl ether did not produce teratogenic effects or significant minor embryo/fetotoxicity when pregnant rats were exposed, during the period of major organogenesis, to vapor concentrations as high as 400 ppm.

The most significant maternal toxicity was seen in the dams exposed to 200, 300 and 400 ppm EGPE.

Common variations in the ossification of certain skeletal elements and the incidence of supernumerary ribs (rudimentary 14th) were significantly increased at maternally toxic concentrations of 200, 300 and 400 ppm and may be an indication that exposure of rats to concentrations of EGPE greater than 400 ppm may produce significant embryo/fetotoxicity. However, in this study 400 ppm was a no-observed-effect-level (NOEL) for teratogenicity and significant minor embryo/fetotoxicity.

WJK:tac

04/11/84

References

1. Brown, E.S., Hauser, C.F., Ream, B.C. and R.V. Berthold, Glycols (Ethylene and Propylene) In: Kirk-Othmer Encyclopedia of Chemical Technology, 3rd Ed., Vol. II, pp. 933-971, M. Grayson, ed., John Wiley and Sons, NY (1980).

2. Krasavage, W.J. and Vlaovic, M.S. Comparative toxicity of nine glycol ethers: III. Six weeks repeated dose study. Toxicology Report 134780Q, TX-82-06, Health, Safety, and Human Factors Laboratory, Eastman Kodak Company, Rochester, NY (March, 1982).

3. Miller, R.R., Ayres, J.A., Calhoun, L.L., Young, J.T. and McKenna, M.J. Comparative short-term inhalation toxicity of ethylene glycol monomethyl ether and propylene glycol monomethyl ether in rats and mice. Tox. Appl. Pharmacol. 61: 368-377 (1981).

4. Miller, R.R., Ayres, J.A., Young, J.T. and McKenna, M.J. Ethylene glycol monomethyl ether: Subchronic inhalation study with rats and rabbits. Fundam. Appl. Tox. 3:49-54 (1983).

5. Hanley, T.R., Yano, B.L., Nitschke, K.D. and John, J.A. Ethylene glycol monomethyl ether: Inhalation teratology study in rats and rabbits. Report to Chemical Manufacturers Association (September 20, 1982) Locater No. 37-B1.

6. Hanley, T.R., Yano, B.L., Nitschke, K.D. and John, J.A. Ethylene glycol monomethyl ether: Inhalation teratology study in mice. Report to the Chemical Manufacturers Association (November 23, 1982) Locater No. 37-D1.

7. Nagano, K., Nakayama, E., Oobayashi, H., Yamada, T., Adachi, H., Hishizawa, T., Ozawa, H., Nakaichi, M., Okuda, H., Minami, K., and Yamazaki, K. Embryotoxic effects of ethylene glycol monomethyl ether in mice. Toxicology, 20:335-343 (1981).

8. Nagano, K., Nakayama, E., Kayano, M., Oobayashi, H., Adachi, H., and Yamade, T. Testicular atrophy in mice induced by ethylene glycol monoalkyl ethers. Jap. J. Ind. Health 21:29-35 (1979) (in Japanese).

9. Nelson, B.K., Setzer, J.V., Brightwell, W.S., Mathinos, P.R., Kuczuk, M.H. and Weaver, T.W. Comparative inhalation teratogenicity of three glycol ether solvents in rats. Environmental Health Perspectives In press, 1984.

References (cont'd.)

10. Hardin, B.D., Bond, G.P., Sikov, M.R., Andrew, F.D., Beliles, R.P., and Neimeier, R.W. Testing of selected workplace chemicals for teratogenic potential. Scand. J. Work Environ. Health 7(4):66-75 (1981).

11. Hardin, B.D., Niemeier, R.W., Smith, R.J., Kuczuk, M.H., Mathinos, P.R. and Weaver, T.F. Teratogenicity of 2-ethoxyethanol by dermal application. Drug and Chemical Toxicology 5(3):277-294, (1982).

12. Tinston, D.J., Doe, J.E., Godley, M.J., Head, L.K., Killick, M., Litchfield, M.H. and Wickramaratne, G.A. Ethylene glycol monoethyl ether (EE): Teratogenicity study in rats. Report to the Chemical Manufacturers Association (April 12, 1983) Locater No. 37-C2.

13. Tinston, D.J., Doe, J.E., Thomas, M. and Wickramaratne, G.A. Ethylene glycol monoethyl ether (EE): Inhalation teratogenicity study in rabbits. Report to the Chemical Manufacturers Association (April 21, 1983) Locater No. 37-D2.

14. Barbee, S.J., Terrill, J.B., DeSousa, D.J., and C.C. Conaway. Subchronic inhalation toxicology of ethylene glycol monoethyl ether in the rat and rabbit. Environmental Health Perspectives. In Press, (1984).

15. Tyl, R.W., Millicovsky, G., Dodd, D.E., Pritts, I.M., France, K.A. and L.C. Fisher. A teratologic Evaluation of Ethylene Glycol Monobutyl Ether in Fischer 344 Rats and New Zealand White Rabbits Following Inhalation Exposure. Environmental Health Perspectives; In Press, (1984).

16. Krasavage, W.J. and Katz, G.V. 2-Propoxyethanol-Inhalation teratology probe in rats. Toxicology Report 152987R, TX-83-14, Toxicology Section, Health, Safety, and Human Factors Laboratory, Eastman Kodak Company, Rochester, NY (February 1983).

17. Wilson, J.G. Method for administering agents and detecting malformations in experimental animals. In: Teratology: Principles and Techniques. (Wilson, J.G. and Warkany, J., Eds.) University of Chicago Press, Chicago, IL, 1965 pp. 262-277.

18. Walker, D.G. and Wirtschafter, L.T. The Genesis of the Rat Skeleton. Charles C. Thomas, Springfield, IL, 1957.

References (cont'd.)

19. Wilson, J.G., Environment and Birth Defects. Chapter 9, pp. 181-188, Academic Press, Inc., NY, NY 1973.

20. Kimmel, C.A. and J.G. Wilson. Skeletal Deviations in Rats: Malformations or Variations? Teratology 8(3) pp. 309-315, 1973.

180278X

TX-84-02

Walter J. Krasavage

Walter J. Krasavage, M.S.
Toxicological Sciences

Gary V. Katz

Gary V. Katz, Ph.D.
Toxicological Sciences

C J Terhaar

C.J. Terhaar, Ph.D.
Supervisor, Toxicological Sciences

Thomas S. Ely for 1984 APR 20

Robert L. Raleigh, M.D.
Director, Health and Environment Laboratories

Ethylene Glycol Monopropyl Ether: Inhahation Teratology Study in Rats

The following key personnel were involved in the conduct of the above study

Walter J. Krasavage, M.S.	Teratologist
Gary V. Katz, Ph.D.	Inhalation Toxicology, Group Leader
John L. O'Donoghue, V.M.D., Ph.D.	Pathologist
James C. Kim, D.V.M., Sc.D.	Pathologist
Edwin V. Jeszenka, V.M.D.	Laboratory Animal Medicine
Douglas C. Topping, Ph.D.	Chronic Toxicology, Group Leader
Robert Emmons, B.S.	Clinical Chemist
Richard A. Schumacher, M.S.	Analytical Chemist
M. Susan James, A.A.S.	Quality Assurance Coordinator

This study was initiated on February 16, 1983 and the in-life phase was completed on March 31, 1983. It was conducted in Toxicological Sciences, Health and Environment Laboratories (HAEL), Eastman Kodak Company, Rochester, New York, 14650. All raw data relating to the study are retained in the archives of the HAEL. The data presented in this report accurately reflect the results obtained in the above study.

Study Director: Walter J. Krasavage Date: 4-12-84

Q.A. INSPECTION STATEMENT
(CFR 58.35(B)(7))

STUDY: 82-0234-5 STUDY DIRECTOR: KRASAVAGE,W.J.
ACCESSION NUMBER: 907124

STUDY TYPE: TERATOLOGY

M. Susan James (AUDITOR, QUALITY ASSURANCE UNIT) 4/4/84 DATE

THIS STUDY WAS INSPECTED BY 1 OR MORE PERSONS OF THE QUALITY ASSURANCE UNIT OF THE HAEL, EASTMAN KODAK COMPANY, ROCHESTER, N.Y. AND WRITTEN STATUS REPORTS WERE SUBMITTED ON THE FOLLOWING DATES:

INSPECTION DATES	PHASE(S) INSPECTED	STATUS REPORT DATES
03/08/83	PROTOCOL SUBMISSION VAGINAL SMEARS AND/OR CHECK FOR PLUGS TEST SYSTEM RANDOMIZATION TEST SYSTEM WEIGHTS FEEDER WEIGHTS	03/08/83
03/25/83	TEST ARTICLE WEIGHT TEST ARTICLE DISTRIBUTION TO TEST SYSTEM CONTROL ARTICLE DISTRIBUTION TO TEST SYSTEM CHAMBER CONCENTRATION ANALYSIS INSTRUMENT CALIBRATION INSPECTION MIRAN-ONE POINT CALIBRATION PARTICLE SIZE ANALYSIS-ROYCO	03/25/83
03/29/83	TEST SYSTEM WEIGHTS BLEEDING NECROPSY HEMATOLOGY CAESAREAN SECTIONS COUNT IMPLANTATION SITES COUNT CORPORA LUTEA	03/29/83
05/18/83	SOFT TISSUE SECTIONING OF FETUSES SOFT TISSUE EXAMINATION OF FETUSES	05/19/83
05/19/83	SOFT TISSUE SECTIONING OF FETUSES SOFT TISSUE EXAMINATION OF FETUSES SOLUTION PREPARATION SOLUTION LABELLING PROCESSING OF FETUSES FOR SKELETAL EXAMINATION	05/19/83
07/18/83	SKELETAL EXAMINATION OF FETUSES	07/18/83

STUDY:82-0234-5

Q.A. INSPECTION STATEMENT
(CFR 58.35(B)(7))

10/26/83	STATUS OF FINAL REPORT PAPER BEING WRITTEN DRAFT BEING PREPARED
03/29/84	FINAL REPORT REVIEW
03/30/84	FINAL REPORT REVIEW
04/03/84	FINAL REPORT REVIEW
04/04/84	FINAL REPORT REVIEW

04/04/84

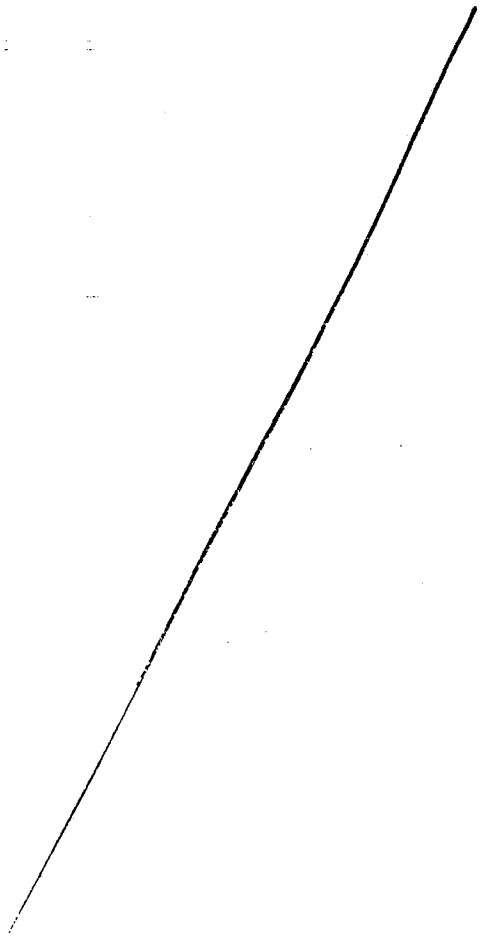

Table 1

Ethylene Glycol Monopropyl Ether-Inhalation Teratology

Summary of Exposure Conditions

Target Concentration (ppm)	0	100	200	300	400
Number of Exposures	10	10	10	10	10
Analyzed Concentration (ppm)[a]					
Overall mean ± SD	0.0	101±3	203±5	305±7	405±12
Extremes of Daily means	- -	98-106	197-206	297-315	396-425
Nominal Concentration[b] (ppm)±SD	- -	112±3	236±6	344±8	436±18
Overall Mean Temperature (°C)±SD	23±1	23±1	23±1	23±1	22±1
Overall Mean Relative Humidity (%)±SD	58±4	55±4	52±5	54±6	54±6

[a] Particle count data indicated that an aerosol was not present.

[b] Calculated daily from volume of chemical used and total airflow.

Table 2

Ethylene Glycol Monopropyl Ether-Inhalation Teratology

Maternal Body Weight (g)

Target Concentration (ppm)	0	100	200	300	400
Mortality/Pregnant Female	0/24	1/26[a]	0/25	1/27[b]	0/29
Gestation Days:					
0	194±20[c]	190±18	193±19	195±17	192±17
6	231±24	230±19	229±20	230±21	230±23
9	243±24	240±18	237±21	240±21	235±24
12	260±28	256±22	254±22	255±24	254±26
16	284±32	285±25	282±25	280±29	281±30
19	324±39	321±31	320±32	316±37	313±41
Mean Body Wt. Gain 6-16	53	55	53	49	51

[a] One dam died during the 7th exposure.*

[b] One dam was euthanized after the 9th exposure.*

[c] Mean ± 1 standard deviation.

* Data from these two dams are not included in the results.

Table 3

Ethylene Glycol Monopropyl Ether-Inhalation Teratology

Maternal Feed Consumption (g/rat/day)

Target Concentration (ppm)	0	100	200	300	400
Mortality/Pregnant Female	0/24	1/26[a]	0/25	1/27[b]	0/29
Gestation Days:					
0 - 6	21.9±2.5[c]	20.8±2.5	21.0±2.4	21.6±2.9	21.3±2.8
6 - 9	20.7±2.6	20.7±4.6	18.8±2.4[d]	18.8±2.5[d]	16.9±2.6[d]
9 - 12	22.4±3.4	21.2±2.8	20.9±2.5	21.1±2.3	21.3±2.6
12 - 16	23.7±3.0	23.2±2.4	23.6±3.0	22.9±2.7	23.1±2.6
16 - 19	27.6±4.3	27.0±3.9	27.2±3.8	27.7±4.5	27.8±3.9
0 - 19	23.3±2.7	22.6±2.7	22.7±3.5	22.4±3.3	22.1±3.9

[a] One dam died during the 7th exposure.*

[b] One dam was euthanized after the 9th exposure.*

[c] Mean ± 1 standard deviation.

[d] Statistically different from controls (ANOVA, $p \leq 0.05$)

* Data from these two dams are not included in the results.

Table 4

Ethylene Glycol Monopropyl Ether-Inhalation Teratology

Maternal Hematology[a]

Target Concentration (ppm)	0	100	200	300	400
White Blood Cells/mm^3 ($X10^3$)	8.1±3.9[b]	7.5±1.6	7.7±1.3	8.0±1.9	7.5±1.8
Red Blood Cells/mm^3 ($X10^6$)	6.0±0.3	5.8±0.4	5.6±0.4[c]	5.4±0.5[c]	5.4±0.5[c]
Hemoglobin Concentration (g/dL)	12.1±0.7	11.7±0.7	11.8±0.8	11.9±1.0	12.1±1.1
Hematocrit (%)	35.3±2.5	34.3±2.3	34.3±2.3	34.4±3.2	35.0±3.2
Mean Corpuscular Volume (μ^3)	59.1±2.9	59.5±2.4	61.3±2.4[c]	63.5±2.6[c]	65.3±2.4[c]
Mean Corpuscular Hemoglobin (μμG)	20.4±0.8	20.3±0.8	21.1±0.8[c]	21.9±1.0[c]	22.7±0.9[c]
Mean Corpuscular Hemoglobin Concentration (%)	34.4±1.1	34.2±1.1	34.4±0.8	34.6±1.2	34.7±0.9
Reticulocytes/1000 RBC	35.6±10.8	46.2±17.7[c]	56.6±17.4[c]	58.1±15.7[c]	64.0±18.8[c]
Platelets/mm^3 ($X10^3$)	1056±112	1111±111	1139±118	1140±145	1158±179

[a] No nucleated red blood cells or Heinz Bodies were seen.

[b] Mean ±1 Standard deviation

[c] Statistically significant compared to controls (ANOVA, $p \leq 0.05$)

Table 5

Ethylene Glycol Monopropyl Ether-Inhalation Teratology

Mean Terminal Body and Organ Weights

Target Conc. (ppm)	Terminal Body Weight (g)	Liver		Kidney		Thymus		Spleen	
		Wt.(g)	%B.W.[a]	Wt.(g)	%B.W.	Wt.(g)	%B.W.	Wt.(g)	%B.W.
0	291[b] ±36	11.11 ±1.63	3.81 ±0.29	1.91 ±0.25	0.66 ±0.07	0.43 ±0.11	0.15 ±0.04	0.56 ±0.11	0.19 ±0.04
100	286 ±29	11.07 ±0.97	3.89 ±0.31	1.97 ±0.18	0.69 ±0.06	0.44 ±0.10	0.15 ±0.03	0.59 ±0.10	0.21 ±0.04
200	287 ±28	11.28 ±1.46	3.93 ±0.26	1.94 ±0.21	0.68 ±0.07	0.44 ±0.10	0.15 ±0.04	0.65[c] ±0.14	0.23 ±0.04
300	287 ±36	11.35 ±1.74	3.95 ±0.26	1.95 ±0.23	0.68 ±0.08	0.51 ±0.16	0.18 ±0.05	0.68[c] ±0.11	0.24 ±0.04
400	289 ±35	11.53 ±1.61	3.99 ±0.22	1.98 ±0.27	0.69 ±0.06	0.46 ±0.13	0.16 ±0.05	0.72[c] ±0.13	0.25 ±0.04

[a] Body weight

[b] Mean ± 1 standard deviation

[c] Statistically significant compared to controls (ANOVA, $p \leq 0.05$)

Table 6

Ethylene Glycol Monopropyl Ether-Inhalation Teratology

Summary of Observations at Time of Cesarean Sections

Target Concentration (ppm)	0	100	200	300	400
Number of Females Inseminated	30	30	30	30	30
Number of Females Pregnant	24	26	25	27	29
Number Litters Completely Resorbed	0	0	0	2[e]	0
Number Litters with Resorptions	11	13	9	14	13
Corpora Lutea Per Dam[a]	13.4±3.4	12.8±1.8	12.6±3.3	13.7±4.9	12.9±3.1
Implantations Per Dam[a]	11.4±3.5	11.8±2.6	11.6±4.1	11.2±4.2	11.5±3.7
Viable Fetuses Per Litter[a]	10.5±3.1	10.9±2.9	11.1±3.9	10.5±4.3	10.7±3.5
Resorptions Per Litter[a]	0.9±1.2	0.9±1.0	0.6±0.9	0.7±0.8	0.8±1.2
Resorptions Per Litter with Resorptions[a]	1.9±1.1	1.7±0.8	1.6±0.9	1.3±0.7	1.8±1.2
Dead Fetuses Per Litter[a]	0	0.04±0.2	0	0	0
Pre-Implantation Loss (%)[b]	18.1±23.9	9.4±15.9	10.8±18.4	17.8±23.6	15.1±18.4
Post-Implantation Loss (%)[c]	6.4±9.0	8.8±11.3	4.4±6.9	12.7±26.6[f]	6.2±8.8
Sex Ratio (M:F)	46:54	50:50	50:50	49:51	51:49
Fetal Body Weight (g)[d]	3.63±0.76	3.57±0.55	3.34±0.46	3.39±0.36	3.53±0.61

[a] Mean ± 1 Standard deviation.

[b] % Pre-Implantation Loss $= \frac{(\text{Number of Corpora Lutea} - \text{Number of Implantations}) \times 100}{\text{Number of Corpora Lutea}}$

[c] % Post-Implantation Loss $= \frac{(\text{Number of Implantations} - \text{Number of Viable Implantations}) \times 100}{\text{Number of Implantations}}$

[d] Mean of the litter means ± 1 standard deviation.

[e] Each litter had only one implantation site.

[f] Reflects the two litters completely resorbed; one implant each.

Table 7

Ethylene Glycol Monopropyl Ether-Inhalation Teratology

External Fetal Abnormalities[a]

Target Concentration (ppm)	0	100	200	300	400
No. Fetuses (Litters) Examined	253(24)	274(25)	277(25)	273(24)	309(29)
			- MAJOR DEFECTS -		
Thoracogastroschisis					1
Tail; Severe Atrophy				1	
			- MINOR DEFECTS -		
Hematoma	1	2(2)	1	3(3)	1
Hemorrhagic streak; left side of head				1	
Swelling; dorsal thorax		1			
			- TOTAL EXTERNAL DEFECTS -		
	1	3(3)	1	5(5)	2(2)

[a]Fetuses affected (Litters involved).

Table 8

Ethylene Glycol Monopropyl Ether-Inhalation Teratology

Internal Soft Tissue Fetal Abnormalities[a]

Target Concentration (ppm)	0	100	200	300	400
No. of Fetuses (Litters) Examined:	123(23)	141(25)	139(25)	135(24)	155(29)
			- MAJOR DEFECTS -		
Ringed Aorta			1		
Internal Micrencephaly			1		
Incomplete septation of ascending aorta and pulmonary artery	1				
Anophthalmia; Right eye	1				
			- MINOR DEFECTS -		
Hydrocephalus; slight			1	6(2)	
moderate	2(2)	1			1
Hydronephrosis with hydroureter	2(2)	3(2)			3(1)
Hydronephrosis only	3(3)		2(1)	1	2(1)
Hydroureter only		1		2(1)	2(2)
Urinary bladder; distended	1				
Subcutaneous hemorrhage; head	2(1)	2(1)		1	
			- TOTAL INTERNAL SOFT TISSUE DEFECTS -		
	11(8)	7(5)	4(3)	10(4)	8(5)

[a] Fetuses affected (Litters involved)

Table 9

Ethylene Glycol Monopropyl Ether-Inhalation Teratology in Rats

Summary of Skeletal Examinations[a]

Target Concentration (ppm)	0	100	200	300	400
Number of Fetuses (Litters) Examined	130(24)	133(25)	138(25)	138(24)	153(28)
MAJOR SKELETAL MALFORMATIONS	0	0	0	0	0
MINOR SKELETAL ALTERATIONS					
Ribs:					
Only 12 pair present; 12th pair Rudimentary	1				
Wavy and/or knobby[b]	3(2)	3(2)	3(3)	8(5)	7(6)
Partial ossification (9th & 10th)				1	
Spurs at 7th cervical vertebra	2(2)		3(3)	5(5)	1
TOTAL[b]	6(5)	3(2)	6(6)	13(9)	8(7)
SKELETAL VARIATIONS					
Skull Bones:					
Partial/non-ossification[b]	13(7)	9(5)	26(13)	32[c](14)	27(15)
Vertebrae:					
Cervical Arches; partial ossification			4(3)	1	1
Thoracic Arches; partial ossification					1
Thoracic Centrae; partial ossification[b] (Mainly 1st & 2nd)	22(11)	10[c](6)	30(13)	41[c](15)	43[c](17)
Non-ossification (Mainly 1st & 2nd)[b]	2(2)	3(2)	9(4)	4(4)	14[c](8)
Bilobed appearance (8th-13th)[b]	28(14)	46[c](20)	63[c](23)[c]	57[c](21)[c]	60[c](22)
Split[b]		1		3(2)	4(4)
Lumbar Centrae:					
Partial ossification			1		2(2)
Bilobed appearance (1st)	2(1)			3(3)	5(4)
Split				1	
Sacral Arches:					
Partial/non-ossification (3rd & 4th)	1	5(1)	7(4)	5(3)	4(3)
Sacral Centrae:					
Partial/non-ossification (4th)			3(1)		4(4)
Caudal Vertebrae:					
None present			5(1)		2(2)
Total Vertebral Alterations:[b]	45(19)	51(21)	79[c](23)	73[c](22)	82[c](24)
Pelvic Girdle:					
Partial/non-ossification	1	3(1)	4(2)	1	2(2)
Sternebrae:					
Partial ossification[b]	104(24)	115(25)	130[c](25)	127[c](24)	136[c](28)
Non-ossification[b]	49(16)	39(15)	56(17)	55(17)	51(17)
Bilobed appearance				1	3(2)
Split				1	1
Irregular Shape				5(2)	
< 4 ossification sites present	1	1	7(3)	2(2)	2(2)
Total Sternebral Variations[b]	123(24)	127(25)	136(25)	136(24)	150(28)
14th Thoracolumbar Ribs:					
Rudimentary[b]	18(9)	25(13)	36[c](17)[c]	59[c](20)[c]	73[c](21)[c]
Extra[b]				4(4)	5(5)
Extra Thoracolumbar Vertebra Associated with a supernumerary rib		1		5(3)	
Total Skeletal Variations[b]:	68(22)	74(25)	102[c](25)	109[c](24)	122[c](27)

[a] Figures in body of the table are the number of fetuses affected with the number of litters involved in parenthesis.

[b] Subjected to statistical analysis; Chi square 2 x 5 table and Fisher's Exact Test (two-tailed).

[c] Statistically different from controls ($p \leq 0.05$)

252946R
TX-89-36

"Contains NO CBI"

A DEVELOPMENTAL TOXICITY PROBE STUDY OF ETHYLENE GLYCOL MONOPROPYL ETHER IN THE RABBIT

Walter J. Krasavage, M.S.

TOXICOLOGICAL SCIENCES LABORATORY
HEALTH AND ENVIRONMENT LABORATORIES
EASTMAN KODAK COMPANY
ROCHESTER, NY 14652-3615

June 22, 1989

252946R
TX-89-36

A DEVELOPMENTAL TOXICITY PROBE STUDY OF ETHYLENE GLYCOL MONOPROPYL ETHER IN THE RABBIT

ABSTRACT

Groups of six or seven pregnant New Zealand White rabbits were exposed to 0, 400, 800, or 1000 ppm ethylene glycol monopropyl ether (EP) by inhalation on the 6th through the 18th days of gestation in a dose range finding study to assess the effects of inhalation exposures to EP on the pregnant rabbit and its conceptus. Inhalation exposure to 800 or 1000 ppm EP on the first two to five consecutive days, during the period of organogenesis, produced maternal mortality and moribundity. The does stopped eating and lost weight during this time. The moribund animals were euthanatized. Single does survived 13 consecutive exposures to 800 or 1000 ppm EP. Each of the survivors stopped eating and lost body weight during the first six exposures, but gained weight during the remainder of the study. Both does had normal litters at the time of cesarian section. Hematocrit and mean corpuscular volume were increased in the one doe that survived 13 consecutive exposures to 1000 ppm EP. No mortality or moribundity was seen in does exposed for 13 consecutive days to 400 ppm EP. The animals gained slightly less body weight and ate less feed than the control animals. Mean hematocrit and mean corpuscular volume were statistically significantly increased for the 400 ppm does. Pregnancy rates were comparable among the 400 ppm EP-treated and the control group. Six of seven control rabbits, all six 400 ppm rabbits, and each of the survivors from the 800 and 1000 ppm groups were pregnant. Five of the six 800 ppm and five of the five 1000 ppm animals that died spontaneously or were euthanatized were pregnant and all implantation sites appeared to be developing normally when examined at the time of necropsy. The mean number of implantation sites and corpora lutea of the non-survivors were equal to or greater than the controls and mean number of implantation sites, and corpora lutea, viable fetuses per litter, and mean pre- and post-implantation losses of the 400 ppm EP does were comparable to the controls. Mean weight of the gravid uteri and mean fetal body weights of the fetuses from the survivors were not affected at any exposure level. Thus, inhalation exposures to 1000 or 800 ppm of EP produced a high degree of maternal toxicity in pregnant rabbits, but did not appear to have an effect on the developing conceptus. Thirteen exposures to 400 ppm EP produced slight maternal toxicity evidenced by slight, though not statistically significant, reductions in body weight gain and a statistically significant decrease of feed consumption during the early period of exposure, but did not produce adverse effects on the developing conceptus.

252946R
TX-89-36

A Developmental Toxicity Probe Study of Ethylene Glycol Monopropyl Ether in the Rabbit

PURPOSE

The purpose of the study was to assess the toxicity of ethylene glycol monopropyl ether (EP) when administered to pregnant rabbits by the inhalation route on the 6th through the 18th days of gestation. These data may be used to establish dose levels for a definitive developmental toxicity study of EP in the rabbit.

TESTING FACILITY

Toxicological Sciences Laboratory
Health and Environment Laboratories
Kodak Park (B 320)
Eastman Kodak Company
1100 Ridgeway Avenue
Rochester, NY 14652-3615

SPONSOR

Eastman Chemicals Division
Eastman Kodak Company
Kingsport, TN 37662

STUDY DATES

Initiation Date	June 6, 1988
Receipt of test animals	June 7, 1988
Acclimation period	June 7 to July 11, 1988
Mating period	July 11 and 12, 1988
Exposure period	July 17-30, 1988
Cesarian Sections	August 9 and 10, 1988

REGULATORY COMPLIANCE

The study was conducted in accordance with the Environmental Protection Agency Good Laboratory Standards 40 CFR Part 792, November 29, 1983 and Good Laboratory Practices for Nonclinical Laboratory Studies as promulgated by the Food and Drug Administration, 21 CFR Part 58, September 4, 1987. The study was also conducted in accordance with OECD Principles of Good Laboratory Practice. The study was subjected to the quality assurance auditing procedures as set forth by the Quality Assurance Units of the Eastman Kodak Company.

TEST ARTICLE CHARACTERIZATION

General Description

Test Article Name:	Ethylene Glycol Monopropyl Ether
Synonyms:	2-Propoxyethanol, EP
CAS Number:	2807-30-9
EK Accession Number:	907124
HAEL Number:	88-0017
SRID Number:	T62-15(1-19-88)
Study Numbers:	880017T3(acclimation period) 880017T4(probe study)
Source Of Test Article:	Texas Eastman Company

Physicochemical Properties

Molecular weight	104.15
Molecular formula	$C_5H_{12}O_2$
Structural formula	$C_3H_7OCH_2CH_2OH$
Boiling point	149.5° C
Melting point	below -90° C
Specific gravity	0.913
Vapor pressure	1.3 mm Hg @25° C
Flash point	49° C

Test Article Purity and Stability

Gas chromatographic analyses performed by the Kodak Park Chemical Quality Services Division (CQSD) indicated that the purity of the test article was 99.9% before the exposure period and 99.8% pure after exposure.

TEST SYSTEM

Animals

Thirty male and thirty female New Zealand White rabbits were purchased from Hazleton Research Products (Dutchland), Denver, PA. The females were nulliparous and both sexes were 5-6 months old on receipt. The animals were examined by a veterinarian on arrival and acclimated to the laboratory for 5 weeks prior to the start of the study. Body weights were recorded at least once weekly and clinical signs were performed at least once daily during the acclimation period. The rabbit was chosen as the test species because it is the primary non-rodent species recommended by the U. S. Environmental Protection Agency for use in developmental toxicity studies. There is much historical control data on the rabbit in the literature and the rabbit has been shown to be sensitive to the effects of known developmental toxicants.

TEST SYSTEM (Con't)

Identification

The female rabbits were identified with a metal ear tag containing a unique number. In addition, each female was assigned an acclimation period number and a study number which were cross-referenced to its eartag number. Individual female cages were color coded according to group and had a card attached which contained the animal's ear tag number, the animal's study number, the experiment number and the exposure group. Males were identified with a unique ear tag number and were used only as breeders. The males were not exposed to the test material.

Randomization

Mated females were assigned to three test groups and a negative control group using a computer-generated stratified randomization program which placed an equal number of animals in each group daily and equalized, as closely as possible, the group mean body weights.

Husbandry

The animals were housed individually, (except during mating) in stainless steel cages with wire mesh floors with a stainless steel sub-floor pan to catch urine and feces. Certified Rabbit Diet (Agway® Prolab™ High Fiber Rabbit Formula) and municipal tap water (Monroe County Water Authority) via an automated watering system were available ad libitum . No known contaminants were present in the feed or the water that would interfere with the outcome of the study. Room temperature and relative humidity were controlled at approximately 70 ± 2 °F and 42-60 %, respectively. A photocycle of 12 hours light (6 am - 6 pm)/dark was maintained.

Mating

Natural mating was used. The female was placed in a male's cage and the pair were observed for copulation. When coitus was observed, the female was returned to her original cage. One to two hours later, the female was placed with a second (different) male and the pair were observed for copulation. When the second copulation occurred, the female was considered mated and was returned to her cage. The day of successful mating was designated Day 0 of gestation. The ear tag numbers of the males that mated with a female and the times of copulation were recorded.

STUDY DESIGN

Treatment Groups

Groups of six or seven mated female rabbits were exposed to 0, 400, 800, or 1000 ppm of EP by inhalation for 6 hours per day on Days 6 through 18 of gestation (13 exposures). The inhalation route was chosen since it is a route of potential human exposure to EP.

Test Article Administration

The animals were exposed to vapors of EP in 4.2 m^3 stainless steel and glass inhalation chambers that were maintained under negative pressure (about 0.5" water gauge) with approximately 12 air changes per hour. Distribution of the test material was determined prior to the start of the study by measurements taken at key cage positions throughout each chamber. The test material (liquid) was metered with an FMI Fluid Metering pump (Fluid Metering Inc., Oyster Bay, NY) into a glass bead-packed column where it vaporized and was conducted to the inhalation chamber. EP vapors were quantitated by infrared spectroscopy and chamber vapor concentration was monitored at a fixed reference position at least six times during each exposure. The control chamber was setup similar to the EP chambers except that exposure was to filtered air only. Chamber temperature, relative humidity, and airflow rate were monitored every half hour during exposure. Chamber airflow rate was calibrated weekly and nominal concentrations were determined daily. The concentration of background nongaseous material was measured daily in the highest concentration chamber relative to the air control chamber to ensure that exposures were to a vapor and not an aerosol.

Maternal Clinical Signs

The females were observed, by cageside observation, for obvious clinical signs of toxicity twice daily (except week-ends) on non-treatment days. On days of treatment (Days 6-18 of gestation), observations were made prior to and after exposure. Animals visible through the chamber windows were observed periodically for clinical signs of toxicity during the exposure period. A detailed examination including, but not limited to, examination of the hair, skin, eyes, general activity, feces, and urine, was conducted on each female on the days body weights were recorded.

Maternal Body Weights

Individual body weights were recorded for each female on gestation Days 0, 6, 9, 12, 15, 19, 22, and 28. Body weight gain was calculated from Days 0-6, 6-9, 9-12, 12-15, 15-19, 19-22, 22-28, and 6-19 of gestation.

STUDY DESIGN (Con't)

Maternal Feed Consumption

Feed containers were weighed on the days body weights were recorded and at other times when feed needed to be added to the containers. Individual feed consumption is reported for Days 0-6, 6-9, 9-12, 12-15, 15-19, 19-22, 22-28, and 6-19 of gestation.

POSTMORTEM EVALUATIONS

Maternal

Females that died spontaneously or were killed in a moribund state were necropsied with particular attention to the uterine contents. Implantations present were evaluated to distinguish between normally developing embryos/fetuses and resorptions. All does that survived were fasted overnight and anesthetized by CO_2 inhalation on Day 29 of gestation. The abdominal viscera were exposed by a mid-line incision through the abdominal wall and blood for hematologic determinations was collected via the inferior vena cava. The animals were exsanguinated by severing the inferior vena cava and the terminal body weights were recorded. The uteri with ovaries attached were removed and gravid uteri were weighed. The ovaries were dissected free, trimmed of extraneous tissue and the corpora lutea of pregnancy were counted and recorded. The thoracic cavity was opened and a necropsy examination of the thoracic and abdominal viscera was conducted in situ on each female. The liver, kidneys, spleen, and thymus were removed, trimmed of extraneous tissue, and weighed for organ/body weight comparisons. Samples of these organs were preserved in 10% neutral buffered formalin. Histologic examination of these tissues was not performed. Hematologic determinations consisted of total and differential white blood cell counts, total red blood cell counts, platelet counts, hematocrit, hemoglobin concentration, and calculated red blood cell indices.

Fetal

After the gravid uteri were weighed, the uterine horns were opened and the implantation sites were counted and categorized as: live fetus, dead fetus (no visible degeneration), late resorption (partially or fully formed fetus undergoing degeneration) or early resorption (implantation but no conceptus or placenta present). Viable fetuses were removed from the uterus beginning at each ovary and proceeding to the vagina. Each fetus was blotted dry on absorbent material, examined for external abnormalities and weighed. Following external examination, the fetuses were discarded. The uteri of apparently nonpregnant females were stained with a 10% solution of sodium sulfide and examined for the presence of implantation sites.

STATISTICAL ANALYSES

Where the group size (n) was appropriate, statistical analyses compared the treated groups to the control group. The maternal body weights, corrected maternal body weights, body weight change, absolute and relative organ weights, feed consumption, hematological determinations, and the mean fetal body weights were analyzed statistically using a one-way analysis of variance ($p \leq 0.05$). Bartlett's Test was performed to test equality of variances ($p \leq 0.01$). All analyses were two-tailed tests.

STUDY PERSONNEL

Walter J. Krasavage, M.S.	Study Director
Ruth S. Hosenfeld, A.A.S.	Study Technican
James F. Murphy, B.S.	Study Technican
Milan S. Vlaovic, D.V.M., Ph.D.	Necropsy Pathologist
Gordon J. Hankinson, D.V.M., M.S.	Laboratory Animal Veterinarian
Kenneth A. Robillard, Ph.D.	Analytical Chemist
M. Susan James, A.A.S.	Quality Assurance

Additional personnel are documented in the raw data.

PROTOCOL AND SOP DEVIATIONS

A copy of the protocol and amendments are with the raw data. There were no deviations from the protocol or Standard Operating Procedures.

DATA STORAGE:

A copy of the final report, raw data sheets, tissues, and other non-perishable specimens will be stored in the Health and Environment Laboratories (HAEL) Archives for ten years.

RESULTS

ACCLIMATION PERIOD

Mean body weight gains of all rabbits were normal during the 35 day acclimation period. During Week 1 of the period, one animal fractured a leg and was euthanatized. One animal stopped eating during Week 2 of the period, but resumed eating normally after a few days. One animal had diarrhea on the last two days of the acclimation period and was dropped from the study. Clinical examinations were unremarkable for all other rabbits during the acclimation period and all 28 were selected for mating. Of these 28, 26 of the females mated and were randomized into the the study groups.

RESULTS (Con't)

ANALYTICAL DATA

The overall mean analytical concentrations of EP in the exposure chambers were 400 ±16, 778 ±23, and 955 ±45 ppm compared to target concentrations of 400, 800, and 1000 ppm, respectively. These exposure atmospheres were within 0 to -4.5% of the targeted concentrations. Overall mean chamber temperatures for the exposure period were 22.0 ±0.6, 23.5 ±0.8, 23.2 ±0.8, and 23.6 ±0.8 °C for the control, 400, 800, and 1000 ppm chambers, respectively. Overall mean relative humidity was 44 ±3, 52 ±2, 54 ±3, and 54 ±3% for the control, 400, 800, and 1000 ppm chambers, respectively. An inhalation report and the individual analytical, temperature, and relative humidity data are included in the appendices.

MATERNAL OBSERVATIONS

Mortality

Of six rabbits exposed to 1000 ppm of EP, three died after 2 or 3 exposures and two were euthanatized in extremis; one was euthanatized after four exposures and one after 5 exposures. The sixth animal survived to scheduled sacrifice and a cesarian section was performed on the 29th day of gestation. At 800 ppm, five of seven rabbits died following 2 or 3 exposures and one was euthanatized in extremis after 5 exposures. The seventh animal survived to scheduled sacrifice and a cesarian section was performed on the 29th day of gestation. There was no mortality among rabbits exposed to 400 ppm EP or among the control animals.

Clinical Signs

Five of the six rabbits exposed to 1000 ppm EP had red urine following the first exposure which persisted until they died spontaneously or were euthanatized. The animals that were euthanatized had anorexia, lost weight, and showed depressed activity. One of these animals (Rabbit #326) was pale and ataxic. The one rabbit in the 1000 ppm group that survived had red urine following the fifth exposure which was not seen following subsequent exposures. Otherwise, this animal was clinically normal throughout the study. All rabbits in the 800 ppm group, except the one animal (Rabbit #320) that survived to scheduled sacrifice, had red urine following the first exposure which persisted until the animals died spontaneously or were euthanatized. The survivor (Rabbit #320) had red urine following the first exposure, but was clinically normal throughout the remainder of the study. One rabbit (Rabbit #319), that was euthanatized after the fifth exposure, had anorexia, lost weight, and was pale and ataxic prior to euthanasia. One rabbit each in the 400 ppm group (Rabbit #313) and the control group (Rabbit #306) showed signs of not eating or drinking water on Days 16 through 19 of gestation; i.e., feed consumption was greatly decreased and decreased amounts of urine and feces were seen on the dropping trays under the cages. Another control animal (Rabbit #301) had diarrhea on the 28th and 29th days of gestation.

RESULTS (Con't)

Maternal Observations (con't)

Body Weights

Two rabbits that survived three exposures to 1000 ppm and three rabbits that survived three exposures to 800 ppm EP had mean body weight losses greater than the control group during the first three days of exposure. The body weight loss was statistically significant for the animals in the 1000 ppm group. The one survivor in the 1000 ppm group, after an initial weight loss during the first three days of exposure, gained body weight for the remainder of the study. At the 800 ppm level, the one animal that survived to termination lost weight during the first six days of exposure, but recovered and gained weight during the remainder of the study. The mean body weight gain for the animals exposed to 400 ppm was slightly less, though not statistically significant, than that of the control group during the exposure period.

Feed Consumption

Mean feed consumption of animals exposed to 1000 or 800 ppm was less than that of the control during the first six days of the exposure period (gestation days 6-12). These difference were statistically significant for the 1000 ppm rabbits during the first three days of exposure (gestation days 6-9), but the difference for the 800 ppm group was not statistically significant. At 400 ppm, mean feed consumption was less ($p \leq 0.05$) than the control group during Days 9-12 of gestation.

Gross Pathology

In survivors, necropsy examinations revealed pale livers for four of seven control animals, three of six 400 ppm animals, and the one surviving 800 ppm animal. One control and one 400 ppm rabbit had fatty infiltration of the liver. In rabbits from the 1000 and 800 ppm groups that died spontaneously or were euthanatized in extremis, gross pathology included pale livers in six of six 800 ppm does and a small liver in one of six. Four of five 1000 ppm does had pale livers and two of five had small livers. Pallor of the myocardium was seen in four of six 800 ppm does and two of five 1000 ppm does. One of six 800 ppm does and one of five 1000 ppm does had hemorrhage in the glandular portion of the stomach, and one of six 800 ppm does and two of five 1000 ppm does had distended urinary bladders. Red discolored urine was seen in the urinary bladders of five of six 800 ppm does and five of five 1000 ppm does. Hematomas or focal hemorrhages in the vaginal wall were seen in all animals from the 800 and 1000 ppm groups that died spontaneously or were euthanatized. The cortex of the kidney was pale in one animal each from the 800 and 1000 ppm exposure levels and one doe from the 1000 ppm group had a smaller than normal thymus.

RESULTS (Con't)

Maternal Observations (con't)

Four of six 800 ppm does and three of five 1000 ppm does had dark spleens, two of five 1000 ppm does had a smaller than normal spleen, and one doe each in the 800 and 1000 ppm groups had an accessory structure on the spleen. Reddish encrustations were noted around the nares of one of six does from the 800 ppm group. One of six 800 ppm does and two of five 1000 ppm does had pale skin or skeletal muscle.

Organ Weights

Mean absolute and relative kidney, liver, spleen, and thymus weights for the animals exposed to 400 ppm were not statistically significantly different than the mean control organ weights. In does that survived the 800 or 1000 ppm exposures (one at each level), the absolute and relative weights of the liver, kidneys, and spleen were similar to the mean weights of these organs for the control and 400 ppm groups, while the absolute and relative weights of the thymus were higher than the mean control weight for the 800 ppm survivor and lower than the mean control weight for the 1000 ppm survivor.

Hematologic Determinations

Mean hematocrit concentration and the average mean corpuscular volume were statistically significantly increased compared to the controls for the rabbits exposed to 400 ppm EP. Similar results were seen for the one animal that survived in the 1000 ppm group. Because of clot formation in the hematocrit tube of the one survivor in the 800 ppm group mean hematocrit concentration and mean corpuscular volume were not determined for this doe. The total white blood cell and red blood cell counts for the single does that survived the 800 or 1000 ppm exposures were similar to the mean control counts. Red and white blood cell counts, hemoglobin concentration, platelet counts, and mean corpuscular hemoglobin appeared to be unaffected by exposure to 400 ppm EP. Differential white blood cells were not affected by exposure to 400 ppm, but the polymorphonuclear leukocyte counts were increased and the lymphocyte counts were decreased in the single animals that survived exposure to 800 or 1000 ppm EP. Blood cell morphology was normal at all exposure levels.

OBSERVATIONS AT THE TIME OF CESARIAN SECTIONS

Pregnancy rates were comparable among the treated and control groups. Six of seven control animals, six of six 400 ppm animals, six of seven 800 ppm animals, and six of six 1000 ppm animals were pregnant. All pregnant control and 400 ppm animals and the single survivors from the 800 and 1000 ppm groups delivered litters with viable fetuses.

RESULTS (Con't)

Observations at the Time of Cesarian Sections (Con't)

Gross examination of the uteri of the animals that died or were euthanatized revealed that all were pregnant and the number of implantation sites and corpora lutea were comparable to the mean number for the control group. All implantation sites contained embryos which appeared to be developing normally. Mean number of corpora lutea, implantations, viable fetuses, and resorptions per litter and pre- and post- implantation losses were not affected at any EP exposure level. Gravid uterine weights and mean fetal body weights were comparable among the control and treated groups. The corrected mean terminal body weight of the 400 ppm does was comparable to the mean control body weight, while the terminal body weights of the single survivors from the 800 and 1000 ppm groups were slightly less than the mean control body weight.

DISCUSSION AND CONCLUSION

Maternal toxicity was evident at the high and intermediate dose levels as two or three consecutive exposures of 1000 or 800 ppm of ethylene glycol monopropyl ether produced mortality in five of seven and three of six pregnant rabbits, respectively. A few does survived four or five consecutive exposures to these concentrations, but became moribund and were euthanatized. One doe exposed to 1000 and one doe exposed to 800 ppm survived 13 consecutive exposures of EP and had normal appearing litters at the time of cesarian section. Thirteen consecutive exposures to 400 ppm EP did not produce mortality or moribundity. However, slight maternal toxicity was evident as a lower, though not statistically significant, mean body weight gain for the 400 ppm does compared to the mean control weight gain. Mean feed consumption was slightly less for these animals during the exposure period, reaching statistical significance during Days 9-12 of gestation. Mean hematocrit concentration and mean corpuscular volume were significantly increased in the 400 ppm animals.

Reproductive indices and fetal endpoints recorded at the time of cesarian sections were not affected by exposure to EP. Five of the five animals exposed to 1000 ppm and five of six animals exposed to 800 ppm, that died spontaneously or were euthanatized in a moribund state, were found to be pregnant when necropsied. The number of implantation sites, and pre- and post-implantation losses were comparable to the control values and all embryos appeared to be developing normally. The one doe that survived 800 ppm and the doe that survived 1000 ppm each had normal-size litters with viable fetuses at the time of cesarian sections. All six does exposed to 400 ppm EP had litters with viable fetuses. The mean litter size, number of implantation sites and corpora lutea of pregnancy, pre- and post-implantation losses for all compound-treated groups, and the mean fetal body weights for the 400 ppm group were comparable to those of the controls. External examinations of the fetuses revealed no abnormalities.

Thus, inhalation exposures to 1000 or 800 ppm of EP produced a high degree of maternal toxicity in pregnant rabbits, but did not appear to have an effect on the developing conceptus. Thirteen exposures to 400 ppm EP produced slight maternal toxicity evidenced by slight, though not statistically significant, reductions in body weight gain and a statistically significant decrease of feed consumption during the early period of exposure, but did not produce adverse effects on the developing conceptus.

Walter J. Krasavage

Date: 6-22-89

Walter J. Krasavage, M.S.
Study Director
Manager, Reproductive/Developmental Toxicology
Toxicological Sciences Laboratory, HAEL

Douglas C. Topping

Date: 6/21/89

Douglas C. Topping, Ph.D.,
Unit Director, Mammalian Toxicology
Toxicological Sciences Laboratory, HAEL

M. S. James

Date: 6/21/89

M.S. James, A.A.S
Coordinator
Quality Assurance Unit, HAEL

John L. O'Donoghue

Date: 6/22/89

John L. O'Donoghue, V.M.D., Ph.D.
Director,
Toxicological Sciences Laboratory, HAEL

Q.A. INSPECTION STATEMENT
(CFR 58.35(B)(7) 792.35(B)(7) 160.35(B)(7))

STUDY: 88-0017-2 STUDY DIRECTOR: KRASAVAGE,W.J.
ACCESSION NUMBER: 907124

06/21/89

STUDY TYPE: DEVELOPMENTAL TOXICITY SCREEN

M. L. James
(AUDITOR, QUALITY ASSURANCE UNIT)

6/21/89
DATE

THIS STUDY WAS INSPECTED BY 1 OR MORE PERSONS OF THE QUALITY ASSURANCE UNIT OF THE HAEL, EASTMAN KODAK COMPANY, ROCHESTER, N.Y. AND WRITTEN STATUS REPORTS WERE SUBMITTED ON THE FOLLOWING DATES:

INSPECTION DATES	PHASE(S) INSPECTED	STATUS REPORT DATES
06/06/88	PROTOCOL SUBMISSION	
06/23/88	PROTOCOL AMENDMENT ZIP CODE CHANGED STUDY NUMBER 880017T4 ADDED HIGHEST DOSE LEVEL CHANGED FROM 1200 TO 1000 PPM WEEKLY MEASUREMENTS OF NONGASEOUS MATERIAL CHANGED TO DAILY	
07/11/88	TEST SYSTEMS WEIGHTS TEST SYSTEM BREEDING TEST SYSTEM CULL AND RANDOMIZATION BREEDING OF "A" FEMALES	
07/14/88	PROTOCOL AMENDMENT NUMBER OF TEST SYSTEMS CHANGED PER GROUP BODY WEIGHT RANGE CHANGED	
07/21/88	TEST SYSTEMS WEIGHTS DAY 9 BODY WEIGHTS	
08/09/88	CAESAREAN SECTIONS TEST SYSTEMS WEIGHTS TEST SYSTEM BLEEDING COUNT CORPORA LUTEA COUNT IMPLANTATION SITES NECROPSY HEMATOLOGY	
05/23/89	FINAL REPORT REVIEW	
05/24/89	FINAL REPORT REVIEW	
05/25/89	FINAL REPORT REVIEW	05/25/89
06/20/89	FINAL REPORT REVIEW	06/20/89

QUALITY ASSURANCE INSPECTION STATEMENT

HAEL Study:
Requestor: E. Renner
Auditee Group & Location: EAS/CQSD; Bldg. 320
Accession #: 907124
In-Process Inspection Date:
CQS Job #: EE8H014
HAEL #: 88-0017
Date Sample(s) Received in CQS: 04-07-88
Date This Report Sent To Analytical Director: 04-26-88

Request for Analysis #	Analysis	Test Report Date	Test Report Inspection Date
131140	Pur., Struct.	04-20-88	04-26-88

We have inspected the analytical work described above in accordance with 40 CFR 792.35(b)(3). Our findings and a summary of corrective actions, if necessary, have been sent to the supervisor of the analytical laboratory and to management in accordance with Good Laboratory Practice Standards 40 CFR 792.35(b)(6) and 21 CFR 58.35(b)(3).

M. J. Boccacino, Quality Engineer
GLP Compliance, QSO/QSS

A DEVELOPMENTAL TOXICITY PROBE STUDY OF ETHYLENE GLYCOL MONOPROPYL ETHER IN THE RABBIT

Table of Contents for Appendix

	Appendix Page
Acclimation Period Data (88-0017T3)	
Table of Distribution and Fate of Animals	1
Grouped Summary of Clinical Signs	2
Plot of Body Weights	3
Mean Body Weight	4
Individual Body Weights	5
Study Period Data (88-0017T4)	
Table of Distribution and Fate of Animals	6
Grouped Summary of Clinical Signs	7
Plot of Body Weights	11
Mean Body Weight Table	12
Individual Body Weights	13
Mean Body Weight Change	14
Individual Body Weight Changes	15
Plot of Feed Consumption	16
Mean Feed Consumption	17
Individual Feed Consumption	18
Summary Hematology Determination	19
Individual Hematology Determination	20
Summary Cell Morphology	22
Individual Cell Morphology	23
Mean Organ and Terminal Body Weight	24
Individual Organ and Terminal Body Weight	25
Pathologist's Report	26
Summary Gross Pathology Table	27

A DEVELOPMENTAL TOXICITY PROBE STUDY OF ETHYLENE GLYCOL MONOPROPYL ETHER IN THE RABBIT

Table of Contents for Appendix (Con't)

	Appendix Page
Individual Gross Pathology Table	29
Gross Pathology Comment	35
Summary of Observations Collected at the Time of Cesarian Section	36
Individual Female Data Collected at Cesarian Section	37
Individual Litter Data Collected at Cesarian Section	41
Individual Litter Data - External Fetal Alterations	45
Test Article Purity Analysis and Structure Confirmation Report	51
Inhalation Exposure Report and Summary of Exposure Data	53

DISTRIBUTION AND FATE OF FEMALES

HAEL NO. 88-0017 ACCESSION NO. 907124 EXPERIMENT NO. 880017T3
START DATE: 07-JUN-88 ROUTE: NONE - ACCLIMATION PERIOD

	DOSE GROUP (PPM) 000.000
Females on Study	30
Total Females Dead/Euthanatized	1
Total Females Transfered to 88-0017T4	29

GROUPED SUMMARY OF CLINICAL SIGNS

EXPERIMENT # 880017T3 EXPERIMENT START DATE: 7-JUN-88 COMPOUND # 88-0017
SOFTWARE VERS # 3.0
ACCESSION NUMBER 907124

SEX - FEMALE OBSERVATION PERIOD - A.M.

CLINICAL SIGN	NO. OF ANIMALS	MEAN ONSET DAY	ONSET S.D. #DAYS	ANIMALS AFFECTED
GROUP 1 - 0.000 MG/KG				
* NORMAL	2			107,124
RIGHT HINDLIMB				
FRACTURE	1	1.	0.	117
INDUCED DEATH, CARBON DIOXIDE	4	27.	17.	107,111,117,124
DEHYDRATION	1	17.	0.	103
DIARRHEA	1	34.	0.	111
TRANSFERRED FROM STUDY	26	34.	1.	101-106,108-110,112-116,118-123,125-130
FECES				
DECREASED	1	17.	0.	103

KEY: *-INDICATES ANIMALS SHOWING ONLY CLINICAL EXAM NORMAL, MORIBUNDITY/MORTALITY CHECK NORMAL OR CAGESIDE OBSERVATION NORMAL

EXPERIMENT # 880017T3 EXPERIMENT START DATE: 07-JUN-88

COMPOUND # 88-0017
VERSION # 3.
ACCESSION # 907124
0.000 MG/KG F

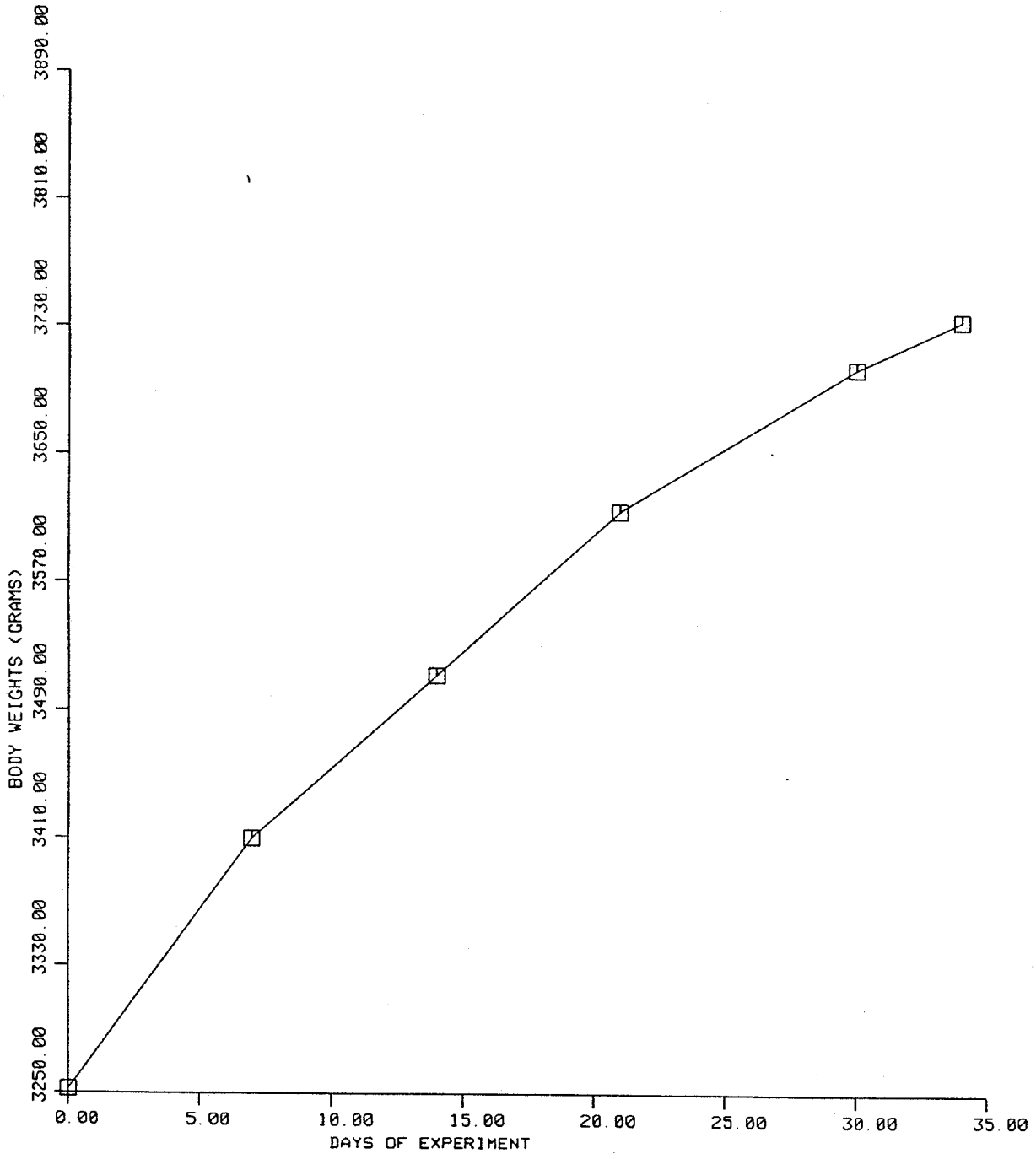

MEAN FOR BODY WEIGHT (GRAMS)

EXPERIMENT # 880017T3 EXPERIMENT START DATE: 7-JUN-88 COMPOUND # 88-0017
SOFTWARE VERS # 3.0
ACCESSION NUMBER 907124

		0.000 MG/KG GROUP-F	
WEEK #	1		
DAY	0	3252.0	A
		276.7	B
		30	C
DAY	7	3409.7	
		332.2	
		29	
WEEK #	2		
DAY	14	3511.9	
		309.7	
		29	
WEEK #	3		
DAY	21	3614.5	
		354.4	
		29	
WEEK #	5		
DAY	30	3705.1	
		363.5	
		29	
DAY	34	3735.0	
		390.6	
		29	

Key: A = Mean value
B = ± Standard deviation
C = Number of values per group

INDIVIDUAL ANIMAL BODY WEIGHTS (GRAMS)

EXPERIMENT # 880017T3 EXPERIMENT START DATE: 7-JUN-88 COMPOUND # 88-0017
SOFTWARE VERS # 3.0
ACCESSION NUMBER 907124

0.000 MG/KG GROUP-F

ANIMAL #	101	102	103	104	105	106	107	108	109	110
DAY 0	3473.0	3307.0	3005.0	3054.0	3587.0	3049.0	3212.0	3187.0	3622.0	2969.0
DAY 7	3597.0	3503.0	2994.0	3193.0	3787.0	3142.0	3338.0	3359.0	3881.0	3168.0
DAY 14	3733.0	3691.0	3163.0	3332.0	3891.0	3284.0	3465.0	3421.0	3840.0	3338.0
DAY 21	3866.0	3854.0	3121.0	3382.0	3854.0	3285.0	3537.0	3540.0	4065.0	3439.0
DAY 30	3919.0	4025.0	3404.0	3437.0	4064.0	3349.0	3620.0	3621.0	4120.0	3704.0
DAY 34	3929.0	4079.0	3491.0	3471.0	4052.0	3296.0	3654.0	3674.0	4166.0	3747.0

ANIMAL #	111	112	113	114	115	116	117	118	119	120
DAY 0	2869.0	3221.0	3209.0	3799.0	3174.0	2917.0	3245.0	3026.0	3291.0	3069.0
DAY 7	3052.0	3420.0	3192.0	4004.0	3399.0	2932.0		2985.0	3486.0	3262.0
DAY 14	3175.0	3604.0	3201.0	3975.0	3445.0	2876.0	*	3294.0	3721.0	3348.0
DAY 21	3287.0	3675.0	3238.0	4205.0	3493.0	2901.0		3238.0	3902.0	3491.0
DAY 30	3293.0	3671.0	3281.0	4193.0	3559.0	2935.0		3277.0	4152.0	3582.0
DAY 34	3147.0	3754.0	3330.0	4273.0	3602.0	2895.0		3273.0	4296.0	3641.0

ANIMAL #	121	122	123	124	125	126	127	128	129	130
DAY 0	3647.0	2884.0	2944.0	3357.0	3190.0	3495.0	3292.0	3213.0	3242.0	4010.0
DAY 7	3866.0	3076.0	3089.0	3475.0	3349.0	3610.0	3596.0	3185.0	3673.0	4267.0
DAY 14	3906.0	3314.0	3118.0	3561.0	3428.0	3866.0	3692.0	3264.0	3645.0	4254.0
DAY 21	4026.0	3541.0	3206.0	3661.0	3546.0	4117.0	3801.0	3347.0	3835.0	4367.0
DAY 30	3936.0	3745.0	3254.0	3724.0	3507.0	4266.0	3971.0	3431.0	3990.0	4417.0
DAY 34	3984.0	3757.0	3263.0	3731.0	3562.0	4291.0	4000.0	3447.0	4012.0	4499.0

KEY: NB - NOT BRED, NP - NOT PREGNANT : POSITIVE STAIN, NN - NOT PREGNANT : NEGATIVE STAIN

* = ANIMAL DIED

DISTRIBUTION AND FATE OF FEMALES

HAEL NO. 88-0017 ACCESSION NO. 907124 EXPERIMENT NO. 880017T4
START DATE: 11-JUL-88 ROUTE: INHALATION

	DOSE GROUP (PPM) 0.000	400.000	800.000	1000.000
Females on Study	7	6	7	6
Females Dead/Euthanatized in extremis	0	0	6	5
Not Pregnant	0	0	1	0
Pregnant	0	0	5	5
Females Aborted/Delivered	0	0	0	0
Females Examined at C-Section	7	6	1	1
Not Pregnant	1	0	0	0
Pregnant	6	6	1	1
Females With Non-Viable Implants Only	0	0	0	0
Females With Viable Fetuses	6	6	1	1
Total Females Pregnant	6	6	6	6

GROUPED SUMMARY OF CLINICAL SIGNS

EXPERIMENT # 880017T4 EXPERIMENT START DATE: 11-JUL-88 COMPOUND # 88-0017
SOFTWARE VERS # 3.0
ACCESSION NUMBER 907124

SEX - FEMALE OBSERVATION PERIOD - A.M.

CLINICAL SIGN	NO. OF ANIMALS	MEAN ONSET DAY	ONSET S.D. #DAYS	ANIMALS AFFECTED
GROUP 1 - 0.000 PPM				
* NORMAL	4			302-304,307
FEED SPILLAGE	2	17.	15.	301,305
DIARRHEA	1	28.	0.	301
INDUCED DEATH, CARBON DIOXIDE	7	29.	0.	301-307
CAGE OBS. -FECES				
DECREASED VOLUME	1	17.	0.	306
CAGE OBS. -URINE				
DECREASED VOLUME	1	19.	0.	306
GROUP 2 - 400.000 PPM				
* NORMAL	1			312
FEED SPILLAGE	3	10.	11.	308-309,311
DIARRHEA	1	28.	0.	310
INDUCED DEATH, CARBON DIOXIDE	6	29.	0.	308-313
CAGE OBS. -URINE				
DECREASED VOLUME	1	16.	0.	313
CAGE OBS. -FECES				
DECREASED VOLUME	1	16.	0.	313
GROUP 3 - 800.000 PPM				
SPONTANEOUS DEATH	4	8.	0.	315,317-318,321
ATAXIA	1	10.	0.	319
PALLOR	1	10.	0.	319
FEED SPILLAGE	1	18.	0.	320
INDUCED DEATH, CARBON DIOXIDE	1	29.	0.	320
CAGE OBS. -URINE				
DISCOLORATION,RED	7	7.	0.	315-321
CAGE OBS. -FECES				
DECREASED VOLUME	6	7.	1.	315-319,321

KEY: *-INDICATES ANIMALS SHOWING CLINICAL EXAM NORMAL, MORIBUNDITY/MORTALITY CHECK NORMAL OR CAGESIDE OBSERVATION NORMAL

GROUPED SUMMARY OF CLINICAL SIGNS

EXPERIMENT # 880017T4 EXPERIMENT START DATE: 11-JUL-88 COMPOUND # 88-0017
SOFTWARE VERS # 3.0
ACCESSION NUMBER 907124

SEX - FEMALE OBSERVATION PERIOD - A.M.

CLINICAL SIGN	NO. OF ANIMALS	MEAN ONSET DAY	ONSET S.D. #DAYS	ANIMALS AFFECTED
GROUP 4 - 1000.000 PPM				
FEED SPILLAGE	1	6.	0.	324
SPONTANEOUS DEATH	2	7.	1.	322-323
GENERAL ACTIVITY DEPRESSED	2	10.	1.	325-326
INDUCED DEATH, CARBON DIOXIDE	3	16.	11.	325-327
ATAXIA	1	10.	0.	326
PALLOR	1	10.	0.	326
CAGE OBS. -URINE				
DISCOLORATION,RED	5	7.	0.	322-326
DECREASED VOLUME	2	9.	1.	324,326
CAGE OBS. -FECES				
DECREASED VOLUME	5	7.	1.	323-327

KEY: *-INDICATES ANIMALS SHOWING ONLY CLINICAL EXAM NORMAL, MORIBUNDITY/MORTALITY CHECK NORMAL OR CAGESIDE OBSERVATION NORMAL

GROUPED SUMMARY OF CLINICAL SIGNS

EXPERIMENT # 880017T4 EXPERIMENT START DATE: 11-JUL-88 COMPOUND # 88-0017
SOFTWARE VERS # 3.0
ACCESSION NUMBER 907124

SEX - FEMALE OBSERVATION PERIOD - DURING DOSE

CLINICAL SIGN	NO. OF ANIMALS	MEAN ONSET DAY	ONSET S.D. #DAYS	ANIMALS AFFECTED
GROUP 1 - 0.000 PPM				
CHAMB. OBS.				
CHAMBER OBSERVATION, NORMAL	7	6.	0.	301-307
GROUP 2 - 400.000 PPM				
CHAMB. OBS.				
CHAMBER OBSERVATION, NORMAL	6	6.	0.	308-313
GROUP 3 - 800.000 PPM				
SPONTANEOUS DEATH	1	8.	0.	316
GENERAL ACTIVITY DEPRESSED	1	10.	0.	319
CHAMB. OBS.				
CHAMBER OBSERVATION, NORMAL	7	6.	0.	315-321
CAGE OBS. -URINE				
DISCOLORATION,RED	1	8.	0.	316
GROUP 4 - 1000.000 PPM				
SPONTANEOUS DEATH	1	8.	0.	324
GENERAL ACTIVITY DEPRESSED	1	10.	0.	326
CHAMB. OBS.				
CHAMBER OBSERVATION, NORMAL	6	6.	0.	322-327
CAGE OBS. -URINE				
DISCOLORATION,RED	1	8.	0.	324

KEY: *-INDICATES ANIMALS SHOWING ONLY CLINICAL EXAM NORMAL, MORIBUNDITY/MORTALITY CHECK NORMAL OR CAGESIDE OBSERVATION NORMAL

GROUPED SUMMARY OF CLINICAL SIGNS

EXPERIMENT # 880017T4 EXPERIMENT START DATE: 11-JUL-88 COMPOUND # 88-0017
SOFTWARE VERS # 3.0
ACCESSION NUMBER 907124

SEX - FEMALE OBSERVATION PERIOD - P.M.

CLINICAL SIGN	NO. OF ANIMALS	MEAN ONSET DAY	ONSET S.D. #DAYS	ANIMALS AFFECTED
GROUP 1 - 0.000 PPM				
* NORMAL	6			301-305,307
CAGE OBS. -FECES				
DECREASED VOLUME	1	20.	0.	306
CAGE OBS. -URINE				
DECREASED VOLUME	1	20.	0.	306
GROUP 2 - 400.000 PPM				
* NORMAL	6			308-313
GROUP 3 - 800.000 PPM				
* NORMAL	3			316,318,320
PALLOR	1	9.	0.	319
ATAXIA	1	9.	0.	319
DEPRESSION, POST-DOSE	1	10.	0.	319
INDUCED DEATH, CARBON DIOXIDE	1	10.	0.	319
CAGE OBS. -URINE				
DISCOLORATION,RED	4	7.	0.	315,317,319,321
DECREASED VOLUME	1	10.	0.	319
CAGE OBS. -FECES				
DECREASED VOLUME	1	10.	0.	319
GROUP 4 - 1000.000 PPM				
* NORMAL	2			322,325
PALLOR	1	9.	0.	326
ATAXIA	1	9.	0.	326
CAGE OBS. -URINE				
DISCOLORATION,RED	4	8.	1.	323-324,326-327

KEY: *-INDICATES ANIMALS SHOWING ONLY CLINICAL EXAM NORMAL, MORIBUNDITY/MORTALITY CHECK NORMAL OR CAGESIDE OBSERVATION NORMAL

EXPERIMENT # 880017T4 EXPERIMENT START DATE: 11-JUL-88 COMPOUND # 88-0017
VERSION # 3.
ACCESSION # 907124
□ 0.000 PPM F
○ 400.000 PPM F
△ 800.000 PPM F
+ 1000.000 PPM F

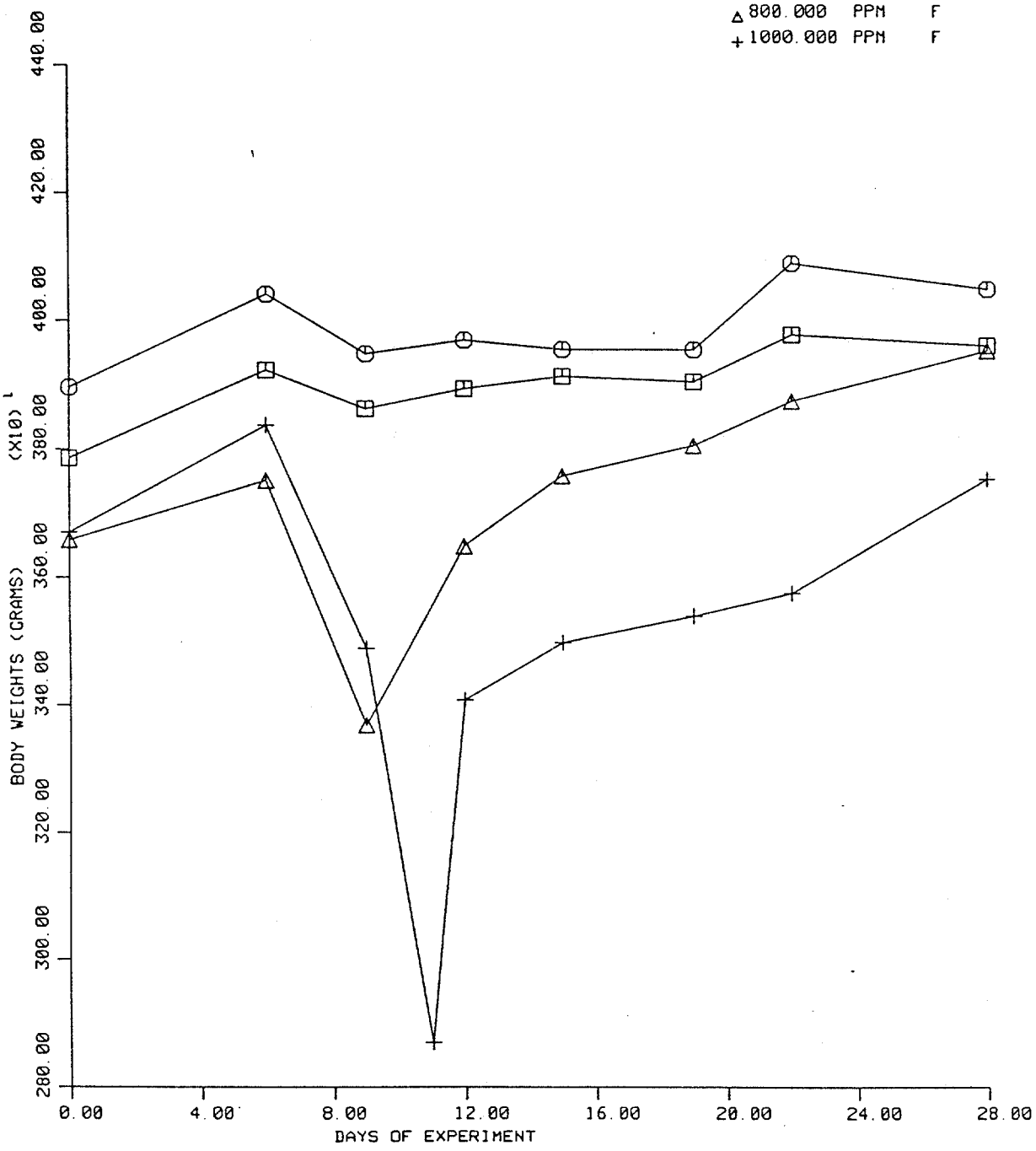

MEAN FOR BODY WEIGHT (GRAMS)

EXPERIMENT # 880017T4 EXPERIMENT START DATE: 11-JUL-88 COMPOUND # 88-0017
SOFTWARE VERS # 3.0
ACCESSION NUMBER 907124

		0.000 PPM GROUP-F	400.000 PPM GROUP-F	800.000 PPM GROUP-F	1000.000 PPM GROUP-F
WEEK #	1				
DAY	0	3785.0 A	3894.8	3657.0	3727.3
		451.3 B	403.2	358.2	393.3
		6 C	6	6	6
DAY	6	3924.0	4040.5	3750.5	3837.0
		409.1	400.0	367.7	396.7
		6	6	6	6
WEEK #	2				
DAY	9	3863.8	3949.0	3368.5	3489.3
		392.1	372.0	487.2	501.6
		6	6	2	3
DAY	12	3894.5	3971.2	3650.0	3409.0
		359.7	370.3	0.0	0.0
		6	6	1	1
WEEK #	3				
DAY	15	3915.5	3957.3	3759.0	3500.0
		352.3	302.6	0.0	0.0
		6	6	1	1
DAY	19	3907.7	3956.5	3808.0	3542.0
		370.5	261.4	0.0	0.0
		6	6	1	1
WEEK #	4				
DAY	22	3980.7	4093.3	3878.0	3577.0
		403.9	356.6	0.0	0.0
		6	6	1	1
DAY	28	3964.8	4053.0	3957.0	3755.0
		268.0	328.0	0.0	0.0
		6	6	1	1

KEY: A = Mean value
B = ± Standard deviation
C = Number of values per group

NOTE: Mean values do not include NN or DN values.

INDIVIDUAL ANIMAL BODY WEIGHTS (GRAMS)

EXPERIMENT # 880017T4 EXPERIMENT START DATE: 11-JUL-88 COMPOUND # 88-0017
SOFTWARE VERS # 3.0
ACCESSION NUMBER 907124

0.000 PPM GROUP-F

ANIMAL #	301	302	303 NN	304	305	306	307
DAY 0	4052.0	3929.0	3296.0	2895.0	4077.0	4004.0	3753.0
DAY 6	4206.0	4092.0	3590.0	3123.0	4123.0	4135.0	3865.0
DAY 9	4160.0	3963.0	3474.0	3093.0	4064.0	4055.0	3848.0
DAY 12	4154.0	4026.0	3536.0	3185.0	4081.0	4048.0	3873.0
DAY 15	4196.0	4075.0	3515.0	3245.0	4172.0	3924.0	3881.0
DAY 19	4268.0	4082.0	3389.0	3241.0	4132.0	3745.0	3978.0
DAY 22	4360.0	4180.0	3539.0	3293.0	4274.0	3721.0	4056.0
DAY 28	4000.0	4207.0	3627.0	3540.0	4250.0	3778.0	4014.0

400.000 PPM GROUP-F

ANIMAL #	308	309	310	311	312	313	314 NB
DAY 0	3754.0	3747.0	3471.0	4273.0	3619.0	4505.0	
DAY 6	3859.0	3888.0	3641.0	4449.0	3776.0	4630.0	
DAY 9	3740.0	3807.0	3575.0	4322.0	3746.0	4504.0	
DAY 12	3889.0	3812.0	3560.0	4324.0	3724.0	4518.0	
DAY 15	3943.0	3919.0	3550.0	4295.0	3728.0	4309.0	
DAY 19	3935.0	3867.0	3638.0	4307.0	3766.0	4226.0	
DAY 22	3966.0	3934.0	3763.0	4386.0	3839.0	4672.0	
DAY 28	3953.0	3999.0	3552.0	4368.0	3981.0	4465.0	

800.000 PPM GROUP-F

ANIMAL #	315 DP	316 DP	317 DP	318 DN	319 EP	320	321 DP
DAY 0	3491.0	4166.0	3330.0	4359.0	3276.0	3705.0	3974.0
DAY 6	3555.0	4193.0	3450.0	4510.0	3342.0	3784.0	4179.0
DAY 9					3024.0	3713.0	
DAY 12						3650.0	
DAY 15						3759.0	
DAY 19						3808.0	
DAY 22						3878.0	
DAY 28						3957.0	

1000.000 PPM GROUP-F

ANIMAL #	322 DP	323 DP	324 DP	325 EP	326 EP	327	328 NB
DAY 0	3674.0	4079.0	3602.0	4303.0	3254.0	3452.0	
DAY 6	3725.0	4155.0	3724.0	4465.0	3422.0	3531.0	
DAY 9				4031.0	3041.0	3396.0	
DAY 11					2870.0		
DAY 12						3409.0	
DAY 15						3500.0	
DAY 19						3542.0	
DAY 22						3577.0	
DAY 28						3755.0	

KEY: NB - NOT BRED, NN - NOT PREGNANT : NEGATIVE STAIN, EP - EUTHANATIZED : PREGNANT
DP - SPONTANEOUS DEATH : PREGNANT, DN - SPONTANEOUS DEATH : NOT PREGNANT

Experiment No. 880017T4 Accession No. 907124

Ethylene Glycol Monopropyl Ether
A Developmental Toxicity Probe Study in The Rabbit

Mean Body Weight Change

Gestation Days -		0-6	6-9	9-12	12-15	15-19	19-22	22-28	6-19
Dose									
0 PPM	Mean	139	-60	31	21	-8	73	-16	-16
	SD	60	40	39	76	98	56	198	190
	N	6	6	6	6	6	6	6	6
400 PPM	Mean	146	-92	22	-14	-1	137	-40	-84
	SD	27	39	64	108	62	154	143	172
	n	6	6	6	6	6	6	6	6
800 PPM	Mean	94	-195	-63	109	49	70	79	24
	SD	62	175	0	0	0	0	0	0
	n	6	2	1	1	1	1	1	1
1000 PPM	Mean	110	-317	13	91	42	35	178	11
	SD	49	160	0	0	0	0	0	0
	n	6	3	1	1	1	1	1	1

Ethylene Glycol Monopropyl Ether
A Developmental Toxicity Probe Study in The Rabbit

Body Weight Difference Between Days

Gestation Days -			0-6	6-9	9-12	12-15	15-19	19-22	22-28	6-19
Dose	Animal No.									
0PPM	301		154	-46	-6	42	72	92	-360	62
	302		163	-129	63	49	7	98	27	-10
	303	NN	294	-116	62	-21	-126	150	88	-201
	304		228	-30	92	60	-4	52	247	118
	305		46	-59	17	91	-40	142	-24	9
	306		131	-80	-7	-124	-179	-24	57	-390
	307		112	-17	25	8	97	78	-42	113
400 PPM	308		105	-119	149	54	-8	31	-13	76
	309		141	-81	5	107	-52	67	65	-21
	310		170	-66	-15	-10	88	125	-211	-3
	311		176	-127	2	-29	12	79	-18	-142
	312		157	-30	-22	4	38	73	142	-10
	313		125	-126	14	-209	-83	446	-207	-404
	314	NB								
800 PPM	315		64							
	316		27							
	317		120							
	318	DN	151							
	319		66	-318						
	320		79	-71	-63	109	49	70	79	24
	321		205							
1000 PPM	322		51							
	323		76							
	324		122							
	325		162	-434						
	326		168	-381						
	327		79	-135	13	91	42	35	178	11
	328	NB								

KEY: NB - NOT BRED, NN - NOT PREGNANT : NEGATIVE STAIN, DN - DEAD ; NOT PREGNANT.
NN ANIMALS' DATA ARE NOT INCLUDED IN THE CALCULATION OF THE MEANS.

EXPERIMENT # 880017T4 EXPERIMENT START DATE: 11-JUL-88 COMPOUND # 88-0017
VERSION # 3.
ACCESSION # 907124

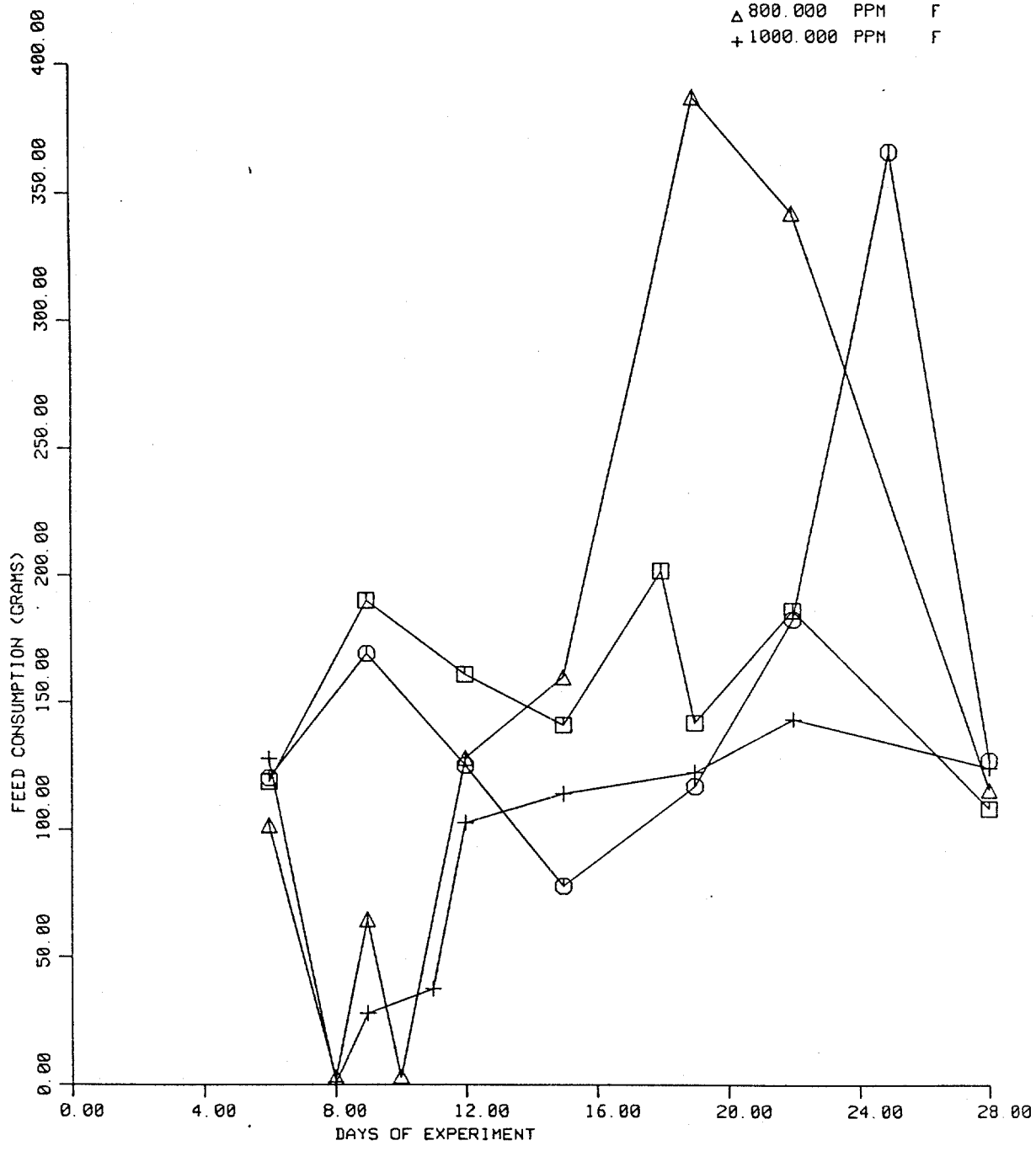

MEAN FOR FEED CONSUMPTION (GRAMS)

EXPERIMENT # 880017T EXPERIMENT START DATE: 11-JUL-88 COMPOUND # 88-0017
SOFTWARE VERS # 3.0
ACCESSION NUMBER 907124

		0.000 PPM GROUP-F	400.000 PPM GROUP-F	800.000 PPM GROUP-F	1000.000 PPM GROUP-F
WEEK #	1				
DAY	6	119.0 A	120.4	101.5	127.7
		44.2 B	12.3	27.7	61.4
		5 C	4	6	3
WEEK #	2				
DAY	8			2.9	1.0
				2.9	0.0
				4	2
DAY	9	190.3	169.5	64.7	27.6 *
		52.1	96.9	84.9	32.7
		6	6	2	3
DAY	11				37.1
					51.7
					2
DAY	12	161.1	125.5 *	128.3	102.6
		27.1	13.8	0.0	0.0
		6	5	1	1
WEEK #	3				
DAY	16	141.1	78.0	160.1	114.3
		48.3	40.5	0.0	0.0
		6	4	1	1
DAY	19	142.2	117.1	388.0	123.0
		85.0	65.5	0.0	0.0
		6	5	1	1
WEEK #	4				
DAY	22	186.8	183.4	343.5	143.7
		107.1	12.9	0.0	0.0
		6	3	1	1
DAY	28	108.7	128.0	116.0	124.9
		44.1	16.5	0.0	0.0
		6	5	1	1

KEY: A = Mean value
B = ± Standard deviation
C = Number of values per group
* = Statistically significant from controls ($p \leq 0.05$), one-way ANOVA

NOTE: Mean values do not include NN or DN values.

INDIVIDUAL ANIMAL FEED CONSUMPTION (GRAMS)

EXPERIMENT # 880017T4 EXPERIMENT START DATE: 11-JUL-88 COMPOUND # 88-0017
SOFTWARE VERS # 3.0
ACCESSION NUMBER 907124

0.000 PPM GROUP-F

ANIMAL #	301	302	303 NN	304	305	306	307
DAY 6	*	110.7	114.8	47.5	139.5	163.5	133.7
DAY 9	288.3	157.0	169.3	138.3	192.7	180.3	185.3
DAY 12	192.8	156.3	168.7	124.0	184.0	136.7	172.7
DAY 15	221.7	136.0	164.3	114.3	149.3	75.7	149.3
DAY 18	202.1						
DAY 19	261.0	149.8	104.3	134.3	125.0	0.7	182.3
DAY 22	315.3	195.3	144.3	147.7	214.3	0.3	248.0
DAY 28	103.4	150.0	153.9	156.0	102.7	33.2	107.2

400.000 PPM GROUP-F

ANIMAL #	308	309	310	311	312	313	314 NB
DAY 6	*	*	109.0	124.7	112.0	135.8	
DAY 9	104.0	363.5	121.0	127.7	141.0	159.7	
DAY 12	137.0	*	103.3	121.0	133.7	132.3	
DAY 15	*	*	67.0	68.7	135.7	40.7	
DAY 19	183.5	*	126.0	107.8	156.2	12.0	
DAY 22	*	*	182.7	*	171.0	196.7	
DAY 25		367.5					
DAY 28	121.7	*	137.4	114.4	152.1	114.2	

800.000 PPM GROUP-F

ANIMAL #	315 DP	316 DP	317 DP	318 DN	319 EP	320	321 DP
DAY 6	68.6	125.5	66.0	137.0	112.3	107.5	129.2
DAY 8	1.5	7.1	2.5	0.5			0.5
DAY 9					4.7	124.7	
DAY 10					3.0		
DAY 12						128.3	
DAY 15						160.1	
DAY 19						388.0	
DAY 22						343.5	
DAY 28						116.0	

1000.000 PPM GROUP-F

ANIMAL #	322 DP	323 DP	324 DP	325 EP	326 EP	327	328 NB
DAY 6	*	*	*	197.7	102.7	82.7	
DAY 8		1.0	1.0				
DAY 9				8.7	8.7	65.3	
DAY 11					0.5	73.7	
DAY 12						102.6	
DAY 15						114.3	
DAY 19						123.0	
DAY 22						143.7	
DAY 28						124.9	

* = FEED SPILLAGE

NOTE: FOR GROUP HOUSED ANIMALS, FEED CONSUMPTION IS DERIVED FROM A COMMON CONTAINER

KEY: NB - NOT BRED, NN - NOT PREGNANT : NEGATIVE STAIN, EP - EUTHANATIZED : PREGNANT
DP - SPONTANEOUS DEATH : PREGNANT, DN - SPONTANEOUS DEATH : NOT PREGNANT

SUMMARY HEMATOLOGY DETERMINATION

EXPERIMENT # 880017T4 EXPERIMENT START DATE: 11-JUL-88 COMPOUND # 88-0017
SOFTWARE VERS # 3.0
ACCESSION NUMBER 907124

ANALYTICAL MATERIAL: BLOOD SAMPLE DAY # 29

	0.000 PPM GROUP-F	400.000 PPM GROUP-F	800.000 PPM GROUP-F	1000.000 PPM GROUP-F
WBC/MM3 X3	4.5	5.7	3.7	4.9
	0.6	3.3	0.0	0.0
	6	6	1	1
RBC/MM3 X6	5.8	6.0	4.6	5.8
	0.3	0.4	0.0	0.0
	6	6	1	1
HB CONC , G/DL	12.1	13.1	10.8	13.3
	0.9	1.1	0.0	0.0
	6	6	1	1
HCT , %	37.0	41.5 *		42.0
	2.4	3.6		0.0
	6	6		1
MCV , U3	64.3	69.3 *		73.0
	2.7	2.3		0.0
	6	6		1
MCH , UUG	20.9	21.9	23.7	23.1
	1.1	1.0	0.0	0.0
	6	6	1	1
MCHC , %	32.6	31.5		31.7
	0.8	0.9		0.0
	6	6		1
PLATELETS/MM3 X3	359.2	400.3	300.0	294.0
	52.1	68.2	0.0	0.0
	6	6	1	1
POLYS , %	34.0	30.7	53.0	49.0
	9.2	9.8	0.0	0.0
	6	6	1	1
BANDS , %	0.0	0.0	0.0	0.0
	0.0	0.0	0.0	0.0
	6	6	1	1
LYMPHOCYTES,%	64.2	67.3	47.0	48.0
	9.5	10.3	0.0	0.0
	6	6	1	1
MONOCYTES,%	0.7	0.8	0.0	1.0
	0.8	1.2	0.0	0.0
	6	6	1	1
EOSINOPHIL,%	0.3	0.2	0.0	0.0
	0.5	0.4	0.0	0.0
	6	6	1	1
BASOPHIL,%	0.8	1.0	0.0	2.0
	0.8	0.6	0.0	0.0
	6	6	1	1
LYMPHOCYTES ATYPICAL, %	0.0	0.0	0.0	0.0
	0.0	0.0	0.0	0.0
	6	6	1	1
NUCLEATED RBC/100WBC	0.0	0.0	0.0	0.0
	0.0	0.0	0.0	0.0
	6	6	1	1

Key: A = Mean value
B = ± Standard deviation
C = Number of values per group
* = Statistically different from controls ($p \leq 0.05$), one-way ANOVA

Means do not include NN values.

INDIVIDUAL ANIMAL HEMATOLOGY DETERMINATION

EXPERIMENT # 880017T4 EXPERIMENT START DATE: 11-JUL-88 COMPOUND # 88-0017
SOFTWARE VERS # 3.0
ACCESSION NUMBER 907124

ANALYTICAL MATERIAL: BLOOD SAMPLE DAY # 29

0.000 PPM GROUP-F

ANIMAL #	301	302	303 NN	304	305	306	307
WBC/MM3 X3	5.4	4.0	7.4	4.1	4.7	4.9	3.7
RBC/MM3 X6	5.5	6.2	6.2	5.5	5.7	5.6	6.0
HB CONC . G/DL	10.5	12.6	12.9	11.8	12.5	12.0	13.0
HCT . %	33.0	39.0	40.0	37.0	37.0	36.0	40.0
MCV . U3	60.0	63.0	64.0	68.0	65.0	64.0	66.0
MCH . UUG	19.0	20.2	20.7	21.5	21.9	21.3	21.5
MCHC . %	31.8	32.3	32.2	31.9	33.8	33.3	32.5
PLATELETS/MM3 X3	388.0	410.0	377.0	357.0	407.0	299.0	294.0
POLYS . %	43.0	29.0	18.0	47.0	23.0	29.0	33.0
BANDS . %	0.0	0.0	0.0	0.0	0.0	0.0	0.0
LYMPHOCYTES,%	54.0	67.0	79.0	52.0	77.0	69.0	66.0
MONOCYTES,%	2.0	1.0	0.0	1.0	0.0	0.0	0.0
EOSINOPHIL,%	0.0	1.0	1.0	0.0	0.0	1.0	0.0
BASOPHIL,%	1.0	2.0	2.0	0.0	0.0	1.0	1.0
LYMPHOCYTES ATYPICAL, %	0.0	0.0	0.0	0.0	0.0	0.0	0.0
NUCLEATED RBC/100WBC	0.0	0.0	0.0	0.0	0.0	0.0	0.0

400.000 PPM GROUP-F

ANIMAL #	308	309	310	311	312	313	314 NB
WBC/MM3 X3	5.9	4.5	3.3	4.3	3.8	12.1	
RBC/MM3 X6	5.4	6.2	5.6	6.0	6.3	6.4	
HB CONC . G/DL	11.8	13.1	12.6	12.9	13.1	15.0	
HCT . %	37.0	41.0	39.0	41.0	44.0	47.0	
MCV . U3	69.0	66.0	70.0	68.0	70.0	73.0	
MCH . UUG	22.0	21.0	22.5	21.5	20.7	23.4	
MCHC . %	31.9	31.9	32.3	31.4	29.8	31.9	
PLATELETS/MM3 X3	363.0	431.0	509.0	319.0	356.0	424.0	
POLYS . %	31.0	33.0	40.0	26.0	40.0	14.0	
BANDS . %	0.0	0.0	0.0	0.0	0.0	0.0	
LYMPHOCYTES,%	66.0	65.0	56.0	74.0	59.0	84.0	
MONOCYTES,%	1.0	0.0	3.0	0.0	0.0	1.0	
EOSINOPHIL,%	0.0	1.0	0.0	0.0	0.0	0.0	
BASOPHIL,%	2.0	1.0	1.0	0.0	1.0	1.0	
LYMPHOCYTES ATYPICAL, %	0.0	0.0	0.0	0.0	0.0	0.0	
NUCLEATED RBC/100WBC	0.0	0.0	0.0	0.0	0.0	0.0	

800.000 PPM GROUP-F

ANIMAL #	315 DP	316 DP	317 DP	318 NN	319 EP	320	321 DP
WBC/MM3 X3						3.7	
RBC/MM3 X6						4.6	
HB CONC . G/DL						10.8	
HCT . %							
MCV . U3							
MCH . UUG						23.7	
MCHC . %							
PLATELETS/MM3 X3						300.0	
POLYS . %						53.0	
BANDS . %						0.0	
LYMPHOCYTES,%						47.0	
MONOCYTES,%						0.0	
EOSINOPHIL,%						0.0	
BASOPHIL,%						0.0	
LYMPHOCYTES ATYPICAL, %						0.0	
NUCLEATED RBC/100WBC						0.0	

KEY: NB = NOT BRED, NN = NOT PREGNANT : NEGATIVE STAIN, DN = SPONTANEOUS DEATH : NOT PREGNANT, DP = SPONTANEOUS DEATH : PREGNANT, EP = EUTHANATIZED : PREGNANT

INDIVIDUAL ANIMAL HEMATOLOGY DETERMINATION

EXPERIMENT # 880017T4 EXPERIMENT START DATE: 11-JUL-88 COMPOUND # 88-0017
SOFTWARE VERS # 3.0
ACCESSION NUMBER 907124

ANALYTICAL MATERIAL: BLOOD SAMPLE DAY # 29

1000.000 PPM GROUP-F

ANIMAL #	322 DP	323 DP	324 DP	325 EP	326 EP	327	328 NB
WBC/MM3 X3						4.9	
RBC/MM3 X6						5.8	
HB CONC . G/DL						13.3	
HCT . %						42.0	
MCV . U3						73.0	
MCH . UUG						23.1	
MCHC . %						31.7	
PLATELETS/MM3 X3						294.0	
POLYS . %						49.0	
BANDS . %						0.0	
LYMPHOCYTES.%						48.0	
MONOCYTES.%						1.0	
EOSINOPHIL.%						0.0	
BASOPHIL.%						2.0	
LYMPHOCYTES ATYPICAL. %						0.0	
NUCLEATED RBC/100WBC						0.0	

KEY: NB = NOT BRED, NN = NOT PREGNANT : NEGATIVE STAIN, DN = SPONTANEOUS DEATH : NOT PREGNANT, DP = SPONTANEOUS DEATH : PREGNANT, EP = EUTHANATIZED : PREGNANT

STUDY SUMMARY OF CELL MORPHOLOGY

EXPERIMENT # 880017T4 EXPERIMENT START DATE: 11-JUL-88 COMPOUND # 88-0017
SOFTWARE VERS # 3.0
ACCESSION NUMBER 907124

ANALYTICAL MATERIAL : BLOOD CELL MORPHOLOGY

DAY OF SAMPLE : 29

GROUP	0.000 PPM F	400.000 PPM F	800.000 PPM F	1000.000 PPM F
BLOOD ERYTHROCYTES	6	6	1	1
BLOOD LEUKOCYTES	6	6	1	1
BLOOD PLATELETS	6	6	1	1

Numbers represent number of tissues examined, or in the case of abnormal findings, the number of tissues with each abnormality.

INDIVIDUAL ANIMAL CELL MORPHOLOGY

EXPERIMENT # 880017T4 EXPERIMENT START DATE: 11-JUL-88 COMPOUND # 88-0017
SOFTWARE VERS # 3.0
ACCESSION NUMBER 907124

ANALYTICAL MATERIAL : BLOOD CELL MORPHOLOGY

DAY OF SAMPLE : 29

0.000 PPM F

ANIMAL #	301	302	303	304	305	306	307
BLOOD ERYTHROCYTES	N	N	NN	N	N	N	N
BLOOD LEUKOCYTES	N	N		N	N	N	N
BLOOD PLATELETS	N	N		N	N	N	N

400.000 PPM F

ANIMAL #	308	309	310	311	312	313	314
BLOOD ERYTHROCYTES	N	N	N	N	N	N	NB
BLOOD LEUKOCYTES	N	N	N	N	N	N	
BLOOD PLATELETS	N	N	N	N	N	N	

800.000 PPM F

ANIMAL #	315	316	317	318	319	320	321
BLOOD ERYTHROCYTES	DP	DP	DP	DN	EP	N	DP
BLOOD LEUKOCYTES						N	
BLOOD PLATELETS						N	

1000.000 PPM F

ANIMAL #	322	323	324	325	326	327	328
BLOOD ERYTHROCYTES	DP	DP	DP	EP	EP	N	NB
BLOOD LEUKOCYTES						N	
BLOOD PLATELETS						N	

KEY:N-NORMAL,1-MINIMAL,2-MINOR,3-MODERATE,4-SEVERE,P-PRESENT,A-ABSENT

KEY: NB = NOT BRED, NN = NOT PREGNANT : NEGATIVE STAIN, DN = SPONTANEOUS DEATH : NOT PREGNANT, DP = SPONTANEOUS DEATH : PREGNANT, EP = EUTHANATIZED : PREGNANT

MEAN TERMINAL ORGAN WEIGHTS AND BODY WEIGHTS

EXPERIMENT # 880017T4 EXPERIMENT START DATE: 11-JUL-88 COMPOUND # 88-0017
SOFTWARE VERS # 3.0
ACCESSION NUMBER 907124

GROUP		0.000 PPM F	400.000 PPM F	800.000 PPM F	1000.000 PPM F
BODY WEIGHT	(G)	3424.2 A	3466.2	3298.7	3103.1
		321.3 B	304.5	0.0	0.0
		6 C	6	1	1
KIDNEYS	(G)	15.8000	17.2333	16.8000	16.2000
		0.6033	1.8305	0.0000	0.0000
		6	6	1	1
	%	0.4651	0.4999	0.5093	0.5221
		0.0513	0.0657	0.0000	0.0000
		6	6	1	1
LIVER	(G)	86.0833	75.2500	78.5000	64.8000
		20.7391	14.4532	0.0000	0.0000
		6	6	1	1
	%	2.5144	2.1863	2.3797	2.0882
		0.5766	0.4923	0.0000	0.0000
		6	6	1	1
THYMUS	(G)	3.3667	3.0167	6.0000	1.5000
		1.2801	1.5715	0.0000	0.0000
		6	6	1	1
	%	0.0979	0.0872	0.1819	0.0483
		0.0342	0.0457	0.0000	0.0000
		6	6	1	1
SPLEEN	(G)	1.7333	1.6000	1.1000	1.5000
		0.4412	0.4690	0.0000	0.0000
		6	6	1	1
	%	0.0518	0.0458	0.0333	0.0483
		0.0185	0.0115	0.0000	0.0000
		6	6	1	1

KEY: A = Mean value
B = ± Standard deviation
C = Number of values per group

NOTE: Body weight is corrected body weight
Mean value do not include NN, DP, DN, and EP values.

INDIVIDUAL ANIMAL ORGAN WEIGHTS AND TERMINAL BODY WEIGHT

EXPERIMENT # 880017T4 EXPERIMENT START DATE: 11-JUL-88 COMPOUND # 88-0017
SOFTWARE VERS # 3.0
ACCESSION NUMBER 907124

0.000 PPM GROUP - F

ANIMAL #		301	302	303 NN	304	305	306	307
BODY WEIGHT	(G)	3410.5	3779.0	3454.0	2845.2	3640.9	3372.9	3496.6
KIDNEYS	(G)	15.4000	16.7000	13.6000	16.2000	16.0000	15.1000	15.4000
	%	0.4515	0.4419	0.3937	0.5694	0.4395	0.4477	0.4404
LIVER	(G)	122.5000	83.8000	58.4000	60.8000	79.7000	93.1000	76.7000
	%	3.5918	2.2175	1.6908	2.1369	2.1890	2.7602	2.1907
THYMUS	(G)	2.1000	4.8000	3.0000	2.4000	2.3000	4.9000	3.7000
	%	0.0616	0.1270	0.0869	0.0844	0.0632	0.1453	0.1058
SPLEEN	(G)	1.5000	1.9000	1.8000	2.5000	1.4000	1.3000	1.8000
	%	0.0440	0.0503	0.0521	0.0879	0.0385	0.0385	0.0515

400.000 PPM GROUP - F

ANIMAL #		308	309	310	311	312	313	314 NB
BODY WEIGHT	(G)	3452.2	3378.3	3016.8	3708.3	3349.2	3892.3	
KIDNEYS	(G)	16.4000	19.8000	17.4000	16.2000	14.8000	18.8000	
	%	0.4751	0.5861	0.5768	0.4369	0.4419	0.4830	
LIVER	(G)	60.4000	64.4000	93.5000	74.4000	66.4000	92.4000	
	%	1.7496	1.9063	3.0993	2.0063	1.9826	2.3739	
THYMUS	(G)	1.0000	5.5000	2.7000	4.0000	2.0000	2.9000	
	%	0.0290	0.1628	0.0895	0.1079	0.0597	0.0745	
SPLEEN	(G)	1.7000	1.4000	0.9000	1.4000	2.0000	2.2000	
	%	0.0492	0.0414	0.0298	0.0378	0.0597	0.0565	

800.000 PPM GROUP - F

ANIMAL #		315 DP	316 DP	317 DP	318 DN	319 EP	320	321 DP
BODY WEIGHT	(G)						3298.7	
KIDNEYS	(G)						16.8000	
	%						0.5093	
LIVER	(G)						78.5000	
	%						2.3797	
THYMUS	(G)						6.0000	
	%						0.1819	
SPLEEN	(G)						1.1000	
	%						0.0333	

1000.000 PPM GROUP - F

ANIMAL #		322 DP	323 DP	324 DP	325 EP	326 EP	327	328 NB
BODY WEIGHT	(G)						3103.1	
KIDNEYS	(G)						16.2000	
	%						0.5221	
LIVER	(G)						64.8000	
	%						2.0882	
THYMUS	(G)						1.5000	
	%						0.0483	
SPLEEN	(G)						1.5000	
	%						0.0483	

NOTE: BODY WEIGHT IS CORRECTED BODY WEIGHT

KEY: NB - NOT BRED, NN - NOT PREGNANT : NEGATIVE STAIN, EP - EUTHANATIZED : PREGNANT
DP - SPONTANEOUS DEATH : PREGNANT, DN - SPONTANEOUS DEATH : NOT PREGNANT

Study No. 88-0017T4
Acc. No. 907124

PATHOLOGY REPORT

Compound: Ethylene Glycol Monopropyl Ether

Pregnant female rabbits exposed to 0, 400, 800 or 1000 ppm of the test material for six hours per day on Day 6 through 18 of gestation, as part of a developmental toxicity study, were necropsied. Necropsy results are listed in computer-generated tables.

The cause of death for rabbits which died after exposure to the test material was not determined.

GROSS PATHOLOGY

1000 ppm dose group: Treatment-related changes in five rabbits which either died or were euthanatized in extrimis on Days 7, 8, 9 or 10 included pallor of the myocardium (2/5), kidney cortex (1/5), skeletal muscles (2/5), and skin (1/5); hemorrhage in the glandular gastric mucosa (1/5); red discoloration of the urine in the urinary bladder (5/5); vaginal hematoma (5/5); small (2/5) and dark (3/5) spleens; and small liver (2/5) and thymus (1/5). No treatment-related changes were observed in one rabbit which survived the 29-day observation period.

800 ppm dose group: Treatment-related changes in six rabbits which either died or were euthanatized in extrimis on Days 8 and 10 included pallor of the myocardium (4/6), kidney cortex (1/6), skeletal muscles (1/6) and skin (1/6); hemorrhage in the glandular gastric mucosa (1/6); red discoloration of the urine in the urinary bladder (5/6); vaginal hematomas (6/6); small liver (1/6); dark spleens (4/6); and red discoloration of the hair of the nose (1/6). No treatment-related changes were observed in one rabbit which survived the 29-day observation period.

400 ppm dose group: No treatment-related changes were observed. All rabbits survived the 29-day observation period.

All other lesions listed in the attached tables were not considered treatment-related. No tissue was processed for microscopic evaluation.

Milan S. Vlaovic 6/12/89

Milan S. Vlaovic, D.V.M., Ph.D.

MSV:cpp
03/10/89

4463T

SUMMARY GROSS PATHOLOGY INCIDENCE TABLE

EXPERIMENT # 880017T4 EXPERIMENT START DATE: 11-JUL-88 COMPOUND # 88-0017
SOFTWARE VERS # 3.0
ACCESSION NUMBER 907124

GROUP	0.000 PPM F	400.000 PPM F	800.000 PPM F	1000.000 PPM F
TRACHEA	7	6	7	6
LUNGS	7	6	7	6
HEART	7	6	7	6
MYOCARDIUM				
PALLOR	0	0	4	2
ESOPHAGUS	7	6	7	6
STOMACH	7	6	7	6
STOMACH, GLANDULAR				
HEMORRHAGE	0	0	1	1
DUODENUM	7	6	7	6
JEJUNUM	7	6	7	6
ILEUM	7	6	7	6
CECUM	7	6	7	6
COLON	7	6	7	6
URINARY BLADDER	7	6	7	6
DISTENTION	0	0	1	2
URINE				
DISCOLORATION,RED	0	0	5	5
PANCREAS, NOS	7	6	7	6
MESENTERIC LYMPH NODES	7	6	7	6
ADRENALS	7	6	7	6
OVARIES	7	6	7	6
FALLOPIAN TUBES	7	6	7	6
UTERUS	7	6	7	6
VAGINA	7	6	7	6
HEMATOMA	0	0	6	5
KIDNEYS	7	6	7	6
CORTEX OF KIDNEY				
PALLOR	0	0	1	1
LIVER	7	6	7	6
PALLOR	4	3	7	4
SMALL	0	0	1	2
THYMUS	7	6	7	6
SMALL	0	0	0	1
SPLEEN	7	6	7	6
COLOR-DARKER THAN NORMAL	0	0	4	3
ACCESSORY STRUCTURE	0	0	1	1
SMALL	0	0	0	2
HAIR	0	0	1	0
NARES				
DISCOLORATION,RED	0	0	1	0

Numbers represent number of tissues examined, or in the case of abnormal findings, the number of tissues with each abnormality.

SUMMARY GROSS PATHOLOGY INCIDENCE TABLE

EXPERIMENT # 880017T4 EXPERIMENT START DATE: 11-JUL-88 COMPOUND # 88-0017
SOFTWARE VERS # 3.0
ACCESSION NUMBER 907124

GROUP	0.000 PPM F	400.000 PPM F	800.000 PPM F	1000.000 PPM F
SKELETAL MUSCLE	0	0	1	2
PALLOR	0	0	1	2
SKIN, NOS	0	0	1	1
PALLOR	0	0	1	1

Numbers represent number of tissues examined, or in the case of abnormal findings, the number of tissues with each abnormality.

INDIVIDUAL ANIMAL GROSS PATHOLOGY INCIDENCE TABLE

EXPERIMENT # 880017T4 EXPERIMENT START DATE: 11-JUL-88 COMPOUND # 88-0017
SOFTWARE VERS # 3.0
ACCESSION NUMBER 907124

0.000 PPM GROUP - F

ANIMAL #	301	302	303 NN	304	305	306	307
DAYS ON TEST	29	29	29	29	29	29	29
TRACHEA	X	X	X	X	X	X	X
LUNGS	X	X	X	X	X	X	X
HEART	X	X	X	X	X	X	X
ESOPHAGUS	X	X	X	X	X	X	X
STOMACH	X	X	X	X	X	X	X
DUODENUM	X	X	X	X	X	X	X
JEJUNUM	X	X	X	X	X	X	X
ILEUM	X	X	X	X	X	X	X
CECUM	X	X	X	X	X	X	X
COLON	X	X	X	X	X	X	X
URINARY BLADDER	X	X	X	X	X	X	X
PANCREAS, NOS	X	X	X	X	X	X	X
MESENTERIC LYMPH NODES	X	X	X	X	X	X	X
ADRENALS	X	X	X	X	X	X	X
OVARIES	X	X	X	X	X	X	X
FALLOPIAN TUBES	X	X	X	X	X	X	X
UTERUS	X	X	X	X	X	X	X
VAGINA	X	X	X	X	X	X	X
KIDNEYS	N	N	N	N	N	N	N
*LIVER PALLOR	3	N	N	N	2	2	2
THYMUS	N	N	N	N	N	N	N
SPLEEN	N	N	N	N	N	N	N

NOTE: NB - NOT BRED, NN - NOT PREGNANT : NEGATIVE STAIN, DP - SPONTANEOUS DEATH : PREGNANT
EP - EUTHANATIZED : PREGNANT, DN - SPONTANEOUS DEATH : NOT PREGNANT

KEY:N-NORMAL AND TISSUE COLLECTED FOR HISTOPATHOLOGY,1-MINIMAL,2-MINOR,3-MODERATE,4-SEVERE
P-PRESENT,A-ABSENT,*-SEE COMMENT REPORT (FORM #2), X=NORMAL BUT NOT COLLECTE

INDIVIDUAL ANIMAL GROSS PATHOLOGY INCIDENCE TABLE

EXPERIMENT # 880017T4 EXPERIMENT START DATE: 11-JUL-88 COMPOUND # 88-0017
SOFTWARE VERS # 3.0
ACCESSION NUMBER 907124

400.000 PPM GROUP - F

ANIMAL #	308	309	310	311	312	313	314 NB
DAYS ON TEST	29	29	29	29	29	29	
TRACHEA	X	X	X	X	X	X	
LUNGS	X	X	X	X	X	X	
HEART	X	X	X	X	X	X	
ESOPHAGUS	X	X	X	X	X	X	
STOMACH	X	X	X	X	X	X	
DUODENUM	X	X	X	X	X	X	
JEJUNUM	X	X	X	X	X	X	
ILEUM	X	X	X	X	X	X	
CECUM	X	X	X	X	X	X	
COLON	X	X	X	X	X	X	
URINARY BLADDER	X	X	X	X	X	X	
PANCREAS, NOS	X	X	X	X	X	X	
MESENTERIC LYMPH NODES	X	X	X	X	X	X	
ADRENALS	X	X	X	X	X	X	
OVARIES	X	X	X	X	X	X	
FALLOPIAN TUBES	X	X	X	X	X	X	
UTERUS	X	X	X	X	X	X	
VAGINA	X	X	X	X	X	X	
KIDNEYS	N	N	N	N	N	N	
*LIVER	N	N			N		
PALLOR			3	1		3	
THYMUS	N	N	N	N	N	N	
SPLEEN	N	N	N	N	N	N	

NOTE: NB - NOT BRED, NN - NOT PREGNANT : NEGATIVE STAIN, DP - SPONTANEOUS DEATH : PREGNANT
EP - EUTHANATIZED : PREGNANT, DN - SPONTANEOUS DEATH : NOT PREGNANT

KEY:N-NORMAL AND TISSUE COLLECTED FOR HISTOPATHOLOGY,1-MINIMAL,2-MINOR,3-MODERATE,4-SEVERE
P-PRESENT,A-ABSENT,*-SEE COMMENT REPORT (FORM #2), X=NORMAL BUT NOT COLLECTED

INDIVIDUAL ANIMAL GROSS PATHOLOGY INCIDENCE TABLE

EXPERIMENT # 880017T4 EXPERIMENT START DATE: 11-JUL-88 COMPOUND # 88-0017
SOFTWARE VERS # 3.0
ACCESSION NUMBER 907124

800.000 PPM GROUP - F

ANIMAL #	315 DP	316 DP	317 DP	318 DN	319 EP	320	321 DP
DAYS ON TEST	8	8	8	8	10	29	8
TRACHEA	X	X	X	X	X	X	X
LUNGS	X	X	X	X	X	X	X
HEART	X		X			X	
MYOCARDIUM PALLOR		2		2	3		2
ESOPHAGUS	X	X	X	X	X	X	X
STOMACH	X	X	X	X		X	X
STOMACH, GLANDULAR HEMORRHAGE					2		
DUODENUM	X	X	X	X	X	X	X
JEJUNUM	X	X	X	X	X	X	X
ILEUM	X	X	X	X	X	X	X
CECUM	X	X	X	X	X	X	X
COLON	X	X	X	X	X	X	X
*URINARY BLADDER						X	X
DISTENTION					3		
URINE DISCOLORATION,RED	3	3	3	3	3		
PANCREAS, NOS	X	X	X	X	X	X	X
MESENTERIC LYMPH NODES	X	X	X	X	X	X	X
ADRENALS	X	X	X	X	X	X	X
OVARIES	X	X	X	X	X	X	X
FALLOPIAN TUBES	X	X	X	X	X	X	X
UTERUS	X	X	X	X	X	X	X
*VAGINA						X	
HEMATOMA	3	1	3	3	2		3

NOTE: NB - NOT BRED, NN - NOT PREGNANT : NEGATIVE STAIN, DP - SPONTANEOUS DEATH : PREGNANT
EP - EUTHANATIZED : PREGNANT, DN - SPONTANEOUS DEATH : NOT PREGNANT

KEY:N-NORMAL AND TISSUE COLLECTED FOR HISTOPATHOLOGY,1-MINIMAL,2-MINOR,3-MODERATE,4-SEVERE
P-PRESENT,A-ABSENT,*-SEE COMMENT REPORT (FORM #2), X=NORMAL BUT NOT COLLECTED

INDIVIDUAL ANIMAL GROSS PATHOLOGY INCIDENCE TABLE

EXPERIMENT # 880017T4 EXPERIMENT START DATE: 11-JUL-88 COMPOUND # 88-0017
SOFTWARE VERS # 3.0
ACCESSION NUMBER 907124

800.000 PPM GROUP - F

ANIMAL #	315 DP	316 DP	317 DP	318 DN	319 EP	320	321 DP
DAYS ON TEST	8	8	8	8	10	29	8
KIDNEYS	N	N	N	N		N	N
CORTEX OF KIDNEY							
PALLOR					2		
LIVER							
PALLOR	3	2	2	3	3	2	2
SMALL					2		
THYMUS	N	N	N	N	N	N	N
SPLEEN					N	N	
COLOR-DARKER THAN NORMAL	3	3	3				3
ACCESSORY STRUCTURE				P			
*HAIR							
NARES							
DISCOLORATION,RED		1					
SKELETAL MUSCLE							
PALLOR					3		
*SKIN, NOS							
PALLOR					3		

NOTE: NB - NOT BRED, NN - NOT PREGNANT : NEGATIVE STAIN, DP - SPONTANEOUS DEATH : PREGNANT
EP - EUTHANATIZED : PREGNANT, DN - SPONTANEOUS DEATH : NOT PREGNANT

KEY:N-NORMAL AND TISSUE COLLECTED FOR HISTOPATHOLOGY,1-MINIMAL,2-MINOR,3-MODERATE,4-SEVERE
P-PRESENT,A-ABSENT,*-SEE COMMENT REPORT (FORM #2), X=NORMAL BUT NOT COLLECTED

INDIVIDUAL ANIMAL GROSS PATHOLOGY INCIDENCE TABLE

EXPERIMENT # 880017T4 EXPERIMENT START DATE: 11-JUL-88 COMPOUND # 88-0017
SOFTWARE VERS # 3.0
ACCESSION NUMBER 907124

1000.000 PPM GROUP - F

ANIMAL #	322 DP	323 DP	324 DP	325 EP	326 EP	327	328 NB
DAYS ON TEST	7	8	8	9	10	29	
TRACHEA	X	X	X	X	X	X	
LUNGS	X	X	X	X	X	X	
HEART	X	X	X			X	
MYOCARDIUM PALLOR				3	3		
ESOPHAGUS	X	X	X	X	X	X	
STOMACH	X		X	X	X	X	
STOMACH, GLANDULAR HEMORRHAGE		2					
DUODENUM	X	X	X	X	X	X	
JEJUNUM	X	X	X	X	X	X	
ILEUM	X	X	X	X	X	X	
CECUM	X	X	X	X	X	X	
COLON	X	X	X	X	X	X	
*URINARY BLADDER						X	
DISTENTION				4	3		
URINE DISCOLORATION,RED	3	4	3	3	3		
PANCREAS, NOS	X	X	X	X	X	X	
MESENTERIC LYMPH NODES	X	X	X	X	X	X	
ADRENALS	X	X	X	X	X	X	
OVARIES	X	X	X	X	X	X	
FALLOPIAN TUBES	X	X	X	X	X	X	
UTERUS	X	X	X	X	X	X	
*VAGINA						X	
HEMATOMA	4	2	1	2	2		

NOTE: NB - NOT BRED, NN - NOT PREGNANT : NEGATIVE STAIN, DP - SPONTANEOUS DEATH : PREGNANT
EP - EUTHANATIZED : PREGNANT, DN - SPONTANEOUS DEATH : NOT PREGNANT

KEY:N-NORMAL AND TISSUE COLLECTED FOR HISTOPATHOLOGY,1-MINIMAL,2-MINOR,3-MODERATE,4-SEVERE
P-PRESENT,A-ABSENT,*-SEE COMMENT REPORT (FORM #2), X=NORMAL BUT NOT COLLECTED

INDIVIDUAL ANIMAL GROSS PATHOLOGY INCIDENCE TABLE

EXPERIMENT # 880017T4 EXPERIMENT START DATE: 11-JUL-88 COMPOUND # 88-0017
SOFTWARE VERS # 3.0
ACCESSION NUMBER 907124

1000.000 PPM GROUP - F

ANIMAL #	322 DP	323 DP	324 DP	325 EP	326 EP	327	328 NB
DAYS ON TEST	7	8	8	9	10	29	
KIDNEYS	N	N	N	N		N	
CORTEX OF KIDNEY PALLOR					2		
LIVER						N	
PALLOR	3	4	2	2			
SMALL		2			2		
THYMUS	N	N	N	N		N	
SMALL					3		
SPLEEN	N					N	
SMALL		3			3		
COLOR-DARKER THAN NORMAL			3	3	2		
ACCESSORY STRUCTURE				P			
SKELETAL MUSCLE							
PALLOR				3	3		
*SKIN, NOS							
PALLOR					3		

NOTE: NB - NOT BRED, NN - NOT PREGNANT : NEGATIVE STAIN, DP - SPONTANEOUS DEATH : PREGNANT
EP - EUTHANATIZED : PREGNANT, DN - SPONTANEOUS DEATH : NOT PREGNANT

KEY:N-NORMAL AND TISSUE COLLECTED FOR HISTOPATHOLOGY,1-MINIMAL,2-MINOR,3-MODERATE,4-SEVERE
P-PRESENT,A-ABSENT,*-SEE COMMENT REPORT (FORM #2), X=NORMAL BUT NOT COLLECTED

GROSS PATHOLOGY COMMENT REPORT

EXPERIMENT # 880017T4 EXPERIMENT START DATE: 11-JUL-88 COMPOUND # 88-0017
SOFTWARE VERS # 3.0
ACCESSION NUMBER 907124

DAY	DOSE LEVEL	ANIMAL #	COMMENT
28	1000.000 PPM	322	VAGINA - BLOOD CLOT IN THE LUMEN
28	800.000 PPM	315	VAGINA - BLOOD CLOT IN THE LUMEN
28	800.000 PPM	316	HAIR OF NOSE BLOOD STAINED.
28	800.000 PPM	317	VAGINA - BLOOD CLOT IN THE LUMEN
28	800.000 PPM	318	VAGINAL WALL - HEMATOMA
28	800.000 PPM	321	VAGINAL WALL - HEMATOMA
28	1000.000 PPM	323	VAGINA - BLOOD CLOT IN THE LUMEN
28	1000.000 PPM	324	VAGINA - BLOOD CLOT IN THE LUMEN
28	1000.000 PPM	325	URINARY BLADDER - DISTENDED, ALMOST REACHES DIAPHRAGM
28	1000.000 PPM	325	VAGINAL WALL HEMATOMA.
28	800.000 PPM	319	URINARY BLADDER - REDDISH PRECIPITATE PRESENT.
28	800.000 PPM	319	VAGINAL WALL - HEMATOMA
28	800.000 PPM	319	MUCOUS MEMBRANES - ALL PALE
28	1000.000 PPM	326	MUCOUS MEMBRANES - ALL PALE
28	1000.000 PPM	326	VAGINAL WALL HEMATOMA.
29	0.000 PPM	301	LIVER - UNIFORM FATTY INFILTRATION
29	400.000 PPM	310	LIVER - UNIFORM FATTY INFILTRATION

Table - 1 -

SUMMARY OF OBSERVATIONS AT TIME OF CESARIAN SECTION

Exposure Concentration (ppm)	0	400	800	1000
Number Females Mated	7	6	7	6
Number Females Pregnant (%)	6(85)	6(100)	6(85)	6(100)
Pregnancies Aborted	0	0	0	0
Premature Births	0	0	0	0
Dead Females	0	0	5	5
Litters with Viable Fetuses	6	6	1	1
Litters Completely Resorbed	0	0	0	0
Number Corpora Lutea	54	57	12	8
Mean ± SD	9.0 ±2.8	9.5 ± 2.3	12.0 ± 0	8.0 ± 0
Number Implantations	49	55	11	8
Mean ± SD	8.2 ± 2.5	9.2 ± 1.7	11.0 ± 0	8.0 ±0
% Pre-Implantation loss[a]	8.3 ±9.8	4.1 ±6.6	8.3 ±0	0.0 ±0
Number Viable Fetuses	46	48	11	7
Mean ± SD	7.7 ±2.4	8.0 ±1.4	11.0 ±0	7.0 ±0
Number Resorptions	3	7	0	1
Mean ± SD	0.5 ±0.5	1.2 ±2.0	0.0 ±0	1.0 ±0
Number Dead Fetuses	0	0	0	0
% Post Implantation Loss[b]	6.2 ±7.1	10.6 ±18.6	0.0 ±0	12.5 ±0
Mean Fetal Body Weight (g)[c]	40.14 ±6.04	38.84 ±4.87	36.82 ±0	43.82 ±0
Gravid Uterine Weight (g)[d]	424.8 ±78.9	455.0 ±87.7	563.3 ±0	493.9 ±0
Corrected Body Weight (g)[e]	3424 ±321	3466 ±304	3298 ±0	3103 ±0

[a] $\frac{\text{(no. corpora lutea - no. implantations) x 100}}{\text{no. corpora lutea}}$ calculated for each litter and averaged

[b] $\frac{\text{(no. implantations - no. viable fetuses) x 100}}{\text{no. implantations}}$ calculated for each litter and averaged

[c] Mean of the litter means ± 1 standard deviation

[d] Mean ± 1 standard deviation

[e] Mean ± 1 standard deviation of the terminal body weights minus the gravid uterine weight

INDIVIDUAL FEMALE DATA COLLECTED AT CESARIAN SECTION

HAEL NO. 88-0017 ACCESSION NO. 907124 EXPERIMENT NO. 880017T4

START DATE: 11-JUL-88 ROUTE: INHALATION DOSE: CONTROL REPORT DATE: 24-JAN-89

DAM'S NUMBER STUDY	EAR TAG	PREGNANT STATUS	GRAVID UTERINE WEIGHT (g)	CORPORA LUTEA LEFT	RIGHT	IMPLANTATIONS LEFT	RIGHT	COMMENT
301	G6549	PF	445.50	3	9	2	8	
302	G6546	PF	421.00	4	3	4	3	
303	G6547	NN	-------	-	-	-	-	
304	G6537	PF	528.80	5	7	5	7	
305	G6558	PF	456.10	5	4	4	4	
306	G6554	PF	288.10	2	3	2	3	
307	G6555	PF	409.40	5	4	4	3	

KEY: NB - NOT BRED, NN - NOT PREGNANT : NEGATIVE STAIN, EP - EUTHANATIZED : PREGNANT, DP - SPONTANEOUS DEATH : PREGNANT, PF - PREGNANT : FULL TERM, DN - SPONTANEOUS DEATH : NOT PREGNANT

INDIVIDUAL FEMALE DATA COLLECTED AT CESARIAN SECTION

HAEL NO. 88-0017 ACCESSION NO. 907124 EXPERIMENT NO. 880017T4

START DATE: 11-JUL-88 ROUTE: INHALATION DOSE: 400.00 PPM REPORT DATE: 24-JAN-89

DAM'S STUDY	NUMBER EAR TAG	PREGNANT STATUS	GRAVID UTERINE WEIGHT (g)	CORPORA LUTEA LEFT	CORPORA LUTEA RIGHT	IMPLANTATIONS LEFT	IMPLANTATIONS RIGHT	COMMENT
308	G6542	PF	390.80	6	4	5	6	
309	G6540	PF	459.70	3	4	3	4	
310	G6548	PF	363.20	5	3	5	3	
311	G6534	PF	538.70	6	5	5	5	
312	G6551	PF	579.80	5	3	5	3	
313	G6557	PF	397.70	4	9	3	8	
314		NB	------	-	-	-	-	

KEY: NB - NOT BRED, NN - NOT PREGNANT : NEGATIVE STAIN, EP - EUTHANATIZED : PREGNANT, DP - SPONTANEOUS DEATH : PREGNANT, PF - PREGNANT : FULL TERM, DN - SPONTANEOUS DEATH : NOT PREGNANT

INDIVIDUAL FEMALE DATA COLLECTED AT CESARIAN SECTION

HAEL NO. 88-0017 ACCESSION NO. 907124 EXPERIMENT NO. 880017T4

START DATE: 11-JUL-88 ROUTE: INHALATION DOSE: 800.00 PPM REPORT DATE: 24-JAN-89

DAM'S STUDY	NUMBER EAR TAG	PREGNANT STATUS	GRAVID UTERINE WEIGHT (g)	CORPORA LUTEA LEFT	CORPORA LUTEA RIGHT	IMPLANTATIONS LEFT	IMPLANTATIONS RIGHT	COMMENT
315	G6544	DP	------	-	-	-	-	10 Implantation sites and 10 corpora lutea present*
316	G6541	DP	------	-	-	-	-	11 Implantation sites and 11 corpora lutea present*
317	G6533	DP	------	-	-	-	-	10 Implantation sites and 10 corpora lutea present*
318	G6556	DN	------	-	-	-	-	No implantation sites present Sulfide stain negative, 10 corpora lutea
319	G6529	EP	------	-	-	-	-	8 Implantation sites and 8 corpora lutea present*
320	G6532	PF	563.30	7	5	7	4	
321	G6552	DP	------	-	-	-	-	12 Implantation sites and 12 corpora lutea present*

* All sites contained embryos that appeared to be developing normally.

KEY: NB - NOT BRED, NN - NOT PREGNANT : NEGATIVE STAIN, EP - EUTHANATIZED : PREGNANT, DP - SPONTANEOUS DEATH : PREGNANT, PF - PREGNANT : FULL TERM, DN - SPONTANEOUS DEATH : NOT PREGNANT

INDIVIDUAL FEMALE DATA COLLECTED AT CESARIAN SECTION

HAEL NO. 88-0017 ACCESSION NO. 907124 EXPERIMENT NO. 880017T4

START DATE: 11-JUL-88 ROUTE: INHALATION DOSE: 1000.00 PPM REPORT DATE: 24-JAN-89

DAM'S NUMBER STUDY	EAR TAG	PREGNANT STATUS	GRAVID UTERINE WEIGHT (g)	CORPORA LUTEA LEFT	RIGHT	IMPLANTATIONS LEFT	RIGHT	COMMENT
322	G6539	DP	------	-	-	-	-	7 Implantation sites and 8 corpora lutea present*
323	G6550	DP	------	-	-	-	-	7 Implantation sites and 7 corpora lutea present*
324	G6538	DP	------	-	-	-	-	10 Implantation sites and 10 corpora lutea present*
325	G6530	EP	------	-	-	-	-	9 Implantation sites and 11 corpora lutea present*
326	G6536	EP	------	-	-	-	-	9 Implantation sites and 9 corpora lutea present*
327	G6553	PF	493.90	4	4	4	4	
328		NB	------	-	-	-	-	

* All sites contained embryos that appeared to be developing normally.

KEY: NB - NOT BRED, NN - NOT PREGNANT : NEGATIVE STAIN, EP - EUTHANATIZED : PREGNANT, DP - SPONTANEOUS DEATH : PREGNANT, PF - PREGNANT : FULL TERM, DN - SPONTANEOUS DEATH : NOT PREGNANT

INDIVIDUAL LITTER DATA COLLECTED AT CESARIAN SECTION

HAEL NO. 88-0017 ACCESSION NO. 907124 EXPERIMENT NO. 880017T4

START DATE: 11-JUL-88 ROUTE: INHALATION DOSE: CONTROL REPORT DATE: 27-OCT-88

DAM'S STUDY	NUMBER EAR TAG	NUMBER CORPORA LUTEA	IMPLANTATIONS NO.	VIABLE FETUSES NO.	RESORPTIONS EARLY NO.	RESORPTIONS LATE NO.	DEAD FETUSES NO.	POST IMPLANTATION LOSS NO.	SEX NO. MALES	SEX NO. FEMALES	SEX M:F RATIO	MEAN FETAL BODY WEIGHT (g) MALE	MEAN FETAL BODY WEIGHT (g) FEMALE	MEAN FETAL BODY WEIGHT (g) M & F	GRAVID UTERINE WT. GRAMS	CORRECTED BODY WT. (g)
301	G6549	12	10	10	0	0	0	0	-	-	-:-	--	--	32.53	445.50	3410.50
302	G6546	7	7	6	1	0	0	1	-	-	-:-	--	--	48.99	421.00	3779.00
303	G6547	NOT PREGNANT - NEGATIVE STAIN			-	-		-	-	-	-:-	--	--	-----	------	-------
304	G6537	12	12	11	1	0	0	1	-	-	-:-	--	--	34.80	528.80	2845.20
305	G6558	9	8	8	0	0	0	0	-	-	-:-	--	--	40.37	456.10	3640.90
306	G6554	5	5	5	0	0	0	0	-	-	-:-	--	--	39.84	288.10	3372.90
307	G6555	9	7	6	1	0	0	1	-	-	-:-	--	--	44.33	409.40	3496.60
	MEAN	9.0	8.2	7.7	0.5	0.0	0.0	0.5	-	-	-:-	--	--	40.14	424.82	3424.18
	SD	2.8	2.5	2.4	0.5	0.0	0.0	0.5	-	-		--	--	6.04	78.95	321.29

INDIVIDUAL LITTER DATA COLLECTED AT CESARIAN SECTION

HAEL NO. 88-0017 ACCESSION NO. 907124 EXPERIMENT NO. 880017T4

START DATE: 11-JUL-88 ROUTE: INHALATION DOSE: 400.00 PPM REPORT DATE: 27-OCT-88

DAM'S STUDY	NUMBER EAR TAG	NUMBER CORPORA LUTEA	IMPLANTATIONS NO.	VIABLE FETUSES NO.	RESORPTIONS EARLY NO.	RESORPTIONS LATE NO.	DEAD FETUSES NO.	POST IMPLANTATION LOSS NO.	SEX NO. MALES	SEX NO. FEMALES	SEX M:F RATIO	MEAN FETAL BODY WEIGHT (g) MALE	MEAN FETAL BODY WEIGHT (g) FEMALE	MEAN FETAL BODY WEIGHT (g) M & F	GRAVID UTERINE WT. GRAMS	CORRECTED BODY WT. (g)
308	G6542	10	11	6	5	0	0	5	-	-	-:-	--	--	42.43	390.80	3452.20
309	G6540	7	7	7	0	0	0	0	-	-	-:-	--	--	44.25	459.70	3378.30
310	G6548	8	8	8	0	0	0	0	-	-	-:-	--	--	30.63	363.20	3016.80
311	G6534	11	10	10	0	0	0	0	-	-	-:-	--	--	37.48	538.70	3708.30
312	G6551	8	8	8	0	0	0	0	-	-	-:-	--	--	47.25	579.80	3349.20
313	G6557	13	11	9	2	0	0	2	-	-	-:-	--	--	31.03	397.70	3892.30
314		NOT BRED	-	-	-	-	-	-	-	-	-:-	--	--	-----	------	-------
	MEAN	9.5	9.2	8.0	1.2	0.0	0.0	1.2	-	-	-:-	--	--	38.84	454.98	3466.18
	SD	2.3	1.7	1.4	2.0	0.0	0.0	2.0	-	-		--	--	6.98	87.68	304.55

INDIVIDUAL LITTER DATA COLLECTED AT CESARIAN SECTION

HAEL NO. 88-0017 ACCESSION NO. 907124 EXPERIMENT NO. 880017T4

START DATE: 11-JUL-88 ROUTE: INHALATION DOSE: 800.00 PPM REPORT DATE: 27-OCT-88

DAM'S STUDY	NUMBER EAR TAG	NUMBER CORPORA LUTEA	IMPLAN-TATIONS NO.	VIABLE FETUSES NO.	RESORPTIONS EARLY NO.	RESORPTIONS LATE NO.	DEAD FETUSES NO.	POST IMPLAN-TATION LOSS NO.	SEX NO. MALES	SEX NO. FEMALES	SEX M:F RATIO	MEAN FETAL BODY WEIGHT (g) MALE	MEAN FETAL BODY WEIGHT (g) FEMALE	MEAN FETAL BODY WEIGHT (g) M & F	GRAVID UTERINE WT. GRAMS	CORRECTED BODY WT. (g)
315	G6544	SPONTANEOUS DEATH - PREGNANT			-	-	-	-	-	-:-	--	--	-----	-----	-----	-----
316	G6541	SPONTANEOUS DEATH - PREGNANT			-	-	-	-	-	-:-	--	--	-----	-----	-----	-----
317	G6533	SPONTANEOUS DEATH - PREGNANT			-	-	-	-	-	-:-	--	--	-----	-----	-----	-----
318	G6556	SPONTANEOUS DEATH - NOT PREGNANT			-	-	-	-	-	-:-	--	--	-----	-----	-----	-----
319	G6529	EUTHANATIZED - PREGNANT			-	-	-	-	-	-:-	--	--	-----	-----	-----	-----
320	G6532	12	11	11	0	0	0	0	-	-:-	--	--	36.82	563.30	3298.70	
321	G6552	SPONTANEOUS DEATH - PREGNANT			-	-	-	-	-	-:-	--	--	-----	-----	-----	-----
	MEAN	12.0	11.0	11.0	0.0	0.0	0.0	0.0	-	-:-	--	--	36.82	563.30	3298.70	
	SD	0.0	0.0	0.0	0.0	0.0	0.0	0.0	-	-		--	--	0.00	0.00	0.00

INDIVIDUAL LITTER DATA COLLECTED AT CESARIAN SECTION

HAEL NO. 88-0017 ACCESSION NO. 907124 EXPERIMENT NO. 880017T4

START DATE: 11-JUL-88 ROUTE: INHALATION DOSE: 1000.00 PPM REPORT DATE: 27-OCT-88

DAM'S STUDY	NUMBER EAR TAG	NUMBER CORPORA LUTEA	IMPLAN-TATIONS NO.	VIABLE FETUSES NO.	RESORPTIONS EARLY NO.	RESORPTIONS LATE NO.	DEAD FETUSES NO.	POST IMPLAN-TATION LOSS NO.	SEX NO. MALES	SEX NO. FEMALES	SEX M:F RATIO	MEAN FETAL BODY WEIGHT (g) MALE	MEAN FETAL BODY WEIGHT (g) FEMALE	MEAN FETAL BODY WEIGHT (g) M & F	GRAVID UTERINE WT. GRAMS	CORRECTED BODY WT. (g)
322	G6539	SPONTANEOUS DEATH - PREGNANT			-	-	-	-	-	-:-	--	--	--	------	-------
323	G6550	SPONTANEOUS DEATH - PREGNANT			-	-	-	-	-	-:-	--	--	--	------	-------
324	G6538	SPONTANEOUS DEATH - PREGNANT			-	-	-	-	-	-:-	--	--	--	------	-------
325	G6530	EUTHANATIZED - PREGNANT			-	-	-	-	-	-:-	--	--	--	------	-------
326	G6536	EUTHANATIZED - PREGNANT			-	-	-	-	-	-:-	--	--	--	------	-------
327	G6553	8	8	7	0	1	0	1	-	-	-:-	--	--	43.82	493.90	3103.10
328		NOT BRED	-	-	-	-	-	-	-	-	-:-	--	--	--	-------	-------
	MEAN	8.0	8.0	7.0	0.0	1.0	0.0	1.0	-	-	-:-	--	--	43.82	493.90	3103.10
	SD	0.0	0.0	0.0	0.0	0.0	0.0	0.0	-	-		--	--	0.00	0.00	0.00

INDIVIDUAL LITTER DATA - EXTERNAL FETAL ALTERATIONS

KEY

SEX: M = Male F = Female U = Unknown

STATUS: D = Dead E = Early Resorption L = Late Resorption

EXTERNAL EXAM: N = Normal A = Abnormal

FIXATIVE: B = Bouin's A = Alcohol

INDIVIDUAL LITTER DATA – EXTERNAL FETAL ALTERATIONS

HAEL NO. 88-0017 ACCESSION NO. 907124 EXPERIMENT NO. 88001714
START DATE: 11-JUL-88 ROUTE: INHALATION DOSE: CONTROL REPORT DATE: 24-JAN-89

DAM	FETUS	LOCATION	SEX (M/F/U)	WEIGHT (GRAMS)	STATUS (A/D/E/L)	CROWN-RUMP LENGTH (MM)	EXTERNAL EXAM (N/A)	FIXATIVE (B/A/)
		COMMENT		ABNORMALITY			SEVERITY	
301	L 1		U	36.27	A	0.00	N	
	L 2		U	36.09	A	0.00	N	
	R 1		U	32.79	A	0.00	N	
	R 2		U	35.32	A	0.00	N	
	R 3		U	29.18	A	0.00	N	
	R 4		U	32.08	A	0.00	N	
	R 5		U	25.69	A	0.00	N	
	R 6		U	32.95	A	0.00	N	
	R 7		U	31.28	A	0.00	N	
	R 8		U	33.69	A	0.00	N	
302	L 1		U	46.00	A	0.00	N	
	L 2		U	47.78	A	0.00	N	
	L 3		U	45.36	A	0.00	N	
	L 4		U	0.00	E	0.00	A	
	R 1		U	50.62	A	0.00	N	
	R 2		U	50.56	A	0.00	N	
	R 3		U	53.64	A	0.00	N	
304	L 1		U	39.99	A	0.00	N	
	L 2		U	36.66	A	0.00	N	
	L 3		U	37.06	A	0.00	N	
	L 4		U	33.73	A	0.00	N	
	L 5		U	0.00	E	0.00	A	
	R 1		U	43.05	A	0.00	N	
	R 2		U	33.90	A	0.00	N	
	R 3		U	34.03	A	0.00	N	
	R 4		U	32.69	A	0.00	N	
	R 5		U	26.89	A	0.00	N	
	R 6		U	30.37	A	0.00	N	
	R 7		U	34.42	A	0.00	N	
305	L 1		U	40.48	A	0.00	N	
	L 2		U	36.79	A	0.00	N	
	L 3		U	37.99	A	0.00	N	
	L 4		U	43.16	A	0.00	N	
	R 1		U	45.28	A	0.00	N	
	R 2		U	38.25	A	0.00	N	
	R 3		U	37.51	A	0.00	N	
	R 4		U	43.54	A	0.00	N	
306	L 1		U	39.98	A	0.00	N	
	L 2		U	39.45	A	0.00	N	
	R 1		U	40.02	A	0.00	N	
	R 2		U	40.81	A	0.00	N	
	R 3		U	38.92	A	0.00	N	
307	L 1		U	45.11	A	0.00	N	
	L 2		U	42.93	A	0.00	N	
	L 3		U	41.33	A	0.00	N	
	L 4		U	46.71	A	0.00	N	
	R 1		U	47.96	A	0.00	N	
	R 2		U	0.00	E	0.00	A	
	R 3		U	41.93	A	0.00	N	

KEY: N – EXAMINED AND NORMAL, 1 – MINIMAL, 2 – MINOR, 3 – MODERATE, 4 – SEVERE, P – PRESENT, A – ABSENT

INDIVIDUAL LITTER DATA - EXTERNAL FETAL ALTERATIONS

HAEL NO. 88-0017 ACCESSION NO. 907124 EXPERIMENT NO. 880017T4
START DATE: 11-JUL-88 ROUTE: INHALATION DOSE: 400.000PPM REPORT DATE: 24-JAN-89

DAM	FETUS	LOCATION	SEX (M/F/U)	WEIGHT (GRAMS)	STATUS (A/D/E/L)	CROWN-RUMP LENGTH (MM)	EXTERNAL EXAM (N/A)	FIXATIVE (B/A/)
				COMMENT	ABNORMALITY		SEVERITY	
308	L 1		U	0.00	E	0.00	A	
	L 2		U	0.00	E	0.00	A	
	L 3		U	41.89	A	0.00	N	
	L 4		U	42.28	A	0.00	N	
	L 5		U	41.45	A	0.00	N	
	R 1		U	42.46	A	0.00	N	
	R 2		U	0.00	E	0.00	A	
	R 3		U	41.44	A	0.00	N	
	R 4		U	45.05	A	0.00	N	
	R 5		U	0.00	E	0.00	A	
	R 6		U	0.00	E	0.00	A	
309	L 1		U	49.11	A	0.00	N	
	L 2		U	42.18	A	0.00	N	
	L 3		U	46.39	A	0.00	N	
	R 1		U	45.23	A	0.00	N	
	R 2		U	43.59	A	0.00	N	
	R 3		U	43.59	A	0.00	N	
	R 4		U	39.64	A	0.00	N	
310	L 1		U	36.09	A	0.00	N	
	L 2		U	25.81	A	0.00	N	
	L 3		U	27.65	A	0.00	N	
	L 4		U	29.38	A	0.00	N	
	L 5		U	27.89	A	0.00	N	
	R 1		U	35.48	A	0.00	N	
	R 2		U	31.24	A	0.00	N	
	R 3		U	31.47	A	0.00	N	
311	L 1		U	49.98	A	0.00	N	
	L 2		U	37.08	A	0.00	N	
	L 3		U	32.73	A	0.00	N	
	L 4		U	30.74	A	0.00	N	
	L 5		U	31.43	A	0.00	N	
	R 1		U	42.72	A	0.00	N	
	R 2		U	39.97	A	0.00	N	
	R 3		U	38.34	A	0.00	N	
	R 4		U	34.15	A	0.00	N	
	R 5		U	37.63	A	0.00	N	
312	L 1		U	50.09	A	0.00	N	
	L 2		U	45.61	A	0.00	N	
	L 3		U	44.96	A	0.00	N	
	L 4		U	49.67	A	0.00	N	
	L 5		U	43.70	A	0.00	N	
	R 1		U	49.43	A	0.00	N	
	R 2		U	46.77	A	0.00	N	
	R 3		U	47.75	A	0.00	N	
313	L 1		U	25.50	A	0.00	N	
	L 2		U	40.96	A	0.00	N	
	L 3		U	46.21	A	0.00	N	
	R 1		U	0.00	E	0.00	A	
	R 2		U	26.00	A	0.00	N	

KEY: N - EXAMINED AND NORMAL, 1 - MINIMAL, 2 - MINOR, 3 - MODERATE, 4 - SEVERE, P - PRESENT, A - ABSENT

INDIVIDUAL LITTER DATA - EXTERNAL FETAL ALTERATIONS

HAEL NO. 88-0017 ACCESSION NO. 907124 EXPERIMENT NO. 880017T4
START DATE: 11-JUL-88 ROUTE: INHALATION DOSE: 400.000PPM REPORT DATE: 24-JAN-89

DAM	FETUS	LOCATION	SEX (M/F/U)	WEIGHT (GRAMS)	STATUS (A/D/E/L)	CROWN-RUMP LENGTH (MM)	EXTERNAL EXAM (N/A)	FIXATIVE (B/A/)
				COMMENT	ABNORMALITY		SEVERITY	
313	R 3		U	23.70	A	0.00	N	
	R 4		U	25.57	A	0.00	N	
	R 5		U	30.45	A	0.00	N	
	R 6		U	27.99	A	0.00	N	
	R 7		U	0.00	E	0.00	A	
	R 8		U	32.90	A	0.00	N	

KEY: N - EXAMINED AND NORMAL, 1 - MINIMAL, 2 - MINOR, 3 - MODERATE, 4 - SEVERE, P - PRESENT, A - ABSENT

INDIVIDUAL LITTER DATA - EXTERNAL FETAL ALTERATIONS

HAEL NO. 88-0017 ACCESSION NO. 907124 EXPERIMENT NO. 880017I4
START DATE: 11-JUL-88 ROUTE: INHALATION DOSE: 800.000PPM REPORT DATE: 24-JAN-89

DAM	FETUS	LOCATION	SEX (M/F/U)	WEIGHT (GRAMS)	STATUS (A/D/E/L)	ABNORMALITY	CROWN-RUMP LENGTH (MM)	EXTERNAL EXAM (N/A)	SEVERITY	FIXATIVE (B/A/)	COMMENT
320	L 1		U	35.29	A		0.00	N			
	L 2		U	41.54	A		0.00	N			
	L 3		U	35.58	A		0.00	N			
	L 4		U	35.00	A		0.00	N			
	L 5		U	36.31	A		0.00	N			
	L 6		U	32.64	A		0.00	N			
	L 7		U	40.33	A		0.00	N			
	R 1		U	37.89	A		0.00	N			
	R 2		U	37.52	A		0.00	N			
	R 3		U	40.56	A		0.00	N			
	R 4		U	32.37	A		0.00	N			

KEY: N - EXAMINED AND NORMAL, 1 - MINIMAL, 2 - MINOR, 3 - MODERATE, 4 - SEVERE, P - PRESENT, A - ABSENT

INDIVIDUAL LITTER DATA - EXTERNAL FETAL ALTERATIONS

HAEL NO. 88-0017 ACCESSION NO. 907124 EXPERIMENT NO. 88017T4
START DATE: 11-JUL-88 ROUTE: INHALATION DOSE: 1000.000PPM REPORT DATE: 24-JAN-89

DAM	FETUS	LOCATION	SEX (M/F/U)	WEIGHT (GRAMS)	STATUS (A/D/E/L)	CROWN-RUMP LENGTH (MM)	EXTERNAL EXAM (N/A)	FIXATIVE (B/A/)
				COMMENT	ABNORMALITY		SEVERITY	
327	L 1		U	49.07	A	0.00	N	
	L 2		U	45.17	A	0.00	N	
	L 3		U	39.80	A	0.00	N	
	L 4		U	46.40	A	0.00	N	
	R 1		U	42.76	A	0.00	N	
	R 2		U	0.00	L	0.00	A	
	R 3		U	41.57	A	0.00	N	
	R 4		U	41.97	A	0.00	N	

KEY: N - EXAMINED AND NORMAL, 1 - MINIMAL, 2 - MINOR, 3 - MODERATE, 4 - SEVERE, P - PRESENT, A - ABSENT

CHEMICALS QUALITY SERVICES DIVISION REPORT FOR: TOXICOLOGY

CQSD FILE #: EE8H014 DATE RECEIVED: 04/07/88

STUDY DIRECTORS: E. Renner, E. Barber,
G. Katz and D. Morgott DATE ANALYZED: 04/07/88
04/18/88

REQUEST #: 131140

DATE REPORTED: 04/20/88

TITLE: Purity and Structure Confirmation

AUTHOR: N. Porter

SAMPLE IDENTIFICATION: Ethylene Glycol Monopropyl Ether, HAEL # 88-0017, ACC # 907124 Lot T62-15 (1-19-88)

FOR MORE INFORMATION OR FURTHER WORK PLEASE CONTACT: Karen Burgess @ 25925

REPORT:

The test chemcial was received and analyzed for purity using GC/FID, and analyzed by GC/MS by electron impact ionization for structure confirmation. The results are as follows:

Purity (area percent)

Mean = 99.9
n = 3
SD = 0

The mass spectrum of the test chemical is consistent with the structure of ethylene glycol monopropyl ether based on comparison with reference library spectrum.

SIGNED: N. Porter
K Burgess

CHEMICALS QUALITY SERVICES DIVISION REPORT FOR: TOXICOLOGY

CQSD FILE #: EE8H014

DATE RECEIVED: 08/04/88
08/08/88

STUDY DIRECTORS: E. Renner, W. Krasavage
G. Katz

DATE ANALYZED: 08/09/88

REQUEST #: 131144 and 126659

DATE REPORTED: 08/11/88

TITLE: Purity and Structure Confirmation

AUTHOR: N. Porter

SAMPLE IDENTIFICATION: Ethylene Glycol Monopropyl Ether, HAEL # 88-0017, ACC # 907124, Lot T6Z-15(1/19/88) and Lot T6Z-15(7/21/88)

FOR MORE INFORMATION OR FURTHER WORK PLEASE CONTACT: K. Robillard, N. Porter

REPORT:

Two samples of the test chemcial were received and analyzed for purity using GC/FID, and analyzed by GC/MS by electron ionization for structure confirmation.

The results are as follows:

Purity (area percent)

Lot 1/19/88	Mean = 99.8 n = 3 SD = 0	Lot 7/21/88	Mean = 99.9 n = 3 SD = 0

The mass spectra of the two samples are identical to one another and consistent with the structure of ethylene glycol monopropyl ether, based on comparison with reference library spectrum.

SIGNED: Nancy Porter
K A Robillard
8-26-88

Inhalation Report

Summary

Exposures to EP were conducted in 4.2 m^3 stainless steel and glass inhalation chambers at target concentrations of 400, 800, and 1000 ppm. The chambers were maintained at a negative pressure of 0.5 inch water relative to room air, and at 12 air changes per hour. For each concentration level, rabbits were singly housed and exposed for six hours.

The EP vapor distribution was measured for 8 cage positions within each inhalation chamber, and compared to a fixed reference position. Subsequently, chamber aerosol concentration was measured from a fixed sampling position selected to represent the overall chamber mean concentration.

Mean EP vapor concentrations (± SD) determined by infrared spectroscopy were 400 ± 16, 778 ± 23, and 955 ± 45 ppm. These concentrations were comparable to the target values of 400, 800, and 1000 ppm. Nominal concentrations were 571, 1160, and 1200 ppm.

Overall chamber temperature and relative humidity varied from 72 to 75°F (22 to 24°C) and 44 to 54%, respectively.

No mortality occurred during the exposure phase of this study.

A complete description of EP generation, sampling, and analysis is presented on the following pages.

There were no SOP or protocol deviations.

Test Atmosphere Generation

Ethylene glycol monopropyl ether (EP) was metered by a FMI Fluid Metering Pump Model No. RP-SY, (Fluid Metering, Inc., Oyster Bay, NY) from a graduated cylinder reservoir, into a glass distilling column (7/8" x 15", Ace Glass Inc., Vineland, NJ). The liquid trickled over the surface of tightly packed glass beads (4 mm diameter) within the column. Compressed air (Kodak Park Utilities Division) metered at 24, 42, 40, and 61 Lpm for groups 1, 2, 3, and 4, respectively, was passed through an indicating silica gel drier and an oil filter (Deltech Engineering Inc., New Castle, DE). The dried, oil-free air entered the column and passed over the surface of the glass beads (See Figure, Page 6 of 10). Vapor temperature was measured in a round bottom flask as it exhausted the distilling column and was maintained at an elevated temperature, to reduce the potential for condensation. The liquid delivery rate and compressed airflow rate were adjusted to produce the desired chamber target vapor concentration. The resultant vapor was directed via glass tubing to a

tee just upstream of the inhalation chamber where it was mixed with filtered, conditioned exterior dilution air (840 liters per minute total airflow) to produce 12 air changes per hour. The chamber effluent air was filtered through HEPA and charcoal filters.

Vapor Analysis

Chamber vapor concentrations were monitored with an automated multipositional air sampling and analysis system. The system consisted of a MIRAN® IA infrared gas analyzer (Wilks Foxboro Analytical, South Norwalk, CT), a Perkin-Elmer SIGMA 15 data station, and a four-port multipositional environmental sampling valve (Valco Instruments, Houston, TX). The system was configured as shown in Figure 2, Page 7 of 10.

Chamber vapor samples were continuously collected, from a fixed reference position (centered between cages 7 and 16 - based on a vapor distribution study described in a subsequent section - see also Figure, Page 8 of 10), through the four port valve using TEFLON® tubing (3/16" ID). The voltage output of a sampled atmosphere was integrated over a one minute interval following a five minute flushing period. The Perkin-Elmer SIGMA 15 data station calculated the vapor concentration by analog-to-digital conversion and linear interpolation between selected calibration data points. These points were produced by the "MIRAN" calibration program during technical development. Basic program called "Temp", is used by the SIGMA 15 microprocessor for automated Vapor concentration calculation by simple linear interpolation between specific data points on the calibration curve. Then, the procedure is repeated until termination of the six hour exposure.

The nominal concentration was calculated by dividing the amount of EP consumed from the graduated reservoir (determined volumetrically), by the total chamber air flow using the formula:

$$C\ (ppm) = \frac{V_1 \times p \times 1000}{V_2} \times \frac{24.45}{MW}$$

where: V_1 = amount vaporized (mL)
p = EP density = 0.913 g/cc
V_2 = total daily chamber air flow = 302.4 m^3
24.45 = molar volume at 1 atm and 25°C
MW = EP molecular weight = 104.15

Total chamber flow was monitored via a MAGNEHELIC® gauge (Dwyer Instruments, Inc., Michigan City, IN) which measured the differential pressure across an orifice located in the chamber exhaust duct. The chamber flow corresponding to the gauge value was determined weekly, using a KURZ hotwire anemometer (Kurz Instruments, Inc., Carmel Valley, CA) to determine the linear velocity of the supply air. From the supply air linear velocity, the mass flow (L/min) was calculated from the following formula:

$$\frac{Q = I \times V}{1000}$$

where: Q = Supply air flow rate (L/min)
I = Cross sectional area of the air supply duct
3.14159 x (2 in. x 2.54 cm/in.)^2 sq. cm
V = Linear Velocity determined from the anemometer and converted to cm/min.
1000 = Conversion from cubic centimeters to liters.

The chamber was maintained at a negative pressure of 0.5 inch of water (gauge).

Aerosol Measurements

A Royco Model 4100 Aerosol Particle Counter (HIAC/Royco Instruments Division, Pacific Scientific, Menlo Park, CA) was used to measure non-gaseous airborne material within each EP inhalation chamber. The particle counter sampled the chamber atmosphere once each day during exposure from a fixed reference position at 0.01 cfm for one minute, and counted airborne particles greater than 0.5 µm. The results were compared to that of an air chamber, and the equivalent vapor concentration from the particle count was calculated as if all the particulate matter was EP. The equivalent vapor concentration never exceeded 0.05 ppm (approximately 0.01% of the 400 ppm target concentration) and did not represent a significant amount of EP aerosol.

Chamber Temperature and Humidity

Chamber temperature and humidity were recorded semihourly during each exposure from a modified Taylor hygrometer (Taylor Instruments, Sybron Corp., Arden, NC). The hygrometer was modified to provide sufficient ventilation for the wet bulb sock, by drawing air over the surface of the wet bulb at about 5 L/min with a vacuum source located outside the chamber. The effluent air was filtered through HEPA and charcoal filters.

MIRAN® IA Infrared Analyzer Operating Parameters and Calibration

The infrared analyzer operating parameters were as follows:

MIRAN® No.	3
Pathlength (m)	2.25
Wavelength (um)	3.46
Slit (mm)	1
Response Time (sec)	1
Range (Absorption)	1
Gain	x1
Temperature (°K)	298
Pressure (atm)	0.833

These parameters were selected by comparing the EP infrared spectra to that of EP-free air.

The infrared analyzer was calibrated for EP quantitation by making serial injections (Hamilton microliter syringe) into a closed-loop cell with a measured volume of EP. Each serial injection concentration was determined from the following formula:

$$C = \frac{\rho \times V_1}{MW} \times \frac{R \times T}{P} \times \frac{1000}{V_2}$$

where: C = concentration (ppm)
ρ = density = 0.913 g/cc
V_1 = serial injection volume (µL)
MW = molecular weight = 104.15 g/mole
R = gas constant = 0.08205
T = MIRAN® cell temperature = 298°K
P = MIRAN® cell pressure = 0.833 atm
V_2 = MIRAN® cell volume = 5.64 L

Three sets of serial injections were made to produce a mean calibration curve of EP concentration versus infrared analyzer output voltage. The calibration data were stored in an AATS computer file. Voltage data were converted to concentration by linear interpolation between the calibration data points immediately on each side of the sampled data, as described previously under the section Vapor Analysis.

An infrared analyzer calibration check was performed just prior to exposure of the first group, by injecting a measured amount of EP into the MIRAN® closed calibration loop. The infrared analyzer output voltage was converted to EP concentration and compared to the calculated expected concentration. The two concentrations varied from each other by a range of -5.8 to 4.4%.

Chamber Vapor Distribution

Vapor distribution within each chamber was characterized to determine positional variations. The atmosphere was sequentially sampled from within 8 cage positions (Figure, Page 9 of 10). Reference samples from a fixed position, were alternated with cage samples, and were taken from a near center location (between cages 5 and 14).

All samples were analyzed by infrared spectroscopy. The mean concentration (relative standard deviation)of the samples taken from the 8 cage positions was 484 ppm (7%), 1040 ppm (16%), and 967 ppm (5%), for chambers C-02, C-03, and C-04, respectively (Table, Page 10 of 10). The mean concentration and (relative standard deviation) of the 8 samples from the fixed reference position was 413 ppm (3%), 828 ppm (2%), and 918 ppm (1%) for chambers C-02, C-03, and C-04, respectively. The results indicate that the EP vapor concentration of the cage positions is higher than the reference position, and there is more variability between cage positions, than reference positions. Cage position 7 was selected as the reference position, because it approximates the mean concentration of the cage positions.

Gary Katz 4-6-89
Gary V. Katz, Ph.D.

GVK:cpp
04/06/89
4423T

STUDY SUMMARY OF EXPOSURE CONDITIONS

Compound: Ethylene Glycol Monopropyl Ether (EP)

Study No: 880017T4
Accession No: 907124
Compound No: 88-0017

Target Concentration (ppm)	0	400	800	1000
Number of Exposures	14	14	14	14
Analyzed Concentration (ppm)				
Mean[1] ± SD	0±0	400±16	778±23	955±45
n	142	142	141	141
Extremes of Daily Means	0-0	359-422	740-813	810-992
Nominal Concentration (ppm)				
Mean[2] ± sd	0	571±40	1160±100	1299±31
n	14	14	14	14
Temperature (°C)				
Mean ± SD	22.0±0.6	23.5±0.8	23.2±0.8	23.6±0.8
n	168	168	168	168
Relative Humidity (±)				
Mean ± SD	44±3	52±2	54±3	54±3
n	168	168	168	168

[1]Particle count data indicated that no aerosol was present.
[2]Calculated from daily chemical consumption and total airflow.

VAPOR GENERATING SYSTEM

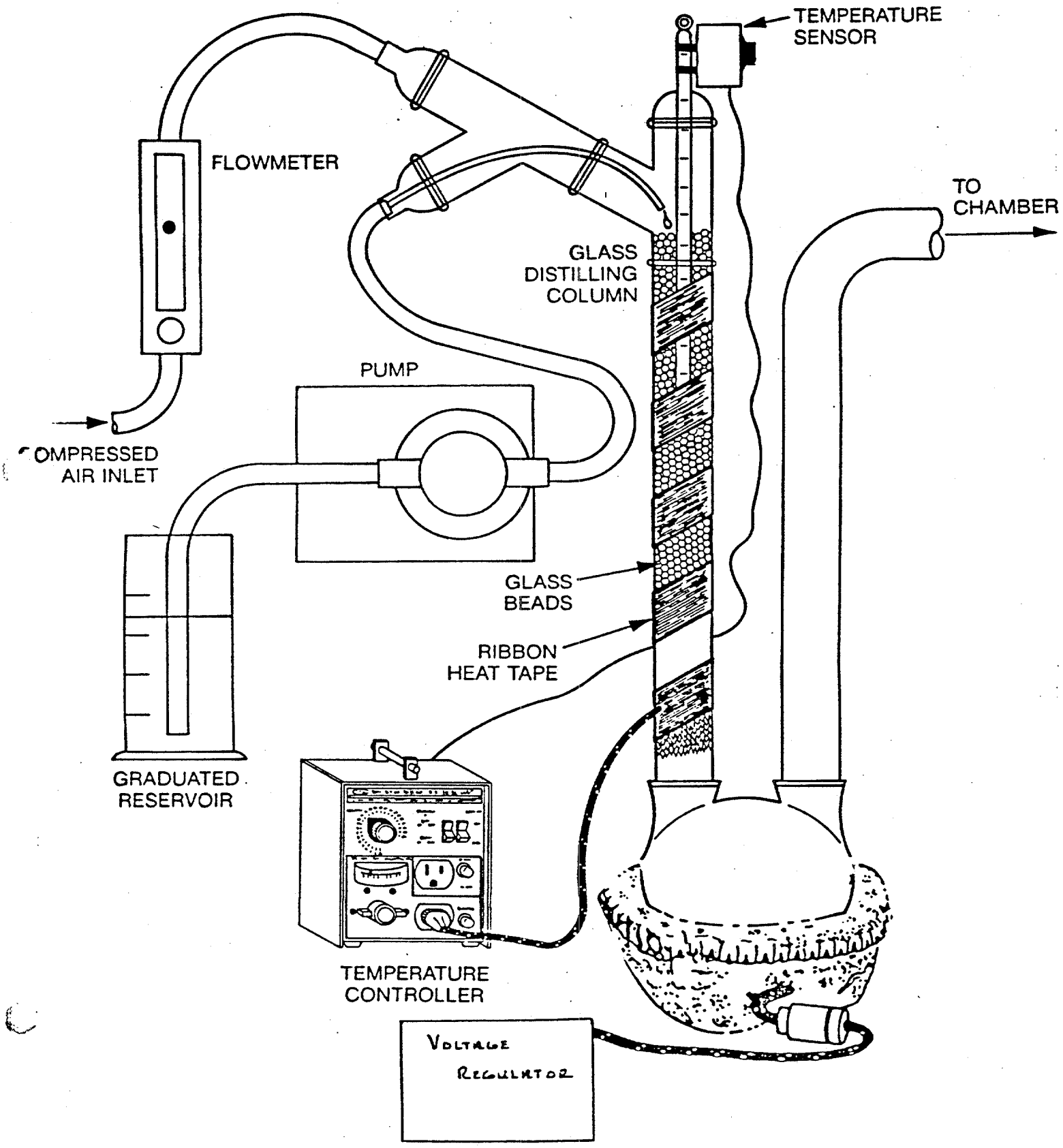

AUTOMATED MULTIPOSITIONAL ENVIRONMENTAL SAMPLING AND ANALYSIS SYSTEM

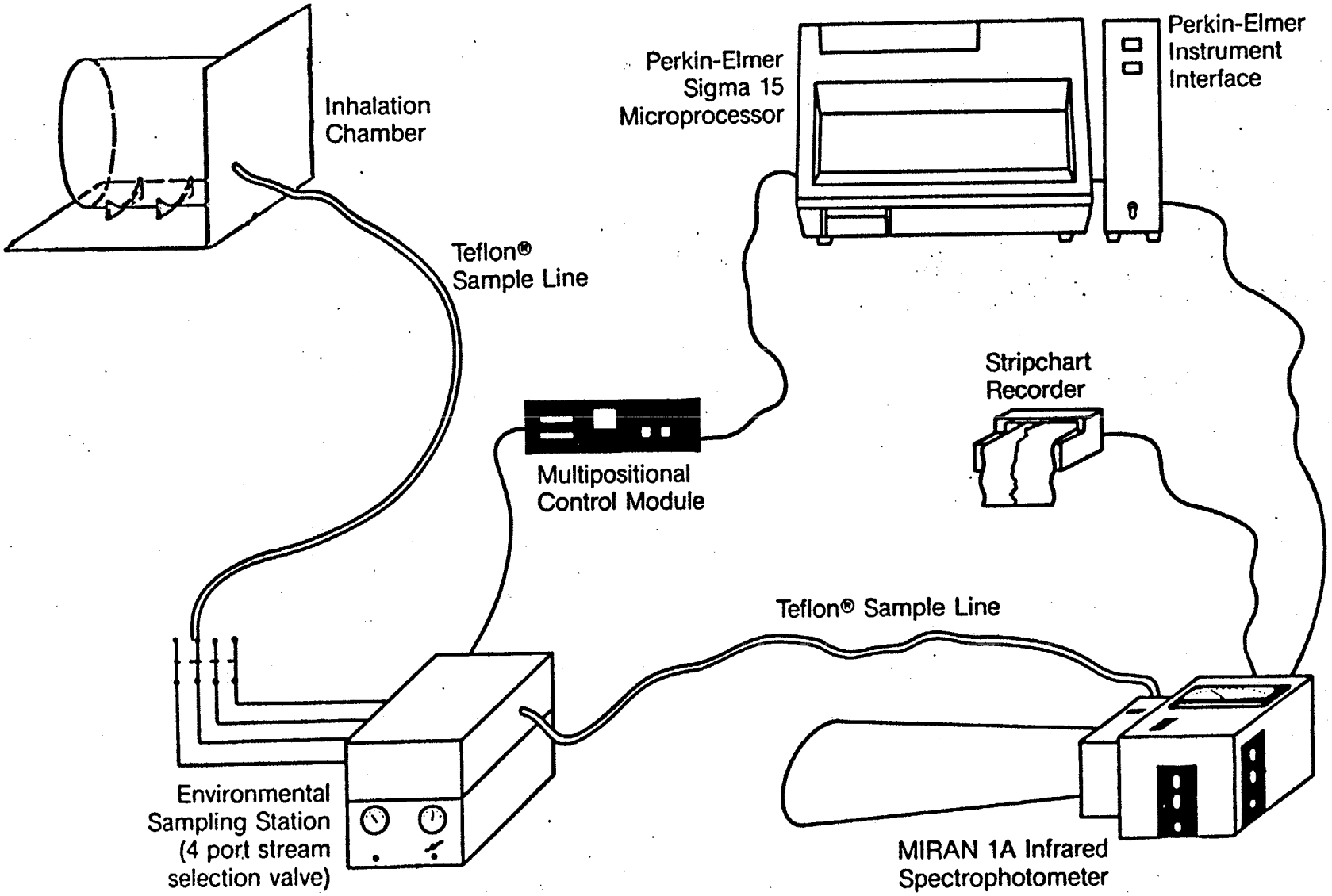

EXPLODED VIEW OF C-SERIES CHAMBER

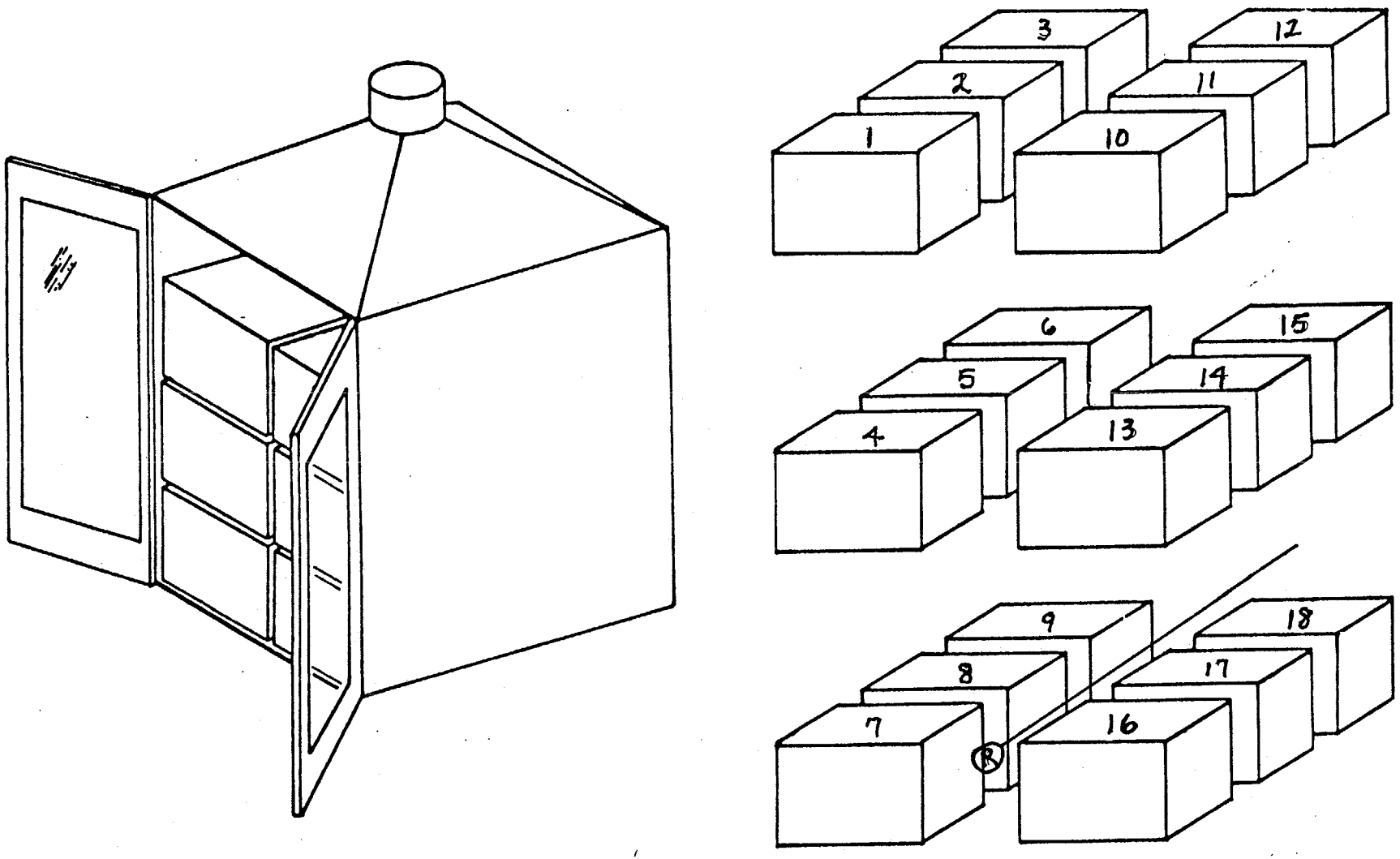

Cage orientation and position of air sampler (R) for determination of chamber concentration.

EXPLODED VIEW OF C-SERIES CHAMBER

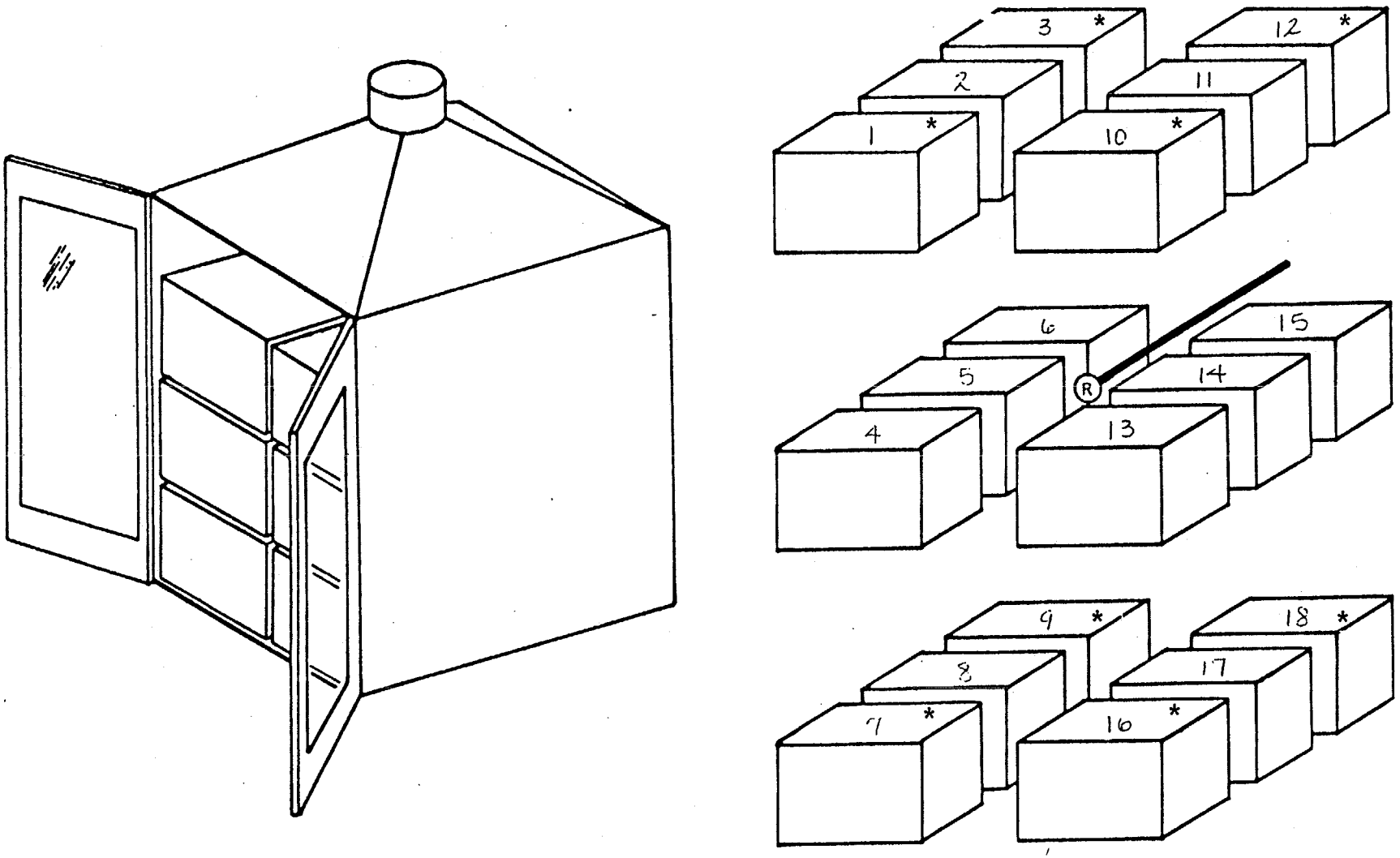

*These 8 cages were sampled for vapor distribution analysis.

EP Vapor Concentration (ppm)

Cage Position	Chamber C-02	C-03	C-04
1	519	1129	1037
3	474	1180	999
7	495	1014	983
9	437	1138	949
10	514	1176	937
12	521	892	1024
16	463	1087	906
18	445	700	904
Cage Position Mean	484	1040	967
Cage Position S.D.	34	167	51
Ref. Position Mean	413	828	918
Ref. Position S.D.	12	17	7

Absolute Percentage Difference from Mean Cage Concentration

Cage Position	Chamber C-02	C-03	C-04
1	7.3	8.6	7.2
3	2.0	13.5	3.3
7[1]	2.4	2.5	1.6
9	9.6	9.5	1.9
10	6.3	13.1	3.1
12	7.8	14.2	5.9
16	4.2	4.6	6.3
18	8.0	32.7	6.6

[1] Cage position 7 selected as a reference position due to the low variation from the mean of the cage postions

Nominal Concentration (summary)

DATE	GROUP 2 - 400 ppm			GROUP 3 - 800 ppm			GROUP 4 - 1000 ppm		
	MIRAN IR Analysis	Consump (mL)	Nominal (ppm)	MIRAN IR Analysis	Consump (mL)	Nominal (ppm)	MIRAN IR Analysis	Consump (mL)	Nominal (ppm)
17-Jul-88	394	764	542	770	1667	1182	979	1866	1322
18-Jul-88	379	749	531	797	1886	1336	958	1811	1284
19-Jul-88	359	774	549	758	1846	1308	933	1786	1266
20-Jul-88	422	824	584	794	1618	1147	954	1816	1287
21-Jul-88	412	819	580	780	1409	999	965	1806	1280
22-Jul-88	398	799	566	740	1469	1041	956	1816	1287
23-Jul-88	389	963	682	742	1846	1308	810	1925	1365
24-Jul-88	406	734	521	813	1588	1125	985	1816	1287
25-Jul-88	395	849	601	793	1508	1069	967	1766	1252
26-Jul-88	410	844	598	763	1588	1125	957	1836	1301
27-Jul-88	409	814	577	769	1667	1182	978	1846	1308
28-Jul-88	410	794	563	776	1637	1161	955	1826	1294
29-Jul-88	410	789	559	807	1598	1132	992	1836	1301
30-Jul-88	408	754	535	791	1578	1118	980	1915	1358
Mean	400	805	571	778	1636	1160	955	1833	1299
STD.DEV.	16	57	40	23	141	100	45	44	31
N	14	14	14	14	14	14	14	14	14
% > than IR			42.6			49.0			36.1

MIRAN OUTPUT & CHAMBER CONCENTRATION					CHAMBER TEMPERATURE & RELATIVE HUMIDITY								
CHAMBER:	C-01	C-02	C-03	C-04	CHAMBER:	C-01	C-01	C-02	C-02	C-03	C-03	C-04	C-04
Group	1	2	3	4	Group	1	1	2	2	3	3	4	4
(ppm)	0	400	800	1000	TIME	T	RH	T	RH	T	RH	T	RH
17-Jul-88	0	335	768	985	7:00	21.1	52	21.7	57	21.7	60	22.2	61
	0	375	755	967	7:30	21.1	48	22.8	54	22.2	57	22.8	58
	0	385	715	969	8:00	21.1	48	22.8	54	22.2	57	23.3	54
	0	395	724	969	8:30	21.1	48	23.3	51	22.8	54	23.3	54
	0	396	773	973	9:00	21.7	45	23.3	51	22.8	58	23.3	58
	0	407	772	979	9:30	21.7	41	23.3	54	22.8	58	23.3	58
	0	406	771	989	10:00	21.7	41	23.3	54	22.8	58	23.9	55
	0	410	792	991	10:30	21.7	45	23.3	54	23.3	54	23.9	55
	0	412	830	992	11:00	21.7	41	23.3	54	23.3	54	23.9	55
	0	415	795	973	11:30	21.7	41	23.3	54	23.3	54	23.9	55
					12:00	21.7	41	23.3	54	23.3	54	23.9	55
					12:30	21.7	41	23.3	54	23.3	54	23.9	55
18-Jul-88	0	362	693	987	8:30	20.6	47	21.7	57	21.7	60	21.7	60
	0	375	706	1012	9:00	21.1	44	22.2	57	22.2	57	22.2	57
	0	379	745	988	9:30	21.1	44	22.8	54	22.8	58	22.8	58
	0	385	794	976	10:00	21.7	45	23.3	51	23.3	54	23.3	54
	0	383	827	969	10:30	21.7	45	23.3	54	23.3	58	23.3	54
	0	387	816	977	11:00	21.7	45	23.3	54	23.9	55	23.3	58
	0	379	713	916	11:30	21.7	45	23.9	51	23.9	55	23.9	55
	0	379	842	923	12:00	22.2	42	23.9	55	23.9	55	23.9	55
	0	377	957	920	12:30	22.2	46	23.9	55	23.9	59	23.9	55
	0	381	882	916	13:05	22.2	46	24.4	52	24.4	56	24.4	56
					13:30	22.2	46	24.4	52	24.4	56	24.4	56
					13:55	22.2	50	24.4	52	24.4	56	24.4	56
19-Jul-88	0	297	710	904	8:15	21.7	49	22.2	57	21.7	60	22.2	57
	0	372	753	925	8:45	21.7	45	22.8	54	22.2	57	22.2	57
	0	381	787	912	9:15	21.7	45	23.3	51	22.8	54	23.3	54
	0	371	756	925	9:45	21.7	45	23.3	51	23.3	51	23.3	54
	0	381	770	942	10:15	21.7	45	23.9	51	23.3	54	23.3	54
	0	398	758	933	10:45	22.2	42	23.9	51	23.3	54	23.9	55
	0	399	758	931	11:15	21.7	45	23.9	51	23.9	51	23.9	51
	0	409	759	943	11:45	22.2	42	23.9	51	23.9	51	23.9	51
	0	420	762	952	12:15	22.2	42	23.9	51	23.9	55	23.9	55
	0	415	761	948	12:45	22.2	42	24.4	52	23.9	55	24.4	52
	0	111	764	946	13:15	22.2	42	24.4	52	23.9	55	24.4	52
					13:40	22.2	46	24.4	52	23.9	55	24.4	52
20-Jul-88	0	389	860	913	8:00	21.1	46	21.7	53	21.1	56	21.1	60
	0	437	883	947	8:30	21.1	48	22.2	53	21.7	57	22.2	53
	0	426	846	961	9:00	21.7	49	22.8	50	22.2	53	22.8	54
	0	427	814	956	9:35	21.7	49	23.3	51	22.8	54	22.8	58
	0	432	793	958	10:00	22.2	42	23.3	51	23.3	51	23.3	54
	0	431	743	958	10:30	22.2	42	23.3	51	23.3	51	23.3	54
	0	432	778	966	11:00	22.2	46	23.3	51	23.3	54	23.3	54
	0	425	742	961	11:30	22.2	46	23.9	51	23.3	54	23.9	55
	0	415	756	962	12:00	22.8	47	23.9	51	23.3	58	23.9	55
	0	405	729	954	12:30	22.8	47	23.9	51	23.9	55	24.4	52
					13:00	23.3	47	24.4	52	23.9	55	24.4	52
					13:30	23.3	47	24.4	52	23.9	55	24.4	56
21-Jul-88	0	354	824	956	8:03	21.1	48	21.7	57	21.1	60	21.7	57

	0	360	888	957	8:30	21.7	45	22.2	53	21.7	57	22.2	57
	0	418	801	960	9:00	21.7	49	22.8	54	22.2	53	22.8	54
	0	421	766	969	9:30	22.2	42	23.3	54	22.8	54	23.3	54
	0	440	759	970	10:00	22.2	42	23.3	51	23.3	51	23.3	54
	0	416	746	970	10:30	22.2	42	23.3	47	23.3	51	23.9	51
	0	433	747	968	11:00	22.2	42	23.3	51	23.3	51	23.9	51
	0	432	757	967	11:30	22.2	42	23.9	51	23.3	54	23.9	51
	0	424	764	964	12:00	22.2	42	23.9	51	23.9	51	24.4	52
	0	425	748	971	12:30	22.8	43	23.9	51	23.9	51	24.4	49
					13:00	22.8	43	23.9	51	23.9	51	24.4	49
					13:30	22.2	42	23.9	51	23.9	51	24.4	49
22-Jul-88	0	387	678	914	8:15	21.1	44	22.2	53	21.7	57	22.2	53
	0	414	732	955	8:40	21.7	41	22.8	50	22.2	57	22.2	57
	0	405	724	962	9:10	21.7	45	23.3	51	22.8	54	22.8	54
	0	402	772	958	9:40	22.2	42	23.3	51	23.3	54	23.3	54
	0	386	762	957	10:10	22.2	42	23.3	51	23.3	54	23.3	54
	0	387	740	954	10:40	22.2	42	23.3	51	23.3	54	23.3	54
	0	398	752	953	11:10	22.2	42	23.2	51	23.3	54	23.9	51
	0	396	736	974	11:40	22.2	42	23.9	48	23.9	51	23.9	51
	0	403	766	976	12:10	22.2	42	23.9	51	23.9	51	23.9	51
					12:40	22.2	42	23.9	51	23.9	51	23.9	51
					13:10	22.2	42	23.9	51	23.9	51	23.9	51
					13:35	22.2	42	23.9	48	23.9	51	23.9	51
23-Jul-88	0	283	619	729	6:30	21.1	44	21.7	53	21.1	56	21.7	57
	0	367	660	789	7:00	21.1	48	22.2	53	21.7	57	22.2	53
	0	405	694	823	7:30	21.1	44	22.8	50	22.2	53	22.2	53
	0	400	725	941	8:00	21.7	45	22.8	54	22.2	57	22.8	54
	0	397	736	947	8:30	21.7	45	23.3	51	22.8	54	23.3	54
	0	401	723	954	9:00	21.7	45	23.3	51	22.8	54	23.3	54
	0	419	797	959	9:30	21.7	45	23.3	51	22.8	54	23.3	54
	0	402	805	958	10:00	22.2	42	23.3	51	22.8	54	23.9	51
	0	399	817	715	10:30	22.2	42	23.3	51	22.8	54	23.9	51
	0	420	844	281	11:00	21.7	45	23.3	51	22.8	58	23.9	51
					11:30	22.2	42	23.9	51	23.3	54	23.3	54
					12:00	22.2	42	23.9	51	23.3	54	23.3	54
24-Jul-88	0	416	825	1142	6:55	21.1	48	22.2	53	21.1	60	21.7	60
	0	466	840	961	7:30	21.7	45	22.8	54	22.2	57	22.8	54
	0	440	837	959	8:00	21.7	45	22.8	54	22.8	54	22.8	54
	0	384	805	961	8.30	22.2	42	23.3	51	22.8	54	23.3	54
	0	392	797	977	9:00	22.2	42	23.3	51	22.8	58	23.3	54
	0	386	789	973	9:30	22.2	42	23.9	51	23.3	54	23.9	55
	0	396	780	961	10:00	22.2	42	23.9	51	23.3	54	23.9	55
	0	386	819	969	10:30	22.8	43	23.9	51	23.3	51	23.9	51
	0	400	815	976	11:00	22.2	39	23.9	48	23.3	51	23.9	51
	0	391	821	974	11:45	22.2	39	23.9	48	23.3	51	23.9	51
					12:05	22.2	39	23.9	48	23.3	58	23.9	51
					12:24	22.2	42	23.9	48	23.3	58	23.9	51
25-Jul-88	0	295	760	964	8:15	21.1	48	22.2	53	22.2	53	22.2	53
	0	353	754	965	8:45	21.7	45	22.8	50	22.2	53	22.8	54
	0	382	819	958	9:15	22.2	42	23.3	51	22.8	54	23.3	54
	0	390	878	962	9:45	22.2	42	23.9	48	23.3	51	23.9	51
	0	408	733	970	10:21	22.2	42	23.9	51	23.3	54	23.9	51
	0	418	796	961	10:45	22.8	43	24.4	49	23.3	54	23.9	51
	0	420	805	974	11:15	22.8	43	24.4	49	23.3	54	24.4	49
	0	418	796	978	11:45	22.8	40	24.4	49	23.9	51	24.4	49
	0	415	795	970	12:15	22.8	40	24.4	49	23.9	51	24.4	49

	0	424	791	966		12:45	22.8	40	24.4	49	23.9	51	24.4	52
	0	427				13:15	22.8	40	24.4	49	24.4	49	24.4	49
						13:43	22.8	40	24.4	49	24.4	52	24.4	52
26-Jul-88	0	378	724	950		8:00	21.1	44	21.7	57	21.1	56	21.1	60
	0	418	701	943		8:30	21.1	44	22.2	53	22.2	53	22.2	57
	0	408	736	954		9:00	21.7	41	22.8	54	22.2	53	22.8	54
	0	413	780	961		9:30	21.7	41	23.3	51	22.8	54	23.3	51
	0	396	789	959		10:00	22.2	42	23.3	51	23.3	51	23.3	51
	0	407	800	971		10:30	22.2	42	23.9	48	23.3	51	23.3	54
	0	431	782	964		11:00	22.2	42	23.9	48	23.3	51	23.9	51
	0	428	777	960		11:30	22.2	42	23.9	48	23.3	51	23.9	51
	0	414	760	956		12:00	22.2	42	24.4	49	23.3	51	23.9	51
	0	412	780	955		12:30	22.2	42	24.4	49	23.3	51	23.9	51
						13:00	22.8	42	24.4	49	23.3	51	24.4	49
						13:30	22.2	42	24.4	45	23.9	51	24.4	49
27-Jul-88	0	381	702	986		7:55	21.1	44	21.1	60	21.7	57	21.1	64
	0	400	792	992		8:23	21.1	41	22.2	57	22.2	53	22.2	57
	0	412	818	990		8:50	21.1	44	22.8	54	22.2	57	22.8	54
	0	418	822	980		9:20	21.7	41	22.2	57	22.8	54	23.3	54
	0	420	763	971		9:50	21.7	45	23.3	51	23.3	51	23.3	54
	0	424	766	977		10:20	21.7	45	23.9	51	23.3	51	23.9	51
	0	420	705	964		10:50	22.2	42	23.9	48	23.3	58	23.9	51
	0	405	716	966		11:10	22.2	42	23.9	48	23.3	58	23.9	55
	0	398	802	971		11:50	22.2	39	23.9	48	23.9	51	24.4	49
	0	410	802	986		12:20	22.2	39	24.4	49	23.9	51	24.4	49
						12:50	22.2	39	24.4	49	23.9	55	24.4	49
						13:34	22.2	39	24.4	49	23.9	55	24.4	52
28-Jul-88	0	391	802	947		8:20	21.1	41	22.2	53	22.2	53	22.2	57
	0	377	869	945		8:50	21.1	41	23.3	51	22.8	54	22.8	54
	0	407	797	972		9:20	21.7	45	23.3	51	23.3	51	23.3	54
	0	421	780	954		9:45	22.2	42	23.9	58	23.3	51	24.4	49
	0	399	764	948		10:15	22.2	42	23.9	51	23.3	51	23.9	51
	0	419	747	951		10:17	22.2	42	23.9	51	23.9	48	23.9	51
	0	423	736	958		11:15	22.2	42	24.4	49	23.9	51	23.9	51
	0	413	759	962		11:45	22.2	39	24.4	49	23.9	51	23.9	51
	0	428	756	960		12:15	22.2	39	24.4	49	23.9	51	23.9	49
	0	425	755	953		12:45	22.2	39	24.4	49	24.4	49	24.4	52
						13:15	22.2	42	24.4	49	24.4	49	24.4	52
						13:40	22.2	42	24.4	49	24.4	49	24.4	52
29-Jul-88	0	395	897	918		8:10	22.2	50	22.8	54	22.2	57	22.8	54
	0	411	832	998		8:40	22.2	46	22.8	54	22.2	54	24.4	49
	0	423	812	1001		9:10	22.2	46	23.3	51	22.8	58	23.3	54
	0	420	771	1009		9:40	22.2	50	23.3	54	23.3	54	23.9	55
	0	407	768	998		10:21	22.8	54	23.9	55	23.3	58	24.4	56
	0	406	787	1002		10:40	22.8	54	23.9	55	23.3	58	24.4	56
	0	410	792	997		11:20	23.3	51	24.4	52	23.9	59	24.4	56
	0	406	792	998		11:45	23.3	51	24.4	56	23.9	59	24.4	59
	0	408	803	997		12:25	24.4	49	24.4	52	24.4	56	24.4	59
	0	414	813	998		12:40	23.9	48	24.4	52	24.4	56	24.4	59
						13:29	23.9	48	24.4	56	24.4	56	24.4	59
						13:38	23.9	48	24.4	56	24.4	56	24.4	59
30-Jul-88	0	410	795	995		7:00	21.1	44	21.7	57	21.7	57	22.2	57
	0	417	778	991		7:30	21.1	44	22.2	53	22.2	57	22.8	54
	0	407	753	992		8:00	21.7	41	22.8	54	22.8	54	23.3	54
	0	410	747	991		8:30	21.7	41	22.8	54	23.3	54	23.3	54

INHALATION EXPOSURE RECORD

Date: 30-Jul-88
Compound: Ethylene Glycol Monopropyl Ether
Density: 0.913 g/mL
Molecular Wt: 104.15 g/mole

HAEL No: 88-0017
Acc. No: 907124
Study No: 880017T4

GENERATOR PARAMETERS:

Start Time: 6:30 End Time: 12:30

CHAMBER:	C-01	C-02	C-03	C-04
Feed Flow (Lpm)	24	42	40	61
Dilution Flow	0	0	0	0
Temperature (C)	22	88	108	136/107
VARIAC Voltage	///////	100	95	105/100
NOMINAL Start	///////	1000	2000	2000
End	///////	240	410	70
CONSUMPTION (mL)	///////	754	1578	1915

CHAMBER PARAMETERS:

Animal In Time: 6:22 Out Time: 13:05

CHAMBER:	C-01	C-02	C-03	C-04
Group	1	2	3	4
Target (ppm)	0	400	800	1000
Delta P	0.052	0.105	0.105	0.117
(L/min)	840	840	840	840
Static *	-0.5	-0.5	-0.5	-0.5
HEPA *	0.33	0.60	0.55	0.50
Charcoal *	0.00	0.08	0.05	0.03

* inches H_2O

MIRAN OUTPUT & CHAMBER CONCENTRATION:

CHAMBER	C-01	C-02	C-03	C-04
Group	1	2	3	4
(ppm)	0	400	800	1000
	0	410	795	995
	0	417	778	991
	0	407	753	992
	0	410	747	991
	0	407	780	998
	0	404	783	995
	0	410	789	993
	0	407	793	994
	0	407	807	989
	0	406	823	988
	0	408	847	851 [1]
MEAN:	0	408	791	980
SD :	0.0	3.3	28.7	42.7
n :	11	11	11	11

CHAMBER TEMPERATURE & RELATIVE HUMIDITY:

CHAMBER:	C-01	C-01	C-02	C-02	C-03	C-03	C-04	C-04
Group	1	1	2	2	3	3	4	4
TIME	T	RH	T	RH	T	RH	T	RH
7:00	21.1	44	21.7	57	21.7	57	22.2	57
7:30	21.1	44	22.2	53	22.2	57	22.8	54
8:00	21.7	41	22.8	54	22.8	54	23.3	54
8:30	21.7	41	22.8	54	23.3	54	23.3	54
9:00	21.7	45	23.3	51	23.3	54	23.9	55
9:30	22.2	42	23.3	54	23.9	51	23.9	55
10:00	22.2	46	23.9	51	23.9	55	23.9	55
10:30	22.2	46	23.9	51	23.9	55	24.4	52
11:00	22.2	46	23.9	51	23.9	55	24.4	56
11:30	22.2	46	23.9	51	23.9	55	24.4	56
12:00	22.8	47	23.9	51	23.9	55	24.4	56
12:25	22.8	47	23.9	55	24.4	56	24.4	56
MEAN:	22.0	44.6	23.3	52.8	23.4	54.8	23.8	55.0
SD :	0.6	2.2	0.8	2.1	0.8	1.6	0.7	1.3
n :	12	12	12	12	12	12	12	12

NOMINAL CONCENTRATION:

CHAMBER:	C-01	C-02	C-03	C-04
Group	1	2	3	4
Target (ppm)	0	400	800	1000
Nominal (ppm)	0	535	1118	1358

Comments: [1] Generator pump could not reach compound in generator reservoir, because the pump line was too short. Concentration began to fall at 12:25. There was minimal effect on the inhalation exposure.

Reviewed By: Eugene Rennie, Jr
Date: 7-30-88

Accepted By: W J Krasavage
Date: 8-31-88

	0	407	780	998		9:00	21.7	45	23.3	51	23.3	54	23.9	55
	0	404	783	995		9:30	22.2	42	23.3	54	23.9	51	23.9	55
	0	410	789	993		10:00	22.2	46	23.9	51	23.9	55	23.9	55
	0	407	793	994		10:30	22.2	46	23.9	51	23.9	55	24.4	52
	0	407	807	989		11:00	22.2	46	23.9	51	23.9	55	24.4	56
	0	406	823	988		11:30	22.2	46	23.9	51	23.9	55	24.4	56
	0	408	847	851		12:00	22.8	47	23.9	51	23.9	55	24.4	56
						12:25	22.8	47	23.9	55	24.4	56	24.4	56
A - MEAN	0	399	777	953			22.0	44	23.5	52	23.2	54	23.5	54
S.D.	0	37	49	74			0.6	3	0.8	3	0.8	3	0.8	3
N	131	131	130	130			156	156	156	156	156	156	156	156
B - MEAN	0	400	779	953			22.1	44	23.5	52	23.2	54	23.6	54
S.D.	0	36	49	75			0.6	3	0.8	3	0.8	3	0.8	3
N	132	132	131	131			156	156	156	156	156	156	156	156
A+B - MEAN	0	400	778	955			22.0	43.9	23.5	51.7	23.2	54.2	23.6	53.7
S.D.	0	35	48	72			0.6	3.1	0.8	2.5	0.8	2.7	0.8	2.9
N	142	142	141	141			168	168	168	168	168	168	168	168

INHALATION EXPOSURE RECORD

ate: 17-Jul-88
Compound: Ethylene Glycol Monopropyl Ether
Density: 0.913 g/mL
Molecular Wt: 104.15 g/mole

HAEL No: 88-0017
Acc. No: 907124
Study No: 880017T4

GENERATOR PARAMETERS:

Start Time: 6:25 End Time: 12:25

CHAMBER:	C-01	C-02	C-03	C-04
Feed Flow (Lpm)	24	42	40	61
Dilution Flow	0	0	0	0
Temperature (C)	21	88	73	121
VARIAC Voltage	///////	100	90	110/95
NOMINAL Start	///////	1000	2000	2000
End	///////	230	320	120
CONSUMPTION (mL)	///////	764	1667	1866

CHAMBER PARAMETERS:

Animal In Time: 6:18 Out Time: 12:55

CHAMBER:	C-01	C-02	C-03	C-04
Group	1	2	3	4
Target (ppm)	0	400	800	1000
Delta P	0.055	0.112	0.11	0.112
(L/min)	840	840	840	840
Static *	-0.5	-0.5	-0.5	-0.5
HEPA *	0.35	0.62	0.60	0.50
Charcoal *	0.00	0.08	0.05	0.02

* inches H_2O

MIRAN OUTPUT & CHAMBER CONCENTRATION

CHAMBER	C-01	C-02	C-03	C-04
Group	1	2	3	4
(ppm)	0	400	800	1000
	0	335	768	985
	0	375	755	967
	0	385	715	969
	0	395	724	969
	0	396	773	973
	0	407	772	979
	0	406	771	989
	0	410	792	991
	0	412	830	992
	0	415	795	973
MEAN:	0	394	770	979
SD :	0.0	24.2	33.6	9.8
n :	10	10	10	10

CHAMBER TEMPERATURE & RELATIVE HUMIDITY

CHAMBER:	C-01	C-01	C-02	C-02	C-03	C-03	C-04	C-04
Group	1	1	2	2	3	3	4	4
TIME	T	RH	T	RH	T	RH	T	RH
7:00	21.1	52	21.7	57	21.7	60	22.2	61
7:30	21.1	48	22.8	54	22.2	57	22.8	58
8:00	21.1	48	22.8	54	22.2	57	23.3	54
8:30	21.1	48	23.3	51	22.8	54	23.3	54
9:00	21.7	45	23.3	51	22.8	58	23.3	58
9:30	21.7	41	23.3	54	22.8	58	23.3	58
10:00	21.7	41	23.3	54	22.8	58	23.9	55
10:30	21.7	45	23.3	54	23.3	54	23.9	55
11:00	21.7	41	23.3	54	23.3	54	23.9	55
11:30	21.7	41	23.3	54	23.3	54	23.9	55
12:00	21.7	41	23.3	54	23.3	54	23.9	55
12:30	21.7	41	23.3	54	23.3	54	23.9	55
MEAN:	21.5	44.3	23.1	53.8	22.8	56.0	23.5	56.1
SD :	0.3	3.9	0.5	1.5	0.5	2.2	0.5	2.2
n :	12	12	12	12	12	12	12	12

NOMINAL CONCENTRATION

CHAMBER:	C-01	C-02	C-03	C-04
Group	1	2	3	4
Target (ppm)	0	400	800	1000
Nominal (ppm)	0	542	1182	1322

Comments:

eviewed By: Eugene Rennes, Jr.
Date: 7-18-88

Accepted By: Gary Katz
Date: 7-25-88

INHALATION EXPOSURE RECORD

Date: 18-Jul-88
Compound: Ethylene Glycol Monopropyl Ether
Density: 0.913 g/mL
Molecular Wt: 104.15 g/mole

HAEL No: 88-0017
Acc. No: 907124
Study No: 880017T4

GENERATOR PARAMETERS:

Start Time: 8:00 End Time: 14:00

CHAMBER:	C-01	C-02	C-03	C-04
Feed Flow (Lpm)	24	42	40	61
Dilution Flow	0	0	0	0
Temperature (C)	21	66	99	133/101
VARIAC Voltage	///////	100	90	105/60
NOMINAL Start	///////	1000	2000	2100
End	///////	245	100	275
CONSUMPTION (mL)	///////	749	1886	1811

CHAMBER PARAMETERS:

Animal In Time: 7:52 Out Time: 14:30

CHAMBER:	C-01	C-02	C-03	C-04
Group	1	2	3	4
Target (ppm)	0	400	800	1000
Delta P	0.055	0.112	0.11	0.112
(L/min)	840	840	840	840
Static *	-0.5	-0.5	-0.5	-0.5
HEPA *	0.35	0.63	0.60	0.50
Charcoal *	0.00	0.08	0.04	0.02

* inches H_2O

MIRAN OUTPUT & CHAMBER CONCENTRATION

CHAMBER	C-01	C-02	C-03	C-04
Group	1	2	3	4
(ppm)	0	400	800	1000
	0	362	693	987
	0	375	706	1012
	0	379	745	988
	0	385	794	976
	0	383	827	969
	0	387	816	977
	0	379	713	916
	0	379	842	923
	0	377	957	920
	0	381	882	916
MEAN:	0	379	797	958
SD :	0.0	6.7	85.0	36.0
n :	10	10	10	10

CHAMBER TEMPERATURE & RELATIVE HUMIDITY

CHAMBER:	C-01	C-01	C-02	C-02	C-03	C-03	C-04	C-04
Group	1	1	2	2	3	3	4	4
TIME	T	RH	T	RH	T	RH	T	RH
8:30	20.6	47	21.7	57	21.7	60	21.7	60
9:00	21.1	44	22.2	57	22.2	57	22.2	57
9:30	21.1	44	22.8	54	22.8	58	22.8	58
10:00	21.7	45	23.3	51	23.3	54	23.3	54
10:30	21.7	45	23.3	54	23.3	58	23.3	54
11:00	21.7	45	23.3	54	23.9	55	23.3	58
11:30	21.7	45	23.9	51	23.9	55	23.9	55
12:00	22.2	42	23.9	55	23.9	55	23.9	55
12:30	22.2	46	23.9	55	23.9	59	23.9	55
13:05	22.2	46	24.4	52	24.4	56	24.4	56
13:30	22.2	46	24.4	52	24.4	56	24.4	56
13:55	22.2	50	24.4	52	24.4	56	24.4	56
MEAN:	21.7	45.4	23.5	53.7	23.5	56.6	23.5	56.2
SD :	0.5	1.9	0.9	2.1	0.9	1.8	0.9	1.8
n :	12	12	12	12	12	12	12	12

NOMINAL CONCENTRATION:

CHAMBER:	C-01	C-02	C-03	C-04
Group	1	2	3	4
Target (ppm)	0	400	800	1000
Nominal (ppm)	0	531	1336	1284

Comments: High concentration in Group 3 (957 ppm) was due to a puddle, which developed in the catch flask.

Consumption corrected for thermal expansion.

Reviewed By: Eugene Gennaro
Date: 7-18-88

Accepted By: Gary Katz
Date: 7-25-88

INHALATION EXPOSURE RECORD

Date: 19-Jul-88
Compound: Ethylene Glycol Monopropyl Ether
Density: 0.913 g/mL
Molecular Wt: 104.15 g/mole

HAEL No: 88-0017
Acc. No: 907124
Study No: 880017T4

GENERATOR PARAMETERS:

Start Time: 7:45 End Time: 13:45

CHAMBER:	C-01	C-02	C-03	C-04
Feed Flow (Lpm)	24	42	40	61
Dilution Flow	0	0	0	0
Temperature (C)	22	85	84	74/80
VARIAC Voltage	///////	100	90	110/95
NOMINAL Start	///////	1050	2000	2000
End	///////	270	140	200
CONSUMPTION (mL)	///////	774	1846	1786

CHAMBER PARAMETERS:

Animal In Time: 7:42 Out Time: 14:20

CHAMBER:	C-01	C-02	C-03	C-04
Group	1	2	3	4
Target (ppm)	0	400	800	1000
Delta P	0.055	0.112	0.11	0.112
(L/min)	840	840	840	840
Static *	-0.5	-0.5	-0.5	-0.5
HEPA *	0.35	0.62	0.57	0.50
Charcoal *	0.00	0.08	0.05	0.03

* inches H_2O

MIRAN OUTPUT & CHAMBER CONCENTRATION:

CHAMBER	C-01	C-02	C-03	C-04
Group	1	2	3	4
(ppm)	0	400	800	1000
	0	297	710	904
	0	372	753	925
	0	381	787	912
	0	371	756	925
	0	381	770	942
	0	398	758	933
	0	399	758	931
	0	409	759	943
	0	420	762	952
	0	415	761	948
	0	111	764	946
MEAN:	0	359	758	933
SD :	0.0	88.8	18.3	15.1
n :	11	11	11	11

CHAMBER TEMPERATURE & RELATIVE HUMIDITY:

CHAMBER:	C-01	C-01	C-02	C-02	C-03	C-03	C-04	C-04
Group	1	1	2	2	3	3	4	4
TIME	T	RH	T	RH	T	RH	T	RH
8:15	21.7	49	22.2	57	21.7	60	22.2	57
8:45	21.7	45	22.8	54	22.2	57	22.2	57
9:15	21.7	45	23.3	51	22.8	54	23.3	54
9:45	21.7	45	23.3	51	23.3	51	23.3	54
10:15	21.7	45	23.9	51	23.3	54	23.3	54
10:45	22.2	42	23.9	51	23.3	54	23.9	55
11:15	21.7	45	23.9	51	23.9	51	23.9	51
11:45	22.2	42	23.9	51	23.9	51	23.9	51
12:15	22.2	42	23.9	51	23.9	55	23.9	55
12:45	22.2	42	24.4	52	23.9	55	24.4	52
13:15	22.2	42	24.4	52	23.9	55	24.4	52
13:40	22.2	46	24.4	52	23.9	55	24.4	52
MEAN:	22.0	44.2	23.7	52.0	23.3	54.3	23.6	53.7
SD :	0.3	2.2	0.7	1.8	0.7	2.6	0.8	2.1
n :	12	12	12	12	12	12	12	12

NOMINAL CONCENTRATION:

CHAMBER:	C-01	C-02	C-03	C-04
Group	1	2	3	4
Target (ppm)	0	400	800	1000
Nominal (ppm)	0	549	1308	1266

Comments: The last concentration in Group 2 was low (111 ppm). The pump supply line was too short to reach the test material in the generator reservoir.

Reviewed By: Eugene Penner, Jr.
Date: 7-19-88

Accepted By: Gary Katz
Date: 7-25-88

INHALATION EXPOSURE RECORD

Date: 20-Jul-88
Compound: Ethylene Glycol Monopropyl Ether
Density: 0.913 g/mL
Molecular Wt: 104.15 g/mole

HAEL No: 88-0017
Acc. No: 907124
Study No: 880017T4

GENERATOR PARAMETERS:

Start Time: 7:40 End Time: 13:40

CHAMBER:	C-01	C-02	C-03	C-04
Feed Flow (Lpm)	24	42	40	61
Dilution Flow	0	0	0	0
Temperature (C)	21	83	82	98/81
VARIAC Voltage	///////	95	95	105/60
NOMINAL Start	///////	1000	2000	2000
End	///////	170	370	170
CONSUMPTION (mL)	///////	824	1618	1816

CHAMBER PARAMETERS:

Animal In Time: 7:30 Out Time: 14:10

CHAMBER:	C-01	C-02	C-03	C-04
Group	1	2	3	4
Target (ppm)	0	400	800	1000
Delta P	0.055	0.112	0.11	0.112
(L/min)	840	840	840	840
Static *	-0.5	-0.5	-0.5	-0.5
HEPA *	0.35	0.62	0.57	0.50
Charcoal *	0.00	0.08	0.05	0.03

* inches H_2O

MIRAN OUTPUT & CHAMBER CONCENTRATION:

CHAMBER	C-01	C-02	C-03	C-04
Group	1	2	3	4
(ppm)	0	400	800	1000
	0	389	860	913
	0	437	883	947
	0	426	846	961
	0	427	814	956
	0	432	793	958
	0	431	743	958
	0	432	778	966
	0	425	742	961
	0	415	756	962
	0	405	729	954
MEAN:	0	422	794	954
SD :	0.0	14.7	54.3	15.1
n :	10	10	10	10

CHAMBER TEMPERATURE & RELATIVE HUMIDITY:

CHAMBER:	C-01	C-01	C-02	C-02	C-03	C-03	C-04	C-04
Group	1	1	2	2	3	3	4	4
TIME	T	RH	T	RH	T	RH	T	RH
8:00	21.1	46	21.7	53	21.1	56	21.1	60
8:30	21.1	48	22.2	53	21.7	57	22.2	53
9:00	21.7	49	22.8	50	22.2	53	22.8	54
9:35	21.7	49	23.3	51	22.8	54	22.8	58
10:00	22.2	42	23.3	51	23.3	51	23.3	54
10:30	22.2	42	23.3	51	23.3	51	23.3	54
11:00	22.2	46	23.3	51	23.3	54	23.3	54
11:30	22.2	46	23.9	51	23.3	54	23.9	55
12:00	22.8	47	23.9	51	23.3	58	23.9	55
12:30	22.8	47	23.9	51	23.9	55	24.4	52
13:00	23.3	47	24.4	52	23.9	55	24.4	52
13:30	23.3	47	24.4	52	23.9	55	24.4	56
MEAN:	22.2	46.3	23.4	51.4	23.0	54.4	23.3	54.8
SD :	0.7	2.3	0.8	0.9	0.9	2.1	1.0	2.3
n :	12	12	12	12	12	12	12	12

NOMINAL CONCENTRATION:

CHAMBER:	C-01	C-02	C-03	C-04
Group	1	2	3	4
Target (ppm)	0	400	800	1000
Nominal (ppm)	0	584	1147	1287

Comments:

Reviewed By: Eugene Renner, Jr
Date: 7-20-88

Accepted By: Gary Kathy
Date: 7-25-88

INHALATION EXPOSURE RECORD

Date: 21-Jul-88
Compound: Ethylene Glycol Monopropyl Ether
Density: 0.913 g/mL
Molecular Wt: 104.15 g/mole

HAEL No: 88-0017
Acc. No: 907124
Study No: 880017T4

GENERATOR PARAMETERS:

Start Time: 7:45 End Time: 13:45

CHAMBER:	C-01	C-02	C-03	C-04
Feed Flow (Lpm)	24	42	40	61
Dilution Flow	0	0	0	0
Temperature (C)	22	84	76	94/83
VARIAC Voltage	///////	95	95	105/60
NOMINAL Start	///////	1000	2000	2000
End	///////	175	580	180
CONSUMPTION (mL)	///////	819	1409	1806

CHAMBER PARAMETERS:

Animal In Time: 7:38 Out Time: 14:10

CHAMBER:	C-01	C-02	C-03	C-04
Group	1	2	3	4
Target (ppm)	0	400	800	1000
Delta P	0.055	0.112	0.11	0.112
(L/min)	840	840	840	840
Static *	-0.5	-0.5	-0.5	-0.5
HEPA *	0.35	0.62	0.57	0.50
Charcoal *	0.00	0.08	0.04	0.03

* inches H_2O

MIRAN OUTPUT & CHAMBER CONCENTRATION:

CHAMBER	C-01	C-02	C-03	C-04
Group	1	2	3	4
(ppm)	0	400	800	1000
	0	354	824	956
	0	360	888	957
	0	418	801	960
	0	421	766	969
	0	440	759	970
	0	416	746	970
	0	433	747	968
	0	432	757	967
	0	424	764	964
	0	425	748	971
MEAN:	0	412	780	965
SD :	0.0	30.1	45.6	5.7
n :	10	10	10	10

CHAMBER TEMPERATURE & RELATIVE HUMIDITY:

CHAMBER:	C-01	C-01	C-02	C-02	C-03	C-03	C-04	C-04
Group	1	1	2	2	3	3	4	4
TIME	T	RH	T	RH	T	RH	T	RH
8:03	21.1	48	21.7	57	21.1	60	21.7	57
8:30	21.7	45	22.2	53	21.7	57	22.2	57
9:00	21.7	49	22.8	54	22.2	53	22.8	54
9:30	22.2	42	23.3	54	22.8	54	23.3	54
10:00	22.2	42	23.3	51	23.3	51	23.3	54
10:30	22.2	42	23.3	47	23.3	51	23.9	51
11:00	22.2	42	23.3	51	23.3	51	23.9	51
11:30	22.2	42	23.9	51	23.3	54	23.9	51
12:00	22.2	42	23.9	51	23.9	51	24.4	52
12:30	22.8	43	23.9	51	23.9	51	24.4	49
13:00	22.8	43	23.9	51	23.9	51	24.4	49
13:30	22.2	42	23.9	51	23.9	51	24.4	49
MEAN:	22.1	43.5	23.3	51.8	23.1	52.9	23.6	52.3
SD :	0.5	2.5	0.7	2.4	0.9	2.9	0.9	2.9
n :	12	12	12	12	12	12	12	12

NOMINAL CONCENTRATION:

CHAMBER:	C-01	C-02	C-03	C-04
Group	1	2	3	4
Target (ppm)	0	400	800	1000
Nominal (ppm)	0	580	999	1280

Comments:

Reviewed By: Eugene Rennes
Date: 7-21-88

Accepted By: Gary Katz
Date: 7-25-88

INHALATION EXPOSURE RECORD

Date: 22-Jul-88
Compound: Ethylene Glycol Monopropyl Ether
Density: 0.913 g/mL
Molecular Wt: 104.15 g/mole

HAEL No: 88-0017
Acc. No: 907124
Study No: 880017T4

GENERATOR PARAMETERS:

Start Time: 7:40 End Time: 13:40

CHAMBER:	C-01	C-02	C-03	C-04
Feed Flow (Lpm)	24	42	40	61
Dilution Flow	0	0	0	0
Temperature (C)	22	82	73	105/57
VARIAC Voltage	///////	95	95	110/60
NOMINAL Start	///////	1000	2000	2000
End	///////	195	520	170
CONSUMPTION (mL)	///////	799	1469	1816

CHAMBER PARAMETERS:

Animal In Time: 7:31 Out Time: 14:10

CHAMBER:	C-01	C-02	C-03	C-04
Group	1	2	3	4
Target (ppm)	0	400	800	1000
Delta P	0.055	0.112	0.11	0.112
(L/min)	840	840	840	840
Static *	-0.5	-0.5	-0.5	-0.5
HEPA *	0.33	0.62	0.52	0.50
Charcoal *	0.00	0.08	0.05	0.03

* inches H_2O

MIRAN OUTPUT & CHAMBER CONCENTRATION:

CHAMBER	C-01	C-02	C-03	C-04
Group	1	2	3	4
(ppm)	0	400	800	1000
	0	387	678[1]	914
	0	414	732	955
	0	405	724	962
	0	402	772	958
	0	386	762	957
	0	387	740	954
	0	398	752	953
	0	396	736	974
	0	403	766	976
MEAN:	0	398	740	956
SD :	0.0	9.5	28.5	17.8
n :	9	9	9	9

CHAMBER TEMPERATURE & RELATIVE HUMIDITY:

CHAMBER:	C-01	C-01	C-02	C-02	C-03	C-03	C-04	C-04
Group	1	1	2	2	3	3	4	4
TIME	T	RH	T	RH	T	RH	T	RH
8:15	21.1	44	22.2	53	21.7	57	22.2	53
8:40	21.7	41	22.8	50	22.2	57	22.2	57
9:10	21.7	45	23.3	51	22.8	54	22.8	54
9:40	22.2	42	23.3	51	23.3	54	23.3	54
10:10	22.2	42	23.3	51	23.3	54	23.3	54
10:40	22.2	42	23.3	51	23.3	54	23.3	54
11:10	22.2	42	23.2	51	23.3	54	23.9	51
11:40	22.2	42	23.9	48	23.9	51	23.9	51
12:10	22.2	42	23.9	51	23.9	51	23.9	51
12:40	22.2	42	23.9	51	23.9	51	23.9	51
13:10	22.2	42	23.9	51	23.9	51	23.9	51
13:35	22.2	42	23.9	48	23.9	51	23.9	51
MEAN:	22.0	42.3	23.4	50.6	23.3	53.3	23.4	52.7
SD :	0.3	1.1	0.5	1.4	0.7	2.3	0.7	2.0
n :	12	12	12	12	12	12	12	12

NOMINAL CONCENTRATION:

CHAMBER:	C-01	C-02	C-03	C-04
Group	1	2	3	4
Target (ppm)	0	400	800	1000
Nominal (ppm)	0	566	1041	1287

Comments: The program TEMP halted unexpectedly, and was restarted.

[1] Increased pump rate.

Reviewed By: Eugene Rennes Jr
Date: 7-22-88

Accepted By: Mary Kathy
Date: 8-8-88

INHALATION EXPOSURE RECORD

Date: 23-Jul-88
Compound: Ethylene Glycol Monopropyl Ether
Density: 0.913 g/mL
Molecular Wt: 104.15 g/mole

HAEL No: 88-0017
Acc. No: 907124
Study No: 88001774

GENERATOR PARAMETERS:

Start Time: 6:05 End Time: 12:05

CHAMBER:	C-01	C-02	C-03	C-04
Feed Flow (Lpm)	24	42	40	61
Dilution Flow	0	0	0	0
Temperature (C)	21	87	81	131/98
VARIAC Voltage	///////	95	90	110/95
NOMINAL Start	///////	1000	2000	2000
End	///////	30	140	60
CONSUMPTION (mL)	///////	963	1846	1925

CHAMBER PARAMETERS:

Animal In Time: 6:03 Out Time: 12:30

CHAMBER:	C-01	C-02	C-03	C-04
Group	1	2	3	4
Target (ppm)	0	400	800	1000
Delta P	0.055	0.112	0.11	0.112
(L/min)	840	840	840	840
Static *	-0.5	-0.5	-0.5	-0.5
HEPA *	0.33	0.62	0.57	0.50
Charcoal *	0.00	0.08	0.05	0.02

* inches H_2O

MIRAN OUTPUT & CHAMBER CONCENTRATION:

CHAMBER	C-01	C-02	C-03	C-04
Group	1	2	3	4
(ppm)	0	400	800	1000
	0	283	619	729 [1]
	0	367	660	789 [1]
	0	405	694	823
	0	400	725	941
	0	397	736	947
	0	401	723	954
	0	419	797	959
	0	402	805	958
	0	399	817	715 [2]
	0	420	844	281 [2]
MEAN:	0	389	742	810
SD :	0.0	40.0	73.0	210.0
n :	10	10	10	10

CHAMBER TEMPERATURE & RELATIVE HUMIDITY:

CHAMBER:	C-01	C-01	C-02	C-02	C-03	C-03	C-04	C-04
Group	1	1	2	2	3	3	4	4
TIME	T	RH	T	RH	T	RH	T	RH
6:30	21.1	44	21.7	53	21.1	56	21.7	57
7:00	21.1	48	22.2	53	21.7	57	22.2	53
7:30	21.1	44	22.8	50	22.2	53	22.2	53
8:00	21.7	45	22.8	54	22.2	57	22.8	54
8:30	21.7	45	23.3	51	22.8	54	23.3	54
9:00	21.7	45	23.3	51	22.8	54	23.3	54
9:30	21.7	45	23.3	51	22.8	54	23.3	54
10:00	22.2	42	23.3	51	22.8	54	23.9	51
10:30	22.2	42	23.3	51	22.8	54	23.9	51
11:00	21.7	45	23.3	51	22.8	58	23.9	51
11:30	22.2	42	23.9	51	23.3	54	23.3	54
12:00	22.2	42	23.9	51	23.3	54	23.3	54
MEAN:	21.7	44.1	23.1	51.5	22.6	54.9	23.1	53.3
SD :	0.4	1.8	0.6	1.2	0.6	1.6	0.7	1.7
n :	12	12	12	12	12	12	12	12

NOMINAL CONCENTRATION:

CHAMBER:	C-01	C-02	C-03	C-04
Group	1	2	3	4
Target (ppm)	0	400	800	1000
Nominal (ppm)	0	682	1308	1365

Comments: [1] Increased pump rate of all pumps.

[2] Generator malfunction. Supply air line disconnected from rotameter of one column.

Reviewed By: Eugene Reeves Jr
Date: 7-23-88

Accepted By: Gary Katz
Date: 8-8-88

INHALATION EXPOSURE RECORD

Date: 24-Jul-88
Compound: Ethylene Glycol Monopropyl Ether
Density: 0.913 g/mL
Molecular Wt: 104.15 g/mole

HAEL No: 88-0017
Acc. No: 907124
Study No: 880017T4

GENERATOR PARAMETERS:

Start Time: 6:25 End Time: 12:25

CHAMBER:	C-01	C-02	C-03	C-04
Feed Flow (Lpm)	24	42	40	61
Dilution Flow	0	0	0	0
Temperature (C)	22	87	77	130/90
VARIAC Voltage	///////	100	100	110/100
NOMINAL Start	///////	1000	2000	2000
End	///////	260	400	170
CONSUMPTION (mL)	///////	734	1588	1816

CHAMBER PARAMETERS:

Animal In Time: 6:22 Out Time: 12:55

CHAMBER:	C-01	C-02	C-03	C-04
Group	1	2	3	4
Target (ppm)	0	400	800	1000
Delta P	0.052	0.105	0.105	0.117
(L/min)	840	840	840	840
Static *	-0.5	-0.5	-0.5	-0.5
HEPA *	0.33	0.60	0.55	0.40
Charcoal *	0.00	0.08	0.04	0.03

* inches H_2O

MIRAN OUTPUT & CHAMBER CONCENTRATION:

CHAMBER	C-01	C-02	C-03	C-04
Group	1	2	3	4
(ppm)	0	400	800	1000
	0	416	825	1142
	0	466	840	961
	0	440	837	959
	0	384	805	961
	0	392	797	977
	0	386	789	973
	0	396	780	961
	0	386	819	969
	0	400	815	976
	0	391	821	974
MEAN:	0	406	813	985
SD :	0.0	27.2	19.7	55.5
n :	10	10	10	10

CHAMBER TEMPERATURE & RELATIVE HUMIDITY:

CHAMBER:	C-01	C-01	C-02	C-02	C-03	C-03	C-04	C-04
Group	1	1	2	2	3	3	4	4
TIME	T	RH	T	RH	T	RH	T	RH
6:55	21.1	48	22.2	53	21.1	60	21.7	60
7:30	21.7	45	22.8	54	22.2	57	22.8	54
8:00	21.7	45	22.8	54	22.8	54	22.8	54
8.30	22.2	42	23.3	51	22.8	54	23.3	54
9:00	22.2	42	23.3	51	22.8	58	23.3	54
9:30	22.2	42	23.9	51	23.3	54	23.9	55
10:00	22.2	42	23.9	51	23.3	54	23.9	55
10:30	22.8	43	23.9	51	23.3	51	23.9	51
11:00	22.2	39	23.9	48	23.3	51	23.9	51
11:45	22.2	39	23.9	48	23.3	51	23.9	51
12:05	22.2	39	23.9	48	23.3	58	23.9	51
12:24	22.2	42	23.9	48	23.3	58	23.9	51
MEAN:	22.1	42.3	23.5	50.7	22.9	55.0	23.4	53.4
SD :	0.4	2.7	0.6	2.3	0.7	3.1	0.7	2.7
n :	12	12	12	12	12	12	12	12

NOMINAL CONCENTRATION:

CHAMBER:	C-01	C-02	C-03	C-04
Group	1	2	3	4
Target (ppm)	0	400	800	1000
Nominal (ppm)	0	521	1125	1287

Comments:

Reviewed By: Eugene Reeves, Jr
Date: 7-24-88

Accepted By: Gary Katz
Date: 8-8-88

INHALATION EXPOSURE RECORD

Date: 25-Jul-88
Compound: Ethylene Glycol Monopropyl Ether
Density: 0.913 g/mL
Molecular Wt: 104.15 g/mole

HAEL No: 88-0017
Acc. No: 907124
Study No: 880017T4

GENERATOR PARAMETERS:

Start Time: 7:50 End Time: 13:50

CHAMBER:	C-01	C-02	C-03	C-04
Feed Flow (Lpm)	24	42	40	61
Dilution Flow	0	0	0	0
Temperature (C)	23	91	81	150/110
VARIAC Voltage	///////	100	90	110/95
NOMINAL Start	///////	1000	2000	2000
End	///////	145	480	220
CONSUMPTION (mL)	///////	849	1508	1766

CHAMBER PARAMETERS:

Animal In Time: 7:46 Out Time: 14:17

CHAMBER:	C-01	C-02	C-03	C-04
Group	1	2	3	4
Target (ppm)	0	400	800	1000
Delta P	0.052	0.105	0.105	0.117
(L/min)	840	840	840	840
Static *	-0.5	-0.5	-0.5	-0.5
HEPA *	0.32	0.60	0.55	0.50
Charcoal *	0.00	0.08	0.05	0.03

* inches H_2O

MIRAN OUTPUT & CHAMBER CONCENTRATION:

CHAMBER	C-01	C-02	C-03	C-04
Group	1	2	3	4
(ppm)	0	400	800	1000
	0	295[1]	760	964
	0	353	754	965
	0	382	819	958
	0	390	878	962
	0	408	733	970
	0	418	796	961
	0	420	805	974
	0	418	796	978
	0	415	795	970
	0	424	791	966
	0	427		
MEAN:	0	395	793	967
SD :	0.0	40.0	39.9	6.1
n :	11	11	10	10

CHAMBER TEMPERATURE & RELATIVE HUMIDITY:

CHAMBER:	C-01	C-01	C-02	C-02	C-03	C-03	C-04	C-04
Group	1	1	2	2	3	3	4	4
TIME	T	RH	T	RH	T	RH	T	RH
8:15	21.1	48	22.2	53	22.2	53	22.2	53
8:45	21.7	45	22.8	50	22.2	53	22.8	54
9:15	22.2	42	23.3	51	22.8	54	23.3	54
9:45	22.2	42	23.9	48	23.3	51	23.9	51
10:21	22.2	42	23.9	51	23.3	54	23.9	51
10:45	22.8	43	24.4	49	23.3	54	23.9	51
11:15	22.8	43	24.4	49	23.3	54	24.4	49
11:45	22.8	40	24.4	49	23.9	51	24.4	49
12:15	22.8	40	24.4	49	23.9	51	24.4	49
12:45	22.8	40	24.4	49	23.9	51	24.4	52
13:15	22.8	40	24.4	49	24.4	49	24.4	49
13:43	22.8	40	24.4	49	24.4	52	24.4	52
MEAN:	22.4	42.1	23.9	49.7	23.4	52.3	23.9	51.2
SD :	0.6	2.5	0.8	1.4	0.7	1.7	0.7	1.9
n :	12	12	12	12	12	12	12	12

NOMINAL CONCENTRATION:

CHAMBER:	C-01	C-02	C-03	C-04
Group	1	2	3	4
Target (ppm)	0	400	800	1000
Nominal (ppm)	0	601	1069	1252

Comments: [1] Increased generator pump rate.

Reviewed By: Eugene Renner Jr
Date: 7-26-88

Accepted By: Gary Katz
Date: 8-8-88

INHALATION EXPOSURE RECORD

Date: 26-Jul-88
Compound: Ethylene Glycol Monopropyl Ether
Density: 0.913 g/mL
Molecular Wt: 104.15 g/mole

HAEL No: 88-0017
Acc. No: 907124
Study No: 880017T4

GENERATOR PARAMETERS:

Start Time: 7:45 End Time: 13:46

CHAMBER:	C-01	C-02	C-03	C-04
Feed Flow (Lpm)	24	42	40	61
Dilution Flow	0	0	0	0
Temperature (C)	22	97	80	150/110
VARIAC Voltage	///////	100	90	110/95
NOMINAL Start	///////	1000	2000	2000
End	///////	150	400	150
CONSUMPTION (mL)	///////	844	1588	1836

CHAMBER PARAMETERS:

Animal In Time: 7:30 Out Time: 14:17

CHAMBER:	C-01	C-02	C-03	C-04
Group	1	2	3	4
Target (ppm)	0	400	800	1000
Delta P	0.052	0.105	0.105	0.117
(L/min)	840	840	840	840
Static *	-0.5	-0.5	-0.5	-0.5
HEPA *	0.35	0.60	0.55	0.50
Charcoal *	0.00	0.08	0.05	0.03

* inches H_2O

MIRAN OUTPUT & CHAMBER CONCENTRATION:

CHAMBER	C-01	C-02	C-03	C-04
Group	1	2	3	4
(ppm)	0	400	800	1000
	0	378	724	950
	0	418	701	943
	0	408	736	954
	0	413	780	961
	0	396	789	959
	0	407	800	971
	0	431	782	964
	0	428	777	960
	0	414	760	956
	0	412	780	955
MEAN:	0	410	763	957
SD :	0.0	15.2	32.3	7.6
n :	10	10	10	10

CHAMBER TEMPERATURE & RELATIVE HUMIDITY:

CHAMBER:	C-01	C-01	C-02	C-02	C-03	C-03	C-04	C-04
Group	1	1	2	2	3	3	4	4
TIME	T	RH	T	RH	T	RH	T	RH
8:00	21.1	44	21.7	57	21.1	56	21.1	60
8:30	21.1	44	22.2	53	22.2	53	22.2	57
9:00	21.7	41	22.8	54	22.2	53	22.8	54
9:30	21.7	41	23.3	51	22.8	54	23.3	51
10:00	22.2	42	23.3	51	23.3	51	23.3	51
10:30	22.2	42	23.9	48	23.3	51	23.3	54
11:00	22.2	42	23.9	48	23.3	51	23.9	51
11:30	22.2	42	23.9	48	23.3	51	23.9	51
12:00	22.2	42	24.4	49	23.3	51	23.9	51
12:30	22.2	42	24.4	49	23.3	51	23.9	51
13:00	22.8	42	24.4	49	23.3	51	24.4	49
13:30	22.2	42	24.4	45	23.9	51	24.4	49
MEAN:	22.0	42.2	23.6	50.2	22.9	52.0	23.4	52.4
SD :	0.5	0.9	0.9	3.2	0.8	1.7	1.0	3.3
n :	12	12	12	12	12	12	12	12

NOMINAL CONCENTRATION:

CHAMBER:	C-01	C-02	C-03	C-04
Group	1	2	3	4
Target (ppm)	0	400	800	1000
Nominal (ppm)	0	598	1125	1301

Comments:

Reviewed By: Eugene Rennolf
Date: 7-26-88

Accepted By: Gary Katz
Date: 8-8-88

INHALATION EXPOSURE RECORD

ate: 27-Jul-88
Compound: Ethylene Glycol Monopropyl Ether
Density: 0.913 g/mL
Molecular Wt: 104.15 g/mole

HAEL No: 88-0017
Acc. No: 907124
Study No: 880017T4

GENERATOR PARAMETERS:

Start Time: 7:45 End Time: 13:45

CHAMBER:	C-01	C-02	C-03	C-04
Feed Flow (Lpm)	24	42	40	61
Dilution Flow	0	0	0	0
Temperature (C)	22	75	88	145/118
VARIAC Voltage	///////	100	90	110/95
NOMINAL Start	///////	1000	2000	2000
End	///////	180	320	140
CONSUMPTION (mL)	///////	814	1667	1846

CHAMBER PARAMETERS:

Animal In Time: 7:35 Out Time: 14:15

CHAMBER:	C-01	C-02	C-03	C-04
Group	1	2	3	4
Target (ppm)	0	400	800	1000
Delta P	0.052	0.105	0.105	0.117
(L/min)	840	840	840	840
Static *	-0.5	-0.5	-0.5	-0.5
HEPA *	0.33	0.60	0.55	0.50
Charcoal *	0.00	0.08	0.05	0.03

* inches H_2O

MIRAN OUTPUT & CHAMBER CONCENTRATION:

CHAMBER	C-01	C-02	C-03	C-04
Group	1	2	3	4
(ppm)	0	400	800	1000
	0	381	702	986
	0	400	792	992
	0	412	818	990
	0	418	822	980
	0	420	763	971
	0	424	766	977
	0	420	705	964
	0	405	716	966
	0	398	802	971
	0	410	802	986
MEAN:	0	409	769	978
SD :	0.0	13.2	46.3	9.9
n :	10	10	10	10

CHAMBER TEMPERATURE & RELATIVE HUMIDITY:

CHAMBER:	C-01	C-01	C-02	C-02	C-03	C-03	C-04	C-04
Group	1	1	2	2	3	3	4	4
TIME	T	RH	T	RH	T	RH	T	RH
7:55	21.1	44	21.1	60	21.7	57	21.1	64
8:23	21.1	41	22.2	57	22.2	53	22.2	57
8:50	21.1	44	22.8	54	22.2	57	22.8	54
9:20	21.7	41	22.2	57	22.8	54	23.3	54
9:50	21.7	45	23.3	51	23.3	51	23.3	54
10:20	21.7	45	23.9	51	23.3	51	23.9	51
10:50	22.2	42	23.9	48	23.3	58	23.9	51
11:10	22.2	42	23.9	48	23.3	58	23.9	55
11:50	22.2	39	23.9	48	23.9	51	24.4	49
12:20	22.2	39	24.4	49	23.9	51	24.4	49
12:50	22.2	39	24.4	49	23.9	55	24.4	49
13:34	22.2	39	24.4	49	23.9	55	24.4	52
MEAN:	21.8	41.7	23.4	51.8	23.1	54.3	23.5	53.3
SD :	0.5	2.4	1.1	4.2	0.8	2.8	1.0	4.3
n :	12	12	12	12	12	12	12	12

NOMINAL CONCENTRATION:

CHAMBER:	C-01	C-02	C-03	C-04
Group	1	2	3	4
Target (ppm)	0	400	800	1000
Nominal (ppm)	0	577	1182	1308

Comments:

Reviewed By: Eugene R Kennedy
Date: 7-27-88

Accepted By: Mary Katz
Date: 8-8-88

INHALATION EXPOSURE RECORD

ate: 28-Jul-88

Compound: Ethylene Glycol Monopropyl Ether
Density: 0.913 g/mL
Molecular Wt: 104.15 g/mole

HAEL No: 88-0017
Acc. No: 907124
Study No: 880017T4

GENERATOR PARAMETERS:

Start Time: 7:40 End Time: 13:40

CHAMBER:	C-01	C-02	C-03	C-04
Feed Flow (Lpm)	24	42	40	61
Dilution Flow	0	0	0	0
Temperature (C)	22	94	40	132/107
VARIAC Voltage	///////	100	90	115/100
NOMINAL Start	///////	1000	2000	2000
End	///////	200	350	160
CONSUMPTION (mL)	///////	794	1637	1826

CHAMBER PARAMETERS:

Animal In Time: 7:32 Out Time: 13:40

CHAMBER:	C-01	C-02	C-03	C-04
Group	1	2	3	4
Target (ppm)	0	400	800	1000
Delta P	0.052	0.105	0.105	0.117
(L/min)	840	840	840	840
Static *	-0.5	-0.5	-0.5	-0.5
HEPA *	0.38	0.60	0.55	0.05
Charcoal *	0.00	0.08	0.06	0.03

* inches H_2O

MIRAN OUTPUT & CHAMBER CONCENTRATION:

CHAMBER	C-01	C-02	C-03	C-04
Group	1	2	3	4
(ppm)	0	400	800	1000
	0	391	802	947
	0	377	869	945
	0	407	797	972
	0	421	780	954
	0	399	764	948
	0	419	747	951
	0	423	736	958
	0	413	759	962
	0	428	756	960
	0	425	755	953
MEAN:	0	410	776	955
SD :	0.0	16.8	38.8	8.3
n :	10	10	10	10

CHAMBER TEMPERATURE & RELATIVE HUMIDITY:

CHAMBER:	C-01	C-01	C-02	C-02	C-03	C-03	C-04	C-04
Group	1	1	2	2	3	3	4	4
TIME	T	RH	T	RH	T	RH	T	RH
8:20	21.1	41	22.2	53	22.2	53	22.2	57
8:50	21.1	41	23.3	51	22.8	54	22.8	54
9:20	21.7	45	23.3	51	23.3	51	23.3	54
9:45	22.2	42	23.9	58	23.3	51	24.4	49
10:15	22.2	42	23.9	51	23.3	51	23.9	51
10:17	22.2	42	23.9	51	23.9	48	23.9	51
11:15	22.2	42	24.4	49	23.9	51	23.9	51
11:45	22.2	39	24.4	49	23.9	51	23.9	51
12:15	22.2	39	24.4	49	23.9	51	23.9	49
12:45	22.2	39	24.4	49	24.4	49	24.4	52
13:15	22.2	42	24.4	49	24.4	49	24.4	52
13:40	22.2	42	24.4	49	24.4	49	24.4	52
MEAN:	22.0	41.3	23.9	50.8	23.6	50.7	23.8	51.9
SD :	0.4	1.7	0.7	2.6	0.7	1.7	0.7	2.2
n :	12	12	12	12	12	12	12	12

NOMINAL CONCENTRATION:

CHAMBER:	C-01	C-02	C-03	C-04
Group	1	2	3	4
Target (ppm)	0	400	800	1000
Nominal (ppm)	0	563	1161	1294

Comments:

eviewed By: Eugene Ronner, Jr
Date: 7-28-88

Accepted By: Gary Katz
Date: 8-8-88

INHALATION EXPOSURE RECORD

Date: 29-Jul-88
Compound: Ethylene Glycol Monopropyl Ether
Density: 0.913 g/mL
Molecular Wt: 104.15 g/mole

HAEL No: 88-0017
Acc. No: 907124
Study No: 880017T4

GENERATOR PARAMETERS:

Start Time: 7:40 End Time: 13:40

CHAMBER:	C-01	C-02	C-03	C-04
Feed Flow (Lpm)	24	42	40	61
Dilution Flow	0	0	0	0
Temperature (C)	23	89	107	137/97
VARIAC Voltage	///////	100	90	105/100
NOMINAL Start	///////	1000	2000	2000
End	///////	205	390	150
CONSUMPTION (mL)	///////	789	1598	1836

CHAMBER PARAMETERS:

Animal In Time: 7:33 Out Time: 14:15

CHAMBER:	C-01	C-02	C-03	C-04
Group	1	2	3	4
Target (ppm)	0	400	800	1000
Delta P	0.052	0.105	0.105	0.117
(L/min)	840	840	840	840
Static *	-0.5	-0.5	-0.5	-0.5
HEPA *	0.33	0.60	0.55	0.50
Charcoal *	0.00	0.08	0.06	0.03

* inches H_2O

MIRAN OUTPUT & CHAMBER CONCENTRATION:

CHAMBER	C-01	C-02	C-03	C-04
Group	1	2	3	4
(ppm)	0	400	800	1000
	0	395	897	918
	0	411	832	998
	0	423	812	1001
	0	420	771	1009
	0	407	768	998
	0	406	787	1002
	0	410	792	997
	0	406	792	998
	0	408	803	997
	0	414	813	998
MEAN:	0	410	807	992
SD :	0.0	7.8	37.3	26.2
n :	10	10	10	10

CHAMBER TEMPERATURE & RELATIVE HUMIDITY:

CHAMBER:	C-01	C-01	C-02	C-02	C-03	C-03	C-04	C-04
Group	1	1	2	2	3	3	4	4
TIME	T	RH	T	RH	T	RH	T	RH
8:10	22.2	50	22.8	54	22.2	57	22.8	54
8:40	22.2	46	22.8	54	22.2	54	24.4	49
9:10	22.2	46	23.3	51	22.8	58	23.3	54
9:40	22.2	50	23.3	54	23.3	54	23.9	55
10:21	22.8	54	23.9	55	23.3	58	24.4	56
10:40	22.8	54	23.9	55	23.3	58	24.4	56
11:20	23.3	51	24.4	52	23.9	59	24.4	56
11:45	23.3	51	24.4	56	23.9	59	24.4	59
12:25	24.4	49	24.4	52	24.4	56	24.4	59
12:40	23.9	48	24.4	52	24.4	56	24.4	59
13:29	23.9	48	24.4	56	24.4	56	24.4	59
13:38	23.9	48	24.4	56	24.4	56	24.4	59
MEAN:	23.1	49.6	23.9	53.9	23.5	56.8	24.1	56.3
SD :	0.8	2.6	0.6	1.8	0.8	1.7	0.5	3.0
n :	12	12	12	12	12	12	12	12

NOMINAL CONCENTRATION:

CHAMBER:	C-01	C-02	C-03	C-04
Group	1	2	3	4
Target (ppm)	0	400	800	1000
Nominal (ppm)	0	559	1132	1301

Comments:

Reviewed By: Eugene Renner Jr
Date: 7-29-88

Accepted By: W J Krasavage
Date: 8-31-88

252947S
TX-89-37

"Contains NO CBI"

A DEVELOPMENTAL TOXICITY STUDY WITH ETHYLENE GLYCOL MONOPROPYL ETHER IN THE RABBIT

Walter J. Krasavage, M.S.

Ruth S. Hosenfeld, A.A.S.

TOXICOLOGICAL SCIENCES LABORATORY
HEALTH AND ENVIRONMENT LABORATORIES
EASTMAN KODAK COMPANY
ROCHESTER, NY 14652-3615

DATE July 5, 1989

252947S
TX-89-37

A DEVELOPMENTAL TOXICITY STUDY WITH ETHYLENE GLYCOL MONOPROPYL ETHER IN THE RABBIT

ABSTRACT

Groups of pregnant New Zealand White rabbits were exposed to vapor concentrations of 0, 125, 250, or 500 ppm ethylene glycol monopropyl ether (EP) for 6 hours per day on the 6th through the 18th days of gestation to determine the potential developmental toxicity of EP. Maternal effects included a slight non-statistically significant reduction of feed consumption at the 250 and 500 ppm exposure levels and slightly reduced body weight gain at the 500 ppm level compared to the controls. One doe exposed to 500 ppm had red-colored urine during and on the day following the second exposure which was considered to be treatment-related. Hematologic determinations, absolute and relative organ weights and observations at necropsy revealed no treatment-related effects. Reproductive indices, i.e., pregnancy rate, number of corpora lutea, implantation sites, viable fetuses, early and late resorptions, fetal body weights, fetal sex ratio, and the gravid uterine and corrected body weights were not affected by exposure to EP. External, internal soft tissue and skeletal malformations occurred in single fetuses across the groups, but not in a dosed-related manner and none of the incidences of malformations were statistically significant from the controls. The occurrence of skeletal variations were, in a number of instances, less in the EP-exposed litters than in the controls. When a greater number of EP-exposed fetuses were affected, the number of litters involved was not different from the controls. Thus, vapor concentrations as high as 500 ppm were not teratogenic for the rabbit conceptus and did not produce definitive evidence of developmental toxicity.

252947S
TX-89-37

A Developmental Toxicity Study with Ethylene Glycol Monopropyl Ether in the Rabbit

PURPOSE

The purpose of the study was to assess the potential developmental toxicity of ethylene glycol monopropyl ether (EP) when administered to pregnant rabbits by the inhalation route on the 6th through the 18th days of gestation.

TESTING FACILITY

Toxicological Sciences Laboratory
Health and Environment Laboratories
Kodak Park (B 320)
Eastman Kodak Company
1100 Ridgeway Avenue
Rochester, NY 14652-3615

SPONSOR

Eastman Chemicals Division
Eastman Kodak Company
Kingsport, TN 37662

STUDY DATES

Receipt of test animals	July 12, 1988
Acclimation period	July 12 to August 15, 1988
Initiation Date	August 12, 1988
Mating period	August 15 to 23, 1988
Exposure period	August 21 to September 10, 1988
Cesarian Sections	September 13 to 21, 1988

REGULATORY COMPLIANCE

The study was conducted in accordance with the U. S. Environmental Protection Agency Good Laboratory Standards 40 CFR Part 792, November 29, 1983 and Good Laboratory Practices for Nonclinical Laboratory Studies as promulgated by the Food and Drug Administration, 21 CFR Part 58, September 4, 1987. The study was also conducted in accordance with OECD Principles of Good Laboratory Practice. The study was subjected to the quality assurance auditing procedures as set forth by the Quality Assurance Units of Eastman Kodak Company.

TEST ARTICLE CHARACTERIZATION

General Description

Test Article Name:	Ethylene Glycol Monopropyl Ether
Synonyms:	2-Propoxyethanol, EP, EGPE
CAS Number:	2807-30-9
EK Accession Number:	907124
HAEL Number:	88-0017
SRID Number:	T62-15(7-21-88)
Study Numbers:	880017T5(acclimation period) 80017T6(main study)
Source Of Test Article:	Texas Eastman Company

Physicochemical Properties

Molecular weight	104.15
Molecular formula	$C_5H_{12}O_2$
Structural formula	$C_3H_7OCH_2CH_2OH$
Boiling point	149.5° C
Melting point	below -90° C
Specific gravity	0.913
Vapor pressure	1.3 mm Hg @25° C
Flash point	49° C

Test Article Purity and Stability

Gas chromatographic analysis performed by the Kodak Park Chemical Quality Services Division (CQSD) indicated that the test article was 99.9% EP before exposure and 99.8% EP after exposure.

TEST SYSTEM

Animals

Sixty-five nulliparous, 5-6 months old, female New Zealand White rabbits were purchased from Hazleton Research Products (Dutchland), Denver, PA. The animals were examined by a veterinarian on arrival and acclimated to the laboratory for 5 weeks prior to the start of the study. Body weights were recorded at least once weekly and clinical signs were performed at least once daily during the acclimation period. Six to seven month old male rabbits of the same strain, previously ordered from the same supplier, were used as breeders. The rabbit was chosen as the test species because it is the primary non-rodent species recommended by the U. S. Environmental Protection Agency for use in developmental toxicity studies. There is much historical control data on the rabbit in the literature and the rabbit has been shown to be sensitive to the effects of known developmental toxicants.

Identification

The female rabbits were identified with a metal ear tag containing a unique number. In addition, each female was assigned an acclimation period number and a study number which were cross-referenced to its eartag number. Individual female cages were color coded according to group and had a card attached which contained the animal's eartag number, the animal's study number, the experiment number and the exposure group. Males were identified with a unique ear tag number and were used only as breeders. The males were not exposed to the test material.

Mating

Natural mating was used. The female was placed in a male's cage and the pair were observed for copulation. When coitus was observed, the female was returned to her original cage. One to two hours later, the female was placed with another male and the pair was observed for copulation. After the second mating period, the female was returned to her cage. The day of a successful copulation was designated Day 0 of gestation. The eartag numbers of the males that mated with a female and the times of copulation were recorded. In this study all females, except one, copulated with two males. The female that copulated with only one male on the day of mating was nonetheless pregnant.

Group Assignment

Ten females per day were mated on each of six days to obtain the required number of inseminated females for the study. Mated females were assigned to three test groups and a negative control group daily using a modification of the AATS computer-generated randomization program in order to place an equal number of animals in each group and equalize, as closely as possible, the group mean body weights.

TEST SYSTEM (Con't)

Husbandry

The animals were housed individually,(except during mating) in stainless steel rabbit cages with wire mesh floors and a stainless steel sub-floor pan to catch urine and feces. Certified Rabbit Diet (Agway® Prolab™ High Fiber Rabbit Formula) and municipal tap water (Monroe County Water Authority), via an automated watering system, were available ad libitum. No known contaminants were present in the feed or the water that would interfere with the outcome of the study. Room temperature and relative humidity were controlled at approximately 70 ± 3° F and 30-70 %, respectively. A photocycle of 12 hours light (6 am - 6 pm)/dark was maintained.

STUDY DESIGN

Treatment Groups and Test Article Administration

Mated females were assigned to three treatment groups and a negative control group of fifteen rabbits each. The treatment groups were exposed to vapor concentrations of 125, 250, or 500 ppm of EP by inhalation for 6 hours per day on Days 6 through 18 of gestation (13 exposures). These exposure levels were selected on the basis of data from a developmental toxicity probe study with EP. The negative control group was handled similar to the EP-treated groups except that exposure was to air only. The inhalation route was chosen since it is a route of potential human exposure.

Exposure Conditions

Whole body inhalation exposures were conducted in 4.2 m^3 stainless steel and glass inhalation chambers that were maintained under negative pressure (about 0.5" water) with approximately 12 air changes per hour. Distribution of the test material had been determined prior to conducting the probe study by measuring the vapor concentration of EP at key cage positions throughout each chamber. The test material (liquid) was metered with an FMI Fluid Metering pump (Fluid Metering Inc., Oyster Bay, NY) into a glass bead-packed column where it vaporized and was conducted to the inhalation chamber. EP vapors were quantitated by infrared spectroscopy and chamber vapor concentration was monitored at a fixed reference position at least six times during each exposure. The control chamber was set up similar to the EP chambers except that exposure was to filtered air only. Chamber temperature, relative humidity, and airflow rate were monitored every half hour during exposure. Chamber airflow rate was calibrated weekly and nominal concentrations were determined daily. The concentration of background nongaseous material was measured daily in the highest concentration chamber relative to the air control chamber to ensure that exposures were to a vapor and not an aerosol.

STUDY DESIGN (Con't)

Maternal Clinical Signs

The females were observed, by cageside observation, for obvious clinical signs of toxicity twice daily (except week-ends) on non-treatment days. On days of treatment (Days 6-18 of gestation), observations were made prior to and after exposure. Animals visible through the chamber windows were observed periodically for clinical signs of toxicity during the exposure period. A detailed examination including, but not limited to, examination of the hair, skin, eyes, general activity, feces, and urine, was conducted on each female on the days body weights were recorded.

Maternal Body Weights

Individual body weights were recorded for each female on gestation Days 0, 6, 9, 12, 15, 19, 22, and 28. Body weight gain was calculated from Days 0-6, 6-9, 9-12, 12-15, 15-19, 19-22, 22-28, 6-19, and 0-28 of gestation.

Maternal Feed Consumption

Feed containers were weighed on the days body weights were recorded and at other times when feed needed to be added. Mean and individual feed consumption is reported for all groups on Days 0-5, 5-6, 6-9, 9-12, 12-15, 15-19, 19-22, and 22-28 of gestation.

POSTMORTEM EVALUATIONS

Maternal

All animals that survived to scheduled sacrifice were fasted overnight and anesthetized by CO_2 inhalation on Day 29 of gestation. The abdominal viscera were exposed by a mid-line incision through the abdominal wall. Blood for hematologic determinations was collected via the inferior vena cava and the animals were exsanguinated by severing the inferior vena cava. The terminal body weights were recorded and gravid uteri, with ovaries attached, were removed and weighed. The ovaries were dissected free, trimmed of extraneous tissue and the corpora lutea of pregnancy were counted and recorded. The uteri of apparently nonpregnant females were stained with a 10% solution of sodium sulfide and examined for the presence of implantation sites. The thoracic cavity was opened and a necropsy examination of the thoracic and abdominal viscera was conducted in situ on each female. The liver, kidneys, spleen, and thymus were removed, trimmed of extraneous tissue, and weighed for organ/body weight comparisons. Samples of these organs were preserved in 10% neutral buffered formalin. Histologic examination of these tissues was not performed. Hematologic determinations consisted of total and relative white blood cell counts, total red blood cell counts, platelet counts, hematocrit, and hemoglobin concentration. Red blood cell indices were calculated.

POSTMORTEM EVALUATIONS (CON'T)

Fetal

After the gravid uterus had been weighed, the uterine horns were opened and the implantation sites were counted and categorized as: live fetus, dead fetus (no visible degeneration), late resorption (partially or fully formed fetus undergoing degeneration) or early resorption (implantation but no conceptus or placenta present). Viable fetuses were removed from the uterus beginning at each ovary and proceeding to the vagina. Each fetus was blotted dry on absorbent material, examined for external abnormalities and weighed. All fetuses were examined for internal soft tissue malformations and variations using a microdissection procedure. Following internal examination, the viscera were removed from the thoracic and abdominal cavities and discarded. Eviscerated fetuses were skinned and processed for staining with alizarin red dye to be examined for skeletal malformations and variations. As the skin of the head was being removed, the eyes were evaluated grossly for obvious abnormalities. Development of the brain was evaluated by making a transverse cut, with a razor blade, through the cerebral hemispheres just posterior to the frontal-parietal suture . Prematurely delivered pups and fetuses were examined externally and, if abnormalities were found, they were perserved intact in 10% neutral buffered formalin. Late resorptions were examined grossly and only those with abnormalities were saved in 10% neutral buffered formalin.

STATISTICAL ANALYSES

Statistical analyses compared the EP-treated groups to the control group. Incidence data were analyzed using Chi Square tables and Fisher's Exact Test when Chi Square was significant ($p \leq 0.05$). Continuous data was analyzed using a one-way analysis of variance and Duncan's Multiple Range Test when the "F" value was significant ($p \leq 0.05$). Bartlett's Test was used to test the equality of variances ($p \leq 0.01$) and Freeman-Tukey transformations were performed where appropriate, though the data are presented untransformed. All analyses are two-tailed tests.

KEY STUDY PERSONNEL

Walter J. Krasavage, M.S.	Study Director
Ruth S. Hosenfeld, A.A.S.	Study Technican
James F. Murphy, B.S.	Study Technican
Gordon J. Hankinson, D.V.M., M.S.	Laboratory Animal Veterinarian
M. S. Vlaovic, D.V.M., Ph.D.	Pathologist
Kenneth A. Robillard, Ph.D.	Analytical Chemist
M. Susan James, A.A.S.	Quality Assurance

The names of additional personnel are documented in the raw data.

PROTOCOL AND SOP DEVIATIONS

There were no deviations from the standard operating procedures. It is stated in the protocol that a copy of the protocol and any amendments will be included in the appendix of the report. A copy of the protocol and amendments are not included in the report, but are included with the raw data in the HAEL archives. Also, feed consumption was not calculated from day 6-16 of gestation as stated in the protocol. Neither of these deviation have any affect on the outcome of the study.

DATA STORAGE:

A copy of the final report, raw data sheets, tissues, and other non-perishable specimens will be stored in the Health and Environment Laboratories (HAEL) Archives.

RESULTS

ACCLIMATION PERIOD

Of the 65 female rabbits acquired for the study, one rabbit (# 239) had reddish-colored urine on the dropping tray on Day 12 of the 40 day acclimation period. This change was not observed during the remainder of the period and the animal gained weight and its general appearance was normal. This female mated and was randomly assigned to the control group. Occasional instances of decreased amounts of feces and urine were observed on the dropping trays of some of the animals. All females gained body weight during the acclimation period. The general appearance of all the study animals was normal during the acclimation period.

ANALYTICAL DATA

The overall mean chamber concentrations for EP were 126 ±8, 248 ±24, and 511 ±16 ppm compared to target concentrations of 125, 250, and 500 ppm. Mean nominal concentrations were 183 ±20, 379 ±29, and 503 ±25 ppm. Mean chamber temperatures were 22.3 ±0.8, 23.3 ±0.8, 23.9 ±0.8, and 23.6 ±0.8 °C and the mean chamber relative humdities during the exposure periods were 49 ±4, 52 ±3, 49 ±4, and 53 ±3 for the control, 125 ppm, 250 ppm, and 500 ppm chambers, respectively. Particle count data indicated that the exposures were to EP vapor and an EP aerosol was not present. These data indicate that the generated vapor concentrations during the study were in agreement with the chosen target concentrations and that chamber temperatures and relative humidity were within acceptable ranges. A report describing the exposure conditions is included in the Appendix beginning on page 100.

MATERNAL OBSERVATIONS

Mortality

There was no mortality during the study.

Clinical Signs

A summmary, by group, of daily clinical signs is included in the appendix beginning on page 8.

One rabbit (#459) in the 500 ppm exposure group had very dark red-discolored urine which was first noted during and following the second exposure (Day 7 of gestation). Reddish urine was also seen for this animal on Day 8 of gestation, but not for the remainder of the study. This was the only treatment related clinical sign noted. Decreased amounts of feces and urine on the dropping trays of some animals from all groups, including the controls, was seen periodically during the study.

Body Weights

The mean and individual body weights and body weight changes are included in the Appendix beginning on page 12.

There were no statistically significant differences for mean body weights or mean body weight gains between the EP-exposed does and the control does throughout the study. However, the does exposed to 500 ppm EP lost an average of 26 grams during the study (Days 0-28 of gestation) while the control does gained an average of 79 grams. During the period of exposure (Days 6-19 of gestation) the does exposed to 500 ppm lost an average of 188g, while the control does lost an average of 93g.

Feed Consumption

The mean and individual feed consumption data are included in the Appendix beginning on page 19.

There were no statistically significant differences in feed consumption between the EP-exposed groups and the control group during the study. However, the animals from the intermediate and the high-exposure groups consumed slightly less feed during the first week of exposure (gestation days 6-12) than the control group.

Hematology

The mean and individual hematologic determinations are included in the Appendix beginning on page 23.

Mean total white blood cell counts, differential white blood cell counts, red blood cell counts, calculated red cell indices, and mean platelet counts were not affected by exposures to EP.

Gross Pathology

A pathology report, a summary of necropsy findings, and the individual gross pathology findings are included in the Appendix beginning on page 33.

Necropsy examinations of the does at the time of cesarian sections revealed no evidence of systemic toxicity related to EP exposures.

Organ Weights

Mean and individual absolute and relative (organ/body weight) weights are included in the Appendix beginning on page 30.

Mean absolute and relative weights of the liver, kidneys, and thymus were comparable between the EP-exposed groups and the control group. The mean absolute and relative weights of the spleen were statistically significantly increased for the females exposed to 125 ppm EP, but the weights for the 250 and 500 ppm groups were comparable to the controls.

OBSERVATIONS AT THE TIME OF CESARIAN SECTIONS

Observations at the time of cesarian sections are summarized in Table 1. Individual litter data are included in the Appendix beginning on page 44.

Pregnancy rates were comparable between the EP-treated groups and the control group. One doe (Rabbit #424) delivered a litter prior to the scheduled day for cesarian section (Day 29 of gestation) on Day 28 of gestation. None of the does aborted. The mean number of corpora lutea, implantation sites, viable fetuses, early and late resorptions, and dead fetuses were comparable between the EP-exposed groups and the control group. The pre- and post-implantation losses did not differ statistically between the control and EP-exposed groups. Mean corrected body weights (terminal body weight minus gravid uterine weight), mean gravid uterine weights, and the mean fetal body weights (sexes combined and for male or female fetuses separately) were comparable between EP-exposed groups and the control group. The sex ratio of the fetuses appeared to be unaffected by exposure to EP.

FETAL OBSERVATIONS

External Examinations

A summary of the external malformations and variations is presented in Table 2. The individual data are included in the Appendix beginning on page 52.

FETAL OBSERVATIONS (Con't)

One control fetus (litter #403) had eye bulges which were somewhat more prominent than normal and the head was dome-shaped. Another control fetus (litter #411) had a small hematoma on the right hind leg. At 125 ppm, one fetus had prominent eye bulges (litter #420). At 250 ppm, one fetus had a malrotated right shoulder and a hematoma on the left foreleg (litter #431) and another fetus from the same litter had prominent eye bulges and a dome-shaped head. One fetus from another 250 ppm litter (#439) had two small hematomas on the occipital region of the head. One fetus from a 500 ppm EP-exposed litter (#449) had a dome-shaped head and a hematoma on the head. One fetus from another litter (#459) exposed to 500 ppm EP had unilateral microphthalmia, while another fetus from the same litter had unilateral arthrogryposis. When examined internally, none of the fetuses with dome-shaped heads had hydrocephaly. The microphthalmia and arthrogryposis were considered to be spontaneous occurrences. The incidence of fetuses or litters with individual anomalies and the incidence of total external anomalies did not differ statistically among the control and EP-treated groups.

Internal Soft Tissue Examination

A summary of the internal examinations for soft tissue anomalies is presented in Table 3. The individual data are included in the Appendix beginning on page 66

Malformations were seen in one control litter (#411) and two 125 ppm EP litters (#420 and #421). One control fetus had an interventricular defect in the heart. One 125 ppm fetus had slightly dilated lateral ventricles of the brain, indicative of slight hydrocephaly, and another 125 ppm fetus, the smallest of the litter, had a flabby heart with no apparent ventricular septum. The left kidney of this fetus was smaller than normal and was located low in the groin area rather than in its normal position. The fetus also had smaller than normal spleen, gallbladder, thymus, and lungs. The postcaval lobe of the lungs was absent, the liver was dark and enlarged and there was an accumulation of fluid in the abdominal cavity.

Other findings in the control and 125 ppm groups and all changes seen in the 250 ppm and 500 ppm groups were variations usually seen in treated and control animals in rabbit developmental toxicity studies. These variations consisted of petechial hemorrhage of the thymus gland, seal heart, flabby or globular hearts, absent inominate arteries, missing postcaval lobes of the lungs, atelectesis, dilated renal pelves, and smaller than normal spleens. The malformations seen were considered spontaneous occurrences. The frequency of the individual variations was not dose-related and was not statistically different from the controls. The incidence of total internal soft tissue anomalies did not differ statistically between the control and EP-exposed fetuses and the incidence of litters with an affected fetus was comparable among the groups.

FETAL OBSERVATIONS (Con't)

Skeletal Examinations

A summary of the skeletal examinations is presented in Table 4. The individual data are included in the Appendix beginning on page 66.

Of the 438 fetuses examined for skeletal defects, only 11 had changes of any significance. These were distributed among the various groups and included one fetus from one control litter (#404), three fetuses from two 125 ppm EP litters (#421,429), one fetus from one 250 ppm EP litter (#440), and six fetuses from four 500 ppm EP litters (#453, 456, 459, and 460). In the one fetus from the control group, the 7th, 8th, and 9th ribs on the left side were knobby. Two of the fetuses at 125 ppm, each from a different litter, had fused ribs. In one 125 ppm fetus, the 7th and 8th ribs on the right side were fused and the 8th thoracic arch on this side was missing and the centra was split. In the other 125 ppm fetus, the 9th and 10th ribs on the right side were fused and the 11th rib on this side was forked. The third 125 ppm fetus, (litter #421) had a bilobed second sternebra and the 3rd and 4th sternebrae were fused. Also, the 3rd cervical and 7th thoracic centra were bilobed and the 4th thoracic centrum was split.

In the 250 ppm EP group, one fetus (litter #440) had misaligned cervical arches and centra (1st- 5th) and the 1st arch with the odontoid process was split. In the 500 ppm EP group, one fetus (litter #453) had an irregularly shaped 1st sternebra and 6th cervical arch and the 6th and 7th cervical centra were misaligned. In another 500 ppm fetus (litter #453), the 6th and 7th ribs on the left side were fused at the proximal end. Two 500 ppm fetuses (litter #459) had hemicentra, and in one of these fetus, the 4th thoracic centra was irregularly shaped. One 500 ppm fetus (litter #460) had fused 4th and 5th sternebra and the 7th and 8th thoracic arches were misaligned with the 7th centra bilobed and the 8th centra missing. The 8th rib on the left side was floating. In another 500 ppm fetus from litter #460, the 5 through 7th cervical arches were misaligned, the 6th and 7th centra were out of position, and the 6th centra was smaller than normal. Also, the 1st thoracic centra and the 2nd sternebra of this fetus were irregularly shaped and all thoracic arches, with associated ribs, and the lumbar and sacral arches on the right side were slightly more caudad than those on the left side.

Other changes noted during skeletal examination in all groups were variations in the degree of ossification or the shape of the developing bones. Such changes are commonly seen in rabbit developmental toxicity studies. For all except two variations, the appearance of extra 13th ribs (unilateral or bilateral) and the absence of the 6th sternebra, the incidences of variations seen in the EP-exposed groups were comparable to or less than the incidences for the control group. The appearance of extra 13th ribs was statistically greater for the 500 ppm EP-exposed fetuses and non-ossification of the 6th sternebra was statistically greater for the 250 and 500 ppm EP-exposed fetuses compared to the control incidence. However, the number of litters with affected fetuses did not differ for either endpoint between the EP-exposed and control groups. When ossification of the 6th sternebra was present the incidence of fetuses with reduced ossification at this site was statistically less for all EP-exposed groups and the number of litters with affected fetuses was also less; reaching statistical significance for the 125 and 500 ppm exposure levels.

FETAL OBSERVATIONS (Con't)

Skeletal Examinations (Con't)

The incidence of fetuses and litters with non-ossification of the 5th sternebra was statistically less for the 500 ppm EP-exposed group and, though not statistically different, it was also less for the 250 ppm group compared to the control group. Reduced ossification of the first cervical centrum, a very common variant seen in rabbits, was seen in fewer EP-exposed fetuses than the controls ($p \leq 0.05$) and the number of litters affected were statistically less than the controls at the 125 ppm exposure level. Statistical analysis of the total number of affected fetuses per group with a skeletal malformation or variation and the total number of litters with an affected fetus revealed no differences between the EP-exposed groups and control group.

DISCUSSION

Vapor concentrations of ethylene glycol monopropyl ether as high as 500 ppm did not produce teratogenicity in pregnant rabbits exposed during the sensitive period of organogenesis. The animals exposed to 250 and 500 ppm EP ate slightly less feed during the exposure period than the control animals and the does exposed to 500 ppm gained slightly less body weight than the controls. One doe at the 500 ppm level had very dark red-colored urine during the second exposure and on the day following this exposure. Though seen in only one animal, this effect is consistent with effects of EP seen in other toxicity studies. In a repeated exposure inhalation study (11 exposures) conducted in our laboratory, hemoglobinuria was seen in male and female rats after the first or second exposure to 800 ppm EP and in male rats exposed to 400 ppm EP[1]. In a study to determine the developmental toxicity of EP in rats, red-colored urine was noted after the first and second exposures to 200, 400, and 800 ppm EP[2] and in a probe study, conducted to select exposure levels for this study, 800 ppm killed five of six pregnant rabbits and all five had dark red urine in the bladder at necropsy[3]. Thus, the red urine seen in the one animal in this study was probably treatment-related.

Maternal hematologic determinations, absolute and relative weights of the liver, kidneys, and thymus, and necropsy findings at the time of cesarian sections were comparable between the EP-exposed groups and the control group. The biological significance of the statistically significant increase in absolute and relative spleen weights for the females exposed to 125 ppm EP is uncertain, since it was not seen at the two higher exposure levels.

Reproductive indices, i.e., pregnancy rate, number of corpora lutea, implantation sites, viable fetuses, early and late resorptions, fetal body weights, fetal sex ratio, and the gravid uterine and corrected body weights were not affected by exposure to EP.

External examinations of 438 fetuses revealed two malformations. One fetus from a doe exposed to 500 ppm had unilateral microphthalmia (small eye) and one fetus from another doe exposed to this level had an abnormal flexure of one wrist. Since these changes occurred only unilaterally in one fetus each and are known to occur spontaneously in the rabbit, neither malformation was considered to be exposure-related. Variations seen externally were seen only in single fetuses and were scattered across the EP-exposed and control groups. The total number of external changes noted were comparable between the EP-exposed and control groups.

Internal soft tissue examinations of the 438 fetuses revealed three fetuses with malformations. One control fetus had an interventricular septal defect of the heart, a fetus from a doe exposed to 125 ppm also had a septal defect of the heart and one kidney was small and not in its normal position. One fetus from another doe exposed to 125 ppm had slightly dilated lateral ventricles of the brain. None of these malformations were seen at the two higher exposure levels and all were considered to be spontaneous occurrences. Statistical analyses of total internal soft tissue alterations revealed no difference between the EP-exposed groups and the control group.

DISCUSSION (Con't)

Skeletal malformations consisting of fused and forked ribs, fused sternebra, and misaligned cervical and thoracic vertebra were seen in single fetuses from all EP-exposure groups; a total of 10 fetuses in all were affected. Of three fetuses with skeletal malformations in the 125 ppm group, one was the smallest in the litter and of six affected fetuses in the 500 ppm group, one was a runt and two were from a doe that had resorbed 60% of her litter. This doe had exhibited maternal toxicity (red-colored urine) after the second exposure to EP which may have caused the resorptions and the skeletal effects seen in the fetuses. The incidence of the skeletal malformations were not dose-related and their occurrence in the EP-exposed groups was not statistically significant compared to the control group.

In most cases, the incidence of fetuses and litters with skeletal variations was not statistically different between the EP-exposed groups and the controls and, in many cases where there was statistical differences, the incidence of variations was less in the treated fetuses than in the control fetuses. The number of fetuses with reduced ossification of the first cervical centra, a common variation, was statistically significantly less than the controls for all EP-exposed groups, while the number of litters involved was statistically significantly less at the 125 ppm levels, but not different from the controls at the 250 and 500 ppm levels. The number of fetuses with an extra unilateral or pair of 13th rib(s), i.e., a rib(s) equal to or greater than one half the length of the 12th rib, was statistically significantly greater in the 500 ppm EP group compared to the control group. This is a common variation seen in the rabbit. Its occurrence was not dose-related and the number of 500 ppm EP litters with an affected fetus was not significantly different from the control group. The incidence of fetuses or litters with a unilateral or pair of rudimentary 13th rib(s), i.e., a rib(s) less than the length of the 12th rib, was comparable among the EP-exposed and control groups. Though the incidence of fetuses with a non-ossified 6th sternebra was greater in the 250 and 500 ppm EP-exposed groups, the number of litters with an affected fetus was comparable between these two groups and the controls and the incidence of fetuses and litters with a non-ossified 5th sternebra was statistically significantly less for the 500 ppm EP group compared to the control group. Reduced ossification of the 6th sternebra was seen more frequently in the control litters than the EP-exposed litters. This change was statistically significant at the 125 and 500 ppm exposure level and on the borderline of statistical significance at the 250 ppm exposure level. The number of fetuses with slightly reduced ossification of one of the many bones of the forepaws (the first metacarpal) was statistically significantly greater at the 250 and 500 ppm levels, but the number of litters involved was comparable between the EP-exposed and control groups. Statistical analyses of total skeletal alterations revealed no difference between the EP-exposed groups and the control group.

CONCLUSION

Ethylene glycol monopropyl ether produced slight maternal toxicity in pregnant rabbits exposed to vapor concentrations as high as 500 ppm during the most sensitive period of organogenesis (13 exposures). External, internal soft tissue and skeletal malformations occurred in single fetuses across the groups and not in a dose-related manner. None of the incidences of malformations were statistically significant from the controls. The occurrence of skeletal variations were, in a number of instances, less in the EP-exposed litters than in the controls and when a greater number of EP-exposed fetuses were affected the number of litters involved was not different from the controls. Thus, vapor concentrations as high of 500 ppm were not teratogenic for the rabbit conceptus and did not produce definitive evidence of developmental toxicity.

REFERENCES

1. Katz, G. V., Krasavage, W. J., and Terhaar, C. J. (1984) Comparative Acute and Subchronic Toxicity of Ethylene Glycol Monopropyl Ether and Ethylene Glycol Monopropyl Ether Acetate. Environ. Health Perspect. 57, 165-175.

2. Krasavage, W. J. and Katz G. V. (1985) Developmental Toxicity of Ethylene Glycol Monopropyl Ether in the Rat. Teratology 32, 93-102.

3. Krasavage, W. J. (1989) A Developmental Toxicity Probe Study of Ethylene Glycol Monopropyl Ether in the Rabbit. Toxicological Sciences Laboratory Report No. 252946R, TX-89-36, Health and Environment Laboratories, Eastman Kodak Company.

Ruth S. Hosenfeld, A.A.S.
Report Author
Toxicological Sciences Laboratory, HAEL

Date: 6-29-89

Walter J. Krasavage, M.S.
Study Director and Report Author
Manager, Reproductive/Developmental Toxicology
Toxicological Sciences Laboratory, HAEL

Date: 7-5-89

Douglas C. Topping, Ph.D.,
Unit Director, Mammalian Toxicology
Toxicological Sciences Laboratory, HAEL

Date: July 5, 1989

M.S. James, A.A.S
Coordinator
Quality Assurance Unit, HAEL

Date: 6/30/89

John L. O'Donoghue, V.M.D., Ph.D.
Director,
Toxicological Sciences Laboratory, HAEL

Date: 6/30/89

Q.A. INSPECTION STATEMENT
(CFR 58.35(B)(7) 792.35(B)(7) 160.35(B)(7))

STUDY: 88-0017-4 STUDY DIRECTOR: KRASAVAGE,W.J.
ACCESSION NUMBER: 907124

STUDY TYPE: DEVELOPMENTAL TOXICITY SCREEN

M. James
(AUDITOR, QUALITY ASSURANCE UNIT)

6/30/89
DATE

THIS STUDY WAS INSPECTED BY 1 OR MORE PERSONS OF THE QUALITY ASSURANCE UNIT OF THE HAEL, EASTMAN KODAK COMPANY, ROCHESTER, N.Y. AND WRITTEN STATUS REPORTS WERE SUBMITTED ON THE FOLLOWING DATES:

INSPECTION DATES	PHASE(S) INSPECTED	STATUS REPORT DATES
08/15/88	TEST SYSTEMS WEIGHTS TEST SYSTEM BREEDING	
08/16/88	TEST SYSTEMS WEIGHTS TEST SYSTEM RANDOMIZATION B GROUP OF FEMALES	
08/17/88	PROTOCOL SUBMISSION	
08/18/88	PROTOCOL AMENDMENT AMENDMENT 1 INCLUDES MINOR CHANGES TO STUDY DESIGN AND TEST ARTICLE CHARACTERIZATION.	
08/22/88	TEST SYSTEMS WEIGHTS CHAMBER CONCENTRATION ANALYSIS MIRAN 1 POINT CALIBRATION ENVIRONMENTAL CONTROL SYSTEMS INSPECTION	
08/23/88	TEST SYSTEM BREEDING F GROUP OF FEMALES MATED	
09/07/88	TEST SYSTEMS WEIGHTS FEEDER WEIGHTS DAY 15 WEIGHTS FOR F GROUP OF FEMALES DAY 22 WEIGHTS FOR B GROUP OF FEMALES	
09/14/88	NECROPSY CAESAREAN SECTIONS EVISCERATION OF FETUSES FOR SKELETAL PROCESSING SOFT TISSUE EXAMINATION OF FETUSES COUNT IMPLANTATION SITES COUNT CORPORA LUTEA SEX DETERMINATION OF FETUSES	
10/12/88	PROCESSING OF FETUSES FOR SKELETAL EXAMINATION SOLUTION PREPARATION	
11/02/88	SKELETAL EXAMINATION OF FETUSES	11/02/88
06/20/89	FINAL REPORT REVIEW	
06/21/89	FINAL REPORT REVIEW	
06/22/89	FINAL REPORT REVIEW	
06/23/89	FINAL REPORT REVIEW	06/23/89

TABLE 1

SUMMARY OF OBSERVATIONS COLLECTED AT TIME OF CESARIAN SECTION

HAEL NO. 88-0017 ACCESSION NO. 907124 EXPERIMENT NO. 88001716
START DATE: 15-AUG-88 ROUTE: INHALATION REPORT DATE: 10-AUG-89

	DOSE GROUP (PPM) 0.000	125.000	250.000	500.000
# Females Mated	15	15	15	15
# Females Pregnant (%)	15 (100)	15 (100)	12 (80)	14 (93)
# Pregnancies Aborted	0	0	0	0
# Premature Births	0	1	0	0
# Litters with Viable Fetuses	15	14	12	14
# Litters Completely Resorbed	0	0	0	0
# Corpora Lutea	139	133	114	139
Mean ± SD	9.3± 1.4	9.5± 1.8	9.5± 1.6	9.9± 1.7
# Implantations	135	121	105	124
Mean ± SD	9.0± 2.2	8.6± 3.2	8.7± 2.3	8.9± 2.4
% Pre-Implantation Loss (A)	4.4± 17.2	11.7± 24.3	10.3± 13.2	12.3± 17.0
# Viable Fetuses	126	107	97	107
Mean Litter Size ± SD	8.4± 2.2	7.6± 2.9	8.1± 2.2	7.6± 2.5
# Resorptions	9	13	8	17
Mean ± SD	0.6± 0.8	0.9± 1.2	0.7± 1.2	1.2± 1.6
# Dead Fetuses	0	1	0	0
Mean ± SD	0.0± 0.0	0.1± 0.3	0.0± 0.0	0.0± 0.0
% Post-Implantation Loss (B)	6.4± 8.7	10.3± 14.8	7.2± 11.3	13.0± 16.1
Mean Fetal Body Weight (g) (C)	39.7± 7.7	42.0± 5.6	38.9± 8.2	37.4± 5.8
Male Body Weight (g) (C)	40.0± 7.8	42.3± 4.8	40.2± 8.3	38.8± 5.9
Female Body Weight (g) (C)	38.4± 6.7	40.9± 6.4	37.5± 7.9	36.3± 6.9
Mean Sex Ratio (M:F)	50: 50	51: 49	54: 46	44: 56
Gravid Uterine Weight (g) (D)	473.1±119.1	463.9±147.8	456.3±116.1	407.2± 98.2
Corrected Body Weight (g) (D)	3578±255.1	3576±187.4	3536±354.0	3577±340.1

(A) $\frac{\text{(No. of corpora lutea - No. implantations) x 100}}{\text{No. of corpora lutea}}$ calculated for each litter and averaged

(B) $\frac{\text{(No. of implantations - No. of viable fetuses) x 100}}{\text{No. of implantations}}$ calculated for each litter and averaged

(C) Mean of the Litter Means ± 1 standard deviation

(D) Mean ± 1 standard deviation

ETHYLENE GLYCOL MONOPROPYL ETHER DEVELOPMENTAL TOXICITY STUDY

Summary of External Malformations/Variations

	Exposure Concentration (ppm)			
	0	125	250	500
No. Fetuses (Litters)	126 (15)	108 (14)	97 (12)	107 (14)
Microphthalmia, unilateral (M)				1 (1)
Arthrogryposis (M)				1 (1)
Eye bulges, more prominent	1 (1)*	1 (1)	1 (1)*	
Dome-shaped Head	1 (1)*		1 (1)*	1 (1)*
Hematoma(s): Head			1 (1)	1 (1)*
Limb	1 (1)		1 (1)**	
Malrotated Shoulder			1 (1)**	
TOTAL EXTERNAL ANOMALIES	2 (2)	1 (1)	3 (2)	3 (2)

M = Malformation, all other findings are variations.

* and ** Indicate that this is the same fetus.

ETHYLENE GLYCOL MONOPROPYL ETHER DEVELOPMENTAL TOXICITY STUDY

Summary of Internal Soft Tissue Malformations/Variations

	Exposure Concentration (ppm)			
	0	125	250	500
No. Fetuses (Litters)	126 (15)	108 (14)	97 (12)	107 (14)
Ventricular Septal Defect (M)	1 (1)	1 (1)		
Hydrocephalus, slight (M)		1 (1)		
Thymus:				
Petechial Hemorrhage	71 (15)	49 (13)	45 (12)	57 (14)
Smaller than Normal		1 (1)	1 (1)	
Heart:				
Seal	6 (4)	7 (6)	10 (7)	9 (6)
Flabby		3 (3)		
Globular			2 (1)	
Inominate Artery, Absent			1 (1)	4 (3)
Lungs:				
Atelectasis				2 (2)
Postcaval Lobe, Absent	1 (1)	3 (2)	3 (3)	1 (1)
Smaller than Normal		1 (1)		1 (1)
Kidneys:				
Dilated Renal Pelvis(es)	12 (6)	5 (4)	12 (8)	9 (5)
Small and Malpositioned (M)		1 (1)		
Smaller than Normal	1 (1)			

M = Malformation, all other findings are variations.

Summary of Internal Soft Tissue Malformations/Variations

	Exposure Concentration (ppm)			
	0	125	250	500
No. Fetuses (Litters)	126 (15)	108 (14)	97 (12)	107 (14)
Liver:				
Enlarged and Dark		1 (1)		
Spleen:				
Smaller than Normal	10 (8)	5 (3)	5 (2)	13 (5)
Pale			1 (1)	
Gallbladder:				
Smaller than Normal		1 (1)		2 (1)
Abdominal Cavity:				
Ascites		1 (1)	1 (1)	
TOTAL INTERNAL ANOMALIES	80 (15)	61 (13)	60 (12)	70 (14)

TABLE 4

252947S
TX-89-37

ETHYLENE GLYCOL MONOPROPYL ETHER DEVELOPMENTAL TOXICITY STUDY

Summary of Skeletal Malformations/Variations

	Exposure Concentration (ppm)			
	0	125	250	500
No. Fetuses (Litters)	126 (15)	108 (14)	97 (12)	107 (14)
SKULL BONES:				
Reduced ossification	3 (1)		1 (1)	1 (1)
Enlarged Fontanel				3 (1)
HYOID BONE:				
Reduced ossification	36 (11)	22 (6)	26 (9)	30 (7)
Not Ossified				1 (1)
Missing*			2 (1)	
Angulated	1 (1)	1 (1)	1 (1)	1 (1)
CERVICAL VERTEBRAE:				
CENTRA -				
Reduced Ossification (#1)	47 (12)	9[a] (5)[a]	23[a] (8)	25[a] (11)
Reduced Oss.(#2,3,4, or 5)				4 (3)
Not Ossified (#1)	1 (1)			
Bilobed (#1 or 3)		1 (1)	1 (1)	
Misaligned (#1-5,#6-7) (M)			1 (1)	1 (1)
Fused (M)				1 (1)
Hemicentra (M)				2 (1)
ARCHES -				
Split (#1)			1 (1)	
Misaligned (#1-5,#5-7) (M)			1 (1)	1 (1)
Irregular Shape (#6)				1 (1)
THORACIC VERTEBRAE:				
CENTRA -				
Reduced Ossification				2 (2)
Not Ossified				1 (1)
Bilobed (#5-8)		2 (2)		3 (2)
Split (#4 or 8)		2 (1)		
Irregular Shape				4 (4)
ARCHES -				
Missing (#8)		1 (1)		
Misaligned (#7-8) (M)				1 (1)

M = Malformation, all other findings are variations.

[a] The incidence of fetuses and/or litters with the variation is statistically significantly less than the control incidence, Chi Square and Fisher 's Exact Tests ($p \leq 0.05$).

[b] The incidence of fetuses and/or litters with the variation is statistically significantly greater than the control incidence, Chi Square and Fisher 's Exact Tests ($p \leq 0.05$).

* Possible mechanically damaged.

Summary of Skeletal Malformations/Variations

	Exposure Concentration (ppm) 0	125	250	500
No. Fetuses (Litters)	126 (15)	108 (14)	97 (12)	107 (14)
LUMBAR VERTEBRAE:				
Only 6 present	13 (4)	6 (3)	3 (1)	6 (3)
More than 7 present		2 (2)	3 (2)	4 (3)
RIBS:				
Fused (M)		2 (2)		1 (1)
Knobby	1 (1)			
Forked (M)		1 (1)		
Floating (#8)				1 (1)
Extra 13th (uni/bilateral)	78 (14)	79 (13)	63 (12)	91[b] (14)
Rudimentary 13th (uni/bil)	26 (11)	29 (12)	22 (9)	17 (10)
STERNEBRAE:				
Reduced Ossification				
Sternebra 2		3 (1)	1 (1)	4 (3)
Sternebra 5	50 (13)	40 (9)	48 (9)	50 (12)
Sternebra 6	29 (14)	14 (6)[a]	19 (8)	19 (7)[a]
Not Ossified				
Sternebra 5	12 (7)	10 (9)	5 (4)	1[a] (1)[a]
Sternebra 6	3 (2)	1 (1)	10[b] (4)	10[b] (4)
Fused (M)		1 (1)		1 (1)
Bilobed (#2)		1 (1)		
Irregular Shape		1 (1)		1 (1)
PUBIC BONE				
Reduced Ossification	1 (1)		1 (1)	
Not Ossified			2 (1)	1 (1)

M = Malformation, all other findings are variations.

[a] The incidence of fetuses and/or litters with the variation is statistically significantly less than the control incidence, Chi Square and Fisher 's Exact Tests ($p \leq 0.05$).

[b] The incidence of fetuses and/or litters with the variation is statistically significantly greater than the control incidence, Chi Square and Fisher 's Exact Tests ($p \leq 0.05$).

TABLE 4 (CON'T)

Summary of Skeletal Malformations/Variations

	Exposure Concentration (ppm)			
	0	125	250	500
No. Fetuses (Litters)	126 (15)	108 (14)	97 (12)	107 (14)
FOREPAWS:				
Reduced Ossification				
Mid-Phalange 5	19 (5)	13 (5)	15 (7)	22 (7)
Metacarpal 1	3 (1)	4 (2)	8[b] (3)	12[b] (4)
Mid-Phalange 2-5	1 (1)			
Proximal Phalange 1, and Mid-Phalange 4,5				2 (2)
HINDPAWS:				
Mid-Phalange 5			5[b] (1)	1 (1)
Proximal Phalange 1, Mid-Phalange 2-5				1 (1)
Calcaneous			4[b] (1)	1 (1)
TOTAL SKELETAL ANOMALIES	119 (15)	105 (14)	91 (12)	104 (14)

M = Malformation, all other findings are variations.

[a] The incidence of fetuses and/or litters with the variation is statistically significantly less than the control incidence, Chi Square and Fisher 's Exact Tests ($p \leq 0.05$).

[b] The incidence of fetuses and/or litters with the variation is statistically significantly greater than the control incidence, Chi Square and Fisher 's Exact Tests ($p \leq 0.05$).

ANALYTICAL QUALITY ASSURANCE INSPECTION STATEMENT

HAEL #: 88-0017 Accession #: 907124 CQS Job #: EE8H014

HAEL Study: *
Study Director: W. Krasavage
Auditee Group & Location: EAS/CQS, B-320
In-Process Inspection Date: ---
Date This Report Sent To Study Director: 09-29-88

Request for Analysis #	Analysis	Sample(s) Received Date	Test Report Date	Test Report Inspection Date
126660	Purity & Struct. Conf.	09-12-88	09-13-88	09-29-88

We have inspected the analytical work described above. Our findings have been sent to the study director and to management. This is done in accordance with Good Laboratory Practice Standards 40 CFR 792.35 and 160.35, and 21 CFR 58.35.

M. J. Boccacino, Quality Assurance Engineer
GLP Compliance, QSO Quality Assurance
09-29-88

ANALYTICAL QUALITY ASSURANCE INSPECTION STATEMENT

H #: 88-0017 Accession #: 907124 CQS Job #: EE8H014

HAEL Study: *
Study Director: E. Renner, W. Krasavage, G. Katz
Auditee Group & Location: EAS/CQS, B-320
In-Process Inspection Date: ---
Date This Report Sent To Study Director: 09-13-88

Request for Analysis #	Analysis	Sample(s) Received Date	Test Report Date	Test Report Inspection Date
131144 & 126659	Purity & Struct. Conf	8/04-8/08/88	08-11-88	09-13-88

We have inspected the analytical work described above. Our findings have been sent to the study director and to management. This is done in accordance with Good Laboratory Practice Standards 40 CFR 792.35 and 160.35, and 21 CFR 58.35.

M. J. Boccacino, Quality Assurance Engineer
Compliance, QSO Quality Assurance
09-13-88

A DEVELOPMENTAL TOXICITY STUDY OF ETHYLENE GLYCOL MONOPROPYL ETHER IN THE RABBIT

Table of Contents for Appendix

	Appendix Page
Acclimation Period Data (88-0017T5)	
Table of Distribution and Fate of Animals	1
Grouped Summary of Clinical Signs	2
Plot of Body Weights	3
Mean Body Weight	4
Individual Body Weights	5
Study Period Data (88-0017T6)	
Table of Distribution and Fate of Animals	7
Grouped Summary of Clinical Signs	8
Plot of Body Weights	12
Mean Body Weight Table	13
Individual Body Weights	14
Mean Body Weight Change	16
Individual Body Weight Changes	17
Plot of Feed Consumption	19
Mean Feed Consumption	20
Individual Feed Consumption	21
Summary Hematology Determination	23
Individual Hematology Determination	24
Summary Cell Morphology	28
Individual Cell Morphology	29
Mean Organ and Terminal Body Weight	30
Individual Organ and Terminal Body Weight	31
Pathologist's Report	33
Summary Gross Pathology Table	34

A DEVELOPMENTAL TOXICITY STUDY OF ETHYLENE GLYCOL MONOPROPYL ETHER IN THE RABBIT

Table of Contents for Appendix (Con't)

	Appendix Page
Individual Gross Pathology Table	35
Gross Pathology Comment	43
Individual Female Data Collected at Cesarian Section	44
Individual Litter Data Collected at Cesarian Section	48
Individual Litter Data - External Fetal Alterations	52
Individual Litter Data - External, Internal Soft Tissue & Skeletal Alterations	66
Test Article Purity Analysis and Structure Confirmation Report	98
Inhalation Exposure Report and Summary of Exposure Data	100

DISTRIBUTION AND FATE OF FEMALES

HAEL NO. 88-0017 ACCESSION NO. 907124 EXPERIMENT NO. 880017T5

START DATE: 13-JULY-88 ROUTE: NONE - ACCLIMATION PERIOD

	DOSE GROUP (PPM) 000.000
Females on Study	65
Total Females Dead/Euthanatized	5
Total Females Transfered to 88-0017T6	60

GROUPED SUMMARY OF CLINICAL SIGNS

EXPERIMENT # 880017T5 EXPERIMENT START DATE: 13-JUL-88 COMPOUND # 88-0017
SOFTWARE VERS # 3.0
ACCESSION NUMBER 907124

SEX - FEMALE OBSERVATION PERIOD - A.M.

CLINICAL SIGN	NO. OF ANIMALS	MEAN ONSET DAY	ONSET S.D. #DAYS	ANIMALS AFFECTED
GROUP 1 - 0.000 PPM				
* NORMAL	1			227
TRANSFERRED FROM STUDY	28	35.	3.	201,203-226,228-230
INDUCED DEATH, CARBON DIOXIDE	2	41.	0.	202,227
CAGE OBS. -FECES				
DECREASED VOLUME	6	3.	2.	202,204,207,214-215,220
GROUP 2 - 0.000 PPM				
SPONTANEOUS DEATH	1	12.	0.	245
TRANSFERRED FROM STUDY	28	38.	3.	231-244,246-254,256-260
INDUCED DEATH, CARBON DIOXIDE	1	41.	0.	255
CAGE OBS. -FECES				
DECREASED VOLUME	9	4.	2.	231,239,241,245-246,248,255,257,260
CAGE OBS. -URINE				
DISCOLORATION,RED	1	12.	0.	239
GROUP 3 - 0.000 PPM				
* NORMAL	1			262
TRANSFERRED FROM STUDY	4	40.	2.	261,263-265
INDUCED DEATH, CARBON DIOXIDE	1	41.	0.	262
CAGE OBS. -FECES				
DECREASED VOLUME	1	2.	0.	265

KEY: *-INDICATES ANIMALS SHOWING ONLY CLINICAL EXAM NORMAL, MORIBUNDITY/MORTALITY CHECK NORMAL OR CAGESIDE OBSERVATION NORMAL

EXPERIMENT # 880017T5 EXPERIMENT START DATE: 13-JUL-88

COMPOUND # 88-0017
VERSION # 3.
ACCESSION # 907124

□ 0.000 PPM F
○ 0.000 PPM F
△ 0.000 PPM F

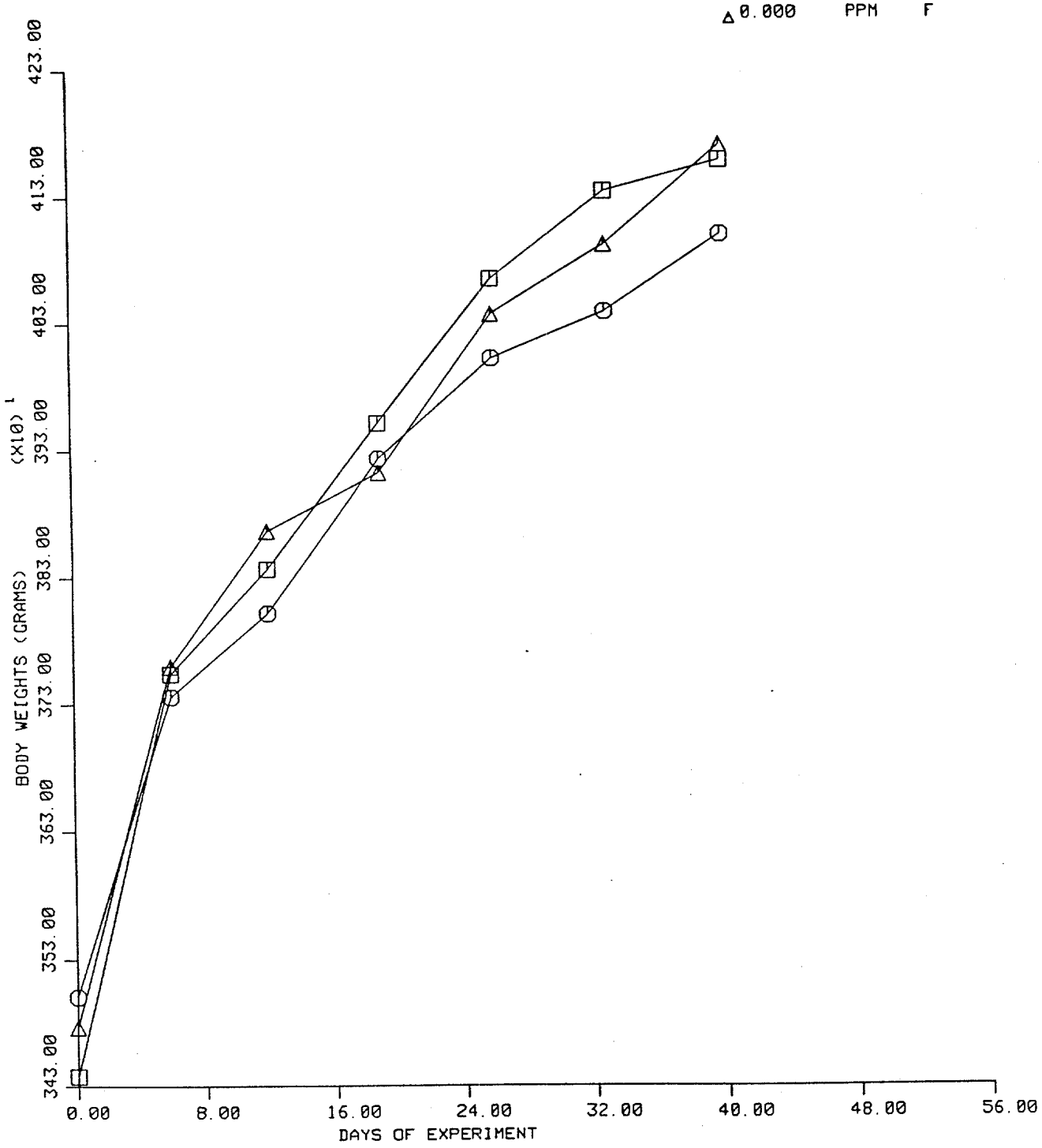

MEAN FOR BODY WEIGHT (GRAMS)

EXPERIMENT # 880017T5 EXPERIMENT START DATE: 13-JUL-88 COMPOUND # 88-0017
SOFTWARE VERS # 3.0
ACCESSION NUMBER 907124

		0.000 PPM GROUP-F		0.000 PPM GROUP-F	0.000 PPM GROUP-F
WEEK #	1				
DAY	0	3437.3	A	3500.9	3476.2
		200.0	B	225.3	213.8
		30	C	30	5
DAY	6	3753.5		3735.7	3759.2
		213.3		222.9	153.1
		30		30	5
WEEK #	2				
DAY	12	3836.8		3801.5	3866.8
		206.0		235.2	159.0
		30		29	5
WEEK #	3				
DAY	19	3951.3		3923.6	3912.8
		228.8		238.7	217.8
		30		29	5
WEEK #	4				
DAY	26	4065.3		4002.4	4038.0
		234.9		234.9	184.9
		30		29	5
WEEK #	5				
DAY	33	4134.6		4039.1	4092.6
		248.1		264.9	221.7
		30		29	5

Key: A = Mean value
B = ± Standard deviation
C = Number of values per group

INDIVIDUAL ANIMAL BODY WEIGHTS (GRAMS)

EXPERIMENT # 880017T5 EXPERIMENT START DATE: 13-JUL-88 COMPOUND # 88-0017
SOFTWARE VERS # 3.0
ACCESSION NUMBER 907124

0.000 PPM GROUP-F

ANIMAL #	201	202	203	204	205	206	207	208	209	210
DAY 0	3367.0	3141.0	3613.0	3438.0	3530.0	3754.0	3230.0	3385.0	3649.0	3871.0
DAY 6	3653.0	3336.0	3908.0	3640.0	3876.0	4159.0	3410.0	3812.0	3837.0	4148.0
DAY 12	3759.0	3551.0	3893.0	3728.0	3954.0	4193.0	3475.0	4018.0	3951.0	4231.0
DAY 19	3894.0	3565.0	3909.0	3827.0	4042.0	4421.0	3637.0	4061.0	4148.0	4246.0
DAY 26	3966.0	3714.0	3987.0	3937.0	4147.0	4511.0	3764.0	4305.0	4341.0	4474.0
DAY 33	4136.0	3649.0	4057.0	3993.0	4202.0	4541.0	3752.0	4324.0	4401.0	4618.0
DAY 40		3840.0								

ANIMAL #	211	212	213	214	215	216	217	218	219	220
DAY 0	3425.0	3325.0	3726.0	3282.0	3543.0	3635.0	3173.0	3361.0	3204.0	3484.0
DAY 6	3595.0	3627.0	4070.0	3424.0	3799.0	3834.0	3509.0	3647.0	3706.0	3748.0
DAY 12	3675.0	3638.0	3977.0	3478.0	3857.0	3958.0	3540.0	3679.0	3987.0	3720.0
DAY 19	3752.0	3767.0	4293.0	3603.0	3953.0	4070.0	3660.0	3830.0	4166.0	3900.0
DAY 26	3926.0	3877.0	4171.0	3800.0	4110.0	4094.0	3691.0	3895.0	4368.0	3887.0
DAY 33	4000.0	3940.0	4493.0	3888.0	4226.0	4147.0	3788.0	3944.0	4408.0	4023.0
DAY 40							3831.0		4507.0	

ANIMAL #	221	222	223	224	225	226	227	228	229	230
DAY 0	3760.0	3253.0	3125.0	3359.0	3430.0	3327.0	3610.0	3224.0	3357.0	3537.0
DAY 6	4046.0	3785.0	3436.0	3720.0	3703.0	3744.0	3939.0	3706.0	3760.0	4027.0
DAY 12	4107.0	3898.0	3589.0	3919.0	3738.0	3853.0	3976.0	3818.0	3791.0	4153.0
DAY 19	4019.0	4098.0	3613.0	4149.0	3807.0	3798.0	3978.0	3972.0	3983.0	4379.0
DAY 26	4149.0	4268.0	3763.0	4321.0	3889.0	3911.0	4083.0	4089.0	4063.0	4459.0
DAY 33	4250.0	4235.0	3793.0	4381.0	3979.0	3968.0	4048.0	4210.0	4194.0	4450.0
DAY 40					4065.0		4332.0			4376.0

0.000 PPM GROUP-F

ANIMAL #	231	232	233	234	235	236	237	238	239	240
DAY 0	3196.0	3296.0	3660.0	3822.0	3415.0	3711.0	3653.0	3577.0	3808.0	3390.0
DAY 6	3400.0	3489.0	3856.0	4242.0	3707.0	4096.0	4046.0	3906.0	4101.0	3547.0
DAY 12	3439.0	3598.0	3853.0	4243.0	3766.0	4161.0	4121.0	4006.0	4136.0	3569.0
DAY 19	3472.0	3717.0	3975.0	4285.0	3879.0	4218.0	4207.0	4152.0	4271.0	3647.0
DAY 26	3494.0	3825.0	3990.0	4292.0	3983.0	4269.0	4256.0	4161.0	4337.0	3648.0
DAY 33	3480.0	3898.0	3989.0	4390.0	3987.0	4337.0	4369.0	4234.0	4281.0	3686.0
DAY 40	3569.0			4457.0			4313.0	4117.0	4293.0	

ANIMAL #	241	242	243	244	245	246	247	248	249	250
DAY 0	3557.0	3368.0	3174.0	3643.0	3979.0	3447.0	3571.0	3388.0	3141.0	3330.0
DAY 6	3866.0	3768.0	3678.0	4022.0	3848.0	3557.0	3730.0	3615.0	3419.0	3522.0
DAY 12	3929.0	4033.0	3815.0	4094.0	K	3649.0	3689.0	3693.0	3567.0	3539.0
DAY 19	4084.0	4206.0	3883.0	4209.0		3750.0	3971.0	3735.0	3650.0	3630.0
DAY 26	4145.0	4263.0	4085.0	4253.0		3801.0	4049.0	3813.0	3770.0	3680.0
DAY 33	4318.0	4323.0	4106.0	4270.0		3740.0	4063.0	3770.0	3708.0	3733.0
DAY 40		4362.0				3860.0		3897.0		3807.0

KEY: K - ANIMAL DIED PRIOR TO STUDY TERMINATION.

INDIVIDUAL ANIMAL BODY WEIGHTS (GRAMS)

EXPERIMENT # 880017T5 EXPERIMENT START DATE: 13-JUL-88 COMPOUND # 88-0017
SOFTWARE VERS # 3.0
ACCESSION NUMBER 907124

0.000 PPM GROUP-F

ANIMAL #	251	252	253	254	255	256	257	258	259	260
DAY 0	3344.0	3255.0	3708.0	3325.0	3588.0	3223.0	3892.0	3358.0	3489.0	3720.0
DAY 6	3524.0	3621.0	3958.0	3550.0	3510.0	3530.0	3860.0	3645.0	3771.0	3686.0
DAY 12	3555.0	3845.0	4033.0	3599.0	3361.0	3611.0	3928.0	3746.0	3801.0	3865.0
DAY 19	3596.0	3981.0	4193.0	3706.0	3737.0	3748.0	4184.0	3811.0	3971.0	3916.0
DAY 26	3686.0	4125.0	4324.0	3787.0	3888.0	3838.0	4242.0	3947.0	4005.0	4115.0
DAY 33	3632.0	4227.0	4403.0	3814.0	4087.0	3925.0	4352.0	3989.0	3981.0	4042.0
DAY 40	3798.0	4327.0	4569.0	3870.0	4175.0					

0.000 PPM GROUP-F

ANIMAL #	261	262	263	264	265
DAY 0	3363.0	3405.0	3220.0	3730.0	3663.0
DAY 6	3711.0	3783.0	3537.0	3957.0	3808.0
DAY 12	3779.0	3913.0	3635.0	4014.0	3993.0
DAY 19	3708.0	4031.0	3646.0	4101.0	4078.0
DAY 26	3969.0	4125.0	3745.0	4157.0	4194.0
DAY 33	4063.0	4198.0	3719.0	4224.0	4259.0
DAY 40		4346.0	3799.0	4290.0	4248.0

DISTRIBUTION AND FATE OF FEMALES

HAEL NO. 88-0017 ACCESSION NO. 907124 EXPERIMENT NO. 880017T6
START DATE: 15-AUG-88 ROUTE: INHALATION

	DOSE GROUP (PPM) 0.000	125.000	250.000	500.000
Females on Study	15	15	15	15
Females Dead/Euthanatized in extremis				
Not Pregnant			3	1
Pregnant	15	15	12	14
Females Aborted/Delivered		1		
Females Examined at C-Section .				
Not Pregnant				
Pregnant	15	14	12	14
Females With Non-Viable Implants Only	0	0	0	0
Females With Viable Fetuses				
Total Females Pregnant	15	15	12	14

GROUPED SUMMARY OF CLINICAL SIGNS

EXPERIMENT # 880017T6 EXPERIMENT START DATE: 15-AUG-88 COMPOUND # 88-0017
SOFTWARE VERS # 3.0
ACCESSION NUMBER 907124

SEX - FEMALE OBSERVATION PERIOD - A.M.

CLINICAL SIGN	NO. OF ANIMALS	MEAN ONSET DAY	ONSET S.D. #DAYS	ANIMALS AFFECTED
GROUP 1 - 0.000 PPM				
* NORMAL	4			401,407,410,412
FEED SPILLAGE	4	12.	8.	404-405,409,411
INDUCED DEATH, CARBON DIOXIDE	15	29.	0.	401-415
LEFT EYE				
CORNEAL OPACITY	1	21.	0.	413
CAGE OBS. -FECES				
DECREASED VOLUME	9	16.	3.	402-403,405-406,408-409,411,414-415
DIARRHEA	2	23.	1.	403,405
CAGE OBS. -URINE				
DECREASED VOLUME	2	18.	4.	402-403
GROUP 2 - 125.000 PPM				
* NORMAL	8			417,419-423,428,430
FEED SPILLAGE	6	15.	10.	416,418,425-427,429
INDUCED DEATH, CARBON DIOXIDE	15	29.	0.	416-430
CAGE OBS. -FECES				
DECREASED VOLUME	2	17.	1.	424,429
GROUP 3 - 250.000 PPM				
* NORMAL	8			434-435,438-440,443-445
FEED SPILLAGE	4	18.	4.	432-433,436,441
INDUCED DEATH, CARBON DIOXIDE	15	29.	0.	431-445
CAGE OBS. -FECES				
DECREASED VOLUME	4	19.	4.	431,437,441-442
CAGE OBS. -URINE				
DECREASED VOLUME	1	19.	0.	431

KEY: *-INDICATES ANIMALS SHOWING CLINICAL EXAM NORMAL, MORIBUNDITY/MORTALITY CHECK NORMAL OR CAGESIDE OBSERVATION NORMAL

GROUPED SUMMARY OF CLINICAL SIGNS

EXPERIMENT # 880017T6 EXPERIMENT START DATE: 15-AUG-88 COMPOUND # 88-0017
SOFTWARE VERS # 3.0
ACCESSION NUMBER 907124

SEX - FEMALE OBSERVATION PERIOD - A.M.

CLINICAL SIGN	NO. OF ANIMALS	MEAN ONSET DAY	ONSET S.D. #DAYS	ANIMALS AFFECTED
GROUP 4 - 500.000 PPM				
* NORMAL	7			446-447,449,451-452,458,460
INDUCED DEATH, CARBON DIOXIDE	15	29.	0.	446-460
CAGE OBS. -URINE				
DISCOLORATION,RED	1	8.	0.	459
CAGE OBS. -FECES				
DECREASED VOLUME	8	17.	5.	448,450,453-457,459

KEY: *-INDICATES ANIMALS SHOWING ONLY CLINICAL EXAM NORMAL, MORIBUNDITY/MORTALITY CHECK NORMAL OR CAGESIDE OBSERVATION NORMAL

GROUPED SUMMARY OF CLINICAL SIGNS

EXPERIMENT # 880017T6 EXPERIMENT START DATE: 15-AUG-88 COMPOUND # 88-0017
SOFTWARE VERS # 3.0
ACCESSION NUMBER 907124

SEX - FEMALE OBSERVATION PERIOD - DURING DOSE

CLINICAL SIGN	NO. OF ANIMALS	MEAN ONSET DAY	ONSET S.D. #DAYS	ANIMALS AFFECTED
GROUP 1 - 0.000 PPM				
CHAMB. OBS.				
CHAMBER OBSERVATION, NORMAL	15	6.	0.	401-415
GROUP 2 - 125.000 PPM				
CHAMB. OBS.				
CHAMBER OBSERVATION, NORMAL	15	6.	0.	416-430
GROUP 3 - 250.000 PPM				
CHAMB. OBS.				
CHAMBER OBSERVATION, NORMAL	15	6.	0.	431-445
GROUP 4 - 500.000 PPM				
CHAMB. OBS.				
CHAMBER OBSERVATION, NORMAL	15	6.	0.	446-460
CAGE OBS. -URINE				
DISCOLORATION,RED	1	7.	0.	459

KEY: *-INDICATES ANIMALS SHOWING ONLY CLINICAL EXAM NORMAL, MORIBUNDITY/MORTALITY CHECK NORMAL OR CAGESIDE OBSERVATION NORMAL

GROUPED SUMMARY OF CLINICAL SIGNS

EXPERIMENT # 880017T6 EXPERIMENT START DATE: 15-AUG-88 COMPOUND # 88-0017
SOFTWARE VERS # 3.0
ACCESSION NUMBER 907124

SEX - FEMALE OBSERVATION PERIOD - P.M.

CLINICAL SIGN	NO. OF ANIMALS	MEAN ONSET DAY	ONSET S.D. #DAYS	ANIMALS AFFECTED
GROUP 1 - 0.000 PPM				
* NORMAL	14			401-410,412-415
FEED SPILLAGE	1	25.	0.	411
GROUP 2 - 125.000 PPM				
* NORMAL	12			416-424,427-428,430
FEED SPILLAGE	3	25.	2.	425-426,429
GROUP 3 - 250.000 PPM				
* NORMAL	13			431-435,437-440,442-445
FEED SPILLAGE	2	26.	4.	436,441
GROUP 4 - 500.000 PPM				
* NORMAL	14			446-458,460
CAGE OBS. -URINE				
DISCOLORATION,RED	1	7.	0.	459

KEY: *-INDICATES ANIMALS SHOWING ONLY CLINICAL EXAM NORMAL, MORIBUNDITY/MORTALITY CHECK NORMAL OR CAGESIDE OBSERVATION NORMAL

EXPERIMENT # 880017T6 EXPERIMENT START DATE: 15-AUG-88

COMPOUND # 88-0017
VERSION # 3.
ACCESSION # 907124
□ 0.000 PPM F
○ 125.000 PPM F
△ 250.000 PPM F
+ 500.000 PPM F

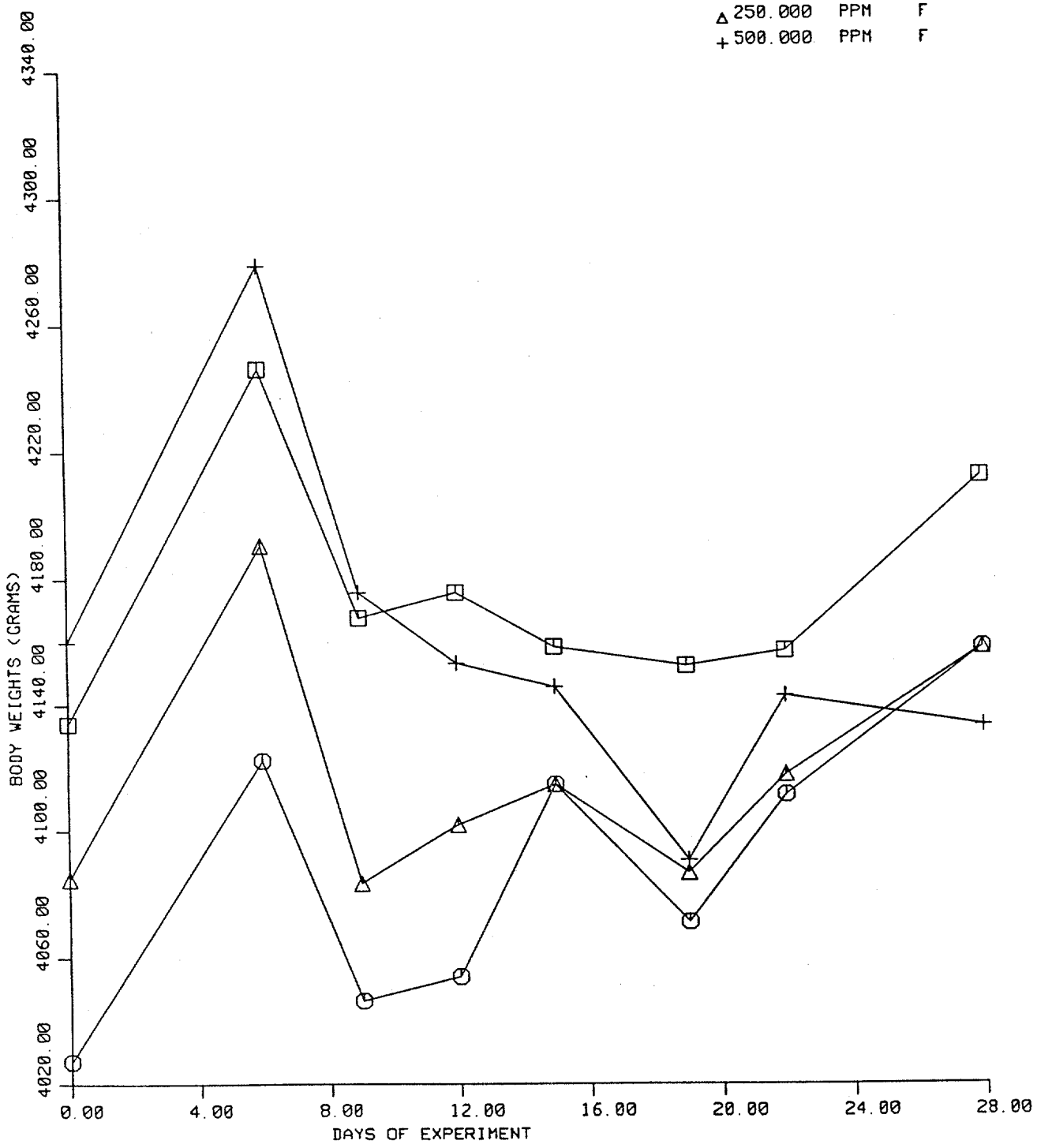

MEAN FOR BODY WEIGHT (GRAMS)

EXPERIMENT # 880017T6 EXPERIMENT START DATE: 15-AUG-88

COMPOUND # 88-0017
SOFTWARE VERS # 3.0
ACCESSION NUMBER 907124

		0.000 PPM GROUP-F	125.000 PPM GROUP-F	250.000 PPM GROUP-F	500.000 PPM GROUP-F
WEEK #	1				
DAY	0	4133.6 A	4026.9	4084.5	4159.9
		257.8 B	239.0	267.9	264.0
		15 C	15	12	14
DAY	6	4246.1	4122.2	4190.6	4278.7
		249.1	252.8	284.0	267.9
		15	15	12	14
WEEK #	2				
DAY	9	4167.9	4046.3	4083.5	4175.8
		265.7	271.3	321.3	252.8
		15	15	12	14
DAY	12	4176.0	4053.7	4101.8	4153.4
		277.9	252.7	316.9	276.7
		15	15	12	14
WEEK #	3				
DAY	15	4158.8	4114.5	4114.5	4145.9
		274.8	235.7	306.3	266.9
		15	15	12	14
DAY	19	4152.6	4071.1	4086.7	4090.6
		298.9	239.0	355.5	325.3
		15	15	12	14
WEEK #	4				
DAY	22	4157.4	4111.3	4118.0	4142.9
		308.0	293.7	384.6	335.2
		15	15	12	14
DAY	28	4212.7	4158.7	4158.5	4133.6
		332.2	283.2	376.3	369.9
		15	15	12	14

KEY: A = MEAN VALUE
B = ± STANDARD DEVIATION
C = NUMBER OF VALUES PER GROUP

INDIVIDUAL ANIMAL BODY WEIGHTS (GRAMS)

EXPERIMENT # 880017T6 EXPERIMENT START DATE: 15-AUG-88 COMPOUND # 88-0017
SOFTWARE VERS # 3.0
ACCESSION NUMBER 907124

0.000 PPM GROUP-F

ANIMAL #	401	402	403	404	405	406	407	408	409	410
DAY 0	4057.0	3993.0	4618.0	4097.0	3954.0	3942.0	4020.0	4523.0	4160.0	4097.0
DAY 6	4062.0	4062.0	4599.0	4267.0	4138.0	4034.0	4153.0	4630.0	4390.0	4166.0
DAY 9	4054.0	3902.0	4546.0	4386.0	4001.0	3990.0	4077.0	4483.0	4121.0	4202.0
DAY 12	4118.0	3790.0	4612.0	4424.0	4087.0	3954.0	4130.0	4534.0	4125.0	4283.0
DAY 15	4217.0	3788.0	4642.0	4340.0	4072.0	3869.0	4200.0	4412.0	4152.0	4253.0
DAY 19	4148.0	3690.0	4450.0	4388.0	3922.0	3778.0	4112.0	4615.0	4090.0	4299.0
DAY 22	4176.0	3608.0	4288.0	4375.0	3830.0	3849.0	4164.0	4566.0	4187.0	4351.0
DAY 28	4219.0	3669.0	4221.0	4416.0	3862.0	3992.0	4362.0	4742.0	4216.0	4341.0

ANIMAL #	411	412	413	414	415
DAY 0	4260.0	3747.0	4530.0	4199.0	3807.0
DAY 6	4366.0	3820.0	4638.0	4381.0	3985.0
DAY 9	4253.0	3733.0	4665.0	4244.0	3861.0
DAY 12	4171.0	3738.0	4621.0	4170.0	3883.0
DAY 15	4008.0	3819.0	4671.0	4045.0	3894.0
DAY 19	4136.0	3831.0	4704.0	4195.0	3931.0
DAY 22	4030.0	3883.0	4759.0	4371.0	3924.0
DAY 28	4051.0	3836.0	4894.0	4389.0	3981.0

125.000 PPM GROUP-F

ANIMAL #	416	417	418	419	420	421	422	423	424 PD	425
DAY 0	3888.0	4202.0	3752.0	4242.0	3974.0	4151.0	3936.0	3795.0	4213.0	3977.0
DAY 6	4066.0	4232.0	3831.0	4338.0	4099.0	4175.0	4004.0	3890.0	4423.0	4040.0
DAY 9	3972.0	4119.0	3845.0	4291.0	4116.0	4003.0	3889.0	3813.0	4355.0	3956.0
DAY 12	3951.0	4124.0	3900.0	4337.0	4088.0	4030.0	3889.0	3841.0	4268.0	3933.0
DAY 15	3960.0	4087.0	3955.0	4440.0	4168.0	4163.0	4064.0	3930.0	4188.0	4174.0
DAY 19	3916.0	4038.0	3777.0	4371.0	4071.0	4107.0	4074.0	3930.0	4029.0	4151.0
DAY 22	3948.0	4115.0	3811.0	4407.0	4077.0	4138.0	4073.0	3971.0	3829.0	4169.0
DAY 28	4173.0	4067.0	3807.0	4392.0	4126.0	4225.0	4324.0	4081.0	3653.0	4224.0

ANIMAL #	426	427	428	429	430
DAY 0	3825.0	4355.0	3568.0	4405.0	4120.0
DAY 6	3977.0	4367.0	3567.0	4518.0	4306.0
DAY 9	3815.0	4360.0	3459.0	4505.0	4196.0
DAY 12	3814.0	4390.0	3533.0	4449.0	4259.0
DAY 15	3818.0	4513.0	3629.0	4381.0	4247.0
DAY 19	3807.0	4423.0	3631.0	4404.0	4337.0
DAY 22	3772.0	4567.0	3693.0	4638.0	4461.0
DAY 28	3797.0	4605.0	3914.0	4595.0	4397.0

KEY: NN - NOT PREGNANT : NEGATIVE STAIN, PD - PREGNANT : DELIVERED

INDIVIDUAL ANIMAL BODY WEIGHTS (GRAMS)

EXPERIMENT # 880017T6 EXPERIMENT START DATE: 15-AUG-88 COMPOUND # 88-0017
SOFTWARE VERS # 3.0
ACCESSION NUMBER 907124

250.000 PPM GROUP-F

ANIMAL #	431	432	433	434	435	436	437	438	439	440
DAY 0	4401.0	4493.0	4236.0	4024.0	3868.0	4181.0	3874.0	4044.0	4046.0	3667.0
DAY 6	4416.0	4584.0	4491.0	4152.0	4014.0	4195.0	3970.0	4150.0	4165.0	3655.0
DAY 9	4326.0	4635.0	4304.0	3948.0	3942.0	4118.0	3832.0	3987.0	3963.0	3516.0
DAY 12	4313.0	4695.0	4323.0	3979.0	3937.0	4112.0	3908.0	4001.0	3993.0	3557.0
DAY 15	4111.0	4709.0	4332.0	3940.0	4000.0	4087.0	3896.0	3984.0	4222.0	3603.0
DAY 19	3894.0	4823.0	4389.0	3833.0	3987.0	4040.0	3795.0	3966.0	4225.0	3591.0
DAY 22	3788.0	4978.0	4499.0	3891.0	4053.0	4003.0	3864.0	4064.0	4266.0	3552.0
DAY 28	3547.0	4933.0	4529.0	4101.0	4164.0	4151.0	4054.0	4006.0	4334.0	3597.0

ANIMAL #	441	442	443 NN	444 NN	445 NN
DAY 0	4420.0	3760.0	4096.0	4271.0	3797.0
DAY 6	4575.0	3920.0	4162.0	4293.0	3870.0
DAY 9	4562.0	3869.0	4103.0	4268.0	3778.0
DAY 12	4549.0	3855.0	4082.0	4195.0	3743.0
DAY 15	4573.0	3917.0	4068.0	4177.0	3725.0
DAY 19	4585.0	3912.0	3925.0	4160.0	3832.0
DAY 22	4484.0	3974.0	4196.0	4309.0	3978.0
DAY 28	4399.0	4087.0	4196.0	4252.0	3957.0

500.000 PPM GROUP-F

ANIMAL #	446	447 NN	448	449	450	451	452	453	454	455
DAY 0	4324.0	4136.0	4142.0	3971.0	4345.0	4343.0	4303.0	4348.0	4130.0	3647.0
DAY 6	4406.0	4068.0	4259.0	4192.0	4550.0	4516.0	4403.0	4452.0	4140.0	3771.0
DAY 9	4240.0	4090.0	4117.0	4069.0	4510.0	4324.0	4282.0	4345.0	4211.0	3731.0
DAY 12	4266.0	3969.0	4012.0	4064.0	4531.0	4347.0	4240.0	4322.0	4144.0	3666.0
DAY 15	4316.0	3797.0	3952.0	4146.0	4591.0	4364.0	4251.0	4250.0	4250.0	3600.0
DAY 19	4303.0	4025.0	3830.0	4089.0	4655.0	4376.0	4314.0	4087.0	4255.0	3347.0
DAY 22	4341.0	4017.0	3895.0	4146.0	4716.0	4403.0	4338.0	4091.0	4262.0	3292.0
DAY 28	4311.0	4072.0	4082.0	4226.0	4636.0	4512.0	4298.0	4052.0	3940.0	3061.0

ANIMAL #	456	457	458	459	460
DAY 0	4507.0	3821.0	4347.0	4268.0	3743.0
DAY 6	4626.0	3907.0	4449.0	4356.0	3875.0
DAY 9	4564.0	3860.0	4339.0	4086.0	3783.0
DAY 12	4566.0	3812.0	4345.0	4096.0	3736.0
DAY 15	4331.0	3894.0	4322.0	3992.0	3784.0
DAY 19	4074.0	3817.0	4340.0	3977.0	3804.0
DAY 22	4234.0	3901.0	4369.0	4128.0	3885.0
DAY 28	4256.0	3988.0	4372.0	4162.0	3974.0

KEY: NN - NOT PREGNANT : NEGATIVE STAIN, PD - PREGNANT : DELIVERED

Ethylene Glycol Monopropyl Ether - Developmental Toxicity Study in The Rabbit

Mean Body Weight Change

Gestation Days -		0-6	6-9	9-12	12-15	15-19	19-22	22-28	6-19	0-28
Dose										
0 PPM	Mean	112	-78	8	-17	-6	5	55	-93	79
	SD	69	96	64	82	113	90	77	162	237
	n	15	15	15	15	15	15	15	15	15
125 PPM	Mean	95	-76	7	61	-43	40	47	-51	132
	SD	66	59	45	91	70	94	118	135	238
	n	15	15	15	15	15	15	15	15	15
250 PPM	Mean	106	-107	18	13	-28	31	41	-104	74
	SD	74	79	30	98	85	83	130	193	339
	n	12	12	12	12	12	12	12	12	12
500 PPM	Mean	119	-103	-22	-7	-55	52	-9	-188	-26
	SD	53	81	40	93	106	57	135	205	247
	n	14	14	14	14	14	14	14	14	14

Ethylene Glycol Monopropyl Ether - Developmental Toxicity Study in The Rabbit

Individual Body Weight Change

Gestation Days -			0-6	6- 9	9-12	12-15	15-19	19-22	22-28	6-19	0-28
Dose	Animal No.										
0 PPM	401		5	-8	64	99	-69	28	43	86	162
	402		69	-160	-112	-2	-98	-82	61	-372	-324
	403		-19	-53	66	30	-192	-162	-67	-149	-397
	404		170	119	38	-84	48	-13	41	121	319
	405		184	-137	86	-15	-150	-92	32	-216	-92
	406		92	-44	-36	-85	-91	71	143	-256	50
	407		133	-76	53	70	-88	52	198	-41	342
	408		107	-147	51	-122	203	-49	176	-15	219
	409		230	-269	4	27	-62	97	29	-300	56
	410		69	36	81	-30	46	52	-10	133	244
	411		106	-113	-82	-163	128	-106	21	-230	-209
	412		73	-87	5	81	12	52	-47	11	89
	413		108	27	-44	50	33	55	135	66	364
	414		182	-137	-74	-125	150	176	18	-186	190
	415		178	-124	22	11	37	-7	57	-54	174
125 PPM	416		178	-94	-21	9	-44	32	225	-150	285
	417		30	-113	5	-37	-49	77	-48	-194	-135
	418		79	14	55	55	-178	34	-4	-54	55
	419		96	-47	46	103	-69	36	-15	33	150
	420		125	17	-28	80	-97	6	49	-28	152
	421		24	-172	27	133	-56	31	87	-68	74
	422		68	-115	0	175	10	-1	251	70	388
	423		95	-77	28	89	0	41	110	40	286
	424	PD	210	-68	-87	-80	-159	-200	-176	-394	-560
	425		63	-84	-23	241	-23	18	55	111	247
	426		152	-162	-1	4	-11	-35	25	-170	-28
	427		12	-7	30	123	-90	144	38	56	250
	428		-1	-108	74	96	2	62	221	64	346
	429		113	-13	-56	-68	23	234	-43	-114	190
	430		186	-110	63	-12	90	124	-64	31	277

Ethylene Glycol Monopropyl Ether - Developmental Toxicity Study in The Rabbit

Individual Body Weight Change

Gestation Days -			0-6	6-9	9-12	12-15	15-19	19-22	22-28	6-19	0-28
Dose	Animal No.										
250 PPM	431		15	-90	-13	-202	-217	-106	-241	-522	-854
	432		91	51	60	14	114	155	-45	239	440
	433		255	-187	19	9	57	110	30	-102	293
	434		128	-204	31	-39	-107	58	210	-319	77
	435		146	-72	-5	63	-13	66	111	-27	296
	436		14	-77	-6	-25	-47	-37	148	-155	-30
	437		96	-138	76	-12	-101	69	190	-175	180
	438		106	-163	14	-17	-18	98	-58	-184	-38
	439		119	-202	30	229	3	41	68	60	288
	440		-12	-139	41	46	-12	-39	45	-64	-70
	441		155	-13	-13	24	12	-101	-85	10	-21
	442		160	-51	-14	62	-5	62	113	-8	327
	443	NN	66	-59	-21	-14	-143	271	0	-237	100
	444	NN	22	-25	-73	-18	-17	149	-57	-133	-19
	445	NN	73	-92	-35	-18	107	146	-21	-38	160
500 PPM	446		82	-166	26	50	-13	38	-30	-103	-13
	447	NN	-68	22	-121	-172	228	-8	55	-43	-64
	448		117	-142	-105	-60	-122	65	187	-429	-60
	449		221	-123	-5	82	-57	57	80	-103	255
	450		205	-40	21	60	64	61	-80	105	291
	451		173	-192	23	17	12	27	109	-140	169
	452		100	-121	-42	11	63	24	-40	-89	-5
	453		104	-107	-23	-72	-163	4	-39	-365	-296
	454		10	71	-67	106	5	7	-322	115	-190
	455		124	-40	-65	-66	-253	-55	-231	-424	-586
	456		119	-62	2	-235	-257	160	22	-552	-251
	457		86	-47	-48	82	-77	84	87	-90	167
	458		102	-110	6	-23	18	29	3	-109	25
	459		88	-270	10	-104	-15	151	34	-379	-106
	460		132	-92	-47	48	20	81	89	-71	231

EXPERIMENT # 880017T6 EXPERIMENT START DATE: 15-AUG-88

COMPOUND # 88-0017
VERSION # 3.
ACCESSION # 907124

□ 0.000	PPM	F
○ 125.000	PPM	F
△ 250.000	PPM	F
+ 500.000	PPM	F

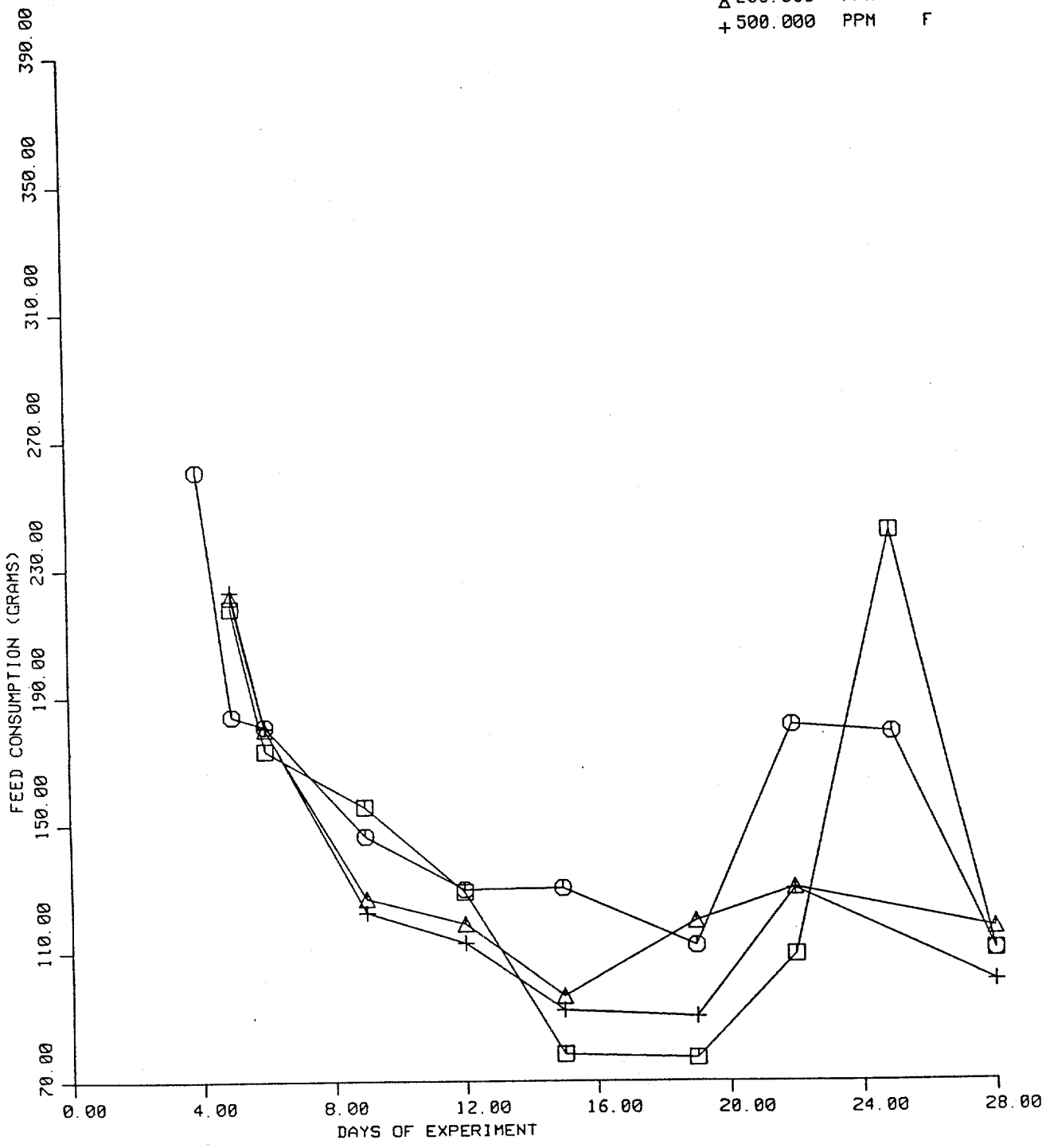

MEAN FOR FEED CONSUMPTION (GRAMS) λ

EXPERIMENT # 880017T6 EXPERIMENT START DATE: 15-AUG-88 COMPOUND # 88-0017
SOFTWARE VERS # 3.0
ACCESSION NUMBER 907124

		0.000 PPM GROUP-F	125.000 PPM GROUP-F	250.000 PPM GROUP-F	500.000 PPM GROUP-F
WEEK #	1				
DAY	4		260.6 16.4 2		
DAY	5	217.6 A 29.4 B 3 C	183.8 0.0 1	221.6 0.0 1	222.9 28.7 2
DAY	6	172.8 34.0 14	180.6 42.9 15	179.9 61.6 12	180.2 31.0 14
WEEK #	2				
DAY	9	155.5 41.5 14	146.1 39.0 14	126.5 66.1 12	122.1 48.6 14
DAY	12	128.6 53.5 12	129.5 28.6 15	118.4 40.3 11	112.5 51.5 14
WEEK #	3				
DAY	15	78.1 51.7 12	129.8 51.6 14	96.0 53.3 10	91.6 53.2 14
DAY	19	76.8 59.7 13	111.8 55.2 12	119.4 69.2 11	89.7 66.4 14
WEEK #	4				
DAY	22	109.0 86.2 13	181.0 115.5 13	129.9 77.4 8	129.4 60.5 14
DAY	25	241.8 28.8 2	178.7 0.0 1		
DAY	28	110.2 50.8 14	110.3 48.4 14	116.9 53.6 10	100.4 57.3 14

KEY: A = MEAN VALUE
B = ± STANDARD DEVIATION
C = NUMBER OF VALUES PER GROUP
λ = FEED CONSUMPTION REFERS TO GRAMS/ANIMAL/DAY.

INDIVIDUAL ANIMAL FEED CONSUMPTION (GRAMS)

EXPERIMENT # 880017T6 EXPERIMENT START DATE: 15-AUG-88 COMPOUND # 88-0017
SOFTWARE VERS # 3.0
ACCESSION NUMBER 907124

0.000 PPM GROUP-F

ANIMAL #	401	402	403	404	405	406	407	408	409	410
DAY 5				237.0				183.8		
DAY 6	132.8	150.0	143.2		165.8	195.5	179.2	179.8	199.2	198.5
DAY 9	140.8	102.0	176.0	140.0	232.3	177.6	171.0	118.9		171.7
DAY 12	136.2	7.3	171.3			132.7	167.7	138.3		198.0
DAY 15	117.7		101.3			43.4	110.7	51.7		125.7
DAY 19	103.5	0.2	26.8		12.8	27.2	111.5	124.5		143.8
DAY 22	110.7		4.3		21.0	62.0	170.0	202.0		175.6
DAY 28	122.8	58.5	28.7	203.7	96.0	70.5	180.7	164.2	137.6	95.3

ANIMAL #	411	412	413	414	415
DAY 5			232.0		
DAY 6	170.0	152.0	262.9	144.5	146.3
DAY 9	132.9	127.0	239.7	121.3	126.0
DAY 12	129.7	130.1	181.0	69.3	82.0
DAY 15	32.5	170.0	112.0	16.5	56.0
DAY 19	0.2	155.0	159.5	75.9	57.8
DAY 22		183.0	253.3	142.8	91.7
DAY 25		221.4	262.1		
DAY 28		53.1	125.9	126.7	79.0

125.000 PPM GROUP-F

ANIMAL #	416	417	418	419	420	421	422	423	424 PD	425
DAY 4									249.0	272.3
DAY 5								183.8		
DAY 6	197.7	155.8	195.8	163.5	183.8	157.3	151.5	187.0	251.0	287.0
DAY 9	181.3	141.5	211.0	151.7	148.7	90.7	124.0	131.3	200.0	151.0
DAY 12	142.0	93.7	128.0	144.8	151.7	91.3	115.3	127.0	175.7	124.0
DAY 15	128.7	84.7	265.0	129.0	126.3	114.0	98.7	121.7	68.3	204.0
DAY 19	89.5	52.6		142.3	105.5	101.8	119.0	145.8	0.5	201.8
DAY 22	135.0	117.1		156.0	153.0	110.7	180.0	150.7	0.3	288.3
DAY 28		69.5	78.0	124.2	130.2	73.0	181.3	121.3	0.2	166.7

ANIMAL #	426	427	428	429	430
DAY 6	160.3	128.2	143.7	204.5	141.3
DAY 9	124.7		160.0	164.1	65.0
DAY 12	96.7	188.5	141.7	117.0	104.7
DAY 15	142.0		152.0	98.7	83.7
DAY 19	88.5		190.5		103.5
DAY 22		270.0	164.7	485.5	142.3
DAY 25			178.7		
DAY 28	109.8	127.8	176.1	100.0	86.0

NOTE: NO ENTRY IS THE RESULT OF FEEDERS NOT BEING WEIGHED DUE TO FEED SPILLAGE OR SOME WEIGHTS TAKEN ON NON-SCHEDULED DAYS.

KEY: NN - NOT PREGNANT : NEGATIVE STAIN, PD - PREGNANT : DELIVERED

INDIVIDUAL ANIMAL FEED CONSUMPTION (GRAMS)

EXPERIMENT # 880017T6 EXPERIMENT START DATE: 15-AUG-88 COMPOUND # 88-0017
SOFTWARE VERS # 3.0
ACCESSION NUMBER 907124

250.000 PPM GROUP-F

ANIMAL #	431	432	433	434	435	436	437	438	439	440
DAY 5			221.6							
DAY 6	192.7	210.0	357.0	163.0	168.3	159.7	117.0	176.5	146.5	136.7
DAY 9	137.3	213.3	210.7	102.3	136.0	116.3	51.7	56.0	64.7	49.7
DAY 12	129.0	193.7	188.7	84.7	103.8	118.7	68.0	125.0	90.7	92.0
DAY 15	17.7	179.3	168.3	60.7	99.8		56.7	75.0	151.3	69.0
DAY 19	1.2	195.0	247.3	45.5	102.5		67.3	109.8	174.0	122.0
DAY 22	2.3			58.3	121.3		152.3	267.3	156.3	131.7
DAY 28		174.3	90.0	128.0	103.3		178.2	147.5	158.0	78.3

ANIMAL #	441	442	443 NN	444 NN	445 NN
DAY 6	190.0	141.6	179.0	156.8	85.3
DAY 9	235.7	144.7	117.0	118.0	138.7
DAY 12		108.7	128.3	112.3	95.0
DAY 15		82.7	149.3	173.0	113.5
DAY 19	135.0	114.0	97.5	131.0	151.0
DAY 22		149.3	176.0	162.3	190.3
DAY 28		111.2	152.5	114.7	149.8

500.000 PPM GROUP-F

ANIMAL #	446	447 NN	448	449	450	451	452	453	454	455
DAY 5					243.2	202.6				
DAY 6	185.1	199.2	159.4	150.7	261.0	192.0	175.5	208.5	172.5	151.0
DAY 9	98.6	168.0	118.6	125.0	202.0	152.0	118.7	130.3	196.7	86.3
DAY 12	109.0	112.3	52.3	93.6	210.0	157.0	75.3	130.7	161.7	84.7
DAY 15	111.0	116.0	55.3	81.0	181.7	143.0	103.0	47.3	165.7	16.7
DAY 19	118.6	102.0	29.8	99.5	181.0	145.0	149.5	20.3	197.3	1.2
DAY 22	155.1	171.3	103.0	143.3	238.3	132.3	152.1	100.7	169.0	4.7
DAY 28	88.0	164.8	186.3	118.3	137.3	161.2	74.3	39.0	12.3	0.3

ANIMAL #	456	457	458	459	460
DAY 6	204.7	150.2	190.7	174.7	146.5
DAY 9	167.0	119.7	88.7	13.0	93.0
DAY 12	140.3	116.0	141.3	1.0	102.7
DAY 15	55.0	85.1	117.7	1.0	119.3
DAY 19	0.5	39.8	104.8	46.0	122.8
DAY 22	17.7	128.7	130.0	159.5	177.3
DAY 28	80.2	145.7	71.7	152.5	139.2

NOTE: NO ENTRY IS THE RESULT OF FEEDERS NOT BEING WEIGHED DUE TO FEED SPILLAGE OR SOME WEIGHTS TAKEN ON NON-SCHEDULED DAYS.

KEY: NN - NOT PREGNANT : NEGATIVE STAIN, PD - PREGNANT : DELIVERED

SUMMARY HEMATOLOGY DETERMINATION

EXPERIMENT # 880017T6 EXPERIMENT START DATE: 15-AUG-88 COMPOUND # 88-0017
SOFTWARE VERS # 3.0
ACCESSION NUMBER 907124

ANALYTICAL MATERIAL: BLOOD SAMPLE DAY # 29

	0.000 PPM GROUP-F	125.000 PPM GROUP-F	250.000 PPM GROUP-F	500.000 PPM GROUP-F
WBC/MM3 X3	4.4 A	4.7	4.9	5.0
	0.8 B	1.4	1.7	1.2
	15 C	14	12	14
RBC/MM3 X6	5.7	5.4	5.7	5.4
	0.6	0.4	0.6	0.5
	15	14	12	14
HB CONC , G/DL	12.8	12.3	12.6	12.4
	1.3	0.6	1.1	0.6
	15	14	12	14
HCT , %	40.4	38.8	39.3	38.9
	4.1	2.2	3.4	2.0
	15	14	12	14
MCV , U3	70.3	71.8	69.3	72.6
	3.5	3.2	3.2	4.0
	15	14	12	14
MCH , UUG	22.2	22.8	22.3	22.9
	0.9	0.9	1.0	1.4
	15	14	12	14
MCHC , %	31.6	31.7	32.1	31.8
	0.8	1.0	1.0	0.8
	15	14	12	14
PLATELETS/MM3 X3	352.4	382.4	376.8	406.6
	64.8	65.7	71.9	132.0
	15	14	12	14
POLYS , %	38.9	35.8	40.6	37.3
	14.5	12.4	16.7	11.5
	15	14	12	14
BANDS , %	0.0	0.0	0.0	0.0
	0.0	0.0	0.0	0.0
	15	14	12	14
LYMPHOCYTES,%	57.9	61.7	57.1	59.3
	13.9	13.1	16.3	11.6
	15	14	12	14
MONOCYTES,%	1.9	1.2	0.9	1.3
	1.9	1.1	1.2	1.4
	15	14	12	14
EOSINOPHIL,%	0.4	0.6	0.3	0.2
	0.7	0.5	0.5	0.4
	15	14	12	14
BASOPHIL,%	0.8	0.6	0.5	1.6
	0.9	0.9	0.8	2.1
	15	14	12	14
LYMPHOCYTES ATYPICAL, %	0.1	0.1	0.5	0.3
	0.4	0.3	0.7	0.6
	15	14	12	14
NUCLEATED RBC/100WBC	0.0	0.0	0.0	0.0
	0.0	0.0	0.0	0.0
	15	14	12	14

KEY: A = MEAN VALUE
B = ± STANDARD DEVIATION
C = NUMBER OF VALUES PER GROUP

INDIVIDUAL ANIMAL HEMATOLOGY DETERMINATION

EXPERIMENT # 880017T6 EXPERIMENT START DATE: 15-AUG-88 COMPOUND # 88-0017
SOFTWARE VERS # 3.0
ACCESSION NUMBER 907124

ANALYTICAL MATERIAL: BLOOD SAMPLE DAY # 29

0.000 PPM GROUP-F

ANIMAL #	401	402	403	404	405	406	407	408	409	410
WBC/MM3 X3	3.9	5.6	4.2	2.9	4.4	5.5	4.5	4.3	5.6	3.8
RBC/MM3 X6	6.1	6.5	5.4	5.3	5.1	5.7	4.6	5.5	5.8	6.6
HB CONC , G/DL	12.9	13.9	12.2	12.5	11.5	13.1	10.0	12.0	12.8	14.1
HCT , %	42.0	44.0	39.0	39.0	38.0	41.0	31.0	37.0	41.0	44.0
MCV , U3	69.0	67.0	73.0	73.0	74.0	72.0	67.0	67.0	71.0	67.0
MCH , UUG	21.3	21.3	22.8	23.5	22.4	23.0	21.6	21.7	22.3	21.3
MCHC , %	30.7	31.6	31.3	32.1	30.3	32.0	32.3	32.4	31.2	32.0
PLATELETS/MM3 X3	237.0	368.0	286.0	326.0	331.0	292.0	442.0	358.0	468.0	351.0
POLYS , %	34.0	27.0	34.0	44.0	40.0	66.0	43.0	69.0	51.0	25.0
BANDS , %	0.0	0.0	0.0	0.0	0.0	0.0	0.0	0.0	0.0	0.0
LYMPHOCYTES,%	63.0	70.0	65.0	56.0	56.0	32.0	54.0	29.0	47.0	74.0
MONOCYTES,%	1.0	1.0	1.0	0.0	2.0	1.0	0.0	2.0	2.0	0.0
EOSINOPHIL,%	0.0	1.0	0.0	0.0	0.0	0.0	1.0	0.0	0.0	0.0
BASOPHIL,%	2.0	1.0	0.0	0.0	1.0	1.0	1.0	0.0	0.0	1.0
LYMPHOCYTES ATYPICAL, %	0.0	0.0	0.0	0.0	1.0	0.0	1.0	0.0	0.0	0.0
NUCLEATED RBC/100WBC	0.0	0.0	0.0	0.0	0.0	0.0	0.0	0.0	0.0	0.0

ANIMAL #	411	412	413	414	415
WBC/MM3 X3	4.5	5.2	3.1	3.9	4.3
RBC/MM3 X6	5.7	6.7	5.4	5.9	5.9
HB CONC , G/DL	13.6	14.8	11.0	13.2	13.7
HCT , %	42.0	46.0	35.0	41.0	46.0
MCV , U3	73.0	69.0	65.0	70.0	78.0
MCH , UUG	23.7	22.0	20.5	22.4	23.2
MCHC , %	32.4	32.2	31.4	32.2	29.8
PLATELETS/MM3 X3	331.0	445.0	373.0	388.0	290.0
POLYS , %	24.0	23.0	43.0	24.0	36.0
BANDS , %	0.0	0.0	0.0	0.0	0.0
LYMPHOCYTES,%	72.0	68.0	49.0	71.0	62.0
MONOCYTES,%	4.0	4.0	7.0	2.0	1.0
EOSINOPHIL,%	0.0	2.0	0.0	2.0	0.0
BASOPHIL,%	0.0	3.0	1.0	0.0	1.0
LYMPHOCYTES ATYPICAL, %	0.0	0.0	0.0	0.0	0.0
NUCLEATED RBC/100WBC	0.0	0.0	0.0	0.0	0.0

KEY: NN - NOT PREGNANT : NEGATIVE STAIN, PD - PREGNANT : DELIVERED

INDIVIDUAL ANIMAL HEMATOLOGY DETERMINATION

EXPERIMENT # 880017T6 EXPERIMENT START DATE: 15-AUG-88 COMPOUND # 88-0017
SOFTWARE VERS # 3.0
ACCESSION NUMBER 907124

ANALYTICAL MATERIAL: BLOOD SAMPLE DAY # 29

125.000 PPM GROUP-F

ANIMAL #	416	417	418	419	420	421	422	423	424 PD	425
WBC/MM3 X3	3.7	6.0	4.0	4.6	3.3	4.2	2.8	5.8	*	3.8
RBC/MM3 X6	5.5	5.6	5.9	5.2	5.0	5.1	6.0	4.9		5.6
HB CONC , G/DL	12.8	12.8	12.6	12.2	12.2	11.5	13.0	11.6		13.0
HCT , %	40.0	41.0	40.0	38.0	38.0	36.0	43.0	37.0		42.0
MCV , U3	72.0	73.0	68.0	73.0	76.0	71.0	71.0	75.0		75.0
MCH , UUG	23.1	22.8	21.3	23.6	24.3	22.6	21.6	23.6		23.2
MCHC , %	32.0	31.2	31.5	32.1	32.1	31.9	30.2	31.3		30.9
PLATELETS/MM3 X3	482.0	350.0	311.0	448.0	318.0	307.0	402.0	481.0		458.0
POLYS , %	33.0	52.0	20.0	37.0	49.0	24.0	36.0	31.0		26.0
BANDS , %	0.0	0.0	0.0	0.0	0.0	0.0	0.0	0.0		0.0
LYMPHOCYTES,%	61.0	45.0	79.0	63.0	49.0	73.0	64.0	64.0		74.0
MONOCYTES,%	1.0	1.0	1.0	0.0	1.0	1.0	0.0	2.0		0.0
EOSINOPHIL,%	1.0	1.0	0.0	0.0	0.0	1.0	0.0	1.0		0.0
BASOPHIL,%	3.0	1.0	0.0	0.0	1.0	1.0	0.0	2.0		0.0
LYMPHOCYTES ATYPICAL, %	1.0	0.0	0.0	0.0	0.0	0.0	0.0	0.0		0.0
NUCLEATED RBC/100WBC	0.0	0.0	0.0	0.0	0.0	0.0	0.0	0.0		0.0

ANIMAL #	426	427	428	429	430
WBC/MM3 X3	7.4	5.9	6.3	4.3	3.4
RBC/MM3 X6	5.9	5.5	5.4	4.9	5.2
HB CONC , G/DL	13.1	12.2	11.9	11.4	11.9
HCT , %	38.0	38.0	39.0	35.0	38.0
MCV , U3	64.0	69.0	72.0	72.0	74.0
MCH , UUG	22.1	22.2	21.9	23.5	23.1
MCHC , %	34.5	32.1	30.5	32.6	31.3
PLATELETS/MM3 X3	407.0	331.0	385.0	374.0	300.0
POLYS , %	19.0	28.0	59.0	38.0	49.0
BANDS , %	0.0	0.0	0.0	0.0	0.0
LYMPHOCYTES,%	79.0	71.0	38.0	57.0	47.0
MONOCYTES,%	2.0	0.0	2.0	3.0	3.0
EOSINOPHIL,%	0.0	1.0	1.0	1.0	1.0
BASOPHIL,%	0.0	0.0	0.0	1.0	0.0
LYMPHOCYTES ATYPICAL, %	0.0	0.0	0.0	0.0	0.0
NUCLEATED RBC/100WBC	0.0	0.0	0.0	0.0	0.0

KEY: * - ANIMAL DELIVERED PREMATURELY - BLOOD SAMPLES WERE NOT COLLECTED

NN - NOT PREGNANT : NEGATIVE STAIN, PD - PREGNANT : DELIVERED

INDIVIDUAL ANIMAL HEMATOLOGY DETERMINATION

EXPERIMENT # 880017T6 EXPERIMENT START DATE: 15-AUG-88 COMPOUND # 88-0017
SOFTWARE VERS # 3.0
ACCESSION NUMBER 907124

ANALYTICAL MATERIAL: BLOOD SAMPLE DAY # 29

250.000 PPM GROUP-F

ANIMAL #	431	432	433	434	435	436	437	438	439	440
WBC/MM3 X3	6.6	8.7	4.3	4.0	3.2	3.6	5.0	3.8	7.0	4.8
RBC/MM3 X6	6.4	6.0	5.8	5.4	5.3	5.7	6.4	6.8	5.6	4.7
HB CONC , G/DL	14.4	13.4	12.9	11.6	12.4	12.9	13.6	14.1	11.9	11.0
HCT , %	43.0	41.0	42.0	36.0	39.0	39.0	42.0	45.0	38.0	33.0
MCV , U3	67.0	68.0	72.0	67.0	74.0	68.0	65.0	66.0	68.0	70.0
MCH , UUG	22.6	22.3	22.1	21.5	23.4	22.6	21.1	20.8	21.2	23.2
MCHC , %	33.5	32.7	30.7	32.2	31.8	33.1	32.4	31.3	31.3	33.3
PLATELETS/MM3 X3	362.0	453.0	512.0	345.0	297.0	297.0	458.0	326.0	379.0	335.0
POLYS , %	50.0	73.0	35.0	46.0	32.0	23.0	38.0	22.0	53.0	63.0
BANDS , %	0.0	0.0	0.0	0.0	0.0	0.0	0.0	0.0	0.0	0.0
LYMPHOCYTES,%	49.0	26.0	63.0	50.0	61.0	75.0	58.0	75.0	44.0	37.0
MONOCYTES,%	0.0	1.0	0.0	2.0	3.0	0.0	2.0	0.0	3.0	0.0
EOSINOPHIL,%	0.0	0.0	0.0	1.0	0.0	0.0	1.0	1.0	0.0	0.0
BASOPHIL,%	0.0	0.0	1.0	0.0	2.0	2.0	1.0	0.0	0.0	0.0
LYMPHOCYTES ATYPICAL, %	1.0	0.0	1.0	1.0	2.0	0.0	0.0	1.0	0.0	0.0
NUCLEATED RBC/100WBC	0.0	0.0	0.0	0.0	0.0	0.0	0.0	0.0	0.0	0.0

ANIMAL #	441	442	443 NN	444 NN	445 NN
WBC/MM3 X3	3.9	3.6	*	*	*
RBC/MM3 X6	5.1	4.9			
HB CONC , G/DL	12.4	11.0			
HCT , %	38.0	36.0			
MCV , U3	74.0	73.0			
MCH , UUG	24.2	22.3			
MCHC , %	32.6	30.5			
PLATELETS/MM3 X3	442.0	316.0			
POLYS , %	31.0	21.0			
BANDS , %	0.0	0.0			
LYMPHOCYTES,%	69.0	78.0			
MONOCYTES,%	0.0	0.0			
EOSINOPHIL,%	0.0	1.0			
BASOPHIL,%	0.0	0.0			
LYMPHOCYTES ATYPICAL, %	0.0	0.0			
NUCLEATED RBC/100WBC	0.0	0.0			

KEY: * - ANIMALS NOT PREGNANT - BLOOD SAMPLES WERE NOT COLLECTED.

NN - NOT PREGNANT : NEGATIVE STAIN, PD - PREGNANT : DELIVERED

INDIVIDUAL ANIMAL HEMATOLOGY DETERMINATION

EXPERIMENT # 880017T6 EXPERIMENT START DATE: 15-AUG-88 COMPOUND # 88-0017
SOFTWARE VERS # 3.0
ACCESSION NUMBER 907124

ANALYTICAL MATERIAL: BLOOD SAMPLE DAY # 29

500.000 PPM GROUP-F

ANIMAL #	446	447 NN	448	449	450	451	452	453	454	455
WBC/MM3 X3	4.0	*	5.3	4.0	3.8	6.8	7.2	3.8	6.1	5.1
RBC/MM3 X6	4.9		5.2	5.4	5.2	5.5	5.0	5.8	6.8	5.6
HB CONC , G/DL	12.0		12.6	12.5	12.0	12.6	11.8	11.8	14.0	12.4
HCT , %	38.0		39.0	41.0	37.0	39.0	36.0	39.0	44.0	40.0
MCV , U3	78.0		75.0	76.0	71.0	70.0	72.0	67.0	65.0	71.0
MCH , UUG	24.7		21.5	23.2	22.9	22.7	23.5	20.5	20.7	22.0
MCHC , %	31.6		32.3	30.5	32.4	32.3	32.8	30.3	31.8	31.0
PLATELETS/MM3 X3	342.0		513.0	324.0	353.0	323.0	642.0	319.0	355.0	274.0
POLYS , %	31.0		26.0	43.0	31.0	39.0	58.0	41.0	39.0	51.0
BANDS , %	0.0		0.0	0.0	0.0	0.0	0.0	0.0	0.0	0.0
LYMPHOCYTES,%	64.0		63.0	52.0	67.0	58.0	38.0	57.0	59.0	46.0
MONOCYTES,%	1.0		2.0	3.0	1.0	2.0	3.0	0.0	0.0	2.0
EOSINOPHIL,%	0.0		1.0	1.0	0.0	0.0	0.0	0.0	0.0	0.0
BASOPHIL,%	4.0		8.0	1.0	1.0	1.0	1.0	2.0	1.0	0.0
LYMPHOCYTES ATYPICAL, %	0.0		0.0	0.0	0.0	0.0	0.0	0.0	1.0	1.0
NUCLEATED RBC/100WBC	0.0		0.0	0.0	0.0	0.0	0.0	0.0	0.0	0.0

ANIMAL #	456	457	458	459	460
WBC/MM3 X3	4.3	5.6	4.3	3.8	6.4
RBC/MM3 X6	5.2	5.3	5.1	4.9	5.4
HB CONC , G/DL	12.6	12.0	12.5	11.9	12.4
HCT , %	39.0	37.0	40.0	37.0	39.0
MCV , U3	75.0	70.0	79.0	76.0	72.0
MCH , UUG	24.1	22.6	24.6	24.4	22.8
MCHC , %	32.3	32.4	31.3	32.2	31.8
PLATELETS/MM3 X3	291.0	662.0	315.0	418.0	561.0
POLYS , %	40.0	19.0	48.0	18.0	38.0
BANDS , %	0.0	0.0	0.0	0.0	0.0
LYMPHOCYTES,%	54.0	79.0	51.0	81.0	61.0
MONOCYTES,%	4.0	0.0	0.0	0.0	0.0
EOSINOPHIL,%	0.0	0.0	1.0	0.0	0.0
BASOPHIL,%	0.0	2.0	0.0	1.0	1.0
LYMPHOCYTES ATYPICAL, %	2.0	0.0	0.0	0.0	0.0
NUCLEATED RBC/100WBC	0.0	0.0	0.0	0.0	0.0

KEY: * - ANIMALS NOT PREGNANT - BLOOD SAMPLES WERE NOT COLLECTED.

NN - NOT PREGNANT : NEGATIVE STAIN, PD - PREGNANT : DELIVERED

STUDY SUMMARY OF CELL MORPHOLOGY

EXPERIMENT # 880017T6 EXPERIMENT START DATE: 15-AUG-88 COMPOUND # 88-0017
SOFTWARE VERS # 3.0
ACCESSION NUMBER 907124

ANALYTICAL MATERIAL : BLOOD CELL MORPHOLOGY

DAY OF SAMPLE : 29

GROUP	0.000 PPM F	125.000 PPM F	250.000 PPM F	500.000 PPM F
BLOOD ERYTHROCYTES	15	14	12	14
HYPOCHROMASIA	1			
GHOST CELLS	1			
POLYCHROMASIA, INCREASED				1
MACROCYTOSIS				1
BLOOD LEUKOCYTES	15	14	12	14
BLOOD PLATELETS	15	14	12	14

Numbers represent number of tissues examined, or in the case of abnormal findings, the number of tissues with each abnormality.

INDIVIDUAL ANIMAL CELL MORPHOLOGY

EXPERIMENT # 880017T6 EXPERIMENT START DATE: 15-AUG-88 COMPOUND # 88-0017
SOFTWARE VERS # 3.0
ACCESSION NUMBER 907124

ANALYTICAL MATERIAL : BLOOD CELL MORPHOLOGY

DAY OF SAMPLE : 29

0.000 PPM F

ANIMAL #	401	402	403	404	405	406	407	408	409	410	411	412	413	414	415
BLOOD ERYTHROCYTES	N	N	N	N	N	N	N	N	N	N	N	N		N	N
HYPOCHROMASIA													2		
GHOST CELLS													1		
BLOOD LEUKOCYTES	N	N	N	N	N	N	N	N	N	N	N	N	N	N	N
BLOOD PLATELETS	N	N	N	N	N	N	N	N	N	N	N	N	N	N	N

125.000 PPM F

ANIMAL #	416	417	418	419	420	421	422	423	424	425	426	427	428	429	430
									PD						
BLOOD ERYTHROCYTES	N	N	N	N	N	N	N	N		N	N	N	N	N	N
BLOOD LEUKOCYTES	N	N	N	N	N	N	N	N		N	N	N	N	N	N
BLOOD PLATELETS	N	N	N	N	N	N	N	N		N	N	N	N	N	N

250.000 PPM F

ANIMAL #	431	432	433	434	435	436	437	438	439	440	441	442	443	444	445
													NN	NN	NN
BLOOD ERYTHROCYTES	N	N	N	N	N	N	N	N	N	N	N	N			
BLOOD LEUKOCYTES	N	N	N	N	N	N	N	N	N	N	N	N			
BLOOD PLATELETS	N	N	N	N	N	N	N	N	N	N	N	N			

500.000 PPM F

ANIMAL #	446	447	448	449	450	451	452	453	454	455	456	457	458	459	460
		NN													
BLOOD ERYTHROCYTES	N		N	N	N	N	N	N	N	N		N	N	N	N
POLYCHROMASIA, INCREASED											1				
MACROCYTOSIS											2				
BLOOD LEUKOCYTES	N		N	N	N	N	N	N	N	N	N	N	N	N	N
BLOOD PLATELETS	N		N	N	N	N	N	N	N	N	N	N	N	N	N

KEY:N-NORMAL,1-MINIMAL,2-MINOR,3-MODERATE,4-SEVERE,P-PRESENT,A-ABSENT

KEY: NN - NOT PREGNANT : NEGATIVE STAIN, PD - PREGNANT : DELIVERED

MEAN TERMINAL ORGAN WEIGHTS AND BODY WEIGHTS

EXPERIMENT # 880017T6 EXPERIMENT START DATE: 15-AUG-88 COMPOUND # 88-0017
SOFTWARE VERS # 3.0
ACCESSION NUMBER 907124

GROUP		0.000 PPM F	125.000 PPM F	250.000 PPM F	500.000 PPM F
BODY WEIGHT	(G)	3578.3 A	3576.1	3537.0	3577.8
		255.1 B	187.4	354.0	340.1
		15 C	14	12	14
KIDNEYS	(G)	16.6533	16.7308	17.5917	17.3929
		2.2357	1.8621	1.9426	1.5299
		15	13	12	14
	%	0.4653	0.4671	0.4987	0.4896
		0.0512	0.0421	0.0468	0.0557
		15	13	12	14
LIVER	(G)	80.9200	74.3500	79.2583	85.5786
		12.5677	8.0978	11.4235	14.7364
		15	14	12	14
	%	2.2723	2.0816	2.2461	2.4250
		0.3902	0.2275	0.2830	0.5512
		15	14	12	14
THYMUS	(G)	1.9067	2.1143	2.0000	2.4357
		0.8779	0.8822	0.9770	0.8652
		15	14	12	14
	%	0.0531	0.0587	0.0565	0.0690
		0.0234	0.0230	0.0271	0.0257
		15	14	12	14
SPLEEN	(G)	1.4800	1.8857 *	1.5333	1.4357
		0.2957	0.5882	0.3774	0.3692
		15	14	12	14
	%	0.0412	0.0523 *	0.0432	0.0402
		0.0070	0.0143	0.0090	0.0098
		15	14	12	14

NOTE: BODY WEIGHT IS CORRECTED BODY WEIGHT

KEY: A = MEAN VALUE
B = ± STANDARD DEVIATION
C = NUMBER OF VALUES PER GROUP
* = STATISTICALLY DIFFERENT FROM CONTROLS ($P \leq 0.05$), ONE-WAY ANOVA

INDIVIDUAL ANIMAL ORGAN WEIGHTS AND TERMINAL BODY WEIGHT

EXPERIMENT # 880017T6 EXPERIMENT START DATE: 15-AUG-88 COMPOUND # 88-0017
SOFTWARE VERS # 3.0
ACCESSION NUMBER 907124

0.000 PPM GROUP - F

ANIMAL #		401	402	403	404	405	406	407	408	409	410
BODY WEIGHT	(G)	3810.5	3116.1	3666.0	3603.4	3255.1	3301.4	3668.8	3920.8	3388.0	3670.7
KIDNEYS	(G)	16.5000	14.7000	19.1000	16.1000	17.1000	15.1000	19.8000	19.3000	14.7000	14.6000
	%	0.4330	0.4717	0.5210	0.4468	0.5253	0.4574	0.5397	0.4922	0.4339	0.3977
LIVER	(G)	78.5000	83.0000	115.1000	73.0000	91.2000	79.8000	81.0000	82.8000	66.3000	77.7000
	%	2.0601	2.6636	3.1397	2.0259	2.8018	2.4172	2.2078	2.1118	1.9569	2.1168
THYMUS	(G)	0.8000	1.9000	2.3000	0.9000	0.9000	1.1000	1.9000	3.2000	1.4000	3.4000
	%	0.0210	0.0610	0.0627	0.0250	0.0276	0.0333	0.0518	0.0816	0.0413	0.0926
SPLEEN	(G)	1.6000	1.5000	1.4000	1.9000	0.9000	1.1000	1.3000	1.6000	1.4000	1.9000
	%	0.0420	0.0481	0.0382	0.0527	0.0276	0.0333	0.0354	0.0408	0.0413	0.0518

ANIMAL #		411	412	413	414	415
BODY WEIGHT	(G)	3434.2	3512.0	4044.7	3769.4	3513.1
KIDNEYS	(G)	15.9000	12.2000	18.6000	19.5000	16.6000
	%	0.4630	0.3474	0.4599	0.5173	0.4725
LIVER	(G)	94.7000	63.4000	81.5000	75.1000	70.7000
	%	2.7576	1.8052	2.0150	1.9924	2.0125
THYMUS	(G)	1.3000	2.8000	1.4000	2.5000	2.8000
	%	0.0379	0.0797	0.0346	0.0663	0.0797
SPLEEN	(G)	1.5000	1.4000	2.0000	1.4000	1.3000
	%	0.0437	0.0399	0.0494	0.0371	0.0370

125.000 PPM GROUP - F

ANIMAL #		416	417	418	419	420	421	422	423	424 PD	425
BODY WEIGHT	(G)	3656.4	3517.1	3236.5	3782.1	3387.5	3426.6	3541.3	3527.3	*	3663.6
KIDNEYS	(G)	17.9000	14.8000	13.5000	16.1000	16.9000	17.3000	18.9000	#		15.7000
	%	0.4896	0.4208	0.4171	0.4257	0.4989	0.5049	0.5337			0.4285
LIVER	(G)	76.3000	66.8000	66.2000	83.5000	80.4000	87.5000	66.2000	67.7000		89.9000
	%	2.0868	1.8993	2.0454	2.2078	2.3734	2.5536	1.8694	1.9193		2.4539
THYMUS	(G)	2.0000	1.5000	2.2000	1.6000	1.3000	1.4000	1.2000	2.7000		2.9000
	%	0.0547	0.0426	0.0680	0.0423	0.0384	0.0409	0.0339	0.0765		0.0792
SPLEEN	(G)	1.8000	1.2000	1.4000	2.7000	1.2000	1.6000	1.6000	2.1000		1.6000
	%	0.0492	0.0341	0.0433	0.0714	0.0354	0.0467	0.0452	0.0595		0.0437

ANIMAL #		426	427	428	429	430
BODY WEIGHT	(G)	3531.6	3927.3	3388.4	3793.1	3686.2
KIDNEYS	(G)	15.8000	19.4000	15.8000	19.8000	15.6000
	%	0.4474	0.4940	0.4663	0.5220	0.4232
LIVER	(G)	69.9000	72.8000	67.6000	75.1000	71.0000
	%	1.9793	1.8537	1.9950	1.9799	1.9261
THYMUS	(G)	1.7000	3.4000	1.6000	1.9000	4.2000
	%	0.0481	0.0866	0.0472	0.0501	0.1139
SPLEEN	(G)	1.9000	2.8000	2.1000	3.0000	1.4000
	%	0.0538	0.0713	0.0620	0.0791	0.0380

NOTE: BODY WEIGHT IS CORRECTED BODY WEIGHT (TERMINAL BODY WEIGHT MINUS GRAVID UTERINE WEIGHT)

KEY: NN - NOT PREGNANT : NEGATIVE STAIN, PD - PREGNANT : DELIVERED

* - ANIMAL DELIVERED PREMATURELY - TISSUE SAMPLES WERE NOT COLLECTED

\# - RIGHT KIDNEY APLASTIC. THEREFORE, THE KIDNEY WEIGHTS FOR THIS ANIMAL WERE NOT INCLUDED IN THE CALCULATIONS.

INDIVIDUAL ANIMAL ORGAN WEIGHTS AND TERMINAL BODY WEIGHT

EXPERIMENT # 880017T6 EXPERIMENT START DATE: 15-AUG-88 COMPOUND # 88-0017
SOFTWARE VERS # 3.0
ACCESSION NUMBER 907124

250.000 PPM GROUP - F

ANIMAL #		431	432	433	434	435	436	437	438	439	440
BODY WEIGHT	(G)	3101.1	4324.1	3724.5	3305.2	3378.8	3614.4	3349.3	3509.8	3898.0	3025.0
KIDNEYS	(G)	18.7000	21.2000	18.8000	16.4000	18.4000	15.3000	16.6000	17.4000	18.0000	14.4000
	%	0.6030	0.4903	0.5048	0.4962	0.5446	0.4233	0.4956	0.4958	0.4618	0.4760
LIVER	(G)	87.7000	100.7000	87.5000	73.6000	69.3000	73.7000	79.1000	74.5000	79.0000	69.5000
	%	2.8280	2.3288	2.3493	2.2268	2.0510	2.0391	2.3617	2.1226	2.0267	2.2975
THYMUS	(G)	1.2000	1.2000	1.0000	0.3000	2.5000	3.7000	2.6000	2.6000	2.8000	1.3000
	%	0.0387	0.0278	0.0268	0.0091	0.0740	0.1024	0.0776	0.0741	0.0718	0.0430
SPLEEN	(G)	1.2000	1.8000	2.4000	1.4000	1.4000	1.7000	0.8000	1.6000	1.6000	1.4000
	%	0.0387	0.0416	0.0644	0.0424	0.0414	0.0470	0.0239	0.0456	0.0410	0.0463

ANIMAL #		441	442	443 NN	444 NN	445 NN
BODY WEIGHT	(G)	3679.4	3534.2	*	*	*
KIDNEYS	(G)	19.8000	16.1000			
	%	0.5381	0.4555			
LIVER	(G)	94.9000	61.6000			
	%	2.5792	1.7430			
THYMUS	(G)	2.5000	2.3000			
	%	0.0679	0.0651			
SPLEEN	(G)	1.5000	1.6000			
	%	0.0408	0.0453			

500.000 PPM GROUP - F

ANIMAL #		446	447 NN	448	449	450	451	452	453	454	455
BODY WEIGHT	(G)	3789.9	*	3635.3	3640.0	3886.7	3972.9	3615.2	3430.7	3379.9	2558.6
KIDNEYS	(G)	19.4000		18.8000	18.5000	18.6000	16.1000	18.1000	17.4000	18.0000	15.8000
	%	0.5119		0.5172	0.5082	0.4786	0.4052	0.5007	0.5072	0.5326	0.6175
LIVER	(G)	82.0000		87.6000	67.5000	93.9000	88.0000	77.4000	109.2000	115.0000	88.1000
	%	2.1636		2.4097	1.8544	2.4159	2.2150	2.1410	3.1830	3.4025	3.4433
THYMUS	(G)	1.7000		0.9000	1.8000	1.8000	2.2000	3.7000	1.7000	2.8000	2.6000
	%	0.0449		0.0248	0.0495	0.0463	0.0554	0.1023	0.0496	0.0828	0.1016
SPLEEN	(G)	1.8000		1.1000	1.5000	1.3000	1.2000	1.9000	1.6000	0.9000	0.9000
	%	0.0475		0.0303	0.0412	0.0334	0.0302	0.0526	0.0466	0.0266	0.0352

ANIMAL #		456	457	458	459	460
BODY WEIGHT	(G)	3714.7	3576.5	3809.2	3649.6	3430.4
KIDNEYS	(G)	18.5000	16.3000	16.1000	18.0000	13.9000
	%	0.4980	0.4558	0.4227	0.4932	0.4052
LIVER	(G)	85.7000	80.9000	62.2000	92.2000	68.4000
	%	2.3071	2.2620	1.6329	2.5263	1.9939
THYMUS	(G)	2.6000	2.1000	4.1000	3.1000	3.0000
	%	0.0700	0.0587	0.1076	0.0849	0.0875
SPLEEN	(G)	1.2000	1.7000	1.2000	2.0000	1.8000
	%	0.0323	0.0475	0.0315	0.0548	0.0525

NOTE: BODY WEIGHT IS CORRECTED BODY WEIGHT

KEY: NN - NOT PREGNANT : NEGATIVE STAIN, PD - PREGNANT : DELIVERED

* - ANIMAL DELIVERED PREMATURELY - BLOOD SAMPLES WERE NOT COLLECTED

Study No. 88-0017T6
Acc. No. 907124

PATHOLOGY REPORT

Compound: Ethylene Glycol Monopropyl Ether

Pregnant female rabbits exposed to 0, 125, 250, or 500 ppm of the test material by inhalation for six hours per day for 13 treatments over a 29-day period, as part of a developmental toxicity study, were necropsied. Necropsy lesions are listed in computer-generated tables.

GROSS PATHOLOGY

500, 250, and 125 ppm exposure groups: No treatment-related changes were observed in any of the groups. All rabbits survived the 29-day observation period.

No tissue was processed for microscopic examination.

Milan S. Vlaovic, D.V.M., Ph.D.

MSV:cpp
06/15/89

4812T

SUMMARY GROSS PATHOLOGY INCIDENCE TABLE

EXPERIMENT # 880017T6 EXPERIMENT START DATE: 15-AUG-88 COMPOUND # 88-0017
SOFTWARE VERS # 3.0
ACCESSION NUMBER 907124

GROUP	0.000 PPM F	125.000 PPM F	250.000 PPM F	500.000 PPM F
TRACHEA	15	15	15	15
LUNGS	15	15	15	15
HEART	15	15	15	15
ESOPHAGUS	15	15	15	15
STOMACH	15	15	15	15
DUODENUM	15	15	15	15
JEJUNUM	15	15	15	15
ILEUM	15	15	15	15
CECUM	15	15	15	15
COLON	15	15	15	15
URINARY BLADDER	15	15	15	15
PANCREAS, NOS	15	15	15	15
MESENTERIC LYMPH NODES	15	15	15	15
OVARIES	15	15	15	15
FALLOPIAN TUBES	15	15	15	15
UTERUS	15	15	15	15
VAGINA	15	15	15	15
KIDNEYS	15	15	15	15
RIGHT KIDNEY				
ABSENT OR MISSING	0	1	0	0
LIVER	15	15	15	15
ENLARGED,NOS	0	0	0	1
THYMUS	15	15	15	15
SPLEEN	15	15	15	15
ATROPHY	0	0	1	0
ABDOMINAL CAVITY	1	0	0	0
EFFUSION	1	0	0	0
EYES	1	0	0	0
LEFT EYE				
CORNEAL OPACITY	1	0	0	0

Numbers represent number of tissues examined, or in the case of abnormal findings, the number of tissues with each abnormality.

INDIVIDUAL ANIMAL GROSS PATHOLOGY INCIDENCE TABLE

EXPERIMENT # 880017T6 EXPERIMENT START DATE: 15-AUG-88 COMPOUND # 88-0017
SOFTWARE VERS # 3.0
ACCESSION NUMBER 907124

0.000 PPM GROUP - F

ANIMAL #	401	402	403	404	405	406	407	408	409	410
DAYS ON TEST	29	29	29	29	29	29	29	29	29	29
TRACHEA	X	X	X	X	X	X	X	X	X	X
LUNGS	X	X	X	X	X	X	X	X	X	X
HEART	X	X	X	X	X	X	X	X	X	X
ESOPHAGUS	X	X	X	X	X	X	X	X	X	X
STOMACH	X	X	X	X	X	X	X	X	X	X
DUODENUM	X	X	X	X	X	X	X	X	X	X
JEJUNUM	X	X	X	X	X	X	X	X	X	X
ILEUM	X	X	X	X	X	X	X	X	X	X
CECUM	X	X	X	X	X	X	X	X	X	X
COLON	X	X	X	X	X	X	X	X	X	X
URINARY BLADDER	X	X	X	X	X	X	X	X	X	X
PANCREAS, NOS	X	X	X	X	X	X	X	X	X	X
MESENTERIC LYMPH NODES	X	X	X	X	X	X	X	X	X	X
OVARIES	X	X	X	X	X	X	X	X	X	X
FALLOPIAN TUBES	X	X	X	X	X	X	X	X	X	X
UTERUS	X	X	X	X	X	X	X	X	X	X
VAGINA	X	X	X	X	X	X	X	X	X	X
KIDNEYS	N	N	N	N	N	N	N	N	N	N
LIVER	N	N	N	N	N	N	N	N	N	N
THYMUS	N	N	N	N	N	N	N	N	N	N
SPLEEN	N	N	N	N	N	N	N	N	N	N
* ABDOMINAL CAVITY EFFUSION		3								

KEY: NN - NOT PREGNANT : NEGATIVE STAIN, PD - PREGNANT : DELIVERED

KEY:N-NORMAL AND TISSUE COLLECTED FOR HISTOPATHOLOGY,1-MINIMAL,2-MINOR,3-MODERATE,4-SEVERE
P-PRESENT,A-ABSENT,*-SEE COMMENT REPORT (FORM #2), X=NORMAL BUT NOT COLLECTED

INDIVIDUAL ANIMAL GROSS PATHOLOGY INCIDENCE TABLE

EXPERIMENT # 880017T6 EXPERIMENT START DATE: 15-AUG-88 COMPOUND # 88-0017
SOFTWARE VERS # 3.0
ACCESSION NUMBER 907124

	0.000 PPM		GROUP - F		
ANIMAL #	411	412	413	414	415
DAYS ON TEST	29	29	29	29	29
TRACHEA	X	X	X	X	X
LUNGS	X	X	X	X	X
HEART	X	X	X	X	X
ESOPHAGUS	X	X	X	X	X
STOMACH	X	X	X	X	X
DUODENUM	X	X	X	X	X
JEJUNUM	X	X	X	X	X
ILEUM	X	X	X	X	X
CECUM	X	X	X	X	X
COLON	X	X	X	X	X
URINARY BLADDER	X	X	X	X	X
PANCREAS, NOS	X	X	X	X	X
MESENTERIC LYMPH NODES	X	X	X	X	X
OVARIES	X	X	X	X	X
FALLOPIAN TUBES	X	X	X	X	X
UTERUS	X	X	X	X	X
VAGINA	X	X	X	X	X
KIDNEYS	N	N	N	N	N
LIVER	N	N	N	N	N
THYMUS	N	N	N	N	N
SPLEEN	N	N	N	N	N
EYES					
LEFT EYE					
CORNEAL OPACITY			2		

KEY: NN - NOT PREGNANT : NEGATIVE STAIN, PD - PREGNANT : DELIVERED

KEY:N-NORMAL AND TISSUE COLLECTED FOR HISTOPATHOLOGY,1-MINIMAL,2-MINOR,3-MODERATE,4-SEVERE
P-PRESENT,A-ABSENT,*-SEE COMMENT REPORT (FORM #2), X=NORMAL BUT NOT COLLECTED

INDIVIDUAL ANIMAL GROSS PATHOLOGY INCIDENCE TABLE

EXPERIMENT # 880017T6 EXPERIMENT START DATE: 15-AUG-88 COMPOUND # 88-0017
SOFTWARE VERS # 3.0
ACCESSION NUMBER 907124

125.000 PPM GROUP - F

ANIMAL #	416	417	418	419	420	421	422	423	424 PD	425
DAYS ON TEST	29	29	29	29	29	29	29	29	29	29
TRACHEA	X	X	X	X	X	X	X	X	X	X
LUNGS	X	X	X	X	X	X	X	X	X	X
HEART	X	X	X	X	X	X	X	X	X	X
ESOPHAGUS	X	X	X	X	X	X	X	X	X	X
STOMACH	X	X	X	X	X	X	X	X	X	X
DUODENUM	X	X	X	X	X	X	X	X	X	X
JEJUNUM	X	X	X	X	X	X	X	X	X	X
ILEUM	X	X	X	X	X	X	X	X	X	X
CECUM	X	X	X	X	X	X	X	X	X	X
COLON	X	X	X	X	X	X	X	X	X	X
URINARY BLADDER	X	X	X	X	X	X	X	X	X	X
PANCREAS, NOS	X	X	X	X	X	X	X	X	X	X
MESENTERIC LYMPH NODES	X	X	X	X	X	X	X	X	X	X
OVARIES	X	X	X	X	X	X	X	X	X	X
FALLOPIAN TUBES	X	X	X	X	X	X	X	X	X	X
UTERUS	X	X	X	X	X	X	X	X	X	X
VAGINA	X	X	X	X	X	X	X	X	X	X
* KIDNEYS	N	N	N	N	N	N	N		X	N
RIGHT KIDNEY ABSENT OR MISSING								P		
LIVER	N	N	N	N	N	N	N	N	X	N
THYMUS	N	N	N	N	N	N	N	N	X	N
SPLEEN	N	N	N	N	N	N	N	N	X	N

KEY: NN - NOT PREGNANT : NEGATIVE STAIN, PD - PREGNANT : DELIVERED

KEY:N-NORMAL AND TISSUE COLLECTED FOR HISTOPATHOLOGY,1-MINIMAL,2-MINOR,3-MODERATE,4-SEVERE
P-PRESENT,A-ABSENT,*-SEE COMMENT REPORT (FORM #2), X=NORMAL BUT NOT COLLECTED

INDIVIDUAL ANIMAL GROSS PATHOLOGY INCIDENCE TABLE

EXPERIMENT # 880017T6 EXPERIMENT START DATE: 15-AUG-88 COMPOUND # 88-0017
SOFTWARE VERS # 3.0
ACCESSION NUMBER 907124

125.000 PPM GROUP - F

ANIMAL #	426	427	428	429	430
DAYS ON TEST	29	29	29	29	29
TRACHEA	X	X	X	X	X
LUNGS	X	X	X	X	X
HEART	X	X	X	X	X
ESOPHAGUS	X	X	X	X	X
STOMACH	X	X	X	X	X
DUODENUM	X	X	X	X	X
JEJUNUM	X	X	X	X	X
ILEUM	X	X	X	X	X
CECUM	X	X	X	X	X
COLON	X	X	X	X	X
URINARY BLADDER	X	X	X	X	X
PANCREAS, NOS	X	X	X	X	X
MESENTERIC LYMPH NODES	X	X	X	X	X
OVARIES	X	X	X	X	X
FALLOPIAN TUBES	X	X	X	X	X
UTERUS	X	X	X	X	X
VAGINA	X	X	X	X	X
KIDNEYS	N	N	N	N	N
LIVER	N	N	N	N	N
THYMUS	N	N	N	N	N
SPLEEN	N	N	N	N	N

KEY: NN - NOT PREGNANT : NEGATIVE STAIN, PD - PREGNANT : DELIVERED

KEY:N-NORMAL AND TISSUE COLLECTED FOR HISTOPATHOLOGY,1-MINIMAL,2-MINOR,3-MODERATE,4-SEVERE
P-PRESENT,A-ABSENT,*-SEE COMMENT REPORT (FORM #2), X=NORMAL BUT NOT COLLECTED

INDIVIDUAL ANIMAL GROSS PATHOLOGY INCIDENCE TABLE

EXPERIMENT # 880017T6 EXPERIMENT START DATE: 15-AUG-88 COMPOUND # 88-0017
SOFTWARE VERS # 3.0
ACCESSION NUMBER 907124

250.000 PPM GROUP - F

ANIMAL #	431	432	433	434	435	436	437	438	439	440
DAYS ON TEST	29	29	29	29	29	29	29	29	29	29
TRACHEA	X	X	X	X	X	X	X	X	X	X
LUNGS	X	X	X	X	X	X	X	X	X	X
HEART	X	X	X	X	X	X	X	X	X	X
ESOPHAGUS	X	X	X	X	X	X	X	X	X	X
STOMACH	X	X	X	X	X	X	X	X	X	X
DUODENUM	X	X	X	X	X	X	X	X	X	X
JEJUNUM	X	X	X	X	X	X	X	X	X	X
ILEUM	X	X	X	X	X	X	X	X	X	X
CECUM	X	X	X	X	X	X	X	X	X	X
COLON	X	X	X	X	X	X	X	X	X	X
URINARY BLADDER	X	X	X	X	X	X	X	X	X	X
PANCREAS, NOS	X	X	X	X	X	X	X	X	X	X
MESENTERIC LYMPH NODES	X	X	X	X	X	X	X	X	X	X
OVARIES	X	X	X	X	X	X	X	X	X	X
FALLOPIAN TUBES	X	X	X	X	X	X	X	X	X	X
UTERUS	X	X	X	X	X	X	X	X	X	X
VAGINA	X	X	X	X	X	X	X	X	X	X
KIDNEYS	N	N	N	N	N	N	N	N	N	N
LIVER	N	N	N	N	N	N	N	N	N	N
THYMUS	N	N	N	N	N	N	N	N	N	N
SPLEEN	N	N	N	N	N	N		N	N	N
ATROPHY							1			

KEY: NN - NOT PREGNANT : NEGATIVE STAIN, PD - PREGNANT : DELIVERED

KEY:N-NORMAL AND TISSUE COLLECTED FOR HISTOPATHOLOGY,1-MINIMAL,2-MINOR,3-MODERATE,4-SEVERE
P-PRESENT,A-ABSENT,*-SEE COMMENT REPORT (FORM #2), X=NORMAL BUT NOT COLLECTED

INDIVIDUAL ANIMAL GROSS PATHOLOGY INCIDENCE TABLE

EXPERIMENT # 880017T6 EXPERIMENT START DATE: 15-AUG-88 COMPOUND # 88-0017
SOFTWARE VERS # 3.0
ACCESSION NUMBER 907124

250.000 PPM GROUP - F

ANIMAL #	441	442	443 NN	444 NN	445 NN
DAYS ON TEST	29	29	29	29	29
TRACHEA	X	X	X	X	X
LUNGS	X	X	X	X	X
HEART	X	X	X	X	X
ESOPHAGUS	X	X	X	X	X
STOMACH	X	X	X	X	X
DUODENUM	X	X	X	X	X
JEJUNUM	X	X	X	X	X
ILEUM	X	X	X	X	X
CECUM	X	X	X	X	X
COLON	X	X	X	X	X
URINARY BLADDER	X	X	X	X	X
PANCREAS, NOS	X	X	X	X	X
MESENTERIC LYMPH NODES	X	X	X	X	X
OVARIES	X	X	X	X	X
FALLOPIAN TUBES	X	X	X	X	X
UTERUS	X	X	X	X	X
VAGINA	X	X	X	X	X
KIDNEYS	N	N	N	N	N
LIVER	N	N	N	N	N
THYMUS	N	N	N	N	N
SPLEEN	N	N	N	N	N

KEY: NN - NOT PREGNANT : NEGATIVE STAIN, PD - PREGNANT : DELIVERED

KEY:N-NORMAL AND TISSUE COLLECTED FOR HISTOPATHOLOGY,1-MINIMAL,2-MINOR,3-MODERATE,4-SEVERE
P-PRESENT,A-ABSENT,*-SEE COMMENT REPORT (FORM #2), X=NORMAL BUT NOT COLLECTED

INDIVIDUAL ANIMAL GROSS PATHOLOGY INCIDENCE TABLE

EXPERIMENT # 880017T6 EXPERIMENT START DATE: 15-AUG-88 COMPOUND # 88-0017
SOFTWARE VERS # 3.0
ACCESSION NUMBER 907124

500.000 PPM GROUP - F

ANIMAL #	446	447 NN	448	449	450	451	452	453	454	455
DAYS ON TEST	29	29	29	29	29	29	29	29	29	29
TRACHEA	X	X	X	X	X	X	X	X	X	X
LUNGS	X	X	X	X	X	X	X	X	X	X
HEART	X	X	X	X	X	X	X	X	X	X
ESOPHAGUS	X	X	X	X	X	X	X	X	X	X
STOMACH	X	X	X	X	X	X	X	X	X	X
DUODENUM	X	X	X	X	X	X	X	X	X	X
JEJUNUM	X	X	X	X	X	X	X	X	X	X
ILEUM	X	X	X	X	X	X	X	X	X	X
CECUM	X	X	X	X	X	X	X	X	X	X
COLON	X	X	X	X	X	X	X	X	X	X
URINARY BLADDER	X	X	X	X	X	X	X	X	X	X
PANCREAS, NOS	X	X	X	X	X	X	X	X	X	X
MESENTERIC LYMPH NODES	X	X	X	X	X	X	X	X	X	X
OVARIES	X	X	X	X	X	X	X	X	X	X
FALLOPIAN TUBES	X	X	X	X	X	X	X	X	X	X
UTERUS	X	X	X	X	X	X	X	X	X	X
VAGINA	X	X	X	X	X	X	X	X	X	X
KIDNEYS	N	N	N	N	N	N	N	N	N	N
LIVER	N	N	N	N	N	N	N	N		N
ENLARGED,NOS									1	
THYMUS	N	N	N	N	N	N	N	N	N	N
SPLEEN	N	N	N	N	N	N	N	N	N	N

KEY: NN - NOT PREGNANT : NEGATIVE STAIN, PD - PREGNANT : DELIVERED

KEY:N-NORMAL AND TISSUE COLLECTED FOR HISTOPATHOLOGY,1-MINIMAL,2-MINOR,3-MODERATE,4-SEVERE
P-PRESENT,A-ABSENT,*-SEE COMMENT REPORT (FORM #2), X=NORMAL BUT NOT COLLECTED

INDIVIDUAL ANIMAL GROSS PATHOLOGY INCIDENCE TABLE

EXPERIMENT # 880017T6 EXPERIMENT START DATE: 15-AUG-88 COMPOUND # 88-0017
SOFTWARE VERS # 3.0
ACCESSION NUMBER 907124

500.000 PPM GROUP - F

ANIMAL #	456	457	458	459	460
DAYS ON TEST	29	29	29	29	29
TRACHEA	X	X	X	X	X
LUNGS	X	X	X	X	X
HEART	X	X	X	X	X
ESOPHAGUS	X	X	X	X	X
STOMACH	X	X	X	X	X
DUODENUM	X	X	X	X	X
JEJUNUM	X	X	X	X	X
ILEUM	X	X	X	X	X
CECUM	X	X	X	X	X
COLON	X	X	X	X	X
URINARY BLADDER	X	X	X	X	X
PANCREAS, NOS	X	X	X	X	X
MESENTERIC LYMPH NODES	X	X	X	X	X
OVARIES	X	X	X	X	X
FALLOPIAN TUBES	X	X	X	X	X
UTERUS	X	X	X	X	X
VAGINA	X	X	X	X	X
KIDNEYS	N	N	N	N	N
LIVER	N	N	N	N	N
THYMUS	N	N	N	N	N
SPLEEN	N	N	N	N	N

KEY: NN - NOT PREGNANT : NEGATIVE STAIN, PD - PREGNANT : DELIVERED

KEY:N-NORMAL AND TISSUE COLLECTED FOR HISTOPATHOLOGY,1-MINIMAL,2-MINOR,3-MODERATE,4-SEVERE
P-PRESENT,A-ABSENT,*-SEE COMMENT REPORT (FORM #2), X=NORMAL BUT NOT COLLECTED

GROSS PATHOLOGY COMMENT REPORT

EXPERIMENT # 880017T6 EXPERIMENT START DATE: 15-AUG-88 COMPOUND # 88-0017
SOFTWARE VERS # 3.0
ACCESSION NUMBER 907124

DAY	DOSE LEVEL	ANIMAL #	COMMENT
29	0.000 PPM	402	ABDOMINAL CAVITY FILLED WITH APPROX. 50 ML. OF CLEAR FLUID.
36	125.000 PPM	423	RIGHT KIDNEY - COMPLETE APLASIA

INDIVIDUAL FEMALE DATA COLLECTED AT CESARIAN SECTION

HAEL NO. 88-0017 ACCESSION NO. 907124 EXPERIMENT NO. 880017T6

START DATE: 15-AUG-88 ROUTE: INHALATION DOSE: CONTROL REPORT DATE: 06-JUN-89

DAM'S STUDY	NUMBER EAR TAG	PREGNANT STATUS	GRAVID UTERINE WEIGHT (g)	CORPORA LUTEA LEFT	CORPORA LUTEA RIGHT	IMPLANTATIONS LEFT	IMPLANTATIONS RIGHT	COMMENT
401	G8210	PF	532.50	4	5	4	5	
402	G8213	PF	316.90	5	4	5	4	
403	G8205	PF	413.00	7	2	7	2	
404	G8193	PF	565.60	3	6	3	6	
405	G8182	PF	447.90	5	5	5	5	
406	G8232	PF	568.60	4	6	4	6	
407	G8240	PF	440.20	4	5	4	5	
408	G8212	PF	561.20	7	3	7	3	
409	G8224	PF	590.00	4	8	4	8	
410	G8241	PF	456.30	4	5	4	5	
411	G8226	PF	385.80	4	6	4	6	
412	G8231	PF	181.00	2	4	0	2	
413	G8194	PF	626.30	4	7	4	7	
414	G8223	PF	444.60	5	3	5	3	
415	G8238	PF	566.90	3	5	3	5	

KEY: NB – NOT BRED, NP – NOT PREGNANT : POSITIVE STAIN, NN – NOT PREGNANT : NEGATIVE STAIN, PA – PREGNANT : ABORTED, PD – PREGNANT : DELIVERED, PF – PREGNANT : FULL TERM

INDIVIDUAL FEMALE DATA COLLECTED AT CESARIAN SECTION

HAEL NO. 88-0017 ACCESSION NO. 907124 EXPERIMENT NO. 880017T6

START DATE: 15-AUG-88 ROUTE: INHALATION DOSE: 125.000PPM REPORT DATE: 06-JUN-89

DAM'S STUDY	NUMBER EAR TAG	PREGNANT STATUS	GRAVID UTERINE WEIGHT (g)	CORPORA LUTEA LEFT	CORPORA LUTEA RIGHT	IMPLANTATIONS LEFT	IMPLANTATIONS RIGHT	COMMENT
416	G8199	PF	265.60	4	3	4	0	
417	G8215	PF	456.90	6	5	6	5	
418	G8204	PF	429.50	5	3	5	3	
419	G8188	PF	444.90	5	4	5	4	
420	G8186	PF	585.50	2	9	2	9	
421	G8196	PF	577.40	4	6	4	6	
422	G8206	PF	565.70	5	5	5	5	
423	G8195	PF	394.70	3	5	3	4	
424	G8217	PD	0.00	0	0	0	0	
425	G8201	PF	384.40	3	6	3	5	
426	G8229	PF	89.40	4	3	1	0	
427	G8216	PF	572.70	4	5	4	5	
428	G8190	PF	539.60	4	5	4	4	
429	G8185	PF	626.90	7	6	7	6	
430	G8222	PF	561.80	3	9	3	9	

KEY: NB – NOT BRED, NP – NOT PREGNANT : POSITIVE STAIN, NN – NOT PREGNANT : NEGATIVE STAIN, PA – PREGNANT : ABORTED, PD – PREGNANT : DELIVERED, PF – PREGNANT : FULL TERM

INDIVIDUAL FEMALE DATA COLLECTED AT CESARIAN SECTION

HAEL NO. 88-0017 ACCESSION NO. 907124 EXPERIMENT NO. 880017T6

START DATE: 15-AUG-88 ROUTE: INHALATION DOSE: 250.000PPM REPORT DATE: 06-JUN-89

DAM'S NUMBER STUDY	EAR TAG	PREGNANT STATUS	GRAVID UTERINE WEIGHT (g)	CORPORA LUTEA LEFT	CORPORA LUTEA RIGHT	IMPLANTATIONS LEFT	IMPLANTATIONS RIGHT	COMMENT
431	G8209	PF	303.90	6	6	5	6	
432	G8202	PF	415.90	0	8	0	6	
433	G8184	PF	630.50	6	4	7	4	
434	G8180	PF	607.80	4	5	4	5	
435	G8200	PF	561.20	2	7	2	8	
436	G8183	PF	267.60	3	6	3	2	
437	G8208	PF	525.70	4	5	4	5	
438	G8243	PF	354.20	4	4	3	4	
439	G8221	PF	420.00	6	2	5	2	
440	G8225	PF	402.00	4	5	3	5	
441	G8187	PF	518.60	3	10	3	10	
442	G8234	PF	467.80	7	3	6	3	
443	G8181	NN	0.00	0	0	0	0	
444	G8237	NN	0.00	0	0	0	0	
445	G8203	NN	0.00	0	0	0	0	

KEY: NB – NOT BRED, NP – NOT PREGNANT : POSITIVE STAIN, NN – NOT PREGNANT : NEGATIVE STAIN, PA – PREGNANT : ABORTED, PD – PREGNANT : DELIVERED, PF – PREGNANT : FULL TERM

INDIVIDUAL FEMALE DATA COLLECTED AT CESARIAN SECTION

HAEL NO. 88-0017 ACCESSION NO. 907124 EXPERIMENT NO. 880017T6

START DATE: 15-AUG-88 ROUTE: INHALATION DOSE: 500.000PPM REPORT DATE: 06-JUN-89

DAM'S NUMBER STUDY	EAR TAG	PREGNANT STATUS	GRAVID UTERINE WEIGHT (g)	CORPORA LUTEA LEFT	CORPORA LUTEA RIGHT	IMPLANTATIONS LEFT	IMPLANTATIONS RIGHT	COMMENT
446	G8207	PF	532.10	6	8	5	7	
447	G8214	NN	0.00	0	0	0	0	
448	G8198	PF	251.70	2	7	0	4	
449	G8189	PF	472.00	4	6	4	6	
450	G8191	PF	579.30	6	5	6	5	
451	G8192	PF	328.10	3	5	1	4	
452	G8242	PF	475.80	5	3	5	4	
453	G8218	PF	478.30	6	3	6	3	
454	G8233	PF	406.10	3	8	0	9	
455	G8239	PF	392.40	8	3	8	3	
456	G8227	PF	432.30	5	6	5	6	
457	G8228	PF	341.50	3	5	3	4	
458	G8227	PF	438.80	4	6	4	6	
459	G8236	PF	275.40	5	6	5	5	
460	G8230	PF	296.60	3	5	2	4	

KEY: NB – NOT BRED, NP – NOT PREGNANT : POSITIVE STAIN, NN – NOT PREGNANT : NEGATIVE STAIN, PA – PREGNANT : ABORTED, PD – PREGNANT : DELIVERED, PF – PREGNANT : FULL TERM

INDIVIDUAL LITTER DATA COLLECTED AT CESARIAN SECTION

HAEL NO. 88-0017 ACCESSION NO. 907124 EXPERIMENT NO. 880017T6

START DATE: 15-AUG-88 ROUTE: INHALATION DOSE: CONTROL REPORT DATE: 06-JUN-89

DAM'S STUDY	NUMBER EAR TAG	NUMBER CORPORA LUTEA	IMPLANTATIONS NO.	VIABLE FETUSES NO.	RESORPTIONS EARLY NO.	RESORPTIONS LATE NO.	DEAD FETUSES NO.	POST IMPLANTATION LOSS NO.	SEX NO. MALES	SEX NO. FEMALES	SEX M:F RATIO	MEAN FETAL BODY WEIGHT MALE	MEAN FETAL BODY WEIGHT FEMALE	MEAN FETAL BODY WEIGHT M & F	GRAVID UTERINE WT. GRAMS	CORRECTED BODY WT. (g)
401	G8210	9	9	8	1	0	0	1	5	3	63: 38	48.17	44.19	46.68	532.50	3810.50
402	G8213	9	9	7	2	0	0	2	4	3	57: 43	30.66	29.77	30.28	316.90	3116.10
403	G8205	9	9	9	0	0	0	0	6	3	67: 33	28.78	31.48	29.68	413.00	3666.00
404	G8193	9	9	9	0	0	0	0	5	4	56: 44	42.30	44.78	43.40	565.60	3603.40
405	G8182	10	10	10	0	0	0	0	7	3	70: 30	30.98	30.60	30.87	447.90	3255.10
406	G8232	10	10	10	0	0	0	0	3	7	30: 70	36.55	36.90	36.79	568.60	3301.40
407	G8240	9	9	8	1	0	0	1	2	6	25: 75	39.58	39.44	39.47	440.20	3668.80
408	G8212	10	10	10	0	0	0	0	4	6	40: 60	38.55	40.26	39.58	561.20	3920.80
409	G8224	12	12	10	2	0	0	2	5	5	50: 50	42.27	39.77	41.02	590.00	3388.00
410	G8241	9	9	7	2	0	0	2	4	3	57: 43	47.61	43.36	45.79	456.30	3670.70
411	G8226	10	10	10	0	0	0	0	4	6	40: 60	28.24	25.25	26.44	385.80	3434.20
412	G8231	6	2	2	0	0	0	0	2	0	100: 0	53.49	—	53.49	181.00	3512.00
413	G8194	11	11	11	0	0	0	0	5	6	45: 55	40.59	40.45	40.51	626.30	4044.70
414	G8223	8	8	7	0	1	0	1	3	4	43: 57	45.04	42.92	43.83	444.60	3769.40
415	G8238	8	8	8	0	0	0	0	4	4	50: 50	47.60	48.41	48.01	566.90	3513.10
	MEAN	9.3	9.0	8.4	0.5	0.1	0.0	0.6	4.2	4.2	50: 50	40.03	38.40	39.72	473.12	3578.28
	SD	1.4	2.2	2.2	0.8	0.3	0.0	0.8	1.4	1.8	—	7.78	6.73	7.70	119.12	255.05

INDIVIDUAL LITTER DATA COLLECTED AT CESARIAN SECTION

HAEL NO. 88-0017 ACCESSION NO. 907124 EXPERIMENT NO. 880017T6

START DATE: 15-AUG-88 ROUTE: INHALATION DOSE: 125.000PPM REPORT DATE: 06-JUN-89

DAM'S STUDY	NUMBER EAR TAG	NUMBER CORPORA LUTEA	IMPLAN-TATIONS NO.	VIABLE FETUSES NO.	RESORPTIONS EARLY NO.	RESORPTIONS LATE NO.	DEAD FETUSES NO.	POST IMPLAN-TATION LOSS NO.	SEX NO. MALES	SEX NO. FEMALES	M:F RATIO	MEAN FETAL BODY WEIGHT MALE	MEAN FETAL BODY WEIGHT FEMALE	MEAN FETAL BODY WEIGHT M & F	GRAVID UTERINE WT. GRAMS	CORRECTED BODY WT. (g)
416	G8199	7	4	4	0	0	0	0	2	2	50: 50	44.26	47.54	45.90	265.60	3656.40
417	G8215	11	11	9	1	1	0	2	5	4	56: 44	31.78	35.43	33.40	456.90	3517.10
418	G8204	8	8	8	0	0	0	0	3	5	38: 63	37.16	34.42	35.45	429.50	3236.50
419	G8188	9	9	7	1	1	0	2	3	4	43: 57	42.70	37.13	39.52	444.90	3782.10
420	G8186	11	11	11	0	0	0	0	4	7	36: 64	41.97	35.78	38.03	585.50	3387.50
421	G8196	10	10	10	0	0	0	0	5	5	50: 50	41.03	36.77	38.90	577.40	3426.60
422	G8206	10	10	10	0	0	0	0	6	4	60: 40	40.72	37.06	39.25	565.70	3541.30
423	G8195	8	7	6	1	0	0	1	1	5	17: 83	45.99	45.89	45.91	394.70	3527.30
424	G8217	PREMATURE DELIVERY				—	—	—	—	—	—	—	—	—	—	—
425	G8201	9	8	4	3	0	1	3	3	2	60: 40	49.94	49.20	49.64	384.40	3663.60
426	G8229	7	1	1	0	0	0	0	0	1	0:100	—	52.04	52.04	89.40	3531.60
427	G8216	9	9	9	0	0	0	0	5	4	56: 44	46.14	44.49	45.41	572.70	3927.30
428	G8190	9	8	8	0	0	0	0	4	4	50: 50	48.06	45.32	46.69	539.60	3388.40
429	G8185	13	13	10	2	1	0	3	7	3	70: 30	38.87	39.99	39.20	626.90	3793.10
430	G8222	12	12	10	0	2	0	2	7	3	70: 30	41.09	31.17	38.12	561.80	3686.20
	MEAN	9.5	8.6	7.6	0.6	0.4	0.1	0.9	3.9	3.8	51: 49	42.28	40.87	41.96	463.93	3576.07
	SD	1.8	3.2	2.9	0.9	0.6	0.3	1.2	2.1	1.5	—	4.82	6.41	5.56	147.81	187.42

INDIVIDUAL LITTER DATA COLLECTED AT CESARIAN SECTION

HAEL NO. 88-0017 ACCESSION NO. 907124 EXPERIMENT NO. 880017T6

START DATE: 15-AUG-88 ROUTE: INHALATION DOSE: 250.000PPM REPORT DATE: 06-JUN-89

DAM'S STUDY	NUMBER EAR TAG	NUMBER CORPORA LUTEA	IMPLANTATIONS NO.	VIABLE FETUSES NO.	RESORPTIONS EARLY NO.	RESORPTIONS LATE NO.	DEAD FETUSES NO.	POST IMPLANTATION LOSS NO.	SEX NO. MALES	SEX NO. FEMALES	SEX M:F RATIO	MEAN FETAL BODY WEIGHT MALE	MEAN FETAL BODY WEIGHT FEMALE	MEAN FETAL BODY WEIGHT M & F	GRAVID UTERINE WT. GRAMS	CORRECTED BODY WT. (g)
431	G8209	12	11	7	1	3	0	4	2	5	29: 71	21.98	19.28	20.05	303.90	3101.10
432	G8202	8	6	6	0	0	0	0	2	4	33: 67	49.97	46.71	47.79	415.90	4324.10
433	G8184	10	11	11	0	0	0	0	7	4	64: 36	39.48	41.17	40.10	630.50	3724.50
434	G8180	9	9	9	0	0	0	0	7	2	78: 22	48.89	43.28	47.64	607.80	3305.20
435	G8200	9	10	10	0	0	0	0	4	6	40: 60	37.92	32.52	34.68	561.20	3378.80
436	G8183	9	5	4	1	0	0	1	2	2	50: 50	47.43	44.16	45.80	267.60	3614.40
437	G8208	9	9	8	1	0	0	1	4	4	50: 50	48.17	45.67	46.92	525.70	3349.30
438	G8243	8	7	7	0	0	0	0	5	2	71: 29	35.25	37.20	35.81	354.20	3509.80
439	G8221	8	7	7	0	0	0	0	3	4	43: 57	44.64	40.84	42.47	420.00	3898.00
440	G8225	9	8	8	0	0	0	0	5	3	63: 38	36.72	33.09	35.36	402.00	3025.00
441	G8187	13	13	12	1	0	0	1	6	6	50: 50	31.28	30.46	30.87	518.60	3679.40
442	G8234	10	9	8	1	0	0	1	5	3	63: 38	40.81	35.96	38.99	467.80	3534.20
443	G8181	NOT PREGNANT - NEGATIVE STAIN				—	—	—	—	—	—	—	—	—	—	—
444	G8237	NOT PREGNANT - NEGATIVE STAIN				—	—	—	—	—	—	—	—	—	—	—
445	G8203	NOT PREGNANT - NEGATIVE STAIN				—	—	—	—	—	—	—	—	—	—	—
	MEAN	9.5	8.7	8.1	0.4	0.2	0.0	0.7	4.3	3.7	54: 46	40.21	37.53	38.87	456.27	3536.98
	SD	1.6	2.3	2.2	0.5	0.9	0.0	1.2	1.8	1.4	—	8.32	7.87	8.21	116.11	353.96

INDIVIDUAL LITTER DATA COLLECTED AT CESARIAN SECTION

HAEL NO. 88-0017 ACCESSION NO. 907124 EXPERIMENT NO. 880017T6

START DATE: 15-AUG-88 ROUTE: INHALATION DOSE: 500.000PPM REPORT DATE: 06-JUN-89

DAM'S STUDY	NUMBER EAR TAG	NUMBER CORPORA LUTEA	IMPLANTATIONS NO.	VIABLE FETUSES NO.	RESORPTIONS EARLY NO.	RESORPTIONS LATE NO.	DEAD FETUSES NO.	POST IMPLANTATION LOSS NO.	SEX NO. MALES	SEX NO. FEMALES	SEX M:F RATIO	MEAN FETAL BODY WEIGHT MALE	MEAN FETAL BODY WEIGHT FEMALE	MEAN FETAL BODY WEIGHT M & F	GRAVID UTERINE WT. GRAMS	CORRECTED BODY WT. (g)
446	G8207	14	12	10	2	0	0	2	8	2	80: 20	38.56	28.74	36.60	532.10	3789.90
447	G8214	NOT PREGNANT - NEGATIVE STAIN				—	—	—	—	—	—	—	—	—	—	—
448	G8198	9	4	4	0	0	0	0	2	2	50: 50	41.15	40.85	41.00	251.70	3635.30
449	G8189	10	10	9	1	0	0	1	5	4	56: 44	38.84	35.76	37.47	472.00	3640.00
450	G8191	11	11	11	0	0	0	0	5	6	45: 55	34.89	37.07	36.08	579.30	3886.70
451	G8192	8	5	5	0	0	0	0	2	3	40: 60	46.28	43.10	44.37	328.10	3972.90
452	G8242	8	9	8	1	0	0	1	0	8	0:100	—	41.35	41.35	475.80	3615.20
453	G8218	9	9	9	0	0	0	0	4	5	44: 56	38.30	36.68	37.40	478.30	3430.70
454	G8233	11	9	8	1	0	0	1	2	6	25: 75	42.94	33.33	35.73	406.10	3379.90
455	G8239	11	11	10	1	0	0	1	2	8	20: 80	26.71	24.16	24.67	392.40	2558.60
456	G8227	11	11	9	2	0	0	2	4	5	44: 56	34.11	27.96	30.69	432.30	3714.70
457	G8228	8	7	5	2	0	0	2	3	2	60: 40	45.98	46.69	46.26	341.50	3576.50
458	G8227	10	10	10	0	0	0	0	5	5	50: 50	31.44	29.97	30.70	438.80	3809.20
459	G8236	11	10	4	5	1	0	6	3	1	75: 25	39.47	46.05	41.11	275.40	3649.60
460	G8230	8	6	5	1	0	0	1	2	3	40: 60	45.34	36.93	40.29	296.60	3430.40
	MEAN	9.9	8.9	7.6	1.1	0.1	0.0	1.2	3.4	4.3	44: 56	38.77	36.33	37.41	407.17	3577.83
	SD	1.7	2.4	2.5	1.4	0.3	0.0	1.6	2.0	2.2	—	5.86	6.91	5.78	98.21	340.12

INDIVIDUAL LITTER DATA - EXTERNAL FETAL ALTERATIONS

KEY

SEX: M = Male F = Female U = Unknown

STATUS: A = Alive D = Dead E = Early Resorption
L = Late Resorption

EXTERNAL EXAM: N = Normal A = Abnormal

FIXATIVE: B = Bouin's A = Alcohol

INDIVIDUAL LITTER DATA - EXTERNAL FETAL ALTERATIONS

HAEL NO. 88-0017 ACCESSION NO. 907124 EXPERIMENT NO. 88001716
START DATE: 15-AUG-88 ROUTE: INHALATION DOSE: CONTROL REPORT DATE: 06-JUN-89

DAM	FETUS	LOCATION	SEX (M/F/U)	WEIGHT (GRAMS)	STATUS (A/D/E/L)	CROWN-RUMP LENGTH (MM)	EXTERNAL EXAM (N/A)	FIXATIVE (B/A/)
				ABNORMALITY			SEVERITY	
			COMMENT					
401	L 1		M	50.77	A	0.00	N	A
	L 2		F	44.55	A	0.00	N	A
	L 3		M	40.54	A	0.00	N	A
	L 4		F	43.11	A	0.00	N	A
	R 1		M	56.22	A	0.00	N	A
	R 2		U	0.00	E	0.00	A	
	R 3		M	47.88	A	0.00	N	A
	R 4		M	45.46	A	0.00	N	A
	R 5		F	44.92	A	0.00	N	A
402	L 1		M	30.59	A	0.00	N	A
	L 2		F	29.64	A	0.00	N	A
	L 3		M	28.07	A	0.00	N	A
	L 4		U	0.00	E	0.00	A	
	L 5		M	35.98	A	0.00	N	A
	R 1		M	28.01	A	0.00	N	A
	R 2		F	31.12	A	0.00	N	A
	R 3		F	28.55	A	0.00	N	A
	R 4		U	0.00	E	0.00	A	
403	L 1		F	32.30	A	0.00	N	A
	L 2		F	32.02	A	0.00	N	A
	L 3		F	30.13	A	0.00	N	A
	L 4		M	33.36	A	0.00	N	A
	L 5		M	28.34	A	0.00	N	A
	L 6		M	29.87	A	0.00	N	A
	L 7		M	18.18	A	0.00	A	A
		EYES			PROTRUSION		P	
		HEAD			ABNORMAL APPEARANCE		P	
				EYEBULGES PROTRUDING, HEAD APPEARS DOME-SHAPED.				
	R 1		M	31.23	A	0.00	N	A
	R 2		M	31.71	A	0.00	N	A
404	L 1		F	49.13	A	0.00	N	A
	L 2		M	43.43	A	0.00	N	A
	L 3		F	45.83	A	0.00	N	A
	R 1		M	49.87	A	0.00	N	A
	R 2		M	48.59	A	0.00	N	A
	R 3		F	44.68	A	0.00	N	A
	R 4		F	39.46	A	0.00	N	A
	R 5		M	31.10	A	0.00	N	A
	R 6		M	38.53	A	0.00	N	A
405	L 1		F	34.65	A	0.00	N	A
	L 2		M	29.30	A	0.00	N	A
	L 3		F	28.47	A	0.00	N	A
	L 4		M	22.31	A	0.00	N	A
	L 5		F	28.69	A	0.00	N	A
	R 1		M	36.54	A	0.00	N	A
	R 2		M	35.15	A	0.00	N	A
	R 3		M	36.63	A	0.00	N	A
	R 4		M	27.79	A	0.00	N	A
	R 5		M	29.14	A	0.00	N	A

KEY: N - EXAMINED AND NORMAL, 1 - MINIMAL, 2 - MINOR, 3 - MODERATE, 4 - SEVERE, P - PRESENT, A - ABSENT

INDIVIDUAL LITTER DATA - EXTERNAL FETAL ALTERATIONS

HAEL NO. 88-0017 ACCESSION NO. 907124 EXPERIMENT NO. 88001716
START DATE: 15-AUG-88 ROUTE: INHALATION DOSE: CONTROL REPORT DATE: 06-JUN-89

DAM	FETUS	LOCATION	SEX (M/F/U)	WEIGHT (GRAMS)	STATUS (A/D/E/L)	CROWN-RUMP LENGTH (MM)	EXTERNAL EXAM (N/A)	FIXATIVE (B/A/)
					ABNORMALITY		SEVERITY	
				COMMENT				
401	L 1		M	50.77	A	0.00	N	A
	L 2		F	44.55	A	0.00	N	A
	L 3		M	40.54	A	0.00	N	A
	L 4		F	43.11	A	0.00	N	A
	R 1		M	56.22	A	0.00	N	A
	R 2		U	0.00	E	0.00	A	
	R 3		M	47.88	A	0.00	N	A
	R 4		M	45.46	A	0.00	N	A
	R 5		F	44.92	A	0.00	N	A
402	L 1		M	30.59	A	0.00	N	A
	L 2		F	29.64	A	0.00	N	A
	L 3		M	28.07	A	0.00	N	A
	L 4		U	0.00	E	0.00	A	
	L 5		M	35.98	A	0.00	N	A
	R 1		M	28.01	A	0.00	N	A
	R 2		F	31.12	A	0.00	N	A
	R 3		F	28.55	A	0.00	N	A
	R 4		U	0.00	E	0.00	A	
403	L 1		F	32.30	A	0.00	N	A
	L 2		F	32.02	A	0.00	N	A
	L 3		F	30.13	A	0.00	N	A
	L 4		M	33.36	A	0.00	N	A
	L 5		M	28.34	A	0.00	N	A
	L 6		M	29.87	A	0.00	N	A
	L 7		M	18.18	A	0.00	A	A
		EYES			PROTRUSION		P	
		HEAD			ABNORMAL APPEARANCE		P	
				EYEBULGES PROTRUDING, HEAD APPEARS DOME-SHAPED.				
	R 1		M	31.23	A	0.00	N	A
	R 2		M	31.71	A	0.00	N	A
404	L 1		F	49.13	A	0.00	N	A
	L 2		M	43.43	A	0.00	N	A
	L 3		F	45.83	A	0.00	N	A
	R 1		M	49.87	A	0.00	N	A
	R 2		M	48.59	A	0.00	N	A
	R 3		F	44.68	A	0.00	N	A
	R 4		F	39.46	A	0.00	N	A
	R 5		M	31.10	A	0.00	N	A
	R 6		M	38.53	A	0.00	N	A
405	L 1		F	34.65	A	0.00	N	A
	L 2		M	29.30	A	0.00	N	A
	L 3		F	28.47	A	0.00	N	A
	L 4		M	22.31	A	0.00	N	A
	L 5		F	28.69	A	0.00	N	A
	R 1		M	36.54	A	0.00	N	A
	R 2		M	35.15	A	0.00	N	A
	R 3		M	36.63	A	0.00	N	A
	R 4		M	27.79	A	0.00	N	A
	R 5		M	29.14	A	0.00	N	A

KEY: N - EXAMINED AND NORMAL, 1 - MINIMAL, 2 - MINOR, 3 - MODERATE, 4 - SEVERE, P - PRESENT, A - ABSENT

INDIVIDUAL LITTER DATA - EXTERNAL FETAL ALTERATIONS

HAEL NO. 88-0017 ACCESSION NO. 907124 EXPERIMENT NO. 88001716
START DATE: 15-AUG-88 ROUTE: INHALATION DOSE: CONTROL REPORT DATE: 06-JUN-89

DAM	FETUS	LOCATION	SEX (M/F/U)	WEIGHT (GRAMS)	STATUS (A/D/E/L)	CROWN-RUMP LENGTH (MM)	EXTERNAL EXAM (N/A)	FIXATIVE (B/A/)
				COMMENT	ABNORMALITY		SEVERITY	
406	L 1		F	46.76	A	0.00	N	A
	L 2		M	42.09	A	0.00	N	A
	L 3		F	34.40	A	0.00	N	A
	L 4		M	33.11	A	0.00	N	A
	R 1		F	39.91	A	0.00	N	A
	R 2		F	37.39	A	0.00	N	A
	R 3		F	36.84	A	0.00	N	A
	R 4		F	28.78	A	0.00	N	A
	R 5		M	34.46	A	0.00	N	A
	R 6		F	34.19	A	0.00	N	A
407	L 1		U	0.00	E	0.00	A	
	L 2		F	39.24	A	0.00	N	A
	L 3		M	35.41	A	0.00	N	A
	L 4		F	42.80	A	0.00	N	A
	R 1		F	44.25	A	0.00	N	A
	R 2		M	43.74	A	0.00	N	A
	R 3		F	40.74	A	0.00	N	A
	R 4		F	31.82	A	0.00	N	A
	R 5		F	37.77	A	0.00	N	A
408	L 1		F	45.89	A	0.00	N	A
	L 2		F	42.74	A	0.00	N	A
	L 3		F	40.46	A	0.00	N	A
	L 4		F	38.95	A	0.00	N	A
	L 5		F	36.49	A	0.00	N	A
	L 6		M	37.74	A	0.00	N	A
	L 7		M	36.12	A	0.00	N	A
	R 1		F	37.04	A	0.00	N	A
	R 2		M	41.05	A	0.00	N	A
	R 3		M	39.28	A	0.00	N	A
409	L 1		F	47.36	A	0.00	N	A
	L 2		M	46.24	A	0.00	N	A
	L 3		F	47.32	A	0.00	N	A
	L 4		U	0.00	E	0.00	A	
	R 1		M	45.06	A	0.00	N	A
	R 2		M	39.62	A	0.00	N	A
	R 3		F	35.29	A	0.00	N	A
	R 4		F	41.72	A	0.00	N	A
	R 5		U	0.00	E	0.00	A	
	R 6		M	44.89	A	0.00	N	A
	R 7		F	27.15	A	0.00	N	A
	R 8		M	35.52	A	0.00	N	A
410	L 1		F	48.57	A	0.00	N	A
	L 2		U	0.00	E	0.00	A	
	L 3		M	45.44	A	0.00	N	A
	L 4		M	46.26	A	0.00	N	A
	R 1		M	48.93	A	0.00	N	A
	R 2		F	36.75	A	0.00	N	A
	R 3		U	0.00	E	0.00	A	
	R 4		M	49.81	A	0.00	N	A

KEY: N - EXAMINED AND NORMAL, 1 - MINIMAL, 2 - MINOR, 3 - MODERATE, 4 - SEVERE, P - PRESENT, A - ABSENT

INDIVIDUAL LITTER DATA - EXTERNAL FETAL ALTERATIONS

HAEL NO. 88-0017 ACCESSION NO. 907124 EXPERIMENT NO. 88001716
START DATE: 15-AUG-88 ROUTE: INHALATION DOSE: CONTROL REPORT DATE: 06-JUN-89

DAM	FETUS		SEX (M/F/U)	WEIGHT (GRAMS)	STATUS (A/D/E/L)	CROWN-RUMP LENGTH (MM)	EXTERNAL EXAM (N/A)	FIXATIVE (B/A/)
			LOCATION		ABNORMALITY		SEVERITY	
			COMMENT					
410	R	5	F	44.75	A	0.00	N	A
411	L	1	M	30.80	A	0.00	N	A
	L	2	F	31.06	A	0.00	N	A
	L	3	M	29.05	A	0.00	N	A
	L	4	F	20.92	A	0.00	N	A
	R	1	F	28.22	A	0.00	N	A
	R	2	M	31.68	A	0.00	N	A
	R	3	F	25.40	A	0.00	N	A
	R	4	F	21.51	A	0.00	N	A
	R	5	F	24.36	A	0.00	A	A
			RIGHT HINDLIMB		HEMATOMA		P	
	R	6	M	21.44	A	0.00	N	A
412	R	1	M	52.78	A	0.00	N	A
	R	2	M	54.19	A	0.00	N	A
413	L	1	F	42.82	A	0.00	N	A
	L	2	F	42.81	A	0.00	N	A
	L	3	F	38.38	A	0.00	N	A
	L	4	F	39.93	A	0.00	N	A
	R	1	M	43.29	A	0.00	N	A
	R	2	M	41.40	A	0.00	N	A
	R	3	M	41.09	A	0.00	N	A
	R	4	M	39.35	A	0.00	N	A
	R	5	M	37.83	A	0.00	N	A
	R	6	F	38.08	A	0.00	N	A
	R	7	F	40.68	A	0.00	N	A
414	L	1	F	39.46	A	0.00	N	A
	L	2	M	43.90	A	0.00	N	A
	L	3	F	41.79	A	0.00	N	A
	L	4	M	42.92	A	0.00	N	A
	L	5	M	48.31	A	0.00	N	A
	R	1	F	45.19	A	0.00	N	A
	R	2	F	45.25	A	0.00	N	A
	R	3	U	0.00	L	0.00	A	
415	L	1	F	52.87	A	0.00	N	A
	L	2	F	46.40	A	0.00	N	A
	L	3	M	45.95	A	0.00	N	A
	R	1	M	56.61	A	0.00	N	A
	R	2	F	52.58	A	0.00	N	A
	R	3	F	41.79	A	0.00	N	A
	R	4	M	41.20	A	0.00	N	A
	R	5	M	46.65	A	0.00	N	A

KEY: N - EXAMINED AND NORMAL, 1 - MINIMAL, 2 - MINOR, 3 - MODERATE, 4 - SEVERE, P - PRESENT, A - ABSENT

INDIVIDUAL LITTER DATA – EXTERNAL FETAL ALTERATIONS

HAEL NO. 88-0017 ACCESSION NO. 907124 EXPERIMENT NO. 88001716
START DATE: 15-AUG-88 ROUTE: INHALATION DOSE: 125.000PPM REPORT DATE: 06-JUN-89

DAM	FETUS	LOCATION	SEX (M/F/U)	WEIGHT (GRAMS)	STATUS (A/D/E/L)	CROWN-RUMP LENGTH (MM)	EXTERNAL EXAM (N/A)	FIXATIVE (B/A/)
				COMMENT	ABNORMALITY		SEVERITY	
416	L 1		F	50.01	A	0.00	N	A
	L 2		M	46.39	A	0.00	N	A
	L 3		M	42.12	A	0.00	N	A
	L 4		F	45.07	A	0.00	N	A
417	L 1		U	0.00	E	0.00	A	
	L 2		F	26.32	A	0.00	N	A
	L 3		M	35.68	A	0.00	N	A
	L 4		U	0.00	L	0.00	A	
	L 5		M	24.89	A	0.00	N	A
	L 6		F	37.39	A	0.00	N	A
	R 1		M	33.13	A	0.00	N	A
	R 2		F	39.05	A	0.00	N	A
	R 3		F	38.95	A	0.00	N	A
	R 4		M	30.47	A	0.00	N	A
	R 5		M	34.75	A	0.00	N	A
418	L 1		F	36.54	A	0.00	N	A
	L 2		F	32.34	A	0.00	N	A
	L 3		M	36.26	A	0.00	N	A
	L 4		M	32.78	A	0.00	N	A
	L 5		F	31.24	A	0.00	N	A
	R 1		M	42.45	A	0.00	N	A
	R 2		F	36.31	A	0.00	N	A
	R 3		F	35.67	A	0.00	N	A
419	L 1		M	43.37	A	0.00	N	A
	L 2		M	43.05	A	0.00	N	A
	L 3		M	41.67	A	0.00	N	A
	L 4		F	30.68	A	0.00	N	A
	L 5		F	36.51	A	0.00	N	A
	R 1		U	0.00	E	0.00	A	
	R 2		U	0.00	L	0.00	A	
	R 3		F	41.21	A	0.00	N	A
	R 4		F	40.12	A	0.00	N	A
420	L 1		M	50.47	A	0.00	N	A
	L 2		M	47.82	A	0.00	N	A
	R 1		F	37.72	A	0.00	N	A
	R 2		F	41.72	A	0.00	A	A
		LEFT EYE		LEFT EYEBULGE PROTRUDING.	PROTRUSION		P	
	R 3		F	34.30	A	0.00	N	A
	R 4		F	39.21	A	0.00	N	A
	R 5		F	37.25	A	0.00	N	A
	R 6		F	32.71	A	0.00	N	A
	R 7		F	27.53	A	0.00	N	A
	R 8		M	28.99	A	0.00	N	A
	R 9		M	40.60	A	0.00	N	A
421	L 1		M	46.57	A	0.00	N	A
	L 2		F	35.18	A	0.00	N	A
	L 3		M	43.91	A	0.00	N	A
	L 4		M	41.33	A	0.00	N	A

KEY: N – EXAMINED AND NORMAL, 1 – MINIMAL, 2 – MINOR, 3 – MODERATE, 4 – SEVERE, P – PRESENT, A – ABSENT

INDIVIDUAL LITTER DATA - EXTERNAL FETAL ALTERATIONS

HAEL NO. 88-0017 ACCESSION NO. 907124 EXPERIMENT NO. 880017T6
START DATE: 15-AUG-88 ROUTE: INHALATION DOSE: 125.000PPM REPORT DATE: 06-JUN-89

DAM	FETUS	LOCATION	SEX (M/F/U)	WEIGHT (GRAMS)	STATUS (A/D/E/L)	CROWN-RUMP LENGTH (MM)	EXTERNAL EXAM (N/A)	FIXATIVE (B/A/)
				COMMENT	ABNORMALITY		SEVERITY	
421	R 1		F	39.80	A	0.00	N	A
	R 2		F	34.92	A	0.00	N	A
	R 3		M	42.72	A	0.00	N	A
	R 4		F	37.63	A	0.00	N	A
	R 5		M	30.62	A	0.00	N	A
	R 6		F	36.31	A	0.00	N	A
422	L 1		M	46.44	A	0.00	N	A
	L 2		F	39.55	A	0.00	N	A
	L 3		F	37.25	A	0.00	N	A
	L 4		M	28.34	A	0.00	N	A
	L 5		F	32.90	A	0.00	N	A
	R 1		M	53.36	A	0.00	N	A
	R 2		M	49.36	A	0.00	N	A
	R 3		F	38.52	A	0.00	N	A
	R 4		M	31.87	A	0.00	N	A
	R 5		M	34.93	A	0.00	N	A
423	L 1		F	46.53	A	0.00	N	A
	L 2		F	46.86	A	0.00	N	A
	L 3		F	47.27	A	0.00	N	A
	R 1		F	43.61	A	0.00	N	A
	R 2		M	45.99	A	0.00	N	A
	R 3		F	45.20	A	0.00	N	A
	R 4		U	0.00	E	0.00	A	
425	L 1		M	54.83	A	0.00	N	A
	L 2		U	0.00	E	0.00	A	
	L 3		U	0.00	E	0.00	A	
	R 1		M	55.32	D	0.00	N	A
	R 2		F	47.99	A	0.00	N	A
	R 3		M	39.66	A	0.00	N	A
	R 4		U	0.00	E	0.00	A	
	R 5		F	50.41	A	0.00	N	A
426	L 1		F	52.04	A	0.00	N	A
427	L 1		M	46.31	A	0.00	N	A
	L 2		F	48.22	A	0.00	N	A
	L 3		M	47.18	A	0.00	N	A
	L 4		F	40.32	A	0.00	N	A
	R 1		F	44.01	A	0.00	N	A
	R 2		F	45.40	A	0.00	N	A
	R 3		M	46.73	A	0.00	N	A
	R 4		M	45.83	A	0.00	N	A
	R 5		M	44.67	A	0.00	N	A
428	L 1		F	45.74	A	0.00	N	A
	L 2		F	43.33	A	0.00	N	A
	L 3		M	45.98	A	0.00	N	A
	L 4		F	47.20	A	0.00	N	A
	R 1		M	50.98	A	0.00	N	A
	R 2		M	51.01	A	0.00	N	A
	R 3		M	44.27	A	0.00	N	A
	R 4		F	45.02	A	0.00	N	A

KEY: N - EXAMINED AND NORMAL, 1 - MINIMAL, 2 - MINOR, 3 - MODERATE, 4 - SEVERE, P - PRESENT, A - ABSENT

INDIVIDUAL LITTER DATA - EXTERNAL FETAL ALTERATIONS

HAEL NO. 88-0017 ACCESSION NO. 907124 EXPERIMENT NO. 88001716
START DATE: 15-AUG-88 ROUTE: INHALATION DOSE: 125.000PPM REPORT DATE: 06-JUN-89

DAM	FETUS	LOCATION	SEX (M/F/U)	WEIGHT (GRAMS)	STATUS (A/D/E/L)	ABNORMALITY	CROWN-RUMP LENGTH (MM)	EXTERNAL EXAM (N/A)	SEVERITY	FIXATIVE (B/A/)	COMMENT
429	L 1		M	35.78	A		0.00	N		A	
	L 2		M	37.49	A		0.00	N		A	
	L 3		U	0.00	L		0.00	A			
	L 4		M	43.14	A		0.00	N		A	
	L 5		F	39.82	A		0.00	N		A	
	L 6		F	37.74	A		0.00	N		A	
	L 7		M	31.01	A		0.00	N		A	
	R 1		U	0.00	E		0.00	A			
	R 2		M	45.22	A		0.00	N		A	
	R 3		U	0.00	E		0.00	A			
	R 4		M	37.91	A		0.00	N		A	
	R 5		F	42.41	A		0.00	N		A	
	R 6		M	41.51	A		0.00	N		A	
430	L 1		M	42.57	A		0.00	N		A	
	L 2		F	32.27	A		0.00	N		A	
	L 3		M	36.74	A		0.00	N		A	
	R 1		M	45.46	A		0.00	N		A	
	R 2		M	39.73	A		0.00	N		A	
	R 3		U	0.00	L		0.00	A			
	R 4		M	40.94	A		0.00	N		A	
	R 5		F	27.12	A		0.00	N		A	
	R 6		F	34.12	A		0.00	N		A	
	R 7		U	0.00	L		0.00	A			
	R 8		M	38.46	A		0.00	N		A	
	R 9		M	43.75	A		0.00	N		A	

KEY: N - EXAMINED AND NORMAL, 1 - MINIMAL, 2 - MINOR, 3 - MODERATE, 4 - SEVERE, P - PRESENT, A - ABSENT

INDIVIDUAL LITTER DATA – EXTERNAL FETAL ALTERATIONS

HAEL NO. 88-0017 ACCESSION NO. 907124 EXPERIMENT NO. 880017T6
START DATE: 15-AUG-88 ROUTE: INHALATION DOSE: 250.000PPM REPORT DATE: 06-JUN-89

DAM	FETUS		SEX (M/F/U)	WEIGHT (GRAMS)	STATUS (A/D/E/L)	CROWN-RUMP LENGTH (MM)	EXTERNAL EXAM (N/A)	FIXATIVE (B/A/)
		LOCATION			ABNORMALITY		SEVERITY	
		COMMENT						
431	L	1	F	35.23	A	0.00	N	A
	L	2	M	28.08	A	0.00	N	A
	L	3	U	0.00	L	0.00	A	
	L	4	F	15.15	A	0.00	N	A
	L	5	F	16.44	A	0.00	N	A
	R	1	F	12.99	A	0.00	N	A
	R	2	F	16.57	A	0.00	A	A
			LEFT HINDLIMB		HEMATOMA		P	
			RIGHT FORELIMB		MALPOSTION, NOS		P	
			HEMATOMA ON THE LEFT KNEE, MALROTATED RT. SHOULDER.					
	R	3	M	15.87	A	0.00	A	A
			EYES		PROTRUSION		P	
			HEAD		ABNORMAL APPEARANCE		P	
			EYEBULGE PROTRUDING, HEAD APPEARS DOME-SHAPED.					
	R	4	U	0.00	L	0.00	A	
	R	5	U	0.00	L	0.00	A	
	R	6	U	0.00	E	0.00	A	
432	R	1	F	47.16	A	0.00	N	A
	R	2	F	43.68	A	0.00	N	A
	R	3	F	48.51	A	0.00	N	A
	R	4	M	50.37	A	0.00	N	A
	R	5	F	47.47	A	0.00	N	A
	R	6	M	49.57	A	0.00	N	A
433	L	1	F	44.51	A	0.00	N	A
	L	2	M	42.14	A	0.00	N	A
	L	3	M	41.39	A	0.00	N	A
	L	4	M	41.26	A	0.00	N	A
	L	5	F	38.87	A	0.00	N	A
	L	6	M	32.79	A	0.00	N	A
	L	7	F	41.29	A	0.00	N	A
	R	1	F	40.00	A	0.00	N	A
	R	2	M	41.41	A	0.00	N	A
	R	3	M	37.75	A	0.00	N	A
	R	4	M	39.64	A	0.00	N	A
434	L	1	M	47.20	A	0.00	N	A
	L	2	M	55.36	A	0.00	N	A
	L	3	M	43.15	A	0.00	N	A
	L	4	M	48.51	A	0.00	N	A
	R	1	M	54.89	A	0.00	N	A
	R	2	M	48.65	A	0.00	N	A
	R	3	F	43.12	A	0.00	N	A
	R	4	F	43.44	A	0.00	N	A
	R	5	M	44.47	A	0.00	N	A
435	L	1	M	42.40	A	0.00	N	A
	L	2	F	38.06	A	0.00	N	A
	R	1	M	38.75	A	0.00	N	A
	R	2	F	36.60	A	0.00	N	A
	R	3	F	33.18	A	0.00	N	A
	R	4	M	33.47	A	0.00	N	A

KEY: N – EXAMINED AND NORMAL, 1 – MINIMAL, 2 – MINOR, 3 – MODERATE, 4 – SEVERE, P – PRESENT, A – ABSENT

INDIVIDUAL LITTER DATA - EXTERNAL FETAL ALTERATIONS

HAEL NO. 88-0017 ACCESSION NO. 907124 EXPERIMENT NO. 88001716
START DATE: 15-AUG-88 ROUTE: INHALATION DOSE: 250.000PPM REPORT DATE: 06-JUN-89

DAM	FETUS	SEX (M/F/U)	WEIGHT (GRAMS)	STATUS (A/D/E/L)	CROWN-RUMP LENGTH (MM)	EXTERNAL EXAM (N/A)	FIXATIVE (B/A/)
	LOCATION			ABNORMALITY		SEVERITY	
	COMMENT						
435	R 5	M	37.06	A	0.00	N	A
	R 6	F	27.16	A	0.00	N	A
	R 7	F	28.60	A	0.00	N	A
	R 8	F	31.53	A	0.00	N	A
436	L 1	U	0.00	E	0.00	A	
	L 2	M	46.28	A	0.00	N	A
	L 3	F	44.82	A	0.00	N	A
	R 1	M	48.58	A	0.00	N	A
	R 2	F	43.50	A	0.00	N	A
437	L 1	M	51.18	A	0.00	N	A
	L 2	M	46.51	A	0.00	N	A
	L 3	M	44.35	A	0.00	N	A
	L 4	F	38.40	A	0.00	N	A
	R 1	F	46.95	A	0.00	N	A
	R 2	F	48.10	A	0.00	N	A
	R 3	M	50.65	A	0.00	N	A
	R 4	F	49.23	A	0.00	N	A
	R 5	U	0.00	E	0.00	A	
438	L 1	M	35.68	A	0.00	N	A
	L 2	M	37.16	A	0.00	N	A
	L 3	M	34.30	A	0.00	N	A
	R 1	M	39.15	A	0.00	N	A
	R 2	F	41.04	A	0.00	N	A
	R 3	M	29.97	A	0.00	N	A
	R 4	F	33.36	A	0.00	N	A
439	L 1	M	45.26	A	0.00	A	A
	OCCIPITAL			HEMATOMA		P	
	TWO SMALL HEMATOMAS.						
	L 2	F	39.96	A	0.00	N	A
	L 3	F	41.11	A	0.00	N	A
	L 4	F	39.34	A	0.00	N	A
	L 5	M	46.58	A	0.00	N	A
	R 1	F	42.94	A	0.00	N	A
	R 2	M	42.07	A	0.00	N	A
440	L 1	M	34.60	A	0.00	N	A
	L 2	M	34.42	A	0.00	N	A
	L 3	F	34.68	A	0.00	N	A
	R 1	M	44.73	A	0.00	N	A
	R 2	M	45.05	A	0.00	N	A
	R 3	F	34.83	A	0.00	N	A
	R 4	M	24.82	A	0.00	N	A
	R 5	F	29.77	A	0.00	N	A
441	L 1	F	40.60	A	0.00	N	A
	L 2	F	32.92	A	0.00	N	A
	L 3	M	30.75	A	0.00	N	A
	R 1	M	38.92	A	0.00	N	A
	R 2	M	37.62	A	0.00	N	A
	R 3	U	0.00	E	0.00	A	
	R 4	F	34.86	A	0.00	N	A

KEY: N - EXAMINED AND NORMAL, 1 - MINIMAL, 2 - MINOR, 3 - MODERATE, 4 - SEVERE, P - PRESENT, A - ABSENT

INDIVIDUAL LITTER DATA - EXTERNAL FETAL ALTERATIONS

HAEL NO. 88-0017 ACCESSION NO. 907124 EXPERIMENT NO. 88001ZT6
START DATE: 15-AUG-88 ROUTE: INHALATION DOSE: 250.000PPM REPORT DATE: 06-JUN-89

DAM	FETUS	LOCATION	SEX (M/F/U)	WEIGHT (GRAMS)	STATUS (A/D/E/L)	CROWN-RUMP LENGTH (MM)	EXTERNAL EXAM (N/A)	FIXATIVE (B/A/)
			COMMENT		ABNORMALITY		SEVERITY	
441	R 5		M	32.68	A	0.00	N	A
	R 6		F	24.93	A	0.00	N	A
	R 7		F	24.03	A	0.00	N	A
	R 8		M	23.10	A	0.00	N	A
	R 9		M	24.63	A	0.00	N	A
	R 10		F	25.45	A	0.00	N	A
442	L 1		M	47.30	A	0.00	N	A
	L 2		F	37.22	A	0.00	N	A
	L 3		M	38.63	A	0.00	N	A
	L 4		U	0.00	E	0.00	A	
	L 5		F	37.60	A	0.00	N	A
	L 6		M	35.09	A	0.00	N	A
	R 1		M	41.26	A	0.00	N	A
	R 2		M	41.77	A	0.00	N	A
	R 3		F	33.06	A	0.00	N	A

KEY: N - EXAMINED AND NORMAL, 1 - MINIMAL, 2 - MINOR, 3 - MODERATE, 4 - SEVERE, P - PRESENT, A - ABSENT

INDIVIDUAL LITTER DATA - EXTERNAL FETAL ALTERATIONS

HAEL NO. 88-0017 ACCESSION NO. 907124 EXPERIMENT NO. 88001ZI6
START DATE: 15-AUG-88 ROUTE: INHALATION DOSE: 500.000PPM REPORT DATE: 06-JUN-89

DAM	FETUS	LOCATION	SEX (M/F/U)	WEIGHT (GRAMS)	STATUS (A/D/E/L)	CROWN-RUMP LENGTH (MM)	EXTERNAL EXAM (N/A)	FIXATIVE (B/A/)
				ABNORMALITY			SEVERITY	
				COMMENT				
446	L 1		U	0.00	E	0.00	A	
	L 2		M	37.38	A	0.00	N	A
	L 3		F	24.64	A	0.00	N	A
	L 4		M	31.41	A	0.00	N	A
	L 5		M	37.54	A	0.00	N	A
	R 1		M	43.16	A	0.00	N	A
	R 2		F	32.83	A	0.00	N	A
	R 3		M	48.77	A	0.00	N	A
	R 4		M	43.58	A	0.00	N	A
	R 5		U	0.00	E	0.00	A	
	R 6		M	32.06	A	0.00	N	A
	R 7		M	34.59	A	0.00	N	A
448	R 1		F	45.84	A	0.00	N	A
	R 2		M	43.49	A	0.00	N	A
	R 3		M	38.81	A	0.00	N	A
	R 4		F	35.85	A	0.00	N	A
449	L 1		M	41.16	A	0.00	N	A
	L 2		M	41.33	A	0.00	N	A
	L 3		U	0.00	E	0.00	A	
	L 4		F	34.72	A	0.00	N	A
	R 1		F	39.60	A	0.00	A	A
		HEAD			ABNORMAL APPEARANCE		P	
				DOME-SHAPED HEAD, BRUISE APPROX 1/2" IN DIAMETER.				
	R 2		M	38.31	A	0.00	N	A
	R 3		M	35.22	A	0.00	N	A
	R 4		M	38.18	A	0.00	N	A
	R 5		F	31.21	A	0.00	N	A
	R 6		F	37.49	A	0.00	N	A
450	L 1		F	39.02	A	0.00	N	A
	L 2		F	39.24	A	0.00	N	A
	L 3		M	36.94	A	0.00	N	A
	L 4		M	27.16	A	0.00	N	A
	L 5		F	33.40	A	0.00	N	A
	L 6		M	33.63	A	0.00	N	A
	R 1		F	41.11	A	0.00	N	A
	R 2		M	40.42	A	0.00	N	A
	R 3		F	33.86	A	0.00	N	A
	R 4		F	35.81	A	0.00	N	A
	R 5		M	36.32	A	0.00	N	A
451	L 1		F	43.70	A	0.00	N	A
	R 1		M	47.95	A	0.00	N	A
	R 2		M	44.62	A	0.00	N	A
	R 3		F	42.82	A	0.00	N	A
	R 4		F	42.78	A	0.00	N	A
452	L 1		F	33.48	A	0.00	N	A
	L 2		F	41.28	A	0.00	N	A
	L 3		F	40.19	A	0.00	N	A
	L 4		F	40.17	A	0.00	N	A
	L 5		F	41.55	A	0.00	N	A

KEY: N - EXAMINED AND NORMAL, 1 - MINIMAL, 2 - MINOR, 3 - MODERATE, 4 - SEVERE, P - PRESENT, A - ABSENT

INDIVIDUAL LITTER DATA - EXTERNAL FETAL ALTERATIONS

HAEL NO. 88-0017 ACCESSION NO. 907124 EXPERIMENT NO. 88001716
START DATE: 15-AUG-88 ROUTE: INHALATION DOSE: 500.000PPM REPORT DATE: 06-JUN-89

DAM	FETUS	LOCATION	SEX (M/F/U)	WEIGHT (GRAMS)	STATUS (A/D/E/L)	CROWN-RUMP LENGTH (MM)	EXTERNAL EXAM (N/A)	FIXATIVE (B/A/)
				COMMENT	ABNORMALITY		SEVERITY	
452	R 1		U	0.00	E	0.00	A	
	R 2		F	42.74	A	0.00	N	A
	R 3		F	45.07	A	0.00	N	A
	R 4		F	46.29	A	0.00	N	A
453	L 1		F	37.96	A	0.00	N	A
	L 2		F	30.76	A	0.00	N	A
	L 3		M	35.03	A	0.00	N	A
	L 4		M	38.90	A	0.00	N	A
	L 5		F	36.52	A	0.00	N	A
	L 6		M	37.41	A	0.00	N	A
	R 1		F	38.18	A	0.00	N	A
	R 2		F	40.00	A	0.00	N	A
	R 3		M	41.86	A	0.00	N	A
454	R 1		M	42.63	A	0.00	N	A
	R 2		F	36.41	A	0.00	N	A
	R 3		F	34.30	A	0.00	N	A
	R 4		M	43.26	A	0.00	N	A
	R 5		F	35.35	A	0.00	N	A
	R 6		F	28.18	A	0.00	N	A
	R 7		F	27.54	A	0.00	N	A
	R 8		U	0.00	E	0.00	A	
	R 9		F	38.18	A	0.00	N	A
455	L 1		F	37.99	A	0.00	N	A
	L 2		M	24.88	A	0.00	N	A
	L 3		F	25.77	A	0.00	N	A
	L 4		F	18.39	A	0.00	A	A
				455-L4 IS A RUNT.				
	L 5		U	0.00	E	0.00	A	
	L 6		F	16.26	A	0.00	A	A
				455-L6 IS A RUNT.				
	L 7		F	13.93	A	0.00	A	A
				455-L7 IS A RUNT.				
	L 8		F	21.67	A	0.00	N	A
	R 1		F	31.65	A	0.00	N	A
	R 2		F	27.61	A	0.00	N	A
	R 3		M	28.54	A	0.00	N	A
456	L 1		U	0.00	E	0.00	A	
	L 2		F	33.87	A	0.00	N	A
	L 3		U	0.00	E	0.00	A	
	L 4		F	26.94	A	0.00	N	A
	L 5		M	36.07	A	0.00	N	A
	R 1		M	37.46	A	0.00	N	A
	R 2		M	36.47	A	0.00	N	A
	R 3		F	33.41	A	0.00	N	A
	R 4		M	26.45	A	0.00	N	A
	R 5		F	16.89	A	0.00	A	A
				456-R5 IS A RUNT.				
	R 6		F	28.67	A	0.00	N	A
457	L 1		U	0.00	E	0.00	A	

KEY: N - EXAMINED AND NORMAL, 1 - MINIMAL, 2 - MINOR, 3 - MODERATE, 4 - SEVERE, P - PRESENT, A - ABSENT

INDIVIDUAL LITTER DATA - EXTERNAL FETAL ALTERATIONS

HAEL NO. 88-0017 ACCESSION NO. 907124 EXPERIMENT NO. 88001716
START DATE: 15-AUG-88 ROUTE: INHALATION DOSE: 500.000PPM REPORT DATE: 06-JUN-89

DAM	FETUS	SEX (M/F/U)	WEIGHT (GRAMS)	STATUS (A/D/E/L)	CROWN-RUMP LENGTH (MM)	EXTERNAL EXAM (N/A)	FIXATIVE (B/A/)
		LOCATION		ABNORMALITY		SEVERITY	
			COMMENT				
457	L 2	M	42.18	A	0.00	N	A
	L 3	F	46.98	A	0.00	N	A
	R 1	M	47.66	A	0.00	N	A
	R 2	M	48.11	A	0.00	N	A
	R 3	F	46.39	A	0.00	N	A
	R 4	U	0.00	E	0.00	A	
458	L 1	F	31.00	A	0.00	N	A
	L 2	F	27.55	A	0.00	N	A
	L 3	F	26.99	A	0.00	N	A
	L 4	M	28.65	A	0.00	N	A
	R 1	F	32.13	A	0.00	N	A
	R 2	M	33.91	A	0.00	N	A
	R 3	M	33.39	A	0.00	N	A
	R 4	M	31.54	A	0.00	N	A
	R 5	F	32.17	A	0.00	N	A
	R 6	M	29.69	A	0.00	N	A
459	L 1	U	0.00	E	0.00	A	
	L 2	M	41.64	A	0.00	A	A
		LEFT EYE		MICROPHTHALMIA		P	
	L 3	U	0.00	L	0.00	A	
	L 4	M	39.29	A	0.00	N	A
	L 5	F	46.05	A	0.00	N	A
	R 1	U	0.00	E	0.00	A	
	R 2	U	0.00	E	0.00	A	
	R 3	U	0.00	E	0.00	A	
	R 4	U	0.00	E	0.00	A	
	R 5	M	37.47	A	0.00	A	A
		LEFT FORELIMB		ARTHROGRYPOSIS		P	
			LEFT FOREPAW, ARTHROGRYPOSIS.				
460	L 1	M	49.32	A	0.00	N	A
	L 2	F	37.47	A	0.00	N	A
	R 1	U	0.00	E	0.00	A	
	R 2	F	30.49	A	0.00	N	A
	R 3	F	42.82	A	0.00	N	A
	R 4	M	41.36	A	0.00	N	A

KEY: N - EXAMINED AND NORMAL, 1 - MINIMAL, 2 - MINOR, 3 - MODERATE, 4 - SEVERE, P - PRESENT, A - ABSENT

INDIVIDUAL LITTER DATA - EXTERNAL, INTERNAL SOFT TISSUE AND SKELETAL ALTERATIONS

HAEL NO. 88-0017 ACCESSION NO. 907124 EXPERIMENT NO. 880017T6

START DATE: 15-AUG-88 ROUTE: INHALATION DOSE: CONTROL REPORT DATE: 08-JUN-89

DAM'S EAR TAG NO.	G221	G221	G220	G211	G218	G223	G224	G221	G222	G224	G222	G223	G219	G223	G223	TOTAL	
DAM'S STUDY NO.	401	402	403	404	405	406	407	408	409	410	411	412	413	414	415	FETUSES	LITTERS
NO. FETUSES EXAMINED:																	
EXTERNAL	8	7	9	9	10	10	8	10	10	7	10	2	11	7	8	126	15
SOFT TISSUE	8	7	9	9	10	10	8	10	10	7	10	2	11	7	8	126	15
SKELETAL	8	7	9	9	10	10	8	10	10	7	10	2	11	7	8	126	15
EXTERNAL ALTERATIONS:			1								1					2	2
PROTRUSION																	
EYES			1													1	1
LEFT EYE																	
ABNORMAL APPEARANCE																	
HEAD			1													1	1
HEMATOMA																	
RIGHT HINDLIMB											1					1	1
LEFT HINDLIMB																	
OCCIPITAL																	
MALPOSTION, NOS																	
RIGHT FORELIMB																	
MICROPHTHALMIA																	
LEFT EYE																	
ARTHROGRYPOSIS																	
LEFT FORELIMB																	
SOFT TISSUE ALTERATIONS:	2	2	7	4	10	8	3	5	7	4	9	2	6	7	4	80	15
THORACIC CAVITY																	
HEMORRHAGE																	
THYMUS	1	2	4	4	10	8	3	4	6	4	8	2	4	7	4	71	15
SEAL HEART																	
HEART	1		1											3	1	6	4
SMALL																	
THYMUS																	
LUNGS																	
FLABBY																	
HEART																	
MISSHAPEN																	
HEART																	

INDIVIDUAL LITTER DATA - EXTERNAL, INTERNAL SOFT TISSUE AND SKELETAL ALTERATIONS

HAEL NO. 88-0017 ACCESSION NO. 907124 EXPERIMENT NO. 880017T6

START DATE: 15-AUG-88 ROUTE: INHALATION DOSE: CONTROL REPORT DATE: 08-JUN-89

DAM'S EAR TAG NO.	G210	G213	G205	G193	G182	G232	G240	G212	G224	G241	G226	G231	G194	G223	G238	TOTAL	
DAM'S STUDY NO.	401	402	403	404	405	406	407	408	409	410	411	412	413	414	415	FETUSES	LITTERS
ATELECTASIS																	
LUNGS																	
KIDNEYS																	
DILATATION																	
RENAL PELVES			4			1			2		2		1			10	5
RENAL PELVIS															2	2	1
RIGHT RENAL PELVIS																	
LEFT RENAL PELVIS																	
SMALL																	
LEFT KIDNEY																	
MALPOSTION, NOS																	
LEFT KIDNEY																	
ABDOMINAL CAVITY																	
SMALL																	
SPLEEN			1	1	1	1		2	1		2		1			10	8
KIDNEYS									1							1	1
GALLBLADDER																	
ASCITES																	
ABDOMEN																	
ENLARGED AND DARK																	
LIVER																	
PALLOR																	
SPLEEN																	
HEART																	
DEFORMITY, NOS																	
SEPTUM											1					1	1
ABSENT OR MISSING																	
SEPTUM																	
INOMINATE																	
LUNGS																	
ABSENT OR MISSING																	
POSTCAVAL LUNG LOBE													1			1	1
BRAIN																	
HYDROCEPHALUS																	
VENTRICLE																	

INDIVIDUAL LITTER DATA - EXTERNAL, INTERNAL SOFT TISSUE AND SKELETAL ALTERATIONS

HAEL NO. 88-0017 ACCESSION NO. 907124 EXPERIMENT NO. 880017T6

START DATE: 15-AUG-88 ROUTE: INHALATION DOSE: CONTROL REPORT DATE: 08-JUN-89

DAM'S EAR TAG NO.	G 2 1 0	G 2 1 3	G 2 0 5	G 1 9 3	G 1 8 2	G 2 3 2	G 2 4 0	G 2 1 2	G 2 2 4	G 2 4 1	G 2 2 6	G 2 3 1	G 1 9 4	G 2 2 3	G 2 3 8	TOTAL	
DAM'S STUDY NO.	401	402	403	404	405	406	407	408	409	410	411	412	413	414	415	FETUSES	LITTERS
SKELETAL ALTERATIONS:	8	7	9	9	7	10	7	10	10	7	10	1	10	7	7	119	15
BONES SKULL																	
OSSIFICATION, PARTIAL																	
ZYGOMATIC AND PALATINE BONE																	
FRONTAL											3					3	1
PARIETAL											1					1	1
HYOID		1	1	6		5	3	3		3	9	1	3		1	36	11
DEFORMITY, NOS																	
HYOID									1							1	1
MISSHAPEN																	
HYOID																	
ABSENT OR MISSING																	
HYOID																	
OSSIFICATION, ABSENT																	
HYOID																	
CERVICAL ARCHES																	
MISALIGNED																	
CERVICAL ARCH 1																	
CERVICAL ARCH 2																	
CERVICAL ARCH 3																	
CERVICAL ARCH 4																	
CERVICAL ARCH 5																	
CERVICAL ARCH 6																	
CERVICAL ARCH 7																	
MISSHAPEN																	
CERVICAL ARCH 6																	
CERVICAL CENTRA																	
OSSIFICATION, PARTIAL																	
CERVICAL CENTRUM 1			3	1	2	10	2	5	6	5	7		4	1	1	47	12
CERVICAL CENTRUM 2																	
CERVICAL CENTRUM 3																	
CERVICAL CENTRUM 4																	
CERVICAL CENTRUM 5																	
CERVICAL CENTRUM 6																	
OSSIFICATION, ABSENT																	
CERVICAL CENTRUM 1											1					1	1

INDIVIDUAL LITTER DATA - EXTERNAL, INTERNAL SOFT TISSUE AND SKELETAL ALTERATIONS

HAEL NO. 88-0017 ACCESSION NO. 907124 EXPERIMENT NO. 880017T6

START DATE: 15-AUG-88 ROUTE: INHALATION DOSE: CONTROL REPORT DATE: 08-JUN-89

DAM'S EAR TAG NO.	G 2 1 0	G 2 1 3	G 2 0 5	G 1 9 3	G 1 8 2	G 2 3 2	G 2 4 0	G 2 1 2	G 2 2 4	G 2 4 1	G 2 2 6	G 2 3 1	G 1 9 4	G 2 2 3	G 2 3 8	TOTAL
DAM'S STUDY NO.	401	402	403	404	405	406	407	408	409	410	411	412	413	414	415	FETUSES LITTERS
BILOBED																
CERVICAL CENTRUM 1																
CERVICAL CENTRUM 3																
MISALIGNED																
CERVICAL CENTRUM 1																
CERVICAL CENTRUM 2																
CERVICAL CENTRUM 3																
CERVICAL CENTRUM 4																
CERVICAL CENTRUM 5																
CERVICAL CENTRUM 6																
CERVICAL CENTRUM 7																
FUSED																
CERVICAL CENTRUM 5																
CERVICAL CENTRUM 6																
SMALL																
CERVICAL CENTRUM 6																
MALPOSTION, NOS																
CERVICAL CENTRUM 6																
CERVICAL CENTRUM 7																
THORACIC ARCHES																
MISALIGNED																
THORACIC ARCH 7																
THORACIC ARCH 8																
ABSENT OR MISSING																
THORACIC ARCH 8																
THORACIC CENTRA																
MISSHAPEN																
THORACIC CENTRUM 1																
THORACIC CENTRUM 4																
THORACIC CENTRUM 10																
THORACIC CENTRUM 12																
SPLIT																
THORACIC CENTRUM 4																
THORACIC CENTRUM 8																
BILOBED																
THORACIC CENTRUM 5																

INDIVIDUAL LITTER DATA - EXTERNAL, INTERNAL SOFT TISSUE AND SKELETAL ALTERATIONS

HAEL NO. 88-0017 ACCESSION NO. 907124 EXPERIMENT NO. 88017T6

START DATE: 15-AUG-88 ROUTE: INHALATION DOSE: CONTROL REPORT DATE: 08-JUN-89

DAM'S EAR TAG NO.	G 2 1 0	G 2 1 3	G 2 0 5	G 1 9 3	G 1 8 2	G 2 3 2	G 2 4 0	G 2 1 2	G 2 2 4	G 2 4 1	G 2 2 6	G 2 3 1	G 1 9 4	G 2 2 3	G 2 3 8	TOTAL	
DAM'S STUDY NO.	401	402	403	404	405	406	407	408	409	410	411	412	413	414	415	FETUSES	LITTERS
THORACIC CENTRUM 6																	
THORACIC CENTRUM 7																	
THORACIC CENTRUM 8																	
OSSIFICATION, PARTIAL																	
THORACIC CENTRUM 6																	
THORACIC CENTRUM 11																	
OSSIFICATION, ABSENT																	
THORACIC CENTRUM 8																	
TAIL																	
15-17 VERT.																	
CAUDAL VERTEBRAE	7	7	9	9	10	10	8	10	10	7	10	2	11	7	8	125	15
MORE THAN 17 VERT.																	
CAUDAL VERTEBRAE	1															1	1
LESS THAN 15 VERT.																	
CAUDAL VERTEBRAE																	
OSSIFICATION, ABSENT																	
CAUDAL VERTEBRAE																	
OSSIFICATION, PARTIAL																	
CAUDAL VERTEBRAE																	
STERNUM																	
BILOBED																	
STERNUM 2																	
OSSIFICATION, PARTIAL																	
STERNUM 2																	
STERNUM 5	2	1	3	7		7	5	4	7	1	7	1	4		1	50	13
STERNUM 6	2		5	1	1	1	2	4	1	2	2	1	3	1	3	29	14
MISSHAPEN																	
STERNUM 2																	
FUSED																	
STERNUM 3																	
STERNUM 4																	
STERNUM 5																	
DEFORMITY, NOS																	
STERNUM 4																	
OSSIFICATION, ABSENT																	
STERNUM 5	1		3	1	2						3	1		1		12	7

INDIVIDUAL LITTER DATA - EXTERNAL, INTERNAL SOFT TISSUE AND SKELETAL ALTERATIONS

HAEL NO. 88-0017 ACCESSION NO. 907124 EXPERIMENT NO. 880017T6

START DATE: 15-AUG-88 ROUTE: INHALATION DOSE: CONTROL REPORT DATE: 08-JUN-89

DAM'S EAR TAG NO.	G212104	G211032	G205852	G121932	G118242	G212232	G220402	G212412	G224162	G224241	G223261	G211942	G221432	G223238	TOTAL	
DAM'S STUDY NO.	401	402	403	404	405	406	407	408	409	410	411	412	413	414	415	FETUSES	LITTERS
STERNUM 6													1		2	3	2
RIB																	
FUSED																	
RIB 6																	
RIB 7																	
RIB 8																	
RIB 9																	
RIB 10																	
KNOBBY RIB,UNILATERAL																	
RIB 7				1												1	1
RIB 8				1												1	1
RIB 9				1												1	1
MISALIGNED																	
RIB 8																	
MISSHAPEN																	
RIB 11																	
EXTRA RIB, BILATERAL																	
RIB 13	3	3	8	4	4	9		7	5	4	3		5	3	6	64	13
RUDIMENTARY RIB, UNILATERAL																	
RIB 13	2			2	2		3	2	2	1	2		1	2		19	10
EXTRA RIB, UNILATERAL																	
RIB 13	1	2		1	1	1	1	2	1		2		1	1		14	11
RUDIMENTARY RIB, BILATERAL																	
RIB 13		1					3		1		1		1			7	5
PELVIS																	
OSSIFICATION, PARTIAL																	
PUBIS			1													1	1
OSSIFICATION, ABSENT																	
PUBIS																	
VERTEBRA																	
ABSENT OR MISSING																	
LUMBAR VERTEBRA, NOS	6	5	1						1							13	4
BONES OF LEFT FOREPAW																	
OSSIFICATION, ABSENT																	
PHALANGES 5				3		1			1				7	2		14	5
METACARPAL 1											2					2	1

INDIVIDUAL LITTER DATA - EXTERNAL, INTERNAL SOFT TISSUE AND SKELETAL ALTERATIONS

HAEL NO. 88-0017 ACCESSION NO. 907124 EXPERIMENT NO. 88017T6

START DATE: 15-AUG-88 ROUTE: INHALATION DOSE: CONTROL REPORT DATE: 08-JUN-89

DAM'S EAR TAG NO.	G 2 1 0	G 2 1 3	G 2 0 5	G 1 9 3	G 1 8 2	G 2 3 2	G 2 4 0	G 2 1 2	G 2 2 4	G 2 4 1	G 2 2 6	G 2 3 1	G 1 9 4	G 2 2 3	G 2 3 8	TOTAL	
DAM'S STUDY NO.	401	402	403	404	405	406	407	408	409	410	411	412	413	414	415	FETUSES	LITTERS
PHALANGES 1																	
PHALANGES 4																	
BONES OF RIGHT FOREPAW																	
OSSIFICATION, PARTIAL																	
PHALANGES 5				2		3			1		2		1	1	1	11	7
METACARPAL 1											1					1	1
PHALANGES 2													1			1	1
PHALANGES 4													1			1	1
PHALANGES 3													1			1	1
PHALANGES 1																	
OSSIFICATION, ABSENT																	
PHALANGES 5				2		1							7	2		12	4
METACARPAL 1											2					2	1
PHALANGES 4																	
PHALANGES 1																	
BONES OF LEFT FOREPAW																	
OSSIFICATION, PARTIAL																	
PHALANGES 5				1		3					2		1	1	2	10	6
PHALANGES 4													1			1	1
PHALANGES 3													1			1	1
PHALANGES 2													1			1	1
METACARPAL 1																	
PHALANGES 1																	
VERTEBRA																	
ACCESSORY STRUCTURE																	
LUMBAR VERTEBRA, NOS																	
BONES OF RIGHT HINDPAW																	
OSSIFICATION, PARTIAL																	
PHALANGES 5																	
PHALANGES 4																	
PHALANGES 2																	
PHALANGES 3																	
HINDPAW																	
OSSIFICATION, ABSENT																	
CALCANEOUS																	
BONES OF LEFT HINDPAW																	
OSSIFICATION, PARTIAL																	
PHALANGES 5																	

INDIVIDUAL LITTER DATA - EXTERNAL, INTERNAL SOFT TISSUE AND SKELETAL ALTERATIONS

HAEL NO. 88-0017 ACCESSION NO. 907124 EXPERIMENT NO. 88017T6

START DATE: 15-AUG-88 ROUTE: INHALATION DOSE: CONTROL REPORT DATE: 08-JUN-89

AM'S EAR TAG NO.	G 2 1 0	G 2 1 3	G 2 0 5	G 1 9 3	G 1 8 2	G 2 3 2	G 2 4 0	G 2 1 2	G 2 2 4	G 2 4 1	G 2 2 6	G 2 3 1	G 1 9 4	G 2 2 3	G 2 3 8	TOTAL
AM'S STUDY NO.	401	402	403	404	405	406	407	408	409	410	411	412	413	414	415	FETUSES LITTERS
PHALANGES 3																
PHALANGES 1																
PHALANGES 2																
PHALANGES 4																
BONES OF RIGHT HINDPAW																
OSSIFICATION, ABSENT																
PHALANGES 5																
BONES OF LEFT HINDPAW																
OSSIFICATION, ABSENT																
PHALANGES 5																
BONES SKULL																
SPLIT																
ODONTOID																
CERVICAL ARCHES																
SPLIT																
ATLAS																
HINDPAW																
OSSIFICATION, PARTIAL																
CALCANEOUS																
BONES SKULL																
ENLARGED,NOS																
FONTANEL																

INDIVIDUAL LITTER DATA - EXTERNAL, INTERNAL SOFT TISSUE AND SKELETAL ALTERATIONS

HAEL NO. 88-0017 ACCESSION NO. 907124 EXPERIMENT NO. 880017T6

START DATE: 15-AUG-88 ROUTE: INHALATION DOSE: 125.000PPM REPORT DATE: 13-JUN-89

DAM'S EAR TAG NO.	G 1 9 9	G 2 1 5	G 2 0 4	G 1 8 8	G 1 8 6	G 1 9 6	G 2 0 6	G 1 9 5	G 2 1 7	G 2 0 1	G 2 2 1 9	G 2 1 6	G 1 9 0	G 1 8 5	G 2 2 2	TOTAL	
DAM'S STUDY NO.	416	417	418	419	420	421	422	423	424	425	426	427	428	429	430	FETUSES	LITTERS
NO. FETUSES EXAMINED:																	
EXTERNAL	4	9	8	7	11	10	10	6	PD	5	1	9	8	10	10	108	14
SOFT TISSUE	4	9	8	7	11	10	10	6	-	5	1	9	8	10	10	108	14
SKELETAL	4	9	8	7	11	10	10	6	-	5	1	9	8	10	10	108	14
EXTERNAL ALTERATIONS:					1											1	1
PROTRUSION																	
EYES																	
LEFT EYE					1											1	1
ABNORMAL APPEARANCE																	
HEAD																	
HEMATOMA																	
RIGHT HINDLIMB																	
LEFT HINDLIMB																	
OCCIPITAL																	
MALPOSTION, NOS																	
RIGHT FORELIMB																	
MICROPHTHALMIA																	
LEFT EYE																	
ARTHROGRYPOSIS																	
LEFT FORELIMB																	
SOFT TISSUE ALTERATIONS:	2	4	5	4	8	9	2	3		3		3	3	7	8	61	13
THORACIC CAVITY																	
HEMORRHAGE																	
THYMUS	1	2	4	4	6	6	2	3		3		2	3	5	8	49	13
SEAL HEART																	
HEART	1	2			1		1							1	1	7	6
FLABBY																	
HEART						1				1		1				3	3
SMALL																	
LUNGS						1										1	1
THYMUS						1										1	1
MISSHAPEN																	
HEART																	

INDIVIDUAL LITTER DATA - EXTERNAL, INTERNAL SOFT TISSUE AND SKELETAL ALTERATIONS

HAEL NO. 88-0017 ACCESSION NO. 907124 EXPERIMENT NO. 88017T6

START DATE: 15-AUG-88 ROUTE: INHALATION DOSE: 125.000PPM REPORT DATE: 13-JUN-89

DAM'S EAR TAG NO.	G 1 9 9	G 2 1 5	G 2 0 4	G 1 8 8	G 1 8 6	G 1 9 6	G 2 0 6	G 1 9 5	G 2 1 7	G 2 0 1	G 2 2 9	G 2 1 6	G 1 9 0	G 1 8 5	G 2 2 2	TOTAL	
DAM'S STUDY NO.	416	417	418	419	420	421	422	423	424	425	426	427	428	429	430	FETUSES	LITTERS
ATELECTASIS																	
LUNGS																	
ABDOMINAL CAVITY																	
SMALL																	
SPLEEN						3								1	1	5	3
KIDNEYS																	
GALLBLADDER						1										1	1
ASCITES																	
ABDOMEN						1										1	1
ENLARGED AND DARK																	
LIVER						1										1	1
PALLOR																	
SPLEEN																	
KIDNEYS																	
DILATATION																	
RENAL PELVES			1		1										1	3	3
RENAL PELVIS																	
RIGHT RENAL PELVIS				1												1	1
LEFT RENAL PELVIS					1											1	1
MALPOSTION, NOS																	
LEFT KIDNEY						1										1	1
SMALL																	
LEFT KIDNEY						1										1	1
HEART																	
DEFORMITY, NOS																	
SEPTUM																	
ABSENT OR MISSING																	
SEPTUM						1										1	1
INOMINATE																	
LUNGS																	
ABSENT OR MISSING																	
POSTCAVAL LUNG LOBE						2									1	3	2
BRAIN																	
HYDROCEPHALUS																	
VENTRICLE					1											1	1

INDIVIDUAL LITTER DATA - EXTERNAL, INTERNAL SOFT TISSUE AND SKELETAL ALTERATIONS

HAEL NO. 88-0017 ACCESSION NO. 907124 EXPERIMENT NO. 880017T6

START DATE: 15-AUG-88 ROUTE: INHALATION DOSE: 125.000PPM REPORT DATE: 13-JUN-89

DAM'S EAR TAG NO.	G199	G215	G204	G188	G186	G196	G206	G195	G217	G201	G229	G216	G190	G185	G222	TOTAL	
DAM'S STUDY NO.	416	417	418	419	420	421	422	423	424	425	426	427	428	429	430	FETUSES	LITTERS
SKELETAL ALTERATIONS:	4	9	7	6	11	10	10	6		5	1	8	8	10	10	105	14
BONES SKULL																	
OSSIFICATION, PARTIAL																	
ZYGOMATIC AND PALATINE BONE																	
FRONTAL																	
PARIETAL																	
HYOID				2	2		1					3		5	9	22	6
DEFORMITY, NOS																	
HYOID																	
MISSHAPEN																	
HYOID				1												1	1
ABSENT OR MISSING																	
HYOID																	
OSSIFICATION, ABSENT																	
HYOID																	
CERVICAL ARCHES																	
MISALIGNED																	
CERVICAL ARCH 1																	
CERVICAL ARCH 2																	
CERVICAL ARCH 3																	
CERVICAL ARCH 4																	
CERVICAL ARCH 5																	
CERVICAL ARCH 6																	
CERVICAL ARCH 7																	
MISSHAPEN																	
CERVICAL ARCH 6																	
CERVICAL CENTRA																	
OSSIFICATION, PARTIAL																	
CERVICAL CENTRUM 1				1		3	1						1	3		9	5
CERVICAL CENTRUM 2																	
CERVICAL CENTRUM 3																	
CERVICAL CENTRUM 4																	
CERVICAL CENTRUM 5																	
CERVICAL CENTRUM 6																	
OSSIFICATION, ABSENT																	
CERVICAL CENTRUM 1																	

INDIVIDUAL LITTER DATA - EXTERNAL, INTERNAL SOFT TISSUE AND SKELETAL ALTERATIONS

HAEL NO. 88-0017 ACCESSION NO. 907124 EXPERIMENT NO. 88017T6

START DATE: 15-AUG-88 ROUTE: INHALATION DOSE: 125.000PPM REPORT DATE: 13-JUN-89

DAM'S EAR TAG NO.	G 1 9 9	G 2 1 5	G 2 0 4	G 1 8 8	G 1 8 6	G 1 9 6	G 2 0 6	G 1 9 5	G 2 1 7	G 2 2 1	G 2 2 9	G 2 1 6	G 1 9 0	G 1 8 5	G 2 2 2	TOTAL	
DAM'S STUDY NO.	416	417	418	419	420	421	422	423	424	425	426	427	428	429	430	FETUSES	LITTERS
BILOBED																	
CERVICAL CENTRUM 1																	
CERVICAL CENTRUM 3						1										1	1
MISALIGNED																	
CERVICAL CENTRUM 1																	
CERVICAL CENTRUM 2																	
CERVICAL CENTRUM 3																	
CERVICAL CENTRUM 4																	
CERVICAL CENTRUM 5																	
CERVICAL CENTRUM 6																	
CERVICAL CENTRUM 7																	
FUSED																	
CERVICAL CENTRUM 5																	
CERVICAL CENTRUM 6																	
MALPOSTION, NOS																	
CERVICAL CENTRUM 6																	
CERVICAL CENTRUM 7																	
SMALL																	
CERVICAL CENTRUM 6																	
THORACIC ARCHES																	
MISALIGNED																	
THORACIC ARCH 7																	
THORACIC ARCH 8																	
ABSENT OR MISSING																	
THORACIC ARCH 8						1										1	1
THORACIC CENTRA																	
MISSHAPEN																	
THORACIC CENTRUM 1																	
THORACIC CENTRUM 4																	
THORACIC CENTRUM 10																	
THORACIC CENTRUM 12																	
SPLIT																	
THORACIC CENTRUM 4						1										1	1
THORACIC CENTRUM 8						1										1	1
BILOBED																	
THORACIC CENTRUM 5																	

INDIVIDUAL LITTER DATA - EXTERNAL, INTERNAL SOFT TISSUE AND SKELETAL ALTERATIONS

HAEL NO. 88-0017 ACCESSION NO. 907124 EXPERIMENT NO. 880017T6

START DATE: 15-AUG-88 ROUTE: INHALATION DOSE: 125.000PPM REPORT DATE: 13-JUN-89

DAM'S EAR TAG NO.	G 1 9 9	G 2 1 5	G 2 0 4	G 1 8 8	G 1 8 6	G 1 9 6	G 2 0 6	G 1 9 5	G 2 1 7	G 2 0 1	G 2 2 1 9	G 2 1 6	G 1 9 0	G 1 8 5	G 2 2 2	TOTAL	
DAM'S STUDY NO.	416	417	418	419	420	421	422	423	424	425	426	427	428	429	430	FETUSES	LITTERS
THORACIC CENTRUM 6					1											1	1
THORACIC CENTRUM 7						1										1	1
THORACIC CENTRUM 8																	
OSSIFICATION, PARTIAL																	
THORACIC CENTRUM 6																	
THORACIC CENTRUM 11																	
OSSIFICATION, ABSENT																	
THORACIC CENTRUM 8																	
TAIL																	
15-17 VERT.																	
CAUDAL VERTEBRAE	4	9	8	7	11	10	10	6		5	1	9	8	10	8	106	14
MORE THAN 17 VERT.																	
CAUDAL VERTEBRAE															2	2	1
LESS THAN 15 VERT.																	
CAUDAL VERTEBRAE																	
STERNUM																	
BILOBED																	
STERNUM 2						1										1	1
OSSIFICATION, PARTIAL																	
STERNUM 2														3		3	1
STERNUM 5			2	6	10		3	2		2		6	4	5		40	9
STERNUM 6	3		2							2		4	2		1	14	6
MISSHAPEN																	
STERNUM 2																	
FUSED																	
STERNUM 3						1										1	1
STERNUM 4						1										1	1
STERNUM 5																	
DEFORMITY, NOS																	
STERNUM 4					1											1	1
OSSIFICATION, ABSENT																	
STERNUM 5	1		1	1	1	1		1				1	1	2		10	9
STERNUM 6												1				1	1
RIB																	
FUSED																	
RIB 6																	

INDIVIDUAL LITTER DATA - EXTERNAL, INTERNAL SOFT TISSUE AND SKELETAL ALTERATIONS

HAEL NO. 88-0017 ACCESSION NO. 907124 EXPERIMENT NO. 880017T6

START DATE: 15-AUG-88 ROUTE: INHALATION DOSE: 125.000PPM REPORT DATE: 13-JUN-89

M'S EAR TAG NO.	G 1 9 9	G 2 1 5	G 2 0 4	G 1 8 8	G 1 8 6	G 1 9 6	G 2 0 6	G 1 9 5	G 2 1 7	G 2 2 1	G 2 2 9	G 2 1 6	G 1 9 0	G 1 1 5	G 2 8 2	TOTAL	
M'S STUDY NO.	416	417	418	419	420	421	422	423	424	425	426	427	428	429	430	FETUSES	LITTERS
RIB 7						1										1	1
RIB 8						1										1	1
RIB 9														1		1	1
RIB 10														1		1	1
KNOBBY RIB,UNILATERAL																	
RIB 7																	
RIB 8																	
RIB 9																	
MISALIGNED																	
RIB 8																	
MISSHAPEN																	
RIB 11														1		1	1
EXTRA RIB, BILATERAL																	
RIB 13	2	7	5	1	8	9	4	4		4		5	5	4	10	68	13
EXTRA RIB, UNILATERAL																	
RIB 13	1	2		1	1	1	3	1						1		11	8
RUDIMENTARY RIB, UNILATERAL																	
RIB 13	1	1		1		1	4	1			1		1	4		15	9
RUDIMENTARY RIB, BILATERAL																	
RIB 13	1			3	2		2			1		1	3	1		14	8
PELVIS																	
OSSIFICATION, PARTIAL																	
PUBIS																	
OSSIFICATION, ABSENT																	
PUBIS																	
VERTEBRA																	
ABSENT OR MISSING																	
LUMBAR VERTEBRA, NOS		1	3					2								6	3
BONES OF RIGHT FOREPAW																	
OSSIFICATION, PARTIAL																	
PHALANGES 5	2	1												1	4	8	4
METACARPAL 1														3	1	4	2
PHALANGES 2																	
PHALANGES 4																	
PHALANGES 3																	
PHALANGES 1																	

INDIVIDUAL LITTER DATA - EXTERNAL, INTERNAL SOFT TISSUE AND SKELETAL ALTERATIONS

HAEL NO. 88-0017 ACCESSION NO. 907124 EXPERIMENT NO. 880017T6

START DATE: 15-AUG-88 ROUTE: INHALATION DOSE: 125.000PPM REPORT DATE: 13-JUN-89

DAM'S EAR TAG NO.	G 1 9 9	G 2 1 5	G 2 0 4	G 1 8 8	G 1 8 6	G 1 9 6	G 2 0 6	G 1 9 5	G 2 1 7	G 2 2 1	G 2 2 0	G 2 2 1	G 1 9 0	G 1 8 5	G 2 2 2	TOTAL	
DAM'S STUDY NO.	416	417	418	419	420	421	422	423	424	425	426	427	428	429	430	FETUSES	LITTERS
BONES OF LEFT FOREPAW OSSIFICATION, ABSENT																	
PHALANGES 5				1								1		2	1	5	4
METACARPAL 1																	
PHALANGES 4																	
PHALANGES 1																	
BONES OF RIGHT FOREPAW OSSIFICATION, ABSENT																	
PHALANGES 5				1								1		2	1	5	4
METACARPAL 1																	
PHALANGES 1																	
PHALANGES 4																	
BONES OF LEFT FOREPAW OSSIFICATION, PARTIAL																	
PHALANGES 5	2	1												1	4	8	4
PHALANGES 3																	
PHALANGES 4																	
PHALANGES 2																	
METACARPAL 1														3	1	4	2
PHALANGES 1																	
VERTEBRA ACCESSORY STRUCTURE																	
LUMBAR VERTEBRA, NOS						1									1	2	2
BONES OF LEFT HINDPAW OSSIFICATION, PARTIAL																	
PHALANGES 5																	
PHALANGES 1																	
PHALANGES 3																	
PHALANGES 2																	
PHALANGES 4																	
BONES OF RIGHT HINDPAW OSSIFICATION, PARTIAL																	
PHALANGES 5																	
PHALANGES 2																	
PHALANGES 3																	
PHALANGES 4																	

INDIVIDUAL LITTER DATA - EXTERNAL, INTERNAL SOFT TISSUE AND SKELETAL ALTERATIONS

HAEL NO. 88-0017 ACCESSION NO. 907124 EXPERIMENT NO. 880017T6

START DATE: 15-AUG-88 ROUTE: INHALATION DOSE: 125.000PPM REPORT DATE: 13-JUN-89

DAM'S EAR TAG NO.	G 1 9 9	G 2 1 5	G 2 0 4	G 1 8 8	G 1 8 6	G 1 9 6	G 2 0 6	G 1 9 5	G 2 7 7	G 2 1 1	G 2 2 9	G 2 1 6	G 1 9 0	G 1 8 5	G 2 2 2	TOTAL
DAM'S STUDY NO.	416	417	418	419	420	421	422	423	424	425	426	427	428	429	430	FETUSES LITTERS
HINDPAW																
OSSIFICATION, ABSENT																
CALCANEOUS																
BONES OF RIGHT HINDPAW																
OSSIFICATION, ABSENT																
PHALANGES 5																
BONES OF LEFT HINDPAW																
OSSIFICATION, ABSENT																
PHALANGES 5																
CERVICAL ARCHES																
SPLIT																
ATLAS																
BONES SKULL																
SPLIT																
ODONTOID																
HINDPAW																
OSSIFICATION, PARTIAL																
CALCANEOUS																
BONES SKULL																
ENLARGED,NOS																
FONTANEL																

INDIVIDUAL LITTER DATA - EXTERNAL, INTERNAL SOFT TISSUE AND SKELETAL ALTERATIONS

HAEL NO. 88-0017 ACCESSION NO. 907124 EXPERIMENT NO. 880017T6

START DATE: 15-AUG-88 ROUTE: INHALATION DOSE: 250.000PPM REPORT DATE: 13-JUN-89

DAM'S EAR TAG NO.	G 2 0 9	G 2 0 2	G 1 8 4	G 1 8 0	G 2 0 0	G 1 8 3	G 2 0 8	G 2 4 3	G 2 2 1	G 2 2 5	G 1 8 7	G 2 3 4	G 1 8 1	G 2 3 7	G 2 0 3	TOTAL	
DAM'S STUDY NO.	431	432	433	434	435	436	437	438	439	440	441	442	443	444	445	FETUSES	LITTERS
NO. FETUSES EXAMINED:																	
EXTERNAL	7	6	11	9	10	4	8	7	7	8	12	8	NN	NN	NN	97	12
SOFT TISSUE	7	6	11	9	10	4	8	7	7	8	12	8	-	-	-	97	12
SKELETAL	7	6	11	9	10	4	8	7	7	8	12	8	-	-	-	97	12
EXTERNAL ALTERATIONS:	2								1							3	2
PROTRUSION																	
EYES	1															1	1
LEFT EYE																	
ABNORMAL APPEARANCE																	
HEAD	1															1	1
HEMATOMA																	
RIGHT HINDLIMB																	
LEFT HINDLIMB	1															1	1
OCCIPITAL									1							1	1
MALPOSTION, NOS																	
RIGHT FORELIMB	1															1	1
MICROPHTHALMIA																	
LEFT EYE																	
ARTHROGRYPOSIS																	
LEFT FORELIMB																	
SOFT TISSUE ALTERATIONS:	7	5	5	4	4	2	5	6	4	2	11	5				60	12
THORACIC CAVITY																	
HEMORRHAGE																	
THYMUS	6	3	4	3	2	2	4	5	3	2	7	4				45	12
SEAL HEART																	
HEART	1	3	1	2		1			1		1					10	7
FLABBY																	
HEART																	
SMALL																	
LUNGS																	
THYMUS											1					1	1
MISSHAPEN																	
HEART	2															2	1

INDIVIDUAL LITTER DATA - EXTERNAL, INTERNAL SOFT TISSUE AND SKELETAL ALTERATIONS

HAEL NO. 88-0017 ACCESSION NO. 907124 EXPERIMENT NO. 88017T6

START DATE: 15-AUG-88 ROUTE: INHALATION DOSE: 250.000PPM REPORT DATE: 13-JUN-89

DAM'S EAR TAG NO.	G 2 0 9	G 2 0 2	G 1 8 4	G 1 8 0	G 2 0 0	G 1 8 3	G 2 0 8	G 2 4 3	G 2 2 1	G 2 2 5	G 1 8 7	G 2 3 4	G 1 8 1	G 2 3 7	G 2 0 3	TOTAL	
DAM'S STUDY NO.	431	432	433	434	435	436	437	438	439	440	441	442	443	444	445	FETUSES	LITTERS
ATELECTASIS																	
LUNGS																	
ABDOMINAL CAVITY																	
SMALL																	
SPLEEN	3										2					5	2
KIDNEYS																	
GALLBLADDER																	
ASCITES																	
ABDOMEN	1															1	1
ENLARGED AND DARK																	
LIVER																	
PALLOR																	
SPLEEN	1															1	1
KIDNEYS																	
DILATATION																	
RENAL PELVES	2		1		2							1				6	4
RENAL PELVIS																	
RIGHT RENAL PELVIS		1					1	1			1					4	4
LEFT RENAL PELVIS					1							1				2	2
MALPOSTION, NOS																	
LEFT KIDNEY																	
SMALL																	
LEFT KIDNEY																	
HEART																	
DEFORMITY, NOS																	
SEPTUM																	
ABSENT OR MISSING																	
SEPTUM																	
INOMINATE								1								1	1
LUNGS																	
ABSENT OR MISSING																	
POSTCAVAL LUNG LOBE	1	1						1								3	3
BRAIN																	
HYDROCEPHALUS																	
VENTRICLE																	

INDIVIDUAL LITTER DATA - EXTERNAL, INTERNAL SOFT TISSUE AND SKELETAL ALTERATIONS

HAEL NO. 88-0017 ACCESSION NO. 907124 EXPERIMENT NO. 880017T6

START DATE: 15-AUG-88 ROUTE: INHALATION DOSE: 250.000PPM REPORT DATE: 13-JUN-89

DAM'S EAR TAG NO.	G 2 0 9	G 2 0 2	G 1 8 4	G 1 8 0	G 2 0 0	G 1 8 3	G 2 0 8	G 2 4 3	G 2 2 1	G 2 2 5	G 1 8 7	G 2 3 4	G 1 8 1	G 2 3 7	G 2 0 3	TOTAL	
DAM'S STUDY NO.	431	432	433	434	435	436	437	438	439	440	441	442	443	444	445	FETUSES	LITTERS
SKELETAL ALTERATIONS:	7	6	10	8	7	4	8	7	7	8	12	7				91	12
BONES SKULL																	
OSSIFICATION, PARTIAL																	
ZYGOMATIC AND PALATINE BONE						1										1	1
FRONTAL																	
PARIETAL																	
HYOID	4	2	1			4		1	1	3	6	4				26	9
DEFORMITY, NOS																	
HYOID																	
MISSHAPEN																	
HYOID												1				1	1
ABSENT OR MISSING																	
HYOID		2														2	1
OSSIFICATION, ABSENT																	
HYOID																	
CERVICAL ARCHES																	
MISALIGNED																	
CERVICAL ARCH 1										1						1	1
CERVICAL ARCH 2										1						1	1
CERVICAL ARCH 3										1						1	1
CERVICAL ARCH 4										1						1	1
CERVICAL ARCH 5										1						1	1
CERVICAL ARCH 6																	
CERVICAL ARCH 7																	
MISSHAPEN																	
CERVICAL ARCH 6																	
CERVICAL CENTRA																	
OSSIFICATION, PARTIAL																	
CERVICAL CENTRUM 1	3		1			1		1	6	1	5	5				23	8
CERVICAL CENTRUM 2																	
CERVICAL CENTRUM 3																	
CERVICAL CENTRUM 4																	
CERVICAL CENTRUM 5																	
CERVICAL CENTRUM 6																	
OSSIFICATION, ABSENT																	
CERVICAL CENTRUM 1																	

INDIVIDUAL LITTER DATA - EXTERNAL, INTERNAL SOFT TISSUE AND SKELETAL ALTERATIONS

HAEL NO. 88-0017 ACCESSION NO. 907124 EXPERIMENT NO. 880017T6

START DATE: 15-AUG-88 ROUTE: INHALATION DOSE: 250.000PPM REPORT DATE: 13-JUN-89

DAM'S EAR TAG NO.	G 2 0 9	G 2 0 2	G 1 8 4	G 1 8 0	G 2 0 0	G 1 8 3	G 2 0 8	G 2 4 3	G 2 2 1	G 2 2 5	G 1 8 7	G 2 3 4	G 1 8 1	G 2 3 7	G 2 0 3	TOTAL	
DAM'S STUDY NO.	431	432	433	434	435	436	437	438	439	440	441	442	443	444	445	FETUSES	LITTERS
BILOBED																	
CERVICAL CENTRUM 1							1									1	1
CERVICAL CENTRUM 3																	
MISALIGNED																	
CERVICAL CENTRUM 1										1						1	1
CERVICAL CENTRUM 2										1						1	1
CERVICAL CENTRUM 3										1						1	1
CERVICAL CENTRUM 4										1						1	1
CERVICAL CENTRUM 5										1						1	1
CERVICAL CENTRUM 6																	
CERVICAL CENTRUM 7																	
FUSED																	
CERVICAL CENTRUM 5																	
CERVICAL CENTRUM 6																	
MALPOSTION, NOS																	
CERVICAL CENTRUM 6																	
CERVICAL CENTRUM 7																	
SMALL																	
CERVICAL CENTRUM 6																	
THORACIC ARCHES																	
MISALIGNED																	
THORACIC ARCH 7																	
THORACIC ARCH 8																	
ABSENT OR MISSING																	
THORACIC ARCH 8																	
THORACIC CENTRA																	
MISSHAPEN																	
THORACIC CENTRUM 1																	
THORACIC CENTRUM 4																	
THORACIC CENTRUM 10																	
THORACIC CENTRUM 12																	
SPLIT																	
THORACIC CENTRUM 4																	
THORACIC CENTRUM 8																	
BILOBED																	
THORACIC CENTRUM 5																	

INDIVIDUAL LITTER DATA - EXTERNAL, INTERNAL SOFT TISSUE AND SKELETAL ALTERATIONS

HAEL NO. 88-0017 ACCESSION NO. 907124 EXPERIMENT NO. 880017T6

START DATE: 15-AUG-88 ROUTE: INHALATION DOSE: 250.000PPM REPORT DATE: 13-JUN-89

DAM'S EAR TAG NO.	G 2 0 9	G 2 0 2	G 1 8 4	G 1 8 0	G 2 0 0	G 1 8 3	G 2 0 8	G 2 4 3	G 2 2 1	G 2 2 5	G 1 8 7	G 2 3 4	G 1 8 1	G 2 3 7	G 2 0 3	TOTAL	
DAM'S STUDY NO.	431	432	433	434	435	436	437	438	439	440	441	442	443	444	445	FETUSES	LITTERS
THORACIC CENTRUM 6																	
THORACIC CENTRUM 7																	
THORACIC CENTRUM 8																	
OSSIFICATION, PARTIAL																	
THORACIC CENTRUM 6																	
THORACIC CENTRUM 11																	
OSSIFICATION, ABSENT																	
THORACIC CENTRUM 8																	
TAIL																	
15-17 VERT.																	
CAUDAL VERTEBRAE	5	6	11	9	10	4	8	7	7	8	12	8				95	12
MORE THAN 17 VERT.																	
CAUDAL VERTEBRAE																	
LESS THAN 15 VERT.																	
CAUDAL VERTEBRAE	2															2	1
STERNUM																	
BILOBED																	
STERNUM 2																	
OSSIFICATION, PARTIAL																	
STERNUM 2								1								1	1
STERNUM 5		1	7	7	8	3		1	5		8	8				48	9
STERNUM 6		1	3		1	3	4		1		2	4				19	8
MISSHAPEN																	
STERNUM 2																	
FUSED																	
STERNUM 3																	
STERNUM 4																	
STERNUM 5																	
DEFORMITY, NOS																	
STERNUM 4																	
OSSIFICATION, ABSENT																	
STERNUM 5	2		1		1					1						5	4
STERNUM 6	6		1				1					2				10	4
RIB																	
FUSED																	
RIB 6																	

INDIVIDUAL LITTER DATA - EXTERNAL, INTERNAL SOFT TISSUE AND SKELETAL ALTERATIONS

HAEL NO. 88-0017 ACCESSION NO. 907124 EXPERIMENT NO. 880017T6

START DATE: 15-AUG-88 ROUTE: INHALATION DOSE: 250.000PPM REPORT DATE: 13-JUN-89

DAM'S EAR TAG NO.	G 2 0 9	G 2 0 2	G 1 8 4	G 1 8 0	G 2 0 0	G 1 8 3	G 2 0 8	G 2 4 3	G 2 2 1	G 2 2 5	G 1 8 7	G 2 3 4	G 1 8 1	G 2 3 7	G 2 0 3	TOTAL	
DAM'S STUDY NO.	431	432	433	434	435	436	437	438	439	440	441	442	443	444	445	FETUSES	LITTERS
RIB 7																	
RIB 8																	
RIB 9																	
RIB 10																	
KNOBBY RIB,UNILATERAL																	
RIB 7																	
RIB 8																	
RIB 9																	
MISALIGNED																	
RIB 8																	
MISSHAPEN																	
RIB 11																	
EXTRA RIB, BILATERAL																	
RIB 13	6	3	7	4	5	3	7	5	2	8	1	1				52	12
EXTRA RIB, UNILATERAL																	
RIB 13	1	1		1	1	1	1	2	2		1					11	9
RUDIMENTARY RIB, UNILATERAL																	
RIB 13	1	2		2	2	1	1		3		3					15	8
RUDIMENTARY RIB, BILATERAL																	
RIB 13			2	1					2		2					7	4
PELVIS																	
OSSIFICATION, PARTIAL																	
PUBIS	1															1	1
OSSIFICATION, ABSENT																	
PUBIS	2															2	1
VERTEBRA																	
ABSENT OR MISSING																	
LUMBAR VERTEBRA, NOS	3															3	1
BONES OF RIGHT FOREPAW																	
OSSIFICATION, PARTIAL																	
PHALANGES 5	2		1					1		1		2				7	5
METACARPAL 1											1					1	1
PHALANGES 2																	
PHALANGES 4																	
PHALANGES 3																	
PHALANGES 1	1															1	1

INDIVIDUAL LITTER DATA - EXTERNAL, INTERNAL SOFT TISSUE AND SKELETAL ALTERATIONS

HAEL NO. 88-0017 ACCESSION NO. 907124 EXPERIMENT NO. 880017T6

START DATE: 15-AUG-88 ROUTE: INHALATION DOSE: 250.000PPM REPORT DATE: 13-JUN-89

DAM'S EAR TAG NO.	G 2 0 9	G 2 0 2	G 1 8 4	G 1 8 0	G 2 0 0	G 1 8 3	G 2 0 8	G 2 4 3	G 2 2 1	G 2 2 5	G 1 8 7	G 2 3 4	G 1 8 1	G 2 3 7	G 2 0 3	TOTAL	
DAM'S STUDY NO.	431	432	433	434	435	436	437	438	439	440	441	442	443	444	445	FETUSES	LITTERS
BONES OF LEFT FOREPAW OSSIFICATION, ABSENT																	
PHALANGES 5	3									1		1				5	3
METACARPAL 1	5								1							6	2
PHALANGES 4																	
PHALANGES 1																	
BONES OF RIGHT FOREPAW OSSIFICATION, ABSENT																	
PHALANGES 5	3	1	1			1				1		1				8	6
METACARPAL 1	5								2							7	2
PHALANGES 1																	
PHALANGES 4																	
BONES OF LEFT FOREPAW OSSIFICATION, PARTIAL																	
PHALANGES 5	2		1			1		1		1		2				8	6
PHALANGES 3																	
PHALANGES 4																	
PHALANGES 2																	
METACARPAL 1											1					1	1
PHALANGES 1																	
VERTEBRA ACCESSORY STRUCTURE																	
LUMBAR VERTEBRA, NOS			2							1						3	2
BONES OF LEFT HINDPAW OSSIFICATION, PARTIAL																	
PHALANGES 5	3															3	1
PHALANGES 1																	
PHALANGES 3																	
PHALANGES 2																	
PHALANGES 4																	
BONES OF RIGHT HINDPAW OSSIFICATION, PARTIAL																	
PHALANGES 5	3															3	1
PHALANGES 2																	
PHALANGES 3																	
PHALANGES 4																	

INDIVIDUAL LITTER DATA - EXTERNAL, INTERNAL SOFT TISSUE AND SKELETAL ALTERATIONS

HAEL NO. 88-0017 ACCESSION NO. 907124 EXPERIMENT NO. 880017T6

START DATE: 15-AUG-88 ROUTE: INHALATION DOSE: 250.000PPM REPORT DATE: 13-JUN-89

DAM'S EAR TAG NO.	G 2 0 9	G 2 0 2	G 1 8 4	G 1 8 0	G 2 0 0	G 1 8 3	G 2 0 8	G 2 4 3	G 2 2 1	G 2 2 5	G 1 8 7	G 2 3 4	G 1 8 1	G 2 3 7	G 2 0 3	TOTAL	
DAM'S STUDY NO.	431	432	433	434	435	436	437	438	439	440	441	442	443	444	445	FETUSES	LITTERS
HINDPAW OSSIFICATION, ABSENT CALCANEOUS	4															4	1
BONES OF RIGHT HINDPAW OSSIFICATION, ABSENT PHALANGES 5	2															2	1
BONES OF LEFT HINDPAW OSSIFICATION, ABSENT PHALANGES 5	2															2	1
CERVICAL ARCHES SPLIT ATLAS										1						1	1
BONES SKULL SPLIT ODONTOID										1						1	1
HINDPAW OSSIFICATION, PARTIAL CALCANEOUS																	
BONES SKULL ENLARGED,NOS FONTANEL																	

INDIVIDUAL LITTER DATA - EXTERNAL, INTERNAL SOFT TISSUE AND SKELETAL ALTERATIONS

HAEL NO. 88-0017 ACCESSION NO. 907124 EXPERIMENT NO. 880017T6

START DATE: 15-AUG-88 ROUTE: INHALATION DOSE: 500.000PPM REPORT DATE: 08-JUN-89

DAM'S EAR TAG NO.	G 2 0 7	G 2 1 4	G 1 9 8	G 1 8 9	G 1 9 1	G 1 9 2	G 2 4 2	G 2 1 8	G 2 3 3	G 2 3 9	G 2 2 7	G 2 2 8	G 2 2 7	G 2 3 6	G 2 3 0	TOTAL	
DAM'S STUDY NO.	446	447	448	449	450	451	452	453	454	455	456	457	458	459	460	FETUSES	LITTERS
NO. FETUSES EXAMINED:																	
EXTERNAL	10	NN	4	9	11	5	8	9	8	10	9	5	10	4	5	107	14
SOFT TISSUE	10	-	4	9	11	5	8	9	8	10	9	5	10	4	5	107	14
SKELETAL	10	-	4	9	11	5	8	9	8	10	9	5	10	4	5	107	14
EXTERNAL ALTERATIONS:				1										2		3	2
PROTRUSION																	
EYES																	
LEFT EYE																	
ABNORMAL APPEARANCE																	
HEAD				1												1	1
HEMATOMA																	
RIGHT HINDLIMB																	
LEFT HINDLIMB																	
OCCIPITAL																	
MALPOSTION, NOS																	
RIGHT FORELIMB																	
MICROPHTHALMIA																	
LEFT EYE														1		1	1
ARTHROGRYPOSIS																	
LEFT FORELIMB														1		1	1
SOFT TISSUE ALTERATIONS:	7		1	7	11	5	7	4	3	7	2	4	4	4	4	70	14
THORACIC CAVITY																	
HEMORRHAGE																	
THYMUS	4		1	7	10	2	7	4	2	5	1	4	4	4	2	57	14
SEAL HEART																	
HEART	1				1		1			3	1		2			9	6
SMALL																	
THYMUS																	
LUNGS									1							1	1
FLABBY																	
HEART																	
MISSHAPEN																	
HEART																	

INDIVIDUAL LITTER DATA - EXTERNAL, INTERNAL SOFT TISSUE AND SKELETAL ALTERATIONS

HAEL NO. 88-0017 ACCESSION NO. 907124 EXPERIMENT NO. 880017T6

START DATE: 15-AUG-88 ROUTE: INHALATION DOSE: 500.000PPM REPORT DATE: 08-JUN-89

DAM'S EAR TAG NO.	G 207	G 214	G 198	G 189	G 191	G 199	G 224	G 221	G 233	G 239	G 227	G 228	G 227	G 236	G 230	TOTAL	
DAM'S STUDY NO.	446	447	448	449	450	451	452	453	454	455	456	457	458	459	460	FETUSES	LITTERS
ATELECTASIS																	
LUNGS									1	1						2	2
KIDNEYS																	
DILATATION																	
RENAL PELVES				1		1				2		1				5	4
RENAL PELVIS																	
RIGHT RENAL PELVIS				1												1	1
LEFT RENAL PELVIS						1				1			1			3	3
SMALL																	
LEFT KIDNEY																	
MALPOSTION, NOS																	
LEFT KIDNEY																	
ABDOMINAL CAVITY																	
SMALL																	
SPLEEN	6					3			1				2		1	13	5
KIDNEYS																	
GALLBLADDER															2	2	1
ASCITES																	
ABDOMEN																	
ENLARGED AND DARK																	
LIVER																	
PALLOR																	
SPLEEN																	
HEART																	
DEFORMITY, NOS																	
SEPTUM																	
ABSENT OR MISSING																	
SEPTUM																	
INCOMINATE										1		2		1		4	3
LUNGS																	
ABSENT OR MISSING																	
POSTCAVAL LUNG LOBE												1				1	1
BRAIN																	
HYDROCEPHALUS																	
VENTRICLE																	

INDIVIDUAL LITTER DATA - EXTERNAL, INTERNAL SOFT TISSUE AND SKELETAL ALTERATIONS

HAEL NO. 88-0017 ACCESSION NO. 907124 EXPERIMENT NO. 880017T6

START DATE: 15-AUG-88 ROUTE: INHALATION DOSE: 500.000PPM REPORT DATE: 08-JUN-89

DAM'S EAR TAG NO.	G 207	G 214	G 191	G 189	G 191	G 199	G 224	G 221	G 233	G 223	G 227	G 228	G 227	G 236	G 230	TOTAL	
DAM'S STUDY NO.	446	447	448	449	450	451	452	453	454	455	456	457	458	459	460	FETUSES	LITTERS
SKELETAL ALTERATIONS:	10		4	8	10	5	8	8	8	10	9	5	10	4	5	104	14
BONES SKULL																	
OSSIFICATION, PARTIAL																	
ZYGOMATIC AND PALATINE BONE																	
FRONTAL										1						1	1
PARIETAL																	
HYOID					1			1	1	6	8		10	3		30	7
DEFORMITY, NOS																	
HYOID																	
MISSHAPEN																	
HYOID							1									1	1
ABSENT OR MISSING																	
HYOID																	
OSSIFICATION, ABSENT																	
HYOID							1									1	1
CERVICAL ARCHES																	
MISALIGNED																	
CERVICAL ARCH 1																	
CERVICAL ARCH 2																	
CERVICAL ARCH 3																	
CERVICAL ARCH 4																	
CERVICAL ARCH 5															1	1	1
CERVICAL ARCH 6															1	1	1
CERVICAL ARCH 7															1	1	1
MISSHAPEN																	
CERVICAL ARCH 6								1								1	1
CERVICAL CENTRA																	
OSSIFICATION, PARTIAL																	
CERVICAL CENTRUM 1			1	1	1	1		1	1	2	6		9	1	1	25	11
CERVICAL CENTRUM 2														1		1	1
CERVICAL CENTRUM 3														1		1	1
CERVICAL CENTRUM 4													1			1	1
CERVICAL CENTRUM 5													1	1		2	2
CERVICAL CENTRUM 6								1						1		2	2
OSSIFICATION, ABSENT																	
CERVICAL CENTRUM 1																	

INDIVIDUAL LITTER DATA - EXTERNAL, INTERNAL SOFT TISSUE AND SKELETAL ALTERATIONS

HAEL NO. 88-0017 ACCESSION NO. 907124 EXPERIMENT NO. 880017T6

START DATE: 15-AUG-88 ROUTE: INHALATION DOSE: 500.000PPM REPORT DATE: 08-JUN-89

AM'S EAR TAG NO.	G 2 0 7	G 2 1 4	G 1 9 8	G 1 8 9	G 1 9 1	G 1 9 2	G 2 4 2	G 2 1 8	G 2 3 3	G 2 3 9	G 2 2 7	G 2 2 8	G 2 2 7	G 2 3 6	G 2 3 0	TOTAL	
AM'S STUDY NO.	446	447	448	449	450	451	452	453	454	455	456	457	458	459	460	FETUSES	LITTERS
BILOBED																	
CERVICAL CENTRUM 1																	
CERVICAL CENTRUM 3																	
MISALIGNED																	
CERVICAL CENTRUM 1																	
CERVICAL CENTRUM 2																	
CERVICAL CENTRUM 3																	
CERVICAL CENTRUM 4																	
CERVICAL CENTRUM 5																	
CERVICAL CENTRUM 6								1								1	1
CERVICAL CENTRUM 7								1								1	1
FUSED																	
CERVICAL CENTRUM 5															1	1	1
CERVICAL CENTRUM 6															1	1	1
SMALL																	
CERVICAL CENTRUM 6															1	1	1
MALPOSTION, NOS																	
CERVICAL CENTRUM 6															1	1	1
CERVICAL CENTRUM 7															1	1	1
THORACIC ARCHES																	
MISALIGNED																	
THORACIC ARCH 7															1	1	1
THORACIC ARCH 8															1	1	1
ABSENT OR MISSING																	
THORACIC ARCH 8																	
THORACIC CENTRA																	
MISSHAPEN																	
THORACIC CENTRUM 1								1							1	2	2
THORACIC CENTRUM 4														1		1	1
THORACIC CENTRUM 10													1			1	1
THORACIC CENTRUM 12													1			1	1
SPLIT																	
THORACIC CENTRUM 4																	
THORACIC CENTRUM 8																	
BILOBED																	
THORACIC CENTRUM 5														1		1	1

INDIVIDUAL LITTER DATA - EXTERNAL, INTERNAL SOFT TISSUE AND SKELETAL ALTERATIONS

HAEL NO. 88-0017 ACCESSION NO. 907124 EXPERIMENT NO. 880017T6

START DATE: 15-AUG-88 ROUTE: INHALATION DOSE: 500.000PPM REPORT DATE: 08-JUN-89

DAM'S EAR TAG NO.	G 207	G 214	G 198	G 189	G 191	G 199	G 224	G 228	G 233	G 239	G 227	G 228	G 227	G 236	G 230	TOTAL	
DAM'S STUDY NO.	446	447	448	449	450	451	452	453	454	455	456	457	458	459	460	FETUSES	LITTERS
THORACIC CENTRUM 6																	
THORACIC CENTRUM 7															1	1	1
THORACIC CENTRUM 8															1	1	1
OSSIFICATION, PARTIAL																	
THORACIC CENTRUM 6											1					1	1
THORACIC CENTRUM 11													1			1	1
OSSIFICATION, ABSENT																	
THORACIC CENTRUM 8															1	1	1
TAIL																	
15-17 VERT.																	
CAUDAL VERTEBRAE	10		4	9	11	5	8	9	8	9	8	5	10	4	5	105	14
MORE THAN 17 VERT.																	
CAUDAL VERTEBRAE											1					1	1
LESS THAN 15 VERT.																	
CAUDAL VERTEBRAE										1						1	1
OSSIFICATION, ABSENT																	
CAUDAL VERTEBRAE																	
OSSIFICATION, PARTIAL																	
CAUDAL VERTEBRAE																	
STERNUM																	
BILOBED																	
STERNUM 2																	
OSSIFICATION, PARTIAL																	
STERNUM 2					1				2	1						4	3
STERNUM 5	5			3	3	1	5	3	5	7	3	3	10	2		50	12
STERNUM 6					1		3		1	4	4	1	5			19	7
MISSHAPEN																	
STERNUM 2															1	1	1
FUSED																	
STERNUM 3																	
STERNUM 4															1	1	1
STERNUM 5															1	1	1
DEFORMITY, NOS																	
STERNUM 4																	
OSSIFICATION, ABSENT																	
STERNUM 5								1								1	1

INDIVIDUAL LITTER DATA - EXTERNAL, INTERNAL SOFT TISSUE AND SKELETAL ALTERATIONS

HAEL NO. 88-0017 ACCESSION NO. 907124 EXPERIMENT NO. 880017T6

START DATE: 15-AUG-88 ROUTE: INHALATION DOSE: 500.000PPM REPORT DATE: 08-JUN-89

AM'S EAR TAG NO.	G 2 0 7	G 2 1 4	G 1 9 8	G 1 8 9	G 1 9 1	G 1 9 2	G 2 4 2	G 2 1 8	G 2 3 3	G 2 3 9	G 2 2 7	G 2 2 8	G 2 2 7	G 2 3 6	G 2 3 0	TOTAL	
AM'S STUDY NO.	446	447	448	449	450	451	452	453	454	455	456	457	458	459	460	FETUSES	LITTERS
STERNUM 6										1		3	5		1	10	4
RIB																	
FUSED																	
RIB 6											1					1	1
RIB 7											1					1	1
RIB 8																	
RIB 9																	
RIB 10																	
KNOBBY RIB,UNILATERAL																	
RIB 7																	
RIB 8																	
RIB 9																	
MISALIGNED																	
RIB 8															1	1	1
MISSHAPEN																	
RIB 11																	
EXTRA RIB, BILATERAL																	
RIB 13	10		4	7	9	4	7	5	3	8	5	5	4	4	4	79	14
RUDIMENTARY RIB, UNILATERAL																	
RIB 13				1		1	1		3	2	2		2		1	13	8
EXTRA RIB, UNILATERAL																	
RIB 13						1	1		2	2	2		3		1	12	7
RUDIMENTARY RIB, BILATERAL																	
RIB 13					1			1	2							4	3
PELVIS																	
OSSIFICATION, PARTIAL																	
PUBIS																	
OSSIFICATION, ABSENT																	
PUBIS										1						1	1
VERTEBRA																	
ABSENT OR MISSING																	
LUMBAR VERTEBRA, NOS	3							2			1					6	3
BONES OF LEFT FOREPAW																	
OSSIFICATION, ABSENT																	
PHALANGES 5										1	5	1	5		1	13	5
METACARPAL 1										4			3			7	2

INDIVIDUAL LITTER DATA - EXTERNAL, INTERNAL SOFT TISSUE AND SKELETAL ALTERATIONS

HAEL NO. 88-0017 ACCESSION NO. 907124 EXPERIMENT NO. 880017T6

START DATE: 15-AUG-88 ROUTE: INHALATION DOSE: 500.000PPM REPORT DATE: 08-JUN-89

DAM'S EAR TAG NO.	G 207	G 214	G 118	G 189	G 191	G 119	G 224	G 221	G 233	G 233	G 227	G 228	G 227	G 236	G 230	TOTAL	
DAM'S STUDY NO.	446	447	448	449	450	451	452	453	454	455	456	457	458	459	460	FETUSES	LITTERS
PHALANGES 1										1						1	1
PHALANGES 4										1						1	1
BONES OF RIGHT FOREPAW																	
OSSIFICATION, PARTIAL																	
PHALANGES 5			1		2						2	2	1	1		9	6
METACARPAL 1											1		1		1	3	3
PHALANGES 2																	
PHALANGES 4											1					1	1
PHALANGES 3																	
PHALANGES 1													1			1	1
OSSIFICATION, ABSENT																	
PHALANGES 5										1	5	1	5		2	14	5
METACARPAL 1										5	1		3			9	3
PHALANGES 4										1						1	1
PHALANGES 1										1	1					2	2
BONES OF LEFT FOREPAW																	
OSSIFICATION, PARTIAL																	
PHALANGES 5			1		2						2	2	1	1	1	10	7
PHALANGES 4											1					1	1
PHALANGES 3																	
PHALANGES 2																	
METACARPAL 1										1	2		1		1	5	4
PHALANGES 1											1					1	1
VERTEBRA																	
ACCESSORY STRUCTURE																	
LUMBAR VERTEBRA, NOS									1			2		1		4	3
BONES OF RIGHT HINDPAW																	
OSSIFICATION, PARTIAL																	
PHALANGES 5										1	1					2	2
PHALANGES 4										1						1	1
PHALANGES 2										1						1	1
PHALANGES 3										1						1	1
HINDPAW																	
OSSIFICATION, ABSENT																	
CALCANEOUS																	
BONES OF LEFT HINDPAW																	
OSSIFICATION, PARTIAL																	
PHALANGES 5										1	1					2	2

INDIVIDUAL LITTER DATA - EXTERNAL, INTERNAL SOFT TISSUE AND SKELETAL ALTERATIONS

HAEL NO. 88-0017 ACCESSION NO. 907124 EXPERIMENT NO. 880017T6

START DATE: 15-AUG-88 ROUTE: INHALATION DOSE: 500.000PPM REPORT DATE: 08-JUN-89

DAM'S EAR TAG NO.	G 2 0 7	G 2 1 4	G 1 9 8	G 1 8 9	G 1 9 1	G 1 9 2	G 2 4 2	G 2 1 8	G 2 3 3	G 2 3 9	G 2 2 7	G 2 2 8	G 2 2 7	G 2 3 6	G 2 3 0	TOTAL	
DAM'S STUDY NO.	446	447	448	449	450	451	452	453	454	455	456	457	458	459	460	FETUSES	LITTERS
PHALANGES 3										1						1	1
PHALANGES 1										1						1	1
PHALANGES 2										1						1	1
PHALANGES 4										1						1	1
BONES OF RIGHT HINDPAW																	
OSSIFICATION, ABSENT																	
PHALANGES 5										1						1	1
BONES OF LEFT HINDPAW																	
OSSIFICATION, ABSENT																	
PHALANGES 5										1						1	1
BONES SKULL																	
SPLIT																	
ODONTOID																	
CERVICAL ARCHES																	
SPLIT																	
ATLAS																	
HINDPAW																	
OSSIFICATION, PARTIAL																	
CALCANEOUS										1						1	1
BONES SKULL																	
ENLARGED,NOS																	
FONTANEL											3					3	1

CHEMICALS QUALITY SERVICES DIVISION REPORT FOR: TOXICOLOGY

CQSD FILE #: EE8H014

DATE RECEIVED: 08/04/88
08/08/88

STUDY DIRECTORS: E. Renner, W. Krasavage
G. Katz

DATE ANALYZED: 08/09/88

REQUEST #: 131144 and 126659

DATE REPORTED: 08/11/88

TITLE: Purity and Structure Confirmation

AUTHOR: N. Porter

SAMPLE IDENTIFICATION: Ethylene Glycol Monopropyl Ether, HAEL # 88-0017, ACC # 907124, Lot T6Z-15(1/15/88) and Lot T6Z-15(7/21/88)

FOR MORE INFORMATION OR FURTHER WORK PLEASE CONTACT: K. Robillard, N. Porter

REPORT:

Two samples of the test chemcial were received and analyzed for purity using GC/FID, and analyzed by GC/MS by electron ionization for structure confirmation.

The results are as follows:

Purity (area percent)

Lot 1/15/88	Mean = 99.8 n = 3 SD = 0	Lot 7/21/88	Mean = 99.9 n = 3 SD = 0

The mass spectra of the two samples are identical to one another and consistent with the structure of ethylene glycol monopropyl ether, based on comparison with reference library spectrum.

SIGNED: Nancy Porter
K.A. Robillard
8-26-88

CHEMICALS QUALITY SERVICES DIVISION REPORT FOR: TOXICOLOGY

CQSD FILE #: EE8H014

DATE RECEIVED: 09/12/88

STUDY DIRECTORS: W. Krasavage

DATE ANALYZED: 09/13/88

REQUESTED BY: E. Renner # 126660

DATE REPORTED: 09/13/88

TITLE: Purity and Structure Confirmation

AUTHOR: N. Porter

SAMPLE IDENTIFICATION: Ethylene Glycol Monopropyl Ether, HAEL # 88-0017, ACC # 907124

FOR MORE INFORMATION OR FURTHER WORK PLEASE CONTACT: K. Robillard, N. Porter

REPORT:

One sample of the test chemcial was received and analyzed for purity using GC/FID, and analyzed by GC/MS by electron ionization for structure confirmation.

The results are as follows:

Purity (area percent)

Mean = 99.8
n = 3
SD = 0.32

The mass spectra of the sample is consistent with the structure of ethylene glycol monopropyl ether, based on comparison with reference library spectrum. There were no major contaminants to identify.

SIGNED: N. Porter
K A Robillard
9-26-88

Inhalation Report

Summary

Exposures to EP were conducted in 4.2 m^3 stainless steel and glass inhalation chambers at target concentrations of 0, 125, 250, and 500 ppm. The chambers were maintained at a negative pressure of 0.5 inch water relative to room air, and at 12 air changes per hour. For each concentration level, rabbits were singly housed and exposed for six hours.

The EP vapor distribution was measured for 8 cage positions within each inhalation chamber, and compared to a fixed reference position. Subsequently, chamber vapor concentration was measured from a fixed sampling position selected to represent the overall chamber mean concentration.

Mean EP vapor concentrations (± SD) determined by infrared spectroscopy were 0 ± 0, 126 ± 8, 248 ± 24, and 511 ± 16 ppm. These concentrations were comparable to the target values of 0, 125, 250, and 500 ppm. Nominal concentrations were 183, 379, and 503 ppm.

Overall chamber temperature and relative humidity varied from 72 to 75°F (22 to 24°C) and 49 to 53%, respectively.

No mortality occurred during the exposure phase of this study.

A complete description of EP generation, sampling, and analysis is presented on the following pages.

There were no SOP or protocol deviations.

Test Atmosphere Generation

Ethylene glycol monopropyl ether (EP) was metered by a FMI Fluid Metering Pump Model No. RP-SY, (Fluid Metering, Inc., Oyster Bay, NY) from a graduated cylinder reservoir, into a glass distilling column (7/8" x 15", Ace Glass Inc., Vineland, NJ). The liquid trickled over the surface of tightly packed glass beads (4 mm diameter) within the column. Compressed air (Kodak Park Utilities Division) metered at 24, 24, 28, and 33 Lpm for groups 1, 2, 3, and 4, respectively, was passed through an indicating silica gel drier and an oil filter (Deltech Engineering Inc., New Castle, DE). The dried, oil-free air entered the column and passed over the surface of the glass beads (See Figure, Page 6 of 10). Vapor temperature was measured in a round bottom flask as it exhausted the distilling column and was maintained at an elevated temperature, to reduce the potential for condensation. The liquid delivery rate and compressed airflow rate were adjusted to produce the desired chamber target vapor concentration. The resultant vapor was directed via glass tubing to a

tee just upstream of the inhalation chamber where it was mixed with filtered, conditioned exterior dilution air (840 liters per minute total airflow) to produce 12 air changes per hour. The chamber effluent air was filtered through HEPA and charcoal filters.

Vapor Analysis

Chamber vapor concentrations were monitored with an automated multipositional air sampling and analysis system. The system consisted of a MIRAN® IA infrared gas analyzer (Wilks Foxboro Analytical, South Norwalk, CT), a Perkin-Elmer SIGMA 15 data station, and a four-port multipositional environmental sampling valve (Valco Instruments, Houston, TX). The system was configured as shown in Figure, Page 7 of 10.

Chamber vapor samples were continuously collected, from a fixed reference position (centered between cages 7 and 16 - based on a vapor distribution study described in a subsequent section - see also Figure, Page 8 of 10), through the four port valve using TEFLON® tubing (3/16" ID). The voltage output of a sampled atmosphere was integrated over a one minute interval following a five minute flushing period. The Perkin-Elmer SIGMA 15 data station calculated the vapor concentration by analog-to-digital conversion and linear interpolation between selected calibration data points. These points were produced by the "MIRAN" calibration program during technical development. Basic program called "Temp", is used by the SIGMA 15 microprocessor for automated Vapor concentration calculation by simple linear interpolation between specific data points on the calibration curve. Then, the procedure is repeated until termination of the six-hour exposure.

The nominal concentration was calculated by dividing the amount of EP consumed from the graduated reservoir (determined volumetrically), by the total chamber air flow using the formula:

$$C\ (ppm) = \frac{V_1 \times p \times 1000}{V_2} \times \frac{24.45}{MW}$$

where: V_1 = amount vaporized (mL)
p = EP density = 0.913 g/cc
V_2 = total daily chamber air flow = 302.4 m^3
24.45 = molar volume at 1 atm and 25°C
MW = EP molecular weight = 104.15

Total chamber flow was monitored via a MAGNEHELIC® gauge (Dwyer Instruments, Inc., Michigan City, IN) which measured the differential pressure across an orifice located in the chamber exhaust duct. The chamber flow corresponding to the gauge value was determined weekly, using a KURZ hotwire anemometer (Kurz Instruments, Inc., Carmel Valley, CA) to determine the linear velocity of the supply air. From the supply air linear velocity, the mass flow (L/min) was calculated from the following formula:

$$Q = \frac{I \times V}{1000}$$

where: Q = Supply air flow rate (L/min)
I = Cross sectional area of the air supply duct
3.14159 x (2 in. x 2.54 cm/in.)^2 sq. cm
V = Linear Velocity determined from the anemometer and converted to cm/min.
1000 = Conversion from cubic centimeters to liters.

The chamber was maintained at a negative pressure of 0.5 inch of water (gauge).

Aerosol Measurements

A Royco Model 4100 Aerosol Particle Counter (HIAC/Royco Instruments Division, Pacific Scientific, Menlo Park, CA) was used to measure non-gaseous airborne material within each EP inhalation chamber. The particle counter sampled the chamber atmosphere once each day during exposure from a fixed reference position at 0.01 cfm for one minute, and counted airborne particles greater than 0.5 µm. The results were compared to that of an air chamber, and the equivalent vapor concentration from the particle count was calculated as if all the particulate matter was EP. The equivalent vapor concentration never exceeded 0.05 ppm (approximately 0.01% of the 400 ppm target concentration) and did not represent a significant amount of EP aerosol.

Chamber Temperature and Humidity

Chamber temperature and humidity were recorded semihourly during each exposure from a modified Taylor hygrometer (Taylor Instruments, Sybron Corp., Arden, NC). The hygrometer was modified to provide sufficient ventilation for the wet bulb sock, by drawing air over the surface of the wet bulb at about 5 L/min with a vacuum source located outside the chamber. The effluent air was filtered through HEPA and charcoal filters.

MIRAN® IA Infrared Analyzer Operating Parameters and Calibration

The infrared analyzer operating parameters were as follows:

MIRAN® No.	2
Pathlength (m)	3.75
Wavelength (um)	3.44
Slit (mm)	1
Response Time (sec)	1
Range (Absorption)	1
Gain	x1
Temperature (°K)	298
Pressure (atm)	0.833

These parameters were selected by comparing the EP infrared spectra to that of EP-free air.

The infrared analyzer was calibrated for EP quantitation by making serial injections (Hamilton microliter syringe) into a closed-loop cell with a measured volume of EP. Each serial injection concentration was determined from the following formula:

$$C = \frac{\rho \times V_1}{MW} \times \frac{R \times T}{P} \times \frac{1000}{V_2}$$

where: C = concentration (ppm)
ρ = density = 0.913 g/cc
V_1 = serial injection volume (µL)
MW = molecular weight = 104.15 g/mole
R = gas constant = 0.08205
T = MIRAN® cell temperature = 298°K
P = MIRAN® cell pressure = 0.833 atm
V_2 = MIRAN® cell volume = 5.64 L

Three sets of serial injections were made to produce a mean calibration curve of EP concentration versus infrared analyzer output voltage. The calibration data were stored in an AATS computer file. Voltage data were converted to concentration by linear interpolation between the calibration data points immediately on each side of the sampled data, as described previously under the section Vapor Analysis.

An infrared analyzer calibration check was performed just prior to exposure of the first group, by injecting a measured amount of EP into the MIRAN® closed calibration loop. The infrared analyzer output voltage was converted to EP concentration and compared to the calculated expected concentration. The two concentrations varied from each other by a range of -0.9 to 3.4%.

Chamber Vapor Distribution

Vapor distribution within each chamber, to determine positional variations in concentration, was characterized in the developmental toxicity probe study (880017T4) which immediately preceeded the present study. The atmosphere was sequentially sampled from within 8 cage positions (Figure, Page 9 of 10). Reference samples from a fixed position, were alternated with cage samples, and were taken from a near center location (between cages 5 and 14).

All samples were analyzed by infrared spectroscopy. The mean concentration (relative standard deviation) of the samples taken from the 8 cage positions was 484 ppm (7%), 1040 ppm (16%), and 967 ppm (5%), for chambers C-02, C-03, and C-04, respectively (Table, Page 10 of 10). The mean concentration and (relative standard deviation) of the 8 samples from the fixed reference position was 413 ppm (3%), 828 ppm (2%), and 918 ppm (1%) for chambers C-02, C-03, and C-04, respectively. The results indicate that the EP vapor concentration of the cage positions is higher than the reference position, and there is more variability between cage positions, than reference positions. Cage position 7 was selected as the reference position, because it approximates the mean concentration of the cage positions.

Gary Katz 4-26-89
Gary V. Katz Ph.D.

GVK:gvk
04/26/89
4623T

STUDY SUMMARY OF EXPOSURE CONDITIONS

Compound: Ethylene Glycol Monopropyl Ether (EP)

Study No: 880017T6
Accession No: 907124
Compound No: 88-0017

Target Concentration (ppm)	0	125	250	500
Number of Exposures	21	21	21	21
Analyzed Concentration (ppm)				
Mean[1] ± SD	0±0	126±8	248±24	511±16
n	221	222	222	219
Extremes of Daily Means	0-0	102-157	173-314	457-554
Nominal Concentration (ppm)				
Mean[2] ± SD	0	183±20	379±29	503±25
n	21	21	21	21
Temperature (°C)				
Mean ± SD	22.3±0.8	23.3±0.8	23.9±0.8	23.6±0.8
n	252	252	252	252
Relative Humidity (±)				
Mean ± SD	49±4	52±3	49±4	53±3
n	252	252	252	252

[1]Particle count data indicated that no aerosol was present.
[2]Calculated from daily chemical consumption and total airflow.

VAPOR GENERATING SYSTEM

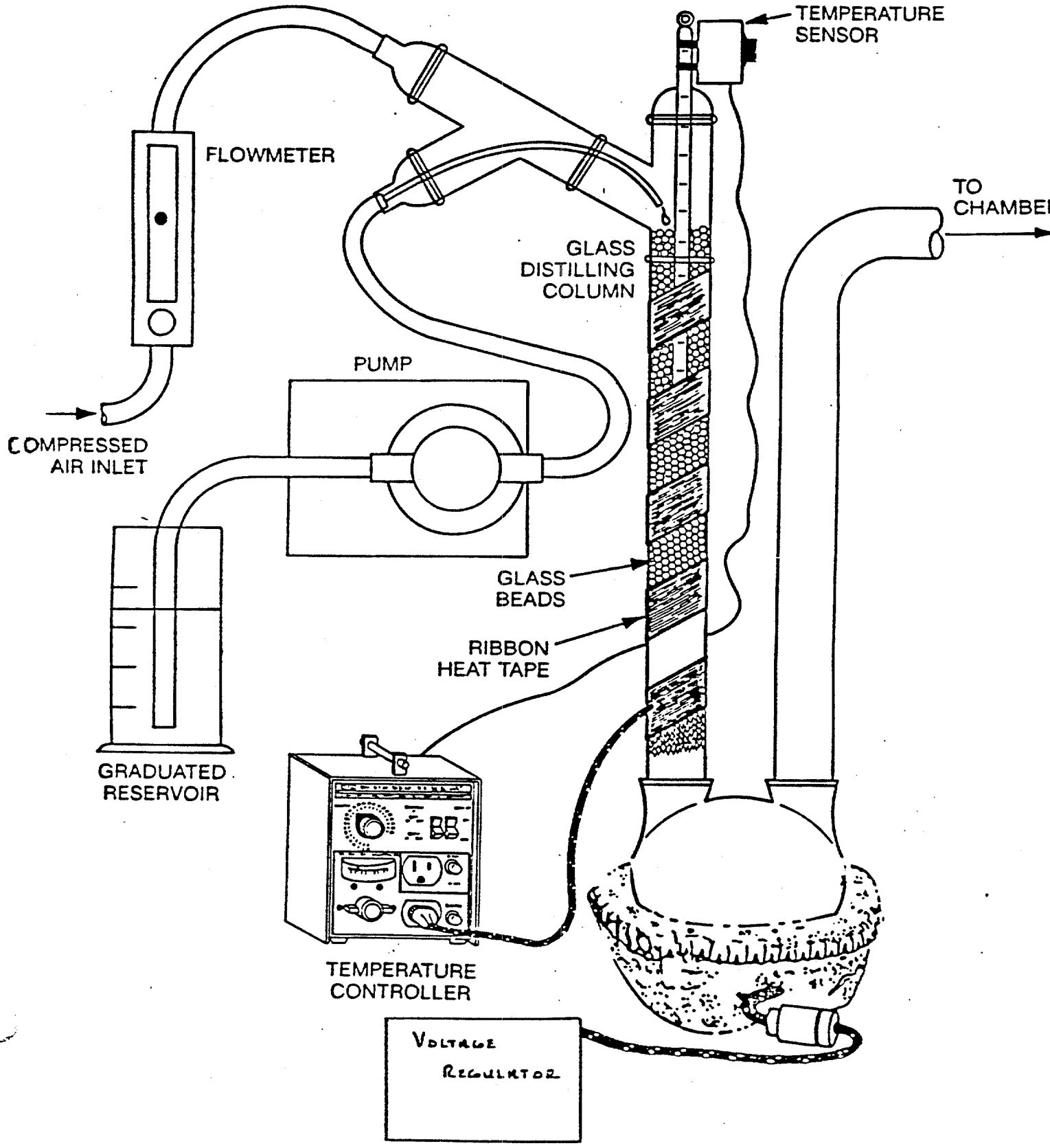

AUTOMATED MULTIPOSITIONAL ENVIRONMENTAL SAMPLING AND ANALYSIS SYSTEM

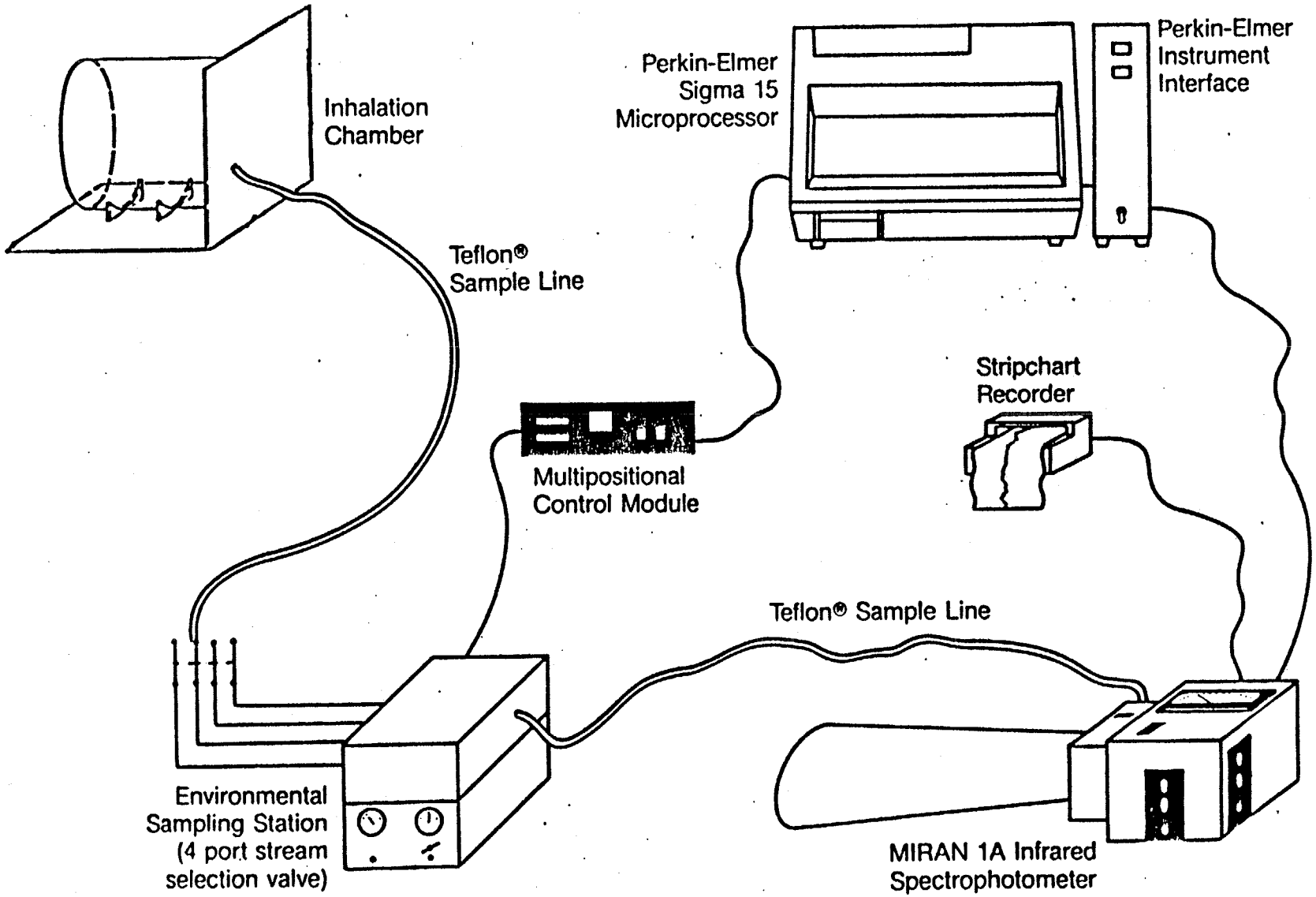

EXPLODED VIEW OF C-SERIES CHAMBER

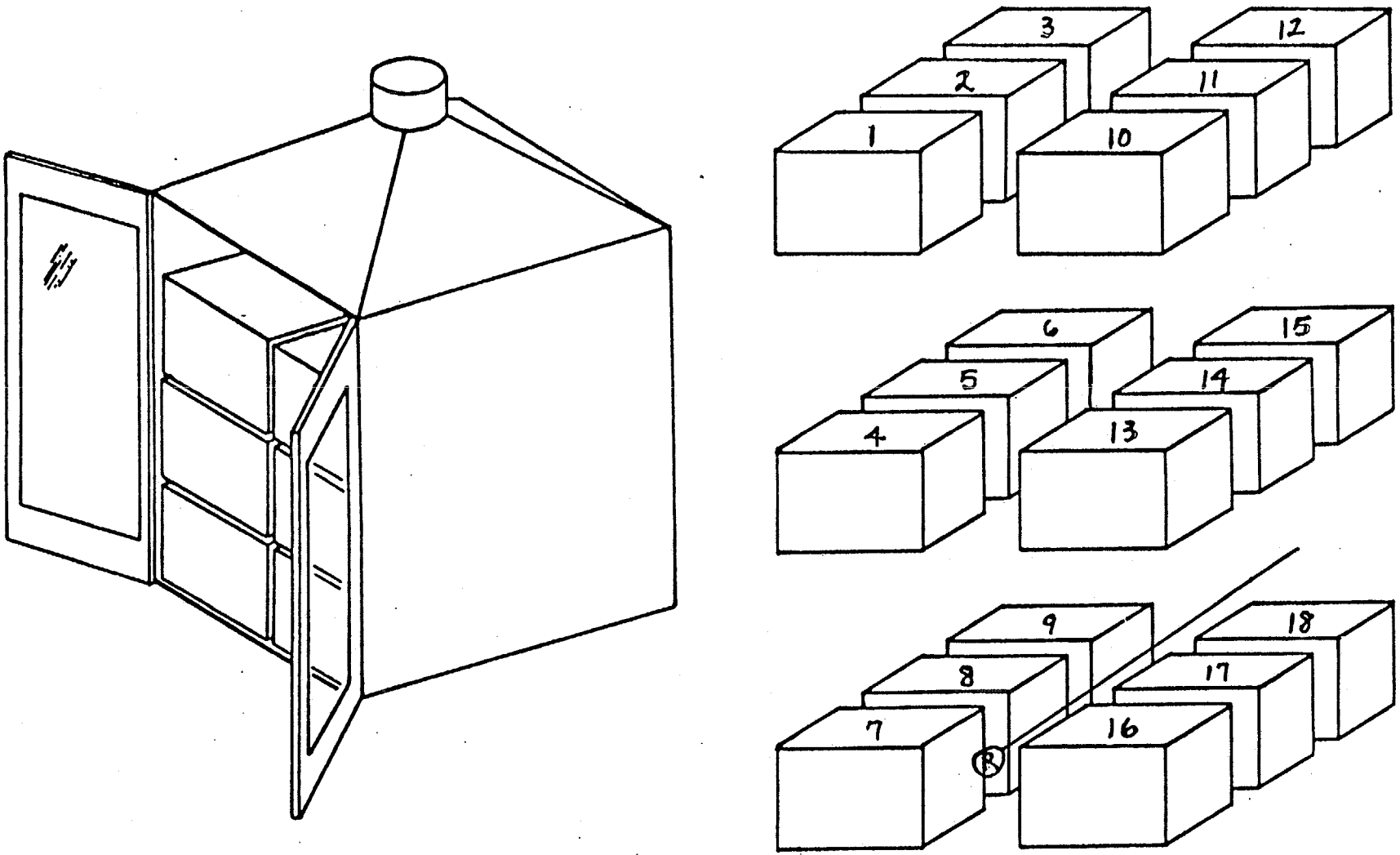

Cage orientation and position of air sampler (R) for determination of chamber concentration.

EXPLODED VIEW OF C-SERIES CHAMBER

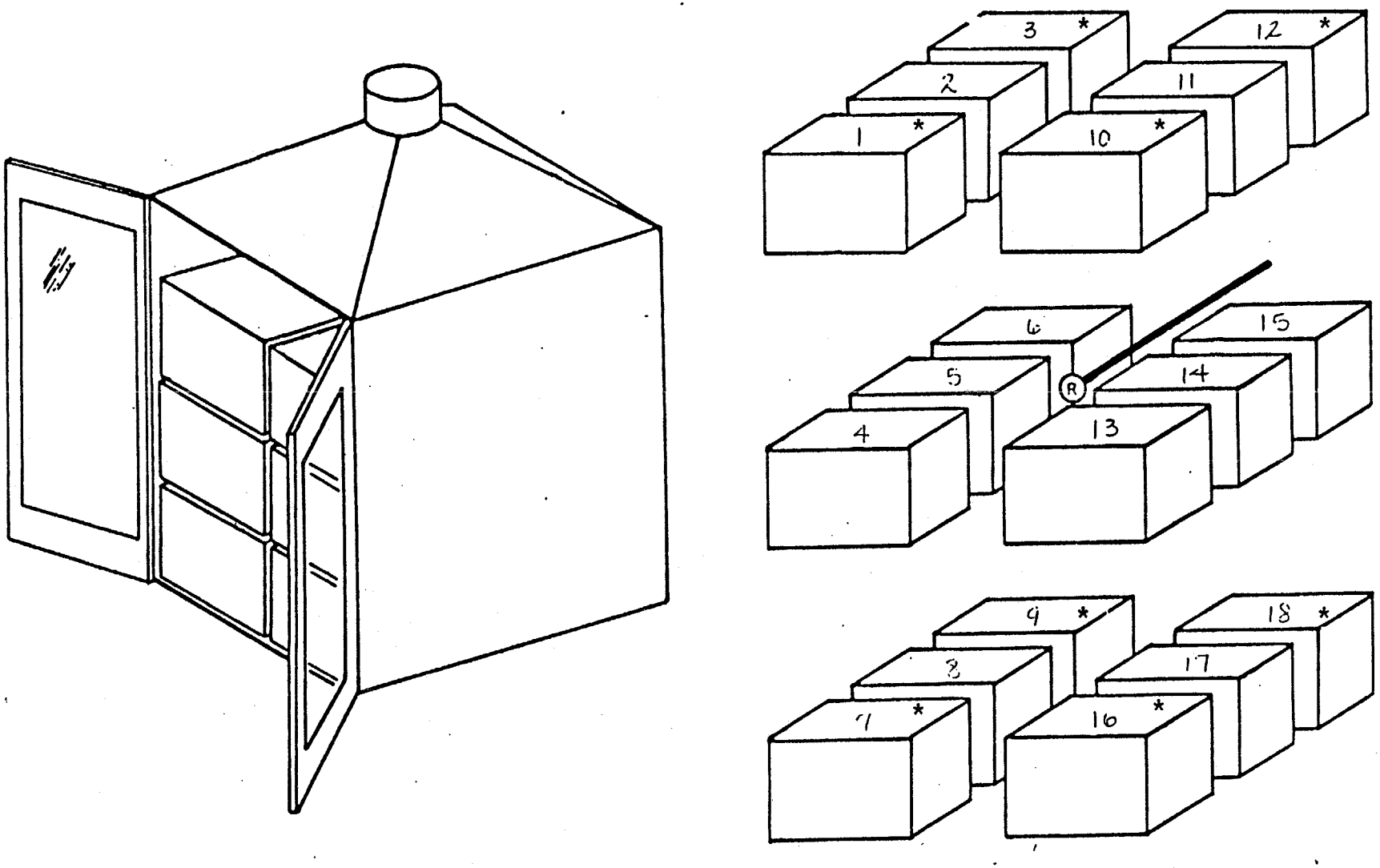

*These 8 cages were sampled for vapor distribution analysis.

EP Vapor Concentration (ppm)

Cage Position	Chamber C-02	C-03	C-04
1	519	1129	1037
3	474	1180	999
7	495	1014	983
9	437	1138	949
10	514	1176	937
12	521	892	1024
16	463	1087	906
18	445	700	904
Cage Position Mean	484	1040	967
Cage Position S.D.	34	167	51
Ref. Position Mean	413	828	918
Ref. Position S.D.	12	17	7

Absolute Percentage Difference from Mean Cage Concentration

Cage Position	Chamber C-02	C-03	C-04
1	7.3	8.6	7.2
3	2.0	13.5	3.3
7[1]	2.4	2.5	1.6
9	9.6	9.5	1.9
10	6.3	13.1	3.1
12	7.8	14.2	5.9
16	4.2	4.6	6.3
18	8.0	32.7	6.6

[1] Cage position 7 selected as a reference position due to the low variation from the mean of the cage postions

UNITED STATES ENVIRONMENTAL PROTECTION AGENCY
WASHINGTON, D.C. 20460

R. Hays Bell, Ph.D.
Vice President, Corporate Health, Safety, and Environment
Eastman Kodak Company
343 State Street
Rochester, New York 14650

OFFICE OF
PREVENTION, PESTICIDES AND
TOXIC SUBSTANCES

MAY 0 8 1995

EPA acknowledges the receipt of information submitted by your organization under Section 8(e) of the Toxic Substances Control Act (TSCA). For your reference, copies of the first page(s) of your submission(s) are enclosed and display the TSCA §8(e) Document Control Number (e.g., 8EHQ-00-0000) assigned by EPA to your submission(s). Please cite the assigned 8(e) number when submitting follow-up or supplemental information and **refer to the reverse side of this page for "EPA Information Requests"** .

All TSCA 8(e) submissions are placed in the public files unless confidentiality is claimed according to the procedures outlined in Part X of EPA's TSCA §8(e) policy statement (43 FR 11110, March 16, 1978). Confidential submissions received pursuant to the TSCA §8(e) Compliance Audit Program (CAP) should already contain information supporting confidentiality claims. This information is required and should be submitted if not done so previously. To substantiate claims, submit responses to the questions in the enclosure "Support Information for Confidentiality Claims". This same enclosure is used to support confidentiality claims for non-CAP submissions.

Please address any further correspondence with the Agency related to this TSCA 8(e) submission to:

Document Processing Center (7407)
Attn: TSCA Section 8(e) Coordinator
Office of Pollution Prevention and Toxics
U.S. Environmental Protection Agency
Washington, D.C. 20460-0001

EPA looks forward to continued cooperation with your organization in its ongoing efforts to evaluate and manage potential risks posed by chemicals to health and the environment.

Sincerely,

Terry R. O'Bryan

Terry R. O'Bryan
Risk Analysis Branch

Enclosure 12046A

Recycled/Recyclable
Printed with Soy/Canola Ink on paper that contains at least 50% recycled fiber

Triage of 8(e) Submissions

Date sent to triage: _____ NON-CAP (CAP)

Submission number: 12046A TSCA Inventory: (Y) N D

Study type (circle appropriate):

Group 1 - Dick Clements (1 copy total)

(ECO) (AQUATO)

Group 2 - Ernie Falke (1 copy total)

(ATOX) (SBTOX) (SEN) w/NEUR

Group 3 - Elizabeth Margosches (1 copy each)

STOX	CTOX	EPI	RTOX	GTOX
STOX/ONCO	CTOX/ONCO	IMMUNO	CYTO	NEUR

Other (FATE, EXPO, MET, etc.): _____

Notes:

THIS IS THE ORIGINAL 8(e) SUBMISSION; PLEASE REFILE AFTER TRIAGE DATABASE ENTRY

Please combine these studies with the rest of 12046A when retiling

(

For Contractor Use Only

entire document: 0 (1) 2 pages 1,2,3 pages 1,2,3, YNBS

Notes:

Contractor reviewer : PDL Date: 4/19/95

CECATS\TRIAGE TRACKING DBASE ENTRY FORM

CECATS DATA:
Submission # 8EHQ- 0992 - 12046 SEQ. A

TYPE: (INT) SUPP FLWP

SUBMITTER NAME: Eastman Kodak Company

INFORMATION REQUESTED: FLWP DATE:
0501 NO INFO REQUESTED
0502 INFO REQUESTED (TECH)
0503 INFO REQUESTED (VOL ACTIONS)
0504 INFO REQUESTED (REPORTING RATIONALE)

DISPOSITION:
(0639) REFER TO CHEMICAL SCREENING
(0678) CAP NOTICE

VOLUNTARY ACTIONS:
(0401) NO ACTION REPORTED
0402 STUDIES PLANNED/UNDERWAY
0403 NOTIFICATION OF WORKERS/OTHERS
0404 LABEL/MSDS CHANGES
0405 PROCESS/HANDLING CHANGES
0406 APP./USE DISCONTINUED
0407 PRODUCTION DISCONTINUED
0408 CONFIDENTIAL

SUB. DATE: 09/28/92 OTS DATE: 09/30/92 CSRAD DATE: 01/26/92

CHEMICAL NAME: ethylene glycol monopropyl ether

CAS# 2807-30-9

INFORMATION TYPE:		P F C	INFORMATION TYPE:		P F C	INFORMATION TYPE:		P F C
0201	ONCO (HUMAN)	01 02 04	0216	EPI/CLIN	01 02 04	0241	IMMUNO (ANIMAL)	01 02 04
0202	ONCO (ANIMAL)	01 02 04	0217	HUMAN EXPOS (PROD CONTAM)	01 02 04	0242	IMMUNO (HUMAN)	01 02 04
0203	CELL TRANS (IN VITRO)	01 02 04	0218	HUMAN EXPOS (ACCIDENTAL)	01 02 04	(0243)	CHEM/PHYS PROP	01 02 04
0204	MUTA (IN VITRO)	01 02 04	0219	HUMAN EXPOS (MONITORING)	01 02 04	0244	CLASTO (IN VITRO)	01 02 04
0205	MUTA (IN VIVO)	01 02 04	(0220)	ECO/AQUA TOX	01 (02) 04	0245	CLASTO (ANIMAL)	01 02 04
0206	REPRO/TERATO (HUMAN)	01 02 04	0221	ENV. OCCC/REL/FATE	01 02 04	0246	CLASTO (HUMAN)	01 02 04
(0207)	REPRO/TERATO (ANIMAL)	(01) (02) 04	0222	EMER INCI OF ENV CONTAM	01 02 04	0247	DNA DAM/REPAIR	01 02 04
0208	NEURO (HUMAN)	01 02 04	0223	RESPONSE REQEST DELAY	01 02 04	0248	PROD/USE/PROC	01 02 04
(0209)	NEURO (ANIMAL)	01 (02) 04	0224	PROD/COMP/CHEM ID	01 02 04	0251	MSDS	01 02 04
0210	ACUTE TOX. (HUMAN)	01 02 04	0225	REPORTING RATIONALE	01 02 04	0299	OTHER	01 02 04
0211	CHR. TOX. (HUMAN)	01 02 04	0226	CONFIDENTIAL	01 02 04			
(0212)	ACUTE TOX. (ANIMAL)	01 (02) 04	0227	ALLERG (HUMAN)	01 02 04			
(0213)	SUB ACUTE TOX (ANIMAL)	01 (02) 04	0228	ALLERG (ANIMAL)	01 02 04			
~~0214~~	SUB CHRONIC TOX (ANIMAL)	01 (02) 04	0239	METAB/PHARMACO (ANIMAL)	01 02 04			
(0215)	CHRONIC TOX (ANIMAL)	01 (02) 04	0240	METAB/PHARMACO (HUMAN)	01 02 04			

TRIAGE DATA:	NON-CBI INVENTORY	ONGOING REVIEW	SPECIES	TOXICOLOGICAL CONCERN: NEUR	USE:	PRODUCTION:
	(YES)	YES (DROP/REFER)	(RAT)	(LOW)		
CAS SR	NO	NO (CONTINUE)	Rbt	MED		
	DETERMINE	REFER	Fish	HIGH		

Daphnid, SNAIL, Flatworm

[illegible] 5 male & 5 female rats were exposed by inhalation to 800, 400, 200, 100 or 0 ppm for 6/hrs/day, 5d/w, 11 exposures. FOB and neuropathology revealed no neurological effects at the highest dose tested (800 ppm.)

CECATS\TRIAGE TRACKING DBASE ENTRY FORM

CECATS DATA:
Submission # 8EHQ-0992-12046 SEQ. A

TYPE: (INT) SUPP FLWP

SUBMITTER NAME: Eastman Kodak

Company

INFORMATION REQUESTED: FLWP DATE:
0501 NO INFO REQUESTED
0502 INFO REQUESTED (TECH)
0503 INFO REQUESTED (VOL ACTIONS)
0504 INFO REQUESTED (REPORTING RATIONALE)

DISPOSITION:
(0539) REFER TO CHEMICAL SCREENING
(0578) CAP NOTICE

VOLUNTARY ACTIONS:
(0401) NO ACTION REPORTED
0402 STUDIES PLANNED/UNDERWAY
0403 NOTIFICATION OF WORKER PROTECTION
0404 LABEL/MSDS CHANGES
0405 PROCESS/HANDLING CHANGES
0406 APP/USE DISCONTINUED
0407 PRODUCTION DISCONTINUED
0408 CONFIDENTIAL

SUB. DATE: 09/28/92 OTS DATE: 11/30/92 CSRAD DATE: 01/26/92

CHEMICAL NAME:
ethylene glycol monopropyl ether
(EPO)

CASE
2807-30-9

INFORMATION TYPE:		P F C
0201	ONCO (HUMAN)	01 02 04
0202	ONCO (ANIMAL)	01 02 04
0203	CELL TRANS (IN VITRO)	01 02 04
0204	MUTA (IN VITRO)	01 02 04
0205	MUTA (IN VIVO)	01 02 04
0206	REPRO/TERATO (HUMAN)	01 02 04
(0207)	REPRO/TERATO (ANIMAL)	01 02 04
0208	NEURO (HUMAN)	01 02 04
(0209)	NEURO (ANIMAL)	01 02 04
0210	ACUTE TOX. (HUMAN)	01 02 04
0211	CHR. TOX. (HUMAN)	01 02 04
(0212)	ACUTE TOX. (ANIMAL)	01 02 04
(0213)	SUB ACUTE TOX (ANIMAL)	01 02 04
(0214)	SUB CHRONIC TOX (ANIMAL)	01 02 04
(0215)	CHRONIC TOX (ANIMAL)	01 02 04

INFORMATION TYPE:		P F C
0216	EPI/CLIN	01 02 04
0217	HUMAN EXPOS (PROD CONTAM)	01 02 04
0218	HUMAN EXPOS (ACCIDENTAL)	01 02 04
0219	HUMAN EXPOS (MONITORING)	01 02 04
(0220)	BCO/AQUA TOX	01 02 04
0221	ENV. OCCC/REL/FATE	01 02 04
0222	EMER INCI OF ENV CONTAM	01 02 04
0223	RESPONSE REQUST DELAY	01 02 04
0224	PROD/COMP/CHEM ID	01 02 04
0225	REPORTING RATIONALE	01 02 04
0226	CONFIDENTIAL	01 02 04
0227	ALLERG (HUMAN)	01 02 04
0228	ALLERG (ANIMAL)	01 02 04
0239	METAB/PHARMACO (ANIMAL)	01 02 04
0240	METAB/PHARMACO (HUMAN)	01 02 04

INFORMATION TYPE:		P F C
0241	IMMUNO (ANIMAL)	01 02 04
0242	IMMUNO (HUMAN)	01 02 04
(0243)	CHEM/PHYS PROP	01 02 04
0244	CLASTO (IN VITRO)	01 02 04
0245	CLASTO (ANIMAL)	01 02 04
0246	CLASTO (HUMAN)	01 02 04
0247	DNA DAM/REPAIR	01 02 04
0248	PROD/USE/PROC	01 02 04
0251	MSDS	01 02 04
0299	OTHER	01 02 04

STOX

TRIAGE DATE:	NON-CBI INVENTORY	ONGOING REVIEW	SPECIES	TOXICOLOGICAL CONCERN:	USE:	PRODUCTION:
	(YES)	YES (DROP/REFER)	RAT	LOW		
CAS SR	NO	NO (CONTINUE)	Rbt	[MED]		
	IN TRAININ	REFER	Fish	HIGH		

Daphnid, SNAIL, Flatworm

SUMMARY: Rats were exposed to EP at concentrations of 0, 100, 200 and 400 ppm for 6 hr/day, 5 day/week over 12 weeks. Exposure to 400 or 200 ppm produced decreases in red blood cell counts, hemoglobin concentration and hematocrit values. Secondary effects occurred in the liver, spleen and kidneys. There were increased hemosiderin deposits. The NOAEL was 100 ppm

Tox Concern

ID		
12046A	RTOX	L(RTOX)
	STOX	M(STOX)
	SBTOX	
Prod	ATOX	
L	SEN	
	NEUR	

COMMENT

DEVELOPMENTAL PROBE INHALATION STUDY IN RATS. DOSE LEVELS WERE 400, 800 AND 1600 PPM. AT 1600 PPM MATERNAL LETHALITY WAS OBSERVED. AT 400 AND 800 PPM THERE WAS MATERNAL AND FETO TOXICITY.

DEVELOPMENTAL INHALATION STUDY IN RATS. DOSE LEVELS WERE 100, 200, 300 AND 400 PPM. AT 200, 300 AND 400 PPM MATERNAL TOXICITY, AN INCREASE IN DELAYED OSSIFICATION AND 14TH RUDAMENTARY RIBS WAS NOTED. NO OTHER EFFECTS WERE NOTED.

DEVELOPMENTAL PROBE INHALATION STUDY IN RABBITS. DOSE LEVELS WERE 400, 800 AND 1000 PPM. AT 800 AND 1000 PPM THERE WAS MATERNAL TOXICITY BUT NO FETOTOXICITY.

DEVELOPMENTAL INHALATION STUDY IN RABBIT. DOSE LEVELS WERE 125, 250 AND 500 PPM. NO EFFECTS WERE NOTED AT 500 PPM.

STOX: RATS WERE EXPOSED TO EP AT CONCENTRATIONS OF 0, 100, 200 AND 400 PPM FOR 6 HRS/DAY, 5 DAYS/WEEK OVER 12 WEEKS. EXPOSURE TO 400 OR 200 PPM PRODUCED DECREASES IN RED BLOOD CELL COUNTS, HEMOGLOBIN, SPLEEN AND KIDNEYS, THESE WERE INCREASED HEMOSIDERIN DEPOSITS. THE NOAEL WAS 100 PPM.

CECATS\TRIAGE TRACKING DBASE ENTR M

CECATS DATA:
Submission # SEHQ-0992-12046 SEQ. A

TYPE: (INT) SUPP FLWP

SUBMITTER NAME: Eastman Kodak

Company

SUB. DATE: 09/28/92 OTS DATE: 9/30/92 CSRAD DATE: 01/26/92

INFORMATION REQUESTED: FLWP DATE:
0501 NO INFO REQUESTED
0502 INFO REQUESTED (TECH)
0503 INFO REQUESTED (VOL ACTIONS)
0504 INFO REQUESTED (REPORTING RATIONALE)

DISPOSITION:
(0639) REFER TO CHEMICAL SCREENING
(0675) CAP NOTICE

VOLUNTARY ACTIONS:
(0401) NO ACTION REPORTED
0402 STUDIES PLANNED/UNDERWAY
0403 NOTIFICATION OF WORKERS/USERS
0404 LABEL/MSDS CHANGES
0405 PROCESS/HANDLING CHANGES
0406 APP/USE DISCONTINUED
0407 PRODUCTION DISCONTINUED
0408 CONFIDENTIAL

CHEMICAL NAME: ethylene glycol monopropyl ether

CAS#: 2807-30-9

INFORMATION TYPE:		P F C
0201	ONCO (HUMAN)	01 02 04
0202	ONCO (ANIMAL)	01 02 04
0203	CELL TRANS (IN VITRO)	01 02 04
0204	MUTA (IN VITRO)	01 02 04
0205	MUTA (IN VIVO)	01 02 04
0206	REPRO/TERATO (HUMAN)	01 02 04
(0207)	REPRO/TERATO (ANIMAL)	01 02 04
0208	NEURO (HUMAN)	01 02 04
(0209)	NEURO (ANIMAL)	01 02 04
0210	ACUTE TOX. (HUMAN)	01 02 04
0211	CHR. TOX. (HUMAN)	01 02 04
(0212)	ACUTE TOX. (ANIMAL)	01 02 04
(0213)	SUB ACUTE TOX (ANIMAL)	01 02 04
(0214)	SUB CHRONIC TOX (ANIMAL)	01 02 04
(0215)	CHRONIC TOX (ANIMAL)	01 02 04

INFORMATION TYPE:		P F C
0216	EPI/CLIN	01 02 04
0217	HUMAN EXPOS (PROD CONTAM)	01 02 04
0218	HUMAN EXPOS (ACCIDENTAL)	01 02 04
0219	HUMAN EXPOS (MONITORING)	01 02 04
(0220)	ECO/AQUA TOX	01 02 04
0221	ENV. OCCC/REL/FATE	01 02 04
0222	EMER INCI OF ENV CONTAM	01 02 04
0223	RESPONSE REQEST DELAY	01 02 04
0224	PROD/COMP/CHEM ID	01 02 04
0225	REPORTING RATIONALE	01 02 04
0226	CONFIDENTIAL	01 02 04
0227	ALLERG (HUMAN)	01 02 04
0228	ALLERG (ANIMAL)	01 02 04
0239	METAB/PHARMACO (ANIMAL)	01 02 04
0240	METAB/PHARMACO (HUMAN)	01 02 04

INFORMATION TYPE:		P F C
0241	IMMUNO (ANIMAL)	01 02 04
0242	IMMUNO (HUMAN)	01 02 04
(0243)	CHEM/PHYS PROP	01 02 04
0244	CLASTO (IN VITRO)	01 02 04
0245	CLASTO (ANIMAL)	01 02 04
0246	CLASTO (HUMAN)	01 02 04
0247	DNA DAM/REPAIR	01 02 04
0248	PROD/USE/PROC	01 02 04
0251	MSDS	01 02 04
0299	OTHER	01 02 04

RTOX

TRIAGE DATA:	NON-CBI INVENTORY	ONGOING REVIEW	SPECIES	TOXICOLOGICAL CONCERN:	USE:	PRODUCTION:
	(YES)	YES (DROP/REFER)	RAT	(LOW) Mod.		
CAS SR	NO	NO (CONTINUE)	Rbt	MED		
	UNKNOWN	REVIEW	Fish	HIGH		

Daphnid, SNAIL, Flatworm

① Developmental Probe - Inhalation - Rat (400, 800, 1600 ppm) → maternal lethality - high dose 1600 ppm. 400 - 800 ppm maternal & feto toxicity.

② Developmental Probe Inhala. - Rabbit (400, 800, 1000 ppm) → maternal tox. at 800 - 1000 ppm No feto toxicity

③ Developmental Inhala. - Rabbit (125, 250, 500 ppm) → No effects at 500 ppm

④ Developmental Inhala. - Rat (100, 200, 300, 400 ppm) → maternal toxicity - 200 - 400 ppm 200-400 ppm ↑ delayed ossification + 14th rud. rib. No other effects

CECATS\TRIAGE TRACKING DBASE ENTRY FORM

CECATS DATA:
Submission # 8EHQ-0992-12046 SEQ. A

TYPE: (INT) SUPP FLWP

SUBMITTER NAME: Eastman Kodak

Company

SUB. DATE: 09/28/92 OTS DATE: R/30/92 CSRAD DATE: 01/26/92

INFORMATION REQUESTED: FLWP DATE:
0501 NO INFO REQUESTED
0502 INFO REQUESTED (TECH)
0503 INFO REQUESTED (VOL ACTIONS)
0504 INFO REQUESTED (REPORTING RATIONALE)

DISPOSITION:
(0539) REFER TO CHEMICAL SCREENING
(0578) CAP NOTICE

VOLUNTARY ACTIONS:
(0401) NO ACTION REPORTED
0402 STUDIES PLANNED/UNDERWAY
0403 NOTIFICATION OF WORKER PROTECTION
0404 LABEL/MSDS CHANGES
0405 PROCESS/HANDLING CHANGES
0406 APP/USE DISCONTINUED
0407 PRODUCTION DISCONTINUED
0408 CONFIDENTIAL

CHEMICAL NAME: ethylene glycol monopropyl ether

CAS#: 2807-30-9

INFORMATION TYPE:		P F C
0201	ONCO (HUMAN)	01 02 04
0202	ONCO (ANIMAL)	01 02 04
0203	CELL TRANS (IN VITRO)	01 02 04
0204	MUTA (IN VITRO)	01 02 04
0205	MUTA (IN VIVO)	01 02 04
0206	REPRO/TERATO (HUMAN)	01 02 04
(0207)	REPRO/TERATO (ANIMAL)	01 02 04
0208	NEURO (HUMAN)	01 02 04
(0209)	NEURO (ANIMAL)	01 02 04
0210	ACUTE TOX. (HUMAN)	01 02 04
0211	CHR. TOX. (HUMAN)	01 02 04
(0212)	ACUTE TOX. (ANIMAL)	01 02 04
(0213)	SUB ACUTE TOX (ANIMAL)	01 02 04
(0214)	SUB CHRONIC TOX (ANIMAL)	01 02 04
(0215)	CHRONIC TOX (ANIMAL)	01 02 04

INFORMATION TYPE:		P F C
0216	EPI/CLIN	01 02 04
0217	HUMAN EXPOS (PROD CONTAM)	01 02 04
0218	HUMAN EXPOS (ACCIDENTAL)	01 02 04
0219	HUMAN EXPOS (MONITORING)	01 02 04
(0220)	ECO/AQUA TOX	01 02 04
0221	ENV. OCCC/REL/FATE	01 02 04
0222	EMER INCI OF ENV CONTAM	01 02 04
0223	RESPONSE REQEST DELAY	01 02 04
0224	PROD/COMP/CHEM ID	01 02 04
0225	REPORTING RATIONALE	01 02 04
0226	CONFIDENTIAL	01 02 04
0227	ALLERG (HUMAN)	01 02 04
0228	ALLERG (ANIMAL)	01 02 04
0239	METAB/PHARMACO (ANIMAL)	01 02 04
0240	METAB/PHARMACO (HUMAN)	01 02 04

INFORMATION TYPE:		P F C
0241	IMMUNO (ANIMAL)	01 02 04
0242	IMMUNO (HUMAN)	01 02 04
(0243)	CHEM/PHYS PROP	01 02 04
0244	CLASTO (IN VITRO)	01 02 04
0245	CLASTO (ANIMAL)	01 02 04
0246	CLASTO (HUMAN)	01 02 04
0247	DNA DAM/REPAIR	01 02 04
0248	PROD/USE/PROC	01 02 04
0251	MSDS	01 02 04
0299	OTHER	01 02 04

ATOX, SBTOX, SEN

TRIAGE DATE:

CAS SR

NON-CBI INVENTORY
(YES)
NO
UNKNOWN

ONGOING REVIEW
YES (DROP/REFER)
NO (CONTINUE)
REJECT

SPECIES
RAT
Rbt
Fish
Daphnid, SNAIL, Flatworm

TOXICOLOGICAL CONCERN:
(LOW) SBTOX, ATOX (oral, dermal, inhalation)
(MED) SBTOX, ATOX (eye irr)
HIGH

USE:

PRODUCTION:

12046A

L

Acute oral toxicity in rats and mice is of low concern. The LD_{50} values were 3,200 mg/kg for rats and 2,262 mg/kg for mice.

L

Acute dermal toxicity and dermal irritation in guinea pigs are of low concern. A single application of the compound to the abdomen of guinea pigs was lethal at ≥5,000 mg/kg (converted from mL/kg assuming density is 1). The LD_{50} was 1,000-5,000 mg/kg. Skin irritation was slight. Repeated application over a ten-day period slightly exacerbated the skin irritation.

L

Dermal sensitization in guinea pigs is of low concern. The compound elicited a weak sensitization response in 1/5 guinea pigs.

L

Acute inhalation toxicity in rats is of low concern. Single 6-hour inhalation exposures to male rats at concentrations of 273-2,132 ppm were not lethal. Hemoglobin and hematocrit were reduced in all exposure groups. Gross hemolysis was also observed at ≥1,100 ppm.

L

Subacute inhalation toxicity in rats is of low concern. Six male rats were exposed to 100 ppm, 6 hours/day for a total of 12 exposures. There were no significant hematological, serum chemistry, or pathological effects.

M

Subacute inhalation toxicity in rats is of moderate concern. COBS CD rats (5/sex/group) were exposed to 0, 100, 200, 400, or 800 ppm, 6 hours/day, 5 days/week for a total of 11 exposures. Hemoglobinuria occurred at 400 and 800 ppm. These animals also exhibited hematological effects (increased white blood cell count, reticulocytes, mean corpuscular hemoglobin, and mean corpuscular volume and decreased red blood cell count) and altered red blood cell morphology (increased polychromasia, anisocytosis, macrocytosis, Howell-Jolly Bodies, and stomatocytes). Increased absolute and relative spleen weight occurred in 400-ppm males and 800-ppm males and females. Necropsy revealed minor splenic congestion, lymphoid hyperplasia, extramedullary hematopoiesis, and hemosiderin in males and females at 400 and 800 ppm.

L

Subacute oral toxicity in rats is of low concern. Rats received oral gavage doses of 0, 100, or 1,000 mg/kg/day (study duration not specified). Compound-related red cell changes occurred in the 1,000-mg/kg/day group, including poikilocytosis and anisocytosis. There were no pathological effects.

M

Eye irritation in rabbits is of moderate concern. Instillation of the compound into the conjunctival sac of six rabbits (3 washed, 3 unwashed) resulted in moderate to severe irritation. Slight to severe erythema and slight to moderate edema of the conjunctivae, iritis, and staining of the adnexa and cornea occurred. Varying degrees of corneal opacity were seen in all eyes. All eyes were normal by day 14. The effects were slightly less severe in the washed eyes.