PACIFIC BALLAST WATER TREATMENT PILOT PROJECT

BALLAST WATER TRANSFER STUDY

Technical Feasibility with Associated Capital Costs

Prepared for

Port of Seattle
Seattle, Washington

WILLIAM L. HURLEY, JR.
STATE OF WASHINGTON
19898
REGISTERED
PROFESSIONAL ENGINEER

23 JAN 02

EXPIRES 9/22/02

William L. Hurley, P.E.
Principal-in-Charge

[redacted]
Benjamin B. Ackers
Project Manager

File No. 01080
23 January 2002

GLOSTEN
The Glosten Associates, Incorporated

Consulting Engineers Serving The Marine Community
600 Mutual Life Building • 605 First Avenue
Seattle Washington 98104-2224
Phone: (206) 624-7850 • Fax: (206) 682-9117
E-mail: email@glosten.com

ACKNOWLEDGEMENTS

This report was prepared under the direction of the Port of Seattle, and in association with the Washington Department of Fish and Wildlife, under the Pacific Ballast Water Treatment Pilot Project.

The Glosten Associates and the Port of Seattle are grateful for the direct input and assistance of the Washington Department of Fish and Wildlife,

We would also like to thank the agents, owners, and operators of the *SS Tonsina*, *M/V Sunny Ocean*, *M/S Papendracht*, *APL Japan*, and *M/S United Spirit* for allowing us to visit their vessels and for providing valuable insight to the study of ballast water management.

TABLE OF CONTENTS

1. EXECUTIVE SUMMARY 1

2. INTRODUCTION 3

3. BACKGROUND 3

4. BALLAST TRANSFER CONCEPTS 4

4.1 TRANSFER ALTERNATIVES 4
4.2 ATTACHMENT ALTERNATIVES 7

5. VESSEL SURVEYS 10

6. TYPICAL BALLAST SYSTEM MODIFICATIONS FOR TRANSFER 11

6.1 CONTAINERSHIPS (SURVEY: *APL JAPAN*) 13
6.2 BREAK-BULK CARRIERS (SURVEY: *M/S PAPENDRACHT*) 16
6.3 TANKERS (SURVEY: *SS TONSIA*) 19
6.4 GRAIN SHIPS (SURVEY: *M/V SUNNY OCEAN*) 22
6.5 CAR CARRIERS (SURVEY: *M/S UNITED SPIRIT*) 24
6.6 CRUISE SHIPS 27

7. BALLAST TRANSFER COSTS 27

7.1 MODIFICATION CAPITAL COST ESTIMATES 27
7.2 DISCUSSION OF OPERATING COSTS 28

8. CONCLUSIONS 28

9. RECOMMENDATIONS FOR FUTURE STUDY 29

APPENDICES

A. Transfer System Modification Cost Estimates

REFERENCES

1. Glosten-Herbert, "Full-scale Design Studies of Ballast Water Treatment Systems," prepared for the Great Lakes Ballast Technology Demonstration Project, Northeast-Midwest Institute, and the Lake Carriers' Association, January 2002.

2. URS Corp. and Dames & Moore, "Feasibility of Onshore Ballast Water Treatment at California Ports," for the California Association of Port Authorities, September 2000.

3. Smith, Scott S., "Ballast Water Management Report and Recommendations to the Washington State 2002 Legislature," Fish Management Division, Aquatic Nuisance Species, Washington Department of Fish and Wildlife, December 2001.

PACIFIC BALLAST WATER TREATMENT PILOT PROJECT

BALLAST WATER TRANSFER STUDY

Technical Feasibility with Associated Capital Costs

1. EXECUTIVE SUMMARY

This study examines ballast water transfer as a means of limiting the possibility of the spread of invasive species through ships' ballast water. Ballast water transfer would allow vessels to either discharge ballast to a collection and treatment service, or to take on processed ballast that would be safe for discharge in ports without a transfer service. Transfer systems considered include fixed, shoreside facilities and mobile, truck or barge-mounted services. Two means of connecting to ships' ballast systems are considered: external attachments to existing hull penetrations and connection to new universal connections installed above a vessel's main deck.

This study concentrates on the technical feasibility of ballast transfer by examining the vessel modifications required for a transfer service to interface with a vessel's ballast system. To understand the range of technical challenges posed by ballast transfer, six different vessel types that call on Puget Sound ports were examined. These include containerships, grain ships, break-bulk carriers, tankers, car carriers, and cruise ships. Five vessel surveys were conducted to identify the extent and capital costs of modifications required to accommodate ballast transfer. The modification costs calculated for each surveyed vessel type, shown below, assume that new universal deck connections are installed, and that ballast systems are modified to allow ballast transfer with minimal disruption to current operations.

Transfer Modification Capital Costs

Type	Modification Cost	Ballast Capacity MT
Tanker	$1,892,100	75,850
Grain Ship	$106,700	35,000
Break-bulk	$303,400	26,850
Container	$438,400	19,670
Car Carrier	$160,700	6,600

While this study demonstrates the technical feasibility of ballast transfer, ultimately, economic feasibility must be demonstrated before such a system is considered viable.

The key findings of the Ballast Water Transfer Study are:

- The ability for vessels to offload ballast to a transfer service through new universal deck connections is technically feasible.
- The ability for vessels to load ballast from a transfer service is technically feasible, but requires installation of new universal deck connections.

- The ability for vessels to offload ballast to a transfer service through an existing hull penetration and an external attachment shows promise as a feasible alternative to installing new, universal deck connections for ballast transfer.

- Increasing the required capability of a ballast transfer system, in turn increases the costs to modify existing systems. In some cases, particularly with vessels with small ballast capacities, minimal, if any, modifications may be required for transfer. However, as demand for higher capacity and greater flexibility increase, modification costs increase accordingly.

To demonstrate economic feasibility, further study is recommended on the following two topics:

- To reduce the investment cost to vessel owners, external attachment technology that connects a transfer service to existing hull penetrations is under development and may warrant further study. If such a system were proved practical, it is possible vessels could discharge ballast to a collection service with minimal vessel modifications, and therefore, minimal capital costs

- The operating costs of transfer services must be considered. While costs associated with fixed, shoreside service have been investigated, mobile systems have not been well studied. Since the transfer service is a recurring cost to the industry, it is a critical component to the determination of the economic feasibility of ballast water transfer.

2. INTRODUCTION

The potential introduction of invasive aquatic species from ships' ballast water has been identified by the international community as a threat to marine ecosystems in ports throughout the world. To combat this potential problem, the marine industry, in cooperation with regulatory bodies and government agencies, is working to improve ballast management to limit the contamination of local waters by non-native ballast.

A proposed method to reduce the likelihood of introduction of non-indigenous invasive species through ballast water is to provide ship operators a means to transfer ballast to a collection and treatment service, rather than directly discharging it into local waters. Vessels may also be able to take on ballast water that is safe for discharge in a port area that does not provide collection service. Recognizing that the concept of ballast transfer has undergone limited study, the Port of Seattle, in cooperation with the Washington Department of Fish and Wildlife, under the Pacific Ballast Water Treatment Pilot Project, has provided funds for a study to determine the technical feasibility and capital costs to vessel operators of ballast water transfer.

This Ballast Water Transfer Study report presents the following:

- Three ballast transfer alternatives are discussed: fixed shoreside, mobile truck-mounted, and mobile barge-mounted services.

- Two alternatives are discussed for connecting ships' ballast systems to collection services: external attachments to existing hull penetrations and universal, above-deck connections.

- Discussion of modifications and retrofits required for ballast transfer on six typical vessel types that call on Puget Sound. Concept designs and cost estimates for modifications are presented for five vessels surveyed for the study.

- Conclusions regarding the feasibility and capital costs of modifying vessels for ballast transfer.

These can be used to evaluate the economic feasibility of ballast transfer.

3. BACKGROUND

Currently, the primary means of reducing the content of invasive species in non-native ballast water is for vessels to practice ballast exchange. The most effective means of ballast exchange is accomplished by completely emptying and refilling ballast tanks while in the open ocean. This procedure removes ballast water taken on in the vessel's origin port and replaces it with clean, open-ocean water.

Often, however, it is not practical for vessels to completely empty ballast tanks while at sea, because doing so may jeopardize the stability and structural integrity of the vessel. Bow slamming and propeller immersion can also occur. Therefore, to avoid these safety risks, some vessels practice flow-through exchange. With flow-through exchanges, ballast tanks are not emptied. Instead, they are constantly filled with ocean water, while being allowed to overflow. The intent of this method is to displace

the ballast taken on in the port of origin with open-ocean water. However, the effectiveness of flow-through exchange is heavily dependent on the configuration of the tank and the locations of the fill and overflow pipes. Therefore, flow-through is generally considered less effective than complete exchange.

Many, but not all, vessel operators practice complete and flow-through open-ocean exchange. However, as governments define more specific limits on the discharge of non-native ballast water, exchange may fail to satisfy new regulations. This, combined with the fact that, for safety reasons, some vessel operators are not willing to practice complete exchange, has led the government and industry to search for alternative methods to improve ballast water management.

One leading alternative to ballast exchange is onboard treatment. Onboard treatment systems use chemicals or machinery that attempt to kill the species contained in ballast before being discharged to local waters, significantly reducing contamination by live organisms. Reference 1 presents feasibility studies and cost estimates for onboard treatment installations on a containership and an oil tanker. Studies are also currently underway to determine the most effective means of onboard treatment, and several vessels have already or currently plan to install onboard systems. However, until national and international standards are agreed to, several stakeholders are not convinced that onboard treatment is the most economic interim solution for all operators.

Ballast water transfer is seen as a potential alternative to both open-ocean exchange and onboard treatment; however, this concept has received only limited study. Reference 2, a 2000 report prepared by URS Corp./Dames & Moore for the California Association of Port Authorities, investigates the feasibility and costs of terminals collecting ballast from vessels calling on 11 California ports. However, it does not discuss alternative *ballast transfer methods* nor does it provide a detailed discussion or estimate of capital costs for vessel modifications, on a range of vessel types, required to support transfer operations. This study expands the general understanding of ballast water transfer by examining these issues.

A key factor in determining mitigation measures to address species invasion is quantifying the volume of untreated or exchanged ballast water discharged to local waters. To accomplish this, several jurisdictions have implemented ballast discharge reporting programs. These data are compiled by several regional marine exchanges and the Smithsonian Environmental Research Center (SERC). Unfortunately, due to problems with the reporting procedures, the data that has so far been compiled is of questionable quality. A discussion of ballast water reporting in Washington State is presented in Reference 3, which includes summary values of ballast discharge reported in Washington ports and recommendations for improved reporting procedures and requirements.

4. BALLAST TRANSFER CONCEPTS

4.1 TRANSFER ALTERNATIVES

For vessels without on-board treatment systems and which were unable to conduct satisfactory exchange, a means must be provided to allow them to discharge

untreated ballast. Therefore, the ballast on board the vessel must be discharged to a collection and treatment service. This service would attach hose to the vessel's ballast system, collect the ballast, and treat it before it is discharged to local waters. Such a service could either be provided at a shoreside facility or operate on truck or barge-mounted mobile platforms.

Fixed Shoreside Transfer

Fixed, shoreside ballast transfer systems offer the greatest potential for ships to discharge ballast with minimal impact on existing operations. Fixed systems could be installed at existing cargo terminals with few, if any, limits on transfer rates. Therefore, these fixed systems could be sized large enough to allow any expected vessel to discharge its ballast load within the time it takes to complete cargo operations. An additional benefit to a fixed shoreside service is that connections to the vessel can be integrated with connections to the cargo system, allowing terminal personnel to make the required connections with minimal impact on cargo operations.

Fixed treatment systems at existing cargo terminals would likely have lower operating costs when compared to alternative mobile treatment systems. Costs would be lower, because the fixed systems can be operated by existing terminal personnel and equipment would be installed on existing terminal property. Therefore, operating costs would chiefly consist of equipment operations and maintenance, water and contaminate disposal fees, and losses resulting from effects on existing operations. A more detailed discussion of shoreside system costs can be found in Reference 2.

A fixed ballast transfer system also allows the opportunity to provide "clean" ballast water to vessels. With this system, a vessel could simultaneously discharge cargo while taking on processed ballast that can be discharged in the destination port without exchange or treatment.

A disadvantage of fixed ballast transfer systems is that they would require significant capital investment to add the necessary piping, collection, and treatment systems to existing terminal facilities. If, because of excessive cost or space limitations, it is not found practical to install ballast collection systems at cargo terminals, fixed systems could also be installed at special-purpose ballast transfer terminals. This solution, however, would add delays to current operations, since vessels would be required to divert to an additional terminal each time it wishes to discharge untreated ballast or take on clean ballast.

Fixed, shoreside transfer systems would likely be best suited to high-capacity applications, such as at terminals for tankers and bulk carriers. For vessels with large-capacity ballast systems, it is unlikely that operations can be modified to avoid discharge of ballast. Therefore, consistently large amounts of ballast will be discharged regularly, requiring a transfer system with a high transfer rate to limit operational delays. These operations would best benefit from the high capacity and relatively low operating costs of a fixed system.

Mobile Truck-Mounted Shoreside Transfer

A truck-mounted transfer system offers the advantages of mobility and will likely require few, if any, modifications or capital investments to existing terminal facilities. With the mobility of a truck-mounted system, equipment need not be located at every cargo terminal. Instead, the system could be moved to terminals as needed. Similar systems, for collection and treatment of oily bilge water, are already in successful operation. However, they accommodate far smaller volumes of bilge water than would typically be required for ballast water.

Disadvantages of a truck-mounted system include size limits, little, if any, holding tank capacity, and the need for additional operating personnel. Dimensional and weight limits may constrain the transfer rate to levels acceptable only for smaller vessels. For larger vessels, the low transfer rates may cause operations delays. Also, the lack of holding tank capacity will prevent the truck-mounted systems from providing clean ballast to vessels, unless terminal modifications are made to provide a source of clean ballast water to be pumped by the mobile system. Unlike fixed terminal operations, where terminal personnel would operate the transfer system, additional personnel would be required to operate the mobile system.

The disadvantages of a truck-mounted system will likely result in higher operating costs when compared with a fixed system. These higher costs include the need for additional personnel and the costs associated with fueling and maintaining a vehicle-mounted system.

Truck-mounted transfer systems would likely be best suited for servicing vessels with small discharge volumes. These vessels may call on terminals where the cost of installing a fixed transfer system cannot be justified, because the vessels that call on it are either equipped with onboard treatment systems or do not generally need to discharge ballast. In these cases, it may be practical to bring in a truck-mounted transfer system to provide occasional service.

Mobile Barge-Mounted Transfer

A barge-mounted, mobile treatment system has the potential for large transfer rates, acceptable for larger vessels, and greater mobility than truck-mounted systems. Barge-mounted systems would have the ability to collect ballast while ships are either at anchor or at a cargo terminal. Barges have adequate deck area to mount large pumps, treatment equipment, hose-handling gear, and generators required to support high-capacity transfer operations–giving barges the potential to support transfer rates equal to shoreside facilities.

While a barge-mounted system offers the potential for greater transfer rates and better mobility when compared with a truck-mounted system, it shares two of the same disadvantages: the barge-mounted system will require additional operational personnel when compared with fixed, terminal systems; and barges will likely not have the tank capacity required to provide clean ballast to large vessels. An additional disadvantage to barge-mounted systems is that they may not be able to be used while vessels are performing cargo operations–either because there is limited room for the barge at the terminal or because vessel operators, particularly on

tankers, may not want to jeopardize safety by performing simultaneous cargo operations and ballast transfer to a barge.

Barge-mounted systems would have both higher acquisition and operating costs than truck-mounted systems. Additional acquisition costs result from the cost of the barge and hose handling equipment. Also, a barge will have to carry it's own power-generating equipment, while a truck may be able to use terminal-provided power. Higher operating costs result from additional personnel, higher transportation costs, no terminal assistance for hose handling, and a potentially less efficient power supply.

Barge-mounted systems would likely be best suited to provide service to vessels which do not call on terminals with fixed, shoreside-transfer systems, and who's ballast capacities exceed the rates at which truck-mounted systems become impractical. They could also be very useful to vessels who's current operations include time spent at anchor or to vessels that must deballast to reduce draft before entering shallow ports.

4.2 ATTACHMENT ALTERNATIVES

In order to accomplish ballast water transfer, a transfer system must, in some way, connect to the ballast system aboard the vessel. This can be accomplished by two basic means: via a direct connection to an existing hull penetration, or a universal deck connection.

Existing Hull Penetration Connection

Most ships are fitted with hull penetrations through which ballast is pumped in from and discharged to surrounding sea water. Ballast water is drawn in from a penetration, called a sea chest, which is usually a screen-covered, box-shaped penetration near or at the bottom of the hull in the engine room. Vessels often have more than one sea chest. A minimum of two are usually provided for separate high and low suction points. In these cases, only one sea chest is used at a time, and it usually supplies sea water for ballast, fire-fighting systems, sea water cooling systems, and production of potable water. Some vessels have more than two sea chests, sometimes providing a sea chest dedicated to the ballast and fire-fighting systems.

To discharge ballast, vessels usually have dedicated overboard discharges. These consist of a pipe cut to the shape of and penetrating the side of the hull, either above or below the waterline, and are fitted with check valves to ensure that seawater cannot be taken onboard through the discharge. On vessels with a sea chest dedicated to the ballast system, discharge can sometimes take place back through the sea chest, in lieu of a separate overboard discharge. However, on most vessels, ballast cannot be discharged through the sea chest, because the sea chest must supply sea water to other systems.

The most compelling advantage to connecting a ballast transfer system to an existing hull penetration, is that it may require few, if any, modifications to be made to the vessel, therefore requiring minimal capital investment on behalf of the vessel owner. Using such a connection, the vessel's existing systems could discharge ballast to a

collection service at rates approaching its current overboard discharge rates. With the assistance of an addition pump providing suction from the collection service, discharge rates may even be increased without modifying existing onboard systems.

Unfortunately, attaching and staying connected to existing hull penetrations presents a significant technical challenge. The variability in shape, location, and size of penetrations on various vessels makes it difficult to design an attachment device that conforms to a range configurations. In many cases, when the penetrations are submerged, it may be necessary to employ divers to attach the transfer hose. Also, once attached, it may be difficult to hold the connection in place because of the large separation forces that may result from positive pressures at the connection. The challenge is compounded by the possibility that during the ballast transfer the penetration may shift above and below the waterline.

Attachment problems are more difficult to overcome for connections to sea chests than to overboard discharges, because sea chests are often larger and have more complex shapes. Without modifications, it is not possible for most vessels to discharge through their sea chests. Therefore, it is more likely that external connections will be made to overboard discharges to transfer untreated ballast off the vessel. However, overboard discharges are fitted with check valves to prevent back-flow into the ballast systems. These check valves would have to be removed to allow for the vessel to receive clean ballast, which violates regulatory requirements. Without this modification, clean ballast could only be received by a connection to the sea chest.

Connecting to hull penetrations is also complicated by the fact that many vessels have multiple overboard discharge ports, and they are often located inconveniently. Some vessel's have segregated ballast systems. In these cases, ballast is discharged to separate overboard discharges. Therefore, the ballast transfer attachment may have to be relocated for complete transfer, delaying operations. In uncommon cases in which a vessel has overboard discharges for individual tanks, transferring ballast through only one discharge may risk the structural integrity of the vessel, as well as subject it to undesirable heel and trim angles. Also, many vessels have discharge penetrations on only one side of the vessel. So, in cases when the vessel must dock with its discharges on the opposite side of the transfer system, the vessel will not be able to simultaneously transfer ballast and perform cargo operations.

To overcome some of these problems, it may be necessary to modify existing systems. If it is critical that a vessel's current discharge rate be maintained, in some cases it may also be necessary to increase the pipe size in the system. To allow for a transfer connection on both sides of the vessel, it may be necessary to add symmetric hull penetrations. To avoid relocating the transfer attachment during transfer operations, it may be necessary to integrate currently segregated ballast system discharges. Also, to ensure a secure attachment to the hull penetration, it may be necessary to permanently fix an anchoring device to the vessel's hull. All of these solutions represent potential capital investments on behalf of the vessel owner, which may, on some ships, offset the advantages of using an external connection device. On other ships though, capital costs may be small.

Several alternatives have been considered for the successful design of an external attachment device. Unfortunately, these designs have been developed by private

industry, and are being treated in a proprietary manner. Therefore, they cannot be described here, nor can their ultimate feasibility be assured. However, we believe some of these designs have potential and warrant further investigation.

Universal Deck Connection

To overcome the difficulties of connecting to an external hull penetration, an alternative solution is to provide universal connections to the ballast system, located above the main deck of the vessel. Universal, bolted-flange connections are used to provide standard hose connections for bunker stations and cargo manifolds and could be easily applied to a ballast transfer system. Locating ballast connections on bunkering flats, the main deck, or above the main deck allows for convenient access by the ship's crew and terminal personnel. The connections can be located on both sides of the vessel for easy access regardless of docking orientation. And, they can be located in a convenient longitudinal location, such as near a fuel bunkering station or a cargo manifold, near existing pipe runs and hose-handling gear.

Retrofitting universal deck connections offers greater operational flexibility than using external connection devices. With universal connections, the vessel can interface with any transfer system–shoreside or barge mounted–with little difficulty. They can be configured, with modifications to the existing ballast system, to both discharge untreated and take on clean ballast water through a single connection. And, modifications can allow for larger transfer rates than existing systems, if needed to avoid delays in current operations.

The major disadvantage to a universal deck connection is the need for significant modifications to the vessel to exploit their benefits. Retrofitting vessels with deck connections requires that piping be run from ballast pumps in machinery spaces up to the main deck and out to the sides. Since existing overboard discharges are located below the main deck, for ship's existing pumps to discharge ballast though deck connections, they will have to overcome an additional static head. This may require more powerful pumps.

Selection of Universal Deck Connection for Cost Estimation

A major purpose of this study is to estimate the capital costs to vessel owners of implementing a ballast transfer operation. This capital cost is generally proportional to the extent of vessel modifications required to support ballast transfer. Discharging ballast through an existing hull penetration to an external connection device requires the fewest vessel modifications. If this alternative has a negligible impact on current operations, it is possible it would require no vessel modifications at all. However, to the extent vessel modifications are required to avoid unacceptable schedule delays, capital costs will increase. Universal deck connections offer the greatest transfer capabilities, would have the smallest impact on current schedules, and would require the most modifications. Therefore, in general, they will cost the most to install.

Under the scope of this study, it is not practical to examine all of the tradeoffs between varying levels of transfer system capability and capital cost. Instead, the study quantifies the capital cost required to provide the maximum capability in a ballast transfer system, to represent a maximum capital investment. Therefore, the

remainder of this report discusses the feasibility and costs of retrofitting vessels with universal deck connections to transfer ballast. In addition, it assumes existing ballast systems will be modified to minimize schedule delays imposed by transfer operations.

5. VESSEL SURVEYS

Vessel surveys were conducted to achieve the following objectives:

- To determine the feasibility of ballast transfer on a range of vessel types.
- To attempt to identify the range of ballast system configurations.
- To develop concept designs of universal deck connection retrofits for several specific vessels.
- To assess needs for ballast system modifications (e.g. increasing discharge rate, pipe sizes, and pump sizes) to minimize schedule delays imposed by ballast transfer operations.
- To talk directly to vessel operators about their vessel's ballast operations, to review with them design concepts for universal deck connection retrofits, and to seek their opinions on ballast transfer operations.

This study considers the primary vessel types that call on Puget Sound ports. These include:

- Containerships
- Grain Ships[1]
- Break-bulk Ships[2]
- Tankers
- Car Carriers
- Cruise Ships

Our intent was to survey at least one example of each vessel type. However, this study was conducted during the off season for cruise lines in Puget Sound. Therefore, it was not possible to survey a cruise ship for the study. Information presented on the feasibility of modifying cruise ships for ballast transfer was acquired through correspondence with cruise ship owners and operators and our previous experience with cruise ship designs. Surveys were conducted on each of the other five types of vessels.

Specific vessels were selected for survey based on a number of factors. Acknowledging that among each vessel type, there are numerous design variations, our intent was to select vessels who's ballast systems we felt best represented other vessels of its type. We also attempted to survey vessel's that had ballast systems with capacities on the

---

[1] Grain ships are representative of a larger category of vessels–bulk carriers–that carry non-containerized commodities such as coal and ore.

[2] Break-bulk ships carry a variety of containerized or bundled cargo, such as metal, logs, lumber, building materials, and refrigerated goods.

upper end of vessels that call on Puget Sound to attempt to establish an upper-bound on retrofitting costs. These selections were also subject to scheduling constraints and permission from operators to conduct surveys. Characteristics of the five surveyed vessels are presented in Table 5-1.

Table 5-1: Surveyed Vessel Characteristics

Vessel	Type	Year Built	Length	Dead-weight	Ballast Capacity	
			ft	Long Tons	Cubic Meters	Gallons
SS Tonsina	Tanker	1977	869	123,000	~74,000	~20,160,000
M/V Sunny Ocean	Grain Ship	1994	735	67,550	34,140	9,018,190
M/S Papendracht	Break-bulk	1989	644	40,300	26,200	6,922,740
APL Japan	Container	1995	906	65,480	19,190	5,069,120
M/S United Spirit	Car Carrier	2000	570	13,847	6,440	1,701,180

During the vessel surveys, we questioned the vessel operators about the range of ballast volumes they discharge while in various ports. We were often told by agents and operators that their vessels never discharge ballast in Puget Sound. However, we found that almost every vessel surveyed discharged ballast at some point while they were in port, usually for trim and list control, while loading and off-loading cargo.

When we questioned the operators about this practice, they did not seem to perceive such operations as ballast discharge, because of two common misconceptions:

1. The operators felt they were only “transferring” ballast from one tank to another for trim and heel control. In fact, most vessels are not capable of direct transfer between tanks to control trim. Instead, they must discharge ballast from one tank, and fill another with sea water. While this “transfer” may not result in a net change in onboard ballast, it does, in fact, require ballast discharge.

2. The operators felt that pumping off water taken on while in port is not discharge of invasive species. However, this misconception fails to recognize the potential that the local water, while sitting in a tank, will mix with residual, invasive biological matter.

This study considers every event in which ballast is pumped off of the vessel as a discharge, regardless of how it is perceived by operators. In the future, as the industry improves monitoring and treatment of ballast discharge, it is important that all parties understand that each time water is moved from a ballast tank to local port waters, there is a potential for invasive species discharge.

6. TYPICAL BALLAST SYSTEM MODIFICATIONS FOR TRANSFER

The conclusions that follow, regarding the ballast system configurations and the modifications required to configure them for ballast transfer, are drawn primarily from the vessel surveys conducted for this study. Of the vessels that were surveyed, no specific characteristics stood out which lead us to believe that systems on vessels of

the same type would be generally dissimilar. However, every vessel is essentially a unique design which may incorporate features not encountered during this study. Ballast system designs on other vessels could vary substantially, but we suspect large differences from the data presented here will be exceptions to the norm.

Our primary objective when assessing the need for modifications to a vessel's ballast system was to allow for ballast transfer with minimal disruption to current operations. Many vessels, when they arrive at a port empty of cargo and full of ballast, begin discharging ballast prior to arrival at the cargo terminal, because their system's do not have the capacity to discharge all necessary ballast before the completion of cargo loading. If these vessels were to transfer their ballast to a collection service with their current systems, they could not completely deballast during cargo operations, and would therefore be delayed by the ballast transfer operation. To avoid these delays, when necessary, this report assumes that a vessel's existing ballast system will be augmented to be capable of transferring a typical ballast load to a collection service during the time constraints of typical cargo operations.

To further avoid delays in operations, all ballast system modifications considered here include the following features:

- **Port and starboard ballast stations with universal, bolted-flange connections located at or above the main deck.** In general, these are located adjacent to existing fuel bunkering stations and hose-handling equipment. However, in the case of the tanker, they have been located at the cargo manifold.

- **Ballast pump capacity to overcome the static head from the pump discharge to the ballast connection.** In all cases discussed here, except the *SS Tonsina*, existing pumps were adequate to provide this capability, while operated at a reduced rate. Once the existing pumps prime the transfer line to the deck connection, it is assumed that a pump incorporated in the transfer service's collection system will provide adequate suction to boost the transfer rate to the maximum capacity of the vessel's ballast pump(s).[3]

- **All new piping is sized for a maximum flow velocity of nine feet per second at maximum transfer rates.** Except, the *SS Tonsina*, which employs a new discharge pump, has discharge piping sized at 12 feet per second. Nine feet per second is a typical, conservative upper-bound on flow velocity to limit pressure drop and internal pipe erosion.

- **All new systems are capable of discharging onboard ballast as well as taking on "clean" ballast for discharge in ports without collection services.**

---

[3] We have assumed a "booster pump" is provided by the collection service, because it would not be practical to install ballast pumps on ships to overcome the pressure losses imposed by the collection system's piping and fittings. Such pumps would operate at unacceptable levels of efficiency when used to take on or transfer ballast while disconnected from a transfer service.

6.1 CONTAINERSHIPS (SURVEY: *APL JAPAN*)

General

Containerships calling on Puget Sound ports generally arrive laden with nearly full cargo loads and carry only partial ballast loads to control list and trim. While in Puget Sound, they usually discharge ballast to adjust trim during cargo operations. In some cases, fully-loaded containerships must take on additional ballast while in port to fit underneath container cranes. As cargo is removed, this ballast is discharged back to the port. In ports where containerships depart with light cargo loads, large amounts of ballast are taken on to maintain stability and structural integrity.

Our survey of the *APL Japan*, a 906', C-11 class, motor-driven containership, was conducted at Seattle Terminal 5 on 9 November 2001. *Japan* operates on a 42-day round trip from San Pedro, California to Seattle, Yokohama, Kaohsiung, Hong Kong, Yantian, and Singapore. The vessel's 28 ballast tanks are used continuously to control trim and draft with varying cargo loads. Typically, ballast on board amounts to only 25% of her 5,069,120-gallon capacity. From discussions with the officers, we were told *Japan's* maximum in-port discharge would be 12.5% of her total ballast capacity, or 633,640 gallons, which must be discharged in less than four hours to avoid schedule delays.

Current Ballast System

The ballast system aboard the *APL Japan* consists of two 4300-gpm ballast pumps that service 28 wing and deep tanks. Two main headers (port and starboard) run the length of the ship to the tanks forward of the engineroom. An additional header runs to the aft wing tanks and stern tube.

Tanks are flooded through port and starboard 27" sea chests. Deballasting is accomplished through one 32" starboard overboard. The firemain is used to drive a ballast stripping eductor, which discharges to the same starboard overboard, to remove any residual water left in the tanks.

For *Japan* to discharge all ballast to a collection service, without modifications to her ballast system, a single connection would have to made on the starboard side.

Ballast Modifications

To exchange ballast water with a transfer service, new ballast transfer stations that tie into the existing overboard shall be installed. The new piping will connect to the existing discharge header and run vertically to the new port and starboard ballast water transfer connections.

Various fittings, such as tees and elbows, will need to be installed to route piping. In way of new piping, existing systems (such as vent ducting, wireways and smaller piping) will be relocated or modified. New remotely-operated butterfly valves will be installed in the engineroom and at each ballast transfer station.

Using an existing 4300-gpm ballast pump will be more than adequate to discharge the required 633,640 gallons in less than four hours. To accommodate the pump's maximum discharge rate, all new transfer piping will be 14" to maintain the flow velocity at nine feet per second. A diagram of the required ballast system modifications is shown in Figure 6-1.

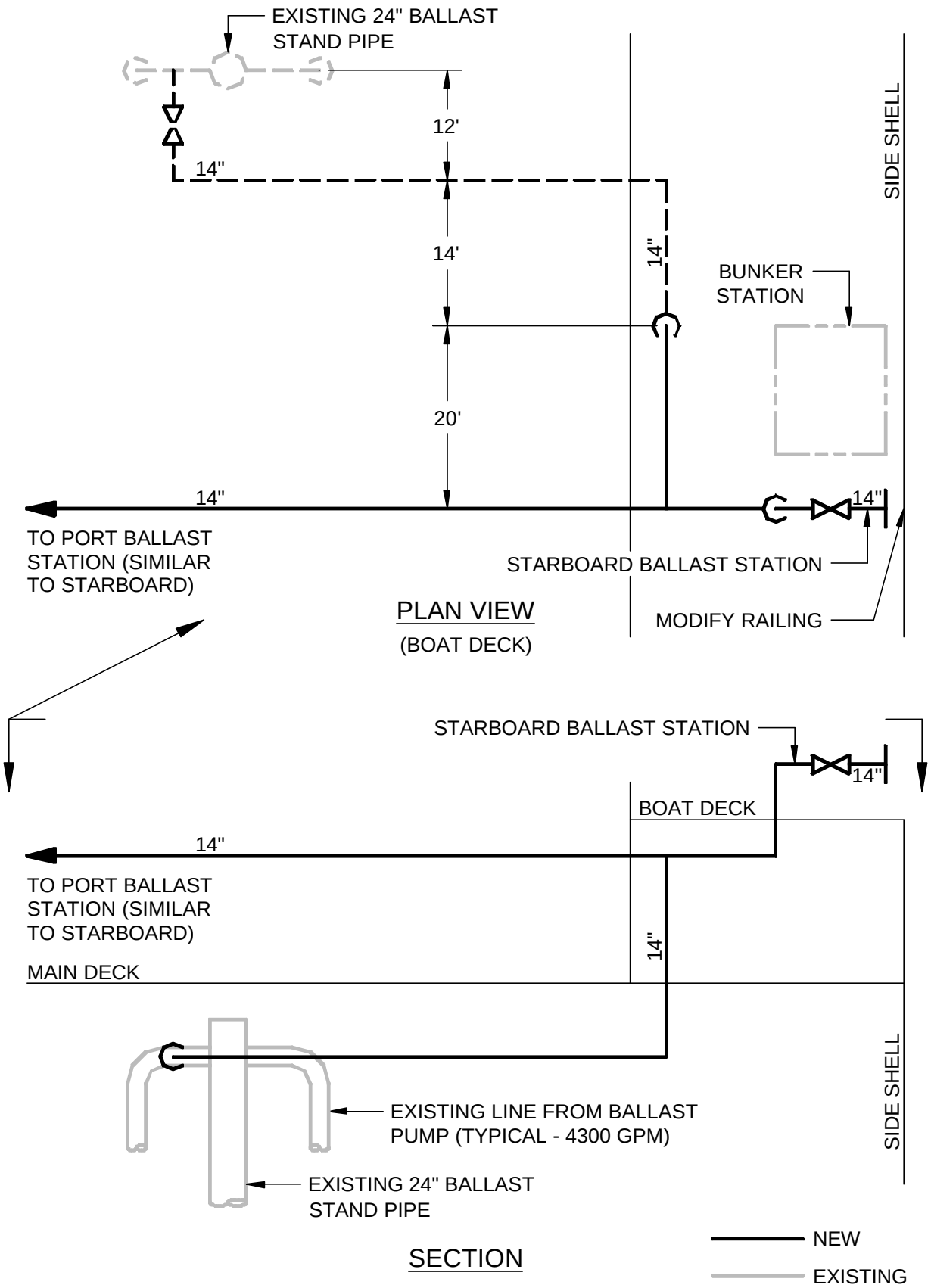

Figure 6-1: *APL Japan* Ballast System Modifications

6.2 BREAK-BULK CARRIERS (SURVEY: *M/S PAPENDRACHT*)

General

Break-bulk ships carry a wide variety of cargo, which very vastly in density and packaging. Therefore, these vessels rarely have "typical" voyages. In fact, their ability to carry multiple types of cargo with varying loads is one of their principal design features. As a result, their ballasting practice varies significantly from voyage to voyage. One feature of break-bulk vessels that may make for convenient ballast transfer operations is that they typically spend relatively long amounts of time in cargo operations, because loading and off-loading cargo is a cumbersome, labor-intensive process. Therefore, existing ballast systems will likely have the capacity to completely transfer ballast during cargo operations.

Our survey of the *M/S Papendracht*, a 644', motor-powered, break-bulk carrier that operates on round-trips from the Far East to Puget Sound, was conducted at Seattle Terminal 37 on 6 December 2001. On the day of the survey, the vessel had arrived fully laden with cargo, and empty of ballast. So no ballast was discharged during this port call. However, when the vessel arrives empty of cargo, it must typically discharge around 85% of its ballast capacity of 6,922,740 gallons.

Current Ballast System

The ballast system aboard the *Papendracht* consists of two 6650-gpm ballast pumps. 22 ballast tanks can either be gravity filled or pumped full from either the port or starboard sea chest. One 20" main header runs forward, connecting all branch lines from the deep tanks. The aft peak is also connected to this 20" header with an additional branch line. Upper side tanks are connected by headers that run forward on both port and starboard sides. These headers are connected with the deep tank header at a manifold in the engineroom. The forepeak and aftpeak tanks are not connected to the ship's main ballast system. They are filled and emptied with an 819-gpm general service bilge pump

There are two main 20" ballast discharges, located on the port and starboard sides of the vessel and a single, starboard, overboard discharge for the forepeak and aftpeak tanks. Discharging ballast starts either at the dock or at arrival and typically takes 15 hours.

For *Papendracht* to transfer all ballast to a collection service without modifications to her ballast system, connections would have to be made to two overboard discharges: the main discharge, located both port and starboard sides, and the forepeak and aftpeak discharge, located on the starboard side.

Ballast System Modifications

To exchange ballast water with a transfer service, new piping for two new ballast transfer stations shall be installed. The new piping will tie into the two existing 20" overboard piping runs and proceed vertically through the engineroom, the third deck, and then penetrate the main deck. The piping will then run outboard to new ballast water transfer stations. Also, to transfer ballast from the forepeak and the aftpeak, a

new 6” line from the discharge of the general service pump to the discharge of the ballast system will be installed.

Various fittings, such as tees and elbows, will need to be installed to route piping. In way of this piping, existing systems (such as vent ducting, wire ways and smaller piping) will be relocated or modified. New remotely-operated butterfly valves will be installed in the engineroom and at each ballast transfer station.

It should be noted that the general service line is primed using a bilge eductor, powered by the firemain, and some ballast water will be discharged through the eductor overboard. The majority of water discharged will be seawater from the firemain, and once the line is primed, the eductor will be shutdown. The total ballast water pumped overboard is minimal.

A typical port call to offload a full cargo load lasts about 19 hours. Using the existing pumps to discharge a full ballast load to a collection service would take approximately 18 hours at full ballast capacity. A typical 85% ballast load could be transferred in only 15 hours. Therefore, the existing pump rates are adequate to accomplish transfer at the cargo terminal without schedule delays. To accommodate the pump’s maximum discharge rate, all new transfer piping will be 17” to maintain the flow velocity at nine feet per second. A diagram of the required ballast system modifications is shown in Figure 6-2.

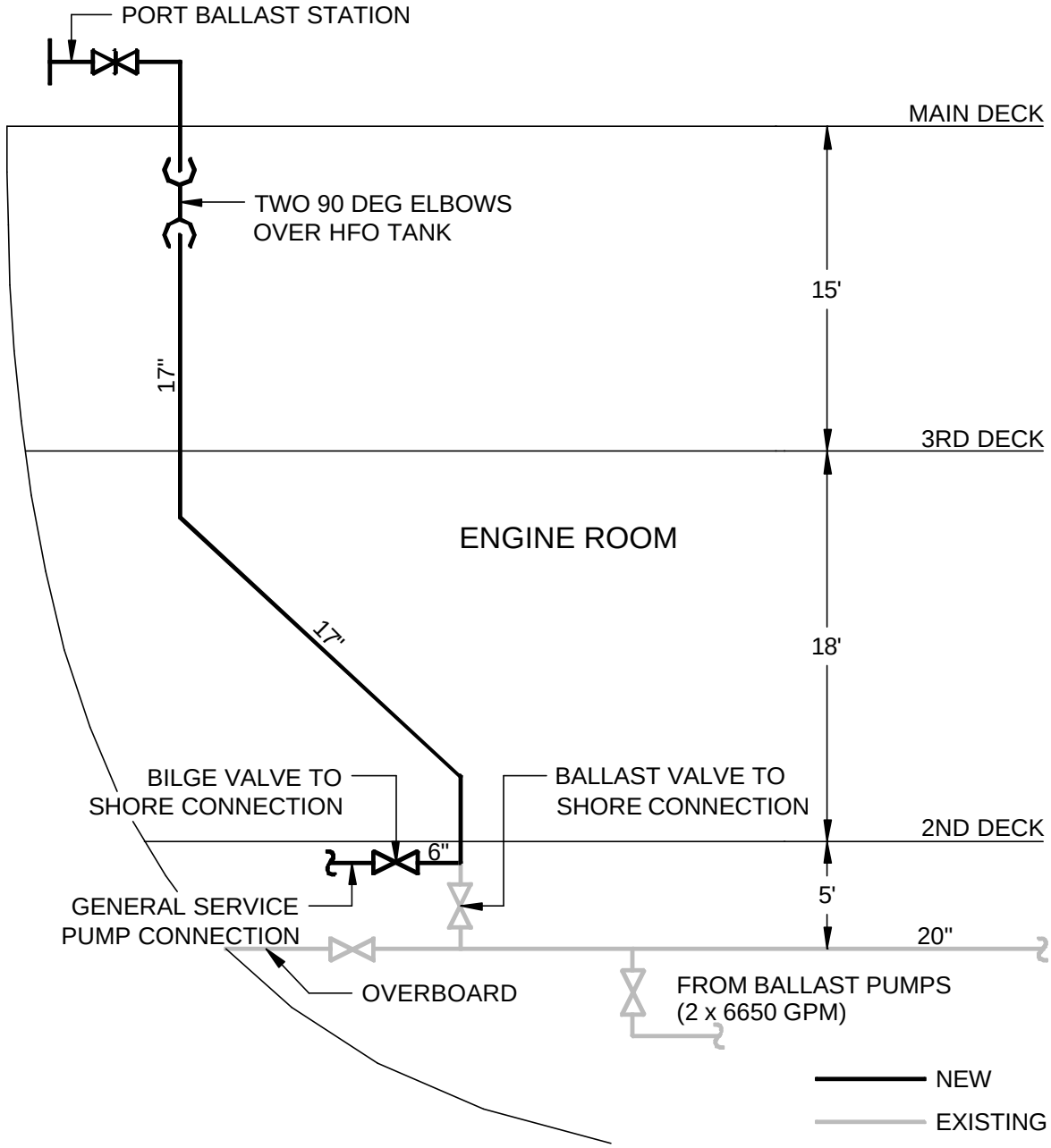

Figure 6-2: *M/S Papendracht* Ballast System Modifications

6.3 TANKERS (SURVEY: *SS TONSINA*)

General

There are two main types of tankers that call on Puget Sound. TAPS (Trans Alaska Pipeline System) service tankers carry crude oil from Valdez, Alaska, to refineries in the north Puget Sound and product carriers carry petroleum products from Puget Sound refineries to California ports. TAPS tankers arrive in Puget Sound fully loaded with cargo and with small ballast loads that they discharge for continuous trim control while offloading cargo. Product carriers arrive in Puget Sound with full ballast loads and generally discharge them before and during cargo loading.

Our survey of the *SS Tonsina*, an 869', steam-powered, TAPS tanker, was conducted while the vessel was anchored at Port Angeles, Washington, on 2 November 2001. Although product carriers discharge significantly larger amounts of ballast to Puget Sound, their configurations and operating profiles are very similar to vessels in the TAPS trade, which discharge most of their ballast in Prince William Sound and little, if any, in Puget Sound. Therefore, the conclusions drawn from the *Tonsina* are considered applicable to product tankers.

Leaving Alaska, the *Tonsina* is fully loaded with cargo and carries 29,500 to 54,000 gallons of segregated ballast for trim control. Some of this ballast is discharged at sea, leaving only what is necessary for trim control during cargo operations. While offloading cargo, some ballast can be discharged for trim control. But, with advanced planning, discharge can be avoided.

Once an adequate amount of cargo has been offloaded, *Tonsina* begins filling all forward ballast tanks by gravitating through sluice gates connecting the tanks. After gravitating, the ballast pump is used to top off the forward tanks prior to departure.

Because of a limited ballast pump capacity, the vessel begins discharging segregated ballast 12 hours before arrival at the Valdez terminal, to ensure segregated ballast is empty before the completion of cargo operations. This extended deballasting procedure is possible in relatively sheltered waterways, such as the Prince William and Puget Sounds.

Current Ballast System

The current ballast system on the Tonsina consists of 15 tanks, 1-6 port and starboard wing tanks, forepeak, aftpeak and the aft centerline ballast tank. 16" branch lines to a 24" main header connect each tank.

All ballast tanks can be gravity filled through piping sluice gate valves or filled by utilizing the 14,500-gpm ballast pump. With sluice gate valves, all wing tanks are essentially common. Ballast is discharged through the branch lines and the common header using the ballast pump. Wing tank suction can also be taken through the sluice gate valves from the branch lines in the No. 6 tanks P/S. It should be noted that when using sluice gate valves, no controlled ballasting or deballasting can be accomplished–all tanks fill and empty simultaneously.

The two aft ballast tanks (centerline ballast and the aftpeak) are serviced by the steam plant's auxiliary condensate circulation pump, and tie into a separate aft ballast overboard discharge.

For *Tonsina* to transfer all ballast to a collection service, without modifications to her ballast system, connections would have to be made to two overboard discharges, both located on the port side.

New Ballast System

If the current system was used to transfer all segregated ballast to a transfer service, the total deballast time would be approximately 28 hours. Since this time-span will cause unacceptable schedule delays, a completely new ballast system must be installed to handle much higher flow rates.

The proposed new ballast system will essentially be configured the same, but the system will be increased in size to accommodate a 28,000-gpm pump, similar to the vessel's existing cargo pumps. This ballast transfer rate will ensure that if transfer is initiated at terminal arrival, it will be completed before the completion of cargo operations. To accommodate the higher pump rate at a flow velocity of nine feet per second, branch lines to the 12 wing tanks, forepeak and aft tanks shall be increased to 24" and the main header shall be increased to 36". Completely new branch lines will be added to connect the two aft ballast tanks to the new ballast pump.

In addition to replacing the existing piping, new piping will be installed from the discharge of the new ballast pump to two new ballast transfer stations at the manifold, for connection to the transfer service. New remotely-operated butterfly valves will be installed in the engineroom and at each station. Suction lines are sized to nine feet per second. Discharge lines are sized to 12 feet per second. A diagram of the required ballast system modifications is shown in Figure 6-3.

These proposed modifications use a completely new piping system to provide the ability to fill and empty each ballast tank separately. On a crude carrier like the *Tonsina*, which does not carry segregated cargo, this capability is not necessary, because the cargo is pumped on and off in a consistent, predictable order. A simpler, lower-cost solution would simply expand the size of the sluice gates to increase the fill and discharge rate.

Product carriers, however, need greater control over the order in which tanks are filled and emptied, because cargo cannot always be pumped on and off in a manner that conforms to the order in which tanks are filled and emptied through sluice gates. Therefore, to represent the upper bound on the cost to modify a tanker for transfer, we selected the more-capable option.

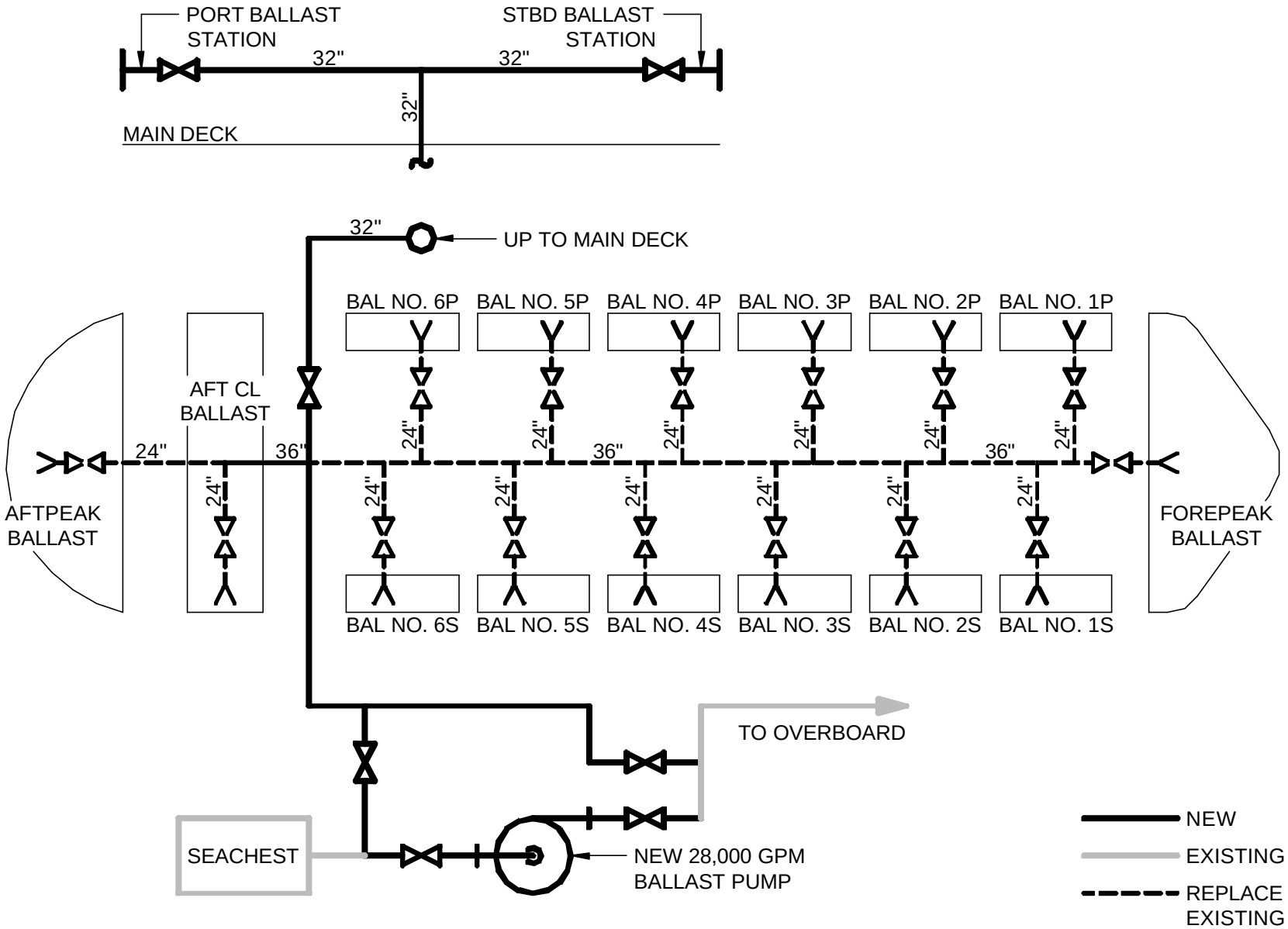

Figure 6-3: *SS Tonsina* Ballast System Modifications

6.4 GRAIN SHIPS (SURVEY: *M/V SUNNY OCEAN*)

General

Grain ships typically call on Puget Sound to load cargo for shipment to Pacific Rim, Far East, and Middle East countries. They generally arrive completely empty of cargo and full of ballast. Often, they are forced to anchor to wait for terminal availability. On arrival, they discharge ballast to prepare to load cargo.

Our survey of the *M/V Sunny Ocean*, a 735', motor-powered, bulk carrier, was conducted at Seattle Terminal 86 on 5 November 2001. *Sunny Ocean* operates on round trips from the Far East and Australia to the Western United States and Canada. This was her first ever visit to Puget Sound. Ballast operations aboard the *Sunny Ocean* generally consist of adding ballast when unloading cargo and discharging ballast when taking on cargo. *Sunny Ocean's* ballast capacity is 9,018,190 gallons. Typically, when empty of cargo, ballast on board is near 8,500,000 gallons.

Current Ballast System

The ballast system aboard the *Sunny Ocean* consists of two 5720-gpm ballast pumps. 22 ballast tanks can either be gravity filled or pumped full from either the high or low sea chest. One 14" main header runs forward, connecting all branch lines from the deep and wing tanks. The aft peak is also connected to the 14" header with an additional branch line.

There is one 20" ballast overboard located on the port side of the vessel. Discharging ballast starts either at the dock or at port arrival. Typically, this operation takes 16 hours. Cargo operations can vary from 10 hours to 2 ½ days. Occasionally, the vessel will operate with the No. 4 cargo hold full of ballast, in addition to the segregated tanks.

For *Sunny Ocean* to transfer all ballast to a collection service, without modifications to her ballast system, a single connection would have to be made to one port-side discharge.

Ballast System Modifications

To exchange ballast water with a transfer service, new piping for two new ballast transfer stations shall be installed. The new piping will tie into the existing 20" overboard piping and run vertically through the main deck. The piping will then run to the new port and starboard ballast water transfer stations.

Various fittings, such as tees and elbows, will need to be installed to route piping. In way of this piping, existing systems (such as vent ducting, wireways and smaller piping) will be relocated or modified. New remotely-operated butterfly valves will be installed in the engineroom and at each ballast transfer station.

Using the existing pumps for transfer would take approximately 10 hours at full ballast capacity, which is adequate to discharge at a cargo terminal without schedule

delays. To accommodate a nine feet per second fluid velocity at the current ballast pump rate, all new transfer pipe will be sized at 10”. A diagram of the required ballast system modifications is shown in Figure 6-4.

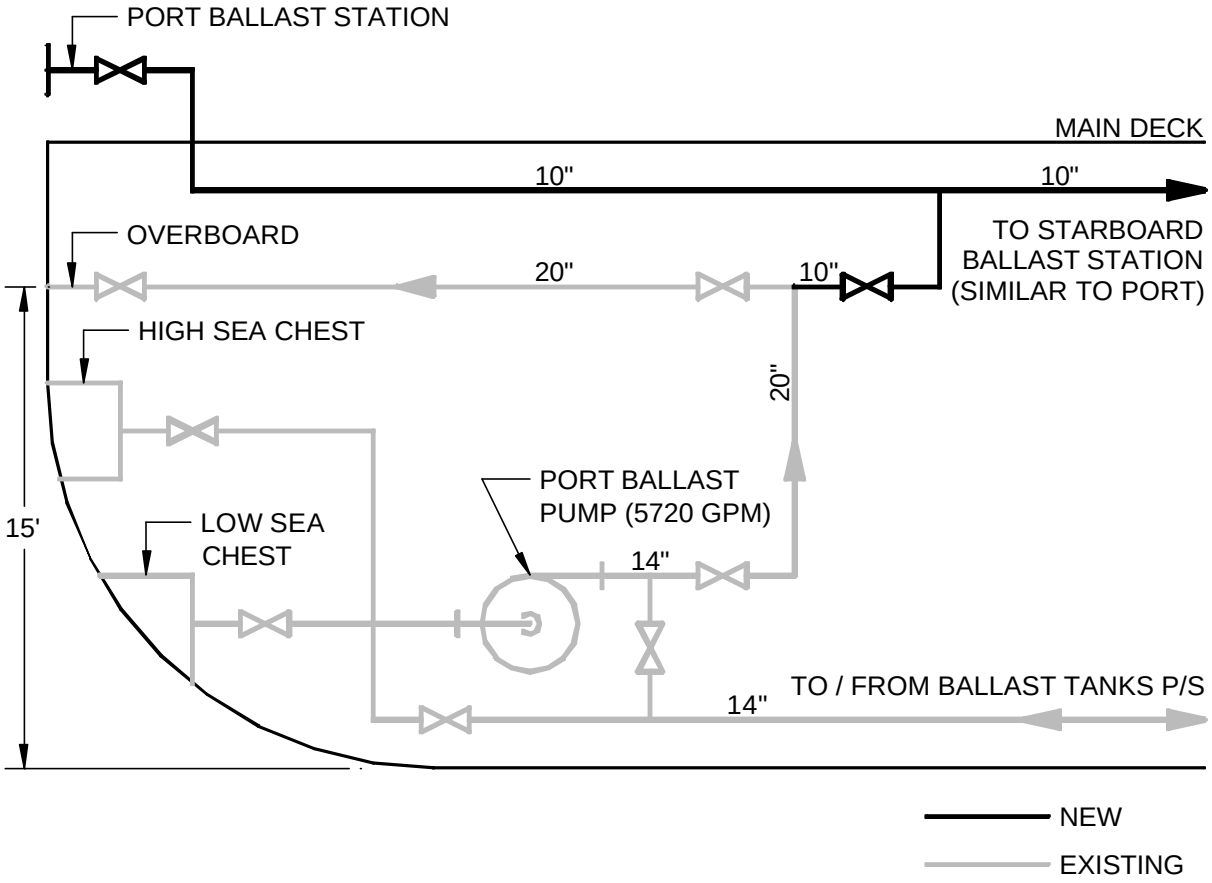

Figure 6-4: *M/V Sunny Ocean* Ballast System Modifications

6.5 CAR CARRIERS (SURVEY: *M/S UNITED SPIRIT*)

General

Car carriers call on Puget Sound ports to offload vehicles from Asia and Japan. Their cargo is generally very light compared to the overall weight of the vessel, and therefore, they are fitted with relatively low capacity ballast systems. As a result, ballast operations are not as common on car carriers as other vessels. However, at times they do discharge small amounts of ballast for trim and list control while offloading cargo.

Our survey of the *M/V United Spirit*, a 570', motor-powered, car carrier, was conducted at Pierce County Terminal B in Tacoma, Washington, on 23 November 2001. *United Spirit* operates on a monthly round-trip from Japan to Puget Sound. Ballast operations aboard the United Spirit generally consist of transferring existing ballast water from one tank to the other to compensate for trim. Taking on new ballast or deballasting is not a common event on the *United Spirit*. Typical ballast carried is approximately 1,225,758 gals. The total ballast capacity is 1,701,180 gals.

Current Ballast System

The ballast system aboard the *United Spirit* consists of two pumps (Fire & Ballast Pump – 1540 gpm and Fire & General Service Pump – 880 gpm). 11 ballast tanks can either be gravity filled or pumped full from either the high or low sea chest. The Fire and General Service pump also drives the bilge and ballast stripping eductor for removing any residual water in tanks.

Unlike other vessels, there are no main headers that run forward or aft connecting branch lines. Instead, branch lines from the forward and aft tanks run to common ballast manifolds located in the engineering spaces.

The vessel has two ballast overboard discharges, one for the ballast pump to discharge the ballast water, and one for the stripping eductor that uses ballast water to strip clean bilge water. To avoid discharging ballast water through the stripping eductor, water can be taken directly from the sea chest suction. Therefore, for *United Spirit* to discharge all ballast to a transfer service without modifications to her existing ballast system, a single connection would be required to a port-side discharge.

Ballast System Modifications

To exchange ballast water with a transfer service, new ballast water transfer stations that tie into the existing discharge manifolds shall be installed. The new piping will connect to the existing discharge manifolds of both the Fire & Ballast Pump and the Fire & General Service Pump. The piping will run vertically to the new port and starboard ballast water transfer stations.

Various fittings, such as tees and elbows, will need to be installed to route piping. In way of this piping, existing systems (such as vent ducting, wireways and smaller

piping) will be relocated or modified. New remotely-operated butterfly valves will be installed in the engineroom and at each ballast transfer station.

Cargo operations during a port call in Puget Sound typically last from 6 to 12 hours. Using the existing pumps to transfer ballast would take approximately 12 hours at a combined ballast capacity of 2420 gpm. To maintain a nine feet per second flow velocity, at the current transfer rate, all new transfer pipe will be 8". A diagram of the required ballast system modifications is shown in Figure 6-5.

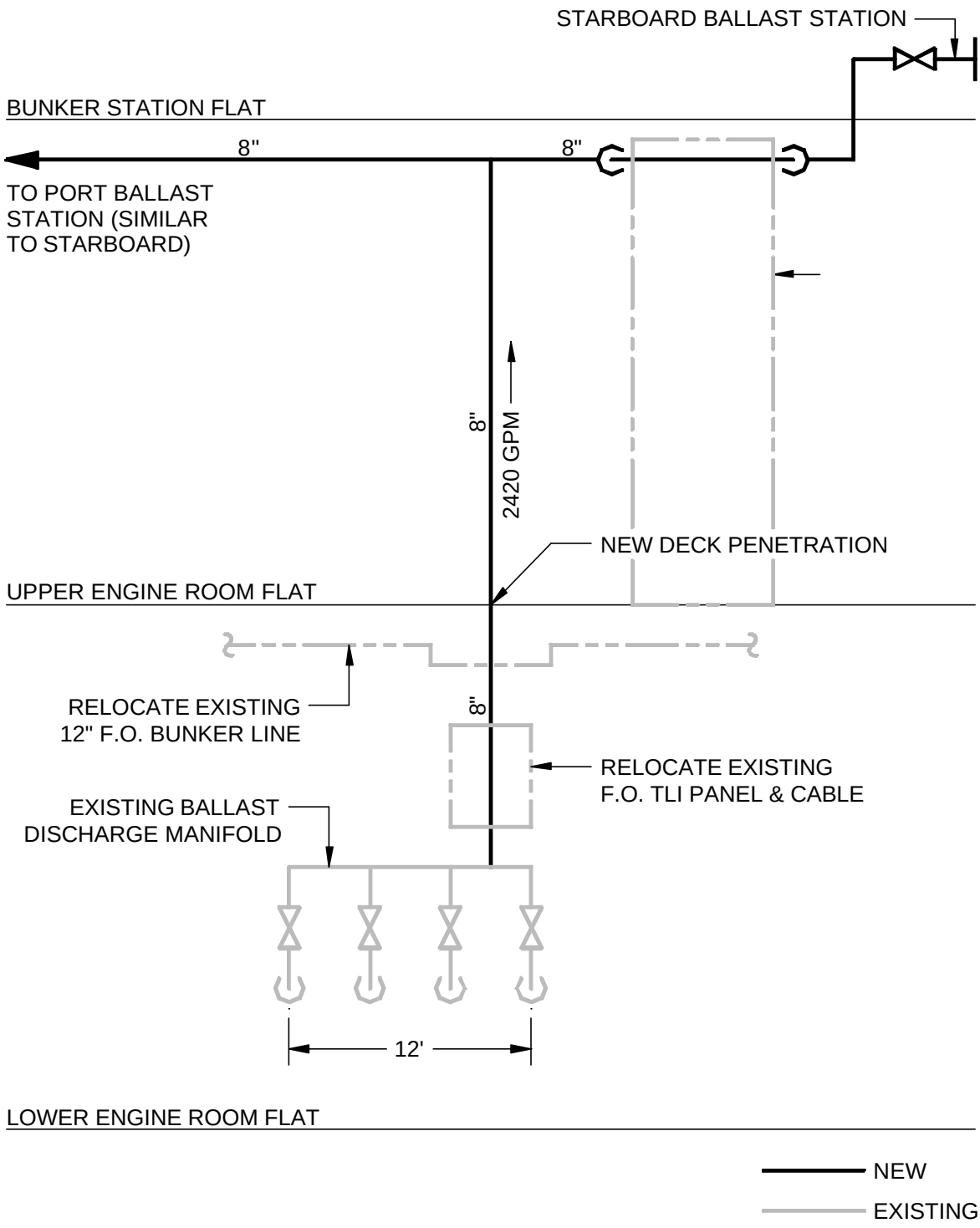

Figure 6-5: *M/S United Spirit* Ballast System Modifications

6.6 CRUISE SHIPS

Cruise ships use their ballast systems primarily to control stability and adjust heel and trim as fuel is burned off. Because cruise ship deadweight capacities are relatively light compared to the vessel's overall weight, their ballast systems are also relatively small. Also, cruise ships enjoy relatively long port stays, providing ample time to perform ballast transfer operations without schedule delays. With small ballast systems and long port stays, cruise ships will likely be able to perform ballast transfers with existing ballast pumps.

While we were unable to survey a cruise vessel for this study, our experience provides no reason to believe that retrofitting a transfer system, which would include new ballast transfer stations adjacent to fuel bunkering stations, would not be feasible.

7. BALLAST TRANSFER COSTS

7.1 MODIFICATION CAPITAL COST ESTIMATES

Cost estimates have been prepared for modifications to the five vessels surveyed for this study. All estimates include the following:

- Cost of new materials and removal of existing piping and equipment
- $30 per hour labor rate, assuming work will be conducted in the Far East
- A 10% Markup for engineering costs
- A 25% contingency for concept estimate uncertainty

The cost estimates assumed that modifications will be made during a scheduled shipyard period. Therefore, no costs are included for dry-docking, moorage, or shipyard services. A summary of the modification costs estimated for each survey is shown in Table 7-1. Details of these cost estimates are presented in Appendix A.

Table 7-1: Transfer Modification Capital Costs

Vessel	Type	Modification Cost	Ballast Capacity		Ref.
			Cubic Meters	Gallons	
SS Tonsina	Tanker	$1,892,100	~74,000	~20,160,000	A-2
M/V Sunny Ocean	Grain Ship	$106,700	34,140	9,018,190	A-3
M/S Papendracht	Break-bulk	$303,400	26,200	6,922,740	A-4
APL Japan	Container	$438,400	19,190	5,069,120	A-6
M/S United Spirit	Car Carrier	$160,700	6,440	1,701,180	A-7

7.2 DISCUSSION OF OPERATING COSTS

The costs to vessel operators of transferring ballast to and from a collection service will be composed of direct vessel operating costs, indirect operational costs, and possible fees or charges for use of a ballast transfer service.

Direct Vessel Operating Costs

Direct vessel operating costs will be those associated with operating the onboard transfer system. In the case of four of the vessels surveyed for this study, these costs will be negligible, because the pumps in the modified systems are the same as those currently in use. However, for vessels like the *Tonsina*, which will require extensive modifications to existing systems, including installing larger pumps, direct operating costs may be marginally higher than current operations, as a result of the additional fuel consumed to power the larger pumps.

Indirect Operational Costs

Indirect operational costs will result from losses in efficiency from current operations to support ballast transfer. In cases in which transfer systems are well designed to fully transfer ballast to a transfer service without interrupting existing schedules, these costs will be minimized. However, the less capable the system, the higher the likeliness that schedule delays will reduce the efficiency of current operations.

Regardless of the capability of the system, additional personnel resources will be required to transfer ballast than are currently necessary to discharge to the port. Personnel will be required to bolt and unbolt blind flanges and hoses to the ballast transfer connections. And, additional personnel resources will be required to monitor the transfer process, particularly at startup, which will likely require observers at the ballast hose connection, the ship's ballast pump, and the ship's ballast control station.

Ballast Transfer Service

While it is uncertain who will pay for transfer service (e.g. vessel operators, terminals, ports, local governments), the costs associated with such an operation are considerable. They will also vary widely with the capacity and type of service. A discussion of capital and operating costs of fixed, terminal facilities are included in Reference 2. Costs of mobile service will be higher than fixed systems for equal capacity, with barge operations likely more expensive than truck-mounted service. Unfortunately, these costs have not been well studied, because they will be critical for the industry to assess the economic feasibility of ballast transfer.

8. CONCLUSIONS

This report has documented our study of the technical feasibility of transferring ballast to and from ships, through fixed shoreside, truck-mounted, and barge-mounted ballast transfer services, to limit the discharge of invasive species to local waters. Five vessel surveys were conducted on various vessel types to address the technical challenges of ballast transfer and, ultimately, to determine whether or not

ballast transfer is a technically feasible operation. Based on our study, we have concluded the following:

- **The ability for vessels to offload ballast to a transfer service through new universal deck connections is technically feasible.** In all cases, vessels will require modifications to their existing ballast systems to accomplish transfer with minimal disruption to current operations.

- **The ability for vessels to load ballast from a transfer service is technically feasible, but requires installation of new universal deck connections.** Ballast systems cannot practically collect ballast through their existing hull penetrations, because overboard discharges are fitted with check valves preventing water from entering the vessel and sea chests will likely be impractical to connect to.

- **The ability for vessels to offload ballast to a transfer service through an existing hull penetration and an external attachment shows promise as a feasible alternative to installing new, universal deck connections for ballast transfer.**

- **Increasing the required capability of a ballast transfer system, in turn increases the costs to modify existing systems.** In some cases, particularly with vessels with small ballast capacities, minimal, if any, modifications may be required for transfer. However, as demand for higher capacity and greater flexibility increase, modification costs increase accordingly.

Modification capital costs for the surveyed vessels are tabulated in Table 7-1. Every attempt was made to capture an upper bound on the modification costs associated with each vessel type surveyed. Actual modification costs will vary from ship to ship as owner's consider their vessel's unique design and operational profile to determine the complexity and required capability of a new system.

9. RECOMMENDATIONS FOR FUTURE STUDY

For the marine industry to judge the economic feasibility of ballast transfer, there are two chief areas of study that require additional consideration.

1. To reduce the investment cost to vessel owners, attachment technology to connect a transfer service to existing hull penetrations is under development and may warrant further study. If such a system were proved practical, it is possible vessels could discharge ballast to a collection service with minimal vessel modifications, and therefore, minimal capital costs.

2. The operating costs of transfer services, as well as who would cover these costs, must be investigated further. While costs associated with fixed, shoreside service have been investigated, mobile systems have not been well studied. Since the transfer service is a recurring cost to the industry, it is a critical component to the determination of the economic feasibility of ballast water transfer.

Appendix A

Transfer System Modification Cost Estimates

SS Tonsina Ballast Transfer Modifications Cost Estimate

ITEM	DESCRIPTION	QTY	UNITS	UNIT LABOR (HOURS)	UNIT MATERIAL ($)	TOTAL LABOR (HOURS)	TOTAL MATERIAL ($)	TOTAL COST ($)
1	PIPING INSTALLATION							
	a 32" XS (on deck)	300	ft	16	180	4,800	54,000	198,000
	b 32" XS (pump room)	50	ft	32	180	1,600	9,000	57,000
	c 36" XS	500	ft	18	200	9,000	100,000	370,000
	d 24" XS	600	ft	12	130	7,200	78,000	294,000
	e Manifold Fittings P/S	2	each	240	5000	480	10,000	24,400
	Sub-Total					23,080	251,000	943,400
2	PIPING REMOVALS							
	a 24"	500	ft	6	0	3,000	0	90,000
	b 16"	600	ft	4	0	2,400	0	72,000
	Sub-Total					5,400	0	162,000
3	ELECTRICAL (controls & indicators)							
	a Tubing Runs	48	each	4	0	192	0	5,760
	b Cable Runs	96	each	2	0	192	0	5,760
	Sub-Total					384	0	11,520
4	EQUIPMENT							
	a 14k gpm Pump	2	each	500	75000	1,000	150,000	180,000
	b Remote Butterfly Valve (24")	24	each	12	4000	288	96,000	104,640
	Sub-Total					1,288	246,000	284,640

ITEM	DESCRIPTION	LABOR (HOURS)	MATERIALS ($)	TOTAL ($)	PERCENT
1	PIPING INSTALLATION	23,080	251,000	943,400	67.3%
2	PIPING REMOVALS	5,400	0	162,000	11.6%
3	ELECTRICAL (controls & indicators)	384	0	11,500	0.8%
4	EQUIPMENT	1,288	246,000	284,600	20.3%
	SUB-TOTAL	30,152	$497,000	$1,401,500	
	LABOR RATE	$30	PER HOUR		
	ENGINEERING	10%		140,200	
	ESTIMATE CONTINGENCY	25%		350,400	
	TOTAL ESTIMATED COST			$1,892,100	

M/V Sunny Ocean Ballast Transfer Modifications Cost Estimate

ITEM	DESCRIPTION	QUANTITY	UNITS	UNIT LABOR (HOURS)	UNIT MATERIAL ($)	TOTAL LABOR (HOURS)	TOTAL MATERIAL ($)	TOTAL COST ($)
1	Modifications							
	a Modify fuel oil line at bunker station	2	each	40	400	80	800	3,200
	b Misc Interferences	2	each	40	133	80	266	2,666
	Sub-Total					160	1,066	5,866
2	Installation							
	a Install 10" Pipe	200	ft	2	250	400	50,000	62,000
	b Fittings (Tee, 90, 45)	2	each	40	1000	80	2,000	4,400
	c 10" Butterfly valves & electric	3	each	20	500	60	1,500	3,300
	d Bunker Station Fittings	2	each	40	500	80	1,000	3,400
	Sub-Total					620	54,500	73,100

ITEM	DESCRIPTION	LABOR (HOURS)	MATERIALS ($)	TOTAL ($)	PERCENT
1	Modifications	160	1,100	5,900	7.5%
2	Installation	620	54,500	73,100	92.5%
	SUB-TOTAL	780	$55,600	$79,000	
	LABOR RATE	$30	PER HOUR		
	ENGINEERING	10%		7,900	
	ESTIMATE CONTINGENCY	25%		19,800	
	TOTAL ESTIMATED COST			$106,700	

M/S Papendracht Ballast Transfer Modifications Cost Estimate

ITEM	DESCRIPTION	QTY	UNITS	UNIT LABOR (HOURS)	UNIT MATERIAL ($)	TOTAL LABOR (HOURS)	TOTAL MATERIAL ($)	TOTAL COST ($)
1	Lower Engine Room							
	a Install 20" Flanged Tee (BW Tee)	2	each	16	400	32	800	1,760
	b Install 20" Fanged Tee (3 prs flanges)	6	each	8	133	48	798	2,238
	c Install hydraulically actuated 20" butt-valve	2	each	40	5000	80	10,000	12,400
	d Install 1/4" hydraulic tubing	400	ft	0.2	200	80	80,000	82,400
	e Install electrical sensing & actuation wires	400	ft	1	4	400	1,600	13,600
	f Overhead Penetration through 2nd Deck	2	each	200	800	400	1,600	13,600
	g 5' of 20" Pipe XS	10	ft	16	100	160	1,000	5,800
	h 20' of 6" Piping, Connecting Bilge System	20	ft	4	25	80	500	2,900
	Sub-Total					1,280	96,298	134,698
2	Middle Engine Room							
	a Remove/Rebuild storage racks	2	each	40	0	80	0	2,400
	b 20' of 20" Pipe XS	40	ft	20	100	800	4,000	28,000
	c 45 Elbow	4	each	20	200	80	800	3,200
	d Penetration through 3rd deck	2	each	40	0	80	0	2,400
	Sub-Total					1,040	4,800	36,000
3	Upper Engine Room							
	a Run 20' of 20" pipe vertically	40	ft	16	100	640	4,000	23,200
	b Remove/Rebuild storage racks	2	each	40	0	80	0	2,400
	c 45 Elbow	4	each	20	200	80	800	3,200
	Sub-Total					800	4,800	28,800
4	Piping over HFO Tanks							
	a Move various existing piping	2	each	420	0	840	0	25,200
	b Install 20" piping	2	each	40	500	80	1,000	3,400
	c Deck penetration to main deck	2	each	40		80	0	2,400
	d Clean fuel tank for piping supports	2	each	334		668	0	20,040
	Sub-Total					840	0	25,200

M/S Papendracht Ballast Transfer Modifications Cost Estimate (Continued)

ITEM	DESCRIPTION	QTY	UNITS	UNIT LABOR (HOURS)	UNIT MATERIAL ($)	TOTAL LABOR (HOURS)	TOTAL MATERIAL ($)	TOTAL COST ($)
5	Bunker Station							
	a Construct flanged deck connection w/ 20"	2	each	120	500	240	1,000	8,200
	b Remove/Rebuild handrail in way of station	2	each	24	100	48	200	1,640
	c Construct 90 deg adapter fitting of 20" pipe	2	each	40	500	80	1,000	3,400
	Sub-Total					368	2,200	13,240
6	Bilge Pump Connection							
	a Install 10" saddle into 20" ballast line	2	each	20	0	40	0	1,200
	b Install 10" butterfly valve	2	each	252	3400	504	6,800	21,920
	c Install 40' of 10" pipe	80	ft	10	65	800	5,200	29,200
	d Install 10" tee in existing line to new locatior	2	each	20	300	40	600	1,800
	e Move 2x2" lines, sea water, 40'	80	ft	2	12.5	160	1,000	5,800
	Sub-Total					1,544	13,600	59,920
7	Modify Control Panel	2	each	200	5000	400	10,000	22,000
	Sub-Total					400	10,000	22,000

ITEM	DESCRIPTION	LABOR (HOURS)	MATERIALS ($)	TOTAL ($)	PERCENT
1	Lower Engine Room	1,280	96,300	134,700	59.9%
2	Middle Engine Room	1,040	4,800	36,000	16.0%
3	Upper Engine Room	800	4,800	28,800	12.8%
4	Piping over HFO Tanks	840	0	25,200	11.2%
5	Bunker Station	368	2,200	13,200	5.9%
6	Bilge Pump Connection	1,544	13,600	59,900	26.7%
7	Modify Control Panel	400	10,000	22,000	9.8%
	SUB-TOTAL	3,960	$105,900	$224,700	
	LABOR RATE	$30	PER HOUR		
	ENGINEERING	10%		22,500	
	ESTIMATE CONTINGENCY	25%		56,200	
	TOTAL ESTIMATED COST			$303,400	

APL Japan Ballast Transfer Modifications Cost Estimate

ITEM	DESCRIPTION	QUANTITY	UNITS	UNIT LABOR (HOURS)	UNIT MATERIAL ($)	TOTAL LABOR (HOURS)	TOTAL MATERIAL ($)	TOTAL COST ($)
1	Connect off current discharge header							
	a Run 100' of 14" pipe in acc. Location	200	ft	15	72	3,000	14,400	104,400
	b 14" Tee in current system	2	each	40	800	80	1,600	4,000
	c Move 30' of 24" vent ducting	60	ft	6.5	66.5	390	3,990	15,690
	d Move 2" drain lines	60	ft	3.5	66.5	210	3,990	10,290
	Sub-Total					3,680	23,980	134,380
2	Riser through Main Deck							
	a Main Deck Penetration	2	each	40	0	80	0	2,400
	b Run 30' pf 14" Pipe	60	ft	15	72	900	4,320	31,320
	c Relocate Wireway	2	each	80	0	160	0	4,800
	Sub-Total					1,140	4,320	38,520
3	Bunker Station							
	a Run 10' of 14" Pipe x 2	40	ft	15	72	600	2,880	20,880
	b 90 deg elbow	4	each	40	500	160	2,000	6,800
	c Redo railings as needed	4	each	24	100	96	400	3,280
	d Deck Fittings	4	each	120	500	480	2,000	16,400
	Sub-Total					1,336	7,280	47,360
4	Transverse Run							
	a 100' of 14" pipe	200	ft	15	72	3,000	14,400	104,400
	Sub-Total					3,000	14,400	104,400

ITEM	DESCRIPTION	LABOR (HOURS)	MATERIALS ($)	TOTAL ($)	PERCENT
1	Connect off current discharge header	3,680	24,000	134,400	41.4%
2	Riser through Main Deck	1,140	4,300	38,500	11.9%
3	Bunker Station	1,336	7,300	47,400	14.6%
4	Transverse Run	3,000	14,400	104,400	32.2%
	SUB-TOTAL	9,156	$50,000	$324,700	
	LABOR RATE	$30	PER HOUR		
	ENGINEERING	10%		32,500	
	ESTIMATE CONTINGENCY	25%		81,200	
	TOTAL ESTIMATED COST			$438,400	

M/S United Spirit Ballast Transfer Modifications Cost Estimate

ITEM	DESCRIPTION	QTY	UNITS	UNIT LABOR (HOURS)	UNIT MATERIAL ($)	TOTAL LABOR (HOURS)	TOTAL MATERIAL ($)	TOTAL COST ($)
1	Simple Mods							
	a Relocate Hydraulic Lines	2	each	20	0	40	0	1,200
	b Relocate Wireway	2	each	8	0	16	0	480
	c Relocate Steam Lines	2	each	40	5000	80	10,000	12,400
	d New deck penetration	2	each	16	200	32	400	1,360
	Sub-Total					168	10,400	15,440
2	Bunker Station							
	a Relocate existing piping, insert 16"	2	each	20	200	40	400	1,600
	b Remove/Rebuild handrail in way of statio	2	each	24	100	48	200	1,640
	Sub-Total					88	600	3,240
3	Piping to Bunker Station							
	a Install 8" Piping/relocate interferences	200	ft	8	225	1,600	45,000	93,000
	b New Deck Penetration	2	each	16	0	32	0	960
	c 90 elbows	8	each	20	200	160	1,600	6,400
	Sub-Total					1,792	46,600	100,360

ITEM	DESCRIPTION	LABOR (HOURS)	MATERIALS ($)	TOTAL ($)	PERCENT
1	Simple Mods	168	10,400	15,400	12.9%
2	Bunker Station	88	600	3,200	2.7%
3	Piping to Bunker Station	1,792	46,600	100,400	84.4%
	SUB-TOTAL	2,048	$57,600	$119,000	
	LABOR RATE	$30	PER HOUR		
	ENGINEERING	10%		11,900	
	ESTIMATE CONTINGENCY	25%		29,800	
	TOTAL ESTIMATED COST			$160,700	