Preliminary Comments from Members of the Clean Air Scientific Advisory Committee CASAC Air Monitoring and Methods Subcommittee (AMMS)

Preliminary Comments received as of 2/14/11

In Preparation for Public Meeting, February 16, 2011

Carolina Inn, 211 Pittsboro Street, Chapel Hill, NC, 27516 (919-933-2001)

Purpose: To review and provide advice on the scientific adequacy and appropriateness of EPA draft documents on monitoring and methods for Oxides of Nitrogen (NOx) and Sulfur (SOx).

PRELIMINARY COMMENTS FROM MEMBERS OF AMMS

Comments from Mr. George A. Allen..... 2
Comments from Dr. Doug Burns..... 9
Comments from Dr. Judith Chow..... 11
Comments from Dr. Kenneth Demerjian..... 21
Comments from Mr. Henry (Dirk) Felton..... 23
Comments from Dr. Philip Fine..... 32
Comments from Dr. Philip Hopke..... 33
Comments from Dr. Daniel Jacob..... 41
Comments from Dr. Peter H. McMurry..... 45
Comments from Dr. Allen Robinson..... 50
Comments from Dr. Yousheng Zeng..... 54

PRELIMINARY COMMENTS FROM MEMBERS OF CASAC NOx AND SOx SECONDARY NAAQS REVIEW PANEL

Comments from Dr. Andrzej Bytnerowicz..... 58
Comments from Mr. Rich Poirot..... 61

Comments from Mr George A Allen

To: Edward Hanlon, DFO, CASAC AMMS subcommittee

CC: Ted Russell, AMMS chair

From: George Allen

Re: Preliminary Comments on charge questions related to EPA's Advisory on monitoring and methods for the secondary SOx-NOx NAAQS

Date: February 8, 2011

Q 1. What are the Panel's views on using the CASTNET filter pack (FP) to measure particulate sulfate for the purpose of providing annual average values as an indicator for the NOx/SOx standard? Given EPA plans primarily to document the capability of the CASTNET FP and develop the FRM for particulate sulfate based on the existing information and procedures, what are the Panel's views of this approach for setting the FRM?

The FP is adequate for measuring sulfate. One issue EPA will have to consider for a FRM is the size cut -- 2.5 um or open face. Castnet is open face; all other network SO4 is 2.5 um.

Q 2. What are the Panel's views on using the CASTNET filter pack (FP) to measure sulfur dioxide gas for the purpose of providing annual average values as an indicator for the NOx/SOx standard? If EPA would document the capability of the CASTNET FP and

develops an FRM for sulfur dioxide gas based on the existing information and procedures, what are the Panel's view of this approach for setting the FRM?

The FP should measure SO2 well enough for the intended purpose (dry deposition). I do not recommend that EPA consider making it an FRM; there already is an SO2 FRM as promulgated in the June SO2 NAAQS rule. The FP could be designated as an FEM, but only for the secondary standard. Additional characterization of this method compared to the existing FRM would be useful.

Q 3. What are the Panel's views on using the current primary FRM (high time resolution UVF) to measure sulfur dioxide gas for the purpose of providing annual average values as an indicator for the NOx/SOx standard?

From a data quality standard, there are no issues unless there are high NO levels (unlikely at rural sites), due to the NO rejection ratio requirements for the SO2 FRM (100:1). The question is one of resources; assuming the FP SO2 is of reasonable quality, the primary FRM could be deployed only at a small subset of "intensive" sites. There are no real issues with the FP SO2 data being used for determining compliance with the primary SO2 NAAQS, since that is driven by hourly values, not annual means.

Q 4. What are the panel's views on using existing NOy methods that are deployed, for example, in NCore as the measurement approach for NOy for the purpose of providing annual average values as an indicator for the NOx/SOx standard?

What are the panel's views on EPA's assessment that additional study is needed before establishing an FRM based on the existing NOy methods? That is, are the methods already adequately demonstrated as a reference method to determine compliance with a NAAQS?

What are the panel's views on the research plan for establishing existing NOy methods as an FRM? [Note suggested improvement to the plan would be appreciated, particularly ones that would help complete the study on time.]

As detailed in the EPA "Research Plan" of 1/20/11, data quality from existing commercial NOy instruments is difficult to characterize -- at least the NOz component (NOy - NOx). The Castnet FP provides sufficient information on deposition relevant oxidized N species when the other (large) uncertainties of the proposed secondary NAAQS are considered. Thus, from a practical point of view, I would suggest robust NO, true NO2, and NOy measurements only at a subset of sites.

I agree with EPA that additional characterization of existing commercial NOy instrument is

essential before establishing an FRM for NOy. Ideally, a single instrument that measures NO, true (photolytic) NO2, and NOy (and thus NOz) would be used; there is no reason such an instrument could be commercialized using existing technologies.

The NOy component of the EPA research plan is sufficiently comprehensive. Table 1 shows the API 200eu with speciated NOy, but this instrument does not measure NOy. Additional details on using the VOAG for generating ammonium nitrate aerosol are necessary; this is a very complex task to do correctly (Jim Schwab at ASRC-SUNY Albany has valuable experience for this). Since relative humidity (RH) may change the extent of nitrate loss (nitrate is more stable at higher RH), the effect of RH on these tests should be evaluated. Consideration of other generation methods such as the Lovelace Nebulizer

(http://www.intoxproducts.com/lovelacenebulizer) may be appropriate; in a modified form (submerging the nebulizer and other simple changes) this has shown to be a very robust way to generate aerosols from solution, and can be packaged into a portable system. A flow diagram of the HSPH aerosol generation system from the 1980's follows.

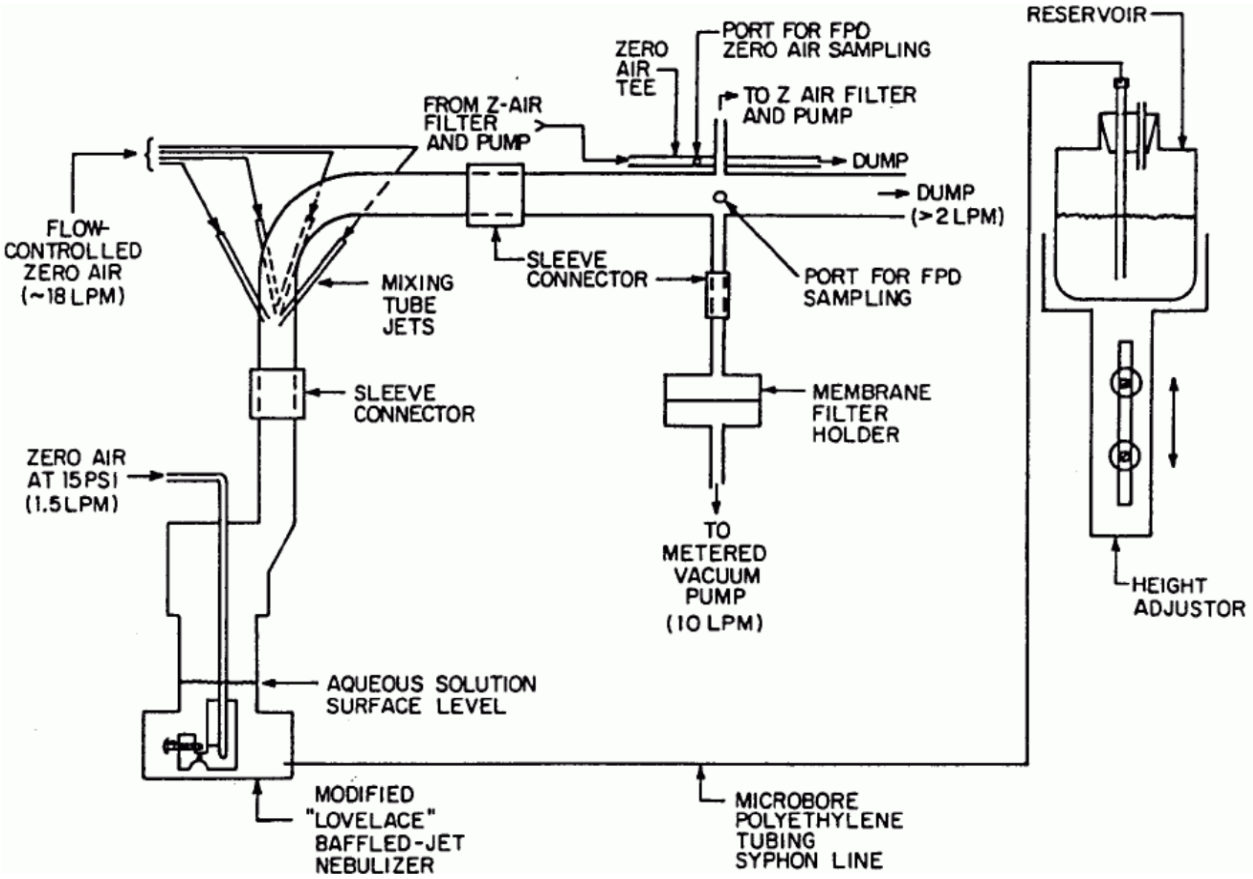

As with ammonium nitrate, generating HNO3 and NH3 and delivering it to a sampler without significant losses is challenging. More detail on this would be useful; very short residence times, very clean borosilicate glass, and heating are essential components of any such system. Whatever aerosol generation system is used, it may be useful to assess its relative output in real time with a nephelometer (light scattering); if the moisture content (RH) of the aerosol changes, the nephelometer data would need to account for enhanced scattering of nitrate or sulfate aerosols at RH values greater than ~ 40%.

Q 5. What are the Panel's views on using the CASTNET filter pack (FP) to measure total nitrate for the purpose of providing annual average values as a surrogate indicator for the NOx/SOx standard? If EPA would document the capability of the CASTNET FP and develops an FRM for total nitrate based on the existing information and procedures, what are the Panel's views of this approach for setting the FRM?

The FP does not provide a measure of ammonium nitrate, but it does provide a reasonable measure of the sum of nitric acid, nitrous acid, and ammonium nitrate if the Teflon and Nylon nitrate data are summed. For a total nitrate FRM, an acid gas denuder would have to be used upstream of the Nylon filter. Even then, there can be modest losses of ammonium nitrate. Babich et al. (J. Air & Waste Manage. Assoc. 50:1095-1105, table 5, Bakersfield 1999) showed a ratio of 1.33 for low-volume Teflon filter divided by denuder/Nylon filter nitrate. In other words, the low-volume Teflon filter sampler (the so called “Harvard Impactor”, or “HI”) measured substantially more nitrate than the Nylon filter method. While some positive artifact on the HI is possible, it is unlikely to account for much of the reported difference. This implies that a Nylon filter nitrate method may under-measure ammonium nitrate, and this would have to be investigated during the FRM evaluation process.

Q 6. What are the panel's views on using the emerging AMoN ammonia monitoring network that uses passive sampling technology as a tool for evaluating air quality model behavior with respect to characterizing ambient air patterns of ammonia?

The Radiello® passive samplers used in the AMoN network appear to be suitable for 2 week duration samples. See the precision/accuracy and blanks plots on pages 7 and 8 of a CAMD

presentation from October 27, 2010:

http://www.nescaum.org/documents/mac/mac-committee-meeting-3/rury-amon.pdf/

These results are presumably from carefully controlled tests, and thus may not reflect the data quality from routine field measurements.

Q 7. What are the panel's views on co-locating ammonia measurements at each location where the indicators are measured?

This question is unclear about the nature of the co-located sampling. It could mean a pair of passive samplers, or a denuder-based method co-located with the AMoN passive sampler. Assuming the former, a substantial percentage of sites should have co-located passive samplers to establish real-world precision (at least initially). It may also be appropriate for a smaller subset of sites to have active-flow denuder samplers co-located with the passive sampler to provide information on real-world accuracy.

Q 8. What are the Panel's views on using the CASTNET filter pack (FP) to measure ammonium ion as a tool for evaluating air quality model behavior with respect to characterizing ambient air patterns of ammonia?

The sum of Teflon and Nylon FP filters probably provides a reasonable measurement of ammonium ion, but there are some uncertainties and biases. First, ammonium from nitrate can be lost from the Nylon filter in some cases; see: Yu et al., "Loss of fine particle ammonium from denuded nylon filters", Atmospheric Environment 40 (2006) 4797–4807. These losses are dominated by ammonium nitrate, not ammonium sulfate. At sites where ammonium nitrate levels were high and dominant, average losses of up to 28% ammonium ion were observed (this was with a denuded sample removing acid gases, but that is not expected to change these results significantly). While this is a negative artifact, there is a likely positive artifact in areas with strongly acidic sulfate. In rural areas with elevated sulfate levels (typically in warm weather seasons), the sulfate is more acidic during the day (downward vertical mixing of non-boundary-layer air masses) and ammonia levels are low. At night, ammonia levels are likely to be higher (sources are at the surface), and ammonia may neutralize some of the acidic sulfate on the Teflon

filter, resulting in a positive artifact. In theory, robust measurements of ammonium ion could be made using acid and basic gas denuders upstream, a Nylon filter, and a “trap” for ammonia downstream (coated filter or denuder).

Q 9. What are the panel's views on establishing a suite of NOy species measurements at 2- 5 locations in different atmospheric and ecological regions for the purpose of evaluating air quality model and NOy instrument behavior?

This is a good approach that would be very useful in evaluating models and NOy measurements.

Q 10. What are the panel's views on utilizing the existing CASTNET and rural NCore networks as a starting infrastructure for the purpose of supporting the NOx/SOx standard?

This is an obvious choice in a resource constrained scenario, even if the resulting network is not ideally located from the SOx-NOx perspective. There is concern from state and local air agencies about having someone else (a contractor to CAMD in this case, not under air agency control) make measurements that could be used to demonstrate non-compliance with a NAAQS.

Q 11. What are the panel's views on using CASTNET filter pack (FP) to measure total nitrate (particulate nitrate plus nitric acid) as the measurement approach for the purpose of providing annual average values to support the NOx/SOx standard in diagnosing NOy instrument behavior and assist in delineating the relative fractions of contributing oxidized nitrogen species to total ambient oxidized nitrogen.

FP total nitrate is a reasonable metric for a NOx/SOx standard. I do not see it being useful in diagnosing NOy instrument behavior for several reasons - the most obvious being the 1-week duration of the FP sample. It is also not very useful for delineating the relative fractions of contributing oxidized nitrogen species to total ambient oxidized nitrogen, since it is the sum of

nitric acid and ammonium nitrate.

Q 12. What are the panel's view of the broader consideration of using CASTNET, complemented by rural NCore, to serve as a framework for the nation's rural monitoring of important gases and aerosols in support of secondary standards and evaluating the behavior of regional air quality models?

See Q 10 above.

Comments from Dr Doug Burns

General Comments

Nearly all of the charge questions for this panel have several questions embedded within that are not explicitly mentioned, but will have to be discussed as this panel formulates its recommendations. Moving forward will require a balance of the accuracy and precision of sampling/analytical methods against the costs and financial resources that are likely to be available to address the NOx-SOx secondary standard. Issues such as the proper balance between spatial and temporal intensity of measurements, the need for FRM/FEM approval of methods/instruments, leveraging current available monitoring, and the adequacy of current monitoring site locations will all come into play in our eventual recommendations.

My general recommendation ahead of our first meeting is that we ought to leverage existing networks, especially CASTNET, to meet the new secondary standards. Priority should be given to regions such as the Adirondack Mountains, Shenandoah National Park, Great Smoky Mountains National Park, Appalachian Mountains of Pennsylvania, and mountains of northern New England. NADP/NTN sites should also be looked at as providing leveraging opportunities in these most sensitive regions. Temporal measurement resolution of one week is adequate and is consistent with the existing resolution of wet deposition measurements at NADP/NTN sites. I also agree that it would be helpful for model calibration purposes as well as for ground truthing, to have at least a handful of sites where measurement of individual species of NOy and SOx are done by state-of-the-art methods at a more intensive temporal scale than would be done at the less intensive sites.

Charge Question 10 – Use of CASTNET filter pack to measure total nitrate as a surrogate indicator for NOx-SOx secondary standard

Measurement of total nitrate is currently done at all CASTNET sites using the filter pack. These measurements are generally viewed as providing accurate data on nitric acid and particulate nitrate concentrations in ambient air (see CASTNET QA reports on line). Currently, data on total dry nitrate combined with particulate ammonium from CASTNET is “the” measurement to calculate dry N deposition for those working in remote/rural ecosystems sensitive to acidification. Clearly, these species from CASTNET do not represent all dry deposited N species and therefore, the CASTNET measurements provide an underestimate of deposition. The key question to answer then becomes: Does total nitrate from CASTNET vary in a predictable manner relative to the other key dry N species such as NH_3, NO_2, and PAN? If the answer is yes or close enough to yes, then CASTNET total nitrate from the filter pack would be a good surrogate for the secondary standard. Data shared with this subcommittee from two sites in Canada (measured by CAPMON), as well as work by Jed Sparks and others suggest that key N

species such as NH_3, NO_2, and PAN vary significantly both spatially and temporally and not necessarily synchronously with total nitrate. This would indicate that total nitrate is not a good surrogate for NOy. However, this needs to be placed in the proper perspective of the purpose of the secondary standard. First, dry N deposition is no more (and probably less) than 50% of total N deposition in rural areas of the eastern US. Second, total N deposition is in the neighborhood of 40% of total acid deposition. So, dry N deposition is in the range of 20% of the "acid load" to sensitive ecosystems, and since the "missing" dry N species are probably no more than 50% of the dry N load (and probably less), then we are talking about missing at most only about 10% of the total acid load to these ecosystems. So, even if total nitrate from CASTNET is an imperfect surrogate, we are not missing that much of the relevant acid load from an ecosystem and secondary standards perspective. So, use of total nitrate from CASTNET should be given serious consideration as a surrogate for NOy. Passive NH_3 samplers of the type used in the AMoN network could easily be added to relevant CASTNET sites to improve the estimation of total dry N deposition. Also, if several CASTNET sites were set-up with an NOy instrument for side-by-side comparisons with total nitrate filter packs, these could provide data to develop better predictive models of NOy from total nitrate.

Charge Question 5 – Use of the AMoN ammonia monitoring network

This is a question that gets to the issue of being able to make lots of measurements inexpensively (passive samplers) vs. being able to make fewer measurements (denuder), but more expensively. I have observed the development of the AMoN network first hand. It is clear based on comparisons done among three passive NH_3 devices that the Radiello were the most accurate of the passive samplers available at that time. The tests performed with the Radiello samplers indicate good precision (< 10%) and a low bias compared to side-by-side denuder measurements. The low bias appears to be on the order of 0.3 to 0.6 ug/m^3 based on the comparisons I have seen. This obviously becomes more of a problem at sites with low NH_3 concentrations where the deviations are greatest in absolute and relative terms. My recommendation would be to deploy as many denuder samplers as budgets allow, including some sites that have both a denuder and a passive sampler. The passive samplers could then be used to create a denser network of sites in areas of particular interest such as the Adirondacks and Shenandoah Park.

Comments from Dr. Judith Chow

1 What are the Panel's views on using the CASTNET filter pack (FP) to measure particulate sulfate for the purpose of providing annual average values as an indicator for the NOx/SOx standard? Given EPA plans primarily to document the capability of the CASTNET FP and develop the FRM for particulate sulfate based on the existing information and procedures, what are the Panel's views of this approach for setting the FRM?

The weeklong CASTNET samples provide a good measurement of annual average water-soluble SO_4. SO_4 values are comparable within the network and with other networks (Lavery et al., 2009; Sickles, II et al., 1999; Sickles, II and Shadwick, 2002).

2 What are the Panel's views on using the CASTNET filter pack (FP) to measure sulfur dioxide gas for the purpose of providing annual average values as an indicator for the NOx/SOx standard? If EPA would document the capability of the CASTNET FP and 4 develops an FRM for sulfur dioxide gas based on the existing information and procedures, what are the Panel's view of this approach for setting the FRM?

The weeklong CASTNET samples provide a reasonable measurement of annual average SO_2. It considers the partial collection of SO_2 (Japar and Brachaczek, 1984; Sickles, II and Hodson, 1999a; Sickles, II and Hodson, 1999b) on Nylon filters and adds this to the SO_2 measurement on the impregnated cellulose filters. There might be a possible negative bias owing to reaction of SO_2 with alkaline soils sampled the Teflon-membrane filter (Eatough et al., 1995; Eldred and Cahill, 1997; Usher et al., 2002). Sickles et al. (1999) provide methodological caveats that appear to be addressed in current CASTNET procedures. Filter pack SO_2 concentrations are reasonably comparable within and between networks (Bennett et al., 1994; Bytnerowicz et al., 2002; Chow et al., 1993; Lavery et al., 2009).

3 What are the Panel's views on using the current primary FRM (high time resolution UVF) to measure sulfur dioxide gas for the purpose of providing annual average values as an indicator for the NOx/SOx standard?

Many hourly SO_2 levels may be below the lower quantifiable limits (LQL), which are usually higher than the manufacturer's minimum detection limits (MDL), at regional sites. It would be necessary to evaluate the effect on non-detects on the annual average if a continuous FRM were to be used for an annual average.

4 What are the panel's views on using existing NOy methods that are deployed, for example, in NCore as the measurement approach for NOy for the purpose of providing annual average values as an indicator for the NOx/SOx standard? What are the panel's views on EPA's assessment that additional study is needed before establishing an FRM based on the existing NOy methods? That is, are the methods already adequately demonstrated as a reference method to determine compliance with a NAAQS? What are the panel's views on the research plan for establishing existing NOy methods as an FRM? [Note suggested improvement to the plan would be appreciated, particularly ones that would help complete the study on time.]

An evaluation is needed to determine how values below detection limits will be incorporated into an annual average. More study is needed for NO_y monitors in non-urban areas. Small variations in converter efficiency can bias these data.

5 What are the panel's views on using the emerging AMoN ammonia monitoring network that uses passive sampling technology as a tool for evaluating air quality model behavior with respect to characterizing ambient air patterns of ammonia?

Passive samplers can provide reasonable estimates of ambient concentrations and are widely used in other countries and in some parts of the U.S. (Adon et al., 2010; Alonso et al., 2005; Bytnerowicz et al., 2010; Cao et al., 2009; Kirchner et al., 2005; Martins et al., 2007; Meng et al., 2010; Mosquera et al., 2005; Moumen et al., 2004; Nishikawa et al., 2009; Ramadan, 2010). An argument might be made that a passive monitor better represents deposition than does an ambient concentration coupled with a deposition velocity. The Radiello passive sampler (Allou et al., 2008; Bruno et al., 2005; 2008a; 2008b; Chiriac et al., 2009; Diaz-de-Quijano et al., 2009; Pennequin-Cardinal et al., 2005; Plaisance et al., 2008; Ribas and Penuelas, 2006; Strandberg et al., 2005; Strandberg et al., 2006; Sturaro et al., 2010) has been tested and applied for VOCs and O_3, but there is no reason to believe it can't be adapted to NH_3. More collocated data are needed from the AMoN network to evaluate the value of the network.

6 What are the panel's views on co-locating ammonia measurements at each location where the indictors are measured?

This is a good idea.

7 What are the Panel's views on using the CASTNET filter pack (FP) to measure ammonium ion as a tool for evaluating air quality model behavior with respect to characterizing ambient air patterns of ammonia?

This is a good idea. A parallel filter pack with a Teflon backed by a citric acid (or other acidic substance) impregnated cellulose-fiber filter or a citric acid coated denuder would be needed. Adding another stage to the existing filter pack might work if NH_4 were analyzed on all of the intervening stages.

8 What are the panel's views on establishing a suite of NOy species measurements at 2- 5 locations in different atmospheric and ecological regions for the purpose of evaluating air quality model and NOy instrument behavior?

Resolve the issue of below LQL values first.

9 What are the panel's views on utilizing the existing CASTNET and rural NCore networks as a starting infrastructure for the purpose of supporting the NOx/SOx standard?

See answer to question 11.

10 What are the panel's views on using CASTNET filter pack (FP) to measure total nitrate (particulate nitrate plus nitric acid) as the measurement approach for the purpose of providing annual average values to support the NOx/SOx standard in diagnosing NOy instrument behavior and assist in delineating the relative fractions of contributing oxidized nitrogen species to total ambient oxidized nitrogen.

The CASTNET FP provides a good measure of total nitrate as defined. It does not provide as good a distinction between pNO_3 and HNO_3. Figure 1 illustrates the CASTNET filter pack and Figure 2 summarizes the analyses applied to each filter.

Figure 1-4 Three-Stage Filter Pack

Cellulose (2)	Nylon	Teflon®
Gaseous	Gaseous	Particulate
• SO_2	• HNO_3 • SO_2	• SO_4^{2-} • NO_3^- • NH_4^+ • K^+ • Ca^{2+} • Mg^{2+} • Na^+ • Cl^-

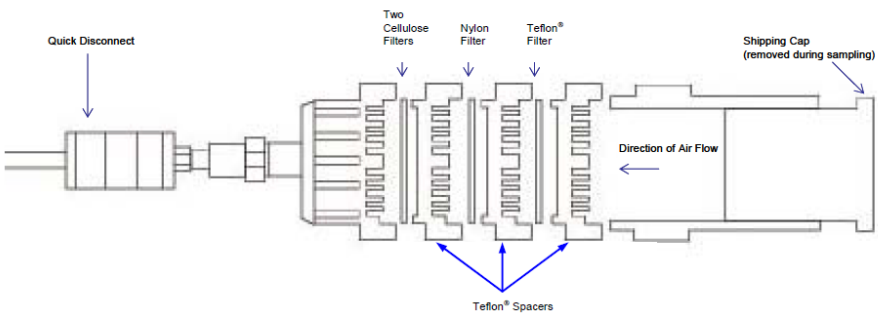

Figure 1. The CASNET filter pack (MACTEC, 2010). Filters are placed in series in an open-faced Savillex FEP Teflon filter holder. The two cellulose fiber filters are impregnated with a K_2CO_3 solution that reacts with SO_2 to form SO_4. The filter pack is located atop a 10 m boom with the receptacle facing downward. Samples are taken continuously for 184 hour durations (1 week) at flow rates of 1.5 L/min for eastern sites and 3.0 L/min for western sites.

Table 3-2 Summary of Analytical Methods by Sample Type

Operation	Sampling Media	Analytes	Instrumentation	Reference Method
Dry Deposition				
Filter Pack System	Teflon® Filter	NO_3^- (as N), SO_4^{2-}, Cl^-	IC Dionex DX500/300	EPA Method 300.0*
		NH_4^+	Bran+Luebbe AutoAnalyzer 3	EPA Method 350.1
		Ca^{2+}, Mg^{2+}, Na^+, K^+	ICP-AES PE 3000 DV	EPA Method 6010
	Nylon Filter	NO_3^- (as N), SO_4^{2-}	IC Dionex DX500/300	EPA Method 300.0
	Cellulose Filter	SO_4^{2-}	IC Dionex DX500/300	EPA Method 300.0

Figure 2. Analysis methods applied to distilled water extracts from each CASTNET filter (MACTEC, 2009). Since the Nylon filter adsorbs some of the SO_2 (Sickles, II et al., 1999; Sickles, II and Hodson, 1999a; 1999b), SO_4 is also measured on Nylon and added to the S collected on the cellulose-fiber filters.

The Nylon and impregnated filter technology for HNO_3 and SO_2 is well established and has been thoroughly evaluated (Appel et al., 1980; Axelrod and Hansen, 1975; Chow et al., 1993; Ferek et al., 1991; Ferek et al., 1997; Forrest et al., 1980; Forrest and Newman, 1973; Huygen, 1963; Johnson and Atkins, 1975; Leppanen et al., 2005; Lewin and Zachau-Christiansen, 1995; Matsuda and Cahill, 1985; Orr et al., 1967; Sickles, II et al., 1999; Talbot et al., 1990; Tsai et al., 2004). Aside from the FPs simplicity and cost-effectiveness, its major advantage is that all suspendable particles are collected and there are no interfering sampling surfaces that adsorb HNO_3. Its major disadvantage is the distinction between pNO_3 and HNO_3. The separation is probably reasonable during winter, when temperatures are <15 °C and NH_4NO_3 dissociation is low (Appel et al., 1979; Appel, 1994; Chow et al., 2005; Spicer and Schumacher, 1979; Zhang and McMurry, 1991; Zhang and McMurry, 1987). On the other hand, when alkaline soils, sea salt, or deicing material are sampled on the front filter, these particles can collect the HNO_3 that will be measured as pNO_3 (Dasch and Cadle, 1990; Goodman et al., 2000; Krueger et al., 2004; Laskin et al., 2005; Liu et al., 2008; Ooki and Uematsu, 2005; Umann et al., 2005; Underwood et al., 2001). There is evidence of effect from studies involving comparisons of PM_{10} and $PM_{2.5}$ pNO_3 (Chow et al., 1993; Lavery et al., 2009).

The CASTNET filter pack also samples droplets in rain and fog, and there is some evidence that this decreases some of the concentrations when there is evidence of filter wetting (Smith, 2002).

11 What are the panel's view of the broader consideration of using CASTNET, complemented by rural NCore, to serve as a framework for the nation's rural monitoring of important gases and aerosols in support of secondary standards and evaluating the behavior of regional air quality models?

The framework should not be limited to CASTNET and NCore sites. CASTNET is adequate for determining annual averages, the weekly average measurements are not optimal for evaluating regional-scale models that intend to incorporate meteorological phenomena that change over a period of days or less. An integrated data set of regionally-representative measurements from all available networks needs to be assembled and evaluated. VIEWS (2010) provided a good start for this, but it never had the constituency needed to support it. The NAMS/SLAMS network contains regionally-relevant sites, usually located downwind of population centers, and these should be included. IMPROVE (DeBell et al., 2006; IMPROVE, 2011; Joseph et al., 1987; Malm et al., 2000; Sisler et al., 1996; Watson, 2002), SEARCH (Hansen et al., 2003; 2006), AIRMon (Gilliland et al., 2002; NOAA, 2011), CAPMon (Environment Canada, 2011; Zhang et al., 2009), and probably other networks should be considered in such a framework.

12 References

Adon, M.; Galy-Lacaux, C.; Yoboue, V.; Delon, C.; Lacaux, J.P.; Castera, P.; Gardrat, E.; Pienaar, J.; Al Ourabi, H.; Laouali, D.; Diop, B.; Sigha-Nkamdjou, L.; Akpo, A.; Tathy, J.P.; Lavenu, F.; Mougin, E. (2010). Long term measurements of sulfur dioxide, nitrogen dioxide, ammonia, nitric acid and ozone in Africa using passive samplers. *Atmos. Chem. Phys.*, **10**(15): 7467-7487.

Allou, L.; Marchand, C.; Mirabel, P.; Le Calve, S. (2008). Aldehydes and BTEX measurements and exposures in university libraries in Strasbourg (France). *Indoor and Built Environment*, **17**(2): 138-145.

Alonso, R.; Bytnerowicz, A.; Boarman, W.I. (2005). Atmospheric dry deposition in the vicinity of the Salton Sea, California - I: Air pollution and deposition in a desert environment. *Atmos. Environ.*, **39**(26): 4671-4679.

Appel, B.R. (1994). Atmospheric sample analysis and sampling artifacts. In *Aerosol Measurement: Principles, Techniques, and Applications*, Willeke, K., Baron, P. A., Eds.; Van Nostrand, Reinhold: New York, NY, 233-259.

Appel, B.R.; Wall, S.M.; Tokiwa, Y.; Haik, M. (1980). Simultaneous nitric acid, particulate nitrate and acidity measurements in ambient air. *Atmos. Environ.*, **14**(5): 549-554.

Appel, B.R.; Wall, S.M.; Tokiwa, Y.; Halik, M. (1979). Interference effects in sampling particulate nitrate in ambient air. *Atmos. Environ.*, **13**: 319-325.

Axelrod, H.D.; Hansen, S.G. (1975). Filter sampling method for atmospheric sulfur dioxide at background concentrations. *Anal. Chem.*, **47**: 2460-2461.

Bennett, R.L.; Stockburger, L.; Barnes, H.M. (1994). Comparison of sulfur measurements from a regional fine particle network with concurrent ACID MODES network results. *Atmos. Environ.*, **28**(3): 409-419.

Bruno, P.; Caputi, M.; Caselli, M.; de Gennaro, G.; de Rienzo, M. (2005). Reliability of a BTEX radial diffusive sampler for thermal desorption: Field measurements. *Atmos. Environ.*, **39**(7): 1347-1355.

Bruno, P.; Caselli, M.; de Gennaro, G.; Iacobellis, S.; Tutino, M. (2008a). Monitoring of volatile organic compounds in non-residential indoor environments. *Indoor Air*, **18**(3): 250-256.

Bruno, P.; Caselli, M.; de Gennaro, G.; Scolletta, L.; Trizio, L.; Tutino, M. (2008b). Assessment of the impact produced by the traffic source on VOC level in the urban area of Canosa di Puglia (Italy). *Water Air and Soil Pollution*, **193**(1-4): 37-50.

Bytnerowicz, A.; Fraczek, W.; Schilling, S.; Alexander, D. (2010). Spatial and temporal distribution of ambient nitric acid and ammonia in the Athabasca Oil Sands Region, Alberta. *Journal of Limnology*, **69**: 11-21.

Bytnerowicz, A.; Tausz, M.; Alonso, R.; Jones, D.; Johnson, R.; Grulke, N. (2002). Summer-time distribution of air pollutants in Sequoia National Park, California. *Environ. Poll.*, **118**(2): 187-203.

Cao, J.J.; Zhang, T.; Chow, J.C.; Watson, J.G.; Wu, F.; Li, H. (2009). Characterization of atmospheric ammonia over Xi'an, China. *AAQR*, **9**(2): 277-289.

Chiriac, R.; Carre, J.; Perrodin, Y.; Vaillant, H.; Gasso, S.; Miele, P. (2009). Study of the dispersion of VOCs emitted by a municipal solid waste landfill. *Atmos. Environ.*, **43**(11): 1926-1931.

Chow, J.C.; Watson, J.G.; Bowen, J.L.; Frazier, C.A.; Gertler, A.W.; Fung, K.K.; Landis, D.; Ashbaugh, L.L. (1993). A sampling system for reactive species in the western United States. In *Sampling and Analysis of Airborne Pollutants*, Winegar, E. D., Keith, L. H., Eds.; Lewis Publishers: Ann Arbor, MI, 209-228.

Chow, J.C.; Watson, J.G.; Lowenthal, D.H.; Magliano, K.L. (2005). Loss of PM2.5 nitrate from filter samples in central California. *J. Air Waste Manage. Assoc.*, **55**(8): 1158-1168.

Dasch, J.M.; Cadle, S.H. (1990). The removal of nitric acid to atmospheric particles during a wintertime field study. *Atmos. Environ.*, **24A**(10): 2557-2562.

DeBell, L.J.; Gebhart, K.A.; Hand, J.L.; Malm, W.C.; Pitchford, M.L.; Schichtel, B.A.; White, W.H. (2006). Spatial and seasonal patterns and temporal variability of haze and its constituents in the United States: Report IV.

prepared by National Parks Service, Fort Collins, CO, http://vista.cira.colostate.edu/improve/Publications/Reports/2006/PDF/IMPROVE_Report_IV.pdf

Diaz-de-Quijano, M.; Penuelas, J.; Ribas, A. (2009). Increasing interannual and altitudinal ozone mixing ratios in the Catalan Pyrenees. *Atmos. Environ.*, **43**(38): 6049-6057.

Eatough, D.J.; Lewis, L.J.; Eatough, M.; Lewis, E.A. (1995). Sampling artifacts in the determination of particulate sulfate and SO2(g) in the desert southwest using filter pack samplers. *Environ. Sci. Technol.*, **29**(3): 787-791.

Eldred, R.A.; Cahill, T.A. (1997). Sulfate sampling artifact from SO_2 and alkaline soil. *Environ. Sci. Technol.*, **31**(5): 1320-1324.

Environment Canada (2011). CAPMon-Canadian air and precipitation monitoring network. prepared by Environment Canada, Toronto, ON, http://www.msc-smc.ec.gc.ca/NAtChem/particles/n_capmon_e.html

Ferek, R.J.; Covert, P.A.; Luke, W. (1997). Intercomparison of measurements of sulfur dioxide in ambient air by carbonate-impregnated filters and Teco pulsed-fluorescence analyzers. *J. Geophys. Res.*, **102**(D13): 16267-16272.

Ferek, R.J.; Hegg, D.A.; Herring, J.A.; Hobbs, P.V. (1991). An improved filter pack technique for airborne measurement of low concentrations of SO_2. *J. Geophys. Res.*, **96**(D12): 22373-22378.

Forrest, J.; Newman, L. (1973). Sampling and analysis of atmospheric sulfur compounds for isotope ratio studies. *Atmos. Environ.*, **7**(5): 561-573.

Forrest, J.; Tanner, R.L.; Spandau, D.; D'uttavio, T.; Newman, L. (1980). Determination of total inorganic nitrate utilizing collection of nitric acid on NaCl--impregnated filters. *Atmos. Environ.*, **14**(1): 137-144.

Gilliland, A.B.; Butler, T.J.; Likens, G.E. (2002). Monthly and annual bias in weekly (NADP/NTN) versus daily (AIRMoN) precipitation chemistry data in the eastern USA. *Atmos. Environ.*, **36**(33): 5197-5206.

Goodman, A.L.; Underwood, G.M.; Grassian, V.H. (2000). A laboratory study of the heterogeneous reaction of nitric acid on calcium carbonate particles. *J. Geophys. Res.*, **105**(D23): 29053-29064.

Hansen, D.A.; Edgerton, E.; Hartsell, B.; Jansen, J.; Burge, H.; Koutrakis, P.; Rogers, C.; Suh, H.; Chow, J.C.; Zielinska, B.; McMurry, P.; Mulholland, J.; Russell, A.; Rasmussen, R. (2006). Air quality measurements for the aerosol research and inhalation epidemiology study. *J. Air Waste Manage. Assoc.*, **56**(10): 1445-1458.

Hansen, D.A.; Edgerton, E.S.; Hartsell, B.E.; Jansen, J.J.; Kandasamy, N.; Hidy, G.M.; Blanchard, C.L. (2003). The Southeastern Aerosol Research and Characterization Study: Part 1 - Overview. *J. Air Waste Manage. Assoc.*, **53**(12): 1460-1471.

Huygen, C. (1963). The sampling of sulfur dioxide in air with impregnated filter paper. *Anal. Chim. Acta.*, **28**: 349-360.

IMPROVE (2011). Interagency Monitoring of Protected Visual Environments. prepared by National Park Service, Ft. Collins, CO, http://vista.cira.colostate.edu/IMPROVE

Japar, S.M.; Brachaczek, W.W. (1984). Artifact sulfate formation from SO_2 on nylon filters. *Atmos. Environ.*, **18**(11): 2479-2482.

Johnson, D.A.; Atkins, D.H.F. (1975). An airborne system for the sampling and analysis of sulphur dioxide and atmospheric aerosols. *Atmos. Environ.*, **9**(9): 825-829.

Joseph, D.B.; Metsa, J.C.; Malm, W.C.; Pitchford, M.L. (1987). Plans for IMPROVE: A federal program to monitor visibility in Class I areas. In *Transactions, Visibility Protection: Research and Policy Aspects*, Bhardwaja, P. S., Ed.; Air Pollution Control Association: Pittsburgh, PA, 113-125.

Kirchner, M.; Jakobi, G.; Felcht, E.; Bernhardt, M.; Fischer, A. (2005). Elevated NH3 and NO2 air concentrations and nitrogen deposition rates in the vicinity of a highway in Southern Bavaria. *Atmos. Environ.*, **39**(25): 4531-4542.

Krueger, B.J.; Grassian, V.H.; Cowin, J.P.; Laskin, A. (2004). Heterogeneous chemistry of individual mineral dust particles from different dust source regions: the importance of particle mineralogy. *Atmos. Environ.*, **38**(36): 6253-6261.

Laskin, A.; Wietsma, T.W.; Krueger, B.J.; Grassian, V.H. (2005). Heterogeneous chemistry of individual mineral dust particles with nitric acid: A combined CCSEM/EDX, ESEM, and ICP-MS study. *J. Geophys. Res. - Atmospheres*, **110**(D10): D10208. doi:10.1029/2004JD005206.

Lavery, T.F.; Rogers, C.M.; Baumgardner, R.; Mishoe, K.P. (2009). Intercomparison of Clean Air Status and Trends Network nitrate and nitric acid measurements with data from other monitoring programs. *J. Air Waste Manage. Assoc.*, **59**(2): 214-226.

Leppanen, S.; Anttila, P.; Lattila, H.; Makkonen, U. (2005). Long-term comparison of filter method and sensitive analyser in monitoring of sulphur dioxide. *Atmos. Environ.*, **39**(14): 2683-2693.

Lewin, E.E.; Zachau-Christiansen, B. (1995). Efficiency of 0.5 N KOH impregnated filters for SO_2 Collection. *Atmos. Environ.*, **11**: 861-862.

Liu, Y.J.; Zhu, T.; Zhao, D.F.; Zhang, Z.F. (2008). Investigation of the hygroscopic properties of Ca(NO3)(2) and internally mixed Ca(NO3)(2)/CaCO3 particles by micro-Raman spectrometry. *Atmos. Chem. Phys.*, **8**(23): 7205-7215.

MACTEC (2009). Clean Air Status and Trends (CASTNET) quality assurance project plan revision 6.0. prepared by MACTEC Engineering and Consulting, Inc., Gainesville, FL, http://epa.gov/castnet/javaweb/docs/qapp_v6_Main_Body.pdf

MACTEC (2010). Clean Air Status and Trends (CASTNET) 2008 annual report. prepared by MACTEC Engineering and Consulting, Inc., Gainesville, FL, http://epa.gov/castnet/javaweb/docs/annual_report_2008.pdf

Malm, W.C.; Pitchford, M.L.; Scruggs, M.; Sisler, J.F.; Ames, R.G.; Copeland, S.; Gebhart, K.A.; Day, D.E. (2000). Spatial and seasonal patterns and temporal variability of haze and its constituents in the United States: IMPROVE Report III. Report Number ISSN: 0737-5352-47; prepared by Cooperative Institute for Research in the Atmosphere, Colorado State University, Ft. Collins, CO, http://vista.cira.colostate.edu/IMPROVE/Publications/improve_reports.htm

Martins, J.J.; Dhammapala, R.S.; Lachmann, G.; Galy-Lacaux, C.; Pienaar, J.J. (2007). Long-term measurements of sulphur dioxide, nitrogen dioxide, ammonia, nitric acid and ozone in southern Africa using passive samplers. *South African Journal of Science*, **103**(7-8): 336-342.

Matsuda, Y.; Cahill, T.A. (1985). Alkali impregnated Teflon as a filter for atmospheric SO_2 PIXE analysis. *Nuclear Instruments and Methods in Physics Research*, **B6**: 574-584.

Meng, Z.Y.; Xu, X.B.; Wang, T.; Zhang, X.Y.; Yu, X.L.; Wang, S.F.; Lin, W.L.; Chen, Y.Z.; Jiang, Y.A.; An, X.Q. (2010). Ambient sulfur dioxide, nitrogen dioxide, and ammonia at ten background and rural sites in China during 2007-2008. *Atmos. Environ.*, **44**(21-22): 2625-2631.

Mosquera, J.; Monteny, G.J.; Erisman, J.W. (2005). Overview and assessment of techniques to measure ammonia emissions from animal houses: the case of the Netherlands. *Environ. Poll.*, **135**(3): 381-388.

Moumen, N.; Yi, S.M.; Raymond, H.A.; Han, Y.J.; Holsen, T.M. (2004). Quantifying the dry deposition of ammonia in ammonia-rich and ammonia-poor environments using a surrogate surface approach. *Atmos. Environ.*, **38**(17): 2677-2686. ISI:000221365200007.

Nishikawa, Y.; Murano, K.; Mukai, H. (2009). Comparison of sampling resistance for one to three sheets of membrane type passive sampler. *Water Air and Soil Pollution*, **197**(1-4): 241-247.

NOAA (2011). The Atmospheric Integrated Monitoring Network (AIRMoN). prepared by National Oceanic and Atmospheric Administration Air Resources Laboratory, Silver Springs, MD, http://www.atdd.noaa.gov/?q=node/46

Ooki, A.; Uematsu, M. (2005). Chemical interactions between mineral dust particles and acid gases during Asian dust events. *J. Geophys. Res. -Atmospheres*, **110**(D3)

Orr, D.B.; Hipfner, J.C.; Chan, W.H.; Lusis, M.A.; Hunt, J.E. (1967). The application of a passive permeation device for the measurement of ambient sulfur dioxide. *Atmos. Environ.*, **21**(6): 1473-1475.

Pennequin-Cardinal, A.; Plaisance, H.; Locoge, N.; Ramalho, O.; Kirchner, S.; Galloo, J.C. (2005). Performances of the Radiello((R)) diffusive sampler for BTEX measurements: Influence of environmental conditions and determination of modelled sampling rates. *Atmos. Environ.*, **39**(14): 2535-2544.

Plaisance, H.; Leonardis, T.; Gerboles, M. (2008). Assessment of uncertainty of benzene measurements by Radiello diffusive sampler. *Atmos. Environ.*, **42**(10): 2555-2568.

Ramadan, A.A. (2010). Air quality assessment in Southern Kuwait using diffusive passive samplers. *Environ. Mon. Assess.*, **160**(1-4): 413-423.

Ribas, A.; Penuelas, J. (2006). Surface ozone mixing ratio increase with altitude in a transect in the Catalan Pyrenees. *Atmos. Environ.*, **40**(38): 7308-7315.

Sickles, J.E., II; Hodson, L.L. (1999a). Retention of sulfur dioxide by nylon filters. *Atmos. Environ.*, **33**(15): 2427-2434.

Sickles, J.E., II; Hodson, L.L. (1999b). Short communication: Retention of sulfur dioxide by nylon filters. *Atmos. Environ.*, **33**: 2423-2426.

Sickles, J.E., II; Hodson, L.L.; Vorburger, L.M. (1999). Evaluation of the filter pack for long-duration sampling of ambient air. *Atmos. Environ.*, **33**(14): 2187-2202.

Sickles, J.E., II; Shadwick, D.S. (2002). Precision of atmospheric dry deposition data from the Clean Air Status and Trends Network. *Atmos. Environ.*, **36**(36-37): 5671-5686.

Sisler, J.F.; Malm, W.C.; Gebhart, K.A. (1996). Spatial and seasonal patterns and long-term variability of the haze in the United States: An analysis of data from the IMPROVE network. Report Number ISSN 0737-5352-32;

prepared by Cooperative Institute for Research in the Atmosphere, Ft. Collins, CO, vista.cira.colostate.edu/IMPROVE/Publications/improve_reports.htm

Smith, L. (2002). Analysis of commented vs. uncommented samples from the Clean Air Status and Trends Network (CASTNet). *Atmos. Environ.*, **36**(10): 1649-1653.

Spicer, C.W.; Schumacher, P.M. (1979). Particulate nitrate: Laboratory and field studies of major sampling interferences. *Atmos. Environ.*, **13**: 543-552.

Strandberg, B.; Sunesson, A.L.; Olsson, K.; Levin, J.O.; Ljungqvist, G.; Sundgren, M.; Sallsten, G.; Barregard, L. (2005). Evaluation of two types of diffusive samplers and adsorbents for measuring 1,3-butadiene and benzene in air. *Atmos. Environ.*, **39**(22): 4101-4110.

Strandberg, B.; Sunesson, A.L.; Sundgren, M.; Levin, J.O.; Sallsten, G.; Barregard, L. (2006). Field evaluation of two diffusive samplers and two adsorbent media to determine 1,3-butadiene and benzene levels in air. *Atmos. Environ.*, **40**(40): 7686-7695.

Sturaro, A.; Rella, R.; Parvoli, G.; Ferrara, D. (2010). Long-term phenol, cresols and BTEX monitoring in urban air. *Environ. Mon. Assess.*, **164**(1-4): 93-100.

Talbot, R.W.; Vijgen, A.S.; Harris, R.C. (1990). Measuring tropospheric HNO_3: Problems and prospects for nylon filter and mist chamber techniques. *J. Geophys. Res.*, **95**: 7553-7561.

Tsai, C.J.; Huang, C.H.; Lu, H.H. (2004). Adsorption capacity of a nylon filter of filter pack system for HCl and HNO3 gases. *Separation Science and Technology*, **39**(3): 629-643.

Umann, B.; Arnold, F.; Schaal, C.; Hanke, M.; Uecker, J.; Aufmhoff, H.; Balkanski, Y.; van Dingenen, R. (2005). Interaction of mineral dust with gas phase nitric acid and sulfur dioxide during the MINATROC II field campaign: First estimate of the uptake coefficient gamma(HNO3) from atmospheric data. *J. Geophys. Res. - Atmospheres*, **110**(D22)

Underwood, G.M.; Song, C.H.; Phadnis, M.; Carmichael, G.R.; Grassian, V.H. (2001). Heterogeneous reactions of NO_2 and HNO_3 on oxides and mineral dust: A combined laboratory and modeling study. *J. Geophys. Res.*, **106**(D16): 18055-18066.

Usher, C.R.; Al-Hosney, H.; Carlos-Cuellar, S.; Grassian, V.H. (2002). A laboratory study of the heterogeneous uptake and oxidation of sulfur dioxide on mineral dust particles. *J. Geophys. Res.*, **107**(D23): 4713. doi:10.1029/2002JD002051.

VIEWS (2010). Visibility Information Exchange Web System. prepared by Colorado State University, Ft. Collins, CO, http://vista.cira.colostate.edu/views/

Watson, J.G. (2002). Visibility: Science and regulation - 2002 Critical Review. *J. Air Waste Manage. Assoc.*, **52**(6): 628-713.

Zhang, L.; Vet, R.; O'Brien, J.M.; Mihele, C.; Liang, Z.; Wiebe, A. (2009). Dry deposition of individual nitrogen species at eight Canadian rural sites. *J. Geophys. Res. -Atmospheres*, **114**

Zhang, X.; McMurry, P.H. (1991). Theoretical analysis of evaporative losses of adsorbed or absorbed species during atmospheric aerosol sampling. *Enivron. Sci. Technol.*, **25**: 456-459.

Zhang, X.Q.; McMurry, P.H. (1987). Theoretical analysis of evaporative losses from impactor and filter deposits. *Atmos. Environ.*, **21**(8): 1779-1789.

Comments from Dr Kenneth Demerjian

The AMMS Panel is requested to respond to the following charge questions in regard to monitoring topics related to a potential secondary standard for oxides of NOx and Sox:

1. What are the Panel's views on using the CASTNET filter pack (FP) to measure particulate sulfate for the purpose of providing annual average values as an indicator for the NOx/SOx standard? – *This methodology should be consider as one of the several PM-SO4 techniques available (i.e. CSN, IMPROVE and continuous SO4) to track trends in PM_SO4. Although the network methodologies report measured concentrations that will not agree in absolute terms, demonstration of their consistency in reporting relative changes in ambient concentrations with respect to measured/estimated emission changes will be valuable in estimating uncertainty in trend analyses.*

2. What are the Panel's views on using the CASTNET filter pack (FP) to measure sulfur dioxide gas for the purpose of providing annual average values as an indicator for the NOx/SOx standard? – *Unlike PM-SO4 where particle size affects absolute concentration (see discussion item 1 above) comparisons, selected continuous SO2 measurements should be compared with annual CASTNET SO2 measurements as well as trends analyses to demonstration of consistency in reporting relative changes in ambient concentrations with respect to measured/estimated emission change.*

3. What are the panel's views on using existing NOy methods that are deployed, for example, in NCore as the measurement approach for NOy for the purpose of providing annual average values as an indicator for the NOx/SOx standard? - *Existing NOy measurement technology is adequate, but requires establishing more rigorous QA/QC procedures. This includes providing training for network technicians and the development of calibration standards and protocols for estimating convertor efficiency.*

4. What are the panel's views on using the emerging AMON ammonia monitoring network that uses passive sampling technology as a tool for evaluating air quality model behavior with respect to characterizing ambient air patterns of ammonia? – *There is very little documentation in the peer reviewed literature regarding the performance of the Radiello® passive samplers. Although NADP has adopted the technique, I am not aware of any significant performance evaluation or intercomparison studies with other NH3 monitoring techniques. Also, is the passive sampler sensitive to wind speed and temperature extremes? In addition, although two-week average data can be used to aggregate seasonal and annual average ammonia concentrations, these data are far from what is necessary to challenge air quality model behavior. It is unlikely that the deployment of sufficient number of samplers will be practical (cost or technically) to fully characterize the spatial distribution of ambient NH3 considering the complexity of its sources and sinks. Only high temporal resolution (minutes to hour) ambient NH3 measurements afford the opportunity to: 1) measure NH3 fluxes (to characterize local*

sources and sinks); 2) identify NH3 source plumes through wind sector analyses; and 3) characterize NH3 concentrations in the stable (typically nocturnal) boundary layer for the evaluation of AQ models and to assess the potential bias the SBL introduces to model - integrated sampling comparisons.

5. What are the Panel's views on using the CASTNET filter pack (FP) to measure ammonium ion as a tool for evaluating air quality model behavior with respect to characterizing ambient air patterns of ammonia? – *Models should use whatever data is available to test and evaluate their performance. That being said, I am not sure that CASTNET FP ammonium ion measurements would be effective in characterizing ambient air patterns of ammonia. If it has not already been done, an analysis of the SEARCH data set should provide some insight as to challenges this comparison poses given the distinctly different residence times of these two species.*

6. What are the panel's views on establishing a suite of NOy species measurements at 2- 5 locations in different atmospheric and ecological regions for the purpose of evaluating air quality model and NOy instrument behavior? – *I would be strongly supportive of such studies.*

7. What are the panel's views on utilizing the existing CASTNET and rural NCore networks as a starting infrastructure for the purpose of supporting the NOx/SOx standard? – *This would be a reasonable starting point.*

Comments from Mr Henry (Dirk) Felton

Dirk Felton: Preliminary Comments on the NOx/SOx Charge Questions for the CASAC AMMs committee. February 10, 2011

1. What are the Panel's views on using the CASTNET filter pack (FP) to measure particulate sulfate for the purpose of providing annual average values as an indicator for the NOx/SOx standard? Given EPA plans primarily to document the capability of the CASTNET FP and develop the FRM for particulate sulfate based on the existing information and procedures, what are the Panel's views of this approach for setting the FRM?

2. What are the Panel's views on using the CASTNET filter pack (FP) to measure sulfur dioxide gas for the purpose of providing annual average values as an indicator for the NOx/SOx standard? If EPA would document the capability of the CASTNET FP and develops an FRM for sulfur dioxide gas based on the existing information and procedures, what are the Panel's views of this approach for setting the FRM?

> **A CASTNET filter pack or one of the commercially available passive alternatives is likely to be superior to the SO_2 FRM in these relatively clean environments. It would make sense to compare the CASTNET filter pack, the currently available passive samplers and the FRM in winter and summer months to see which is most effective and cost efficient for this network.**

3. What are the Panel's views on using the current primary FRM (high time resolution UVF) to measure sulfur dioxide gas for the purpose of providing annual average values as an indicator for the NOx/SOx standard?

> **It is not clear that hourly SO_2 data is useful or even practical for this monitoring program. Most of the other data is collected on much longer time-frames and annual data is sufficient. The deposition from SO_2 is a little more significant than from particulate sulfate but the error associated with using a passive or filter pack SO_2 measurement instead of the current FRM in areas with low ambient concentrations is probably acceptable. Unfortunately, you need to have a working model before you can run sensitivity analysis on different inputs. It certainly would be appropriate to initiate the program with a less expensive passive SO_2 measurement and then require the FRM if becomes apparent that the increased accuracy is needed.**

A review of ambient SO_2 data collected with an FRM in the Adirondack Park region of New York State shows that for 2009 and 2010 data:

Site	Average (24-Hr data)	Max 24-Hr	Min 24-Hr
Piseco Lake	0.4 ppb	5.6 ppb	-0.2 ppb
Paul Smith's	0.6 ppb	4.5 ppb	0.0 ppb
Nick's Lake	0.6 ppb	5.3 ppb	-0.1 ppb
Whiteface Base	0.7 ppb	3.7 ppb	0.1 ppb

Site	Average (1-Hr data)	Max 1-Hr	Min 1-Hr
Piseco Lake	0.4 ppb	12.3 ppb	-0.3 ppb
Paul Smith's	0.6 ppb	9.9 ppb	-0.1 ppb
Nick's Lake	0.5 ppb	13.5 ppb	-0.1 ppb
Whiteface Base	0.7 ppb	17.5 ppb	-0.1 ppb

The average 2009 through 2010 SO_2 concentrations from the Piseco Lake site which is close to the center of Adirondack Park is barely twice the detection limit of the commercially available trace level SO_2 monitor. Operating the SO_2 FRM at these low concentrations is extremely difficult and the measurement uncertainty is certainly comparable to the expected differences in concentration from one site in this region to another.

4. (Fine, Felton) (a) What are the panel's views on using existing NOy methods that are deployed, for example, in NCore as the measurement approach for NOy for the purpose of providing annual average values as an indicator for the NOx/SOx standard?

The model development, refinement and comparison to changes in ANC over time are what will define the success or failure of the NOx/SOx secondary standard. The iterative process of determining where the model is working and where it is not should be used to specify which measurements need to be as precise as possible and which are less critical to model performance as compared to environmental outcomes.

The initial deployment of monitoring instrumentation for the measurement of the indicator must be done with the assumption that the indicator; NOy alone, may not

be adequate. Unlike most of the other NAAQS in which an indicator is correlated with a health outcome, the proposed NOy indicator for this standard is being used to measure the sum of air concentrations that lead to a net deposition velocity. It is likely that only a few of the primary components of NOy (NO, NO_2, HNO_3, P-NO_3 and PAN) will be primarily responsible for nitrogen deposition in different regions of the country. This creates a great deal of uncertainty because the NOy measurement has not been fully characterized for each of these species and the resulting dataset may not be adequate to advance our understanding of what components are primarily responsible for the deposition or for future SIP development.

The current NOy method should be deployed at a handful of sites in areas of the country where different gas and aerosol compositions exist and where weather patterns are significantly different. The collection of this data is necessary in order to initiate model development and to begin the initial sensitivity testing to determine if the NOy method really is adequate.

(b) What are the panel's views on EPA's assessment that additional study is needed before establishing an FRM based on the existing NOy methods? That is, are the methods already adequately demonstrated as a reference method to determine compliance with a NAAQS?

This question really should not be addressed until it is certain that the NOy measurement provides adequate data for use in support of the NOx/SOx secondary standard.

The EPA is correct that the NOy method needs additional evaluation before it should be considered to be eligible for FRM status. There are many issues that need to be addressed. The method must include a demonstration of conversion efficiencies for the expected suite of Nitrogen species in rural areas at all ambient and converter temperatures and with and without known interferences, a determination should be made of how long a converter lasts and if the converter efficiency changes over time for some species but not others, whether and what type of bug screen should be installed, and a determination should be made on a species by species basis of optimum inlet height.

It is advisable to optimize the method and to thoroughly document the recommendations prior to considering the method for FRM designation. Once an analyzer is designated as an FRM, it is more difficult to make needed changes.

(c) What are the panel's views on the research plan for establishing existing NOy methods as an FRM? [Note suggested improvement to the plan would be appreciated, particularly ones that would help complete the study on time.]

The EPA's research plan must be thorough and provide ample time for laboratory evaluation and for field demonstration. The ambient field demonstrations must include locations that encompass a wide range of gas and aerosol compositions including known interferents as well as a range of operator experience. Utilizing one site will not meet this need. Some of the issues that have come out of the preliminary NCore NOy operation have included questions about cold weather calibration, sample residence time between the converter and the analyzer and whether the transfer lines should be shielded from light. None of these are addressed in the research plan.

The EPA must resist the urge to quickly designate an FRM for NOy. The current method may or may not meet the intended data need and the designation of a poorly performing FRM will harm the ability of monitoring agencies to collect this data in the future.

5. What are the panel's views on using the emerging AMoN ammonia monitoring network that uses passive sampling technology as a tool for evaluating air quality model behavior with respect to characterizing ambient air patterns of ammonia?

The AMoN monitoring technology is promising and it should be used during the initial deployment of the NOx/SOx monitoring program. The data does show significant seasonal and spatial gradients and these patterns are critical to the understanding of the relationship between gas concentrations and deposition. The accuracy and precision of the method must be defined in representative regions and climates.

6. What are the panel's views on co-locating ammonia measurements at each location where the indictors are measured?

That of course depends on how many locations are chosen for the initial network. There must be enough monitors to reasonably describe the variation in ammonia concentration across each of the Eco-regions. This variability in ammonia concentrations may be less than the variability of some species of interest such as nitric acid but is likely to be greater than others such as NO and SO_2. It would be advantageous to conduct a thorough review of the data collected in the first year to determine the adequacy of the network for each of the monitored species. An analysis of the inter-site ammonia variability between monitors in relatively uniform eco-regions compared to the variability in non-uniform eco-regions should help.

7. What are the Panel's views on using the CASTNET filter pack (FP) to measure ammonium ion as a tool for evaluating air quality model behavior with respect to characterizing ambient air patterns of ammonia?

8. What are the panel's views on establishing a suite of NOy species measurements at 2- 5 locations in different atmospheric and ecological regions for the purpose of evaluating air quality model and NOy instrument behavior?

This is the kind of research that should have been completed prior to the development of the current monitoring proposal. This information is needed to determine if NOy is a suitable indicator for the NOx/SOx monitoring program. The individual species measurements are expensive and not at all straightforward to make so they should be restricted to just a few locations. The EPA should not expect all monitoring agencies to be capable of operating these complex and research grade instrumentation. The EPA may want to partner with monitoring agencies that have experience in making these measurements and can accomplish them in selected Eco-regions.

9. (Felton, McMurry) What are the panel's views on utilizing the existing CASTNET and rural NCore networks as a starting infrastructure for the purpose of supporting the NOx/SOx standard?

In general, neither the existing CASTNET nor rural NCore monitoring networks are suitable. Leveraging existing networks is not an acceptable alternative to providing necessary resources for air quality monitoring.

This question needs to first address what the appropriate infrastructure is for monitoring in support of this standard. Then the existing CASTNET, rural NCore, rural State and Local monitoring agency sites and IMPROVE sites can be evaluated in comparison to what is needed for each Eco-region. In some Eco-regions such as in the south-east there may be enough suitably located State and Local monitoring agency sites and CASTNET sites to provide a monitoring infrastructure to support this standard. In most of the other Eco-regions there are fewer CASTNET sites and more State and Local monitoring agency and IMPROVE sites. None of these networks alone can provide a sufficient infrastructure to support the NOx/SOx secondary standard.

The necessary infrastructure for the initial deployment of this network for each of the large Eco-regions should include an adequate water quality monitoring program, none or one fully implemented NCore type of sites as well as a 3-6 passive satellite monitors that provide a subset of measurements in areas where air concentrations are expected to differ. The sites should be located so that the target air quality measurements are:

1. **Near moderately impacted water bodies: Severely impacted water bodies may not show improved ANC due to air quality improvements over the time scale of the next NAAQS review due to other considerations such as geologic conditions. Water bodies with minor ANC degradation may show improvements that are too small to detect over the interval between NAAQS reviews.**

2. **Away from significant point sources and eco-region boundaries: The sites should represent as large an area with reasonably uniform air quality as possible.**

The satellite sites should be selected to help discern how large an area the central Eco-region monitor actually represents. Altitude, proximity to upwind sources and meteorological patterns affected by valleys and upslope or down slope conditions will all reduce the representativeness of central site measurements. The subset of

parameters monitored at the satellite sites should be selected because they significantly contribute to model uncertainty due to changes in air quality over the Eco-region.

The CASTNET network sites should be considered for use as satellite monitors if their location and measurements are suitable for the monitoring necessary in an Eco-region. The actual operation and management of the site may have to be undertaken by the responsible State and Local monitoring agency. Long-term monitoring in support of a NAAQS cannot be undertaken by a contractor. These networks must operate for long periods without the possibility for sudden shutdowns or data quality variability due to changes in contractors or budgets.

The rural NCore sites are better suited to serve as primary monitors or satellite monitors for this network but the number of these sites is very limited. Consideration should be given to relocating a rural NCore site to meet NCore and NOx/SOx monitoring objectives if the expenses in such a move are less than the cost of establishing another stand alone site. One advantage to considering this now is that the NCore sites are new and do not have a long data record.

10. What are the panel's views on using CASTNET filter pack (FP) to measure total nitrate (particulate nitrate plus nitric acid) as the measurement approach for the purpose of providing annual average values to support the NOx/SOx standard in diagnosing NOy instrument behavior and assist in delineating the relative fractions of contributing oxidized nitrogen species to total ambient oxidized nitrogen.

What are the Panel's views on using the CASTNET filter pack (FP) to measure total nitrate for the purpose of providing annual average values as a surrogate indicator for the NOx/SOx standard? If EPA would document the capability of the CASTNET FP and develops an FRM for total nitrate based on the existing information and procedures, what are the Panel's views of this approach for setting the FRM?

In general, neither the existing CASTNET nor rural NCore monitoring networks are suitable. Leveraging existing networks is not an acceptable alternative to providing necessary resources for air quality monitoring.

This question needs to first address what the appropriate infrastructure is for monitoring in support of this standard. Then the existing CASTNET, rural NCore, rural State and Local monitoring agency sites and IMPROVE sites can be evaluated in comparison to what is needed for each Eco-region. In some Eco-regions such as in the south-east there may be enough suitably located State and Local monitoring agency sites and CASTNET sites to provide a monitoring infrastructure to support this standard. In most of the other Eco-regions there are fewer CASTNET sites and more State and Local monitoring agency and IMPROVE sites. None of these networks alone can provide a sufficient infrastructure to support the NOx/SOx secondary standard.

The necessary infrastructure for the initial deployment of this network for each of the large Eco-regions should include 1-3 fully implemented NCore type of sites as well as a 3-6 satellite monitors that provide a subset of measurements in areas where air concentrations are expected to differ. The fully implemented sites should be located so that they are:

1. **Near moderately impacted water bodies: Severely impacted water bodies may not show improved ANC due to air quality improvements over the time scale of the next NAAQS review due to other considerations such as geologic conditions. Water bodies with minor ANC degradation may show improvements that are too small to detect over the interval between NAAQS reviews.**

2. **Away from significant point sources and eco-region boundaries: The sites should represent as large an area with reasonably uniform air quality as possible.**

The satellite sites should be selected to help discern how large an area the central Eco-region monitor actually represents. Altitude, proximity to upwind sources and meteorological patterns affected by valleys and upslope or down slope conditions will all reduce the representativeness of the central site measurements. The subset of parameters monitored at the satellite sites should be selected because they significantly contribute to model uncertainty due to changes in air quality over the Eco-region.

The CASTNET network sites should be considered for use as satellite monitors if their location and measurements are suitable for the monitoring necessary in an Eco-region. The actual operation and management of the site may have to be undertaken by the responsible State and Local monitoring agency. Long-term monitoring in support of a NAAQS cannot be undertaken by a contractor. These networks must operate for long periods without the possibility for sudden shutdowns or data quality variability due to changes in contractors or budgets.

The rural NCore sites are better suited to serve as primary monitors but can also serve as satellite monitors for this network but the number of these sites is very limited. Consideration should be given to relocating a rural NCore site to meet NCore and NOx/SOx monitoring objectives if the expenses in such a move are less than the cost of establishing another stand alone site. One advantage to considering this now is that the NCore sites are new and do not have a long data record.

11. What are the panel's view of the broader consideration of using CASTNET, complemented by rural NCore, to serve as a framework for the nation's rural monitoring of important gases and aerosols in support of secondary standards and evaluating the behavior of regional air quality models?

Some State and Local monitoring agencies are not going to be comfortable with CASTNET assuming a role in monitoring for comparison to a NAAQS. CASTNET management has not demonstrated concern with State and Local monitoring agency objectives and in fact has been counterproductive in some instances. The nature of the for-profit contractor as a responsible element of a long-term compliance monitoring program is not reasonable. Additionally, monitoring agencies need to have the flexibility to add sites or parameters as needed to address future modeling uncertainties and eventually to address options for SIPs.

It is likely that some of the CASTNET measurement methods may be appropriate for use in the secondary NOx/SOx monitoring network. These methods should be made available on a national contract basis similar to the way the air toxics analyses can be obtained for the EPA NATTs program. This will permit monitoring agencies to utilize these methods at any of the existing or new monitoring sites that are selected for this network.

Comments from Dr Philip Fine

From: Philip Fine

To: Dirk Felton

Cc: Edward Hanlon/DC/USEPA/US@EPA

Date: 02/08/2011 01:57 PM

Subject: RE: Question 4 - preliminary response

I agree with most of your comments in general, especially those on the FRM designation. That has to be done carefully in many areas of the country and needs to fully characterize all the sampling artifacts, losses, parameters, calibration and auditing issues, etc. It is one thing to require it for NCore or PAMS as an exploratory tool or to help in modeling. It is quite another thing to make it an FRM to which all subsequent, and probably better, measurements will have to struggle to match (sound familiar?).

I'm a little more positive on the use of NOy in the overall sampling scheme. No one should be pretending that the proposed combined calculation is anything more than a rough indicator that doesn't cover every important species. Since NOy is similarly a rough indicator, I don't have a problem using it as long as everyone is aware of these issues.

I know this isn't in official preliminary comment language or format, but I'm not sure I will be able to produce much more this week.

Philip M. Fine, Ph.D.

Comments from Dr Philip Hopke

It is somewhat difficult to respond to the charge questions since the form and ranges of the levels of a proposed secondary standard are not clear in Chapter 2 of the PA, the only chapter sent to us. Tuesday's discussions by the panel will be very helpful in setting the context in which measurements are needed. I will attempt to address the questions related to ammonia measurements as it is difficult to discuss the value of collocating a sampler without some background on the samplers themselves. Thus, I will address the following questions:

6. What are the panel's views on using the emerging AMoN ammonia monitoring network that uses passive sampling technology as a tool for evaluating air quality model behavior with respect to characterizing ambient air patterns of ammonia?

7. What are the panel's views on co-locating ammonia measurements at each location where the indictors are measured?

8. What are the Panel's views on using the CASTNET filter pack (FP) to measure ammonium ion as a tool for evaluating air quality model behavior with respect to characterizing ambient air patterns of ammonia?

It should be noted that these are numbered differently in the Charge Questions memo from that in the Draft Agenda.

Response to Question 6

Although the NADP has been using these samplers since November 2007 at multiple stations, I was unable to find comparison or evaluation data. The initial studies appear to show that the sampler had adequate precision and accuracy for making such measurements, but it is not clear what the field experience has been. It would have been helpful if some evaluative material had been provided. Given that they said that "The National Atmospheric Deposition Program will evaluate all of the results, and consider whether this special study will become a full standing network within the NADP system. This decision should be considered in the Winter, 2009" and it is now 2011, one would have hoped for documentation since from the data that can be downloaded from the NADP site, they have continued to collect samples through at least last summer. Thus, it is somewhat difficult to fully assess the success of the AMoN trials of the diffusion sampler. The precision values that were available looked good, but there was no

obvious accuracy data that I could find. Thus, there has been inadequate information provided to permit us to assess the AMoN effort.

Response to Question 7

It is clearly highly advantageous to have good ammonia data at every station if there are appropriate integrating monitors available with sufficient accuracy and precision. There needs to be a DQO effort to define how good the ammonia has to be to permit ion balances to be adequately estimated from the set of measured species. As the principal basic gas in the atmosphere, it is important to have better data on the concentrations and spatial variation across the US.

Charge question 8.

Clearly the CASNET filter pack can be modified to have a citric acid impregnated filter in the FP along with the base-treated filter to get the acid gases. There is a potential problem of volatilization of ammonia from the initial filter that collects the particulate ammonium nitrate that could lead to an overestimated value of gaseous ammonia. It would seem sensible to do a side-by-side comparison between the AMoN diffusion sampler against another filter in the CASNET FP. Then through a DQO process, the performance and cost of the samplers can be assessed and an appropriate choice made.

NADP Ammonia Measurements

I talked to David Gray of the NADP program about their AMoN experience. They tested Ogawa badges, the UK ALPHA sample (see attached), the Radiello sample, and a standard denuder sampler. They deployed three samplers of each type for 2 week periods. They found poor precision with the Ogawa badge and dropped them earlier in the study. The Radiello sampler was very simple to use, very hard to contaminate, but somewhat more expensive. The UK sampler also showed good precision and was less expensive, but was a bit more likely to be contaminated if not handled carefully. They are in the final stages of preparing a manuscript to submit for publication at which time he will share the submitted version.

UK Pollutant Deposition

The UK Pollutant Deposition site provides UK information on atmospheric deposition, and is supported by Defra and the UK Devolved Administrations.

Methodologies for Measuring Ammonia, Trace Gases and Aerosols

Measuring Concentrations of Atmospheric Trace gases and aerosols

The CEH DELTA (**DE**nuder for **L**ong-**T**erm **A**tmospheric sampling) system is a low-cost diffusion denuder system that was originally developed for long-term sampling of ammonia and ammonium (Sutton et al. 2001a), and which has also been tested for long-term sampling of acid gases (HNO3, HONO, HCl, SO2) and aerosols (NO3- NO2-, Cl-, SO42-) (Tang et al. 2008 The system is based around the concept of a single bore glass denuder for sampling trace gases (Ferm 1979). When a laminar air stream passes through the denuder coated on the insid with an acid coating such as citric acid, ammonia is captured by the acid walls (to be later extracted in the laboratory), while aerosols pass through and can be collected by aerosol filters placed downstream of the denuder. Conversely, an alkaline coating (e.g. K2CO3) on the denuders will collect acid gases such as HNO3, HONO, SO2 and HCl. The separation of aerosol gaseous components is achieved due to the much more rapid diffusion of gaseous species to the tube wall compared with that of particles.

The DELTA system is tuned for monthly sampling, but shorter and longer periods are also possible, depending on ambient concentrations (e.g. 1 week - 3 months). Stable sampling rates 0.3-0.4 l min-1 are achieved using a piston air pump (or other types of air pump in conjunction with a rotameter), with air volumes being measured by a high sensitivity dry gas meter. The l sampling rate means that short glass denuders (10 - 15 cm in length, optimum length to achiever greater than 99 % capture for the gas of interest) can be used, which allows easy exchan of samples through the post. A simple enclosure is used, which can be mounted easily in the desired location. At some sites, where the interest is in sampling of NH3 / NH4+ only, monitori may be made via a sampling line in a protected cabin. In this case, the same enclosure is used, but mounted on a desk or wall rather than mounted outside on a pole. When sampling via a inlet tube, the inlet tube should be made of polyethylene (0.5 mm id) and preferably < 2 m long. For sampling HNO3 gas, since it is a sticky gas, sampling must be direct from the atmosphe or loss of HNO3 will incur to inlet lines. The design of the monitoring equipment is shown in **Figure 1**.

To sample NH3 gas, the glass denuder tubes are coated internally with citric acid, which gives a visible layer of coating on the tubes, allowing a visual QA check on prepared denuder. Th post-denuder filters for the analysis of NH4+ aerosol are coated also with citric acid. To establish capture efficiency, the DELTA system uses 2 denuders for every sample. Two borosilicat glass denuders (10 cm long, 10 mm O.D, 6 mm I.D) are connected in series as shown in **Figure 1**. To enable a fully developed laminar flow, a short 2.3 cm glass tube (not coated) is connected to the front end. The different tube sections are joined by silicone tubing, and provided with two polyurethane caps for sealing before and after sampling. The two parts may be folded over, utilizing a silicone junction, during posting.

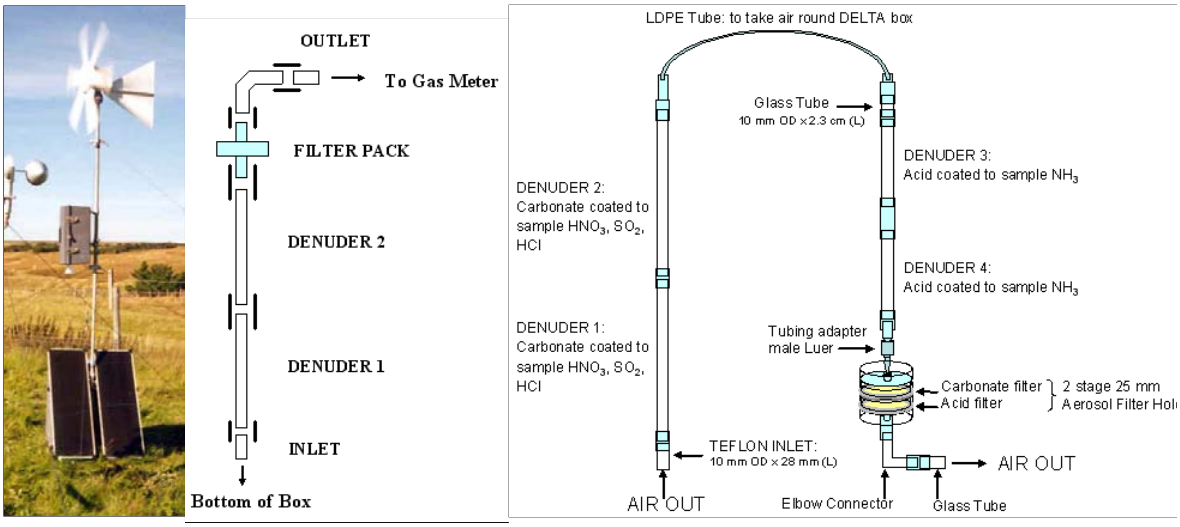

Figure 1: *Mounting of the DELTA sampling enclosure (left), sampling train for NH3/NH4 (middle) and full sampling train for all species (right)*

The sampling train used for sampling acid gas and aerosols, plus NH3/NH4+ is also shown in **Figure 1**. HNO3, SO2 and HCl are removed by the first set of K2CO3 / glycerol coated denuders, and a second set of citric acid coated denuders removes NH3. Two sets of coated filter papers in a 2-stage filter pack at the end of the sampling train collects aerosol componer The first filter is impregnated with K2CO3 / glycerol to sample aerosol NO3-, SO42-, Cl- plus the base cations Na+, Ca2+ and Mg2+, followed by a citric acid coated paper to sample aeros NH4+ . The use of 2 denuders in series allows for the detection of any breakthrough from the first denuder; the data from the second denuder are used for quality control and quality assurance.

References

Ferm, M., 1979, Method for determination of atmospheric ammonia. Atmos. Environ., 13, 1385-1393

Sutton M.A., Tang Y.S., Miners B. and D. Fowler (2001a) A new diffusion denuder system for long term, regional monitoring of 5atmospheric ammonia and ammonium. Water, Air and Soil Pollution. Focus, 1, 5/6, 145 156.

Tang Y.S, N. van Dijk, M. Anderson, I. Simmons, R. I. Smith, E. Armas-Sanchez, H. Lawrence & M.A. Sutton. (2008) Monitoring of nitric acid, particulate nitrate and other species in the UK 2007. Interim report under the UK Acid Deposition Monitoring Network to NETCEN/DEFRA.

Ammonia sampling system (Diffusion Tubes and ALPHA samplers)

In the first phase of the NAMN, the performance of 35 mm path length membrane diffusion tube (Figure 2) was improved to permit reliable monthly measurements down to a level of c. 1 µg (Sutton et al. 2001b). In the second phase of the network, an improved high sensitivity passive method, the CEH ALPHA (Adapted Low-cost Passive High Absorption) sampler (Figure 2) w applied in the network (Tang et al. 2001). Compared with the diffusion tube sampler, the ALPHA method shows an improvement of precision and detection limits by a factor of ~ 20, with a detection limit of c. 0.02 µg m-3 for monthly sampling. In May 2000, the diffusion tube method was replaced by the new improved ALPHA sampler across the NAMN. At 13 sites across the NAMN, both ALPHA and active denuder sampling measurements are made in parallel to provide an ongoing calibration and assessment of the passive method against the reference DEL method.

DIFFUSION TUBE **ALPHA SAMPLER**

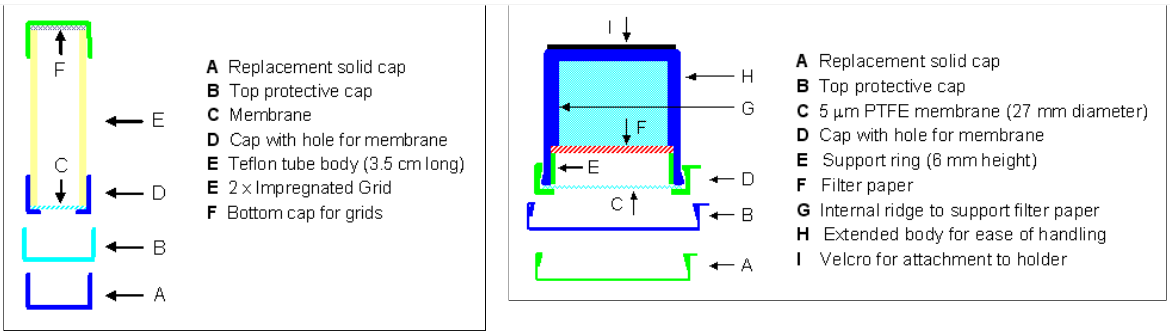

***Figure 2**: Diagram of a single membrane diffusion tube and a single ALPHA sampler.*

The passive sampling system consists of three replicate ALPHA samplers attached by the use of velcro to an aerodynamically shaped support (upturned frisbee or plant saucer) on a pole post at about 1.5 m height above ground. Aluminium sheet cut into strips are mounted ontop to deter birds from perching. Replicate tubes are used in order to give a more reliable estimatic the air concentration of ammonia.

References:

Sutton M.A., Miners B., Tang Y.S., Milford C., Wyers G.P., Duyzer J.H. and Fowler D. (2001b) Comparison of low-cost measurement techniques for long-term monitoring of atmospheric ammonia. J. Env. Monit., 3, 446-453.

Tang, Y.S., Cape, J.N. and Sutton, M.A. (2001b). Development and types of passive samplers for NH3 and NOx. In Proceedings of the International Symposium on Passive Sampling of Gaseous Pollutants in Ecological Research. TheScientificWorld, 1, 513-529.

Attachment	Size
Sutton et al 2001 (pdf)	229.07 KB

Centre For Ecology And Hydrology, on behalf of the UK Department for Environment, Food & Rural Affairs and the Devolved Administrations

National Atmospheric Deposition Program

Passive Ammonia Monitoring Network (AMoN)

A Special Pilot Network

The Importance of Ammonia

Ammonia (NH_3) is a gas readily released into the air from a variety of biological sources, as well as from industrial and combustion processes. It is the principal basic gas in the atmosphere. While NH_3 has many beneficial uses, it can detrimentally affect the quality of the environment, including the acidification and eutrophication of natural ecosystems, the associated loss of biodiversity, and the formation of secondary particles in the atmosphere.

The dominant source of NH_3 emissions in the U.S. is agriculture (~85%), largely from animal waste and commercial fertilizer application. Data from the National Atmospheric Deposition Program/National Trends Network (NADP/NTN), a 30+ year wet deposition network with over 250 sites across the U.S., has shown an increasing trend in ammonium (NH_4^+) concentration in the central U.S. (Figure 1). Yet, despite its importance in atmospheric chemistry and its impacts on ecosystems, until now there has been no routine national monitoring of ambient NH_3. The NADP has established a special study to determine the feasibility of operating a routine, long-term passive NH_3 network.

The pilot network, the NADP's passive NH_3 monitoring network, the AMoN, has been operating for over 2 years at approximately 20 locations. The AMoN provides land managers, air quality modelers, ecologists and policymakers critical data that will allow them to:

- *assess the long-term trends in ambient NH_3 concentrations and deposition of reduced nitrogen species;*
- *validate atmospheric models;*
- *better estimate total nitrogen inputs to ecosystems;*
- *assess changes in atmospheric chemistry due to SO_2 and NO_x reductions; and*
- *assess compliance with $PM_{2.5}$ standards*

The AMoN Network

The AMoN began operation in the fall of 2007 with 16 sites; four more were added in 2009 and another two sites are expected to begin operating in the summer of 2010. Additional sites are encouraged to join.

Figure 1 Ammonium Concentration as Measured at NTN Sites (1994 and 2008)

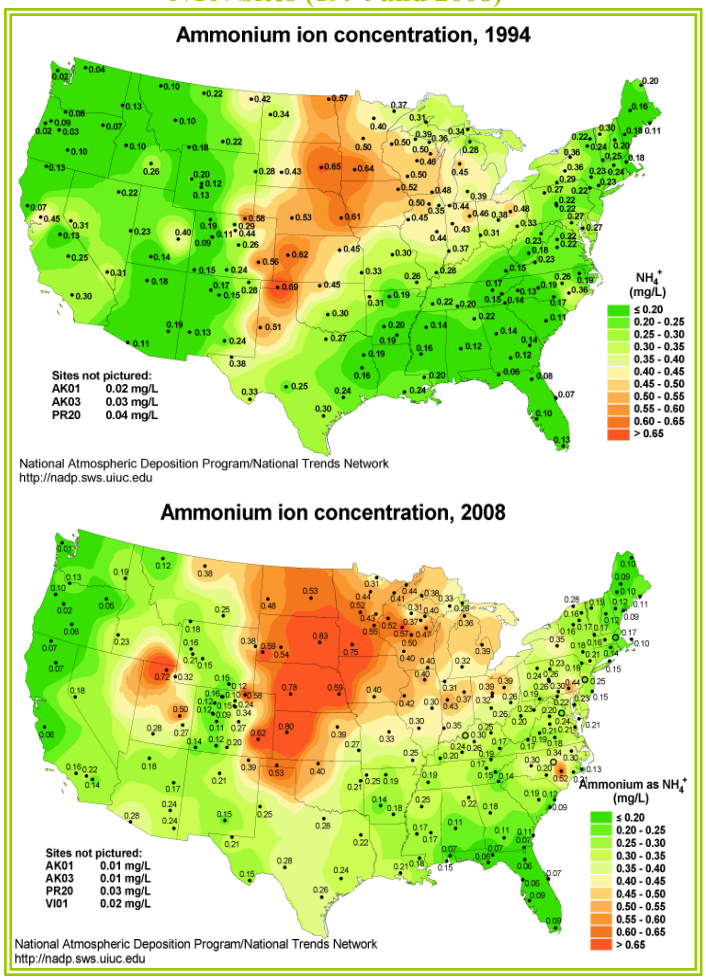

The NADP's Central Analytical Laboratory (CAL) assembles and ships the Radiello® passive samplers, which are deployed every 2 weeks at each site. The CAL analyzes and quality assures the samples and provides the analytical data to the NADP. The site map (Figure 2) includes active and inactive sites and sites that have agreements in place and will begin sampling soon (labeled as active). The map also shows modeled NH_3 emissions from the Carnegie Mellon Emissions model (http://www.cmu.edu/ammonia/).

Figure 2 AMoN Site Map

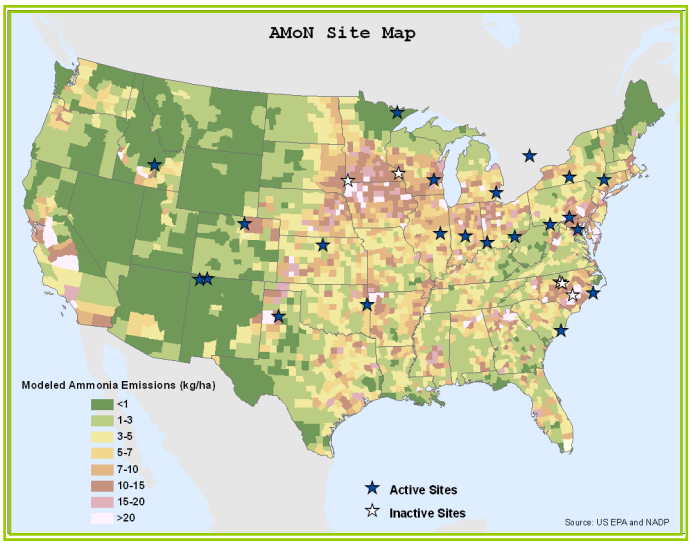

How You Can Start an AMoN Site

The NADP Program Office (PO) coordinates participation in the AMoN and provides the necessary materials. The AMoN uses Radiello® passive samplers (http://www.radiello.com) which do not require electricity, a data logger, or a computer. Provided that the area meets the minimal AMoN siting criteria, the site can be installed almost anywhere. An example of the site set-up is shown in Figure 3. After installation, the site operator submits photos of the site to the PO for approval.

Figure 3 Site Installation Diagram

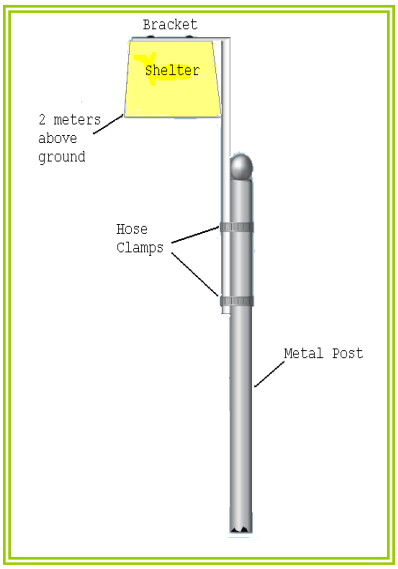

All site operators comply with the Standard Operating Procedure for Monitoring Ambient Ammonia Using Radiello-Type Passive Samplers which is posted on the NADP website. The operator changes out the sampler(s) every other Tuesday (see Figure 4) and ships the samplers back to the NADP. The total time commitment of the site operator is approximately 30 minutes at the site every two weeks. Bi-annually the operator will be asked to complete a checklist about their site. Annually, the site operator will submit photos of their site to the PO. The checklist and the site photos will help the PO determine if the site continues to meet the AMoN siting criteria and to document any changes to the site.

Figure 4 AMoN Sampler Change-out

The AMoN data are posted to a dedicated website, and includes site specific information. The data will be treated with the same quality control and public availability as the other NADP networks. A confidence interval will be provided for each NH_3 concentration based on the precision of triplicate samplers being shipped to 5 percent of the network each sampling time period.

What An AMoN Site Costs

The annual cost of participating in the network is estimated to be **$2,700** per site/year. A site installation kit is required ($250). The annual cost is subject to the number of participating sites. Current costs are available from the Program Office. This annual cost includes site supplies (passive samplers), shipping to and from the site, sample analysis, quality assurance activities, database and website management and laboratory supplies. In addition, the NADP will produce annual maps for both the AMoN website and the annual report using the data from sites which meet the completeness criteria. As the network grows, the cost per site is expected to decrease. The cost will be evaluated each year by the NADP's Budget Advisory Committee.

The Future of the AMoN

Future plans for the AMoN include:

- *approval of AMoN by Executive Committee at the fall 2010 NADP meeting as an official network;*
- *growing the network to 300+ sites, covering all sensitive ecoregions of the continental U.S.;*
- *utilizing the measured NH_3 concentrations for validation of air quality and deposition models; and*
- *providing educational outreach materials highlighting the hands-on experience in atmospheric science that students can receive by participating in AMoN.*

If you are interested in participating in the AMoN, please contact the NADP at (217) 333-7871. For more information about the AMoN, visit the AMoN website at http://nadp.isws.illinois.edu/nh3net.

Comments from Dr. Daniel Jacob

Preliminary comments on AMMS charge questions – Daniel Jacob

1. What are the Panel's views on using the CASTNET filter pack (FP) to measureparticulate sulfate for the purpose of providing annual average values as an indicator for the NOx/SOx standard? Given EPA plans primarily to document the capability of the CASTNET FP and develop the FRM for particulate sulfate based on the existing information and procedures, what are the Panel's views of this approach for setting the FRM?

I think that it is an appropriate method. The FP is a well-established method for reliable sulfate measurements. Weekly temporal resolution is fine – higher would be overkill. The CASTNET FP only measures the <2.5um fine fraction, and the coarser fraction makes a significant contribution to sulfate deposition. However, using a measurement integrating all sizes would just complicate interpretation of the relative contribution of coarse vs. fine in the measurement. Better to just measure the fine fraction and use a model- or observation-derived correction factor to add the relevant contribution of the coarse fraction (excluding sea salt and soil dust).

2. What are the Panel's views on using the CASTNET filter pack (FP) to measure sulfur dioxide gas for the purpose of providing annual average values as an indicator for the NOx/SOx standard? If EPA would document the capability of the CASTNET FP and develops an FRM for sulfur dioxide gas based on the existing information and procedures, what are the Panel's view of this approach for setting the FRM?

An issue with SO2 is the large diurnal variation that correlates with deposition velocity. The diurnal amplitude for SO2 is much larger than for sulfate and matters more since SO2 makes a much bigger contribution to SOx dry deposition than sulfate. This complicates the interpretation of weekly measurements. Hourly measurement by the primary FRM would be much better. If cost is an issue with using the primary FRM, then perhaps the primary FRM could be used to inform the general diurnal pattern of SO2 concentrations needed to interpret the weekly measurements.

3. What are the Panel's views on using the current primary FRM (high time resolution UVF) to measure sulfur dioxide gas for the purpose of providing annual average values as an indicator for the NOx/SOx standard?

I think that this would be much better than the FP because the hourly resolution is important for SO2 (cf. comment on question 2).

4. What are the panel's views on using existing NOy methods that are deployed, for example, in NCore as the measurement approach for NOy for the purpose of providing annual average values as an indicator for the NOx/SOx standard? What are the panel's views on EPA's assessment that additional study is needed before establishing an FRM based on the existing NOy methods? That is, are the methods already adequately demonstrated as a reference method to determine compliance with a NAAQS? What are the panel's views on the research plan for establishing existing NOy methods as an FRM? [Note suggested improvement to the plan would be appreciated, particularly ones that would help complete the study on time.]

Instruments to measure total NOy have been compared successfully in the past to the sum of measurements of individual species. This is amply documented in the literature. However, the NOy measurement is finicky on a number of accounts: (1) inlet losses for HNO3, (2) particle size cut for nitrate, (3) positive interference from reduced N species. Because of this, EPA should be very prudent before selecting a FRM. The HEASD plan for establishing the FRM reliability of NOy measurement methods seems reasonable. I recommend that validation campaigns be done for both summer and winter because of the change in NOy speciation. There is a lot of expertise in the research community in testing the reliability of NOy instruments and I recommend that David D. Parrish (NOAA/ESRL) be asked to comment on the HEASD plan. The NOAA/ESRL lab has considerable expertise that could be tapped in advising EPA on high-quality measurements of NOy species and total NOy. The research community also conducts regular intensive campaigns at surface sites measuring a suite of NOy species as well as total NOy (Harvard Forest in Massachusetts, PROPHET in Michigan, Niwot Ridge in Colorado, Blodgett Forest in California come to mind). It may be advisable to test the NOy instrument considered as FRM as part of these campaigns.

5. What are the Panel's views on using the CASTNET filter pack (FP) to measure total nitrate for the purpose of providing annual average values as a surrogate indicator for the NOx/SOx standard? If EPA would document the capability of the CASTNET FP and develops an FRM for total nitrate based on the existing information and procedures, what are the Panel's views of this approach for setting the FRM?

To my knowledge the FP method can measure total nitrate very reliably. From the standpoint of deriving a dry deposition flux, however, it makes of course tremendous difference whether that nitrate is present as HNO3 or particulate nitrate. But that is a general issue with the use of unspeciated measurements to infer a NOy dry deposition flux. There are very strong vertical gradients of HNO3 in the lower few tens of meters, so that a having a standard above-canopy altitude is essential for all measurements in the network.

6. What are the panel's views on using the emerging AMoN ammonia monitoring network that uses passive sampling technology as a tool for evaluating air quality model behavior with respect to characterizing ambient air patterns of ammonia?

I have no expertise on the quality of the measurement. My understanding is that it would have weekly resolution, which I would find difficult to interpret in the absence of information on diurnal variations in ammonia. I would expect these diurnal variations to be large and complex depending on whether the local area is a significant ammonia source or not.

7. What are the panel's views on co-locating ammonia measurements at each location where the indictors are measured?

That seems like a good idea considering the importance of model-derived L(NHx) in setting the standard. One should being able to evaluate the model ammonia at the locations where compliance with the standard is determined.

8. What are the Panel's views on using the CASTNET filter pack (FP) to measure ammonium ion as a tool for evaluating air quality model behavior with respect to characterizing ambient air patterns of ammonia?

FP ammonium measurements are subject to condensation/volatilization biases. In addition, ammonium concentrations do not provide a good test of model ammonia because under acid-neutralized conditions they are actually determined by the supply of sulfate and nitrate. I think that it would be a better idea to have a FP measurement of total ammonia+ammonium (NHx), which would be more reliable and more useful to test model ammonia sources.

9. What are the panel's views on establishing a suite of NOy species measurements at 2- 5 locations in different atmospheric and ecological regions for the purpose of evaluating air quality model and NOy instrument behavior?

Once the reliability of the NOy instrument has been established (HEASD proposal) I don't see much point in continuing to evaluate its behavior. Measuring NOy speciation is very important for evaluating air quality models but this is already done at some research sites (see comment 4). The EPA might consider coordinating with researchers at these sites. The research sites are mainly in relatively remote areas and the EPA might consider focusing on more polluted sites, such as the Supersites.

10. What are the panel's views on utilizing the existing CASTNET and rural NCore networks as a starting infrastructure for the purpose of supporting the NOx/SOx standard?

Existing sites should be used as much as possible but may not provide the coverage necessary, for example in the upper Midwest. It seems to me that the geographical monitoring needs for the NOx/SOx standard should first be determined independently, and then leveraged against existing sites.

11. What are the panel's views on using CASTNET filter pack (FP) to measure total nitrate (particulate nitrate plus nitric acid) as the measurement approach for the purpose of providing annual average values to support the NOx/SOx standard in diagnosing NOy instrument behavior and assist in delineating the relative fractions of contributing oxidized nitrogen species to total ambient oxidized nitrogen.

What would really help are FP measurements of speciated HNO3 and aerosol nitrate, rather than total nitrate. These are available from CASTNET. See comment 5.

12. What are the panel's view of the broader consideration of using CASTNET, complemented by rural NCore, to serve as a framework for the nation's rural monitoring of important gases and aerosols in support of secondary standards and evaluating the behavior of regional air quality models?

These are great sites for evaluating air quality models because they are generally not affected by local (and often fluctuating) sources for which models may have little simulation capability. The flip side of course is that they do not provide information for areas most likely to be affected by excessive deposition.

Comments from Dr. Peter H. McMurry

(NOTE: I have not provided answers to questions that were not assigned to me and for which other Committee members have more authoritative first-hand experience. I have read the preliminary comments that were posted on line on 2/11/11, and I think many good points have been made.)

1. What are the Panel's views on using the CASTNET filter pack (FP) to measure particulate sulfate for the purpose of providing annual average values as an indicator for the NOx/SOx standard? Given EPA plans primarily to document the capability of the CASTNET FP and develop the FRM for particulate sulfate based on the existing information and procedures, what are the Panel's views of this approach for setting the FRM?

> **I wonder if it might not be preferable to use a sampler with a 2.5 µm inlet to ensure compatibility with data from other networks? Also, do model predictions of sulfates focus largely on fine particlulate sulfate? If so, then measurements carried out with a 2.5 µm cut would ensure fidelity between models and measurements. I believe this is an important consideration if the the sampling and analytical uncertainties for sulfates are smaller than the incremental sulfate associated with coarse particles.**

2. What are the Panel's views on using the CASTNET filter pack (FP) to measure sulfur dioxide gas for the purpose of providing annual average values as an indicator for the NOx/SOx standard? If EPA would document the capability of the CASTNET FP and develops an FRM for sulfur dioxide gas based on the existing information and procedures, what are the Panel's views of this approach for setting the FRM?

> **If long term measurements have verified that FP SP2 provides an accurate measurement of the annual average, then I think this is a cost-effective solution to meeting this objective.**

3. What are the Panel's views on using the current primary FRM (high time resolution UVF) to measure sulfur dioxide gas for the purpose of providing annual average values as an indicator for the NOx/SOx standard?

As was pointed out by a Committee Member, average SO2 concentrations at some locations may be only slightly above the minimun detection level for UVF SO2 monitors. If such cases, the UVF SO2 monitor would not provide accurate annual average values, although it presumably could show that annual average values were well below requirements of the standard. Is there the potential that a passive sampler could provide more accurate long-term average values? If so, this would be a more cost-effective solution.

4. (Fine, Felton) (a) What are the panel's views on using existing NOy methods that are deployed, for example, in NCore as the measurement approach for NOy for the purpose of providing annual average values as an indicator for the NOx/SOx standard?

(b) What are the panel's views on EPA's assessment that additional study is needed before establishing an FRM based on the existing NOy methods? That is, are the methods already adequately demonstrated as a reference method to determine compliance with a NAAQS?

It seems clear to me that more work needs to be done to establish capabilities and limitations of the NOy instruments before they are set as FRMs.

(c) What are the panel's views on the research plan for establishing existing NOy methods as an FRM? [Note suggested improvement to the plan would be appreciated, particularly ones that would help complete the study on time.]

I like the use of the VOAG for producing particulate nitrate samples at known concentrations. Although this can be tricky experimentally, it has the potential to produce aerosols with nitrate concentrations that are accurately known from first principles. The first principles measurement is possible because measurements are done with monodisperse particles. Since, in principle, the nitrate mass in each droplet produced by theVOAG is known, the total mass of nitrate collected is determined by the number of droplets collected (droplet concentration X flowrate X sampling time X nitrate mass per droplet) of nitrates in each droplet. Also, these

measurements will be carried out with relatively large particles (>0.5 µm), so will provide a more stringent test of the apparatus than would occur if experiments were done with a polydisperse aerosol. I believe the HEASD team ought to be able to do this work well, as members of the team have extensive experience with the VOAG.

5. What are the panel's views on using the emerging AMoN ammonia monitoring network that uses passive sampling technology as a tool for evaluating air quality model behavior with respect to characterizing ambient air patterns of ammonia?

OK if prior QA work has been published in peer-reviewed journal articles.

6. What are the panel's views on co-locating ammonia measurements at each location where the indictors are measured?

Co-located measurements of ammonia at each sampling location would seem to be very important.

7. What are the Panel's views on using the CASTNET filter pack (FP) to measure ammonium ion as a tool for evaluating air quality model behavior with respect to characterizing ambient air patterns of ammonia?

8. What are the panel's views on establishing a suite of NOy species measurements at 2- 5 locations in different atmospheric and ecological regions for the purpose of evaluating air quality model and NOy instrument behavior?

I think it would be a good idea to deploy exploratory speciated NOy measurements at a limited number of locations. This will facilitate model refinement, and will also allow the measurement methods to be evaluated and refined.

9. (Felton, McMurry) What are the panel's views on utilizing the existing CASTNET and rural NCore networks as a starting infrastructure for the purpose of supporting the NOx/SOx standard?

My initial reaction to this proposal was, "why not?" I think Dirk Felton's comments show clearly why it is essential to include input from state and local agencies in these Committees. I defer to Dirk.

10. What are the panel's views on using CASTNET filter pack (FP) to measure total nitrate (particulate nitrate plus nitric acid) as the measurement approach for the purpose of providing annual average values to support the NOx/SOx standard in diagnosing NOy instrument behavior and assist in delineating the relative fractions of contributing oxidized nitrogen species to total ambient oxidized nitrogen.

What are the Panel's views on using the CASTNET filter pack (FP) to measure total nitrate for the purpose of providing annual average values as a surrogate indicator for the NOx/SOx standard? If EPA would document the capability of the CASTNET FP and develops an FRM for total nitrate based on the existing information and procedures, what are the Panel's views of this approach for setting the FRM?

11. What are the panel's view of the broader consideration of using CASTNET, complemented by rural NCore, to serve as a framework for the nation's rural monitoring of important gases and aerosols in support of secondary standards and evaluating the behavior of regional air quality models?

Again, I defer to Dirk Felton on this point. His personal experience with these networks provides an important perspective that requires consideration. I do not have similar experience.

Comments from Dr. Allen Robinson

To: Edward Hanlon, EPA, CASAC AMMS subcommittee

From: Allen L. Robinson

Date: February 14, 2011

Re: Preliminary feedback for CASAC Review of Monitoring Options for NOx/SOx Secondary NAAQS

1. What are the Panel's views on using the CASTNET filter pack (FP) to measure particulate sulfate for the purpose of providing annual average values as an indicator for the NOx/SOx standard? Given EPA plans primarily to document the capability of the CASTNET FP and develop the FRM for particulate sulfate based on the existing information and procedures, what are the Panel's views of this approach for setting the FRM?

The CASTNET FP is one of several well-established techniques for measuring particulate sulfate. Presumably the suite of established techniques should be considered when setting an FRM. The major difference between existing techniques seems to be size cut -- 2.5 um or open face.

2. What are the Panel's views on using the CASTNET filter pack (FP) to measure sulfur dioxide gas for the purpose of providing annual average values as an indicator for the NOx/SOx standard? If EPA would document the capability of the CASTNET FP and develops an FRM for sulfur dioxide gas based on the existing information and procedures, what are the Panel's view of this approach for setting the FRM?

CASTNET FPs were designed for long term sampling in rural and remote areas. Have they been evaluated in urban environments or near stationary sources where the mixture of sulfur compounds in the atmosphere may be more complex and concentrations much higher, or where there may be other species that could interfere? Is this a concern in the context of the NOx/SOx standard?

It is not clear what the advantages of a FP approach for SO2 are relative to established continuous monitors. Increased sensitivity? They are presumably cheaper to buy but more expensive to operate? Scientifically the continuous monitors will provide a lot of extra information.

3. What are the Panel's views on using the current primary FRM (high time resolution UVF) to measure sulfur dioxide gas for the purpose of providing annual average values as an indicator for the NOx/SOx standard?

An advantage using the current primary FRM for evaluating the NOx/SOx standard is that hourly data can be used for model evaluation. Therefore, all else being equal (cost and performance), collecting more high time resolved data seems beneficial.

4. What are the panel's views on using existing NOy methods that are deployed, for example, in NCore as the measurement approach for NOy for the purpose of providing annual average values as an indicator for the NOx/SOx standard? What are the panel's views on EPA's assessment that additional study is needed before establishing an FRM based on the existing NOy methods? That is, are the methods already adequately demonstrated as a reference method to determine compliance with a NAAQS? What are the panel's views on the research plan for establishing existing NOy methods as an FRM? [Note suggested improvement to the plan would be appreciated, particularly ones that would help complete the study on time.]

There are a number of commercially available instruments for measuring NOy. However, there are a number of key issues remaining such as conversion efficiency of catalyst for the suite of NOy species and inlet performance for different species. These issues should be addressed before designating an FRM.

5. What are the Panel's views on using the CASTNET filter pack (FP) to measure total nitrate for the purpose of providing annual average values as a surrogate indicator for the NOx/SOx standard? If EPA would document the capability of the CASTNET FP and develops an FRM for total nitrate based on the existing information and procedures, what are the Panel's views of this approach for setting the FRM?

The sum of the Teflon and Nylon nitrate data collected using CASTNET FP provides a reasonable measure of the sum of nitric acid, nitrous acid, and ammonium nitrate. For a total nitrate FRM, an acid gas denuder should be used upstream of the Nylon filter.

6. What are the panel's views on using the emerging AMoN ammonia monitoring network that uses passive sampling technology as a tool for evaluating air quality model behavior with respect to characterizing ambient air patterns of ammonia?

I have not seen peer-reviewed evaluation of this sampler.

7. What are the panel's views on co-locating ammonia measurements at each location where the indicators are measured?

Co-locating samplers at every location seems like overkill. Certainly co-locating at a suitable set of sites that span range of atmospheric conditions is needed to establish comparability of measurement techniques.

8. What are the Panel's views on using the CASTNET filter pack (FP) to measure ammonium ion as a tool for evaluating air quality model behavior with respect to characterizing ambient air patterns of ammonia?

More data are needed for model evaluation. However, ammonium ion measurements by themselves have pretty limited value in evaluating emissions inventories, models, and especially the critical questions of: when are we in potential sulfate-nitrate substitution regimes and when is NH3 the limiting reagent (see e.g. Pinder et al. JGR 2006)? Therefore, if the data are being primarily collected for model evaluation there may be a more efficient use of funds.

NH3(g) and/or total NHx are much more useful. NHx total *or* NH3(g) plus NH4+ is the best case scenario. NH3(g) is probably more useful than NH4+ (if there is enough free ammonia in the gas-phase, you can deduce that the sulfate is neutralized). NH4+ by itself is probably the least useful.

On all of these, time resolution is important for model evaluation. The inorganic thermo regime bounces around enough that you want to be able to see that. Also, the higher time resolution instruments are naturally less vulnerable to various positive/negative partitioning artifacts for NH4+. Daily is probably decent. Hourly would be ideal. Multi-day exposures are probably not very helpful. “One in six” is better than multi-day exposures.

9. What are the panel's views on establishing a suite of NOy species measurements at 2- 5 locations in different atmospheric and ecological regions for the purpose of evaluating air quality model and NOy instrument behavior?

I strongly support this idea. However, it seems like evaluating the NOy instrument behavior in this fashion should be done before designating an FRM method.

10. What are the panel's views on utilizing the existing CASTNET and rural NCore networks as a starting infrastructure for the purpose of supporting the NOx/SOx standard?

Leveraging existing networks seems sensible, cost-effective starting point. However, EPA first must independently define the selection criteria for sites to evaluate the new secondary SOx/NOx NAAQS. Once these selection criteria are defined, EPA can then determine how many of the CASTNET and NCore sites are suitable for evaluating the new standard and how many new sites will need to be established. Presumably some new sites would need to be established.

11. What are the panel's views on using CASTNET filter pack (FP) to measure total nitrate (particulate nitrate plus nitric acid) as the measurement approach for the purpose of providing annual average values to support the NOx/SOx standard in diagnosing NOy instrument behavior and assist in delineating the relative fractions of contributing oxidized nitrogen species to total ambient oxidized nitrogen.

A FP measure of annual average values to support the NOx/SOx standard is reasonable. However, these measurements will have very limited value for evaluating a NOy instrument that provides much higher time resolved data.

12. What are the panel's view of the broader consideration of using CASTNET, complemented by

rural NCore, to serve as a framework for the nation's rural monitoring of important gases and aerosols in support of secondary standards and evaluating the behavior of regional air quality models?

See answer to #10.

Comments from Dr. Yousheng Zeng

GENERAL COMMENTS

1. The proposed NOx/SOx secondary NAAQS takes a form (aquatic acidification index, or AAI) that will require many parameters to be put in an equation to determine attainment with the standard. Some of these parameters will be determined by ecosystem's characteristics on a region-by-region basis among the 84 ecoregions covering the continental U.S.; some of the input parameters will come from the CMAQ model; and some will come from monitoring instruments. As of now, all NAAQS (primary or secondary) are based on direct measurements of pollutant levels in ambient air. Other than averaging or statistic schemes used to construct a proper form of the standards, no other modeled parameters are introduced as important components of the standards. The proposed NOx/SOx secondary standard is a dramatic departure from this long-established practice. This approach may be needed due to the nature of the ecosystems that this standard is set to protect. However, we need to keep in mind that unlike other NAAQS, there are a lot of relatively judgment-based parameters and model-based parameters being introduced into this standard. Through our knowledge in working with various air quality models, we understand that there are significant levels of uncertainties associated with these complex models. These uncertainties could be smaller or larger than the uncertainties associated with ambient monitoring methods. It will not be productive and cost-effective if we pursue the same level of perfection as we do with monitoring methods for traditional NAAQS where compliance is solely determined by measurements. Incremental gain in monitoring accuracy may become insignificant compared to the uncertainties introduced by judgment-based and model-based parameters.

2. The indicators measured for the NOx/SOx secondary standard are NOy, SO2, and p-SO4; and they are measured as ambient concentrations without considering effect of atmospheric precipitation. The fundamental concern of this secondary standard is acid deposition, which include wet and dry depositions. The proposed standard factors in the wet deposition through model-based components in the AAI equation. My understanding of EPA's plan is to apply one set of these judgment-based and model-based parameters to each of the 84 ecoregions. Each ecoregion could be large enough to cover areas that have substantially different annual precipitation. When one part of an ecoregion experience significantly more precipitation than another part of the same ecoregion, the indicators to be monitored (NOy, SO2, and p-SO4) will be significantly lower due to washout of these species by the precipitation. However, everything else in the AAI equation will remain the same. The area with more precipitation will have a better AAI, but the more acid deposition may have occurred and the impact to the ecosystem is not necessarily lower as indicated by AAI. It seems to me that wet deposition should be directly measured.

3. Reduced nitrogen (NH3 and NH4) seems significant in the AAI equation. Measurement methods exist for these species. NH4 is measured by CASTNET FP. What is the rationale to have some parameters (e.g., NOy, SO2, and p-SO4) measured and other (e.g., NH4,

NH3) modeled? Even a measurement for NH4 is less idea, it may still be better to directly measure it because it should better account for spatial variability and provide some consistency across the parameters used in this standard.

RESPONSES TO SPECIFIC CHARGE QUESTIONS

Response to Charge Question 1: Using CASTNET FP to measure p-SO4 for the purpose of the NOx/SOx secondary NAAQS makes sense. It is a well established method for similar application, i.e., measuring acid deposition in CASTNET. It is relatively simple and cost-effective. A disadvantage of this method is that it measures weekly average value and lacks the time resolution for studying daily or hourly changes. However, for monitoring compliance with this annual standard, this method is adequate. Even after some hourly measurement instruments (e.g., MARGA) is well developed, the CASTNET FP is expected to be a lower cost method. For the same budget, the disadvantage of poor temporal resolution can be traded off for better area coverage, i.e., having more monitoring locations. Better temporally resolved instruments can be deployed at a few selected sites (or on rotation with a mobile/transportable platform) for better understanding of temporal variability.

From regulatory viewpoint, determination of attainment with NAAQS, either primary or secondary, should be based on monitoring results generated by FRM or FEM. It seems that if the CASTNET FP method will be used for determination of attainment with the NOx/SOx secondary NAAQS, this method needs a FRM or FEM status. For aforementioned reasons, I would support EPA's effort to possibly develop the FRM specifically for the NOx/SOx secondary NAAQS based on the CASTNET FP method.

Responses to Charge Question 2: The FRM for SO2 (the manual method) has been established for a long time. Continuous SO2 FEM monitoring instruments are commercially available from various vendors. These instruments are well established and widely deployed. From the viewpoint of the technology, there is no need to develop another FRM based on a less sophisticated method. Designation of area attainment with NAAQS, either primary or secondary, is always based on FRM or FEM. If a designation is made based on non-FRM or non-FEM, the decision may be contested. To avoid this situation, a continuous SO2 FEM monitor needs to be deployed. However, the most CASTNET sites do not have a continuous SO2 FEM analyzer. For the purpose of determining compliance with the NOx/SOx secondary standard, a continuous SO2 FEM analyzer is not necessary. If EPA has sufficient data (or conduct additional study) to show that weekly averaged results generated by a continuous SO2 FEM analyzer are consistent with the results from CASTNET FP, it would be desirable to establish the CASTNET FP method as the FRM or FEM specifically for the NOx/SOx secondary NAAQS. Has EPA evaluated the accuracy/consistency between the SO2 measured by the CASTNET FP and the SO2 measured by a continuous SO2 FEM analyzer averaged over a week?

If EPA anticipates that a large number of monitoring stations for the NOx/SOx secondary standards will be standalone and not be co-located with stations in other networks, it will be

better to use the FP to measure SO2. This will be more cost-effective and the measurement averaging time will be synced with that of p-SO4.

Response to Charge Question 3: This is a purely cost issue. Assuming that the results of CASTNET FP are consistent with the results of a continuous SO2 FEM analyzer averaged over a week, I would prefer the CASTNET FP method for all NOx/SOx secondary standard monitoring sites plus a few selected sites equipped with a continuous SO2 FEM analyzer (or on rotation with a mobile/transportable platform) for better understanding of temporal variability. The use of a continuous SO2 FEM analyzer will not be mandatory and it is for special study purposes.

Response to Charge Question 4: EPA's research plan includes an effort to evaluate the FP SO2 method for potential FRM/FEM. I highly support this effort and strongly encourage EPA to elevate the level of importance of this element in the research plan. I am concerned by EPA's notion that there is already FRM and FEM for SO2 and therefore there is no need to establish additional SO2 FRM or FEM for the NOx/SOx secondary standard. I do think that having a FP based SO2 FRM or FEM is very important for the reasons discussed in my Response to Charge Question 2.

The idea of using t-NO3 measured by FP as surrogate for NOy is very attractive. If this approach is demonstrated to be acceptable in the context of NOx/SOx secondary NAAQS, the monitoring network for NOx/SOx secondary NAAQS could be made of nothing but CASTNET FP type monitors to collect all parameters (SO2, p-SO4, and NOy) needed to determine compliance with the secondary standard. The FP based monitors can form the backbone of the monitoring network and the network can be supplemented by a higher tier, more sophisticated SO2 and NOy analyzers deployed at a few selected sites or on a rotation basis. Even if t-NO3 is not an adequate surrogate for NOy, the established NOx monitors could be used so that the combined results of NOx from NOx analyzer and t-NO3 from FP can cover the majority (probably >90%) of NOy.

A FRM/FEM is needed for NOy for reasons discussed in my Responses to Charge Questions 1 and 2.

Response to Charge Question 5: See my Response to Charge Question 4 above.

Response to Charge Question 6: To be provided later.

Response to Charge Question 7: To be provided later.

Response to Charge Question 8: It should be an area for EPA to explore. My initial thought on this is the sampling time. If the purpose is to study the model behavior, will the time resolution of the weekly data sufficient? I am not familiar with the FP method for ammonium. Is there a concern about any portion of ammonium being lost due to vapor pressure of some ammonium salt? Also, I am not sure if the FP method can provide information on relationship between ammonium and ammonia.

Response to Charge Question 9: I would support this approach. It seems that instruments such as MARGA will be suitable to this type of sites. For this purpose, even if the absolute accuracy of the measurements is not high, relative relationship and behavior will be useful.

Response to Charge Question 10: I think the CASTNET and rural NCore network will be a good starting point for the NOx/SOx secondary NAAQS monitoring network. If EPA can determine that the CASTNET FP method can adequately measure SO2, p-SO4, and NOy, directly (SO2 and p-SO4) or through a surrogate (t-NO3 as a surrogate for NOy), balancing the uncertainties that exist in other components of the AAI equation and the requirements for measurement accuracy, this approach will facilitate implementation of the new secondary standard in a shorter timeframe and with lower cost.

A question I have is – are there any sensitive ecoregions that are not adequately represented by the CASTNET network?

Response to Charge Question 11: EPA should use FP along with NOy instruments for the purposes stated in this question. According to the current Research Plan, it seems that EPA will use existing data for similar analysis but not actually perform side-by-side measurements between FP and NOy instrument. It would be very beneficial to include FP in this well structured both lab and ambient study to evaluate the relationship between the two measurements (and other measurements planned in the study).

Response to Charge Question 12: It is not clear to me what are the "important gases and aerosols" in this question. If they are the same species that will be used in the calculations of the NOx/SOx secondary NAAQS, the question has been addressed in above discussions (e.g., Response to Charge Question 10). If it refers to something "broader", I would like to know what it is before responding.

With regard to evaluating the behavior of regional air quality models, the biggest concern is the time resolution. The CASTNET FP method measures these species on weekly average basis. This will not have time resolution fine enough to evaluate model behavior.

Comments from Dr. Andrzej Bytnerowicz

Reponses (only to the questions where I have adequate knowledge and experience)

1. What are the Panel's views on using the CASTNET filter pack (FP) to measure particulate sulfate for the purpose of providing annual average values as an indicator for the NOx/SOx standard? Given EPA plans primarily to document the capability of the CASTNET FP and develop the FRM for particulate sulfate based on the existing information and procedures, what are the Panel's views of this approach for setting the FRM?

2. What are the Panel's views on using the CASTNET filter pack (FP) to measure sulfur dioxide gas for the purpose of providing annual average values as an indicator for the NOx/SOx standard? If EPA would document the capability of the CASTNET FP and develops an FRM for sulfur dioxide gas based on the existing information and procedures, what are the Panel's views of this approach for setting the FRM?

3. What are the Panel's views on using the current primary FRM (high time resolution UVF) to measure sulfur dioxide gas for the purpose of providing annual average values as an indicator for the NOx/SOx standard?

4. What are the panel's views on using existing NOy methods that are deployed, for example, in NCore as the measurement approach for NOy for the purpose of providing annual average values as an indicator for the NOx/SOx standard? What are the panel's views on EPA's assessment that additional study is needed before establishing an FRM based on the existing NOy methods? That is, are the methods already adequately demonstrated as a reference method to determine compliance with a NAAQS? What are the panel's views on the research plan for establishing existing NOy methods as an FRM? [Note suggested improvement to the plan would be appreciated, particularly ones that would help complete the study on time.]

5. What are the Panel's views on using the CASTNET filter pack (FP) to measure total nitrate for the purpose of providing annual average values as a surrogate indicator for the NOx/Sox standard? If EPA would document the capability of the CASTNET FP and develops an FRM for total nitrate based on the existing information and procedures, what are the Panel's views of this approach for setting the FRM?

Answer: The filter pack is capable of measuring total nitrate by collecting particulate nitrate on the Teflon filter and nitric acid on the nylon filter. Major problem of this method is that the proportion of the measured particulate vs. gaseous fractions is unreliable. Due to the ammonium nitrate volatilization to nitric acid and ammonia it is unknown how much of the nitrate deposited on the Teflon filter has remained in particulate form, and how much has been decomposed and added to nitric acid collected on the nylon filter.

6. What are the panel's views on using the emerging AMoN ammonia monitoring network that uses passive sampling technology as a tool for evaluating air quality model behavior with respect to characterizing ambient air patterns of ammonia?

Answer: This is a good approach that can produce reliable results of the time-integrated (week to a month) concentrations of ammonia. There are several types of the commercially available passive samplers for ammonia that can produce reliable results. AMoN monitoring network is needed because of an absence of reliable, practical and cost-effective electronic monitors and uncertainties of the CMAQ predictions of the NHx ambient concentrations.

7. What are the panel's views on co-locating ammonia measurements at each location where the indicators are measured?

Answer: This is a good idea that should help in understanding spatial and temporal patterns of ammonia distribution based on the experimental data. Collocation of ammonia passive samplers with the CASTNET filter packs could also help in understanding what proportion of ammonium nitrate collected on Teflon filter has volatilized. I suggest adding also passive samplers for nitric acid that have been successfully used in the various parts of the US and Canada. Collocating ammonia and nitric acid passive samplers with the CASTNET filter packs could be useful in evaluation of the mentioned above problems related to the ammonium nitrate volatilization.

8. What are the Panel's views on using the CASTNET filter pack (FP) to measure ammonium ion as a tool for evaluating air quality model behavior with respect to characterizing ambient air patterns of ammonia?

Answer: That would only be useful if another filter (citric acid or phosphoric acid coated) is added to the filter pack to collect ammonia resulting from the ammonium nitrate volatilization. At the same time ammonia should also be measured with the collocated passive samplers.

9. What are the panel's views on establishing a suite of NOy species measurements at 2 -5 locations in different atmospheric and ecological regions for the purpose of evaluating air quality model and NOy instrument behavior?

Answer: That should be done with the chemiluminescence instruments for total NOy. In addition, passive samplers for NOx, NO_2, and HNO_3 should also be deployed.

10. What are the panel's views on utilizing the existing CASTNET and rural NCore networks as a starting infrastructure for the purpose of supporting the NOx/SOx standard?

Answer: This is a very good idea. If I am correct, the proposed network would probably use the Radiello samplers. There are also other samplers of a similar reliability (such as Alpha or Ogawa). It would be good to coordinate these efforts with the ongoing monitoring of ammonia with the Ogawa passive samplers in the western US, especially in southern California and the Sierra Nevada (especially the Lake Tahoe Basin).

11. What are the panel's views on using CASTNET filter pack (FP) to measure total nitrate (particulate nitrate plus nitric acid) as the measurement approach for the purpose of providing annual average values to support the NOx/SOx standard in diagnosing NOy instrument behavior and assist in delineating the relative fractions of contributing oxidized nitrogen species to total ambient oxidized nitrogen.

Answer: Due to the above mentioned ammonium nitrate volatilization issues, the CASTNET filter pack as presently used would be a very poor tool for supporting the NOy measurements conducted with the electronic monitors.

12. What are the panel's view of the broader consideration of using CASTNET, complemented by rural NCore, to serve as a framework for the nation's rural monitoring of important gases and aerosols in support of secondary standards and evaluating the behavior of regional air quality models?

Answer: This is a very good idea, especially if additional measurements with passive samplers and some other techniques (e.g., remote sensing) are also considered. In addition the meteorological data collected at the CASTNET sites (especially temperature) would improve quality of data derived from the passive samplers (correction for diffusion rates). The Forest Service will soon start monitoring of air quality (ozone and reactive gaseous N species) on a national network of the Experimental Forests and Ranges. That will be done in collaboration with the CLAD activities under the umbrella of NADP (collaboration between FS, NPS, EPA, USGS and academia).

Comments from Mr. Rich Poirot

AAMMS Review Comments on Secondary SOx/NOx measurement methods, R Poirot

1. What are the Panel's views on using the CASTNET filter pack (FP) to measure particulate sulfate for the purpose of providing annual average values as an indicator fort the NOx/SOx standard? Given EPA plans primarily to document the capability of the CASTNET FP and develop the FRM for particulate sulfate based on the existing information and procedures, what are the Panel's views of this approach for setting the FRM?

The proposed use of the CASTNET Filter Pack (CFP) as an FRM for sampling particulate sulfate for this secondary NAAQS application seems adequate. The method has been relatively well-characterized and evaluated, and has a documented long-term track record of successful use in a field network designed to assess spatial patterns and long-term temporal trends. Because the CASTNET network plays an important role in tracking CAA-related air quality changes over space and time (regardless of new standards), I also think the program as a whole will benefit from the more detailed scrutiny that would result from FRM development, and subsequent use in a compliance application. For example it has been observed that the error associated with long-term CASTNET (and other) sulfate trends may be larger (about 1%/yr) than has previously been estimated (White *et al*., 2005), and efforts to further reduce that uncertainty would be welcome.

A major advantage of specifying the CFP for sulfate is also to maintain the possibility that the CFP might conceivably be used to supply all the measurements required to implement this NAAQS, assuming that an FEM could be specified for CFP SO_2 and that "total nitrate" (and an associated deposition transfer ratio) could be used as a surrogate for NOy in the AAI equation. The resulting network might employ a mix of weekly filter-based and continuous methods, and address the multiple objectives of compliance determination, model evaluation /improvement, and more complete atmospheric characterization – without the need to do everything everywhere

The time resolution of the resulting CFP weekly data is adequate for (partially) determining compliance with a NAAQS with a 3 to 5-year averaging time, and sampling all the time will reduce the inter-annual variability introduced by intermittent (1 in 3 day) daily sampling in programs like IMPROVE and CSN (or avoid the excessive costs of operating such filter-based networks daily). Weekly time resolution is minimally useful for model evaluation and refinement, and for that objective, it would be highly desirable to consider deployment of continuous sulfate analyzers at a few sites where continuous SO_2 is being measured. See for example Drewnick *et al.* (2003). While continuous sulfate analyzers are typically operated with size selective inlets, they don't necessarily need to be run that way. Although, for model evaluation purposes (if not for NAAQS determination), a 2.5 micron inlet might actually be desirable for continuous sulfate. Specifically, I don't expect CMAQ to have much skill in calculating coarse sulfate concentrations, and adding some coarse sulfate into the measurement, without knowing how much or in what size bin is not likely to help improve the model.

For similar reasons, I don't completely agree with staff arguments that the open-faced CFP sampler is critically necessary to include capture of coarse sulfate particles. I think this is harmless but probably not very helpful (and is in any event not very important- a few percent of the problem at most). This is not a purely measurement-based NAAQS, nor one focused directly on measured deposition, but rather one that relies on a combination of air concentration measurements and model results. The estimated total S deposition (aggregated over multiple years and spatially large ecoregions) is the product of the measured SOx indicator and the CMAQ T_{SOx} deposition transfer ratio. The best indicator is not the one which includes (as open-faced sulfate might) a bit more of the species which dry deposit most efficiently. The best indicator is the one with the best and most stable correlations over both space and time with total S deposition. I doubt that CMAQ has much skill in predicting coarse particle sulfate concentrations or deposition, and I further question the ability of an (affordable) monitoring network to adequately capture the spatial variability of coarse particle sulfate concentrations. Further, the open faced collector provides no information on what fraction of the resulting sulfate is in the larger, more rapidly dry-depositing size range, or what the sizes of those larger particles are. The SOx indicator is proposed to be the simple, linear sum of atmospheric S from (rapidly dry depositing) SO_2 and (much more slowly depositing) particulate SO_4 (with no attempt to weight this sum by the relative deposition velocities, for example). I don't believe that it can be demonstrated that a SOx indicator which includes an unknown amount of coarse sulfate, combined with a CMAQ T_{SOx} deposition transfer ratio which also includes coarse sulfate (for which the model performs poorly) can be shown to be a superior indicator over space and time than a combination of measure and model ratio which excludes coarse particles.

During the 2003/ 2004 IMPROVE coarse particle characterization study (Malm et al., 2007), there was more coarse particle nitrate than sulfate at all 9 of the rural, nationally distributed IMPROVE sites included in that study. Crustal material, which tends to be alkaline, accounted for more than half the coarse mass at all sites, and so it seems highly unlikely that the relatively small amounts of coarse N and S contribute an "acidifying" effect that is not more than countered by associated deposition of base cations (not considered in the AAI equation). It also seems likely that much of the coarse sulfate and nitrate may be associated with mineral cations (Ca^{++}, Mg^{++}, K^{+}, Na^{+}, etc.), and this coarse mineral nitrate (which exceeds coarse sulfate) may not be efficiently captured by, or fully converted by the proposed NOy samplers. Conceivably, there could be a bit of positive sampling artifact if acid gases react with alkaline coarse crustal material on the open faced filters, although this would be quite small and minimized or offset if it's the sum of PM and acid gas compounds (from the same CFP) that's used as the indicator.

As indicated above, I generally support the specification of the CFP as p-SO_4 FRM for this standard, and think it would be highly desirable to add a few continuous sulfate analyzers at sites with continuous SO_2 for model evaluation/improvement purposes. I think it would also be useful if the proposed HEASD Research Plan for FRMs for NOy and p-SO_4 were accompanied by a parallel effort to look more closely at CMAQ concentrations, deposition and species ratios over space and time. Can it be demonstrated that inclusion or exclusion of coarse sulfate improves the overall measure+model total S deposition estimate? Might there be a comparable measure + model combination using SO_2 and fine sulfate only. Does a linear sum of gas and particle S (or N) species make the best indicator over space and time, or might a weighted sum work better? What is the spatial variability of the modeled species concentrations, depositions and transfer

ratios within the identified ecoregions? How would measure+model N deposition estimates compare if based on CFP total nitrate rather than NOy, etc.?

5. What are the Panel's views on using the CASTNET filter pack (FP) to measure total nitrate for the purpose of providing annual average values as a surrogate indicator for the NOx/SOx standard? If EPA would document the capability of the CASTNET FP and develops an FRM for total nitrate based on the existing information and procedures, what are the Panel's views of this approach for setting the FRM?

Based on the (revised) Figure 2-32 in the Final 2/11 Policy Assessment Document (and monitoring summary) as well as Figure 4-21 from the 9/10 Draft PAD, it appears that nitric acid would be as good an indicator (or better) than NOy for predicting total oxidized N deposition (if combined with a matched CMAQ deposition transfer function). I assume the total nitrate (sum of particulate nitrate and nitric acid) available from CASTNET Filter Pack (CFP) samples would also make for an adequate indicator of total N deposition. This could easily be evaluated by exploring the stability of CMAQ ratios of total nitrate to total oxidized N deposition over space and time (with decreased NOx emissions). Assuming this indicator is suitable, and that SO_2 from the CASTNET filter pack was also suitable (combined with CFP SO_4) as a SOx indicator, all measurements needed to implement the standard could be taken by the CFP method.

While the weekly time resolution of CFP data would be adequate to determine compliance with a standard averaged over 3 to 5 years, such data would be much less useful for purposes of model evaluation and refinement and overall atmospheric characterization than that which could be provided by the use of continuous SO_2, SO_4 NO_Y or speciated NO_Y measurements. Given current budgetary constraints, a network composed of relatively inexpensive CFP samplers at many sites, complemented by continuous samplers for the various relevant species at a subset of sites might be a reasonable approach.

It was interesting to note in the HEASD Methods research plan that while HEASD "<u>will</u>" conduct a thorough evaluation of the NOy method, and "<u>will</u>" propose and finalize FRM specifications for NOy, HEASD only "<u>may</u> consider, as resources allow" an additional FRM or FEM using the CFP t-NO_3 method "due to the <u>expected prohibitive cost</u> associated with equipping a site with NOy monitors". Hmmm… I think it should be a somewhat higher priority to evaluate the suitability of the CFP t-NO_3 method as potential indicator (combined with an equivalent CMAQ deposition transfer function). The Methods Research Plan should also be complemented with a much more detailed evaluation of the CMAQ model results for all the various N and S species concentration, deposition and transfer ratios. For example, from CMAQ alone, what would be the differences over space and time in estimated total oxidized N deposition if NOy or tNO_3 were used as indicator (quite small I suspect)? Perhaps this would allow a mix of methods with different measured indicators but comparable measure+model deposition estimates. The suitability of the CFP t-NO_3 (and SOx) method(s) could also be (approximately) assessed using historical CASTNET concentration and dry deposition + NADP wet deposition data. See for example Butler et al. (2011), etc.

References

Drewnick, J. J. Schwab, O. Hogrefe, S. Peters, L. Husain, D. Diamond, R. Weber and K. L. Demerjian (2003) Intercomparison and evaluation of four semi-continuous PM2.5 sulfate instruments, *Atmospheric Environment*, **37 (24)** 3335-3350.

Malm, W.C., M.L. Pitchford, C. McDade, and L.L. Ashbaugh (2007) Coarse particle speciation at selected locations in the rural continental United States. *Atmospheric Environment*, **41 (10)** 2225-2239.

W.H. White, L.L. Ashbaugh, N.P. Hyslop and C.E. McDade (2005) Estimating measurement uncertainty in an ambient sulfate trend, *Atmospheric Environment*, **39 (36)** 6857-6867.

Butler, T. J., F. M. Vermeylen, M. Rury, G. E. Likens, B. Lee, G. E. Bowker and L. McCluney (2011) Response of ozone and nitrate to stationary source NOx emission reductions in the eastern USA, *Atmospheric Environment* **45 (5)** 1084-1094.