MOJAVE DESERT
AIR QUALITY MANAGEMENT DISTRICT

New Source Review Document – *Preliminary Decision*
FOP Minor Modification – *Preliminary Determination*

for
Modification to

Federal Operating Permit Number: 11800001

For: Mitsubishi Cement Corporation

Facility: Cushenbury Plant

Submittal Date to EPA/CARB review: April 1, 2013
EPA/CARB 45-day Commenting Period ends: May 15, 2013
Permit Issue date: On or about May 17, 2013

Processing Engineer:

Sheri Haggard

14306 PARK AVENUE, VICTORVILLE, CALIFORNIA 92392
PHONE (760) 245-1661
FAX (760) 245-2022

A. Introduction

1. Application and Setting

Mitsubishi Cement Corporation – Cushenbury Plant (MCC) is a Portland Cement manufacturing facility located in Lucerne Valley, which includes the mining and processing of limestone, excavation, conveying, calcining, crushing, screening, storage, and transporting of materials including their primary product, cement.

The Mojave Desert Air Quality Management District (MDAQMD or District) received an application on January 14, 2013 for the addition of a Slurry Lime Injection (SLI) System, as a strategy to meet the upcoming changes in NESHAP regulations which require control of hydrochloric acid (HCl).

Pursuant to District Rule 1301 – *New Source Review Definitions*, MCC is an existing Major Facility for CO, NO_x, PM_{10}, and VOC. The MDAQMD is classified as 'attainment/unclassified' by USEPA and CARB for CO and SO_2; therefore, pursuant to District Rule 1303 – *New Source Review Requirements*, the proposed equipment is subject to both the BACT and Offset requirements for the Nonattainment Air Pollutant/Precursors of NO_x and VOC (ozone Precursors), as well as PM_{10}. Subsequently, the MDAQMD is issuing this New Source Review Document with a preliminary decision on the application submitted by MCC pursuant to District Rule 1302 – *New Source Review Procedure*, section (D)(1). As required by District Rule 1302, this New Source Review Document will review the proposed equipment, evaluating worst-case or maximum air quality impacts and establishing control technology requirements and related air quality permit conditions. This document represents the preliminary, pre-construction compliance review of the proposed project to determine whether construction and operation of the proposed project will comply with all applicable MDAQMD, state and federal rules and regulations.

In addition, MCC is defined as a federal Major Facility pursuant to District Rule 1201 – *Federal Operating Permit Definitions.* The proposed modifications classifies as a Minor Modification to MCC's Federal Operating Permit (FOP). Pursuant to District Rule 3005 – *Modifications of Federal Operating Permits*, section (C)(2), this document serves as the preliminary determination to issue MCC the modified FOP, inclusive of the proposed changes. This preliminary determination will be submitted to USEPA and CARB for review on March 27, 2013.

2. Description of Project

The applicant proposes the following Permit Units and subsequent FOP changes:

Table 1 – *Proposed Equipment*

District Permit	Equipment Description
B011738	Slurry Lime Injection System
C011737	Dust Collector for Slurry Lime Injection Storage Silo

The first application proposes a Slurry Lime Injection (SLI) system (District Permit B011738). The SLI system will consist of a lime storage silo, batch tank, day tank, and associated equipment to mix dry lime or sorbent with plant water to form a lime slurry, which will then be injected into the kiln exhaust flow within in the north and south downcomers. This application and associated equipment will not result in an emissions increase. To view the emission change calculations, see section (B)(1) below. The proposed permit description and language for the SLI system can be seen in section (B)(9).

The second application proposes a Dust Collector for the SLI Storage Silo (District Permit C011737). This dust collector is located atop the SLI storage silo and will control emissions during product unloading (from truck to the lime storage silo). This application and associated equipment will not result in an emissions increase. To view the emission change calculations, see section (B)(1) below. The proposed permit description and language for the Dust Collector for Slurry Lime Injection Storage Silo can be seen in section (B)(9).

B. NSR Analysis

1. Criteria Emissions

District Rule 1304 – *Emissions Calculations*, provides the procedures and formulas to calculate emission increases and decreases for new or Modified Facilities. Section (A)(1)(a)(iii), of this rule, states that District Rule 1304 shall determine the Potential to Emit of new or modified Facilities and Emission Unit(s). Pursuant to District Rule 1304, the emission change for a new or Modified Facility or Emissions Unit(s) shall be calculated, in pounds per day, by subtracting Historic Actual Emission from Proposed Emissions (section (B)(1)(a)):

Emissions Change = (Proposed Emissions) – (Historic Actual Emissions)

MCC is proposing the use of Simultaneous Emission Reductions (SERs) to offset the emissions associated with the proposed SLI system and associated duct collector. Section (C)(2)(a) of District Rule 1304, allows SERs to be calculated by the shutdown of Emission Unit(s) as follows:

Simultaneous Emission Reductions = Historic Actual Emissions

Therefore, the resulting emissions change from the proposed applications shall be calculated as follows:

Emissions Change = (Proposed Emissions) – (Simultaneous Emission Reductions)

Section (D)(2)(a)(ii), allows for the Historic Actual Emissions of Emission Unit(s), in this case SERs, to be verified Actual Emissions of the Emission Unit(s), averaged for any two years of the five year period which immediately preceded the date of application if the APCO has determined it is more representative of the Facility operations than just the averaged two year period immediately preceding the date of application. For the proposed applications, MCC has chosen to surrender two emergency generators (District Permits E007911 and E008202) as SERs. These engines were phased out over the period of 2010-2012 and were removed from service in September of 2012; therefore, the most representative two years of the past five year period immediately preceding the date of application are 2008 and 2009. MCC chose, for representation, the years 2010 and 2011 as more conservative approach, which was approved by the APCO. Table 2, below, shows the hours of operation of the engines for the five year period immediately proceed the application date (January 14, 2013). Normal operation for these engines was around 10 hours per year for testing and maintenance and a few hours of additional operation for actual power outages.

Table 2 – *Historic Actual Operation for Engines Surrounded as SERs*

District Permit	**Annual Hours of Operation**				
	2012	2011*	2010*	2009	2008
E007911	0	0	1	10	11
E008202	1	6	7	9	13

*The two years chosen and approved by APCO to be averaged for the use of HAE/SERs

The Historic Actual Emissions of the emergency generators (District Permits E007911 and E008202) surrendered as SERs is displayed in Table 3, below:

Table 3 – *Historic Actual Emissions for Engines Surrounded as SERs*

District Permit	**Annual PM_{10} Emissions (2010)**		
	Fuel Usage (gal/yr)	*PM_{10} Emissions (lbs/yr)*	*Total PM_{10} Emissions (lbs/yr)*
E007911	25	1	32
E008202	741	31	
District Permit	**Annual PM_{10} Emissions (2011)**		
	Fuel Usage (gal/yr)	*PM_{10} Emissions (lbs/yr)*	*Total PM_{10} Emissions (lbs/yr)*
E007911	0	0	27
E008202	635	27	
			Averaged Total PM_{10} Emissions to be used as SERs (lbs/yr)
			30

The Proposed Emissions, according to District Rule 1304, Section (D)(1)(a), shall be equal to the Potential to Emit of the proposed Emissions Unit(s). Potential to Emit, as defined in District Rule 1301– *NSR Definitions*, Section (UU) is the maximum capacity of a Facility or Emissions Unit(s) to emit any Regulated Air Pollutant under its physical and operational design. The only Regulated Air Pollutant that will be emitted from the proposed SLI system and associated equipment is PM_{10}. There is a potential emission of PM_{10} from the Dust Collector for Slurry Lime Injection Storage Silo, as well as, potential fugitive PM_{10} emissions generated from system throughput. Bin venting via the Dust Collector for Slurry Lime Injection Storage Silo is only during lime product unloading (from truck deliveries to the silo). The applicant has proposed each product unloading to be less than one hour per load and less than two loads per week, which would equate to approximately 104 hours per year. Doubling the product unloading to 200 hours per year, to be conservative, and using the know variables of the Dust Collector (flow rate = 1000 acfm and emission loading = 0.01 grains/dscf), the associated bin venting emissions can be calculated as follows:

$$1000\ acfm \times 60\ min/yr \times 200\ hr/yr \times 0.01\ gr/dscf \div 7000\ gr/lb = 17\ lb/yr\ PM_{10}$$

To ensure that the PM_{10} emissions associated with bin venting will not exceed the proposed emissions calculated, above, the Dust Collector for Slurry Lime Injection Storage Silo has been limited to product unloading of less than 200 hours per year by permit condition.

Process fugitive emissions are estimated using the District emission factor of 0.014 pounds of PM_{10} per ton of material and a control factor of 95%. The estimated throughput of the SLI system is 4000 tons per year, thus the associated process fugitive emissions can be calculated as follows:

$$4000\ ton/yr \text{ of Lime} \times 2 \text{ transfer points} \times 0.014\ lb PM_{10}/ton \times (1 - 0.95) = 6\ lb/yr\ PM_{10}$$

To ensure that the fugitive PM_{10} emissions associated with the SLI process will not exceed the proposed emissions calculated, above, the Slurry Lime Injection System has been limited to 4000 tons per year by permit condition. A summary of the Proposed Emissions from the proposed equipment, potential emission of PM_{10} from the Dust Collector for Slurry Lime Injection Storage Silo, as well as, potential fugitive PM_{10} emissions generated from system throughput, can be seen in Table 4, below:

Table 4 – *Proposed Emissions from Project*

Emission Source	**PM_{10} Emissions**(lb/yr)
Bin Venting	17
Process Fugitive	6
Total	*23*

A summary of the resulting Emissions Change from the proposed applications is displayed in Table 5, below:

Table 5 – *Emissions Change from Project*

	PM_{10} Emissions (lb/yr)
Proposed Emissions	23
SERs	30
*Emissions Change**	*-7*

*Emissions Change = (Proposed Emissions) – (Simultaneous Emission Reductions), pursuant to District Rule 1304, section (B)(1)(a) and Section (C)(2)(a).

Therefore, pursuant to District Rule 1304, the SERs surrendered more than offset the proposed projects Potential to Emit; there is no increase in emissions.

2. Control Technology Evaluation

Best Available Control Technology (BACT) is required for a each new or Modified Permit Unit at a Modified Facility that emits, or has the Potential to Emit, twenty-five (25) tons per year or more of any Nonattainment Air Pollutant or its Precursors (District Rule 1303(A)(3)). MCC has a facility PTE in excess of twenty-five (25) tons per year for the Nonattainment Air Pollutant and of PM_{10}; therefore, the proposed Permit Units shall be equipped with BACT pursuant to District Rule 1303.

The District has determined that BACT for the SLI system is to control the process emissions with a dust collector. The District has determined that BACT for a dust collector is 0.01 grains per dry standard cubic foot.

MCC proposes that BACT will be achieved by installing the Dust Collector for the Slurry Lime Injection Storage Silo with a certified emission loading of 0.01 grains per dry standard cubic foot.

3. Alternative Siting

Pursuant to the requirements in District Rule 1302 B(1)(a)(iii), an analysis of Alternative Siting is not required as the proposed equipment does not qualify as an application for a new Major Facility, nor is it a Major Modification.

4. Class I Area Visibility Protection

Pursuant to the requirements in District Rule 1302 B(1)(a)(v), an analysis of any anticipated impacts on visibility is not required as the proposed equipment does not qualify as an application for a new Major Facility, nor is it a Major Modification.

5. Air Quality Impact Analysis

District Rule 1302, section (C)(2)(b) requires that any new or Modified Facility located in an area classified by USEPA as attainment or unclassifiable shall determine if the Facility will cause or contribute to a violation of the National Ambient Air Quality Standards (NAAQS). The proposed modification, discussed herein, do not cause an increase in emissions, and subsequently, will not contribute to a violation of the NAAQS.

6. Toxic Impact Assessment

a. *District Rule 1320:*
Pursuant to District Rule 1320 – *New Source Review for Toxic Air Contaminants*, MCC is subject to both State and Federal Toxic New Source Review, as MCC is a Modified Facility (or Emissions Units) which has the potential to emit a Toxic Air Contaminant, as well contains Emissions Units which are subject to an Airborne Toxic Control Measure (State T-NSR), and MCC also has the potential to emit 10 tons per year of any single Hazardous Air Pollutant (Federal T-NSR). Pursuant to the requirements of District Rule 1320, an applicability analysis of state and federal air toxic regulations was conducted for the proposed equipment (State T-NSR and Federal T-NSR, respectively). The State T-NSR and Federal T-NSR analyses are described below:

1. State T-NSR:
District Rule 1301 defines Emissions Unit as any article, machine, equipment, other contrivance or combination thereof which emits or has the Potential to Emit any Hazardous Air Pollutant, Toxic Air Contaminant, or Regulated Toxic Substance. The new, proposed Emission Units do not have the Potential to Emit any of the above described Pollutant/Contaminants/Substances nor

is there any Airbone Toxic Control Measures applicable to the proposed Emission Units; therefore, no further State Toxic NSR Analysis is required for this project.

2. Federal T-NSR:
Pursuant to section (F)(1) of District Rule 1320, the Modified Facility/Emissions Units were analyzed to determine if any current, enforceable Maximum Achievable Control Technology (MACT) standards apply. No MACTs apply to the proposed Emissions Units of this project; therefore, no further Federal Toxic NSR Analysis is required.

b. District Rule 1520:
District Rule 1520 – *Control of Toxic Air Contaminants from Existing Sources* applies to MCC, as they are an existing facility that has a facility PTE greater than ten (10) tons per year for VOC, PM, and NO_x, as well as a PTE to emit a TAC (Section (B)(1)(a) and (c)). MCC's most recent (2011 emission year) Comprehensive Emission Inventory Report (CEIR) was utilized to fulfill the requirements of section (D)(1)(b)(i) of District Rule 1520. A Toxic 'Hot Spots' Program Analysis pursuant to section (E) of District Rule 1520, with a facility Prioritization Scoring was calculated, as required. The Facility Prioritization Scores for MCC are greater than (1) and less than ten (10); therefore, categorizes MCC as 'Intermediate Priority'. Based on the requirements of District Rule 1520, section (E)(1)(b), no further analysis is required. The HARP data for the Facility Prioritization Scores can be viewed in Appendix B.

7. Rules and Regulations Applicable to the Proposed Project

District Rules

Rule 201/203 – *Permits to Construct/Permit to Operate*. Any equipment which may cause the issuance of air contaminants must obtain authorization for such construction from the Air Pollution Control Officer. MCC is in compliance with this rule as they appropriately applied for a District permit for all new equipment and maintains District permits for all residing equipment.

Rule 204 – *Permit Conditions*. To assure compliance with all applicable regulations, the Air Pollution Control Officer (Executive Director) may impose written conditions on any permit. The District permit conditions listed in section (B)(9) are written to ensure MCC complies with all applicable regulations.

Rule 206 – *Posting of Permit to Operate*. Equipment shall not operate unless the entire permit is affixed upon the equipment or kept at a location for which it is issued and will be made available to the District upon request.

Rule 207 – *Altering or Falsifying of Permit.* A person shall not willfully deface, alter, forge, or falsify any issued permit.

Rule 209 – *Transfer and Voiding of Permits*. MCC shall not transfer, whether by operation of law or otherwise, either from one location to another, from one piece of equipment to another, or

from one person to another. When equipment which has been granted a permit is altered, changes location, or no longer will be operated, the permit shall become void.

Rule 210 – *Applications*. MCC provided all the required information to correctly address the proposed equipment pursuant to this rule, although there were instances in which additional information were required, in which the thirty (30) day clock was restarted.

Rule 212 – *Standards for Approving Permits*. This rule establishes baseline criteria for approving permits by the District for certain projects. In accordance with these criteria, the proposed modifications and application does not cause issuance of air contaminants in violation of Sections 41700 or 41701 of the State Health and Safety code.

Rule 221 – *Federal Operating Permit Requirement.* MCC is in compliance with this rule, as they currently hold and maintain a Federal Operating Permit.

Rule 301 – *Permit Fees*. The proposed equipment will increase MCC's annual permit fees by the applicable amounts described in section (E).

Rule 401 – *Visible Emissions*. This rule limits visible emissions opacity to less than 20 percent (or Ringlemann No. 1). In normal operating mode, visible emissions are not expected to exceed 20 percent opacity.

Rule 402 – *Nuisance*. This rule prohibits facility emissions that cause a public nuisance. The proposed modifications and associated equipment is required by permit condition to employ good engineering and operational principles in order to minimize emissions and the possibility of a nuisance.

Rule 408 – *Circumvention*. This rule prohibits hidden or secondary rule violations. The proposed modifications as described is not expected to violate Rule 408.

Rule 430 – *Breakdown Provisions*. Any Breakdown which results in a violation to any rule or regulation as defined by Rule 430 shall be properly addressed pursuant to this rule.

Rule 900 – Standards of Performance for New Stationary Sources (NSPS). Rule 900 adopts all applicable provisions regarding standards of performance for new stationary sources as set forth in 40 CFR 60. There are no NSPSs applicable to the proposed equipment.

Regulation X – *National Emission Standards for Hazardous Air Pollutants*. Pursuant to Regulation X, MCC is required to comply with all applicable ATCMs, which, in the case there are none that are applicable to the proposed project.

Regulation XII – *Title V Permits*
This regulation contains requirements for sources which must have a FOP. MCC currently has a FOP and is expected to comply with all applicable rules and regulations.

Rule 1201 – *Federal Operating Permit Definitions.* MCC is defined as a federal Major Facility pursuant to this rule.

Rule 1203 – *Federal Operating Permits*. This document represents the preliminary determination for the proposed modifications to MCC's FOP. This proposed Minor Modification will also be properly noticed pursuant to District Rule 1207, as required.

Rule 1205 – *Modifications of Federal Operating Permits*. The proposed equipment classifies as a Minor Modification to MCC's Federal Operating Permit (FOP), and subsequently, this permit modification is issued in accordance with the provisions of District Rule 1203.

Rule 1208 – *Certification*. MCC included a Certification of Responsible Official as required with the submitted application for the proposed equipment.

Rule 1211 – *Greenhouse Gas Provisions of Federal Operating Permits*. MCC is a Major GHG Facility pursuant to Rule 1211. MCC's FOP includes all the requirements of this rule.

Regulation XIII – *New Source Review*
Rule 1302 – *Procedure*. This rule applies to all new or Modified Facilities and requires certain requirements to be fulfilled when submitting an application. All applicable requirements of this rule are discussed in this NSR document as part of the Analysis procedure. Certification of compliance with the Federal Clean Air Act, applicable implementation plans, and all applicable District rules and regulations have been addressed. The Authority to Construct (ATC) application package for the proposed equipment includes sufficient documentation to comply with Rule 1302(D)(5)(b)(ii). Permit conditions for the proposed project will require compliance with Rule 1302(D)(5)(b)(iii).

Rule 1303 – *Requirements*. This rule requires BACT and offsets for selected facility modifications. Equipment installed shall meet BACT and prior to the commencement of construction the proponent shall have obtained sufficient offsets to comply with Rule 1303(B)(1). MCC will comply with the BACT requirements of District Rule 1303 by installing the Dust Collector for the Slurry Lime Injection Storage Silo with a certified emission loading of 0.01 grains per dry standard cubic foot. MCC's proposed project does not require offsets as SERs were used to result in no emission increase.

Rule 1304 – *Emissions Calculations*. The Proposed Emissions from the proposed modifications were calculated pursuant to section (B)(1)(a).

Rule 1320 – *New Source Review for Toxic Air Contaminants*. Pursuant to the requirements of District Rule 1302, an applicability analysis of state and federal air toxic regulations was conducted for the proposed modifications (State T-NSR and Federal T-NSR, respectively) and is discussed in further detail in section (B)(6), above.

Rule 1520 – *Control of Toxic Air Contaminants from Existing Sources*. The proposed project is subject to Rule 1520, as MCC has a facility PTE greater than ten (10) tons per year for VOC, PM, and NO_x, as well as a PTE to emit a TAC (Section (B)(1)(a) and (c)). A Toxic 'Hot Spots' Program Analysis was conducted pursuant to section (E) of District Rule 1520. Facility Prioritization Scores were calculated pursuant to this rule and the results of the analysis is discussed in further detail in section (B)(6), above.

Regulation XVII – *Prevention of Significant Deterioration*
Please take notice that this regulation is not currently used within the MDAQMD because the USEPA has not delegated authority for the PSD Program to the MDAQMD at this time.

State Regulations

None applicable to the proposed project.

Federal Regulations

None applicable to the proposed project.

8. Conclusion

The District has reviewed the proposed modifications and application for MCC and conducted a succinct written analysis as required by District Rule 1302, section (D)(1)(b) and District Rule 1203, section (B)(1)(a). The District has determined that the proposed modifications and application are in compliance with all applicable District, state, and federal rules and regulations as proposed and when operated in terms of the permit conditions given below, and the attached revised FOP.

9. Permit Conditions

The following are draft Authority to Construct District permits. For the modifications to the FOP, please refer to page 2, section "PERMIT REVISIONS".

SLURRY LIME INJECTION SYSTEM; B011738:

Dry lime, purchased from various sources, is delivered by truck and off-loaded to the Lime Storage Silo. Lime is transferred from the Lime Storage Silo to the Batch tank where plant water is added to make Lime Slurry. Lime Slurry is pumped to the Day Tank, on the fifth floor of the Preheat Tower where it is metered into injection points in to the kiln exhaust within the north and south downcomers.

Capacity (MMBtu/hr)	Equipment Name
0	12'd X 70'h, Lime Storage Silo (100 ton capacity)
0.35	Arch Breaker rated at 0.35 bhp

Capacity (MMBtu/hr)	Equipment Name
0.75	Screw Feeder rated at 0.75 bhp
1.5	Moisture Isolation Injector rated at 1.5 bhp
0.01	Mixer rated at 2 bhp
1.5	Transfer Pumps (2 units rated at 0.75bhp, each)
0	Dust Collector (District Permit C011737)
0	48"d X 40"h, Batch Tank (260 gallon capacity)
0	27"d X 51"h, Day Tank (500 gallon capacity)
2	Mixer rated at 2 bhp
0	95" X 64" X 72", Metering Pump Skid
3	Metering Pumps (3 units rated at 1 bhp, each)

PERMIT CONDITIONS; (UNLESS OTHERWISE STATED ALL CONDITIONS RESULT FROM RULE 204 - PERMIT CONDITIONS; VERSION IN SIP = CARB EX. ORDER G-73, 40 CFR 52.220(C)(39)(II)(B) - 11/09/78 43 FR 52237; CURRENT RULE VERSION = 07/25/77:

1. This equipment shall be installed, operated and maintained in strict accordance with those recommendations of the manufacturer which produce the minimum emissions of contaminants. Unless otherwise noted, this equipment shall also be operated in accordance with all data and specifications submitted with the application for this permit.

2. The Lime Storage Silo associated with this Slurry Lime Injection system shall not receive material unless the associated air pollution control device under District permit C011737 is concurrently operating.

3. The owner/operator shall comply with all applicable Rules and Regulations of the District. Applicable rules include, but are not limited to Rules 401, 402, 403 and 430.

4. This system is limited to 4000 tons per year of Lime product.
[District Rule 1303 - NSR Requirements]

5. Product unloading from truck(s) to the Lime Storage Silo of this Slurry Lime Injection system is limited to less than 200 hours per year.
[District Rule 1303 - NSR Requirements]

6. The owner/operator shall record all deliveries of the product unloaded from truck(s) to the Lime Storage Silo of this Slurry Lime Injection system to demonstrate compliance with condition 4 and 5, above.

7. This equipment shall be operated in compliance with all applicable requirements of 40 CFR 63 Subpart LLL - National Emission Standards for Hazardous Air Pollutants From the Portland Cement Manufacturing Industry.

DUST COLLECTOR FOR SLURRY LIME INJECTION STORAGE SILO; C011737:

A Donaldson Torit, Model 16FS6; Serial TBD, equipped with sixteen (16) 6'-long polyester bags, providing a total filter/cloth area of 160 sq. ft. at a ratio of 6.25:1, with a 3 bhp fan exhausting a maximum of 1000 acfm. Polyester bags are 99.9% efficient with an emission loading of 0.01 gr/dscf. Baghouse includes a reverse pulse cleaning system and a differential pressure gauge (optimal operating range shall be maintained below 6.0 inches of water column).

PERMIT CONDITIONS; (UNLESS OTHERWISE STATED ALL CONDITIONS RESULT FROM RULE 204 - PERMIT CONDITIONS; VERSION IN SIP = CARB EX. ORDER G-73, 40 CFR 52.220(C)(39)(II)(B) - 11/09/78 43 FR 52237; CURRENT RULE VERSION = 07/25/77:

1. This equipment shall be installed, operated and maintained in strict accordance with those recommendations of the manufacturer which produce the minimum emissions of contaminants. Unless otherwise noted, this equipment shall also be operated in accordance with all data and specifications submitted with the application for this permit.

2. The owner/operator shall maintain a record of repairs and maintenance on this equipment and submit it to the District upon request. The record shall be retained for a minimum period of five (5) years.

3. This air pollution control device shall be fitted with an operating air lock system on each material discharge port and shall be provided with a differential pressure measuring device. The nominal design operational/differential pressure range shall be maintained below 6 inches or water column.

4. The owner/operator shall maintain on-site, as a minimum, an inventory of replacement bags that assures compliance these conditions.

5. This air pollution control device shall operate concurrently with the loading of the Slurry Lime Injection system storage silo under District Permit B011738.

6. This air pollution control device shall discharge no more than 0.09 pounds per hour of PM10 at a maximum concentration of 0.01 grains/dscf at the operating conditions given in the above description.
[MD Rule 1303 – NSR Requirements]

7. This air pollution control device shall be operated in compliance with all applicable requirements of 40 CFR 63 Subpart LLL - National Emission Standards for Hazardous Air Pollutants From the Portland Cement Manufacturing Industry.

8. This air pollution control device shall not discharge into the atmosphere an exhaust stream that exhibits greater than ten percent opacity.

9. The owner/operator shall conduct periodic opacity monitoring per NESHAP Subpart LLL requirements.

10. Unless required by NESHAP Subpart LLL requirements, this equipment does not require a regularly scheduled emission compliance test.
However, emission compliance testing may be required at the discretion of the District.
[MD Rule 1303 – NSR Requirements]

C. Title V Permit/FOP, Significant Permit Modification

1. Changes to FOP

Please refer to page 2, section "PERMIT REVISIONS" for a detailed list of the changes to MCC's Federal Operating Permit.

2. CAM Analysis

The Compliance Assurance Monitoring (CAM) rule (40 CFR 64) applies to each Pollutant Specific Emissions Unit (PSEU) when it is located at a Major Facility that is required to obtain Title V, Part 70 or 71 permit and it meets all of the following criteria. "PSEU" means an emissions unit considered separately with respect to each regulated air pollutant.

The PSEU must:
a. Be subject to an emission limitation or standard; AND,
b. Use a control device to achieve compliance; AND,
c. Have the **potential pre-control** emissions that exceed or are equivalent to the major source threshold.

The MCC facility does not satisfy the criteria specified in "a", "b", and "c" above; therefore, the proposed equipment is not subject to CAM.

D. Public Comment and Notifications

1. Public Comment

The preliminary determination was submitted to USEPA and CARB pursuant District Rule 1205 for a forty-five (45) day review period. The final modified FOP shall be issued on or about May 13, 2013.

Any comments on the Preliminary Decision/Determination shall be forwarded to:

Eldon Heaston, Executive Director
Mojave Air Quality Management District
14306 Park Avenue
Victorville, CA 92392

Submittal Date to EPA/CARB review: April 1, 2013
EPA/CARB 45-day Commenting Period ends: May 15, 2013
Permit Issue date: On or about May 17, 2013

2. Notifications

All correspondence as required by District Rules 1302 and 1205 were forwarded to (including written and electronic notification to USEPA at the start of the review period):

Director, Office of Air Division
United States EPA, Region IX
75 Hawthorne Street
San Francisco, CA 94105

Chief, Stationary Source Division
California Air Resources Board
P.O. Box 2815
Sacramento, CA 95812

David M. Rib
Environmental Manager
Mitsubishi Cement Corporation
5808 State Highway 18
Lucerne Valley, CA 92356-9691

Appendix A
Application

MITSUBISHI CEMENT CORPORATION
CUSHENBURY PLANT, 5808 STATE HIGHWAY 18, LUCERNE VALLEY, CA 92356-9691 TELEPHONE (760) 248-7373

January 11, 2013

Mr. Alan De Salvio
Mojave Desert Air Quality Management District
14306 Park Avenue
Victorville, CA 92392

13 JAN 14 PM 1:04
RECEIVED
MDAQMD

Subject: Mitsubishi Cement Corporation (MCC), Facility # 011800001,
Slurry Lime Injection System Application

Dear Mr. De Salvio,

Lime Injection System Permit
Mitsubishi Cement Corporation (MCC) plans to install a Slurry Lime Injection (SLI) system, as a strategy to meet the upcoming changes in EPA NESHAP regulations which require control of hydrochloric acid (HCl). Dry lime or similar sorbent will be utilized in dry form, mixed on-site into slurry, and transported to an injection point downstream of the pre-heater tower. The formed salts will be removed in the existing exhaust dust collectors.

Emissions
Particulate emissions from this new equipment are expected to be very minor. There is a bin vent on the lime storage silo, and potential fugitive emissions from system throughput. The total particulate emissions are estimated to be approximately 20 pounds per year. A Simultaneous Emission Reduction (SER) is proposed from removal of two emergency generators from service. Therefore this application may be considered emission neutral, and a "minor modification" for Title V amendment.

Enclosed is a permit application form, application fee, and Title V application forms for these modifications.

Please contact me at (760) 248-5184 or at drib@mitsubishicement.com if you have any questions or need more information.

Sincerely,

David M Rib

David M. Rib
Environmental Manager
Mitsubishi Cement Corporation

Surry Lime Injection System Equipment List

Storage silo:	12'Ø x ~70', capacity = 100 ton (1) Arch Breaker with 0.35 hp motor (1) Screw Feeder with 0.75 hp motor (1) Moisture isolation injector, 1.5 hp (1) Mixer with 2 hp motor (2) Transfer pumps with 0.75 hp motors (1) Bin vent dust collector with ~3 hp motor
Batch Tank	260 Gallons, 48"Ø x 40" H
Day Tank:	500 Gallons, 57"Ø x 51" H (1) Mixer with ~2 hp motor
Metering pump skid:	95" x 64" x 72" (3) Metering pumps with ~1 hp motors

Sorbent System Particulate Emissions

The silo bin vent fan motor is 460/3/60, 3hp and air flow is ~1000 acfm. The collector has 16 bag filters for a total of 147 sq.ft. polyester media. The approximate filtration air/cloth ratio is 6.8:1. Estimated efficiency is 99.9% and expected emission loading is 0.01 grains/dscf. Exhaust vent dimensions are not yet known.

Bin venting is only during product unloading (from truck to silo), which should be less than 1 hour per load and 2 loads per week ~= 104 hrs/year. Using double that (200 hrs) for a conservative estimate gives the calculation below (assumed acf~= dscf).

1000 acfm x 60 min/hr x 200 hr/yr x 0.01 gr/dscf / (7000 gr/lb) = 17 lb/yr PM10

Process fugitive emissions are estimated using factors from the MDAQMD Emissions Inventory Guide (April 2000), for an estimated throughput of 2000 tons per year of dry lime and a fugitive control factor of 95%.

2000 tpy lime x 2 transfer points x 0.014 lb PM10/ton x (1-0.95) = 3 lb/yr PM10

So the total estimated PM10 emission is ~20 lb/yr.

Two emergency generators were removed from service during 2012 and those permits will be surrendered for SER credit. The two units are permits E7911 and E8208. Neither of these units has been operated during a power outage for several years, so their only activity was for periodic readiness testing.

The reported actual emissions from the last two full years in service are documented in the CEIR reports, Table 9C (attached) as: 2010, 1+31= 32 lb PM10 and for 2011, 0+27= 27 lb PM10. So an average is 29 lb/yr PM10 reduction. This more than offset estimated emissions from the lime system.

MOJAVE DESERT AIR QUALITY MANAGEMENT DISTRICT
14306 Park Avenue, Victorville, CA 92392-2310
(760) 245-1661 Facsimile: (760) 245-2022
www.mdaqmd.ca.gov
Eldon Heaston
Executive Director

RECEIVED MDAQMD 13 JAN 14 PM 1:04

APPLICATION FOR AUTHORITY TO CONSTRUCT AND PERMIT TO OPERATE

REMIT $236.00 WITH THIS DOCUMENT ($135.00 FOR CHANGE OF OWNER)

1. Permit To Be Issued To (company name to receive permit): Mitsubishi Cement Corporation	1a. Federal Tax ID No.: 33-0278414
2. Mailing/Billing Address (for above company name): 5808 State Highway 18 Lucerne Valley, CA 92356	
3. Facility or Business License Name (for equipment location): (same)	
4. Facility Address - Location of Equipment (if same as for company, enter "Same"): (same)	Location UTM or Lat/Long: UTM (Km) 489E/3863N

5. Contact Name/Title: David Rib, Environmental Manager	Email Address: drib@mitsubishicement.com	Phone/Fax Nos.: (760) 248-5184

6. Application is hereby made for Authority To Construct (ATC) and Permit To Operate (PTO) the following equipment:
New Slurry Lime injection system for control of HCl emissions

Air Pollution Control Equipment, if any (note that most APCE require a separate application):

7. Application is for: [X] New Construction [ ] Modification* [ ] Change of Owner*	For modification or change of owner: *Current Permit Number: _____

8. Type of Organization (check one):
[ ] Individual Owner [ ] Partnership [X] Corporation [ ] Utility [ ] Local Agency [ ] State Agency [ ] Federal Agency

9. General Nature of Business: Cement manufacture	Principal Product: Portland cement	SIC Code (if known): 3241

10. Distances (feet and direction to closest):
1000 N Fenceline 6600 N Residence 5300 N Business 22,000 N School

11. Facility Annual Throughput by Quarters (percent): 25 % Jan-Mar; 25 % Apr-Jun; 25 % Jul-Sep; 25 % Oct-Dec	12. Expected Facility Operating Hours: ___ Hrs/Day; ___ Days/Wk; ___ Wks/Yr; 8040 Total Hrs/Yr

13. Do you claim Confidentiality of Data (if yes, state nature of data on reverse in Remarks)? [ ] Yes [x] No

14. Signature of Responsible Official: David M Rib	Official Title: Environmental Manager	
Typed or Printed Name of Responsible Official: David Rib	Phone Number: (760) 248-5184	Date Signed: 01/11/2013

- For District Use Only -

Application Number:	*Invoice Number:*	*Permit Number:*	*Company/Facility Number:*
MDI00000362	MD 1339	B011738	118/1

MOJAVE DESERT AIR QUALITY MANAGEMENT DISTRICT
GENERAL APPLICATION, continued

15. Stack Emissions Information:

Stack No.	Stack Height	Stack Diameter	Exhaust Temp	Exhaust Flow Rate	Exhaust Velocity
1	bin vent exhaust characteristics not yet known				
2					
3					

(list additional stacks on a separate sheet)

Stack Height is the distance above ground level to discharge point (feet)
Stack Diameter is the diameter (or equivalent circular diameter) of discharge point (nearest tenth foot)
If using cross-sectional area (A in square feet), equivalent diameter is D = (1.273A)^0.5
Exhaust Temp in degrees F, acutal or estimated to nearest 50 deg F
Exhaust Flow Rate at discharge point in actual cubic feet per minute (ACFM)
Exhaust Velocity in feet per second, design or measured

16. Remarks (basis for confidentiality of data, process description, modification description, etc.):
Process equipment list attached to cover letter. Lime or similar material to be injected into kiln exhaust to control HCl emissions. Injection may be dry or wet, normally as a slurry.
Resulting salts to be removed by existing dust collection at KMDC

If you wish to specify process information as proprietary or confidential, space is provided for this purpose. The kinds and rates of emissions may not be held confidential; emissions are subject to public disclosure.

MOJAVE DESERT AIR QUALITY MANAGEMENT DISTRICT
14306 Park Avenue, Victorville, CA 92392-2310
(760) 245-1661 Facsimile: (760) 245-2022
www.mdaqmd.ca.gov
Eldon Heaston
Executive Director

APPLICATION FOR AUTHORITY TO CONSTRUCT AND PERMIT TO OPERATE

REMIT $236.00 WITH THIS DOCUMENT ($135.00 FOR CHANGE OF OWNER)

1. Permit To Be Issued To (company name to receive permit): Mitsubishi Cement Corporation	1a. Federal Tax ID No.: 33-0278414
2. Mailing/Billing Address (for above company name): 5808 State Highway 18 Lucerne Valley, CA 92356	
3. Facility or Business License Name (for equipment location): (same)	
4. Facility Address - Location of Equipment (if same as for company, enter "Same"): (same)	Location UTM or Lat/Long: UTM (Km) 489E/3863N

5. Contact Name/Title:	Email Address:	Phone/Fax Nos.:
David Rib, Environmental Manager	drib@mitsubishicement.com	(760) 248-5184

6. Application is hereby made for Authority To Construct (ATC) and Permit To Operate (PTO) the following equipment:
Bin vent on lime storage tank in new Slurry Lime injection system

Air Pollution Control Equipment, if any (note that most APCE require a separate application):

7. Application is for:	For modification or change of owner:
[X] New Construction [ ] Modification* [ ] Change of Owner*	*Current Permit Number: _____

8. Type of Organization (check one):
[ ] Individual Owner [ ] Partnership [X] Corporation [ ] Utility [ ] Local Agency [ ] State Agency [ ] Federal Agency

9. General Nature of Business:	Principal Product:	SIC Code (if known):
Cement manufacture	Portland cement	3241

10. Distances (feet and direction to closest):
1000 N Fenceline 6600 N Residence 5300 N Business 22,000 N School

11. Facility Annual Throughput by Quarters (percent):				12. Expected Facility Operating Hours:			
25 %	25 %	25 %	25 %				8040
Jan-Mar	Apr-Jun	Jul-Sep	Oct-Dec	Hrs/Day	Days/Wk	Wks/Yr	Total Hrs/Yr

13. Do you claim Confidentiality of Data (if yes, state nature of data on reverse in Remarks)? [ ] Yes [x] No

14. Signature of Responsible Official:	Official Title:	
David M Rib	Environmental Manager	
Typed or Printed Name of Responsible Official:	Phone Number:	Date Signed:
David Rib	(760) 248-5184	03/05/2013

- For District Use Only -

Application Number:	*Invoice Number:*	*Permit Number:*	*Company/Facility Number:*
MD469	MD 1339	CD11737	118/1

MOJAVE DESERT AIR QUALITY MANAGEMENT DISTRICT
GENERAL APPLICATION, continued

15. Stack Emissions Information:

Stack No.	Stack Height	Stack Diameter	Exhaust Temp	Exhaust Flow Rate	Exhaust Velocity
1	~80 ft.	7.9 inches	ambient	~1,000 cfm	~49 fps
2					
3					

(list additional stacks on a separate sheet)

Stack Height is the distance above ground level to discharge point (feet)
Stack Diameter is the diameter (or equivalent circular diameter) of discharge point (nearest tenth foot)
If using cross-sectional area (A in square feet), equivalent diameter is D = (1.273A)^0.5
Exhaust Temp in degrees F, acutal or estimated to nearest 50 deg F
Exhaust Flow Rate at discharge point in actual cubic feet per minute (ACFM)
Exhaust Velocity in feet per second, design or measured

16. Remarks (basis for confidentiality of data, process description, modification description, etc.):

Bin vent on dry lime storage tank for new lime slurry injection system.

- Dust Collector is Donaldson Torit 16FS6 Pulse Jet Bin Vent
- Filter media is polyester, 16 bags with total area of 160 sq. ft.
- Fan is Torit TRB3 with 3 HP motor, and outlet vent 7.9" diameter (round) discharging out horizontally.
- Air flow estimated at ~1000 cfm

If you wish to specify process information as proprietary or confidential, space is provided for this purpose. The kinds and rates of emissions may not be held confidential; emissions are subject to public disclosure.

Donaldson.
Filtration Solutions

Donaldson Company, Inc.
Industrial Air Filtration
1400 West 94th Street
Bloomington, MN
55431-2370

Mailing Address:
P.O. Box 1299
Minneapolis, MN
55440-1299 U.S.A.

Tel 952-887-3847
Fax 952-698-2479
www.Donaldson.com
www.donaldsontorit.com

Mitsubishi Cement
Attn: Richard Woltil
Address: 5808 State Highway 18
Lucerne Valley, CA 92356

November 6, 2012

Reference: Mitsubishi Cement Emission Guarantee for a Donaldson® Torit® Model 16FSD6 Dust Collector with Dura-Life™ Filters.

Equipment	One (1) Donaldson Torit Model 16FSD6 dust collector with (16) 6'-long Dura-Life filter bags.
Application	Silo bin vent running only when shipments, about 2 hours per week.
Dust	Hydrated Lime
Inlet Loading	< 5 gr/dscf
Air Volume	1000 CFM
Gas Stream	Ambient
Collector Location	Outdoors
Collector Exhaust	Outdoors

The Donaldson® Torit® Model 16FSD6 Collector equipped with (16) Donaldson Torit Dura-Life™ filters offers a net filtration area of 160 square feet. Dividing the actual air volume by the filtration area provides a net air-to-media ratio of 6.25:1. Based on the Donaldson Torit Model 16FSD6 Collector being installed and operated in accordance with the FS Installation, Operation, and Maintenance Manual; accepted industrial ventilation practices; and under the conditions stated above, we are offering the following emission guarantee utilizing Donaldson Torit Dura-Life filters. This guarantee does not cover filter failure due to negligence or improper operation and specifically excludes failure due to exceeding the recommended air-to-media ratio; damage due to fire, corrosion, abrasion or physical abuse; wet or oily compressed air usage, or the lack of adequate compressed air for proper filter cleaning.

Emission: The maximum average particulate emissions in the discharge gas stream from the Donaldson Torit 16FSD6 Collector using the Donaldson Torit Dura-Life filters will not exceed 0.01 grains per dry standard cubic foot over the life of the media.

The guarantee period ends after 4000 hours of operation or 24 months from the date of shipment, whichever is shorter. This provides ample time to confirm performance meets the stipulated thresholds in this document.

[The emissions portion of this warranty requires that all emission testing be performed by a qualified testing agency agreed upon by Donaldson Company and Mitsubishi Cement. Such testing will be performed in accordance with recognized testing procedures, agreed upon by both Donaldson Company and Mitsubishi Cement. Fees for the testing will be the responsibility of Mitsubishi Cement.]

Pressure Drop: Average pressure drop not to exceed 6.0 inches of water gauge on a continual basis as measured across Donaldson Torit Dura-Life filter media and tube sheet of the Torit 16FSD6 collector.

During the warranty period, Donaldson Company reserves the right to make any modifications, adjustments or take other necessary corrective actions, at Donaldson's expense, should the guarantee not be met by equipment malfunction due to defects in materials and/or workmanship as supplied by Donaldson Company. In no event shall Donaldson Company be liable for incidental, special or consequential damages resulting from nonconformity. Failure to use genuine Donaldson replacement parts or changes to the original system, either process or engineering, will cancel this guarantee.

Regards,

Mike Casey
Director of Aftermarket and Technical Services

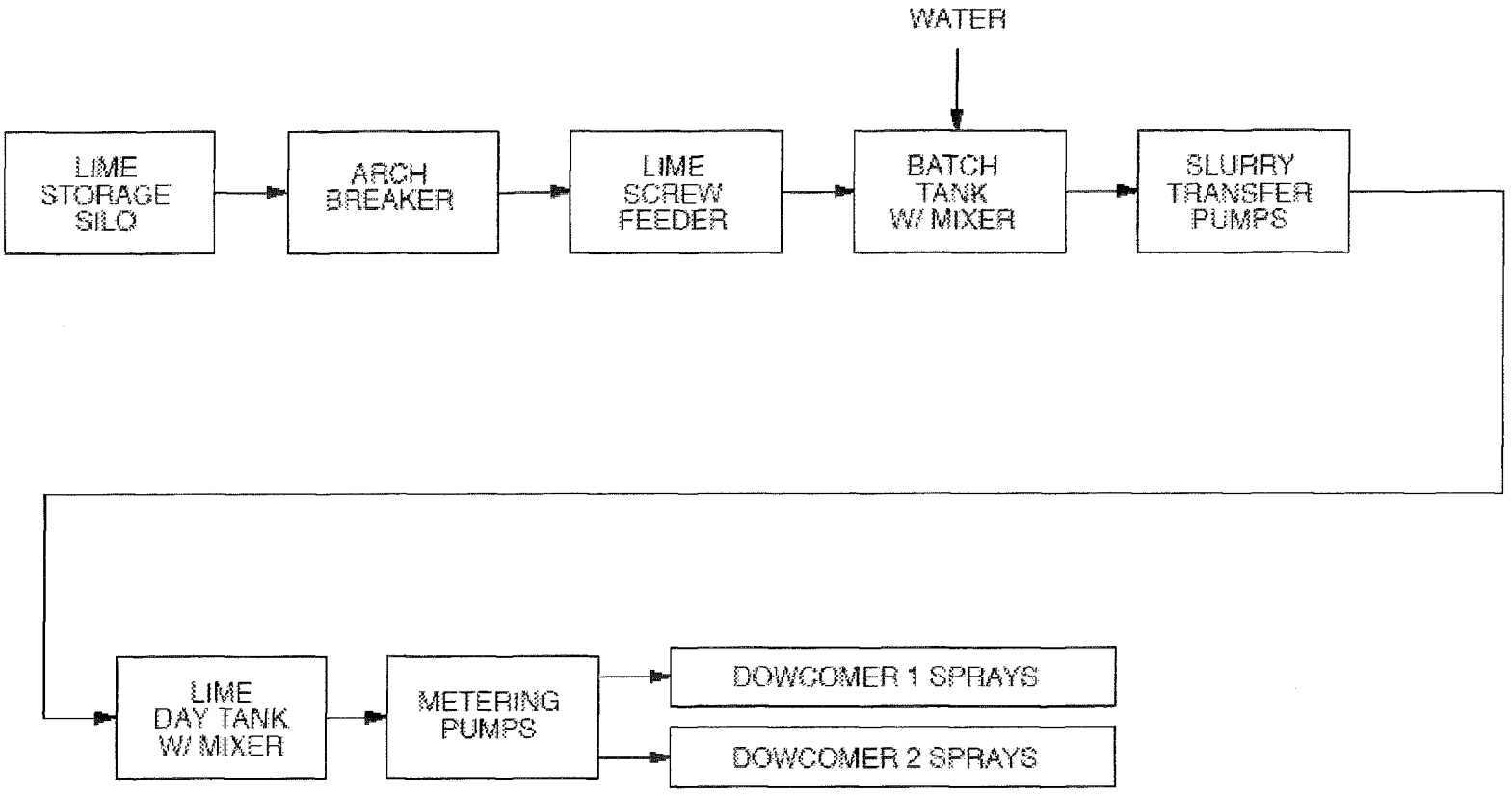

Slurry Lime Injection System

Mitsubishi Cement Simplified Flow Diagram

TABLE 9C

TAC EMISSIONS FROM PERMITTED AND UNPERMITTED DIESEL IC ENGINES FOR 2010

Permit Number	Name	Fuel Usage	PM_{10} emissions	
		gal/year	lbs/year	lbs/hr[1]
Permitted Equipment				
B003512	Joy Compressor	0	0	--
B003513	Ingersoll Rand Compressor	53	2	0.319
B009469	Ingersoll Rand Compressor 185 CFM	35	1	0.117
B009470	Ingersoll Rand Compressor 185 CFM	340	11	0.117
B009472	Ingersoll Rand Compressor 185 CFM	158	5	0.117
E007911	IC Engine, Emergency Diesel Generator	25	1	1.07
E007913	IC Engine, Emergency Diesel Generator	224	9	3.16
E008201	IC Engine, Emergency Diesel Generator	0	0	--
E008203	IC Engine, Emergency Diesel Generator	47	2	0.223
E010297	Emergency Generator - Control Building	911	39	2.579
E010971	Emergency Generator - Packhouse Area	277	12	1.960
B009467	Caterpillar Gen. Set	48	2	0.134
E008202	Caterpillar Gen. Set 3512B module	741	31	4.49
B009464	Lincoln Welder	564	19	0.119
B009465	Lincoln Welder	483	16	0.119
B009466	Lincoln Welder	497	17	0.119
B009462	Lincoln Welder 400 AMP	1,139	38	0.114
B009929	Lincoln Welder 400 AMP	515	17	0.085
B009463	CAT Powered Blower	0	0	--
Unpermitted Equipment				
Unpermitted	All unpermitted IC engines	22,106	390	1.31

Calculation Factors

42.48 lbs/1000 gal; MDAQMD default EF for PM_{10} for diesel IC engines greater than 100 hp

33.50 lbs/1000 gal; MDAQMD default EF for PM_{10} for diesel IC engines less than 100 hp

Notes:

1. Maximum lbs/hr = (0.05 gal/HP-hr * HP * lb/yr PM_{10} emissions) / (gal/yr)

SUBMISSION CERTIFICATION (MDAQMD FORM 1202-A)

SUBMISSION CERTIFICATION
(Please Print or Type)

I, _____Jim Russell_____, a responsible official of
(Name of Official)

____Mitsubishi Cement Corporation__, hereby certify that, based
(Name of Facility)

upon information and belief formed after a reasonable inquiry, the

following information, consisting of ___FOP Minor Modification____
(Title(s) of Document(s))

____request application_____

(_10_ Pages), is true, accurate and complete. Executed this _11th_
(Day)

day of ___January___, _2013_ at __San Bernardino County, CA_.
(Month) (Year) (County and State)

David M Rob for
(Signature)

Jim Russell, Plant Manager
(Name and Title)

Name of Facility: ___Mitsubishi Cement Corporation_____

Address: ___5808 State Highway 18 _____

_____

City/State/Zip: _____Lucerne Valley, CA 92356_____

This Form is required to be completed and attached to all Federal Operating Permit and Rule 221 submittals to the MDAQMD pursuant to MDAQMD Rule 1208. **Submissions which do not contain this form will be rejected.**

FACILITY SUMMARY (MDAQMD FORM 1202-B1)

I. FACILITY IDENTIFICATION: Attach supplemental sheets if required.

1. Company Name: Mitsubishi Cement Corporation

2. Four digit SIC Code: 3241

3. Facility Name (if different than company name): _____

4. Mailing Address: 5808 State Highway 18 Lucerne Valley, CA 92356

5. Street Address or Source Location: (same)

6. UTM Coordinates (If known): UTM (Km) 489E/3863N

7. Facility located within 50 miles of state line: [ ] Yes [X] No

8. Facility located within 1000 feet of a school: [ ] Yes [X] No

9. Type of Organization (Please check one): [X] Corporation
   [ ] Sole Ownership [ ] Government [ ] Partnership
   [ ] Utility Company [ ] Other _____

10. Legal Owner's Name: Mitsubishi Cement Corporation

11. Owner's Agent Name: N/A

12. Plant or Site Manager/Contact: David Rib

    Telephone Number: (760) 248-5184

13. Type of facility: Portland cement manufacture

14. General description of processes/products (Attach additional sheets if necessary):

Addition of a slurry lime injection system. Emissions are minimal from bin vent and fugitive sources.

A slurry lime system is intended to control emissions of hydrochloric acid to comply with upcoming changes in the US EPA NESHAP regulations.

Please attach a process diagram(s) or engineering schematic(s) which identify all emission points or units. Please identify and give dimensions of all exhaust stacks, indicate flow of material(s), material transfer points and other process likely to cause emissions.

FACILITY SUMMARY (MDAQMD FORM 1202-B1)

15. Is a Risk Management Plan Required? [ ] Yes [X] No
(If yes, attach verification that the Risk Management Plan is registered with the appropriate agency.)

16. Please list all facility equipment and processes currently permitted by the MDAQMD. Please include MDAQMD Permit number and permit unit description (Attach additional sheets as necessary.):

_____See current Title V permit for Facility 11800001._____

_____Current version dated August 24, 2012._____

PLEASE NOTE: Exempt equipment is to be listed on Form 1202-I)

COMPLIANCE PLAN (MDAQMD FORM 1202-J)

I. **APPLICABLE FEDERAL REQUIREMENTS LISTING:** (Consult MDAQMD Rules: 1201 (G),(H),(I); 1203 (D)(1)(c,d,e,g) for guidance.) Attach sheets if needed.

APPLICABLE FEDERAL REQUIREMENT[1]	EMISSION UNIT PERMIT NUMBER	IN COMPLIANCE yes, no or exempt[2]	EFFECTIVE DATE[3]
NSPS Subparts A and LLL, see list in Appx B of current FOP	B001025	Yes	

1 Complete Forms 1202-K and 1202-L for each applicable federal requirement listed above.
2 If exempt from applicable federal requirement, attach explanation for exemption.
3 Indicate the date during the permit term that the applicable federal requirement will become effective.

COMPLIANCE PLAN (MDAQMD FORM 1202-J)

4. Provide explanation of why any dates in the Schedule of Compliance were not or will not be met: N/A

5. Describe in chronological order preventive or corrective action taken: N/A

Note: MDAQMD Form 1202-A (Submission Certification) must be submitted to certify the information contained in this form and any other information submitted.

For federal applicable requirements for which the facility is not in compliance at the time of permit issuance, provide a **Compliance Schedule.** *[The compliance schedule shall contain a schedule of remedial measures, including an enforceable sequence of actions with milestones, leading to compliance with the federal applicable requirement. The compliance schedule is part of the variance granted by the hearing board and shall resemble, and be at least as stringent as that contained in any judicial consent decree or administrative order to which the facility is subject].*

COMPLIANCE CERTIFICATION (MDAQMD FORM 1202-K)

V. CERTIFICATION REPORT:

1. Compliance certifications shall be submitted (during the permit term):

[X] Annually [ ] More frequently (if specified by applicable federal requirement, or by order of the District), _____(specify frequency)

2. Compliance certification submittal dates:_January 31 of each year__

_____

3. State whether or not the facility is in compliance with stated applicable federal requirement and whether compliance was continuous or intermittent.

_____

____Yes, facility is in compliance_____

_____

_____

_____

4. Describe the compliance status of the facility with respect to applicable enhanced monitoring, and compliance requirements of Section 114(a)(3) of the Clean Air Act (attached sheets as needed):

_____

_____

_____

_____

_____

_____

_____

_____

_____

_____

_____

_____

_____

_____

_____

COMPLIANCE CERTIFICATION (MDAQMD FORM 1202-K)

VI. MONITORING REPORT INFORMATION:

Were deviations from monitoring requirements encountered during the reporting period?

[X] No [ ] Yes (If Yes, complete Form 1202-L)

VII. COMPLIANCE CERTIFICATION:

1. Was source in compliance during the reporting period specified in Section IV above and is source currently in compliance with all federal applicable requirements and permit conditions.

[X] Yes [ ] No (If no, submit/re-submit Forms 1202-J, 1202-K, and 1202-L, as applicable)

2. MDAQMD Form 1202-A (Submission Certification) must be completed and submitted by Facility Responsible Official to certify the information contained in this form and any other information submitted.

Emergency Generators Operating Hours

Eq. No.	Permit No.	Rated HP	Fuel Gal/hr	Total Hours of Operation per Year 2006	2007	2008	2009	2010	2011	2012
733-002	E007911	506	30	7	7	11	10	1	0	0
733-008	E008202	2116	108	13	8	13	9	7	6	1

Mojave Desert Air Quality Management District
14306 Park Avenue, Victorville, CA 92392-2310
760.245.1661 • FAX 760.245.2022

REQUEST TO CANCEL A PERMIT (ATC or PTO)

PERMIT ISSUED TO: Mitsubishi Cement Corporation

EQUIPMENT LOCATION (PHYSICAL ADDRESS): 5808 State Highway 18
Lucerne Valley, CA 92356

OWNER OR OPERATOR (DISTRICT COMPANY NUMBER): 0118

EQUIPMENT LOCATION (DISTRICT FACILITY NUMBER): 00001

PERMIT NUMBER(S) TO CANCEL: E007911, E008202

EQUIPMENT DESCRIPTION: Emergency Generators

CANCELLATION OF THE PERMIT DESCRIBED ABOVE IS HEREBY REQUESTED FOR THE FOLLOWING REASON:

- [x] Equipment sold, replaced, destroyed, or removed from premises (circle one).
- [ ] Equipment will no longer be used.
- [ ] Equipment is exempt from permit requirement by Rule 219 Section ____
- [ ] Replaced by Statewide Permit. Please attach copies of Statewide Permits.
- [ ] Other: _____

IT IS UNDERSTOOD THAT ANY FUTURE USE OF THIS EQUIPMENT MAY REQUIRE A NEW PERMIT APPLICATION IN ACCORDANCE WITH THE LAWS THEN IN EFFECT.

David M Rib
Signature, responsible member of organization

Environmental Manager
Title

David Rib
Printed Name

760-248-5184
Telephone No.

03-05-2013
Date

MDAQMD USE ONLY

Signature of Engineering Supervisor

Date

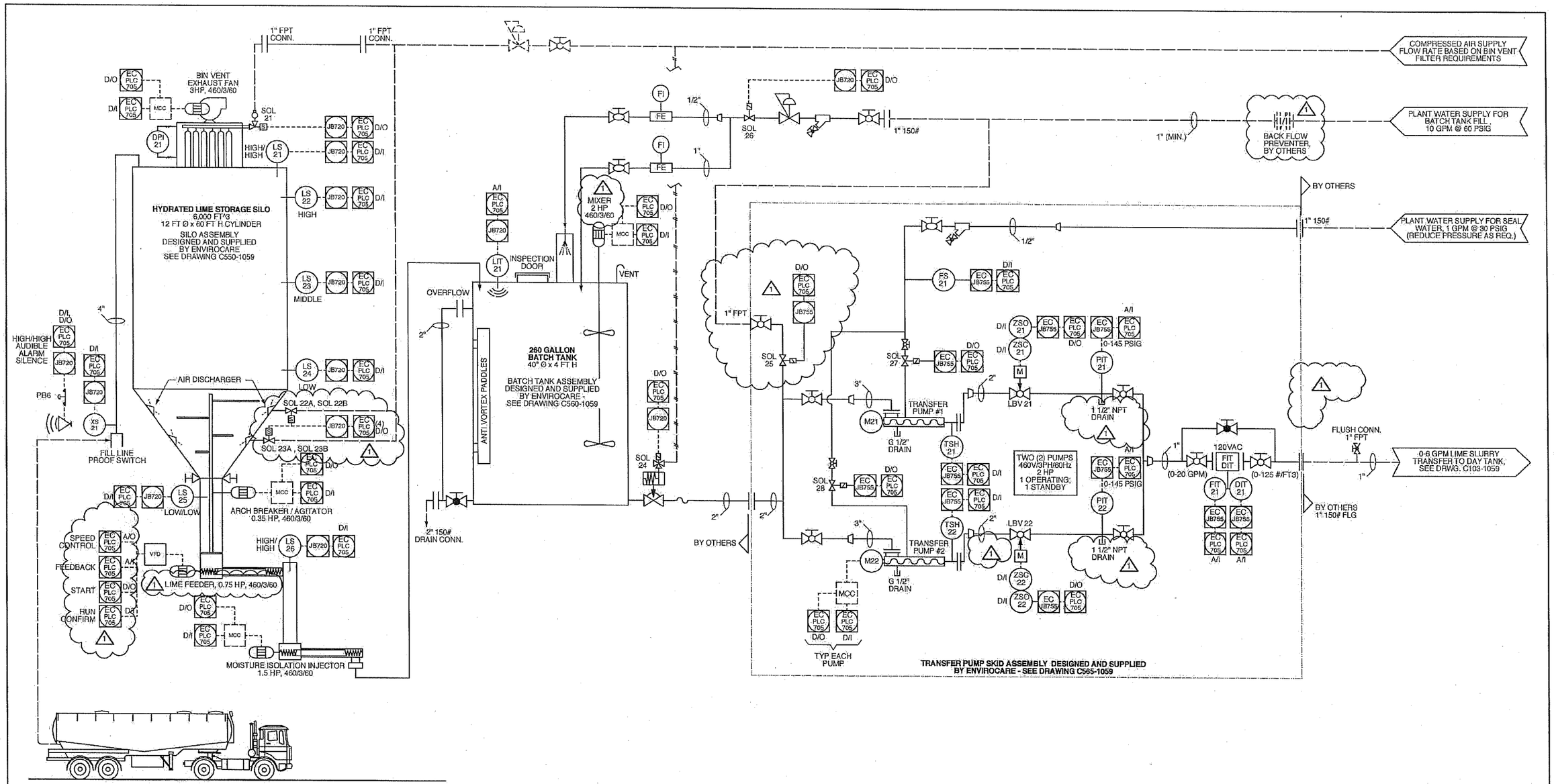

ECI MICROMIST PATENT #6142388
ECI MICROLIME PATENT #6060030

LEGEND

- DUAL BASKET STRAINER, CI BODY WITH SS PERFORATED BASKETS
- OR — MANUAL FULL PORT BALL VALVE, NORMALLY OPEN
- MANUAL FULL PORT BALL VALVE, NORMALLY CLOSED
- PROGRESSIVE CAVITY MULTISTAGE HORIZONTAL SLURRY PUMP
- KNIFE GATE
- BACK PRESSURE RELIEF VALVE
- FULL PORT BALL VALVE W/ ELECTRIC ACTUATOR
- DIAPHRAGM VALVE W/ PNEUMATIC SPRING RETURN ACTUATOR (FAIL CLOSE), 3-WAY PILOT SOLENOID VALVE
- FLOW CONTROL VALVE W/ PNEUMATIC ACTUATOR 4-20 mA INPUT SIGNAL W/ VISUAL INDICATOR
- FLANGE CONNECTION
- FE — MAGNETIC FLOWMETER WITH LCD
- CONDENSATE FLOAT TRAP
- SAFETY PRESSURE RELIEF VALVE
- ORIFICE PLATE
- CONCENTRIC REDUCER
- PIPING BY OTHERS OR EXISTING EQUIP.
- TYPE K THERMOCOUPLE
- PNEUMATIC SIGNAL
- ELECTRICAL SIGNAL
- EC RIO ## — ENVIROCARE REMOTE I/O ENCLOSURE
- EC JB # — ENVIROCARE JUNCTION BOX ENCLOSURE
- CCR — CLIENT CCR
- DISC ## — MOTOR DISCONNECT
- PROCESS DEVICE

ABBREVIATIONS

A/I - ANALOG INPUT SIGNAL
A/O - ANALOG OUTPUT SIGNAL
D/I - DIGITAL INPUT SIGNAL
D/O - DIGITAL OUTPUT SIGNAL
FE - FLOW ELEMENT
FI - FLOW INDICATOR
FIT - FLOW INDICATING TRANS.
FS - FLOW SWITCH
LBV - LIME BLOCK VALVE
LIT - LEVEL INDICATING TRANS.
LS - LEVEL SWITCH
M - MOTOR
MCC - MOTOR CONTROL CENTER
PI - PRESSURE INDICATOR
PIT - PRESSURE INDICATING TRANS.
PS - PRESSURE SWITCH
SOL - SOLENOID
TS - TEMPERATURE SWITCH
XS - TRUCK LOAD LIMIT SWITCH
ZSC - LIMIT SWITCH CLOSE
ZSO - LIMIT SWITCH OPEN

NOTES:

1. EQUIPMENT LAYOUT TO BE DETERMINED BY MCC, SILO, BATCH TANK, & TRANSFER PUMP SKID TO BE INSTALLED AT GRADE (EL. 4334.1 FT) ON THE NORTH SIDE OF BS#1.
2. TRANSFER PUMP SIZING BASED ON ELEVATION CHANGE BETWEEN PUMPS AND DAY TANK OF 166 FEET +/-.
3. MOTOR STARTERS TO BE SUPPLIED BY OTHERS.
4. 'EC JB 755' FACTORY MOUNTED TO TRANSFER PUMP SKID. SILO/BATCH TANK INSTRUMENTATION FIELD WIRED TO 'JB 720' OR DIRECTLY TO 'EC PLC 705' BY OTHERS.
5. PRODUCT CONTAINMENT SUPPLIED BY OTHERS AS REQUIRED.
6. HEAT TRACING AND INSULATION BY OTHERS AS REQUIRED.

DOCUMENT RELEASE

☐ Preliminary Issue ☐ Certified For Construction
☒ For Customer Approval ☐ As Built
BY R.G.K. DATE 8/24/12

SYM.	REVISION DESCRIPTION	BY	APP	DATE
1	AUTO FLUSH ADDED, MOVED FLUSH, CHGD DRAIN SIZE, ADDED SOL 22B & 23B	RAY	JMT	7.30.12

Confidentiality: All documents, plans, drawings, inventions, specifications, and information presented herein shall remain legal property of EnviroCare International, and shall not be used or communicated to others, altered, copied nor used for any other purpose than those for which prepared and/or supplied without written consent of EnviroCare International, and shall be returned immediately upon request. All Rights Reserved.

EnviroCare International
507 Green Island Road, American Canyon, CA 94503
Tel: 707/638.6800 Fax: 707/638.6898

TITLE: PROCESS AND INSTRUMENTATION DIAGRAM
HYDRATED LIME SILO & SLURRY BATCHING - NORTH & SOUTH DOWNCOMERS

DRAWN RAY	DATE 6.12.12	CLIENT: MITSUBISHI CEMENT CORPORATION
DESIGN RAY	DATE 6.12.12	
CHECK JTP	DATE 6.19.12	PROJECT: MicroFine LIME HCl ABATEMENT SYSTEM FOR MITSUBISHI CEMENT PLANT LUCERNE VALLEY, CA
APPR JMT	DATE 6.22.12	CONTRACT NO. 1059
SCALE NONE	DRAWING NO. C102-1059	SHEET 1 OF 1 REV 1

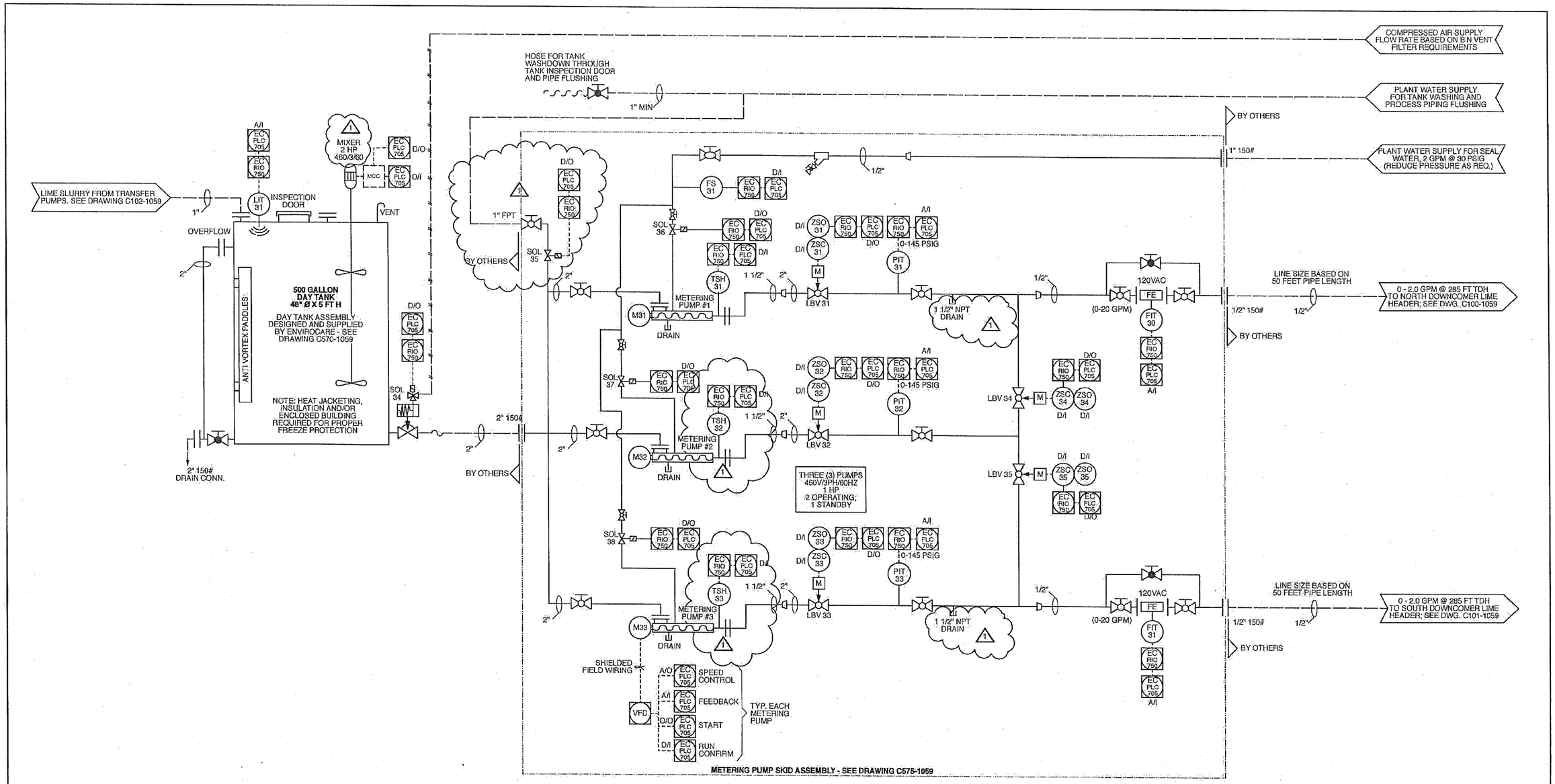

ECI MICROMIST PATENT #6142388
ECI MICROLIME PATENT #6060030

LEGEND

- DUAL BASKET STRAINER, CI BODY WITH SS PERFORATED BASKETS
- OR — MANUAL FULL PORT BALL VALVE, NORMALLY OPEN
- MANUAL FULL PORT BALL VALVE, NORMALLY CLOSED
- PROGRESSIVE CAVITY MULTISTAGE HORIZONTAL SLURRY PUMP
- CHECK VALVE
- BACK PRESSURE RELIEF VALVE
- FULL PORT BALL VALVE W/ ELECTRIC ACTUATOR
- FLOW CONTROL VALVE W/ PNEUMATIC ACTUATOR 4-20 mA INPUT SIGNAL W/ VISUAL INDICATOR
- FLANGE CONNECTION
- FIT / FE — MAGNETIC FLOWMETER WITH LCD
- T — CONDENSATE FLOAT TRAP
- SAFETY PRESSURE RELIEF VALVE
- ORIFICE PLATE
- CONCENTRIC REDUCER
- PIPING BY OTHERS OR EXISTING EQUIP.
- TYPE K THERMOCOUPLE
- PNEUMATIC SIGNAL
- ELECTRICAL SIGNAL
- EC PLC ##/## — ENVIROCARE PLC ENCLOSURE
- EC RIO ##/## — ENVIROCARE REMOTE I/O ENCLOSURE
- CCR — CLIENT CCR
- DISC ## — MOTOR DISCONNECT
- PROCESS DEVICE

ABBREVIATIONS

A/I - ANALOG INPUT SIGNAL
A/O - ANALOG OUTPUT SIGNAL
DIT - DENSITY INDICATING TRANS.
D/I - DIGITAL INPUT SIGNAL
D/O - DIGITAL OUTPUT SIGNAL
FIT - FLOW INDICATING TRANS.
FS - FLOW SWITCH
LBV - LIME BLOCK VALVE
LIT - LEVEL INDICATING TRANS.
LS - LEVEL SWITCH
M - MOTOR
MCC - MOTOR CONTROL CENTER
PI - PRESSURE INDICATOR
PIT - PRESSURE INDICATING TRANS.
PS - PRESSURE SWITCH
SOL - SOLENOID
TS - TEMPERATURE SWITCH
WE - WEIGH ELEMENT
WIT - WEIGHT INDICATING TRANS.
XS - TRUCK LOAD LIMIT SWITCH
ZSC - LIMIT SWITCH CLOSE
ZSO - LIMIT SWITCH OPEN

NOTES:

1. EQUIPMENT LAYOUT TO BE DETERMINED BY MCC. DAY TANK AND METERING PUMP SKID TO BE INSTALLED AT ON PREHEATER 5TH FLOOR (EL. 4500.1 FT) IN SAME GENERAL AREA.
2. METERING PUMP SIZING BASED ON ELEVATION CHANGE BETWEEN PUMPS AND SPRAY ELEVATION OF 37 FEET +/-.
3. MOTOR STARTERS TO BE SUPPLIED BY OTHERS. VFDS FOR METERING PUMPS SUPPLIED ENVIROCARE.
4. 'EC JB 750' (METERING PUMP PANEL) FACTORY MOUNTED TO METERING PUMP SKID. DAY TANK INSTRUMENTATION FIELD WIRED TO CUSTOMER SUPPLIED 'JB 730' OR DIRECTLY TO 'EC RIO 705' BY OTHERS.
5. PRODUCT CONTAINMENT SUPPLIED BY OTHERS AS REQUIRED.
6. HEAT TRACING AND INSULATION BY OTHERS AS REQUIRED.

DOCUMENT RELEASE

☐ Preliminary Issue ☐ Certified For Construction
☒ For Customer Approval ☐ As Built
BY R. Fink DATE 8/24/12

SYM	REVISION DESCRIPTION	BY	APP	DATE
1	JB 750 CHGD TO RIO 750, AUTO FLUSH INSTRU. ADDED, MOVED FLUSH TO SKID, CHGD DRAIN SIZE, MOVED TEMP SWITCH TO PUMP	RAY	JMT	7.30.12

Confidentiality: All documents, plans, drawings, inventions, specifications, and information presented herein shall remain legal property of EnviroCare International, and shall not be used or communicated to others, altered, copied nor used for any other purpose than those for which prepared and/or supplied without written consent of EnviroCare International, and shall be returned immediately upon request. All Rights Reserved.

EnviroCare International
507 Green Island Road, American Canyon, CA 94503
Tel: 707/638.6800 Fax: 707/638.6898

PROCESS AND INSTRUMENTATION DIAGRAM
LIME DAY TANK & METERING PUMP SKID - NORTH & SOUTH DOWNCOMERS

DRAWN RAY	DATE 6.19.12	CLIENT MITSUBISHI CEMENT CORPORATION	
DESIGN RAY	DATE 6.19.12		
CHECK JPT	DATE 6.21.12	PROJECT MicroFine LIME HCl ABATEMENT SYSTEM FOR MITSUBISHI CEMENT PLANT LUCERNE VALLEY, CA	
APP. JMT	DATE 6.22.12	CONTRACT NO 1059	SIZE D
SCALE NONE		DRAWING NO C103-1059	SHEET 1 OF 1 REV 1

Appendix B
HARP Data: Facility Prioritization

File: C:\HARP\PROJECTS\PET\Priority.txt

Facility Prioritization for District
Report date: 3/26/2013
Created by HARP Version 1.4f Build 23.11.01

Fac ID	Description	Multipler	Emission and Potency Procedure Cancer	Acute	Chronic	NonCancer	Dispersion Adjustment Procedure Cancer	Acute	Chronic	NonCancer	Total Score
Proximity Calc. Method: unknown											
11800001	device 20975	***	0.000	0.000	0.000	0.000	0.000	0.000	0.000	0.000	
11800001	device 20983	***	0.001	0.000	0.000	0.000	0.001	0.000	0.000	0.000	
11800001	device 20989	***	0.001	0.000	0.000	0.000	0.001	0.000	0.000	0.000	
11800001	device 20991	***	0.000	0.000	0.000	0.000	0.000	0.000	0.000	0.000	
11800001	device 20993	***	0.000	0.000	0.000	0.000	0.000	0.000	0.000	0.000	
11800001	device 21007	***	0.000	0.000	0.000	0.000	0.000	0.000	0.000	0.000	
11800001	device 21009	***	0.007	0.012	0.008	0.018	0.007	0.012	0.008	0.018	
11800001	device 21010	***	0.000	0.000	0.000	0.000	0.000	0.000	0.000	0.000	
11800001	device 21011	***	0.002	0.001	0.002	0.003	0.002	0.001	0.002	0.003	
11800001	device 21012	***	0.000	0.000	0.000	0.001	0.000	0.000	0.000	0.001	
11800001	device 21019	***	0.003	0.001	0.004	0.004	0.003	0.001	0.004	0.004	
11800001	device 21025	***	0.305	0.058	0.208	0.214	0.302	0.058	0.208	0.214	
11800001	device 21032	***	0.025	0.000	0.000	0.000	0.025	0.000	0.000	0.000	
11800001	device 21033	***	0.034	0.000	0.000	0.000	0.033	0.000	0.000	0.000	
11800001	device 21034	***	0.002	0.000	0.000	0.000	0.002	0.000	0.000	0.000	
11800001	device 21035	***	0.005	0.000	0.000	0.000	0.005	0.000	0.000	0.000	
11800001	device 21036	***	0.038	0.000	0.000	0.000	0.038	0.000	0.000	0.000	
11800001	device 21039	***	0.000	0.000	0.000	0.000	0.000	0.000	0.000	0.000	
11800001	device 21857	***	0.054	0.001	0.000	0.001	0.053	0.001	0.000	0.001	
11800001	device 21858	***	0.000	0.000	0.000	0.000	0.000	0.000	0.000	0.000	
11800001	device 21859	***	0.000	0.000	0.000	0.000	0.000	0.000	0.000	0.000	
11800001	device 21864	***	0.003	0.000	0.000	0.000	0.002	0.000	0.000	0.000	
11800001	device 21865	***	0.008	0.000	0.000	0.000	0.008	0.000	0.000	0.000	
11800001	device 21866	***	0.000	0.000	0.000	0.000	0.000	0.000	0.000	0.000	
11800001	device 21868	***	0.000	0.000	0.000	0.000	0.000	0.000	0.000	0.000	
11800001	device 21871	***	0.000	0.000	0.000	0.000	0.000	0.000	0.000	0.000	
11800001	device 21872	***	0.000	0.000	0.000	0.000	0.000	0.000	0.000	0.000	
11800001	device 21979	***	0.000	0.000	0.000	0.000	0.000	0.000	0.000	0.000	
11800001	device 21983	***	0.000	0.000	0.000	0.000	0.000	0.000	0.000	0.000	
11800001	device 21984	***	0.000	0.000	0.000	0.000	0.000	0.000	0.000	0.000	
11800001	device 21985	***	0.000	0.000	0.000	0.000	0.000	0.000	0.000	0.000	
11800001	device 21986	***	0.000	0.000	0.000	0.000	0.000	0.000	0.000	0.000	
11800001	device 22087	***	0.000	0.000	0.000	0.000	0.000	0.000	0.000	0.000	
11800001	device 22089	***	0.000	0.000	0.000	0.000	0.000	0.000	0.000	0.000	
11800001	device 22109	***	0.000	0.000	0.000	0.000	0.000	0.000	0.000	0.000	
11800001	device 22137	***	0.013	0.000	0.000	0.000	0.013	0.000	0.000	0.000	
11800001	device 22138	***	0.005	0.000	0.000	0.000	0.005	0.000	0.000	0.000	
11800001	device 22405	***	0.009	0.000	0.000	0.000	0.009	0.000	0.000	0.000	
11800001	device 22784	***	0.000	0.000	0.000	0.000	0.000	0.000	0.000	0.000	
11800001	device 23512	***	0.000	0.000	0.000	0.000	0.000	0.000	0.000	0.000	
11800001	device 23513	***	0.000	0.000	0.000	0.000	0.000	0.000	0.000	0.000	
11800001	device 23948	***	0.000	0.000	0.000	0.000	0.000	0.000	0.000	0.000	
11800001	device 24694	***	0.000	***	***	***	***	***	***	***	
11800001	device 29462	***	0.013	0.000	0.000	0.000	0.013	0.000	0.000	0.000	
11800001	device 29463	***	0.000	0.000	0.000	0.000	0.000	0.000	0.000	0.000	
11800001	device 29464	***	0.005	0.000	0.000	0.000	0.005	0.000	0.000	0.000	
11800001	device 29465	***	0.003	0.000	0.000	0.000	0.003	0.000	0.000	0.000	
11800001	device 29466	***	0.009	0.000	0.000	0.000	0.009	0.000	0.000	0.000	
11800001	device 29467	***	0.002	0.000	0.000	0.000	0.002	0.000	0.000	0.000	
11800001	device 29469	***	0.000	0.000	0.000	0.000	0.000	0.000	0.000	0.000	
11800001	device 29470	***	0.009	0.000	0.000	0.000	0.009	0.000	0.000	0.000	
11800001	device 29472	***	0.005	0.000	0.000	0.000	0.005	0.000	0.000	0.000	
11800001	device 29929	***	0.008	0.000	0.000	0.000	0.008	0.000	0.000	0.000	
11800001	device 30961	***	0.021	0.000	0.000	0.000	0.020	0.000	0.000	0.000	
11800001	device 30965	***	0.012	0.000	0.000	0.000	0.012	0.000	0.000	0.000	

11800001	device 30972	***	0.000	0.000	0.000	0.000	0.000	0.000	0.000	0.000
11800001	device 30976	***	0.000	0.000	0.000	0.000	0.000	0.000	0.000	0.000
11800001	device 30984	***	0.051	0.000	0.000	0.000	0.050	0.000	0.000	0.000
11800001	device 30988	***	0.101	0.001	0.001	0.001	0.070	0.001	0.001	0.001
11800001	device 30990	***	0.013	0.000	0.000	0.000	0.012	0.000	0.000	0.000
11800001	device 30995	***	0.007	0.000	0.000	0.000	0.007	0.000	0.000	0.000
11800001	device 30996	***	0.000	0.000	0.000	0.000	0.000	0.000	0.000	0.000
11800001	device 30998	***	0.095	0.000	0.001	0.001	0.094	0.000	0.001	0.001
11800001	device 30999	***	0.065	0.000	0.000	0.000	0.064	0.000	0.000	0.000
11800001	device 31000	***	0.006	0.000	0.000	0.000	0.005	0.000	0.000	0.000
11800001	device 31001	***	0.000	0.000	0.000	0.000	0.000	0.000	0.000	0.000
11800001	device 31002	***	0.000	0.000	0.000	0.000	0.000	0.000	0.000	0.000
11800001	device 31003	***	0.000	0.000	0.000	0.000	0.000	0.000	0.000	0.000
11800001	device 31004	***	0.000	0.000	0.000	0.000	0.000	0.000	0.000	0.000
11800001	device 31005	***	0.000	0.000	0.000	0.000	0.000	0.000	0.000	0.000
11800001	device 31006	***	0.000	0.000	0.000	0.000	0.000	0.000	0.000	0.000
11800001	device 31013	***	0.000	0.000	0.000	0.001	0.000	0.000	0.000	0.001
11800001	device 31014	***	0.001	0.000	0.001	0.001	0.001	0.000	0.001	0.001
11800001	device 31015	***	0.000	0.000	0.000	0.000	0.000	0.000	0.000	0.000
11800001	device 31016	***	0.000	0.000	0.000	0.000	0.000	0.000	0.000	0.000
11800001	device 31017	***	0.000	0.000	0.000	0.000	0.000	0.000	0.000	0.000
11800001	device 31018	***	0.001	0.000	0.001	0.001	0.001	0.000	0.001	0.001
11800001	device 31020	***	0.001	0.000	0.002	0.002	0.001	0.000	0.001	0.001
11800001	device 31021	***	0.002	0.000	0.002	0.002	0.001	0.000	0.002	0.002
11800001	device 31023	***	0.092	0.000	0.001	0.001	0.091	0.000	0.001	0.001
11800001	device 31024	***	0.135	0.001	0.001	0.001	0.093	0.000	0.001	0.001
11800001	device 31026	***	0.042	0.000	0.000	0.000	0.041	0.000	0.000	0.000
11800001	device 31027	***	0.019	0.000	0.000	0.000	0.017	0.000	0.000	0.000
11800001	device 31028	***	0.000	0.000	0.000	0.000	0.000	0.000	0.000	0.000
11800001	device 31029	***	0.000	0.000	0.000	0.000	0.000	0.000	0.000	0.000
11800001	device 31037	***	0.016	0.000	0.000	0.000	0.016	0.000	0.000	0.000
11800001	device 31041	***	0.002	0.000	0.000	0.000	0.002	0.000	0.000	0.000
11800001	device 31042	***	0.002	0.000	0.000	0.000	0.002	0.000	0.000	0.000
11800001	device 31044	***	0.000	0.000	0.000	0.000	0.000	0.000	0.000	0.000
11800001	device 31333	***	0.000	0.000	0.000	0.000	0.000	0.000	0.000	0.000
11800001	device 31334	***	0.000	0.000	0.000	0.000	0.000	0.000	0.000	0.000
11800001	device 31335	***	0.000	0.000	0.000	0.000	0.000	0.000	0.000	0.000
11800001	device 31336	***	0.000	0.000	0.000	0.000	0.000	0.000	0.000	0.000
11800001	device 31337	***	0.000	0.000	0.000	0.000	0.000	0.000	0.000	0.000
11800001	device 31338	***	0.000	0.000	0.000	0.000	0.000	0.000	0.000	0.000
11800001	device 31339	***	0.000	0.000	0.000	0.000	0.000	0.000	0.000	0.000
11800001	device 31340	***	0.020	0.000	0.000	0.000	0.018	0.000	0.000	0.000
11800001	device 31342	***	0.001	0.000	0.000	0.000	0.001	0.000	0.000	0.000
11800001	device 31343	***	0.000	0.000	0.000	0.000	0.000	0.000	0.000	0.000
11800001	device 31462	***	0.000	0.000	0.000	0.000	0.000	0.000	0.000	0.000
11800001	device 31463	***	0.009	0.000	0.000	0.000	0.009	0.000	0.000	0.000
11800001	device 31464	***	0.003	0.000	0.000	0.000	0.003	0.000	0.000	0.000
11800001	device 31465	***	0.000	0.000	0.000	0.000	0.000	0.000	0.000	0.000
11800001	device 31466	***	0.000	0.000	0.000	0.000	0.000	0.000	0.000	0.000
11800001	device 31467	***	0.000	0.000	0.000	0.000	0.000	0.000	0.000	0.000
11800001	device 31469	***	0.026	0.000	0.000	0.000	0.026	0.000	0.000	0.000
11800001	device 31471	***	0.002	0.000	0.000	0.000	0.002	0.000	0.000	0.000
11800001	device 31808	***	0.082	0.001	0.001	0.001	0.081	0.001	0.001	0.001
11800001	device 31809	***	0.082	0.001	0.001	0.001	0.073	0.001	0.001	0.001
11800001	device 31870	***	0.011	0.000	0.000	0.000	0.011	0.000	0.000	0.000
11800001	device 32101	***	0.000	0.000	0.000	0.000	0.000	0.000	0.000	0.000
11800001	device 32111	***	0.001	0.000	0.000	0.000	0.001	0.000	0.000	0.000
11800001	device 32229	***	0.002	0.000	0.000	0.000	0.002	0.000	0.000	0.000
11800001	device 32406	***	0.030	0.000	0.000	0.000	0.030	0.000	0.000	0.000
11800001	device 32782	***	0.152	0.001	0.001	0.001	0.150	0.001	0.001	0.001
11800001	device 32785	***	0.000	0.000	0.000	0.000	0.000	0.000	0.000	0.000
11800001	device 33209	***	0.000	0.000	0.000	0.000	0.000	0.000	0.000	0.000
11800001	device 33236	***	0.001	0.000	0.000	0.000	0.001	0.000	0.000	0.000
11800001	device 33949	***	0.000	0.000	0.000	0.000	0.000	0.000	0.000	0.000
11800001	device 34289	***	0.000	0.000	0.000	0.000	0.000	0.000	0.000	0.000
11800001	device 34290	***	0.000	0.000	0.000	0.000	0.000	0.000	0.000	0.000

11800001	device 35164	***	0.008	0.000	0.000	0.000	0.008	0.000	0.000	0.000
11800001	device 38145	***	0.000	0.000	0.000	0.000	0.000	0.000	0.000	0.000
11800001	device 38146	***	0.000	0.000	0.000	0.000	0.000	0.000	0.000	0.000
11800001	device 38147	***	0.000	0.000	0.000	0.000	0.000	0.000	0.000	0.000
11800001	device 38148	***	0.000	0.000	0.000	0.000	0.000	0.000	0.000	0.000
11800001	device 38149	***	0.000	0.000	0.000	0.000	0.000	0.000	0.000	0.000
11800001	device 38150	***	0.000	0.000	0.000	0.000	0.000	0.000	0.000	0.000
11800001	device 38151	***	0.000	0.000	0.000	0.000	0.000	0.000	0.000	0.000
11800001	device 38483	***	0.000	0.000	0.000	0.000	0.000	0.000	0.000	0.000
11800001	device 39579	***	0.012	0.000	0.000	0.000	0.012	0.000	0.000	0.000
11800001	device 39581	***	0.000	0.000	0.000	0.000	0.000	0.000	0.000	0.000
11800001	device 39583	***	0.001	0.000	0.000	0.000	0.001	0.000	0.000	0.000
11800001	device 39584	***	0.000	0.000	0.000	0.000	0.000	0.000	0.000	0.000
11800001	device 39585	***	0.001	0.000	0.000	0.000	0.001	0.000	0.000	0.000
11800001	device 39586	***	0.000	0.000	0.000	0.000	0.000	0.000	0.000	0.000
11800001	device 39587	***	0.002	0.000	0.000	0.000	0.002	0.000	0.000	0.000
11800001	device 39656	***	0.000	0.000	0.000	0.000	0.000	0.000	0.000	0.000
11800001	device 40971	***	0.000	0.000	0.000	0.000	0.000	0.000	0.000	0.000
11800001	device 40985	***	0.001	0.000	0.000	0.000	0.001	0.000	0.000	0.000
11800001	device 40987	***	0.001	0.000	0.000	0.000	0.001	0.000	0.000	0.000
11800001	device 41030	***	0.000	0.000	0.000	0.000	0.000	0.000	0.000	0.000
11800001	device 41031	***	0.002	0.000	0.000	0.000	0.002	0.000	0.000	0.000
11800001	device 41869	***	0.000	0.000	0.000	0.000	0.000	0.000	0.000	0.000
11800001	device 42090	***	0.000	0.000	0.000	0.000	0.000	0.000	0.000	0.000
11800001	device 42091	***	0.000	0.000	0.000	0.000	0.000	0.000	0.000	0.000
11800001	device 42092	***	0.000	0.000	0.000	0.000	0.000	0.000	0.000	0.000
11800001	device 42093	***	0.004	0.000	0.000	0.000	0.004	0.000	0.000	0.000
11800001	device 42094	***	0.002	0.000	0.000	0.000	0.002	0.000	0.000	0.000
11800001	device 42095	***	0.000	0.000	0.000	0.000	0.000	0.000	0.000	0.000
11800001	device 42096	***	0.000	0.000	0.000	0.000	0.000	0.000	0.000	0.000
11800001	device 42097	***	0.000	0.000	0.000	0.000	0.000	0.000	0.000	0.000
11800001	device 42110	***	0.000	0.000	0.000	0.000	0.000	0.000	0.000	0.000
11800001	device 42139	***	0.000	0.000	0.000	0.000	0.000	0.000	0.000	0.000
11800001	device 42228	***	0.000	0.000	0.000	0.000	0.000	0.000	0.000	0.000
11800001	device 43235	***	0.000	0.000	0.000	0.000	0.000	0.000	0.000	0.000
11800001	device 44299	***	0.000	0.000	0.000	0.000	0.000	0.000	0.000	0.000
11800001	device 45181	***	0.000	***	***	***	***	***	***	***
11800001	device 57911	***	0.000	0.000	0.000	0.000	0.000	0.000	0.000	0.000
11800001	device 57913	***	0.000	0.000	0.000	0.000	0.000	0.000	0.000	0.000
11800001	device 58201	***	0.000	0.000	0.000	0.000	0.000	0.000	0.000	0.000
11800001	device 58202	***	0.014	0.000	0.000	0.000	0.014	0.000	0.000	0.000
11800001	device 58203	***	0.002	0.000	0.000	0.000	0.002	0.000	0.000	0.000
11800001	device 67349	***	0.000	0.000	0.000	0.000	0.000	0.000	0.000	0.000
11800001	device 70001	***	0.000	0.000	0.000	0.000	0.000	0.000	0.000	0.000
11800001	device 70002	***	0.000	0.000	0.000	0.000	0.000	0.000	0.000	0.000
11800001	device 70003	***	0.176	0.000	0.001	0.001	0.174	0.000	0.001	0.001
11800001	device 70004	***	0.002	0.001	0.001	0.001	0.002	0.001	0.001	0.001
11800001	device 70005	***	0.007	0.004	0.002	0.004	0.007	0.004	0.002	0.004
11800001	device 70006	***	0.000	0.000	0.000	0.000	0.000	0.000	0.000	0.000
11800001	device 70007	***	0.000	0.000	0.000	0.000	0.000	0.000	0.000	0.000
11800001	device 70008	***	0.000	0.000	0.000	0.000	0.000	0.000	0.000	0.000
11800001	device 70009	***	0.000	0.000	0.000	0.000	0.000	0.000	0.000	0.000
11800001	device 70010	***	0.000	0.000	0.000	0.000	0.000	0.000	0.000	0.000
11800001	device 70011	***	0.000	0.000	0.000	0.000	0.000	0.000	0.000	0.000
11800001	device 70012	***	0.000	0.000	0.000	0.000	0.000	0.000	0.000	0.000
11800001	device 70013	***	0.002	0.000	0.000	0.000	0.001	0.000	0.000	0.000
11800001	device 70014	***	0.000	0.000	0.000	0.000	0.000	0.000	0.000	0.000
11800001	device 70015	***	0.000	0.000	0.000	0.000	0.000	0.000	0.000	0.000
11800001	device 70016	***	0.000	0.000	0.000	0.000	0.000	0.000	0.000	0.000
11800001	device 70017	***	0.000	0.000	0.000	0.000	0.000	0.000	0.000	0.000
11800001	device 70018	***	0.000	0.000	0.000	0.000	0.000	0.000	0.000	0.000
11800001	device 70019	***	0.001	0.001	0.007	0.007	0.001	0.001	0.007	0.007
11800001	device 70020	***	0.002	0.000	0.000	0.000	0.002	0.000	0.000	0.000
11800001	device 70021	***	0.000	0.000	0.000	0.000	0.000	0.000	0.000	0.000
11800001	device 70022	***	0.010	0.010	0.012	0.019	0.010	0.010	0.012	0.019
11800001	device 70023	***	0.000	0.000	0.000	0.001	0.000	0.000	0.000	0.001

11800001	device 70024	***	0.001	0.001	0.003	0.003	0.001	0.001	0.003	0.003	
11800001	device 70025	***	0.000	0.000	0.000	0.000	0.000	0.000	0.000	0.000	
11800001	device 70026	***	0.001	0.001	0.003	0.004	0.001	0.001	0.003	0.004	
11800001	device 70027	***	0.005	0.003	0.001	0.003	0.005	0.003	0.001	0.003	
11800001	device 70028	***	0.000	0.000	0.001	0.001	0.000	0.000	0.001	0.001	
11800001	device 70029	***	0.001	0.000	0.000	0.000	0.001	0.000	0.000	0.000	
11800001	device 70030	***	0.000	0.000	0.002	0.002	0.000	0.000	0.002	0.002	
11800001	device 70031	***	0.000	0.000	0.000	0.000	0.000	0.000	0.000	0.000	
11800001	device 70032	***	0.000	0.000	0.000	0.000	0.000	0.000	0.000	0.000	
11800001	device 70033	***	0.000	0.000	0.000	0.000	0.000	0.000	0.000	0.000	
11800001	device 70034	***	0.000	0.000	0.000	0.000	0.000	0.000	0.000	0.000	
11800001	device 70035	***	0.000	0.000	0.000	0.000	0.000	0.000	0.000	0.000	
11800001	device 70036	***	0.000	0.000	0.000	0.000	0.000	0.000	0.000	0.000	
11800001	device 70037	***	0.000	0.000	0.000	0.000	0.000	0.000	0.000	0.000	
11800001	device 90000	***	0.000	0.000	0.000	0.000	0.000	0.000	0.000	0.000	
11800001	device 90001	***	0.000	0.000	0.000	0.000	0.000	0.000	0.000	0.000	
11800001	device 90002	***	0.000	0.000	0.000	0.000	0.000	0.000	0.000	0.000	
11800001	device 510297	***	0.042	0.000	0.000	0.000	0.042	0.000	0.000	0.000	
11800001	device 510971	***	0.027	0.000	0.000	0.000	0.027	0.000	0.000	0.000	
11800001	MITSUBISHI CEMEN	***	2.010	0.108	0.277	0.314	1.903	0.108	0.275	0.312	2.010