Exhibit '1'

THE PROCTER & GAMBLE MANUFACTURING CO.

Ester Dryer Vent Stream Operating Mode

Scenarios During Process Definition

- Primary Mode – Venting to APC Thermal Oxidizer
- Backup Mode – Venting to Atmosphere
- Final Stage – Blind Flange on 4" Dryer Vent Pipe

D.1 – Primary Mode – emissions control during process definition

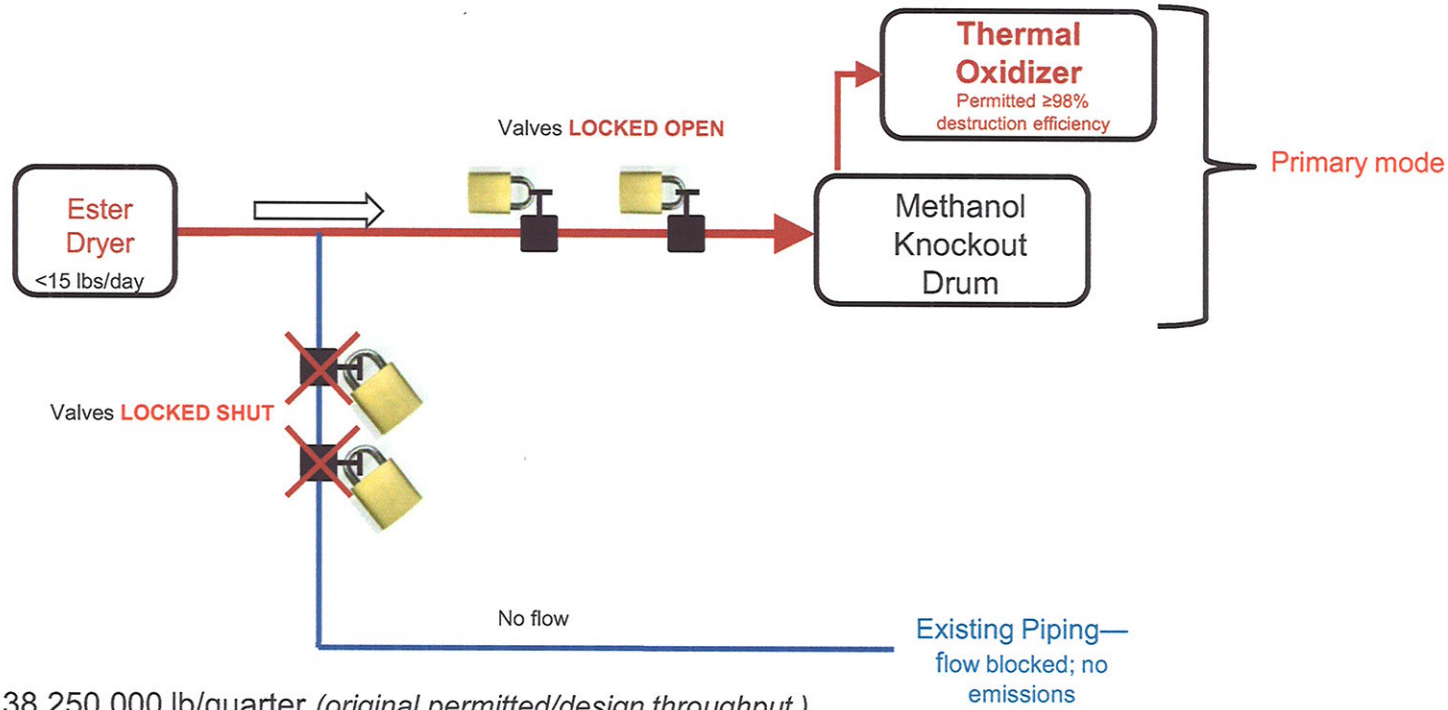

- Throughput Limit = 138,250,000 lb/quarter *(original permitted/design throughput)*
- Emission Limit Unchanged

- Modeled on MON-MACT Long Term Lockout Program 40 CFR Section 63.998(d)(1)(ii), which is currently in use in several locations in the plant.

- Flow to methanol Knockout Drum/Thermal Oxidizer is ensured by valves locked open and shut, respectively. Valves would be inspected monthly.

- **Higher throughput needed from the start to properly test configuration for long term reliability and safety**

D.2 – Backup Mode – Option exists during process definition, for unforeseen engineering difficulties.

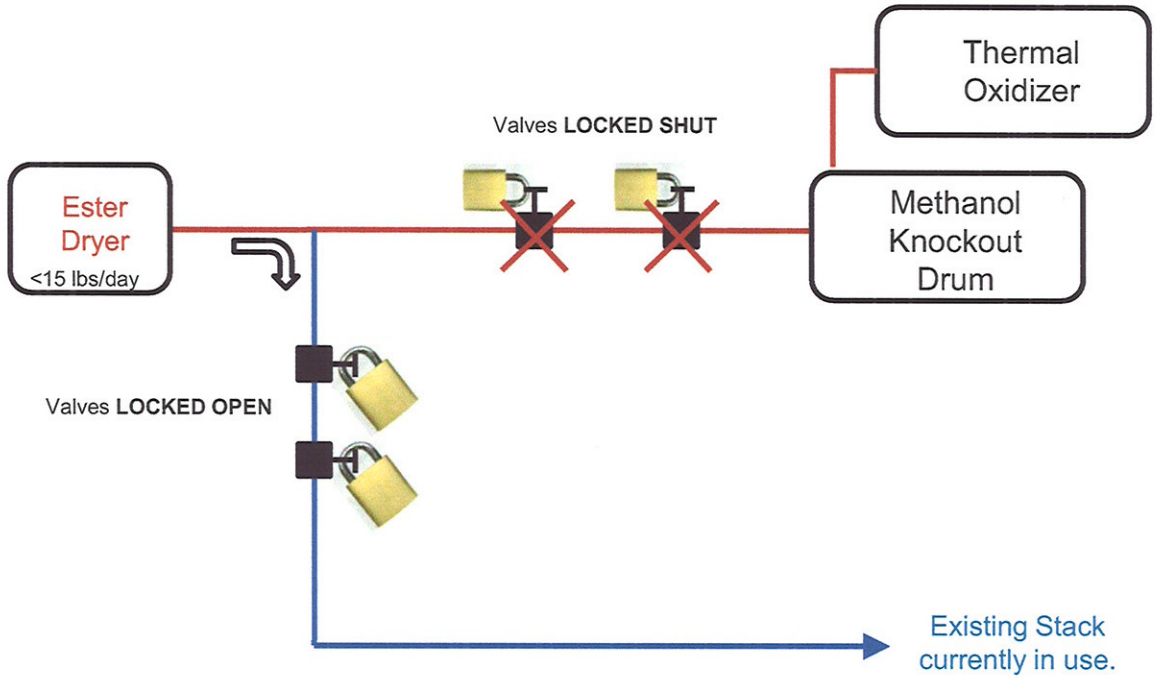

- Throughput Limit = 97,152,000 lb/quarter
- Emission Limit Unchanged

- Want to keep the option of going to atmosphere (current configuration) in case of unforeseen difficulties.

- Annual Source test completed as normally, unless process definition completed, then no source test required (because emissions are going to thermal oxidizer.)

D.3 – Final Stage After Project Success– eliminate path to atmosphere. Permanent fewer emissions!

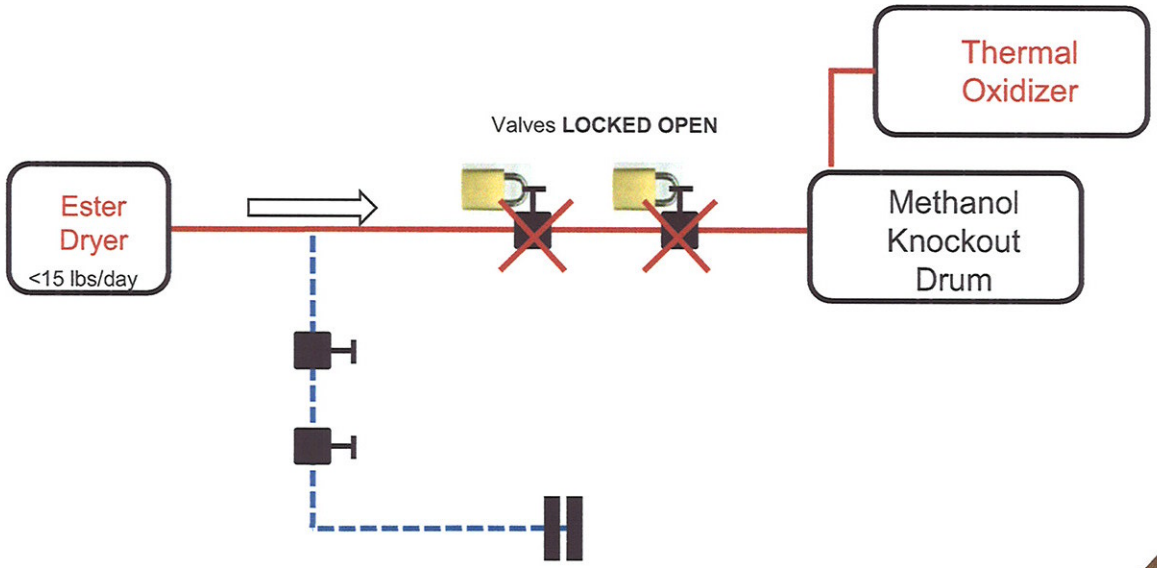

Blind Flange (installed barrier) – no flow possible

- Throughput Limit = 138,250,000 lb/quarter
- Emission Limit Unchanged
- No annual source test for ester dryer

Example of Blind Flange

After "process definition" period, at next turnaround (planned shutdown):
- Seal off outlet with bolted blind flange
- Remove locks on original path to piping