CHEVRON COKE DRUM REPLACEMENT PROJECT
A/N 527431
PERMIT TO CONSTRUCT

COMPANY NAME: Chevron Products Company
El Segundo Refinery

MAILING ADDRESS: 324 W. El Segundo Blvd.
El Segundo, CA 90245

EQUIPMENT LOCATION: 324 W. El Segundo Blvd.
El Segundo, CA 90245

PROJECT OVERVIEW:

Chevron's Delayed Coking Unit (DCU) has six coke drums that operate in three 2-drum modules. These drums, which were installed over 40 years ago, are at the end of their economic life. Chevron has increasingly had to take the drums out of service for inspection and repair of cracks. To decrease the amount of time the drums are out of operation for repairs and to improve the reliability of the DCU, Chevron proposes to replace the existing drums. The new drums, which will have the same dimensions and capacity as the existing drums, will have upgraded metallurgy with uniform shell thickness. The existing drums have a stepped shell thickness with thinner walls at the top. Chevron plans to utilize existing piping where feasible and install the new drums in the existing support structure, which will be seismically upgraded. Chevron refers to this project as the Coke Drum Replacement Project (CDRP).

Chevron also proposes to replace the V-508 Coke Condensate Drum, which is nearing the end of its life and has been subject to increased maintenance. The replacement vessel, which will also be V-508, will have the same dimensions, location and function as the existing vessel. The only proposed change to the vessel is upgrade of the metallurgy to increase the vessel's resistance to corrosion and fatigue from thermal cycling.

EQUIPMENT DESCRIPTION:

The proposed permit to construct will be issued in Section H of the Chevron's RECLAIM Facility Permit. The proposed additions and changes to the equipment descriptions and conditions are noted below with strikeouts and underlines.

Description	ID No.	Connected To	RECLAIM Source Type	Emissions and Requirements	Conditions
Process 2: Coking and Residual Conditioning					P13.1
System 1: Delayed Coking Unit					S7.5, S13.2, S15.7 S15.9, S15.10, S31.19
FRACTIONATOR, C-501A, T/T HEIGHT: 139 FT 6 IN; DIAMETER: 27 FT **A/N: 527431**	D134				
COLUMN, FRACTIONATOR SIDECUT STRIPPER, C-502A/B, STACKED, HEIGHT: 56 FT; DIAMETER: 6 FT 6 IN **A/N: 527431**	D135				
COLUMN, ABSORBER-STRIPPER, C-503, STACKED, HEIGHT: 168 FT 5 IN; DIAMETER: 11 FT 7 IN **A/N: 527431**	D137				
ABSORBER, C-504, SPONGE OIL, HEIGHT: 60 FT 6 IN; DIAMETER: 5 FT 6 IN **A/N: 527431**	D138				
VESSEL, LEAN OIL STILL, C-505, HEIGHT: 89 FT; DIAMETER: 11 FT 7 IN **A/N: 527431**	D139				
COLUMN, JET SIDECUT STRIPPER, C-510, HEIGHT: 66 FT; DIAMETER: 5 FT **A/N: 527431**	D140				
COKE DRUM, V-501A, T/T HEIGHT: 68 FT; DIAMETER: 26 FT **A/N: 527431**	D141		**Note: Vessel to be replaced.**	PM: (9) RULE 405, 2-7-1986]	D12.33, D12.34, D28.31, E336.14, K171.33
COKE DRUM, V-501B, T/T HEIGHT: 68 FT; DIAMETER: 26 FT **A/N: 527431**	D142		**Note: Vessel to be replaced.**	PM: (9) RULE 405, 2-7-1986]	D12.33, D12.34, D28.31, E336.14, K171.33
COKE DRUM, V-501C, T/T HEIGHT: 68 FT; DIAMETER: 26 FT **A/N: 527431**	D143		**Note: Vessel to be replaced.**	PM: (9) RULE 405, 2-7-1986]	D12.33, D12.34, D28.31, E336.14, K171.33
COKE DRUM, V-501D, T/T HEIGHT: 68 FT; DIAMETER: 26 FT **A/N: 527431**	D144		**Note: Vessel to be replaced.**	PM: (9) RULE 405, 2-7-1986]	D12.33, D12.34, D28.31, E336.14, K171.33
COKE DRUM, V-501E, T/T HEIGHT: 68 FT; DIAMETER: 26 FT **A/N: 527431**	D145		**Note: Vessel to be replaced.**	PM: (9) RULE 405, 2-7-1986]	D12.33, D12.34, D28.31, E336.14, K171.33
COKE DRUM, V-501F, T/T HEIGHT: 68 FT; DIAMETER: 26 FT **A/N: 527431**	D146		**Note: Vessel to be replaced.**	PM: (9) RULE 405, 2-7-1986]	D12.33, D12.34, D28.31, E336.14, K171.33
ACCUMULATOR, V-503, FRACTIONATOR OVERHEAD, WITH WATER LEG, LENGTH: 30 FT; DIAMETER: 11 FT **A/N: 527431**	D148				

Description	ID No.	Connected To	RECLAIM Source Type	Emissions and Requirements	Conditions
ACCUMULATOR, V-504A, COMPRESSOR INTERSTAGE, WITH WATER LEG, BOTTOM SECTION; T/T HEIGHT: 10 FT; DIAMETER: 9 FT 6 IN; TOP SECTION; T/T HEIGHT 5 FT., DIAMETER 4 FT 6 IN **A/N: 527431**	D149				
DRUM, V-505, ABSORBER-STRIPPER FEED, WITH WATER LEG, LENGTH: 27 FT; DIAMETER: 10 FT **A/N: 527431**	D150				
ACCUMULATOR, V-507, LEAN OIL STILL OVERHEAD, LENGTH: 12 FT; DIAMETER: 5 FT **A/N: 527431**	D151				
VESSEL, V-508, COKE CONDENSATE, LENGTH: 10 FT; DIAMETER: 5 FT **A/N: 527431**	D152		**Note: Vessel to be replaced.**		K171.33
VESSEL, TAIL GAS SEPARATOR, V-518, HEIGHT: 8 FT; DIAMETER: 4 FT 6 IN **A/N: 527431**	D153				
TANK, T-205, FEED, CHEMICAL ADDITIVE, 5700 GALS; DIAMETER: 10 FT; HEIGHT: 10 FT 2 IN **A/N: 527431**	D156				
PIT, COKE, 3 SECTIONS, INCLUDING 2 CLEAR WATER SUMPS, WIDTH: 49 FT; DEPTH: 35 FT; LENGTH: 287 FT **A/N: 527431**	D158				H23. 6
COMPRESSOR, K-501A, FRACTIONATOR OVERHEAD ACCUMULATOR OFF-GAS, TWO-STAGE, CENTRIFUGAL, WITH DRY GAS SEAL VENTED TO A FUEL GAS SYSTEM; 13,000 BHP, **A/N: 527431**	D3261				H23.47
FILTER, K-505 **A/N: 527431**	D3262				
FILTER, FRACTIONATOR PUMP AROUND STRAINERS, K-535A **A/N: 527431**	D3263				
FILTER, FRACTIONATOR PUMP AROUND STRAINERS, K-535B **A/N: 527431**	D3264				
FILTER, K-505A **A/N: 527431**	D3828				
POT, CONDENSATE, V-523, T/T, HEIGHT: 7 FT 6 IN; DIAMETER: 3 FT **A/N: 527431**	D4092				

Description	ID No.	Connected To	RECLAIM Source Type	Emissions and Requirements	Conditions
DRUM, FLASH, V-524, 15 PSI STEAM, LENGTH: 12 FT ; DIAMETER: 4 FT **A/N: 527431**	D4093				
FILTER, FUEL GAS, K-506, HEIGHT: 9 FT 1 IN; DIAMETER: 1 FT 10 IN **A/N: 527431**	D4209				
FILTER, FUEL GAS, K-506A, HEIGHT: 9 FT 1 IN; DIAMETER: 1 FT 10 IN **A/N: 527431**	D4210				
KNOCK OUT POT, V-521, T/T, HEIGHT: 3 FT 5 IN; DIAMETER: 1 FT 4 IN **A/N: 527431**	D4372				
FUGITIVE EMISSIONS, MISCELLANEOUS **A/N: 527431**	D3580			HAP: (10) [40CFR 63 Subpart CC, #5A, 5-25-2001]	H23. 19

PROCESS CONDITIONS:

P13.1 All devices under this process are subject to the applicable requirements of the following rules or regulations:

Contaminant	Rule	Rule/Subpart
Benzene	40CFR61	Subpart FF

[**40CFR 61 Subpart FF, 12-4-2003**]

[Processes subject to this condition: 1, **2**, 3, 4, 5, 6, 7, 8, 9, 10, 11, 12, 13, 14, 16]

SYSTEM CONDITIONS

S7.5 The following conditions shall apply to all refinery operation and related devices from this system:

The operator shall comply with all applicable mitigation measures stipulated in the "Statement of Findings, Statement of Overriding Considerations, and Mitigation Monitoring Plan" document which is part of the AQMD Certified Final Environmental Impact Report dated November ??, 2012 for this facility.

The operator shall maintain records in a manner approved by the District, to demonstrate compliance with the applicable measures stipulated in the "Statement of Findings, Statement of Overriding Considerations, and Mitigation Monitoring Plan" document.

[CA PRC CEQA, 11-23-1970]

[Systems subject to this condition: **Process 2, System 1**]

S13.2 All devices under this system are subject to the applicable requirements of the following rules or regulations:

Contaminant	Rule	Rule/Subpart
VOC	District Rule	1123

RULE 1123, 12-7-1990]

[Systems subject to this condition : Process 1, System 3, 5, 13, 17; **Process 2, System 1**, 5, 6; Process 3, System 1 , 5; Process 4, System 1, 3, 5, 7, 9, 11, 13; Process 5, System 1; Process 6, System 4; Process 7, System 2, 4, 7; Process 8, System 1, 2, 5, 7, 8, 10; Process 9, System 1, 2; Process 10, System 1 , 4; Process 12, System 2, 4, 7, 9, 10, 11, 12, 13, 16, 17, 18, 22, 26, 27, 28; Process 20, System 3, 7, 10, 11, 12, 14, 18, 19, 23; Process 21, System 13, 14, 16, 18]

S15.7 The vent gases from all affected devices of this process/system shall be vented as follows:

All emergency vent gases shall be directed to a vapor recovery system and/or flare system except Devices IDs D15, D3195, D3199, D3200 (Process 1, System 3), D106 (Process 1, System 13), D3574, D3371, D3373, D591, D595, D597, D3372, D592, D598 & D602 (Process 6, System 4) that vent to the atmosphere.

This process/system shall not be operated unless the vapor recovery system and/or flare system is in full use and has a valid permit to receive vent gases from this system.

[**RULE 1303(a)(1)-BACT, 5-10-1996; RULE 1303(b)(2)-Offset, 5-10-1996**]

[Systems subject to this condition : Process 1, System 3, 5, 13, 17; **Process 2, System 1**; Process 3, System 1, 5; Process 4, System 1, 3, 5, 7, 9, 11, 13; Process 5, System 1; Process 6, System 4; Process 7, System 4, 7; Process 8, System 1, 2, 5, 7, 8, 10; Process 9, System 1 , 2; Process 10, System 1; Process 12, System 2, 7, 9, 11, 13, 17, 22, 23, 25, 26, 27; Process 20, System 18, 19; Process 21, System 18]

S15.9 The vent gases from all affected devices of this process/system shall be vented as follows:

All sour gases shall be directed to the sour gas treating unit(s).

This process/system shall not be operated unless the sour gas treating unit(s) is in full use and has a valid permit to receive vent gases from this system.

[**RULE 1303(a)(1)-BACT, 5-10-1996; RULE 1303(b)(2)-Offset, 5-10-1996**]

[Systems subject to this condition : Process 1, System 3, 5, 13; **Process 2, System 1**; Process 3, System 1; Process 4, System 1, 3, 7, 9, 11, 13; Process 7, System 4; Process 8, System 1; Process 10, System 1; Process 12, System 7; Process 20, System 4, 10, 28, 29, 30, 37]

S15.10 The vent gases from all affected devices of this process/system shall be vented as follows:

All vent gases under normal operating conditions shall be directed to the vapor recovery system.

This process/system shall not be operated unless the vapor recovery system(s) is in full use and has a valid permit to receive vent gases from this system.

[**RULE 1303(a)(1)-BACT, 5-10-1996; RULE 1303(b)(2)-Offset, 5-10-1996**]

[Systems subject to this condition : Process 1, System 3, 5, 13, 17; **Process 2, System 1**; Process 3, System 1 , 5; Process 4, System 1, 3, 5, 7, 9, 1 , 13; Process 5, System 1; Process 6, System 4; Process 7, System 4 , 7; Process 8, System 1, 2, 5, 7, 8, 10; Process 9, System 1 , 2; Process 10, System 1; Process 12, System 2, 7, 9, 11, 13, 17, 22, 23, 25, 26, 27; Process 20, System 18; Process 21, System 18]

S31.19 The following BACT requirements shall apply to VOC service fugitive components associated with the devices that are covered by application number(s) 448244 and 458897:

All sampling connections shall be closed-purge, closed loop, or closed-vent systems.

All new valves in VOC service shall be leakless type, except those specifically exempted by Rule 1173 or approved by the District in the following applications: heavy liquid service, control valves, instrument piping/tubing, applications requiring torsional valve stem motion, applications where valve failure could pose safety hazard (e.g., drain valves with valve stems in horizontal position), retrofits/special applications with space limitations, and valves not commercially available.

For the purpose of this condition, leakless valve shall be defined as any valve equipped with sealed bellows or equivalent approved in writing by the District prior to installation.

All new components in VOC service as defined by Rule 1173, except valves and flanges shall be inspected quarterly using EPA Reference Method 21. All new valves and flanges in VOC service except those specifically exempted by Rule 1173 shall be inspected monthly using EPA Method 21. Components shall be defined as any valve, flange, fitting, pump, compressor, pressure relief device, diaphragm, hatch, sight-glass, and meter, which are not exempted by Rule 1173.

The following leaks shall be repaired within 7 calendar days -- all light liquid/gas/vapor components leaking at a rate of 500 to 10,000 ppm, heavy liquid components leaking at a rate of 100 to 500 ppm and greater than 3 drops/minute, unless otherwise extended as allowed under Rule 1173.

The following leaks shall be repaired within 2 calendar days -- any leak between 10,000 to 25,000 ppm, any atmospheric PRD leaking at a rate of 200 to 25,000 ppm, unless otherwise extended as allowed under Rule 1173.

The following leaks shall be repaired within 1 calendar day -- any leak greater than 25,000 ppm, heavy liquid leak greater than 500 ppm, or light liquid leak greater than 3 drops per minute.

If 98.0 percent or greater of the new valve and the new flange population inspected is found to leak gaseous or liquid volatile organic compounds at a rate less than 500 ppmv for two consecutive months, then the operator may revert to a quarterly inspection program with the approval of the Executive Officer. This condition shall not apply to leakless valves.

The operator shall revert from quarterly to monthly inspection program if less than 98.0 percent of the new valves and the new flange population inspected are found to leak gaseous or liquid volatile organic compounds at a rate less than 500 ppmv. This condition shall not apply to leakless valves.

The operator shall keep records of the monthly inspection (quarterly where applicable), subsequent repair, and reinspection, in a manner approved by the District.

The operator shall provide to the District, prior to initial startup, a list of all non-leakless type valves that were installed. The list shall include the tag numbers for the valves and reasons why leakless valves were not used. The operator shall not startup the equipment prior to the Districts approval for the use of all non-leakless valves.

The operator shall provide to the District, no later than 90 days after initial startup, a recalculation of the fugitive emissions based on actual components installed and removed from service. The operator shall also submit a complete, as built, piping and instrumentation diagram(s) and copies of requisition data sheets or field inspection surveys for all non-leakless type valves with a listing of tag numbers and reasons why leakless valves were not used.

[**RULE 1303(a)(1)-BACT, 5-10-1996; RULE 1303(b)(2)-Offset, 5-10-1996**]

[Systems subject to this condition: **Process 2, System 1**, 5]

DEVICE CONDITIONS

D12.33 The operator shall install and maintain a(n) pressure sensing device to accurately indicate the pressure in the coke drum.

The operator shall also install and maintain a device to continuously record the parameter being measured. The pressure shall be recorded to a sensitivity level of 0.1 psig.

The range of the measuring device or gauge shall not be greater than zero (0) to fifty (50) psig.

The measuring device or gauge shall be accurate to within plus or minus 5 percent for the sub-range of zero (0) to five (5) psig. It shall be calibrated once every year. When a calibration produces a percentage accuracy of greater than plus or minus 5%, the measuring device shall be calibrated every operating calendar quarter until a subsequent calibration which shows a percentage accuracy of less than plus or minus 5% is achieved.

For the purpose of this condition, continuously record shall be defined as recording the two-minute average pressure at least once every minute during each time period when gas is being released from the coke drum to the Coker Blowdown System (Process 2, System 5) or to the atmosphere, prior to removal of coke from the coke drum.

[**RULE 1303(a)(1)-BACT, 5-10-1996; RULE 1303(b)(2)-Offset, 5-10-1996**]

[Devices subject to this condition: D141, D142, D143, D144, D145, D146]

D12.34 The operator shall install and maintain a(n) sensor to accurately indicate the open or closed position of the valve.

For the purpose of this condition, the "valve" shall be defined as the valve on the atmospheric vent stack for the coke drum.

For the purpose of this condition, the "sensor" shall be defined as a position indicator that sends a signal to the data acquisition system when the valve is in the closed position.

The operator shall also install and maintain a device to continuously record the parameter being measured.

For the purpose of this condition, continuously record shall be defined as recording at least once every minute during each time period when gas is being released from the coke drum to the Coker Blowdown System (Process 2, System 5) or to the atmosphere, prior to removal of coke from the coke drum.

[**RULE 1303(a)(1)-BACT, 5-10-1996; RULE 1303(b)(2)-Offset, 5-10-1996**]

[Devices subject to this condition: D141, D142, D143, D144, D145, D146]

D28.31 The operator shall conduct source test(s) in accordance with the following specifications:

The test shall be conducted every three years following the initial source test.

The test shall be conducted when the coke level in the drum is between 25 and 34 feet of outage (empty space above the coke).

The test shall be conducted to determine the concentration and mass emission of CO, VOC, Solid PM, Total PM, total PM10 and TRS during the venting of the coke drum to the atmosphere during the drum depressurization step of the decoking process, prior to removal of coke from the drum.

The District shall be notified of the date and time of the test at least 10 days prior to the test.

The test shall be conducted after District approval of a source test protocol submitted in accordance with Section E - Administrative Conditions.

[**RULE 407, 4-2-1982**; **RULE 1303(a)(1)-BACT, 5-10-1996; RULE 1303(b)(2)-Offset, 5-10-1996**]

[Devices subject to this condition: D141, D142, D143, D144, D145, D146]

E336.14 The operator shall vent the vent gases from this equipment as follows:

All blowdown gases from this coke drum shall be directed to the Coker Blowdown System (Process 2, System 5) if the pressure inside the coke drum is greater than or equal to 2 psig.

The operator shall utilize the two-minute average coke drum pressure data recorded according to condition D12.33 to demonstrate compliance with this condition.

This equipment shall not be operated unless the Coker Blowdown System (Process 2, System 5) is in full use and has a valid permit to receive vent gases from this equipment.

[**RULE 1303(a)(1)-BACT, 5-10-1996; RULE 1303(b)(2)-Offset, 5-10-1996**]

[Devices subject to this condition: D141, D142, D143, D144, D145, D146]

H23.6 This equipment is subject to the applicable requirements of the following rules or regulations:

Contaminant	Rule	Rule/Subpart
PM	District Rule	1158

[Rule 1158, 7-11-2008]

[Devices subject to this condition: **D158]**

H23.19 This equipment is subject to the applicable requirements of the following rules or regulations:

Contaminant	Rule	Rule/Subpart
VOC	District Rule	1173
VOC	40CFR60, Subpart	GGG

[Rule 1173, 5-13-1994; Rule 1173, 2-6-2009**; 40CFR 60 Subpart GGG, 6-2-2008]**
[Devices subject to this condition: D196, D237, D633, D1047, D1048, D1049, D1054, D1929, D1930, D1981, D2042, D3522, D3527, D3577, D3579, **D3580**, D3581, D3583, D3585, D3613, D3622, D3634, D3637, D3638, D3639, D3675, D3679, D3686, D3726, D3803, D3921, D3969, D4085, D4107, D4302, D4303, D4304**]**

H23.47 This equipment is subject to the applicable requirements of the following rules or regulations:

Contaminant	Rule	Rule/Subpart
VOC	District Rule	1173
VOC	40CFR60, Subpart	GGGa

[Rule 1173, 5-13-1994; Rule 1173, 2-6-2009**; 40CFR 60 Subpart GGG, 6-2-2008]**
[Devices subject to this condition: **D3261**, D4205, D4206, D4208, D4211, D4212, D4213**]**

K171.33 The operator shall provide to the District the following items:

Final Drawings and/or specifications of the equipment installed/ constructed/modified shall be submitted to the District within 60 days after its construction.

A revised fugitive component count and recalculation of the total fugitive VOC emissions for the permit unit based on actual components installed and removed from service shall be submitted to the SCAQMD within 60 days after completion of construction.

[RULE 1301(b)(1), 12-7-1995]

[Devices subject to this condition: D141, D142, D143, D144, D145, D146, D152]

PERMIT HISTORY

Permit History for the Delayed Coking Unit (P2S1)

Permit to Construct		Permit to Operate		Description of Modification
No.	Issue Date	No.	Issue Date	
A49877	1969			Original construction.
A71315	3/23/72	P54378	10/23/73	Installation of a tank for storage of polysulfide solution, which is a corrosion inhibitor.
A75697		P54378	10/23/73	Permit covers the installation of the rest of the polysulfide injection system, which was installed without a permit.
C06859		na.	na.	Records not clear.
C14273		na.	na.	Records not clear.
C20072	11/16/78	na.	na.	Installed a tank and associated pumps for the injection of AFTOL 37 into the coke drums to minimize coke deposits
C25570	3/25/80	na.	na.	Installed a new HX on the fractionator sidecut gasoil stripper (C-502A & B).
103023	~Jan. 1993	na.	na.	Installed a new finfan section to the Fractionator overhead condenser and new pumps and HXs. Allowed increase in Residuum Feed Rate of 6000 bbl/day. ROG = +2 lb/day
114211		M46264	10/08/85	
132346		M49898	6/01/86	Added the Jet Side Stripper (C-510) and associated equipment.
157030	1987	na.	na.	Added sponge oil coolers, gas oil product filters, a pump, and a strainer. ROG = +7.3 lb/day
171622	09/06/88	na.	na.	Added a fuel gas filter and two sludge injection pumps. ROG = +5.4 lb/day
180493	4/11/89	D38519	5/21/91	Added an oil/water separation vessel (V572) to remove water from the coker feed. Also added recovered oil and sour water pumps. ROG = +6.3 lb/day

Permit to Construct		Permit to Operate		Description of Modification
No.	Issue Date	No.	Issue Date	
257502		R-D62082	1/4/93	Install larger motors on two pumps. No change in emissions
337210	6/18/98	na.	na.	Replaced the existing Absorber-Stripper Column C-503 (D137) to increase propane recovery and reduce sulfur content in the refinery fuel gas. ROG = +0.48 lb/day.
393028	na.	na.	na.	Admin application submitted to make corrections to equipment descriptions for the coke drums. The application was cancelled with the understanding that the requested changes would be evaluated upon issuance of a PO under AN 337210. The drums are being modified under AN 448244.
402249	na.	F53241	6/28/02	Admin Appl: Remove Tank T-520 (D154) since the tank was removed from service. Add an existing filter to the permit.
448244	8/24/06	na.	na.	Coker modified as part of Chevron Heavy Crude Project to modify the front end of the refinery to handle a greater load of heavy crude oils. Reduced coke drum cycle times by 25% and modified/replaced equipment in the DCU and Coker Blowdown System to debottleneck the DCU for processing additional vacuum resid from the crude units. Capacity increase from 60k bbl/day to 75k bbl/day.
464819	7/10/07	na.	na.	Reroute of pressure relief valve (PRV) vent lines from the Coker Blowdown System (P2S5) to the Refinery Blowdown Gas Recovery System (P20S10). Also added two existing fuel gas filters (K-506 and K-506A) to the permit. These filters had been inadvertently left out of the permit. .
388733	4/6/11	G20665	9/25/12	Administrative application for addition of existing KO Pot V-521 to the permit. This ko pot, which was included in original C&C permits was inadvertently left out of the facility permit.
527431	na.	na.	na.	Current permit to construct application for replacement of the six coke drums (D141 – D146) and the V-508 Coke Condensate Drum (D152), with no change in vessel dimensions or capacity.

COMPLIANCE RECORD REVIEW

There are no ongoing violations for any of the equipment affected by this project.

PROCESS DESCRIPTION:

General: An overview diagram of the Delayed Coking Unit is shown on the next page. In this unit, the vacuum resid (1050F+ boiling range) from the No.2 and No.4 crude unit vacuum towers are thermally cracked to maximize the production of lighter products. The thermal cracking occurs in a batch process in large vessels called coke drums. The batch process in the coke drums includes a coking cycle and a decoking cycle. The DCU has 6 coke drums which operate in pairs. While one of the drums is in a coking cycle, the paired drum is in a decoking cycle.

The vacuum residuum feed (~400°F) is first routed to the bottom of the main fractionator (C-501A; D134), which serves as a feed surge drum to remove fluctuations in feed rate. From the main fractionator, the feed is pumped to the one of three coker furnaces (F-501A/B/C) where it is heated to the desired temperature level (approximately 915°F) for thermal cracking and pumped into the bottom of the coke drums. Each of the coker drum pairs are fed by one of the three coker heaters.

The light cracked materials, which are in vapor phase, are sent from each coke drum to the main fractionator (C-501A; D134) where they are separated by molecular weight and boiling point. Jet fuel boiling range material, light coker gasoil (LCGO) and heavy coker gas oil (HCGO) are drawn from different trays of the fractionator and routed to strippers [(C-510; D140) and (C-502A/B; D135)] to remove excess H2S and light hydrocarbon prior to routing to subsequent refinery units to remove sulfur. The light hydrocarbons and H2S are routed back to the main fractionator. Diesel boiling range material is drawn from the main fractionator and routed directly to the diesel processing section of the refinery without stripping. Unconverted residuum feed and coke fines that are entrained in the coke drum vapors are condensed in the fractionator bottom section where they are co-mingled with the incoming residuum feed and are recycled to the coke drums for additional thermal coking.

Vapors from the top of the main fractionator (C-501A) including the light hydrocarbons and H2S from the C-502A/B and C-510 strippers are cooled and routed to the wet gas compressor where they are partially condensed and routed to the Coker gas recovery section (C-503/C-504/C-505/C-506). The lighter components (tail gas) from the C-503 absorber/stripper (D137) including H2S and smaller hydrocarbons (≤C3) are routed through the C-504 sponge

Coker Overview

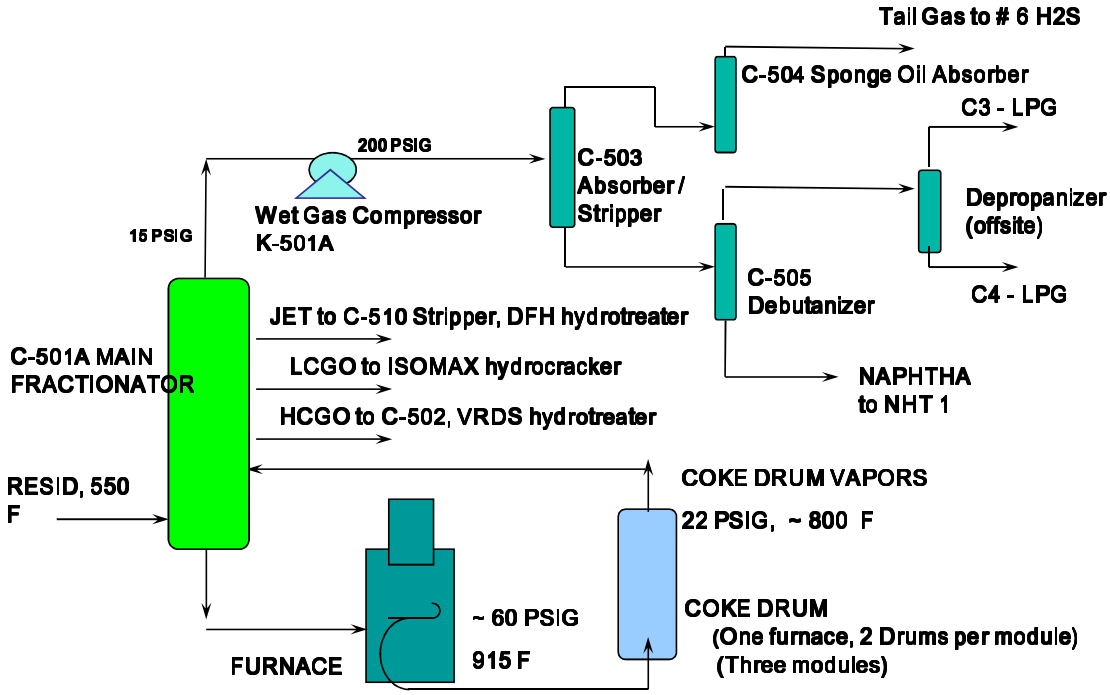

oil absorber to the No. 6 H2S Plant for recovery of most of the H2S prior to entering the refinery's fuel gas system. The heavier components from the C-503 absorber/stripper are separated into naphtha and LPG streams in the remainder of the Coker gas recovery section. The LPG and naphtha streams are subsequently routed to other refinery units for removal of sulfur.

The V-508 Coke Condensate Drum, which is not shown in the simplified drawing below, is involved in preheating of the coke drums prior to the introduction of vacuum resid feed. Preheating of a drum is accomplished by routing a portion of the vapors from its paired drum thru it as the paired drum is being fed vacuum resid. This preheating elevates the temperature of the drum prior to introduction of hot feed and decreases the thermal shock on the drum. Vapors are routed from the drum that is being preheated thru the V-508 Coke Condensate Drum to the main fractionator C-501A (D134). Water and coke fines, which could upset and damage the main fractionator, drop out in V-508. The water and fines are pumped to V-509 Coker Blowdown System Knockout Pot (D193).

Coking/Decoking Cycles: The heated vacuum residuum is pumped into the bottom of the coke drums during the coking cycle. Heavy unconverted hydrocarbons condense and precipitate to the bottom of the coke drum to form petroleum coke. The coke drums continually fill from the bottom for the entire coking cycle. As the coke begins to solidify, the fresh feed pumped into the drum flows through channels that form in the coke. The fresh feed continually flows to top of the formed coke. This liquid front of fresh feed moves up the drum for the entire coking cycle. The coker feed is switched to the paired coke drum at the end of the cycle. During the entire coking cycle, the cracked light product rises to the top of the vessel and flows to the main fractionator & distillation sections.

Once the coking cycle is complete, a coke drum must be decoked. The decoking process includes the following steps: Steam strip, Quenching, Depressurizing, Deheading, Draining, Coke Cutting, Rehead, Steam Purging and Preheating. The length of the decoking cycle is approximately the same length as the coking cycle.

During the steam strip, a coke drum is purged with steam to remove any residual hydrocarbon liquids and vapors. The steam/hydrocarbon mixture exits the top of the coke drum. In the beginning of the steaming process, the steam/ hydrocarbon mixture is sent to the fractionator. Later in the steaming step, the steam/hydrocarbon mixture is sent to the Coker Blowdown System. At the end of the steaming step, the steam flow into the bottom of the coke drum is slowly replaced with water. The coke drum is completely filled with water to cool down the coke. Steam that is formed during this quench step is sent to the Coker Blowdown System. The pressure of a coke drum at the end of the quench step is approximately 30 psig. This pressure must be relieved before the water can be drained from a coke drum. As required by permit condition E336.4, the steam/ residual hydrocarbon vent stream is sent to the Coker Blowdown System until the drum pressure drops below 2 psig. The drum is vented to the atmosphere after the pressure drops below 2 psig.

Proposed Modifications: As discussed in the Project Overview section of this evaluation, all six coke drums and the V-508 Coke Condensate Drum are being replaced with vessels of the same dimensions and capacity. The metallurgy of all of the vessels will be upgraded. As noted previously, the new drums will be constructed with a uniform shell thickness versus the stepped shell thickness with thinner walls at the top for the existing drums. Chevron plans to

utilize existing piping where feasible and install the new drums in the existing support structure, which will be seismically upgraded.

The drums will be fabricated overseas and each drum shipped in one piece to the Port of Long Beach/Port of Los Angeles, transported by barge to Kings Harbor, and transported by truck over local roads at night to the refinery. Installation of the drums will be accomplished by removal of the six derrick structure in one piece from the existing drums, setting it nearby at grade, and replacing the drums one by one onto the existing support structure. Existing piping and electrical and control wiring will be removed prior to removal of the six derrick structure. Once the new drums are installed, the derrick structure will be reset atop the drums and the piping, wiring and controls reinstalled. The old drums will be dismantled onsite and transported by truck for metal recycling.

The only impact from replacement of the coke drums on current DCU operation will be an expected reduction in annual coke drum downtime for inspection, maintenance and repairs. This reduction in drum downtime will potentially increase actual annual DCU throughput by increasing the number of annual coke drum cycles. Replacement of the V-508 Coke Condensate Drum is also expected to reduce its downtime for maintenance and repairs. However, this reduction in downtime is not expected to impact annual DCU throughput since the coke drums are currently preheated with steam when the V-508 is out of operation. Use of vapors from the paired coke drum is the preferred method of coke drum preheating since a drum can be preheated to higher temperatures with drum vapors rather than with steam.

CALCULATIONS

Changes in criteria air pollutant (CO, NOx, PM10, PM2.5, SO2, and VOC) and Greenhouse Gas (GHG) emissions must be estimated to evaluate compliance with various rules or regulations including: Rule 212, Rule 1303, Rule 1325, Rule 1703 and Rule 1714. The following table contains a summary of the emission estimate requirements for each rule/regulation and each criteria pollutant. Emission estimates are not required for RECLAIM new source review (NSR) under Rule 2005 since the DCU does not emit significant amounts of NOx or SOx.

Summary of Criteria Air Pollutant and Greenhouse Gas Emission Estimate Requirements

Rule Requirement	Estimate Required	Criteria Pollutant						
		CO	$PM_{2.5}$	PM_{10}	VOC	NOx	SO2	GHG
Rule 212 – Public Notice	30-day avg. (1)	√		√	√	√	√	
Rule 1303 - NSR	30-day avg. (1)	(4)		√	√			
Rule 1325 – PM2.5 NSR	Annual (2)		√			√	√	
Rule 1703 - PSD	Annual (3)	√				√	√	
Rule 1714 – PSD for GHGs	Annual (2)							√
Rule 3005 – TV Revision Type	30-day avg. (1)	√		√	√	√	√	

(1) Requires estimate of change in maximum potential emissions for Delayed Coking Unit only.
(2) Emission estimation methodology includes estimate of emission changes for the DCU as well as some unmodified upstream and downstream emission units.

(3) Emission estimation methodology includes estimate of emission changes for the DCU only.
(4) CO is only subject to BACT requirements.

Estimate of 30-Day Average Emissions

As summarized in the table above, determination of the increase in maximum potential emissions of certain Criteria Air Pollutant emissions on a 30-day average basis for the DCU only is required for evaluation of Rule 1303 (New Source Review), Rule 212 (Public Notice) and Rule 3005 (Title V Permit Revisions). The DCU has previously been subject to Regulation XIII (NSR) so the emission increase is determined per Rule 1306(d) as post-modification maximum potential-to-emit (PTE) minus pre-modification maximum PTE. There is no change in the maximum potential emissions from the DCU since the coke drums will be replaced with coke drums of the same capacity. The following emission estimates are of the pre- and post-modification maximum potential emissions on a 30-day average basis.

Fugitive VOC Emissions - The DCU contains fugitive components (valves, pumps, flanges, connectors, etc.) that handle gases or liquids that may periodically leak VOC containing gas or liquid to the atmosphere. VOC emissions for these fugitive components are estimated by multiplying the total number of each fugitive component type by an emission factor for that component type. The fugitive emission factors are based on the correlation equations from the following document: *California Implementation Guidelines for Estimating Mass Emissions of Fugitive Hydrocarbon Leaks at Petroleum Facilities* (CARB/CAPCOA - 1999). As seen in the detail fugitive component count and estimate contained in Appendix A, the fugitive emissions from the DCU are estimated to be 325.4 lb/day. The CDRP will not impact this estimate since Chevron is not proposing to install any additional fugitive components.

Coke Drum Depressurization Emissions - Source tests of each of the six drums were performed on April 3, 2008 and March 22, 2011. These source tests were performed according to source test condition D28.31, which was imposed on the permit to construct for modification of the DCU under Chevron's Heavy Crude Project. The measured emissions of CO, Solid PM, condensable organics, and gaseous VOC for each source test are summarized in the following table.

Summary of Coke Drum Source Test Results
Measured Average Emissions for One Coke Drum Cycle

Test Date	CO (lb/vent)	Solid PM (lb/vent)	Condensable (lb/vent)	Total PM (1) (lb/vent)	Gaseous VOC (lb/vent))
4/03/08 (2)	0.10	0.07	0.16	0.23	8.5
3/22/11 (2)	0.003	0.01	0.03	0.04	0.3
Average (3)	0.05	0.04	0.09	0.13	4.4

(1) Total PM includes the condensable organic fraction.
(2) Average emissions for source test of each of the six coke drums.
(3) Average of 2008 and 2011 source test results. Basis for emission estimates.

As seen in the table, measured mass emissions of each of the pollutants were significantly lower for the 2011 source test than the 2008 test. The average atmospheric vent duration during the 2008 and 2011 tests was 35 minutes and 3 minutes, respectively. Atmospheric vent times during the 2008 tests varied from 5 minutes to 62 minutes. Following the 2008 source tests, Chevron evaluated drum quenching/cooling procedures to determine the reason for this variability. Standard operating procedures (SOPs) were developed based on best operating practices. A critical improvement was optimization of the quench water addition rate including slower water addition at the beginning of the cooling/quenching cycle and ramping of the water addition rate as the cooling cycle proceeds. The SOP also includes application of back pressure to a drum after the water level rises above the top of the coke. This procedure appears to force water more uniformly into the coke to provide more complete and uniform cooling.

It is believed that the 2011 source test results are more representative of current drum vent emissions. However, as a conservative estimate of maximum potential post-construction emissions, the average of the 2008 and 2011 source test results are utilized in the post-construction emission estimates. Estimated post-construction maximum potential CO, PM and VOC emissions and the estimated reduction of CO, PM and VOC emissions based on the average of the 2008 and 2011 source test data are shown in the following tables.

Estimated Maximum Potential Coke Drum Emissions

	CO (lb)	Solid PM (lb)	Condensable (lb)	Total PM (1) (lb)	Gaseous VOC (lb)
Max. Daily (2)	0.30	0.24	0.54	0.78	26.4
30-day Avg. (3)	0.30	0.24	0.45	0.79	26.8
Max. Annual (4)	110	88	197	285	9636

(1) Total PM includes the condensable organic fraction.
(2) Based on six coke drum venting episodes per day.
(3) Based on maximum annual emissions divided by 360.
(4) Based on 2190 (365 vents/drum x 6 drums) coke drum venting episodes per year

Total VOC Emissions – The maximum potential VOC emissions for the DCU on a 30-day average basis are 352.2 lb/day including 325.4 lb/day of fugitive VOC emissions and 26.8 lb/day of coke drum vent VOC emissions.

<u>Estimate of Annual Emissions</u>

As noted above, estimation of annual emissions of CO, NOx, SOx, PM2.5 and GHG are required for evaluation of District Rule 1325 - Federal PM2.5 New Source Review Program, Rule 1703 – PSD Analysis and Rule 1714 – PSD for Greenhouse Gases. The calculations and a description of the calculation methodology for each of these rules are contained in this section.

Rule 1325 (Federal $PM_{2.5}$ NSR) – The substantive definitions and requirements of this rule have been directly incorporated from Title 40 of the Code of Federal Regulations (CFR) Part 52.21 - *Prevention of Significant Deterioration of Air Quality*. With an abundance of caution,

pertinent EPA guidance re calculation methodology for 40CFR52.21 is utilized to estimate $PM_{2.5}$, NOx and SO2 emission increases for the project. Two concepts in EPA guidance that are considered are debottlenecking and aggregation.

Debottlenecking - According to EPA guidance, the total increase in emissions that are included in determining if there will be a post-change significant emissions increase includes: (1) Increases occurring at all new or modified units, and (2) any other increases at existing emissions units not being modified that experience emissions increases as a result of the change. Therefore, the impact of the proposed coke drum replacements on emissions from upstream and downstream emission units will be evaluated.

Aggregation - EPA guidance indicates that a reviewing authority must consider projects to be a single project and must aggregate all of the emissions increases for the projects if the reviewing authority determines that a project is dependent upon another project(s) for its technical or economic viability. This guidance is not pertinent to the CDRP since it is not dependent on another project for its technical or economic viability.

As defined in Rule 1325(b)(4) [and 40CFR52.21(b)(2)(i)], a *major modification* is any physical change in or change in the method of operation of a major stationary source that could result in: a significant emissions increase of a regulated NSR pollutant <u>and</u> a significant net emissions increase of that pollutant from the major stationary source. Therefore, it must first be determined if the CDRP causes a significant increase in the emissions of $PM_{2.5}$, NOx or SO2.

According to Rule 1325(d)(2) [and 40CFR52.21(a)(2)(iv)(c)], a significant emissions increase of a regulated NSR pollutant is projected to occur for if the sum of the difference between the *projected actual emissions* and the *baseline actual emissions* for each existing emissions unit, equals or exceeds the significant amount for that pollutant. As specified in 1325(b)(13), the significance level is 10 ton/yr for $PM_{2.5}$ and 40 ton/yr for both NOx and SO2.

Baseline actual emissions are defined in Rule 1325(b)(1) [and 40CFR52.21(b)(48)(ii)] as the average rate at which the emissions unit actually emitted the pollutant during any consecutive 24-month period selected by the owner or operator within the 10-year period immediately preceding either the date the owner or operator begins actual construction of the project, or the date a complete permit application is received by the Administrator. The average rate shall include fugitive emissions to the extent quantifiable, and emissions associated with startups, shutdowns, and malfunctions. A different 24-month period can be selected for each pollutant. The replacement of the coke drums will not cause a projected increase in pollutant emissions due to startups, shutdowns, and malfunctions. Reduced maintenance requirements on individual coke drums may actually reduce the potential emissions due to startup, shutdown, and malfunction of the DCU.

Projected Actual Emissions are defined at Rule 1325(b)(10) [and 40CFR52.21(b)(41)(i)] as the maximum annual rate at which an existing emissions unit is projected to emit a regulated NSR pollutant in any one of the 5 years (12-month period) following the date the unit resumes regular operation after the project, or in any one of the 10 years following that date, if the project involves increasing the emissions unit's design capacity or its potential to emit that regulated NSR pollutant….. The owner or operator shall exclude that portion of the unit's emissions following the project that an existing unit could have accommodated during the

consecutive 24-month period used to establish the baseline actual emissions and that are also unrelated to the particular project, including any increased utilization due to product demand growth.

Based on this definition of *projected actual emissions*, the only increase in annual emissions from the DCU and impacted upstream and downstream emissions units due to the CDRP is the increase that will potentially occur from the elimination of coke drum downtime for repair of cracks in the aged drums. Since the project does not increase the capacity of the coke drums or DCU, all other potential emissions above the baseline actual emissions could have been accommodated during the baseline years and are unrelated to the CDRP.

The following methodology is utilized to determine the estimated increase in PM2.5. NOx and SO2 emissions that are projected to occur due to the elimination of coke drum down time for crack repairs. Chevron has selected 2008 and 2009 as the baseline years. The methodology below determines the PM2.5, NOx and SO2 emissions that were avoided due to coke drum downtime for repairs during 2008 and 2009. These "avoided" emissions are equal to the projected PM2.5, NOx and SO2 emission increase following replacement of the drums. For this evaluation, it is conservatively assumed that all PM is PM2.5.

1. Determine the potential increase in vacuum resid throughput from 2008 and 2009 levels for the DCU that will occur due to the elimination of coke drum outages for repairs and identify impacted emission sources in the DCU.
   a) For each of the six drums, review operational records to determine the hours of downtime during 2008 and 2009 for repair of drum cracks. Note that the paired drum is also taken out of service during the repair of one of the drums.
   b) Determine the average vacuum resid feed rate to the DCU in Mbbl/day during each period that a drum pair is out of service for repair of a crack.
   c) Determine the lost DCU processing capacity for each drum outage period by subtracting the average vacuum resid feed rate in Mbbl/day from the maximum design vacuum resid feed capacity of 75 Mbbl/day. This is a conservative methodology since the project annual average vacuum resid throughput is projected to be less than 75 Mbbl/day. A table of coke drum down time and lost feed throughput due to repair of cracks is contained in **Appendix B**.
   d) Determine the average daily reduction in feed by dividing the total reduction in feed for the two year period by 731 days. As seen in the table in **Appendix B**, the DCU lost a total of 1390 Mbbls of feed processing capacity during the 731 days of the 2008 – 2009 time period. The average daily loss in DCU feed processing capacity due to drum outages was 1.9 Mbbls during 2008-2009. Summary results of this review are contained in Appendix B. This average daily loss in DCU feed capacity is equal to the amount of vacuum resid processing capacity that will be gained in future years following replacement of the drums.
   e) Impacted emission sources in the DCU that will have a potential (projected) increase in emissions include the Coker Charge Heaters F-501A, F-501B and F-501C and coke drums (atmospheric vent).

2. Determine the potential increase in crude throughput from 2008 and 2009 levels for the No. 2 and No. 4 Crude Units that will occur due to the elimination of coke drum downtime for repairs and identify impacted emission sources in the No. 2 and No. 4 Crude Units.

   a) As discussed in the *Process Description* section of this evaluation, the DCU cracks vacuum residuum from the vacuum columns in the No. 2 and No. 4 Crude Units. The No.2 and No. 4 Crude Units are the only upstream process units that will have potential (projected) emission increases due to replacement of the coke drums. Based on a review of No. 2 and 4 Crude Unit operating records for 2008 and 2009, crude throughput was reduced by 251 Mbbl (0.344 Mbbl/day) due to coke drum downtime for repairs. Summary results of this review are contained in Appendix B. Note that the coke drum downtime had a more moderate impact on crude throughput rates to the crude units than on vacuum resid rates to the DCU because the refinery has the capacity to store vacuum resid during periods when coke drums are down and vacuum resid produced in the crude units can be blended into fuel oil, which is sold outside the District.

   b) The impacted emission sources in the crude units are the F-301B and F-201A Heaters in the No. 2 Crude Unit and the F-1110A/B and F-1160A/B heaters in the No. 4 Crude Unit.

3. Determine the potential increase in throughput from 2008 and 2009 levels for impacted process units downstream of the No. 2 and No. 4 Crude Units and the DCU that will occur due to the elimination of coke drum downtime for repairs and identify impacted emission sources in each of the downstream process units.

   a. Review refinery operations to determine which unmodified downstream process units are impacted by changes in crude feed rates to the No. 2 and No. 4 Crude Units and identify impacted emission sources in the downstream process units.

      Crude Oil is distilled in the No. 2 and No. 4 Crude Units to produce the following intermediate and final products: Overhead, Straight Run Gas Oil (SRHGO), Straight Run Heavy Gas Oil (SRGO), Diesel, Jet, Naphtha, and Vacuum Resid. As described in more detail in the table below, all of these products are treated in downstream process units to remove sulfur. Most of the downstream sulfur removal processes are hydrotreaters that consume hydrogen and produce H2S, which is converted to sulfur in the Sulfur Recovery Units (SRUs). Hydrogen is produced in the Steam Naphtha Reformer (SNR) Hydrogen Plant, which contains Reformer Heater F-1330. The emissions from production of additional hydrogen in the SNR Hydrogen Plant and processing of additional H2S in the SRUs are also evaluated.

   b. Review refinery operations to determine which unmodified downstream process units are impacted by changes in vacuum resid feed rates to the DCU and identify impacted emission sources in the downstream process units.

      Vacuum resid is cracked in the DCU to form the following products: Heavy Coker Gas Oil (HCGO), Light Coker Gas Oil (LCGO), Coker Diesel, Coker Jet, Coker Naphtha, Fuel Gas, Coker LPG and Coke. All of these products are treated in

downstream process units to remove sulfur. These downstream process units, mostly hydrotreaters, and associated emission sources are summarized in the table below.

Stream	Impacted Process Units and Associated Emission Sources
SRHGO and HCGO	SRHGO and HCGO are hydrotreated in the Vacuum Resid Desulfurizer (VRDS), which contains Heaters F-1510 and F-1520. Hydrotreated HGO is fed to the FCCU. The CDRP will not impact emissions from the FCCU since Chevron purchases hydrotreated FCC feed to replace any feed lost from the VRDS due to coker outages. Hydrogen is consumed and H2S and fuel gas are produced.
SRGO and LCGO	SRGO and LCGO are hydrotreated and hydrocracked in the Isomax Plant which contains Heaters F-510, F-520, F-530, F-540, F-610, F-620, F-720 and F-731. Most Isomax products are either finished products or are mixed directly into finished products. The exception is heavy gasoline. The heavy gasoline is sent to the Continuous Catalytic Reforming Unit (CCRU), which contains Heaters F-410, F-420, F-430 and F-440, for further processing. The CCRU produces hydrogen as a byproduct. Hydrogen produced in the CCRU from processing of additional heavy gasoline offsets some of the additional hydrogen required to hydrotreat crude unit and DCU products.
Diesel & Coker Diesel	Diesel and Coker Diesel are hydrotreated in the Vacuum Gas Oil (VGO) Desulfurizer, which contains Heaters F-1610 and F-1620. Hydrotreated diesel is sent to product blending. Hydrogen is consumed and H2S and fuel gas are produced.
Jet & Coker Jet	Jet and Coker Jet are hydrotreated in the Diesel Furnace Hydrofiner (DFH), which contains Heater F-302. Hydrotreated jet is sent to product blending. Hydrogen is consumed and H2S and fuel gas are produced.
Naphtha and Coker Naphtha	Naphtha and Coker Naphtha are hydrotreated in the Naphtha Hydrotreater No. 1 (NHT1), which contains Heaters F-4531 and F-4532. Hydrotreated Naphtha is sent to gasoline blending or the Naphtha Pre-Fractionator. Hydrogen is consumed and H2S and fuel gas are produced.
Crude Unit Overhead	Overhead from the crude units is hydrotreated in the Naphtha Hydrotreater No. 2 (NHT2), which contains Heater F-1210. Hydrogen is consumed and H2S and fuel gas are produced.
Coker LPG	Coker LPG is treated in the No. 3 Caustic Treating Plant before being fed to the Alkylation Plant. No additional emissions are generated in the CTP or Alky Unit since neither unit contains fired sources such as process heaters.
Coke	Coke is transported and loaded into trucks or rail cars by the Raw Coke Handling System.
Fuel Gas	Fuel gas produced in the DCU, VRDS, Isomax, VGO, DFH and NHT1 is utilized in refinery process heaters. Coke drum outages caused a reduction of the amount of fuel gas produced in these units. This lost refinery fuel gas production was replaced with natural gas.

Based on this evaluation, the following table shows all unmodified upstream and downstream emission sources that will potentially have an increase in PM2.5, NOx and SO2 emissions due to the elimination of coke drum outages for crack repairs.

Emissions Sources with Increases in Projected Actual Annual Emissions

Upstream Emission Sources	Downstream Emissions Sources
F-301B (No. 2 Crude Unit) F-201A (No. 2 Crude Unit) F-1110A/B (No. 4 Crude Unit) F-1160A/B (No. 4 Crude Unit) F-501A/B/C (Delayed Coking Unit) Coke Drum Vents	Raw Coke Handling F-1210 (Naphtha Hydrotreater No. 2 (NHT2)) F-4531 (Naphtha Hydrotreater No. 1 (NHT1)) F-4532 (Naphtha Hydrotreater No. 1 (NHT1)) F-302 (Diesel Furnace Hydrofiner (DFH)) F-1610 (Vacuum Gas Oil Desulfurizer (VGO)) F-1660 (Vacuum Gas Oil Desulfurizer (VGO)) F-510 (Isomax Plant – CKN Reactor) F-520 (Isomax Plant – CKN Reactor) F-530 (Isomax Plant – CKN Reactor) F-540 (Isomax Plant – CKN Reactor) F-610 (Isomax Plant – Iso Catalyst Regeneration) F-620 (Isomax Plant – Iso Catalyst Regeneration) F-720 (Isomax Plant – Isomax Hydrocracking Unit) F-731 (Isomax Plant – Isomax Hydrocracking Unit) F-1510 (Vacuum Resid Desulfurizer (VRDS)) F-1520 (Vacuum Resid Desulfurizer (VRDS)) F-410 (Continuous Catalytic Reformer (CCR)) F-420 (Continuous Catalytic Reformer (CCR)) F-430 (Continuous Catalytic Reformer (CCR)) F-440 (Continuous Catalytic Reformer (CCR)) F-1330 (Steam Naphtha Reformer (SNR)) SNR Reactor SRUs

c. Utilize operating records to determine annual throughput in Mbbls of each of the unmodified downstream process units for 2008 and 2009.

d. Utilize process knowledge and operating records for 2008 and 2009 to determine the average increase in feed to each of the downstream process units for each additional barrel of vacuum resid fed to the DCU and each additional barrel of crude fed to the No. 2 ad No. 4 Crude Units. Note that this step relied heavily on process knowledge of Chevron refinery engineers.

e. Using the result of step d above, calculate the potential (projected) annual increase in throughput for each downstream process unit based on the estimated 1.9 Mbbl/yr increase in vacuum resid throughput to the DCU and the 0.34 Mbbl/yr increase in crude throughput to the crude units. As noted in the table above, some of the downstream process units receive feed from both the DCU and crude units so the increase in feed from each are added together to get the total increase in throughput. Summary results of this review are contained in Appendix B.

4. Estimate the projected increase in annual PM2.5, NOx and SOx emissions due to the CDRP.

   a. Estimate the annual emissions of PM2.5, NOx and SO2 for each of the impacted emission sources for 2008 and 2009. Emission estimates are based on the following:
      - Annual mass NOx and SOx emissions for each heater are as measured and reported under the District's RECLAIM Regulation for 2008 and 2009.
      - Annual mass PM2.5 emissions for each heater are from Chevron's Annual Emission Reports (AERs) to the District for 2008 and 2009. The AER emission estimates are based on emission factors developed from heater specific PM10 source test data and annual fuel flow as measured for the District's RECLAIM Regulation. Assume all PM10 reported in the AER is PM2.5.
      - Annual PM2.5 for the Raw Coke Handling System is based on calculations performed under A/N 453091 using emission estimation methods for aggregate handling and storage from Section 13.2.4 of EPA's AP-42 (*Compilation of Air Pollution Emission Factors, AP-42, Fifth Edition, Volume 1: Stationary Point and Area Sources*). PM2.5 emissions are estimated to be 0.0013 lb/ton of coke transferred assuming all PM emissions are PM2.5.
      - Annual PM2.5 for the coke drum vents is based on 2008 and 2011 source test results. PM2.5 emissions are estimated to be 0.13 lb/vent assuming all PM is PM2.5.

   b. Develop throughput-based PM2.5, NOx and SO2 emission factors (lb/Mbbl feed) by dividing the annual average 2008/2009 emissions of PM2.5, NOx and SO2 of each emission source by the annual average 2008/2009 throughput for the associated process unit. Results of this calculation are contained in Appendix C.

   c. For each emission source, calculate the projected increase in PM2.5, NOx and SO2 emissions by multiplying the throughput-based PM2.5, NOx and SO2 emission factor (lb/Mbbl) times the projected increase in annual throughput (Mbbl/yr) due to the elimination of coke drum downtime for repairs. Results of this calculation are contained in Appendix C.

      As discussed previously, additional refinery fuel gas (RFG) will also be produced. This additional RFG will be fired in refinery heaters in lieu of natural gas. The NOx and PM2.5 emissions from combustion of RFG are not expected to be significantly different than from combustion of natural gas. However, SO2 emissions will be significantly higher since the annual average total reduced sulfur concentration of RFG is 30 ppmv versus 5 ppmv for natural gas. On a percentage basis, the maximum projected increase in RFG firing is conservatively estimated to be equal to the maximum potential increase in vacuum resid processed in the DCU.

      As discussed in Step 1 above, the maximum projected increase in vacuum resid processing from 2008/2009 levels is 1390 Mbbl. The total vacuum resid processed in the DCU in 2008/2009 was 45,547 Mbbls. The maximum projected increase in vacuum resid processing is 3.05% [1390 Mbbl/45,547 Mbbls]. The average annual RFG firing during 2008/2009 was 24.71 x 10^9 scf. The maximum projected increase in RFG firing is 75.37 x 10^7 scf [(24.71 x 10^9 scf)(3.05/100)]. The maximum projected increase in annual SO2 emissions is 3180 lb/yr as shown below.

$$\text{SO2 Increase} = 753{,}700{,}000\,\text{scf NG} \times \left(\frac{25\,\text{ppmvd SO2}}{1{,}000{,}000}\right) \times \left(\frac{\text{lb - mol}}{379.5\,\text{scf}}\right) \times \left(\frac{64 lbSO2}{\text{lb - mol}}\right)$$

$$= 3180 \text{ lb SO2/yr}$$

d. Sum the PM2.5, NOx and SO2 emission increases for each emission source to determine the total projected PM2.5, NOx and SO2 emission increase for the CDRP

5. Compare the total emission increase for each pollutant to the significance level specified in 1325(b)(13) to determine if the CDRP is a major modification for the pollutant.

Pollutant	Significance Level (ton/yr)	Emission Increase for CDRP (ton/yr)	Is CDRP a Major Modification?
PM2.5	10	0.9	No
NOx	40	2.9	No
SO2	40	4.5	No

As seen in the table above, the CDRP is not a major modification for PM2.5, NOx or SO2.

Rule 1703 (PSD Analysis) – CO, NOx, SOx and lead compounds must be evaluated under this rule. According to 1703(a)(2), a permit to construct shall be denied for any permit unit with a net emission increase in an attainment air pollutant unless the permit unit is constructed using BACT for that pollutant. Per District policy, BACT is required for any net emission increase that exceeds 1.0 lb per day. Other requirements are specified in 1703(a)(3) for a project (major modification) at a stationary source that causes a significant emission increase of an attainment air pollutant. According to the definition in Rule 1702(s), *significant emission increase* means any attainment air pollutant for which the net cumulative emission increase of that air pollutant is greater than the amount specified as follows: CO – 100 ton/yr, NOx – 40 ton/yr, SO2 – 40 ton/yr and lead compounds – 0.6 ton/yr.

Potential emission increases from unmodified sources upstream and downstream of the DCU are not evaluated under this regulation. NOx, SOx and lead compounds are not emitted in quantifiable amounts from the DCU so no further analysis is required for these pollutants. Post-construction emissions of CO for the DCU are calculated according to Rule 1706(c)(1)(A) from the (i) maximum rated capacity; and (ii) twenty-four hours of operation per day; and (iii) actual materials processed.

As shown previously, based on the average of the 2008 and 2011 sources tests, the coke drums emit 0.05 lbs of CO per cycle. Maximum annual emissions are 110 lb/yr (0.3 lb/day and 0.06 ton/yr) based on 6 maximum coke drum cycles per day for 365 days per year. (2190 total cycles). Since the maximum potential CO emissions for the DCU are below 1.0 lb/day and 100 tons/yr, no further analysis is required. The CDRP is not subject to any requirements under this regulation.

Rule 1714 (PSD for Greenhouse Gases) – The requirements of this rule apply to Greenhouse Gases (GHGs) "as defined by EPA to mean the air pollutant as an aggregate group of six

GHGs: carbon dioxide, nitrous oxide, methane, hydrofluorocarbons, perfluorocarbons, and sulfur hexafluoride". This rule adopts by reference 40 CFR Part 52.21- *Prevention of Significant Deterioration of Air Quality*, the federal requirements for the PSD program, and specifically exempts those sections of the federal regulation that are not applicable to GHGs.

According to §52.21(b)(49)(i) – (v), the pollutant GHG is subject to requirements under this regulation if either of the following applies:

- A stationary source, which is an existing major stationary source for a regulated non-GHG NSR pollutant, undertakes a "major modification" that subjects the source to PSD permitting requirements for a non-GHG NSR pollutant and the modification will result in an emission increase and net emission increase of at least 75,000 tpy on a CO_2e basis and 0 tpy on a mass basis.
- A stationary source, which is an existing major stationary source that emits or has the potential to emit 100,000 tpy CO_2e, undertakes a modification that will result in an emission increase and net emission increase of at least 75,000 tpy on a CO_2e basis and 0 tpy on a mass basis.

CO2 equivalent emissions (CO2e) is determined by multiplying the mass amount of emissions (tpy) for each of the six greenhouse gases by the gas's associated global warming potential (GWP). The only GHGs emitted from the sources in this evaluation are CO2, methane and N2O, which GWPs of 1, 21 and 310, respectively.

The same general methodology is utilized to estimate the increase in emissions of CO2e as described above for Rule 1325 except step 4a. CO2 emission factors developed from analysis of the carbon content of refinery fuel gas from each of the fuel mix drums in the refinery were utilized to estimate CO2 emissions for each of the subject process heaters. These emission factors were originally developed in 2009 for estimation of CO2 emissions in a 2009 report of refinery GHG emissions prepared for EPA by Chevron as specified in 40CFR98 – Mandatory Greenhouse Gas Reporting.

CO2 emissions for 2008 and 2009 were estimated by multiplying the appropriate fuel-based emission factor for a process heater by the 2008 and 2009 fuel gas usage for the heater, as measured for RECLAIM. A process throughput based CO2 emission factor was developed for each process heater by dividing the average annual 2008/2009 CO2 emissions for the heater by the annual average process throughput for the associated process unit. The maximum projected CO2 emission increase for each heater due to the reduction in coke drum downtime is estimated by multiplying the maximum projected throughput increase for the associated process unit by the throughput based CO2 emission factor for the fuel gas provided to the heater.

For these estimates, it was assumed that all additional gas combusted in each process heater, including natural gas, was refinery fuel gas from the associated fuel mix drum. This simplifying assumption is conservative since the CO2 emissions factor for each refinery fuel gas is higher than the CO2 emission factor for the natural gas supplied to the refinery. Results for these calculations are contained in Appendix D. These results also include estimates for the following streams: CO2 produced as a byproduct in the SNR Hydrogen Plant, CO2 in the acid gas fed to the SRUs and CH4 in the acid gas fed to the SRUs that is converted to CO2.

As seen in Appendix D, the maximum projected CO2 emission increase due to the CDRP is 19,996 ton/yr.

Methane and N2O emissions from the combustion sources must also be accounted for. For the 2009 EPA GHG Report, Chevron determined that CO2e (including methane and N2O) for combustion sources is equal to 1.0016 times CO2 emissions. Using this CO2e to CO2 ratio, the maximum projected increase in CO2e from combustion sources (and the SNR Hydrogen Plant and SRUs) is 20,028 ton/yr [19,996 ton/yr x 1.0016].

The coke drums do not emit significant amounts of CO2 but do emit methane that must be accounted for. Based on the average of the 2008 and 2011 source tests, the coke drums emit 1.55 lb of methane per coke drum cycle (vent). The maximum projected increase in methane emissions is 105.4 lb/yr based on an increase of 68 drum cycles (vents) per year. Using the methane GWP of 21, this is equivalent to a maximum projected CO2e increase of 2213 lb/yr [(1.55 lb methane/yr)(21 lb CO2e/lb methane)]. The total maximum projected CO2e increase is 20,029 ton/yr including the 1 ton/yr from the coke drum vents.

As seen in the table below, the maximum projected increase in CO2e is well below the significance level for this rule. Therefore, the CDRP is not a major modification under this rule.

Pollutant	Significance Level (ton/yr)	Emission Increase for CDRP (ton/yr)	Is CDRP a Major Modification?
GHG (CO2e)	75,000	20,029	No

RULE COMPLIANCE REVIEW:

California Environmental Quality Act (CEQA)

The California Environmental Quality Act (CEQA), Public Resources Code Section 21000 et seq., requires that the environmental impacts of proposed "projects" be evaluated and that feasible methods to reduce, avoid or eliminate significant adverse impacts of these projects be identified and implemented. This project qualifies as a significant project so preparation of a CEQA document is required. The South Coast Air Quality Management District is the lead agency. An Environmental Impact Report (EIR) has been prepared for the CDRP Project. The EIR review period runs from August 31, 2012 through October 16, 2012. The final Environmental Impact Report (EIR) will be certified prior to the issuance of the subject permit to construct. The permit will be issued with condition (S7.5) that specifies that Chevron shall comply with all applicable mitigation measures stipulated in the "Statement of Findings, Statement of Overriding Considerations, and Mitigation Monitoring Plan" document which is part of the AQMD Certified Final Environmental Impact Report.

Rule 212: Standards for Approving Permits

212(c)(1): Public notice is required for a project if any of the modified permit units are located within 1000 feet of a school. Public notice is not required under this clause since the DCU is located more than 2400-foot from the nearest school.

212(c)(2): Public notice is required for any "new or modified facility", which has on-site emission increases exceeding any of the daily maximums specified in subdivision (g) of Rule 212. Public notice is not required under this clause for the subject permit to construct since the replacement of the coke drums with no change in drum size or capacity does not cause an increase in the 30-day average emissions of any air pollutants from the DCU.

212(c)(3): Public notice is required for a project if any of the modified permit units have an increase in toxic air contaminants that results in an increase of maximum individual cancer risk (MICR) of more than one in a million (1×10^{-6}) during a lifetime (70 years). Replacement of the coke drums does not cause an increase in the emissions of any toxic air contaminants. Public notice is not required under this clause.

212(g): 212(g) specifies that any new or modified sources subject to Regulation XIII which undergo construction or modifications resulting in an emissions increase exceeding any of the daily maximum emission thresholds (listed in the table above) will require notification. From Regulation XIII (Rule 1302), the definition of "Source" is any permitted individual unit, piece of equipment, article, machine, process, contrivance, or combination thereof, which may emit or control an air contaminant. This includes any permit unit at any non-RECLAIM facility and any device at a RECLAIM facility.

Public notice is not required under this clause since the replacement of the coke drums does not cause an increase in the 30-day average emissions of any air pollutants from the DCU.

Regulation IV - PROHIBITIONS

Rule 401: Visible Emissions

This rule specifies that a person shall not discharge emissions from a source for a period or periods aggregating more than three minutes in any one hour which are as dark or darker in shade as that designated No. 1 on the Ringelmann Chart or emissions of such opacity that it obscures an observers view to an equal or greater level. This is equivalent to opacity of 20%.

Fugitive Components: Visible emissions are not expected from any of the fugitive components.

Coke Drums: Around 99 percent of the vapor emitted from the coke drums during the atmospheric venting portion of the depressurization cycle is steam so the plume from the vent stack contains visible condensed water vapor. In this case, visible emissions (opacity) observations must be made beyond the point in the plume at which condensed water vapor is no longer visible. Solid PM is present at such low concentrations relative to the amount of steam that no significant visible emission (opacity) is observed beyond the point at which the condensed water vapor is no longer visible. Replacement of the coke drums will not change the characteristics of this vent stream. Compliance with this rule is expected.

Rule 402: Nuisance

Fugitive Components: None fugitive components are expected to vent gases that will cause nuisance.

Coke Drums: The District has not received any nuisance complaints for DCU over the last five years. As discussed previously, the permit to construct for the DCU was conditioned with the requirement to vent the coke drums to the fractionators or VRS until the drum pressure reached 2 psig. This requirement significantly reduced emissions and nuisance potential for the coke drum depressurization step. Compliance with this rule is expected.

Rule 404: Particulate Matter - Concentration

This rule sets concentration limits for total PM (solid and condensable) emissions. The rule limit varies based on the quantity of exhaust gas (dry basis) discharged from a source.

Fugitive Components: Emissions from these components are in the form of liquid or gaseous leakage. No PM emissions are expected.

Coke Drums: A determination has been made by District Counsel that this rule is not applicable to coke drum vents.

Rule 405: Solid Particulate Matter – Weight

This rule sets solid PM mass emission limits for the processing of solid materials. The typical coke production for a coke drum batch is 683 tons. The total coking/decoking cycle time for a batch is about 24 hours. The process rate is conservatively estimated to be 57,000 lb/hr [(683 tons)(2000 lb/ton) / 24 hours]. The solid PM emission limit, as determined through interpolation of Table 405(a) in this rule at this material processing rate, is 18 lb/hr. The average solid PM emissions rate measured during the last two source tests of the atmospheric venting during the coke drum depressurization step was 0.16 lb/hr, which is well below the 18 lb/hr limit of this rule. Replacement of the coke drums will not impact PM emissions. Compliance with the solid PM mass emission limit of this rule is expected.

The emission of solid PM is also expected to occur during the coke drilling and coke removal step of the decoking cycle. During this step, a hole is hydraulically drilled down the center of the coke. Next, lateral hydraulic nozzles on the drill head are utilized to cut the coke into concentric rings or donuts starting from the bottom of the drum. The coke falls out the bottom of the drum. Due to safety concerns and the difficulty of collecting a representative sample, measurements of the solid PM emissions from this step have not been made. Compliance with the solid PM emission limits of this rule is expected since the coke has high moisture content due to the steaming/quenching steps of the decoking cycle and to the use of water to drill the coke.

Rule 407: Liquid and Gaseous Air Contaminants

This rule contains the following emission limits:

- Carbon monoxide (CO) - 2,000 ppmv (dry; 15 minute average) [407(a)(1)]
- Sulfur Compounds – 500 ppmv (calculated as SO2; 15 minute average [407(a)(2)(B)]

CO Limit - The average coke drum vent CO concentration measured during the last two source tests is 282 ppmv. Compliance with the 2000 ppmv limit is expected.

Sulfur Compound Limit - Compliance with the 500 ppmv sulfur compound limit on a 15-minute average basis is more difficult to assess due to the complex sampling environment and previously discussed changes to coke drum operating procedures. The complex sampling environment includes small sample vent duct, high moisture content and rapidly changing vent flows during the test. Note that all of the sulfur is expected to be in a reduced form since the coking process does not include oxygen. A 2003 Total Reduced Sulfur (TRS) source test of one of the drums demonstrated compliance with the limit.

Chevron tested all six of the drums in 2008. These tests, which were not required by source test condition D28.13, were performed due to a last minute request of the District. Therefore, they were not included in the approved source test protocol. Samples were collected in a tedlar bag downstream of the dry gas meter during the first 5 minutes of the PM source test for each drum. The vast majority of the sulfur was in the form of H2S. Measured H2S concentrations varied from 109 ppmv to 7698 ppmv on a dry basis. H2S was measured as non-detect in the vent gas samples for drums A and E. The non-detect values may be due partially to low sample volumes due to the short atmospheric vent times (7 and 15 minutes) for these two drums. As discussed previously, vent durations for the six drums varied from 5 to 62 minutes during the 2008 tests. The average vent gas H2S concentration for the 6 drums was 3420 assuming an H2S concentration of 100 ppmv each for the non-detect values.

Current vent gas sulfur compound concentrations and mass emissions are expected to be well below the concentrations seen in the 2008 test due to the implementation of improved uniform coke cooling/procedures, which reduced vent duration and vent gas pollutant concentrations. Vent gas durations currently average about 3 minutes. Measured average gaseous VOC concentrations during the 2011 source tests were more than 50% lower than the 2008 source tests and mass emissions were 96% lower. It is expected that H2S concentrations were reduced by an equal amount. Based on a 50% reduction, average vent gas H2S concentrations are estimated to be around 1700 ppmv for the 3-minute vent durations. This equates to 340 ppmv on a 15-minute average basis.

The requirement to test for TRS was added to source test condition D28.31 during the conversion of the DCU permit to construct to a permit to operate. Chevron is required to revise the source test protocol to include TRS prior to performance of the source test.

Rule 409: Combustion Contaminants

This rule is not applicable to the coke drums since no combustion take place in the drums.

Regulation IX - NEW SOURCE PERFORMANCE STANDARDS (NSPS)

Subpart J -- Standards of Performance for Petroleum Refineries

This NSPS is applicable to the following affected facilities in petroleum refineries:

- Fluid Catalytic Cracking Unit Catalyst Regenerators
- Fuel Gas Combustion Devices
- All Claus Sulfur Recovery Plants (SRPs)(except Claus Plants of 20 long tons per day (LTD) or less

DCUs are not subject to any requirements under this regulation.

40CFR60 Subpart Ja - Standards of Performance for Petroleum Refineries for Which Construction, Reconstruction or Modification Commenced After May 14, 2007

This NSPS is applicable to the following affected facilities in petroleum refineries which were constructed, reconstructed, or modified after May 14, 2007:

- Fluid Catalytic Cracking Unit Catalyst Regenerators,
- Fluid Coking Units
- Delayed Coking Units,
- Fuel Gas Combustion Devices (except flares), and
- Claus Sulfur Recovery Plants (SRPs)

Per §60.103a(b), the owner or operator of a DCU that is subject to this regulation shall vent a coke drum to a fuel gas system during vessel depressurizing until the coked rum reaches 5 psig. This work practice standard is the only requirement for DCUs.
According to §60.14(a), any physical or operational change to an existing facility which results in an increase in the emission rate (on an hourly basis) to the atmosphere of any pollutant to which a standard applies shall be considered a modification. The capacity of the drums is not being changed so the project will not cause a change in hourly throughput or hourly emission rate. Therefore, replacement of the drums is not a modification under this regulation.

According to §60.15(b), reconstruction means the replacement of components of an existing facility to such an extent that the fixed capital cost of the new components exceeds 50 percent of the fixed capital cost that would be required to construct a comparable entirely new facility. Fixed capital cost is defined in §60.15(c) as the capital needed to provide all the depreciable components. As specified in 60.100a(d) "fixed capital cost of the new components" includes the fixed capital cost of all depreciable components which are or will be replaced pursuant to all continuous programs of component replacement which are commenced within any 2-year period following May 14, 2007.

Chevron's engineering contractor estimated that a new DCU will cost $700,000,000 ± 30%. The following equipment is included in this estimate.

1. Main fractionator with reboilers, condensers, side columns (receive and return material to Main Fractionator), compressors, ejectors, and heat exchangers.
2. Cutting water and quench water system.
3. Coke drums w/ derricks and drilling equipment,
4. Compressors, ejectors, knockout pots, condensers, and other equipment used to blowdown the coke drums. This equipment is included because you can't operate a coker unless you blowdown the drums.
5. Coke pits.
6. Pumps, compressors, valves, instruments, pipe, and other equipment used to move material to, from, and between the above pieces of equipment.
7. Equipment to distribute utilities (air, water, steam, electricity) to the above equipment.
8. Structures to support the above equipment and provide access to it (concrete, steel, lights).
9. Portion of the control room supporting the above equipment.

The following equipment is not included in the estimate.

1. Fractionators (distillation, absorption, stripping) downstream of the main fractionator.
2. Coke handling equipment. This is the equipment to move the coke from the coke pits to storage or to transportation – trucks or railcars.
3. Coker heaters with combustion air blowers, heat exchangers such as air preheaters, air pollution control equipment and stacks. Pumps, compressors, valves, instruments, pipe, and other equipment used to move material to, from, and between the above pieces of equipment.
4. Equipment to distribute utilities (air, water, steam, electricity) to the above equipment.
5. Structures to support the above equipment and provide access to it (concrete, steel, lights).
6. Portion of the control room supporting the above equipment.

Chevron estimates that the CDRP will cost $156,000,000 ± 10%. Replacement of the coke drums is not considered to be reconstruction of the DCU since the high side of the estimated cost of replacing the coke drums ($171,600,000) is less than 50% of the low side of the estimated cost of a new DCU (490,000,000). Therefore, the DCU is not subject to this regulation. As discussed previous, the DCU permit currently contains a more stringent requirement to vent the coke drums to a fuel gas system until the coke drum pressure reaches 2 psig.

40CFR60 Subpart GGG – Standards of Performance for Equipment Leaks of VOCs in Petroleum Refineries and 40CFR60 Subpart GGGa – Standards of Performance for Equipment Leaks of VOCs in Petroleum Refineries for Which Construction, Reconstruction or Modification Commenced After November 7, 2006

Applicability: The following are affected facilities under these subparts:

- Compressors
- The group of all the equipment within a process unit.

Equipment is defined as "each valve, pump, pressure relief device, sampling connection system, open-ended valve or line, and flange or other connector in VOC service". From Subpart VVa (as referenced from GGGa), the definition of "*in VOC service*" is that "the piece of equipment contains or contacts a process fluid that is at least 10 percent VOC by weight".

Modification is defined in 40CFR60 Subpart A (§60.2) as "any physical change in, or change in the method of operation of, an existing facility which increases the amount of any air pollutant (to which a standard applies) emitted into the atmosphere by that facility or which results in the emission of any air pollutant (to which a standard applies) into the atmosphere not previously emitted."

Process unit is defined in §60.590 as "components assembled to produce intermediate or final products from petroleum, unfinished petroleum derivatives, or other intermediates; a process unit can operate independently if supplied with sufficient feed or raw materials and sufficient storage facilities for the product".

NSPS GGG - The DCU is currently subject to 40CFR60 Subpart GGG. "Fugitive emissions, miscellaneous" device no D3580 for the unit is tagged with condition H23.19, which specifies that the permit unit is subject to Rule 1173 and 40CFR60 Subpart GGG. NSPS Subpart GGG references the requirements of NSPS Subpart VV - Standards of Performance for Equipment leaks of VOC in the Synthetic Organic Chemicals Manufacturing Industry. In general, the equipment leak inspection and monitoring requirements of Rule 1173 are more stringent than this regulation but pertinent requirements of this regulation have been incorporated into Chevron's Leak Detection and Repair (LDAR) Program for fugitive emissions. Replacement of the coke drums is not expected to impact compliance with the requirements of this regulation. It is expected that Chevron will comply with the inspection, maintenance, and record keeping requirements of this rule.

NSPS GGGa - The fugitive components (equipment) in the DCU are not subject to 40CFR60 Subpart GGGa since it has not been modified or reconstructed after November 7, 2006. Replacement of the coke drums will not cause the unit to become subject to NSPS GGGa since there is not an increase in fugitive components or fugitive VOC emissions. Compressor K-501A (D3261) is subject to this NSPS since it was installed after November 7, 2006. The compressor device D3261 is tagged with condition H23.47, which specifies that it is subject to Rule 1173 and 40CFR60 Subpart GGGa.

It is specified in §60.482–3a(a) that each compressor shall be equipped with a seal system that includes a barrier fluid system and that prevents leakage of VOC to the atmosphere, except as provided in §60.482–1a(c) and paragraphs (h), (i), and (j) of this section. It is specified in paragraph (h) that a compressor is exempt from the requirements of paragraphs (a) and (b) of this section, if it is equipped with a closed vent system to capture and transport leakage from the compressor drive shaft back to a process or fuel gas system or to a control device that complies with the requirements of §60.482–10a. As specified in the equipment description, the subject compressor is equipped with a dry gas seal vented to a fuel gas system (LSFO VRS). Therefore, the compressor is exempt from the seal requirements specified in §60.482–3a(a) and (b). Compliance with the requirements of these regulations is expected.

40CFR60: Subpart QQQ: Standards of Performance for VOC Sources from Petroleum Refinery Wastewater Systems

Applicability: This regulation is applicable to a facility located in petroleum refineries for which construction, modification, or reconstruction commenced after May 4, 1987. The following are separate affected facilities under this regulation:

- An individual drain system (all process drains connected to the first common downstream junction box, together with their associated sewer lines and junction boxes, downstream to the receiving oil-water separator)
- An oil-water separator
- An aggregate facility (individual drain system together with ancillary downstream sewer lines and oil-water separators)

According to Chevron, this project will not include the installation or modification of any process drains or wastewater system components. Compliance with this rule should not be impacted by the replacement of the coke drums.

Regulation X - NATIONAL EMISSION STANDARD FOR HAZARDOUS AIR POLLUTANTS (NESHAPS)

Subpart CC: National Emission Standards for Hazardous Air Pollutants from Petroleum Refineries

This Subpart applies to petroleum refining sources and related emission sources that are specified in section 63.640 (c) (5) through (c) (7) (e.g. miscellaneous process vents (except for FCCU, SRU, and CRU vents), storage vessels, wastewater stream, equipment leaks, gasoline loading racks, marine vessel loading, etc.) that are located in a major source and emit or have equipment contacting one or more of the hazardous air pollutants (HAPs) listed in Table 1 of this subpart. This subpart took effect on August 18, 1998 and was last amended on April 25, 2001.

Applicability for Equipment Leaks: The equipment leak standards for existing sources as specified in 63.648 are applicable to fugitive components that are "in organic hazardous air pollutant service". In "organic hazardous air pollutant service" is defined as a piece of equipment that either contains or contacts a fluid (liquid or gas) that is at least 5% by weight of total organic HAPs as determined according to 63.180(d).

Some of the existing fugitive components and in the DCU are subject to the requirements of this regulation since the components are "in organic hazardous air pollutant service". The "fugitive emissions, miscellaneous" device (D3580), which represents the fugitive components in the unit, is tagged with "HAP: 40CFR 63 Subpart CC, 5-25-2001" to denote the applicability of this regulation.

This regulation refers to the fugitive component monitoring requirements of NSPS Subpart VV and NESHAP Subpart H with exceptions that are specifically noted in the regulation. In general, the equipment leak inspection and monitoring requirements of District Rule 1173 are more stringent than this regulation but pertinent requirements of this regulation have been incorporated into Chevron's Inspection and Monitoring (I&M) Program for fugitive emissions. It is expected that Chevron will comply with the inspection, maintenance, and record keeping requirements of this rule.

Applicability for Miscellaneous Process Vents: *Miscellaneous process vent* is defined as "a gas stream containing greater than 20 parts per million by volume organic HAP that is continuously or periodically discharged during normal operation of a petroleum refining process unit. Miscellaneous process vents include gas streams that are discharged directly to the atmosphere, gas streams that are routed to a control device prior to discharge to the atmosphere, or gas streams that are diverted through a product recovery device prior to control or discharge to the atmosphere".

The definition of a *miscellaneous process vent* at 40CFR63.641 specifies a number of vent streams that are not considered to be *miscellaneous process vents*, which are subject to the requirements of this rule. Some of the streams that are included in this list of exempt streams are:

- Gaseous streams routed to a fuel gas system
- Relief valve discharges

- "Episodic or nonroutine releases such as those associated with startup, shutdown, malfunction, maintenance, depressuring, and catalyst transfer operations.
- Coking unit vents associated with coke drum depressuring at or below a coke drum outlet pressure of 15 psig, deheading, draining, or decoking (coke cutting), or pressure testing after decoking.

All of the process vents in the Delayed Coking Unit are covered by one of these exemptions. Therefore, the unit does not have any process vents that are subject to the requirements of this regulation.

Rule 1173: Control of Volatile Organic Compound Leaks and Releases from Components at Petroleum Facilities and Chemical Plants

This rule is intended to control volatile organic compound (VOC) leaks from fugitive components at refineries, chemical plants, oil and gas production fields, natural gas processing plants, and pipeline transfer stations. It contains identification requirements, leak standards, inspection requirements, maintenance and repair requirements, and recordkeeping and reporting requirements for fugitive components.

There are no additional fugitive components being installed for this project. Chevron has an existing fugitive emission component inspection and monitoring (I&M) program for compliance with the requirements of this rule.

REGULATION XIII - NEW SOURCE REVIEW

As specified in Rule 1301, Regulation XIII, sets forth pre-construction review requirements for new, modified, or relocated facilities, to ensure that the operation of such facilities does not interfere with progress in attainment of the national ambient air quality standards (NAAQS), and that future economic growth within the South Coast Air Quality Management District (District) is not unnecessarily restricted. The specific air quality goal of this regulation is to achieve no net increases from new or modified permitted sources of nonattainment air contaminants or their precursors.

The South Coast Air Basin (SOCAB) is designated in attainment of the NAAQSs for CO, NOx and SOx. The following are currently considered nonattainment air contaminants that are subject to new source review (NSR): NOX, SOx, $PM_{2.5}$, PM_{10}, and VOC. NOx and VOC are included since they are precursors for ozone. NOx, SOx and VOC are included as $PM_{2.5}$ and PM_{10} precursors.

NSR requirements for these attainment pollutants are specified in the following rules:

- Rule 1303 – PM10 and VOC (all facilities); NOx and SOx (non-RECLAIM facilities)
- Rule 1325 – PM2.5
- Rule 2005 – NOx and SOx (RECLAIM facilities)

Since Chevron is a RECLAIM facility, it is subject to the NSR requirements for NOx and SOx specified in Rule 2005 of the RECLAIM regulation (Regulation XX). Sources that emit ammonia, CO, and Ozone Depleting Compounds (ODCs) are subject to only the BACT requirements of Rule 1303. As specified in a Policy and Procedures memo from Mr, Mohsen

Nazemi, Deputy Executive Officer for the District's Engineering and Compliance Office, combustion sources are subject to only the BACT requirements for CO.

Rule 1303: Requirements

This rule requires the Executive Officer to deny a Permit to Construct for any new, modified or relocated source which results in an emission increase of CO, PM10, VOC, any ozone depleting compound, or ammonia, unless BACT is used. This rule also requires modeling and offset (among other requirements) if there is a net increase in PM10 or VOC emissions for any new or modified source. The definition of "Source" in Rule 1302(ao) is "any permitted individual unit, piece of equipment, article, machine, process, contrivance, or combination thereof, which may emit or control an air contaminant. This includes any permit unit at any non-RECLAIM facility and any device at a RECLAIM facility."

Since the DCU has been subject to this regulation in the past, the net increase in CO, PM10 and VOC emissions is calculated pursuant to 1306(b)(d) as the post-modification maximum potential to emit minus the pre-modification potential to emit. The CDRP will not cause a net increase in the maximum potential emissions of CO, PM10, or VOC since the coke drums will be replaced with drums of the same size and capacity. Therefore, the CDRP is not subject to any requirements under this rule.

Rule 1325: Federal PM2.5 New Source Review Program

This NSR rule for PM2.5 and its precursors NOx and SO2 was adopted by the District's Governing Board on June 3, 2011. As discussed in the *Calculation Section* of this evaluation, the substantive definitions and requirements of this rule have been directly incorporated from Title 40 of the Code of Federal Regulations (CFR) Part 52.21 - *Prevention of Significant Deterioration of Air Quality*. Therefore, it mirrors that federal NSR program. It has not currently been approved by EPA as a component of the State Implementation Plan (SIP).

As documented in the *Calculation Section* of this evaluation, the CDRP is not a major modification under this rule since the PM2.5, NOx and SO2 emission increases of 0.9 ton/yr, 2.9 ton/yr and 4.5 ton/yr, respectively, are well below the "significant emission increase" levels of 10 ton/yr, 40 ton/yr and 40 ton/yr, respectively, for PM2.5, NOx and SO2. Therefore, the CDRP is not subject to any requirements under this regulation.

Regulation XIV - TOXICS AND OTHER NON-CRITERIA POLLUTANTS

Rule 1401: New Source Review of Carcinogenic Air Contaminants

Requirements – Rule 1401 contains the following requirements:

1) *(d)(1) MICR and Cancer Burden* - The cumulative increase in MICR which is the sum of the calculated MICR values for all toxic air contaminants emitted from the new, relocated or modified permit unit will not result in any of the following:
   (A) an increased MICR greater than one in one million (1.0×10^{-6}) at any receptor location, if the permit unit is constructed without T-BACT;
   (B) an increased MICR greater than ten in one million (1.0×10^{-5}) at any receptor location, if the permit unit is constructed with T-BACT;
   (C) a cancer burden greater than 0.5.

2) *(d)(2) Chronic Hazard Index* - The cumulative increase in total chronic HI for any target organ system due to total emissions from the new, relocated or modified permit unit will not exceed 1.0 at any receptor location.
3) *(d)(3) Acute Hazard Index* - The cumulative increase in total acute HI for any target organ system due to total emissions from the new, relocated or modified permit unit will not exceed 1.0 at any receptor location.

Analysis – Per Rule 1401(g)(1)(C), the requirements of this rule do not apply to this project since the current coke drums are being replaced by functionally identical drums with no increase in the maximum rating of the drums and no increase in the emission of any toxic air contaminants.

REGULATION XVII - PREVENTION OF SIGNIFICANT DETERIORATION (PSD)

The PSD program is the federal New Source Review (NSR) program for pollutants for which an area is in attainment with or unclassified with respect to a National Ambient Air Quality Standard (NAAQS) as well as greenhouse gases (GHG).

Rule 1703 – PSD Analysis (& Associated Rules 1701, 1702, 1704, 1706, 1710 & 1713)

These rules contain the PSD requirements for attainment pollutants and selected unclassified pollutants. As discussed earlier, SOCAB is currently designated as attainment with NAAQSs for SO2, NO2, CO, and Lead. On March 3, 2003, AQMD's PSD delegation was rescinded by EPA. AQMD and EPA signed a "Partial PSD Delegation Agreement" effective July 11, 2007. According to a memo from Mr. Mohsen Nazemi, who is the Deputy Executive Officer of the AQMD Engineering and Compliance Division, this Partial Delegation Agreement is intended to delegate the authority and responsibility to AQMD for issuance of initial PSD permits and for PSD permit modifications where the applicant seeks to use the emissions calculation methodology set forth in AQMD Regulation XVII instead of those promulgated in 40 CFR 52.21 (NSR Reform).

Chevron has selected to utilize the calculation methodology specified in Rule 1706 of this regulation. Therefore, the Coke Drum Replacement Project must be evaluated for compliance with the requirements of the subject rules for SO2, NO2, CO and lead. According to 1703(a)(2), a permit to construct shall be denied for any permit unit with a net emission increase in an attainment air pollutant unless the permit unit is constructed using BACT for that pollutant. As specified in the District's BACT guidelines, it is District policy that BACT is required for any net emission increase that exceeds 1.0 lb per day. Other requirements are specified in 1703(a)(3) for a project (major modification) at a stationary source that causes a significant emission increase of an attainment air pollutant. According to the definition in Rule 1702(s), *significant emission increase* means any attainment air pollutant for which the net cumulative emission increase of that air pollutant is greater than the amount specified as follows: SO2 – 40 ton/yr, NO2 – 40 ton/yr, CO – 100 ton/yr and lead compounds – 0.6 ton/yr.

The DCU does not emit significant amounts of SO2, NO2 and lead so no further analysis is required. As seen in the *Calculation Section* of this evaluation, the maximum potential CO emissions from the new coke drums are estimated to be 110 lb/yr (0.06 ton/yr and 0.3 lb/day). Since the maximum potential CO emissions for the DCU are below 1.0 lb/day and 100 tons/yr, no further analysis is required. The CDRP is not subject to any requirements under

this regulation.

Rule 1714 – Prevention of Significant Deterioration for Greenhouse Gases

This rule sets forth preconstruction review requirements for greenhouse gases (GHG), which is defined as an aggregate group of six GHGs: carbon dioxide, nitrous oxide, methane, hydrofluorocarbons, perfluorocarbons, and sulfur hexafluoride. This rule incorporates through reference most of its requirements from 40CFR52.21 – *Prevention of Serious Deterioration of Air Quality* via reference.

As documented in the *Calculation Section* of this evaluation, the CDRP is not a major modification under this rule since the CO2e emission increase of 20,029 ton/yr is well below the "significant emission increase" level of 75,000 ton/yr. Therefore, the CDRP is not subject to any requirements under this regulation.

Regulation XX - REGIONAL CLEAN AIR INCENTIVES MARKET (RECLAIM)

RECLAIM is a market incentive program designed to allow facilities flexibility in achieving emission reduction requirements for Oxides of Nitrogen (NOx), and Oxides of Sulfur (SOx). The Chevron Refinery (ID 800030) is a Cycle II RECLAIM facility. The coke drums are not subject to this regulation since they do not emit significant amounts of NOx and SOx.

Regulation XXX – TITLE V PERMITS

The initial Title V permit for the refinery was sent to Chevron on September 29, 2009 with an effective date of October 12, 2009. The permits issued for this project will be issued as a revision of the Title V permit. Permit revisions are categorized into the following four types: *administrative, minor, de minimis significant and significant*. The review and distribution requirements for each revision type are summarized in the following table.

Title V Permit Revisions: Review and Distribution Requirements

Revision Type	Permit Review and Distribution Requirements		
	EPA Review (45-day)	Public Notice (30-day)	Send Final Permit to EPA
Administrative	No	No	Yes
Minor	Yes	No	Yes
De Minimis Significant	Yes	No	Yes
Significant	Yes	Yes	Yes

As defined in Rule 3000, a minor Title V permit revision is any revision that:

(1) does not require or change a case-by-case evaluation of: reasonably available control technology (RACT) pursuant to Title I of the federal Clean Air Act; or maximum achievable control technology (MACT) pursuant to 40 CFR Part 63, Subpart B;
(2) does not violate a regulatory requirement;
(3) does not require any significant change in monitoring terms or conditions in the permit;

(4) does not require relaxation of any recordkeeping, or reporting requirement, or term, or condition in the permit;
(5) does not result in an emission increase of RECLAIM pollutants over the facility starting Allocation plus nontradeable Allocations, or higher Allocation amount which has previously undergone a significant permit revision process;
(6) does not result in an increase in emissions of a pollutant subject to Regulation XIII - New Source Review or a hazardous air pollutant;
(7) does not establish or change a permit condition that the facility has assumed to avoid an applicable requirement;
(8) is not an installation of a new permit unit subject to a New Source Performance Standard (NSPS) pursuant to 40 CFR Part 60, or a National Emission Standard for Hazardous Air Pollutants (NESHAP) pursuant to 40 CFR Part 61 or 40 CFR Part 63; and,
(9) is not a modification or reconstruction of an existing permit unit, resulting in new or additional NSPS requirements pursuant to 40 CFR Part 60, or new or additional NESHAP requirements pursuant to 40 CFR Part 61 or 40 CFR Part 63; or,
(10) incorporates an existing general permit, as defined in subdivision (e) of Rule 3004, and its associated requirements, into another Title V permit.

This minor revision, which is being processed under Title V revision application no. 527432, will be sent to EPA for a 45-day review period. Public notice is not required.

CONCLUSION / RECOMMENDATION:

Based on the foregoing evaluation, it is expected that the subject applications will comply with all applicable District Rules and Regulations. It is recommended that a Permit to Construct, Section H of the RECLAIM/Title V Permit, be issued for the proposed replacement of the coke drums in the DCU.

Appendix A: VOC Emission Estimate for Fugitive Components in Delayed Coking Unit

Equipment Type	Service	Fugitive Count (1)	Emission Factor (lb/yr) (2)	Annual VOC Emissions (lb/yr)
Valves - Sealed Bellow	Gas/Vapor	562	0.00	0.0
	Light Liquid	315	0.00	0.0
	Heavy Liquid	0	0.00	0.0
Valves - Low emission ≤ 500 ppmv, or Live loaded w/ dual seal system	Gas/Vapor	603	4.55	2744
	Light Liquid	760	4.55	3458
	Heavy Liquid	2418	4.55	11002
Flanges	Light Liquid/Vapor	5042	6.99	35244
	Heavy Liquid	5070	6.99	35439
Connectors	Light Liquid/Vapor	4367	2.86	12490
	Heavy Liquid	4992	2.86	14277
Pumps	Light Liquid (double seal)	18	46.83	843
	Light Liquid (sealless type)	2	0	0.0
	Heavy Liquid (single seal)	26	17.21	447
Compressors	Gas/Vapor	1	9.09	9
PRV's	All (To Atmosphere)	2	9.09	18
	All (Closed Vent)	146	0	0.0
Drains (with p-trap)	All	130	9.09	1182
		TOTAL	**lb/yr**	**117153**
			lb/day (3)	**325.4**

(1) Based on fugitive count provided by Mr. Pete Allen of Chevron on March 19, 2012.
(2) Emission factors based on correlation equations from the *California Implementation Guidelines for Estimating Mass Emissions of Fugitive Hydrocarbon Leaks at Petroleum*
(3) 30-day average emissions based on annual emissions divided by 360.

Appendix B: Calculation of Potential Throughput Increase due to CDRP – Vacuum Resid Processing in Delayed Coking Unit

Start Date of Drum Repair	Drum	Daily Feed Rate During Repair	Daily Capacity Loss During Repair (1)	Total Repair Time	Total Capacity Loss Per Repair
		Mbbl / d	Mbbl / d	Days	Mbbls
3/23/08	F Drum	51.5	23.5	4.5	105.8
8/3/08	A Drum	49.5	25.5	3.0	76.5
9/17/08	B Drum	54.6	20.4	5.0	102.0
1/26/09	B and E Drums (2)	40.5	34.5	5.5	189.8
2/15/09	A Drum	53.2	21.8	1.5	32.7
2/24/09	A Drum	55.3	19.7	4.5	88.7
3/5/09	A Drum	54.1	20.9	2.0	41.8
4/3/09	F Drum	55.0	20.0	1.0	20.0
8/11/09	D Drum	46.3	28.7	3.0	86.1
9/20/09	E Drum	52.0	23.0	3.0	69.0
10/4/09	A Drum	52.2	22.8	2.5	57.0
10/10/09	F Drum	52.1	22.9	1.5	34.4
10/13/09	B Drum	43.9	31.1	2.5	77.8
10/30/09	F Drum	36.8	38.2	5.5	210.1
12/13/09	A Drum	54.4	20.6	3.0	61.8
12/24/09	A and F Drums (3)	47.6	27.4	5.0	137.0
Total Lost Capacity during 2008 and 2009					**1390**

(1) Daily capacity loss is determined by subtracting the actual daily vacuum resid feed rate during a repair from the maximum DCU capacity of 75 Mbbl/day.
(2) For a portion of the 5.5 days two modules were out of service.
(3) Crack discovered in Drum A immediately following repair of Drum F.

Appendix B: Calculation of Potential Throughput Increase due to CDRP – Crude Oil Processing in No. 2 and No. 4 Crude Units

Start Date of Drum Repair	Drum	Avg. Crude Feed Rate Prior to Repair	Avg. Crude Feed Rate During Repair (1)	Reduction in Daily Feed Rate During Repair	Total Repair Time	Total Capacity Loss Per Repair
		Mbbl / d	Mbbl / d	Mbbl / d	Days	Mbbls
3/23/08	F Drum	289.2	271.6	17.6	4.5	79.2
8/3/08	A Drum	254.4	256.9	0	3.0	0
9/17/08	B Drum	270.4	263.0	7.4	5.0	37.0
1/26/09	B and E Drums	268.2	246.6	21.6	5.5	118.8
2/15/09	A Drum	244.2	245.8	0	1.5	0
2/24/09	A Drum	271.1	287.4	0	4.5	0
3/5/09	A Drum	(1)	(1)	(1)	2.0	0
4/3/09	F Drum	275.1	279.7	0	1.0	0
8/11/09	D Drum	236.5	238.4	0	3.0	0
9/20/09	E Drum	254.3	254.4	0	3.0	0
10/4/09	A Drum	247.9	244.7	3.2	2.5	8.0
10/10/09	F Drum	243.6	238.2	5.4	1.5	8.1
10/13/09	B Drum	(2)	(2)	(2)	2.5	0
10/30/09	F Drum	150.9	157.2	0	5.5	0
12/13/09	A Drum	218.9	263.4	0	3.0	0
12/24/09	A and F Drums	262.7	264.1	0	5.0	0
Total Lost Capacity during 2008 and 2009						**251.1**

(1) Air Liquide Hydrogen Plant and Isomax Complex shut down unexpectedly on March 4. The shutdowns caused refinery-wide steam and hydrogen shortages that forced the No. 4 Crude Unit to operate well below planned rates. Therefore, it is not possible to determine the impact of coke drum downtime for repairs.

(2) The No. 2 Crude Unit was shut down on October 12 for PRO Project tie-ins. Therefore, it is not possible to determine the impact of coke drum downtime for repairs.

Appendix B: Calculation of Potential Throughput Increase due to CDRP – Downstream Processing Units

Process Unit	Emission Source	Annual T'put (1)	T'put Increase Due to Additional Crude Processing (2)	T'put Increase Due to Additional Resid Processing (3)	Combined T'put Increase
		Mbbl/yr	Mbbl/yr	Mbbl/yr	Mbbl/yr
No. 4 CU - Atm.	F-1100A/B	73,012	99.4	0	99.4
No. 4 CU - Vac.	F-1160A/B	40,171	56.2	0	56.2
No. 2 CU - Atm.	F-301B	19,251	26.2	0	26.2
No. 2 CU - Vac.	F-201A	12,026	14.8	0	14.8
DCU	F-501A/B/C	22,774	0	695.1	695.1
DCU	Drum Vents (4)	2,065	0	68.0	68
DCU	Coke Handl'g (5)	1,391	0	41.8	41.8
NHT2	F-1210	4,472	5.5	0.0	5.5
NHT1	F-4531	14,347	17.8	139.0	156.8
NHT1	F-4532	14,347	17.8	139.0	156.8
DFH	F-302	5,544	6.9	48.7	55.5
VGO	F-1610	14,861	18.4	55.6	74.0
VGO	F-1660	14,861	18.4	55.6	74.0
Isomax	F-510	16,409	20.3	83.4	103.8
Isomax	F-520	16,409	20.3	83.4	103.8
Isomax	F-530	16,409	20.3	83.4	103.8
Isomax	F-540	16,409	20.3	83.4	103.8
Isomax	F-610	16,409	20.3	83.4	103.8
Isomax	F-620	16,409	20.3	83.4	103.8
Isomax	F-720	16,409	20.3	83.4	103.8
Isomax	F-731	16,409	20.3	83.4	103.8
VRDS	F-1510	22,897	28.4	173.8	202.2
VRDS	F-1520	22,897	28.4	173.8	202.2
CCR	F-410	14,794	0.0	117.6	117.6
CCR	F-420	14,794	0.0	117.6	117.6
CCR	F-430	14,794	0.0	117.6	117.6
CCR	F-440	14,794	0.0	117.6	117.6
SNR	F-1330 (6)	23,250			328.2
SNR	Reactor Feed (6)	23,250			328.2
SRU	Incinerators (7)	5,327	5.7	64.8	70.5

(1) Average annual throughput for 2008 and 2009.
(2) Potential increase in throughput caused by the increase in crude oil processing in the No. 2 and No. 4 Crude Units due to the elimination of downtime for repair of coke drum cracks.
(3) Potential increase in throughput from the processing of additional vacuum resid due to the elimination of downtime for repair of coke drum cracks.
(4) Unit is no. of drum vents per year.
(5) Unit is Mtons of coke per year (dry) produced.
(6) Unit is MMscf of hydrogen produced.
(7) Unit is MMscf of acid gas feed.

Appendix C: Rule 1325 Evaluation – Calculation of NOx, SO2 and PM2.5 Emission Factors

Process Unit	Emission Source	T'put (5)	NOx	NOx EF	SO2	SO2 EF	PM2.5	PM2.5 EF
		Mbbl/yr	lb/yr	lb/Mbbl	lb/yr	lb/Mbbl	lb/yr	lb/Mbbl
No. 4 CU - Atm.	F-1100A/B	73,012	32,325	0.442	29,874	0.410	26,968	0.370
No. 4 CU - Vac.	F-1160A/B	40,171	12,324	0.307	11,392	0.284	10,062	0.250
No. 2 CU - Atm.	F-301B	19,251	38,150	1.981	9,736	0.506	9,202	0.478
No. 2 CU - Vac.	F-201A	12,026	893	0.074	2,070	0.172	3,482	0.289
DCU	F-501A/B/C	22,774	36,625	1.608	55,256	2.413	18,477	0.811
DCU	Drum Vents (2)	2,065	na.	na.	na.	na.	268	0.13
DCU	Coke Handl'g (3)	1,391	na.	na.	na.	na.	1808	1.30
NHT2	F-1210	4,472	7,775	1.738	899	0.201	855	0.191
NHT1	F-4531	14,347	834	0.058	651	0.045	1,593	0.111
NHT1	F-4532	14,347	9,736	0.678	490	0.034	1,342	0.093
DFH	F-302	5,544	15,815	2.887	1,946	0.353	1,730	0.316
VGO	F-1610	14,861	59,595	4.010	2,735	0.184	2,369	0.159
VGO	F-1660	14,861	8,883	0.598	1,693	0.114	1,501	0.101
Isomax	F-510	16,409	39,700	2.397	702	0.043	1,829	0.110
Isomax	F-520	16,409	36,604	2.249	676	0.042	1,676	0.103
Isomax	F-530	16,409	39,266	2.382	727	0.045	1,960	0.119
Isomax	F-540	16,409	37,675	2.316	713	0.044	1,909	0.118
Isomax	F-610	16,409	43,314	2.648	1,145	0.070	2,899	0.177
Isomax	F-620	16,409	34,811	2.118	824	0.051	2,057	0.126
Isomax	F-720	16,409	98,311	6.034	7,732	0.475	19,000	1.159
Isomax	F-731	16,409	39,386	2.401	3,961	0.242	9,975	0.607
VRDS	F-1510	22,897	4,451	0.192	1,697	0.074	1,330	0.059
VRDS	F-1520	22,897	4,689	0.202	1,743	0.076	1,675	0.073
CCR	F-410	14,794	4,641	0.314	2,975	0.202	4,464	0.297
CCR	F-420	14,794	4,659	0.316	2,982	0.202	5,904	0.398
CCR	F-430	14,794	3,029	0.205	1,944	0.132	4,826	0.328
CCR	F-440	14,794	1,936	0.131	1,229	0.083	4,016	0.276
SNR	F-1330 (4)	23,250	14,157	0.610	19,679	0.846	34,836	1.499
SRU	Incinerators (5)	5,327	88,238	16.63	263,306	49.38	1,247	0.235

(1) Average annual throughput for 2008 and 2009.
(2) Unit is no. of drum vents per year.
(3) Unit is tons of coke per year (dry) produced.
(4) Unit is MMscf of hydrogen produced.
(5) Unit is MMscf of acid gas feed.

Appendix C: Rule 1325 Evaluation – Estimation of Potential NOx, SO2 and PM2.5 Emission Increases

Process Unit	Emission Source	T'put Increase	NOx EF	NOx Increase	SO2 EF	SO2 Increase	PM2.5 EF	PM2.5 Increase
		Mbbl/yr	lb/Mbbl	lb/yr	lb/Mbbl	lb/yr	lb/Mbbl	lb/yr
No. 4 CU - Atm	F-1100A/B	99.4	0.442	43.9	0.41	40.7	0.37	36.8
No. 4 CU - Vac	F-1160A/B	56.2	0.307	17.3	0.284	16.0	0.25	14.1
No. 2 CU - Atm	F-301B	26.2	1.981	51.9	0.506	13.3	0.478	12.5
No. 2 CU - Vac	F-201A	14.8	0.074	1.1	0.172	2.5	0.289	4.3
DCU	F-501A/B/C	695.1	1.608	1117.8	2.413	1677.3	0.811	563.7
DCU	Drum Vents	68 (1)	na.	na.	na.	na.	0.13	8.8
DCU	Coke Handl'g	41.8 (2)	na.	na.	na.	na.	1.30	54.3
NHT2	F-1210	5.5	1.738	9.6	0.201	1.1	0.191	1.1
NHT1	F-4531	156.8	0.058	9.1	0.045	7.1	0.111	17.4
NHT1	F-4532	156.8	0.678	106.3	0.034	5.3	0.093	14.6
DFH	F-302	55.5	2.887	160.3	0.353	19.6	0.316	17.5
VGO	F-1610	74.0	4.01	296.9	0.184	13.6	0.159	11.8
VGO	F-1660	74.0	0.598	44.3	0.114	8.4	0.101	7.5
Isomax	F-510	103.8	2.397	248.7	0.043	4.5	0.11	11.4
Isomax	F-520	103.8	2.249	233.3	0.042	4.4	0.103	10.7
Isomax	F-530	103.8	2.382	247.1	0.045	4.7	0.119	12.3
Isomax	F-540	103.8	2.316	240.3	0.044	4.6	0.118	12.2
Isomax	F-610	103.8	2.648	274.7	0.07	7.3	0.177	18.4
Isomax	F-620	103.8	2.118	219.7	0.051	5.3	0.126	13.1
Isomax	F-720	103.8	6.034	626.0	0.475	49.3	1.159	120.2
Isomax	F-731	103.8	2.401	249.1	0.242	25.1	0.607	63.0
VRDS	F-1510	202.2	0.192	38.8	0.074	15.0	0.059	11.9
VRDS	F-1520	202.2	0.202	40.8	0.076	15.4	0.073	14.8
CCR	F-410	117.6	0.314	36.9	0.202	23.8	0.297	34.9
CCR	F-420	117.6	0.316	37.2	0.202	23.8	0.398	46.8
CCR	F-430	117.6	0.205	24.1	0.132	15.5	0.328	38.6
CCR	F-440	117.6	0.131	15.4	0.083	9.8	0.276	32.5
SNR	F-1330	328.2 (3)	0.61	200.2	0.846	277.7	1.499	492.0
SRU	Incinerators	70.5 (4)	16.63	1172.7	49.38	3482.2	0.235	16.6
Additional RFG Firing		na.	na.	na.	na.	3180.0	na.	na.
Total Emission Increase				**5,764 lb/yr 2.9 ton/yr**		**8,953 lb/yr 4.5 ton/yr**		**1,714 lb/yr 0.86 ton/yr**

(1) Unit is no. of drum vents per year.
(2) Unit is tons of coke per year (dry) produced.
(3) Unit is MMscf of hydrogen produced per year.
(4) Unit is MMscf of acid gas feed per year.

Appendix D: Rule 1714 Evaluation – Calculation of CO2 Emission Factors for Subject Combustion Sources and SNR Hydrogen Plant

Process Unit	Emission Unit	Fuel Drum	Fuel Based CO2 EF (1)	Fuel Gas (2)	CO2 Emissions	T'put (3)	T'put Based CO2 EF
			lb/MMscf	MMscf/ yr	lb/yr	Mbbl/yr	lb/Mbbl
No. 4 CU - Atm	F-1100A/B	V-1800	147,629	3,596	530,843,168	73,012	7,271
No. 4 CU - Vac	F-1160A/B	V-1800	147,629	1,342	198,056,689	40,171	4,930
No. 2 CU - Atm	F-301B	V-4540	123,625	1,126	139,231,316	19,251	7,233
No. 2 CU - Vac	F-201A	V-1000	94,667	568	53,723,523	12,026	4,467
DCU	F-501A/B/C	V-500	143,059	2,464	352,443,817	22,774	15,476
NHT2	F-1210	V-1800	147,629	114	16,825,141	4,472	3,762
NHT1	F-4531	V-846	130,718	386	50,457,148	14,347	3,517
NHT1	F-4532	V-846	130,718	179	23,392,640	14,347	1,631
DFH	F-302	V-500	143,059	231	33,010,864	5,544	5,954
VGO	F-1610	V-1800	147,629	316	46,628,620	14,861	3,138
VGO	F-1660	V-1800	147,629	200	29,547,944	14,861	1,988
Isomax	F-510	V-846	130,718	244	31,875,584	16,409	1,943
Isomax	F-520	V-846	130,718	224	29,215,473	16,409	1,781
Isomax	F-530	V-846	130,718	261	34,156,613	16,409	2,082
Isomax	F-540	V-846	130,718	255	33,280,803	16,409	2,028
Isomax	F-610	V-846	130,718	386	50,515,971	16,409	3,079
Isomax	F-620	V-846	130,718	274	35,855,947	16,409	2,185
Isomax	F-720	V-846	130,718	2,533	331,160,981	16,409	20,182
Isomax	F-731	V-846	130,718	1,330	173,854,940	16,409	10,595
VRDS	F-1510	V-1800	147,629	217	32,072,400	22,897	1,401
VRDS	F-1520	V-1800	147,629	223	32,980,319	22,897	1,440
CCR	F-410	V-846	130,718	1,081	141,240,799	14,794	9,547
CCR	F-420	V-846	130,718	1,088	142,155,825	14,794	9,609
CCR	F-430	V-846	130,718	711	92,875,139	14,794	6,278
CCR	F-440	V-846	130,718	452	59,019,177	14,794	3,989
SNR	F-1330	V-1800	147,629	3,274	483,263,532	23,250 (4)	20,786
SNR Feed	Reactor Feed	na.			682,348,800	23,250 (4)	29,349
SRU	Incinerators	na.	127,666	569	72,578,121	5,327 (5)	13,625
SRU	Acid Gas Feed (6)	na.			331560000 (6)	5,327 (5)	6,224

(1) Developed for 2009 EPA GHG report.
(2) Conservatively assume that all fuel gas is refinery fuel gas.
(3) Average annual throughput for 2008 and 2009.
(4) Unit is MMscf of hydrogen produced.
(5) Unit is MMscf of acid gas feed.
(6) CO2 in acid gas feed and methane in acid gas feed that is converted to CO2 (based on 2006 analysis of acid gas feed).

Appendix D: Rule 1714 Evaluation – Estimation of Potential CO2 Emission Increases

Process Unit	Emission Source	T'put Increase	CO2 EF	CO2 Emission Increase
		Mbbl/yr	lb/Mbbl	lb/yr
No. 4 CU - Atm.	F-1100A/B	99.4	7,271	722,403
No. 4 CU - Vac.	F-1160A/B	56.2	4,930	277,109
No. 2 CU - Atm.	F-301B	26.2	7,233	189,476
No. 2 CU - Vac.	F-201A	14.8	4,467	66,202
DCU	F-501A/B/C	695.1	15,476	10,757,755
NHT2	F-1210	5.5	3,762	20,851
NHT1	F-4531	156.8	3,517	551,485
NHT1	F-4532	156.8	1,631	255,750
DFH	F-302	55.5	5,954	330,624
VGO	F-1610	74.0	3,138	232,298
VGO	F-1660	74.0	1,988	147,167
Isomax	F-510	103.8	1,943	201,588
Isomax	F-520	103.8	1,781	184,781
Isomax	F-530	103.8	2,082	216,010
Isomax	F-540	103.8	2,028	210,407
Isomax	F-610	103.8	3,079	319,450
Isomax	F-620	103.8	2,185	226,696
Isomax	F-720	103.8	20,182	2,093,905
Isomax	F-731	103.8	10,595	1,099,243
VRDS	F-1510	202.2	1,401	283,225
VRDS	F-1520	202.2	1,440	291,109
CCR	F-410	117.6	9,547	1,122,767
CCR	F-420	117.6	9,609	1,130,058
CCR	F-430	117.6	6,278	738,319
CCR	F-440	117.6	3,989	469,123
SNR	F-1330 (1)	328.2	20,786	6,822,477
SNR	Reactor Feed(1)(2)	328.2	29,349	9,633,064
SRU	Incinerators (3)	70.5	13,625	960,816
SRU	Acid Gas Feed (3)	70.5	6224	438,792
Total CO2 Emission Increase				**39,992,948 lb/yr 19,996 ton/yr**

(1) Unit is MMscf of hydrogen produced per year.
(2) Byproduct CO2 from the SNR Hydrogen Plant.
(3) Unit is MMscf of acid gas feed per year.
(4) CO2 in acid gas feed and methane in acid gas feed that is converted to CO2.