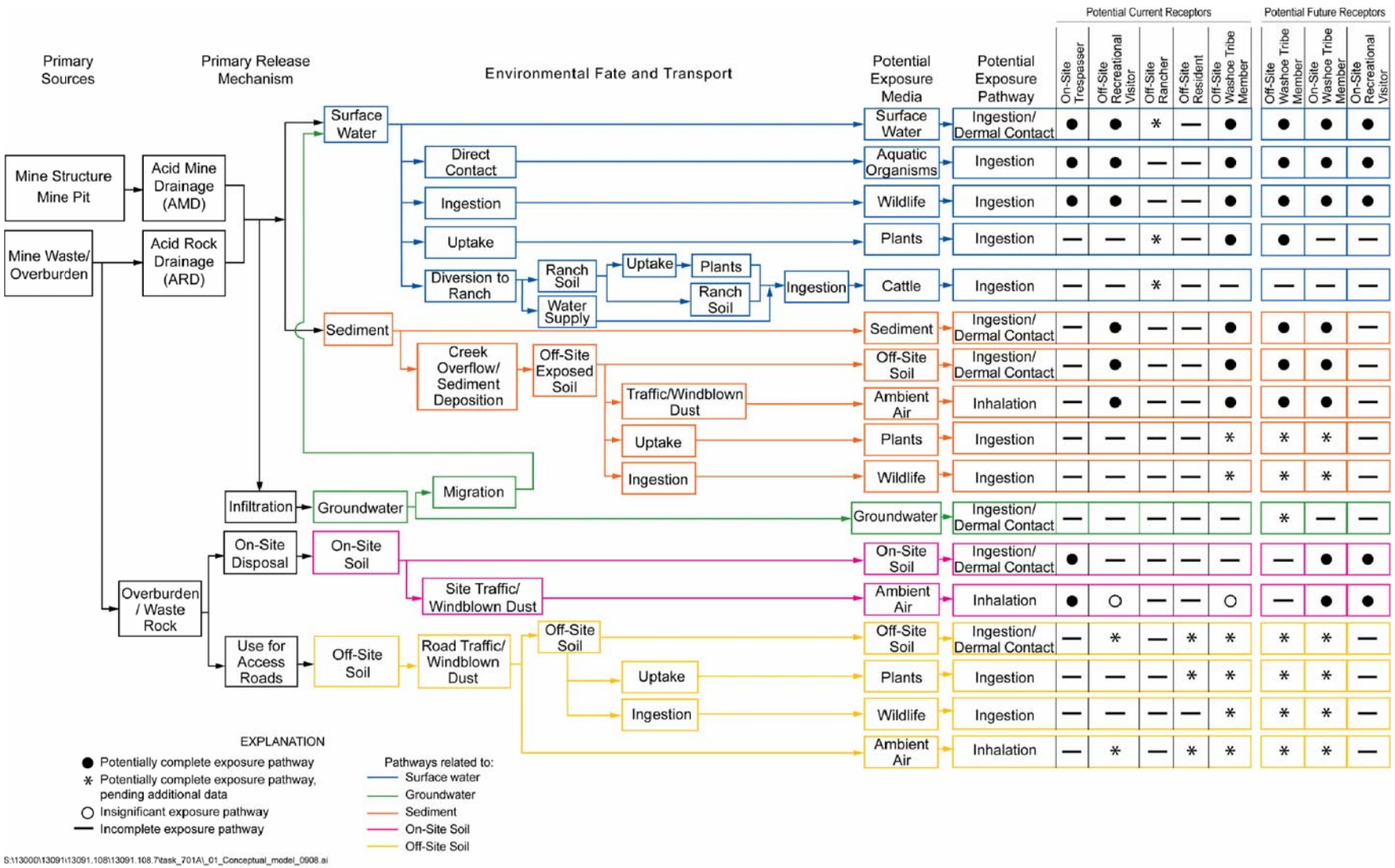

HUMAN HEALTH RISK CONCEPTUAL SITE MODEL

Leviathan Mine Site

Alpine County, California

By: dpv	Date: 10/21/08	Project No. 13091.108
AMEC Geomatrix		Figure 26

Plot Date: 10/21/08 - 1:10pm, Plotted by: donna.valasek
Drawing Path: P:\Project\13000s\13091 Leviathan\CAD\DQO\, Drawing Name: Fig 26_HHR Concept Site Model_rev.dwg

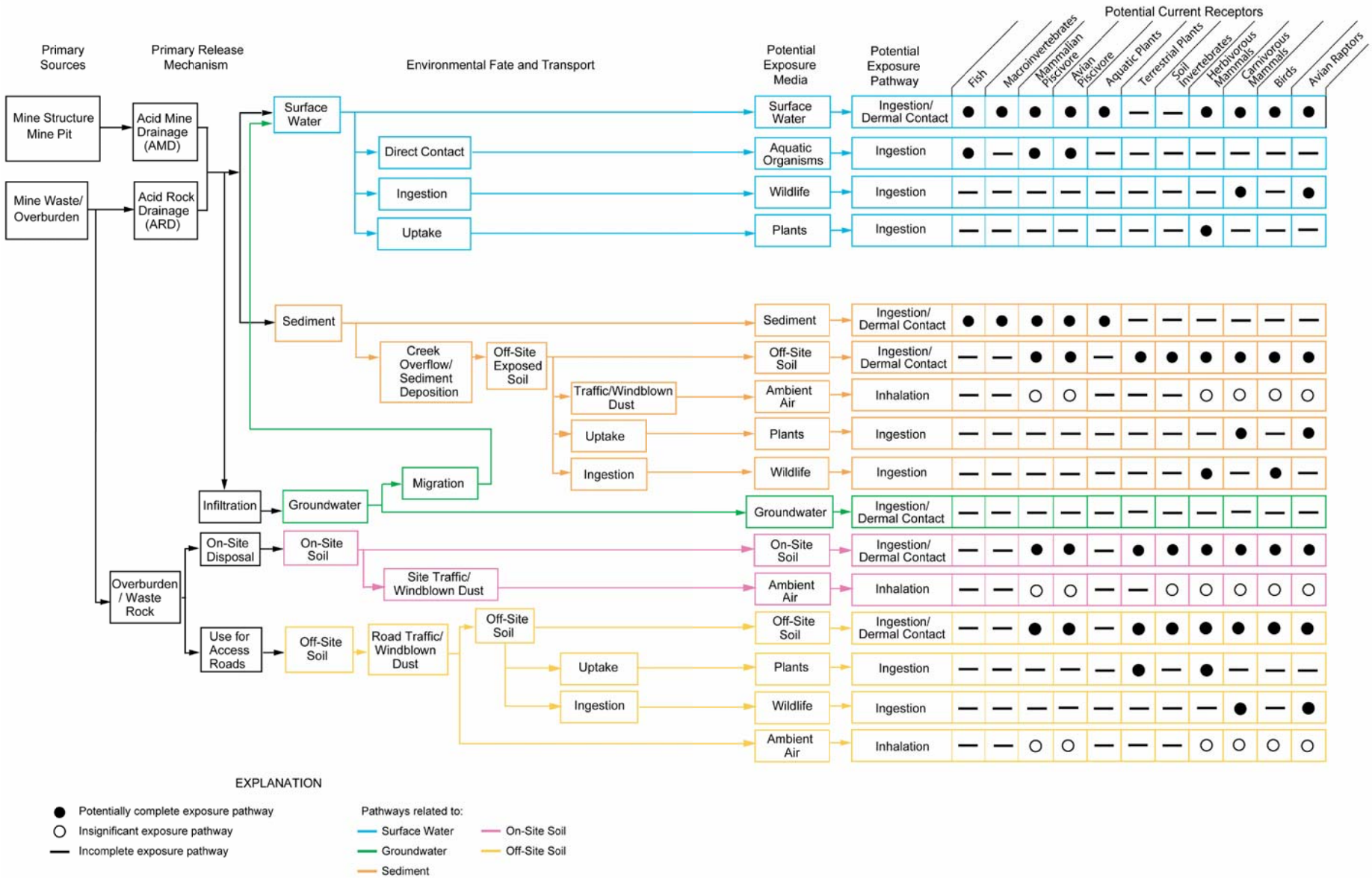

ECOLOGICAL RISK CONCEPTUAL SITE MODEL

Leviathan Mine Site

Alpine County, California

By: dpv	Date: 10/21/08	Project No. 13091.108
AMEC Geomatrix		Figure 27

Plot Date: 10/21/08 - 10:00am, Plotted by: donna.valasek
Drawing Path: P:\Project\13000s\13091 Leviathan\CAD\DQO\, Drawing Name: Fig 27_Eco Risk Concept Site Model.dwg