HiPOx® Technology Laboratory Test Report

Report:

P1190

Rev: Original

Site:

pCBSA Reduction and Bromate Control for Groundwater Remediation

Torrance, CA

Prepared for:

Hargis + Associates, Inc.

Mission City Corporate Center.

2365 Northside Drive, Suite C-100

San Diego, CA 92108

Report Author(s): B. Srikanth, C. Loll, K. Robinson

Report Date: September 1, 2009

APPLIED PROCESS TECHNOLOGY, INC.
3329 Vincent Road
Pleasant Hill, CA 94523
Phone: (925) 977-1811; Fax: (925) 977-1818
www.aptwater.com

TABLE OF CONTENTS

1.0 BACKGROUND INFORMATION **1**

1.1 HiPOx Technology 1
1.2 Project Specific Information 1
1.3 Objective of Evaluation 1
1.4 Process Water Information 1

2.0 TEST EQUIPMENT AND PROCEDURES **2**

2.1 Test Equipment Description 2
2.2 Test Procedures 2

3.0 RESULTS **3**

4.0 DISCUSSION **3**

4.1 Raw Water Quality 3
4.2 Testing Results 3
4.3 HiPOx Dosing Projections for Full-Scale System 3
4.4 Recommendations 3

5.0 ATTACHMENTS **4**

1.0 BACKGROUND INFORMATION

1.1 HiPOx Technology

The HiPOx process developed by Applied Process Technology, Inc. (Applied) is an ozone-based plug flow reactor technology that can be used as either an advanced oxidation reactor or a highly efficient ozone dissolution/contacting system. In the advanced oxidation mode, HiPOx maximizes the production of hydroxyl radicals (the most powerful oxidant available for water treatment) with highly efficient injection and mixing of ozone and hydrogen peroxide while minimizing bromate formation. In the ozone only mode, HiPOx maximizes the benefits of ozone with high mass transfer efficiency to ensure ozone is not wasted and reacts completely with the water. HiPOx can be operated in either advanced oxidation or ozone only modes as needed.

HiPOx has many water treatment applications. HiPOx has proven to be a very effective process for destroying organic micropollutants for groundwater remediation, drinking water wellhead treatment, and industrial wastewater treatment. It is well-known that ozone is very beneficial for taste and odor, color, enhanced clarification, disinfection byproduct precursor removal, and disinfection for drinking water surface water treatment. Ozone is also an emerging technology for wastewater treatment and water reuse with respect to micropollutants, endocrine disrupting compounds (EDCs), and personal and pharmaceutical care products. HiPOx has received conditional acceptance for disinfection of tertiary filtered wastewater for unrestricted water reuse under the requirements of Title 22 in the state of California.

HiPOx may also be integrated with other treatment technologies such as air stripping, metals removal, filtration, activated carbon, UV, and chlorine to provide a multiple treatment barrier and low cost water treatment solution.

1.2 Project Specific Information

The following is background information regarding this project:

- The proposed treatment system includes solid filtration (bag filters), arsenic removal, HiPOx system, and carbon beds prior to reinjection;
- The treatment objectives for the HiPOx system are to reduce pCBSA from 40,000 ug/l to less than 25,000 ug/l while maintaining bromate formation below 10 ug/l (Federal MCL).
- Previous site testing with HiPOx projected that an ozone dose of approximately 22 mg/l was needed to reduce pCBSA from 40,000 ug/l to less than 25,000 ug/l.
- Bromate control has not been previously evaluated.

1.3 Objective of Evaluation

The primary goals of this evaluation were to determine the following information:

- Feasibility of bromate control for the sample water matrix;
- Dose-response curve for pCBSA destruction and bromate formation as a function of hydrogen peroxide:ozone mole ratio and number of injection points;
- Dose-response curve for pCBSA destruction and bromate formation as a function of ozone dose;
- Projected full-scale conditions for satisfying the treatment objectives.

1.4 Process Water Information

Untreated water collected from the Site was collected by Hargis/Geosyntec, blended by Test America, and shipped to Applied's Pleasant Hill facility on the morning of August 7, 2009. The bench test was conducted on August 7, 2009.

2.0 TEST EQUIPMENT AND PROCEDURES

2.1 Test Equipment Description

The HiPOx lab-test reactor arrangement is shown in Figure 1.

Figure 1: HiPOx Lab-Test Reactor

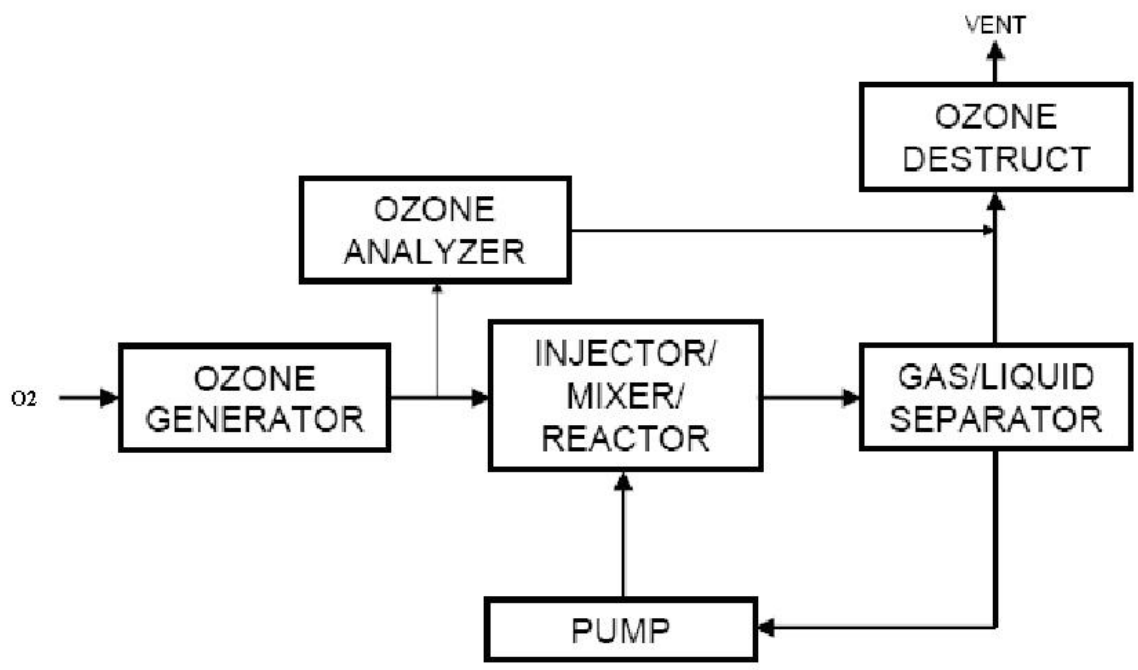

Applied's semi-continuous bench-scale test unit includes an ozone generator, ozone analyzer, ozone injector, static mixer, tubular reactor, recirculation pump, gas-liquid separator and thermo-catalytic ozone destruct unit. Reactor and piping materials of construction are Schedule-40 clear PVC. Oxygen or ozone tubing/piping is 316L stainless steel or PFA (Teflon™[1]). The ozone generator is an ASTeX Model 8200. The ozone analyzer is an INUSA Model H1-X. The ozone destruct unit is an INUSA part number 810-0062-01. The mixer is a ½", four-element, Kenics KMA static mixer insert.

2.2 Test Procedures

Experimental and equipment settings are calculated and listed in the attached table of Lab-Test Conditions (**ATTACHMENT 1**).

Pre-Test Preparation: Prior to conducting the test, the ozone destruct unit is turned on and preheated for ten (10) minutes. The flow of oxygen through the ozone generator is adjusted using the oxygen rotameter and the generator pressure is adjusted using the backpressure regulator. The ozone analyzer is zeroed using pure oxygen prior to turning on the ozone generator. The lab-test unit (hereinafter referred to as "reactor") is charged with 1.8 liters of distilled water prior to the first run. The ozone generator and the reactor are then operated at maximum dosing conditions for 15-20 minutes to both clean the reactor and to set/adjust equipment parameters. Following completion of the pre-test operation, the reactor is drained and rinsed with an additional 2.0 liters of distilled water.

The selected test ozone doses were 16.5, 22, 27.5 mg/l as shown in **ATTACHMENT 1.** Hydrogen peroxide: ozone mole ratios (MR) of 0.7, 1.7, and 3.1 were used.

Sample Preparation: The water was spiked with bromide with the intention of attaining concentrations of 500 and 550 ug/l. For each run, a graduated cylinder is filled to 1.8 liters with untreated sample. The entire contents of the graduated cylinder are charged to the reactor. Hydrogen peroxide is added to the contents of the reactor before ozone injection.

Test Operation: For each run, the pump is started, and air is purged from the reactor as the water is re-circulated and mixed for a brief period. The water rotameter is set to 3 gallons/minute. With the ozone generator venting to the ozone destruct unit, the generator power dial is set to achieve the ozone concentration listed in the Lab-Test Conditions table as measured by the ozone analyzer. When the ozone concentration has stabilized, the generator output is directed to the reactor. After the appropriate amount of ozone (dose) has been added to the reactor, the generator output is re-directed to the ozone destruct and samples were collected for dissolved ozone residual and/or hydrogen peroxide residual and the reactor subsequently drained.

Sample Collection: A sample of water was collected at Applied's testing facility upon receipt and prior to treatment. pH, Alkalinity, Turbidity, and Temperature were measured and recorded for the untreated water. Samples of the untreated water were collected for COD, TOC, General Minerals, pCBSA, chlorobenzene, VOCs, bromide, and bromate. After each test run, samples were immediately measured and recorded by Applied for dissolved ozone residual, dissolved hydrogen peroxide residual, pH, Alkalinity, Turbidity, and Temperature. After each test run, samples were collected for pCBSA, chlorobenzene, VOCs, bromide, and bromate. The samples were packaged properly in coolers preserved with blue ice and including chain-of-custody forms. Coolers were shipped to analytical laboratories designated by the customer.

Analyses: All analyses (except for bromide and bromate) were performed by Test America located at 17461 Derian Avenue, Suite 100, Irvine, CA 92614. Bromide and bromate analyses were performed by MWH Labs located at 750 Royal Oak Drive, Suite 100, Monrovia, CA 91016. Analytical results for both treated and untreated samples were provided to Applied.

Applied's laboratory measurements were performed with the following equipment: The turbidity meter used was an Orbeco-Hellige Model 965-10 Serial # 2222. The pH was measured with an Oakton Model Ph Tester 3^{+}. Alkalinity was measured using a Hach Model 5-EP test kit. Ozone residual was measured using a Hach Model Ozone AccuVac test kit. Hydrogen Peroxide residual was measured using a Hach Model HYP-1 test kit.

[1] Trademark of the Dupont Company.

3.0 RESULTS

Analytical results of the test are summarized in **ATTACHMENT 2**. Dose response figures for 1,4-Dioxane removal are presented in **ATTACHMENT 3.** All supporting third party analytical data reporting is provided in **ATTACHMENT 4**.

4.0 DISCUSSION

4.1 Raw Water Quality

A summary of the analytical results for the untreated water are presented in **ATTACHMENT 2.** The historical site average concentration, the projected blended sample influent concentration, and the actual sample concentration are shown in the table below:

Analyte	Unit	Historical Site Average[1]	Projected Blended Sample Influent[2]	Actual Sample Influent[3]
pH		7.7	NS	7.1
Alkalinity	mg/l as CaCO3	270	245	260
Hardness	mg/l as CaCO3	495	NS	420
COD	mg/l	92.8	77	67
TOC	mg/l	21.9	24	20
TDS	mg/l	909	880	850
Bromide	ug/l	431	468	430/490
pCBSA	ug/l	39628	49667	50000
Chlorobenzene	ug/l	13900	12300	3100

Notes:
1. Information supplied by Hargis: TGRS Influent Concentrations as of 7/16/09 (flow weighted influent concentrations)
2. Information supplied by Hargis: Projected blend from 50/50 mix of diluted BF-OW-03 and undiluted BF-11
3. Water collected by Applied and samped prior to HiPOx bench testing.

The COD and chlorobenzene concentration were slightly lower than anticipated for the blended sample, and lower than the historical site average concentration. The pCBSA concentration was higher than the historical site average concentration. Bromide levels were similar to the historical site average concentration. Note: the reported bromide values for the actual sample were taken after spiking. While the goal was to spike to values of 500 and 550 ug/l, the actual values were slightly lower. This may be due to the projected blended sample influent bromide concentration being lower than anticipated.

4.2 Testing Results

ATTACHMENT 2 summarizes the analytical results for all samples and test runs. **ATTACHMENT 3** displays a graphical depiction of bromate formation in the form of a dose-response figure. **ATTACHMENT 4** displays a graphical depiction of bromate formation and pCBSA destruction in the form of a dose-response figure. **ATTACHMENT 5** includes the third-party laboratory reports for all analytical data.

HiPOx was effective at maintaining bromate formation below 10 ug/l for ALL test runs. As shown in **ATTACHMENT 3,** bromate control improved with increasing MR, but the effect was subtle. Also, increasing the number of ozone injectors from 10 to 20 also improved bromate control in a subtle manner. When the bromide concentration increased from 430 ug/l to 490 ug/l, the bromate formation increased by approximately 20% but remained below the MCL.

The projected ozone dose of 22 mg/l was effective at providing pCBSA effluent concentrations near or below the treatment target of 25,000 ug/l for most test runs. However, the influent level of 50,000 ug/l during the test was much higher than the anticipated full-scale design conditions of 40,000 ug/l. Therefore, HiPOx exceeded the projected removal efficiency of pCBSA at the ozone dose of 22 mg/l.

4.3 HiPOx Dosing Projections for Full-Scale System

A destruction model was generated within the limitations of the data to project ozone and hydrogen peroxide dosing levels to meet the treatment objectives for full-scale design.

Analyte	Bench-Scale Model	Full-Scale Model
COD (mg/l)	67	92
pCBSA, influent (ug/l)	40000	40000
pCBSA, effluent (ug/l)	25000	25000
% pCBSA reduction	38%	38%
bromide, influent (ug/l)	430-490	430-490
bromate, effluent (ug/l)	<10	<10
projected ozone dose (mg/l)	14.1	21.5
projected hydrogen peroxide:ozone mole ratio	0.7	0.7
projected hydrogen peroxide dose (mg/l)	7.0	10.7
number of injectors	10	10

Note: Projected ozone dose for full-scale model corrected for higher COD.

4.4 Recommendations

The lab testing results demonstrate that HiPOx operated in the AOP mode is successful at reducing pCBSA to the treatment target while maintaining bromate concentrations below the MCL. Based on modeled projections using interpolation to the influent design criteria and corrections for the differences in COD levels, the full-scale HiPOx system should be designed to meet the performance objectives with a design ozone dose of 22 mg/l, a MR of 0.7, and 10 injector reactor configuration. The full-scale HiPOx system should have the capability to use higher MRs for additional bromate control, if needed.

End of Report

5.0 ATTACHMENTS

ATTACHMENT 1	Test Conditions
ATTACHMENT 2	Results
ATTACHMENT 3	Bromate Formation Figure
ATTACHMENT 4	Ozone-Dose Response Figure
ATTACHMENT 5	Third Party Analytical Data

ATTACHMENT 1
HIPOX BENCH TEST CONDITIONS

Lab Analytical Run Sheet

Sample ID #	Run #	Ozone Dose (ppm)	H2O2:O3 Mole Ratio	pH	Alk	Turb	Temp	O3 Residual	H2O2 Residual	H2O2 Residual	TOC	COD	General Minerals	Hardness	pCBSA	VOCs	Bromide	Bromate
				Applied	Applied	Applied	Applied	Applied	Applied	Applied	Test America	Test America	Test America	Test America	Test America	Test America	MWH Labs	MWH Labs
				Oakton Model pH Tester 3+	Hach Model 5-EP Test Kit	Orbeco-Hellige Model 965-10	Therm	Hach Model Ozone AccuVac Test Kit	Hach Test Kit	Test Strips	SM5310B	SM5220D		SM2340C	EPA 314.0 M	EPA 8260B	EPA 300.0	EPA 317
											(1) x 250 ml amber w/HCl	(1) x 500 ml poly w/H2SO4	(1) x 1000 ml poly plus (1) x 500 ml poly	(1) x 500 ml poly w/HNO3	(1) x 500 ml poly	(3) x 40 ml VOA w/HCL	(1) x 60 ml poly w/EDA	
P1190-SP-0A-500	---	---	---	1	1	1	1				1	1	1	1	1	1	1	0
P1190-SP-0B-550	---	---	---	1	1	1	1										1	0
P1190-SP-1-500	1	22.0	0.70	1	1	1	1	1	1	1					1	1	1	1
P1190-SP-2-500	2	22.0	1.70	1	1	1	1	1	1	1					1	1	1	1
P1190-SP-3-500	3	22.0	3.10	1	1	1	1	1	1	1					1	1	1	1
P1190-SP-4-500	4	22.0	0.70	1	1	1	1	1	1	1					1	1	1	1
P1190-SP-5-500	5	22.0	1.70	1	1	1	1	1	1	1					1	1	1	1
P1190-SP-6-500	6	22.0	3.10	1	1	1	1	1	1	1					1	1	1	1
P1190-SP-7-500	7	16.5	1.70	1	1	1	1	1	1	1					1	1	1	1
P1190-SP-8-500	8	27.5	1.70	1	1	1	1	1	1	1					1	1	1	1
P1190-SP-9-550	9	22.0	1.70	1	1	1	1	1	1	1					1	1	1	1
P1190-SP-10-550	10	22.0	3.10	1	1	1	1	1	1	1					1	1	1	1
P1190-SP-11-550	11	22.0	1.70	1	1	1	1	1	1	1					1	1	1	1
P1190-SP-12-550	12	22.0	3.10	1	1	1	1	1	1	1					1	1	1	1

Applied Process Technology Inc.
Confidential Infromation

ATTACHMENT 2
HIPOX BENCH TEST RESULTS

Lab Analytical Run Sheet																		
Sample ID #	Run #	Ozone Dose (ppm)	H2O2:O3 Mole Ratio	pH	Alk	Turb	Temp	O3 Residual	H2O2 Residual	H2O2 Residual	TOC	COD	General Minerals	Hardness	pCBSA	Chlorobenzene	Bromide	Bromate
				Applied	Applied	Applied	Applied	Applied	Applied	Applied	Test America	Test America	Test America	Test America	Test America	Test America	MWH Labs	MWH Labs
				Model pH	Model 5-EP Test	Hellige Model	Therm	Ozone AccuVac Test Kit	Hach Test Kit	Test Strips	SM5310B	SM5220D		SM2340C	EPA 314.0 M	EPA 8260B	EPA 300.0	EPA 317
P1190-SP-0A-500	---	---	---	7.1	280	4.5					20	67	see below	see below	50000	3100	430	NS
P1190-SP-0B-550	---	---	---	7.0	260	5.9									NS	NS	490	NS
P1190-SP-1-500	1	22.0	0.70	6.7	260	4.5	20.9	0.3	10	10					24000	390	420	5.6
P1190-SP-2-500	2	22.0	1.70	6.9	280	4.4	19.8	0.0	27	25					24000	300	400	5.0
P1190-SP-3-500	3	22.0	3.10	6.9	260	4.3	20.2	0.4	49	30					23000	770	430	4.1
P1190-SP-4-500	4	22.0	0.70	6.7	260	4.2	21.4	0.4	10	7					26000	710	420	4.6
P1190-SP-5-500	5	22.0	1.70	7.0	240	4.2	21.8	0.0	27	20					26000	650	420	4.5
P1190-SP-6-500	6	22.0	3.10	6.9	260	4.9	22.1	0.5	46	30					26000	530	420	4.2
P1190-SP-7-500	7	16.5	1.70	6.9	260	5.0	21.5	0.0	18	20					29000	640	440	5.4
P1190-SP-8-500	8	27.5	1.70	6.9	260	5.8	21.9	0.2	27	20					20000	320	410	6.0
P1190-SP-9-550	9	22.0	1.70	6.9	280	5.4	22.2	0.4	25	20					24000	500	520	6.1
P1190-SP-10-550	10	22.0	3.10	6.7	280	5.1	22.0	0.0	48	30					23000	570	470	4.9
P1190-SP-11-550	11	22.0	1.70	6.9	260	5.3	22.9	0.0	26	20					26000	650	480	5.3
P1190-SP-12-550	12	22.0	3.10	6.8	260	6.4	23.3	0.3	49	30					26000	600	470	4.6

General Minerals	Iron	ND (0.040)	mg/l	EPA 6010B-Diss
	Magnesium	39	mg/l	EPA 6010B-Diss
	Manganese	0.15	mg/l	EPA 6010B-Diss
	Calcium	110	mg/l	EPA 6010B-Diss
	TDS	850	mg/l	SM2540C
	Alkalinity	260	mg/l as CaCO3	SM2320B
	Sulfate	160	mg/l	EPA 300.0
	Hardness	420	mg/l as CaCO3	SM2340C

ATTACHMENT 3

Bromate Formation vs. H2O2:O3 Mole Ratio

as a function of the number of injectors and the influent bromide concentration with applied ozone dose of 22 mg/l

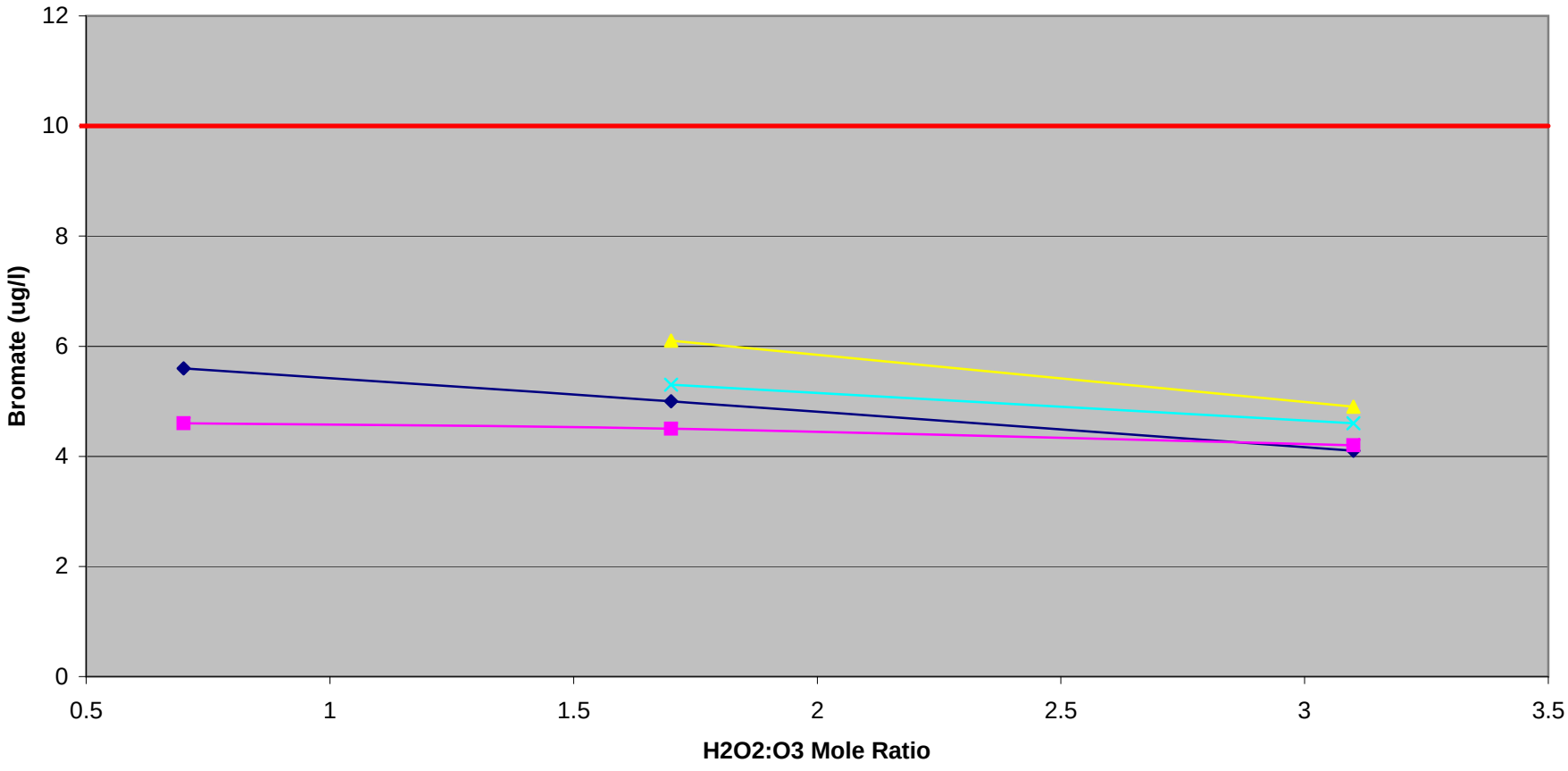

pH = 7.1
Alkalinity = 280 mg/l as CaCO3
TOC = 20 mg/l
COD =67 mg/l

- O3 Dose = 22 mg/l, # of Injectors = 10, Bromide = 430 ug/l
- O3 Dose = 22 mg/l, # of Injectors = 20, Bromide = 430 ug/l
- O3 Dose = 22 mg/l, # of Injectors = 10, Bromide = 490 ug/l
- O3 Dose = 22 mg/l, # of Injectors = 20, Bromide = 490 ug/l
- Bromate MCL = 10 ug/l

ATTACHMENT 4

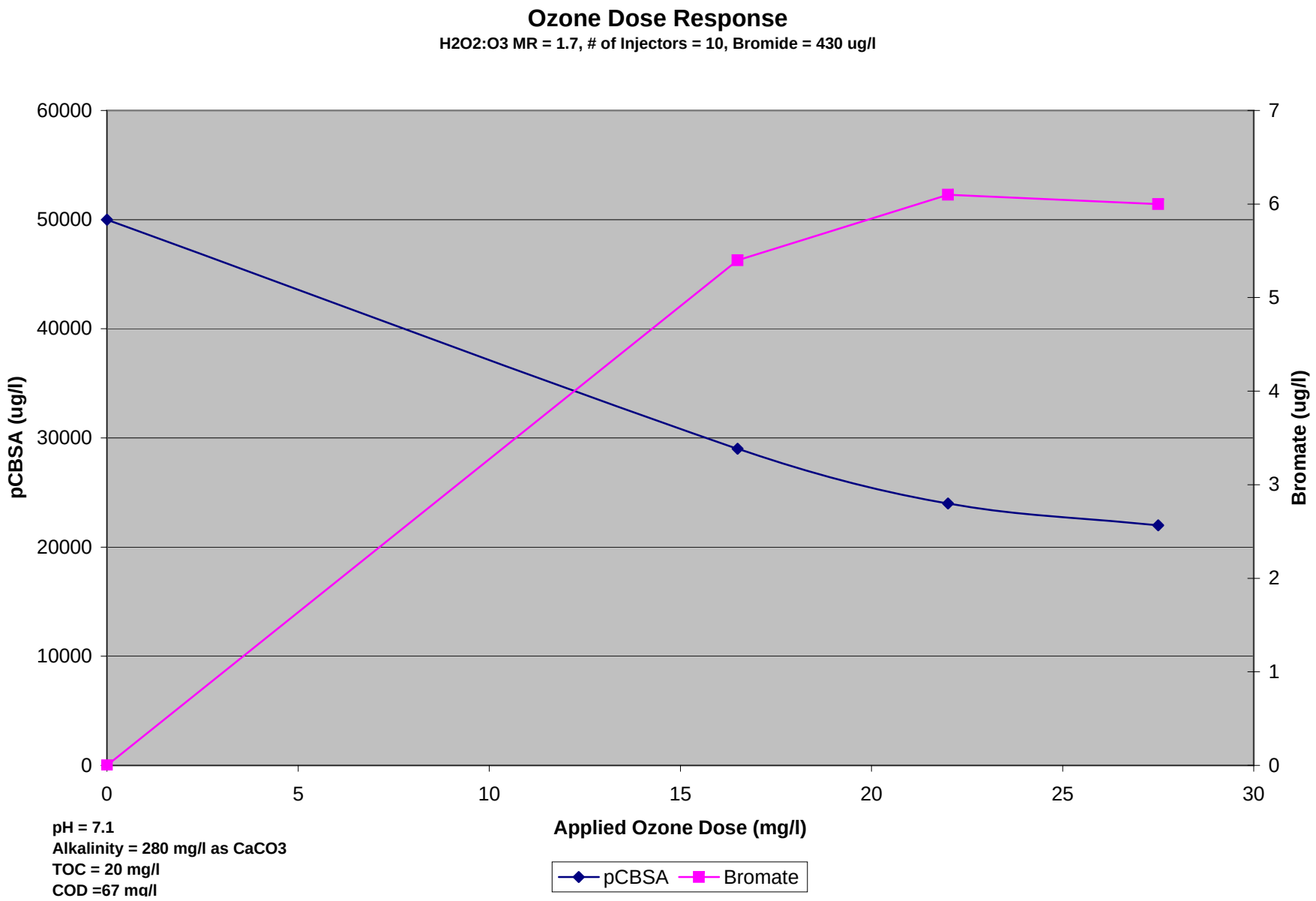

pH = 7.1
Alkalinity = 280 mg/l as CaCO3
TOC = 20 mg/l
COD =67 mg/l

Applied Process Technology, Inc.
Confidential Information

TestAmerica
THE LEADER IN ENVIRONMENTAL TESTING

17461 Derian Avenue. Suite 100, Irvine, CA 92614 (949) 261-1022 Fax:(949) 260-3297

LABORATORY REPORT

Prepared For: Applied Process Technology
3333 Vincent Road, Suite 222
Pleasant Hill, CA 94523
Attention: Keel Robinson

Project: Montrose-Torrance Bench Study
P1190

Sampled: 08/07/09
Received: 08/08/09
Issued: 08/19/09 14:17

NELAP #01108CA California ELAP#2706 CSDLAC #10256 AZ #AZ0671 NV #CA01531

The results listed within this Laboratory Report pertain only to the samples tested in the laboratory. The analyses contained in this report were performed in accordance with the applicable certifications as noted. All soil samples are reported on a wet weight basis unless otherwise noted in the report. This Laboratory Report is confidential and is intended for the sole use of TestAmerica and its client. This report shall not be reproduced, except in full, without written permission from TestAmerica. The Chain of Custody, 1 page, is included and is an integral part of this report.
This entire report was reviewed and approved for release.

SAMPLE CROSS REFERENCE

LABORATORY ID	CLIENT ID	MATRIX
ISH0701-01	P1190-SP-OA-500	Water
ISH0701-02	P1190-SP-1-500	Water
ISH0701-03	P1190-SP-2-500	Water
ISH0701-04	P1190-SP-3-500	Water
ISH0701-05	P1190-SP-4-500	Water
ISH0701-06	P1190-SP-5-500	Water
ISH0701-07	P1190-SP-6-500	Water
ISH0701-08	P1190-SP-7-500	Water
ISH0701-09	P1190-SP-8-550	Water
ISH0701-10	P1190-SP-9-550	Water
ISH0701-11	P1190-SP-10-550	Water
ISH0701-12	P1190-SP-11-550	Water
ISH0701-13	P1190-SP-12-550	Water

Reviewed By:

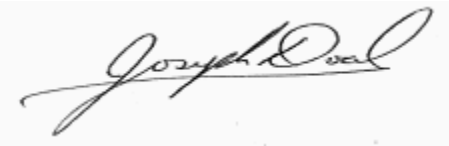

TestAmerica Irvine

Joseph Doak
Project Manager

TestAmerica
THE LEADER IN ENVIRONMENTAL TESTING

17461 Derian Avenue. Suite 100, Irvine, CA 92614 (949) 261-1022 Fax:(949) 260-3297

Applied Process Technology
3333 Vincent Road, Suite 222
Pleasant Hill, CA 94523
Attention: Keel Robinson

Project ID: Montrose-Torrance Bench Study
P1190
Report Number: ISH0701

Sampled: 08/07/09
Received: 08/08/09

VOLATILE ORGANICS by GC/MS (EPA 5030B/8260B)

Analyte	Method	Batch	MDL Limit	Reporting Limit	Sample Result	Dilution Factor	Date Extracted	Date Analyzed	Data Qualifiers
Sample ID: ISH0701-01 (P1190-SP-OA-500 - Water)					**Sampled: 08/07/09**				
Reporting Units: ug/l									
Chlorobenzene	EPA 8260B	9H12030	18	100	**3100**	50	08/12/09	08/12/09	
Surrogate: 4-Bromofluorobenzene (80-120%)					*94 %*				
Surrogate: Dibromofluoromethane (80-120%)					*105 %*				
Surrogate: Toluene-d8 (80-120%)					*106 %*				
Sample ID: ISH0701-01RE1 (P1190-SP-OA-500 - Water)					**Sampled: 08/07/09**				
Reporting Units: ug/l									
Acetone	EPA 8260B	9H12030	45	100	ND	10	08/12/09	08/12/09	
Benzene	EPA 8260B	9H12030	2.8	20	**8.0**	10	08/12/09	08/12/09	J
Bromobenzene	EPA 8260B	9H12030	2.7	50	ND	10	08/12/09	08/12/09	
Bromochloromethane	EPA 8260B	9H12030	4.0	50	ND	10	08/12/09	08/12/09	
Bromodichloromethane	EPA 8260B	9H12030	3.0	20	ND	10	08/12/09	08/12/09	
Bromoform	EPA 8260B	9H12030	4.0	50	ND	10	08/12/09	08/12/09	
Bromomethane	EPA 8260B	9H12030	4.2	50	ND	10	08/12/09	08/12/09	
2-Butanone (MEK)	EPA 8260B	9H12030	47	100	ND	10	08/12/09	08/12/09	
n-Butylbenzene	EPA 8260B	9H12030	3.7	50	ND	10	08/12/09	08/12/09	
sec-Butylbenzene	EPA 8260B	9H12030	2.5	50	ND	10	08/12/09	08/12/09	
tert-Butylbenzene	EPA 8260B	9H12030	2.2	50	ND	10	08/12/09	08/12/09	
Carbon Disulfide	EPA 8260B	9H12030	4.8	10	ND	10	08/12/09	08/12/09	
Carbon tetrachloride	EPA 8260B	9H12030	2.8	5.0	ND	10	08/12/09	08/12/09	
Chloroethane	EPA 8260B	9H12030	4.0	50	ND	10	08/12/09	08/12/09	
Chloroform	EPA 8260B	9H12030	3.3	20	ND	10	08/12/09	08/12/09	
Chloromethane	EPA 8260B	9H12030	4.0	15	ND	10	08/12/09	08/12/09	
2-Chlorotoluene	EPA 8260B	9H12030	2.8	50	ND	10	08/12/09	08/12/09	
4-Chlorotoluene	EPA 8260B	9H12030	2.9	50	ND	10	08/12/09	08/12/09	
1,2-Dibromo-3-chloropropane	EPA 8260B	9H12030	9.7	50	ND	10	08/12/09	08/12/09	
Dibromochloromethane	EPA 8260B	9H12030	4.0	20	ND	10	08/12/09	08/12/09	
1,2-Dibromoethane (EDB)	EPA 8260B	9H12030	4.0	20	ND	10	08/12/09	08/12/09	
Dibromomethane	EPA 8260B	9H12030	3.6	20	ND	10	08/12/09	08/12/09	
1,2-Dichlorobenzene	EPA 8260B	9H12030	3.2	20	ND	10	08/12/09	08/12/09	
1,3-Dichlorobenzene	EPA 8260B	9H12030	3.5	20	ND	10	08/12/09	08/12/09	
1,4-Dichlorobenzene	EPA 8260B	9H12030	3.7	20	ND	10	08/12/09	08/12/09	
Dichlorodifluoromethane	EPA 8260B	9H12030	2.6	50	ND	10	08/12/09	08/12/09	
1,1-Dichloroethane	EPA 8260B	9H12030	4.0	20	ND	10	08/12/09	08/12/09	
1,2-Dichloroethane	EPA 8260B	9H12030	2.8	5.0	ND	10	08/12/09	08/12/09	
1,1-Dichloroethene	EPA 8260B	9H12030	4.2	50	ND	10	08/12/09	08/12/09	
cis-1,2-Dichloroethene	EPA 8260B	9H12030	3.2	20	ND	10	08/12/09	08/12/09	
trans-1,2-Dichloroethene	EPA 8260B	9H12030	3.0	20	ND	10	08/12/09	08/12/09	
1,2-Dichloropropane	EPA 8260B	9H12030	3.5	20	ND	10	08/12/09	08/12/09	
1,3-Dichloropropane	EPA 8260B	9H12030	3.2	20	ND	10	08/12/09	08/12/09	
2,2-Dichloropropane	EPA 8260B	9H12030	3.4	20	ND	10	08/12/09	08/12/09	

TestAmerica Irvine

Joseph Doak
Project Manager

The results pertain only to the samples tested in the laboratory. This report shall not be reproduced, except in full, without written permission from TestAmerica.

TestAmerica
THE LEADER IN ENVIRONMENTAL TESTING

17461 Derian Avenue. Suite 100, Irvine, CA 92614 (949) 261-1022 Fax:(949) 260-3297

Applied Process Technology
3333 Vincent Road, Suite 222
Pleasant Hill, CA 94523
Attention: Keel Robinson

Project ID: Montrose-Torrance Bench Study
P1190
Report Number: ISH0701

Sampled: 08/07/09
Received: 08/08/09

VOLATILE ORGANICS by GC/MS (EPA 5030B/8260B)

Analyte	Method	Batch	MDL Limit	Reporting Limit	Sample Result	Dilution Factor	Date Extracted	Date Analyzed	Data Qualifiers
Sample ID: ISH0701-01RE1 (P1190-SP-OA-500 - Water) - cont.					**Sampled: 08/07/09**				
Reporting Units: ug/l									
cis-1,3-Dichloropropene	EPA 8260B	9H12030	2.2	20	ND	10	08/12/09	08/12/09	
trans-1,3-Dichloropropene	EPA 8260B	9H12030	3.2	20	ND	10	08/12/09	08/12/09	
1,1-Dichloropropene	EPA 8260B	9H12030	2.8	20	ND	10	08/12/09	08/12/09	
1,2-Dichloro-1,1,2-trifluoroethane	EPA 8260B	9H12030	11	20	ND	10	08/12/09	08/12/09	
Ethylbenzene	EPA 8260B	9H12030	2.5	20	ND	10	08/12/09	08/12/09	
Hexachlorobutadiene	EPA 8260B	9H12030	3.8	50	ND	10	08/12/09	08/12/09	
2-Hexanone	EPA 8260B	9H12030	26	100	ND	10	08/12/09	08/12/09	
Isopropylbenzene	EPA 8260B	9H12030	2.5	20	ND	10	08/12/09	08/12/09	
p-Isopropyltoluene	EPA 8260B	9H12030	2.8	20	ND	10	08/12/09	08/12/09	
4-Methyl-2-pentanone (MIBK)	EPA 8260B	9H12030	35	100	ND	10	08/12/09	08/12/09	
Methylene chloride	EPA 8260B	9H12030	9.5	50	ND	10	08/12/09	08/12/09	
Naphthalene	EPA 8260B	9H12030	4.1	50	ND	10	08/12/09	08/12/09	
n-Propylbenzene	EPA 8260B	9H12030	2.7	20	ND	10	08/12/09	08/12/09	
Styrene	EPA 8260B	9H12030	2.0	20	ND	10	08/12/09	08/12/09	
1,1,1,2-Tetrachloroethane	EPA 8260B	9H12030	2.7	50	ND	10	08/12/09	08/12/09	
1,1,2,2-Tetrachloroethane	EPA 8260B	9H12030	3.0	10	ND	10	08/12/09	08/12/09	
Tetrachloroethene	EPA 8260B	9H12030	3.2	20	ND	10	08/12/09	08/12/09	
Toluene	EPA 8260B	9H12030	3.6	20	ND	10	08/12/09	08/12/09	
1,2,3-Trichlorobenzene	EPA 8260B	9H12030	3.0	50	ND	10	08/12/09	08/12/09	
1,2,4-Trichlorobenzene	EPA 8260B	9H12030	4.8	50	ND	10	08/12/09	08/12/09	
1,1,1-Trichloroethane	EPA 8260B	9H12030	3.0	20	ND	10	08/12/09	08/12/09	
1,1,2-Trichloroethane	EPA 8260B	9H12030	3.0	20	ND	10	08/12/09	08/12/09	
Trichloroethene	EPA 8260B	9H12030	2.6	20	ND	10	08/12/09	08/12/09	
Trichlorofluoromethane	EPA 8260B	9H12030	3.4	50	ND	10	08/12/09	08/12/09	
1,2,3-Trichloropropane	EPA 8260B	9H12030	4.0	100	ND	10	08/12/09	08/12/09	
1,2,4-Trimethylbenzene	EPA 8260B	9H12030	2.3	20	ND	10	08/12/09	08/12/09	
1,3,5-Trimethylbenzene	EPA 8260B	9H12030	2.6	20	ND	10	08/12/09	08/12/09	
Vinyl acetate	EPA 8260B	9H12030	10	50	ND	10	08/12/09	08/12/09	
Vinyl chloride	EPA 8260B	9H12030	4.0	5.0	ND	10	08/12/09	08/12/09	
m,p-Xylenes	EPA 8260B	9H12030	6.0	20	ND	10	08/12/09	08/12/09	
o-Xylene	EPA 8260B	9H12030	3.0	20	ND	10	08/12/09	08/12/09	
Xylenes, Total	EPA 8260B	9H12030	9.0	20	ND	10	08/12/09	08/12/09	
Surrogate: 4-Bromofluorobenzene (80-120%)					*100 %*				
Surrogate: Dibromofluoromethane (80-120%)					*100 %*				
Surrogate: Toluene-d8 (80-120%)					*107 %*				

TestAmerica Irvine

Joseph Doak
Project Manager

The results pertain only to the samples tested in the laboratory. This report shall not be reproduced, except in full, without written permission from TestAmerica.

TestAmerica
THE LEADER IN ENVIRONMENTAL TESTING

17461 Derian Avenue. Suite 100, Irvine, CA 92614 (949) 261-1022 Fax:(949) 260-3297

Applied Process Technology
3333 Vincent Road, Suite 222
Pleasant Hill, CA 94523
Attention: Keel Robinson

Project ID: Montrose-Torrance Bench Study
P1190
Report Number: ISH0701

Sampled: 08/07/09
Received: 08/08/09

VOLATILE ORGANICS by GC/MS (EPA 5030B/8260B)

Analyte	Method	Batch	MDL Limit	Reporting Limit	Sample Result	Dilution Factor	Date Extracted	Date Analyzed	Data Qualifiers
Sample ID: ISH0701-02 (P1190-SP-1-500 - Water)					**Sampled: 08/07/09**				
Reporting Units: ug/l									
Chlorobenzene	EPA 8260B	9H12030	3.6	20	**390**	10	08/12/09	08/12/09	
Surrogate: 4-Bromofluorobenzene (80-120%)					*94 %*				
Surrogate: Dibromofluoromethane (80-120%)					*104 %*				
Surrogate: Toluene-d8 (80-120%)					*107 %*				
Sample ID: ISH0701-02RE1 (P1190-SP-1-500 - Water)					**Sampled: 08/07/09**				
Reporting Units: ug/l									
Acetone	EPA 8260B	9H12030	9.0	20	**9.3**	2	08/12/09	08/12/09	J
Benzene	EPA 8260B	9H12030	0.56	4.0	**0.92**	2	08/12/09	08/12/09	J
Bromobenzene	EPA 8260B	9H12030	0.54	10	ND	2	08/12/09	08/12/09	
Bromochloromethane	EPA 8260B	9H12030	0.80	10	ND	2	08/12/09	08/12/09	
Bromodichloromethane	EPA 8260B	9H12030	0.60	4.0	ND	2	08/12/09	08/12/09	
Bromoform	EPA 8260B	9H12030	0.80	10	ND	2	08/12/09	08/12/09	
Bromomethane	EPA 8260B	9H12030	0.84	10	ND	2	08/12/09	08/12/09	
2-Butanone (MEK)	EPA 8260B	9H12030	9.4	20	ND	2	08/12/09	08/12/09	
n-Butylbenzene	EPA 8260B	9H12030	0.74	10	ND	2	08/12/09	08/12/09	
sec-Butylbenzene	EPA 8260B	9H12030	0.50	10	ND	2	08/12/09	08/12/09	
tert-Butylbenzene	EPA 8260B	9H12030	0.44	10	ND	2	08/12/09	08/12/09	
Carbon Disulfide	EPA 8260B	9H12030	0.96	2.0	ND	2	08/12/09	08/12/09	
Carbon tetrachloride	EPA 8260B	9H12030	0.56	1.0	ND	2	08/12/09	08/12/09	
Chloroethane	EPA 8260B	9H12030	0.80	10	ND	2	08/12/09	08/12/09	
Chloroform	EPA 8260B	9H12030	0.66	4.0	ND	2	08/12/09	08/12/09	
Chloromethane	EPA 8260B	9H12030	0.80	3.0	ND	2	08/12/09	08/12/09	
2-Chlorotoluene	EPA 8260B	9H12030	0.56	10	ND	2	08/12/09	08/12/09	
4-Chlorotoluene	EPA 8260B	9H12030	0.58	10	ND	2	08/12/09	08/12/09	
1,2-Dibromo-3-chloropropane	EPA 8260B	9H12030	1.9	10	ND	2	08/12/09	08/12/09	
Dibromochloromethane	EPA 8260B	9H12030	0.80	4.0	ND	2	08/12/09	08/12/09	
1,2-Dibromoethane (EDB)	EPA 8260B	9H12030	0.80	4.0	ND	2	08/12/09	08/12/09	
Dibromomethane	EPA 8260B	9H12030	0.72	4.0	ND	2	08/12/09	08/12/09	
1,2-Dichlorobenzene	EPA 8260B	9H12030	0.64	4.0	ND	2	08/12/09	08/12/09	
1,3-Dichlorobenzene	EPA 8260B	9H12030	0.70	4.0	ND	2	08/12/09	08/12/09	
1,4-Dichlorobenzene	EPA 8260B	9H12030	0.74	4.0	ND	2	08/12/09	08/12/09	
Dichlorodifluoromethane	EPA 8260B	9H12030	0.52	10	ND	2	08/12/09	08/12/09	
1,1-Dichloroethane	EPA 8260B	9H12030	0.80	4.0	ND	2	08/12/09	08/12/09	
1,2-Dichloroethane	EPA 8260B	9H12030	0.56	1.0	**1.6**	2	08/12/09	08/12/09	
1,1-Dichloroethene	EPA 8260B	9H12030	0.84	10	ND	2	08/12/09	08/12/09	
cis-1,2-Dichloroethene	EPA 8260B	9H12030	0.64	4.0	ND	2	08/12/09	08/12/09	
trans-1,2-Dichloroethene	EPA 8260B	9H12030	0.60	4.0	ND	2	08/12/09	08/12/09	
1,2-Dichloropropane	EPA 8260B	9H12030	0.70	4.0	ND	2	08/12/09	08/12/09	
1,3-Dichloropropane	EPA 8260B	9H12030	0.64	4.0	ND	2	08/12/09	08/12/09	
2,2-Dichloropropane	EPA 8260B	9H12030	0.68	4.0	ND	2	08/12/09	08/12/09	

TestAmerica Irvine

Joseph Doak
Project Manager

The results pertain only to the samples tested in the laboratory. This report shall not be reproduced, except in full, without written permission from TestAmerica.

TestAmerica
THE LEADER IN ENVIRONMENTAL TESTING

17461 Derian Avenue. Suite 100, Irvine, CA 92614 (949) 261-1022 Fax:(949) 260-3297

Applied Process Technology
3333 Vincent Road, Suite 222
Pleasant Hill, CA 94523
Attention: Keel Robinson

Project ID: Montrose-Torrance Bench Study
P1190
Report Number: ISH0701

Sampled: 08/07/09
Received: 08/08/09

VOLATILE ORGANICS by GC/MS (EPA 5030B/8260B)

Analyte	Method	Batch	MDL Limit	Reporting Limit	Sample Result	Dilution Factor	Date Extracted	Date Analyzed	Data Qualifiers
Sample ID: ISH0701-02RE1 (P1190-SP-1-500 - Water) - cont.					**Sampled: 08/07/09**				
Reporting Units: ug/l									
cis-1,3-Dichloropropene	EPA 8260B	9H12030	0.44	4.0	ND	2	08/12/09	08/12/09	
trans-1,3-Dichloropropene	EPA 8260B	9H12030	0.64	4.0	ND	2	08/12/09	08/12/09	
1,1-Dichloropropene	EPA 8260B	9H12030	0.56	4.0	ND	2	08/12/09	08/12/09	
1,2-Dichloro-1,1,2-trifluoroethane	EPA 8260B	9H12030	2.2	4.0	ND	2	08/12/09	08/12/09	
Ethylbenzene	EPA 8260B	9H12030	0.50	4.0	ND	2	08/12/09	08/12/09	
Hexachlorobutadiene	EPA 8260B	9H12030	0.76	10	ND	2	08/12/09	08/12/09	
2-Hexanone	EPA 8260B	9H12030	5.2	20	ND	2	08/12/09	08/12/09	
Isopropylbenzene	EPA 8260B	9H12030	0.50	4.0	ND	2	08/12/09	08/12/09	
p-Isopropyltoluene	EPA 8260B	9H12030	0.56	4.0	ND	2	08/12/09	08/12/09	
4-Methyl-2-pentanone (MIBK)	EPA 8260B	9H12030	7.0	20	ND	2	08/12/09	08/12/09	
Methylene chloride	EPA 8260B	9H12030	1.9	10	ND	2	08/12/09	08/12/09	
Naphthalene	EPA 8260B	9H12030	0.82	10	ND	2	08/12/09	08/12/09	
n-Propylbenzene	EPA 8260B	9H12030	0.54	4.0	ND	2	08/12/09	08/12/09	
Styrene	EPA 8260B	9H12030	0.40	4.0	ND	2	08/12/09	08/12/09	
1,1,1,2-Tetrachloroethane	EPA 8260B	9H12030	0.54	10	ND	2	08/12/09	08/12/09	
1,1,2,2-Tetrachloroethane	EPA 8260B	9H12030	0.60	2.0	ND	2	08/12/09	08/12/09	
Tetrachloroethene	EPA 8260B	9H12030	0.64	4.0	ND	2	08/12/09	08/12/09	
Toluene	EPA 8260B	9H12030	0.72	4.0	ND	2	08/12/09	08/12/09	
1,2,3-Trichlorobenzene	EPA 8260B	9H12030	0.60	10	ND	2	08/12/09	08/12/09	
1,2,4-Trichlorobenzene	EPA 8260B	9H12030	0.96	10	ND	2	08/12/09	08/12/09	
1,1,1-Trichloroethane	EPA 8260B	9H12030	0.60	4.0	ND	2	08/12/09	08/12/09	
1,1,2-Trichloroethane	EPA 8260B	9H12030	0.60	4.0	ND	2	08/12/09	08/12/09	
Trichloroethene	EPA 8260B	9H12030	0.52	4.0	ND	2	08/12/09	08/12/09	
Trichlorofluoromethane	EPA 8260B	9H12030	0.68	10	ND	2	08/12/09	08/12/09	
1,2,3-Trichloropropane	EPA 8260B	9H12030	0.80	20	ND	2	08/12/09	08/12/09	
1,2,4-Trimethylbenzene	EPA 8260B	9H12030	0.46	4.0	ND	2	08/12/09	08/12/09	
1,3,5-Trimethylbenzene	EPA 8260B	9H12030	0.52	4.0	ND	2	08/12/09	08/12/09	
Vinyl acetate	EPA 8260B	9H12030	2.0	10	ND	2	08/12/09	08/12/09	
Vinyl chloride	EPA 8260B	9H12030	0.80	1.0	ND	2	08/12/09	08/12/09	
m,p-Xylenes	EPA 8260B	9H12030	1.2	4.0	ND	2	08/12/09	08/12/09	
o-Xylene	EPA 8260B	9H12030	0.60	4.0	ND	2	08/12/09	08/12/09	
Xylenes, Total	EPA 8260B	9H12030	1.8	4.0	ND	2	08/12/09	08/12/09	
Surrogate: 4-Bromofluorobenzene (80-120%)					*95 %*				
Surrogate: Dibromofluoromethane (80-120%)					*107 %*				
Surrogate: Toluene-d8 (80-120%)					*105 %*				

TestAmerica Irvine

Joseph Doak
Project Manager

The results pertain only to the samples tested in the laboratory. This report shall not be reproduced, except in full, without written permission from TestAmerica.

TestAmerica
THE LEADER IN ENVIRONMENTAL TESTING

17461 Derian Avenue. Suite 100, Irvine, CA 92614 (949) 261-1022 Fax:(949) 260-3297

Applied Process Technology
3333 Vincent Road, Suite 222
Pleasant Hill, CA 94523
Attention: Keel Robinson

Project ID: Montrose-Torrance Bench Study
P1190
Report Number: ISH0701

Sampled: 08/07/09
Received: 08/08/09

VOLATILE ORGANICS by GC/MS (EPA 5030B/8260B)

Analyte	Method	Batch	MDL Limit	Reporting Limit	Sample Result	Dilution Factor	Date Extracted	Date Analyzed	Data Qualifiers
Sample ID: ISH0701-03 (P1190-SP-2-500 - Water)					**Sampled: 08/07/09**				
Reporting Units: ug/l									
Chlorobenzene	EPA 8260B	9H12030	1.8	10	**300**	5	08/12/09	08/12/09	
Surrogate: 4-Bromofluorobenzene (80-120%)					*98 %*				
Surrogate: Dibromofluoromethane (80-120%)					*104 %*				
Surrogate: Toluene-d8 (80-120%)					*110 %*				
Sample ID: ISH0701-03RE1 (P1190-SP-2-500 - Water)					**Sampled: 08/07/09**				
Reporting Units: ug/l									
Acetone	EPA 8260B	9H12036	4.5	10	**6.6**	1	08/12/09	08/13/09	J
Benzene	EPA 8260B	9H12036	0.28	2.0	**0.74**	1	08/12/09	08/13/09	J
Bromobenzene	EPA 8260B	9H12036	0.27	5.0	ND	1	08/12/09	08/13/09	
Bromochloromethane	EPA 8260B	9H12036	0.40	5.0	ND	1	08/12/09	08/13/09	
Bromodichloromethane	EPA 8260B	9H12036	0.30	2.0	ND	1	08/12/09	08/13/09	
Bromoform	EPA 8260B	9H12036	0.40	5.0	ND	1	08/12/09	08/13/09	
Bromomethane	EPA 8260B	9H12036	0.42	5.0	ND	1	08/12/09	08/13/09	
2-Butanone (MEK)	EPA 8260B	9H12036	4.7	10	ND	1	08/12/09	08/13/09	
n-Butylbenzene	EPA 8260B	9H12036	0.37	5.0	ND	1	08/12/09	08/13/09	
sec-Butylbenzene	EPA 8260B	9H12036	0.25	5.0	ND	1	08/12/09	08/13/09	
tert-Butylbenzene	EPA 8260B	9H12036	0.22	5.0	ND	1	08/12/09	08/13/09	
Carbon Disulfide	EPA 8260B	9H12036	0.48	1.0	ND	1	08/12/09	08/13/09	
Carbon tetrachloride	EPA 8260B	9H12036	0.28	0.50	ND	1	08/12/09	08/13/09	
Chloroethane	EPA 8260B	9H12036	0.40	5.0	ND	1	08/12/09	08/13/09	
Chloroform	EPA 8260B	9H12036	0.33	2.0	ND	1	08/12/09	08/13/09	
Chloromethane	EPA 8260B	9H12036	0.40	1.5	ND	1	08/12/09	08/13/09	
2-Chlorotoluene	EPA 8260B	9H12036	0.28	5.0	ND	1	08/12/09	08/13/09	
4-Chlorotoluene	EPA 8260B	9H12036	0.29	5.0	ND	1	08/12/09	08/13/09	
1,2-Dibromo-3-chloropropane	EPA 8260B	9H12036	0.97	5.0	ND	1	08/12/09	08/13/09	
Dibromochloromethane	EPA 8260B	9H12036	0.40	2.0	ND	1	08/12/09	08/13/09	
1,2-Dibromoethane (EDB)	EPA 8260B	9H12036	0.40	2.0	ND	1	08/12/09	08/13/09	
Dibromomethane	EPA 8260B	9H12036	0.36	2.0	ND	1	08/12/09	08/13/09	
1,2-Dichlorobenzene	EPA 8260B	9H12036	0.32	2.0	ND	1	08/12/09	08/13/09	
1,3-Dichlorobenzene	EPA 8260B	9H12036	0.35	2.0	ND	1	08/12/09	08/13/09	
1,4-Dichlorobenzene	EPA 8260B	9H12036	0.37	2.0	ND	1	08/12/09	08/13/09	
Dichlorodifluoromethane	EPA 8260B	9H12036	0.26	5.0	ND	1	08/12/09	08/13/09	
1,1-Dichloroethane	EPA 8260B	9H12036	0.40	2.0	ND	1	08/12/09	08/13/09	
1,2-Dichloroethane	EPA 8260B	9H12036	0.28	0.50	**1.4**	1	08/12/09	08/13/09	
1,1-Dichloroethene	EPA 8260B	9H12036	0.42	5.0	ND	1	08/12/09	08/13/09	
cis-1,2-Dichloroethene	EPA 8260B	9H12036	0.32	2.0	ND	1	08/12/09	08/13/09	
trans-1,2-Dichloroethene	EPA 8260B	9H12036	0.30	2.0	ND	1	08/12/09	08/13/09	
1,2-Dichloropropane	EPA 8260B	9H12036	0.35	2.0	ND	1	08/12/09	08/13/09	
1,3-Dichloropropane	EPA 8260B	9H12036	0.32	2.0	ND	1	08/12/09	08/13/09	
2,2-Dichloropropane	EPA 8260B	9H12036	0.34	2.0	ND	1	08/12/09	08/13/09	

TestAmerica Irvine

Joseph Doak
Project Manager

The results pertain only to the samples tested in the laboratory. This report shall not be reproduced, except in full, without written permission from TestAmerica.

TestAmerica
THE LEADER IN ENVIRONMENTAL TESTING

17461 Derian Avenue. Suite 100, Irvine, CA 92614 (949) 261-1022 Fax:(949) 260-3297

Applied Process Technology
3333 Vincent Road, Suite 222
Pleasant Hill, CA 94523
Attention: Keel Robinson

Project ID: Montrose-Torrance Bench Study
P1190
Report Number: ISH0701

Sampled: 08/07/09
Received: 08/08/09

VOLATILE ORGANICS by GC/MS (EPA 5030B/8260B)

Analyte	Method	Batch	MDL Limit	Reporting Limit	Sample Result	Dilution Factor	Date Extracted	Date Analyzed	Data Qualifiers
Sample ID: ISH0701-03RE1 (P1190-SP-2-500 - Water) - cont.					**Sampled: 08/07/09**				
Reporting Units: ug/l									
cis-1,3-Dichloropropene	EPA 8260B	9H12036	0.22	2.0	ND	1	08/12/09	08/13/09	
trans-1,3-Dichloropropene	EPA 8260B	9H12036	0.32	2.0	ND	1	08/12/09	08/13/09	
1,1-Dichloropropene	EPA 8260B	9H12036	0.28	2.0	ND	1	08/12/09	08/13/09	
1,2-Dichloro-1,1,2-trifluoroethane	EPA 8260B	9H12036	1.1	2.0	ND	1	08/12/09	08/13/09	
Ethylbenzene	EPA 8260B	9H12036	0.25	2.0	ND	1	08/12/09	08/13/09	
Hexachlorobutadiene	EPA 8260B	9H12036	0.38	5.0	ND	1	08/12/09	08/13/09	
2-Hexanone	EPA 8260B	9H12036	2.6	10	ND	1	08/12/09	08/13/09	
Isopropylbenzene	EPA 8260B	9H12036	0.25	2.0	ND	1	08/12/09	08/13/09	
p-Isopropyltoluene	EPA 8260B	9H12036	0.28	2.0	ND	1	08/12/09	08/13/09	
4-Methyl-2-pentanone (MIBK)	EPA 8260B	9H12036	3.5	10	ND	1	08/12/09	08/13/09	
Methylene chloride	EPA 8260B	9H12036	0.95	5.0	**1.1**	1	08/12/09	08/13/09	J
Naphthalene	EPA 8260B	9H12036	0.41	5.0	ND	1	08/12/09	08/13/09	
n-Propylbenzene	EPA 8260B	9H12036	0.27	2.0	ND	1	08/12/09	08/13/09	
Styrene	EPA 8260B	9H12036	0.20	2.0	ND	1	08/12/09	08/13/09	
1,1,1,2-Tetrachloroethane	EPA 8260B	9H12036	0.27	5.0	ND	1	08/12/09	08/13/09	
1,1,2,2-Tetrachloroethane	EPA 8260B	9H12036	0.30	1.0	ND	1	08/12/09	08/13/09	
Tetrachloroethene	EPA 8260B	9H12036	0.32	2.0	ND	1	08/12/09	08/13/09	
Toluene	EPA 8260B	9H12036	0.36	2.0	ND	1	08/12/09	08/13/09	
1,2,3-Trichlorobenzene	EPA 8260B	9H12036	0.30	5.0	ND	1	08/12/09	08/13/09	
1,2,4-Trichlorobenzene	EPA 8260B	9H12036	0.48	5.0	ND	1	08/12/09	08/13/09	
1,1,1-Trichloroethane	EPA 8260B	9H12036	0.30	2.0	ND	1	08/12/09	08/13/09	
1,1,2-Trichloroethane	EPA 8260B	9H12036	0.30	2.0	ND	1	08/12/09	08/13/09	
Trichloroethene	EPA 8260B	9H12036	0.26	2.0	ND	1	08/12/09	08/13/09	
Trichlorofluoromethane	EPA 8260B	9H12036	0.34	5.0	ND	1	08/12/09	08/13/09	
1,2,3-Trichloropropane	EPA 8260B	9H12036	0.40	10	ND	1	08/12/09	08/13/09	
1,2,4-Trimethylbenzene	EPA 8260B	9H12036	0.23	2.0	ND	1	08/12/09	08/13/09	
1,3,5-Trimethylbenzene	EPA 8260B	9H12036	0.26	2.0	ND	1	08/12/09	08/13/09	
Vinyl acetate	EPA 8260B	9H12036	1.0	5.0	ND	1	08/12/09	08/13/09	
Vinyl chloride	EPA 8260B	9H12036	0.40	0.50	ND	1	08/12/09	08/13/09	
m,p-Xylenes	EPA 8260B	9H12036	0.60	2.0	ND	1	08/12/09	08/13/09	
o-Xylene	EPA 8260B	9H12036	0.30	2.0	ND	1	08/12/09	08/13/09	
Xylenes, Total	EPA 8260B	9H12036	0.90	2.0	ND	1	08/12/09	08/13/09	
Surrogate: 4-Bromofluorobenzene (80-120%)					*103 %*				
Surrogate: Dibromofluoromethane (80-120%)					*105 %*				
Surrogate: Toluene-d8 (80-120%)					*107 %*				

TestAmerica Irvine

Joseph Doak
Project Manager

The results pertain only to the samples tested in the laboratory. This report shall not be reproduced, except in full, without written permission from TestAmerica.

TestAmerica
THE LEADER IN ENVIRONMENTAL TESTING

17461 Derian Avenue. Suite 100, Irvine, CA 92614 (949) 261-1022 Fax:(949) 260-3297

Applied Process Technology
3333 Vincent Road, Suite 222
Pleasant Hill, CA 94523
Attention: Keel Robinson

Project ID: Montrose-Torrance Bench Study
P1190
Report Number: ISH0701

Sampled: 08/07/09
Received: 08/08/09

VOLATILE ORGANICS by GC/MS (EPA 5030B/8260B)

Analyte	Method	Batch	MDL Limit	Reporting Limit	Sample Result	Dilution Factor	Date Extracted	Date Analyzed	Data Qualifiers
Sample ID: ISH0701-04 (P1190-SP-3-500 - Water)					**Sampled: 08/07/09**				
Reporting Units: ug/l									
Chlorobenzene	EPA 8260B	9H12030	3.6	20	**770**	10	08/12/09	08/12/09	
Surrogate: 4-Bromofluorobenzene (80-120%)					*98 %*				
Surrogate: Dibromofluoromethane (80-120%)					*103 %*				
Surrogate: Toluene-d8 (80-120%)					*105 %*				
Sample ID: ISH0701-04RE1 (P1190-SP-3-500 - Water)					**Sampled: 08/07/09**				
Reporting Units: ug/l									
Acetone	EPA 8260B	9H12030	9.0	20	ND	2	08/12/09	08/12/09	
Benzene	EPA 8260B	9H12030	0.56	4.0	**1.4**	2	08/12/09	08/12/09	J
Bromobenzene	EPA 8260B	9H12030	0.54	10	ND	2	08/12/09	08/12/09	
Bromochloromethane	EPA 8260B	9H12030	0.80	10	ND	2	08/12/09	08/12/09	
Bromodichloromethane	EPA 8260B	9H12030	0.60	4.0	ND	2	08/12/09	08/12/09	
Bromoform	EPA 8260B	9H12030	0.80	10	ND	2	08/12/09	08/12/09	
Bromomethane	EPA 8260B	9H12030	0.84	10	ND	2	08/12/09	08/12/09	
2-Butanone (MEK)	EPA 8260B	9H12030	9.4	20	ND	2	08/12/09	08/12/09	
n-Butylbenzene	EPA 8260B	9H12030	0.74	10	ND	2	08/12/09	08/12/09	
sec-Butylbenzene	EPA 8260B	9H12030	0.50	10	ND	2	08/12/09	08/12/09	
tert-Butylbenzene	EPA 8260B	9H12030	0.44	10	ND	2	08/12/09	08/12/09	
Carbon Disulfide	EPA 8260B	9H12030	0.96	2.0	ND	2	08/12/09	08/12/09	
Carbon tetrachloride	EPA 8260B	9H12030	0.56	1.0	ND	2	08/12/09	08/12/09	
Chloroethane	EPA 8260B	9H12030	0.80	10	ND	2	08/12/09	08/12/09	
Chloroform	EPA 8260B	9H12030	0.66	4.0	ND	2	08/12/09	08/12/09	
Chloromethane	EPA 8260B	9H12030	0.80	3.0	ND	2	08/12/09	08/12/09	
2-Chlorotoluene	EPA 8260B	9H12030	0.56	10	ND	2	08/12/09	08/12/09	
4-Chlorotoluene	EPA 8260B	9H12030	0.58	10	ND	2	08/12/09	08/12/09	
1,2-Dibromo-3-chloropropane	EPA 8260B	9H12030	1.9	10	ND	2	08/12/09	08/12/09	
Dibromochloromethane	EPA 8260B	9H12030	0.80	4.0	ND	2	08/12/09	08/12/09	
1,2-Dibromoethane (EDB)	EPA 8260B	9H12030	0.80	4.0	ND	2	08/12/09	08/12/09	
Dibromomethane	EPA 8260B	9H12030	0.72	4.0	ND	2	08/12/09	08/12/09	
1,2-Dichlorobenzene	EPA 8260B	9H12030	0.64	4.0	ND	2	08/12/09	08/12/09	
1,3-Dichlorobenzene	EPA 8260B	9H12030	0.70	4.0	ND	2	08/12/09	08/12/09	
1,4-Dichlorobenzene	EPA 8260B	9H12030	0.74	4.0	**0.84**	2	08/12/09	08/12/09	J
Dichlorodifluoromethane	EPA 8260B	9H12030	0.52	10	ND	2	08/12/09	08/12/09	
1,1-Dichloroethane	EPA 8260B	9H12030	0.80	4.0	ND	2	08/12/09	08/12/09	
1,2-Dichloroethane	EPA 8260B	9H12030	0.56	1.0	**2.0**	2	08/12/09	08/12/09	
1,1-Dichloroethene	EPA 8260B	9H12030	0.84	10	ND	2	08/12/09	08/12/09	
cis-1,2-Dichloroethene	EPA 8260B	9H12030	0.64	4.0	ND	2	08/12/09	08/12/09	
trans-1,2-Dichloroethene	EPA 8260B	9H12030	0.60	4.0	ND	2	08/12/09	08/12/09	
1,2-Dichloropropane	EPA 8260B	9H12030	0.70	4.0	ND	2	08/12/09	08/12/09	
1,3-Dichloropropane	EPA 8260B	9H12030	0.64	4.0	ND	2	08/12/09	08/12/09	
2,2-Dichloropropane	EPA 8260B	9H12030	0.68	4.0	ND	2	08/12/09	08/12/09	

TestAmerica Irvine

Joseph Doak
Project Manager

The results pertain only to the samples tested in the laboratory. This report shall not be reproduced, except in full, without written permission from TestAmerica.

TestAmerica
THE LEADER IN ENVIRONMENTAL TESTING

17461 Derian Avenue. Suite 100, Irvine, CA 92614 (949) 261-1022 Fax:(949) 260-3297

Applied Process Technology
3333 Vincent Road, Suite 222
Pleasant Hill, CA 94523
Attention: Keel Robinson

Project ID: Montrose-Torrance Bench Study
P1190
Report Number: ISH0701

Sampled: 08/07/09
Received: 08/08/09

VOLATILE ORGANICS by GC/MS (EPA 5030B/8260B)

Analyte	Method	Batch	MDL Limit	Reporting Limit	Sample Result	Dilution Factor	Date Extracted	Date Analyzed	Data Qualifiers
Sample ID: ISH0701-04RE1 (P1190-SP-3-500 - Water) - cont.					**Sampled: 08/07/09**				
Reporting Units: ug/l									
cis-1,3-Dichloropropene	EPA 8260B	9H12030	0.44	4.0	ND	2	08/12/09	08/12/09	
trans-1,3-Dichloropropene	EPA 8260B	9H12030	0.64	4.0	ND	2	08/12/09	08/12/09	
1,1-Dichloropropene	EPA 8260B	9H12030	0.56	4.0	ND	2	08/12/09	08/12/09	
1,2-Dichloro-1,1,2-trifluoroethane	EPA 8260B	9H12030	2.2	4.0	ND	2	08/12/09	08/12/09	
Ethylbenzene	EPA 8260B	9H12030	0.50	4.0	ND	2	08/12/09	08/12/09	
Hexachlorobutadiene	EPA 8260B	9H12030	0.76	10	ND	2	08/12/09	08/12/09	
2-Hexanone	EPA 8260B	9H12030	5.2	20	ND	2	08/12/09	08/12/09	
Isopropylbenzene	EPA 8260B	9H12030	0.50	4.0	ND	2	08/12/09	08/12/09	
p-Isopropyltoluene	EPA 8260B	9H12030	0.56	4.0	ND	2	08/12/09	08/12/09	
4-Methyl-2-pentanone (MIBK)	EPA 8260B	9H12030	7.0	20	ND	2	08/12/09	08/12/09	
Methylene chloride	EPA 8260B	9H12030	1.9	10	ND	2	08/12/09	08/12/09	
Naphthalene	EPA 8260B	9H12030	0.82	10	ND	2	08/12/09	08/12/09	
n-Propylbenzene	EPA 8260B	9H12030	0.54	4.0	ND	2	08/12/09	08/12/09	
Styrene	EPA 8260B	9H12030	0.40	4.0	ND	2	08/12/09	08/12/09	
1,1,1,2-Tetrachloroethane	EPA 8260B	9H12030	0.54	10	ND	2	08/12/09	08/12/09	
1,1,2,2-Tetrachloroethane	EPA 8260B	9H12030	0.60	2.0	ND	2	08/12/09	08/12/09	
Tetrachloroethene	EPA 8260B	9H12030	0.64	4.0	ND	2	08/12/09	08/12/09	
Toluene	EPA 8260B	9H12030	0.72	4.0	ND	2	08/12/09	08/12/09	
1,2,3-Trichlorobenzene	EPA 8260B	9H12030	0.60	10	ND	2	08/12/09	08/12/09	
1,2,4-Trichlorobenzene	EPA 8260B	9H12030	0.96	10	ND	2	08/12/09	08/12/09	
1,1,1-Trichloroethane	EPA 8260B	9H12030	0.60	4.0	ND	2	08/12/09	08/12/09	
1,1,2-Trichloroethane	EPA 8260B	9H12030	0.60	4.0	ND	2	08/12/09	08/12/09	
Trichloroethene	EPA 8260B	9H12030	0.52	4.0	ND	2	08/12/09	08/12/09	
Trichlorofluoromethane	EPA 8260B	9H12030	0.68	10	ND	2	08/12/09	08/12/09	
1,2,3-Trichloropropane	EPA 8260B	9H12030	0.80	20	ND	2	08/12/09	08/12/09	
1,2,4-Trimethylbenzene	EPA 8260B	9H12030	0.46	4.0	ND	2	08/12/09	08/12/09	
1,3,5-Trimethylbenzene	EPA 8260B	9H12030	0.52	4.0	ND	2	08/12/09	08/12/09	
Vinyl acetate	EPA 8260B	9H12030	2.0	10	ND	2	08/12/09	08/12/09	
Vinyl chloride	EPA 8260B	9H12030	0.80	1.0	ND	2	08/12/09	08/12/09	
m,p-Xylenes	EPA 8260B	9H12030	1.2	4.0	ND	2	08/12/09	08/12/09	
o-Xylene	EPA 8260B	9H12030	0.60	4.0	ND	2	08/12/09	08/12/09	
Xylenes, Total	EPA 8260B	9H12030	1.8	4.0	ND	2	08/12/09	08/12/09	
Surrogate: 4-Bromofluorobenzene (80-120%)					*93 %*				
Surrogate: Dibromofluoromethane (80-120%)					*109 %*				
Surrogate: Toluene-d8 (80-120%)					*107 %*				

TestAmerica Irvine

Joseph Doak
Project Manager

The results pertain only to the samples tested in the laboratory. This report shall not be reproduced, except in full, without written permission from TestAmerica.

TestAmerica
THE LEADER IN ENVIRONMENTAL TESTING
17461 Derian Avenue. Suite 100, Irvine, CA 92614 (949) 261-1022 Fax:(949) 260-3297

Applied Process Technology
3333 Vincent Road, Suite 222
Pleasant Hill, CA 94523
Attention: Keel Robinson

Project ID: Montrose-Torrance Bench Study
P1190
Report Number: ISH0701

Sampled: 08/07/09
Received: 08/08/09

VOLATILE ORGANICS by GC/MS (EPA 5030B/8260B)

Analyte	Method	Batch	MDL Limit	Reporting Limit	Sample Result	Dilution Factor	Date Extracted	Date Analyzed	Data Qualifiers
Sample ID: ISH0701-05 (P1190-SP-4-500 - Water)					**Sampled: 08/07/09**				
Reporting Units: ug/l									
Chlorobenzene	EPA 8260B	9H12030	3.6	20	**710**	10	08/12/09	08/12/09	
Surrogate: 4-Bromofluorobenzene (80-120%)					*93 %*				
Surrogate: Dibromofluoromethane (80-120%)					*106 %*				
Surrogate: Toluene-d8 (80-120%)					*111 %*				
Sample ID: ISH0701-05RE1 (P1190-SP-4-500 - Water)					**Sampled: 08/07/09**				
Reporting Units: ug/l									
Acetone	EPA 8260B	9H12030	9.0	20	ND	2	08/12/09	08/12/09	
Benzene	EPA 8260B	9H12030	0.56	4.0	**2.1**	2	08/12/09	08/12/09	J
Bromobenzene	EPA 8260B	9H12030	0.54	10	ND	2	08/12/09	08/12/09	
Bromochloromethane	EPA 8260B	9H12030	0.80	10	ND	2	08/12/09	08/12/09	
Bromodichloromethane	EPA 8260B	9H12030	0.60	4.0	ND	2	08/12/09	08/12/09	
Bromoform	EPA 8260B	9H12030	0.80	10	ND	2	08/12/09	08/12/09	
Bromomethane	EPA 8260B	9H12030	0.84	10	ND	2	08/12/09	08/12/09	
2-Butanone (MEK)	EPA 8260B	9H12030	9.4	20	ND	2	08/12/09	08/12/09	
n-Butylbenzene	EPA 8260B	9H12030	0.74	10	ND	2	08/12/09	08/12/09	
sec-Butylbenzene	EPA 8260B	9H12030	0.50	10	ND	2	08/12/09	08/12/09	
tert-Butylbenzene	EPA 8260B	9H12030	0.44	10	ND	2	08/12/09	08/12/09	
Carbon Disulfide	EPA 8260B	9H12030	0.96	2.0	ND	2	08/12/09	08/12/09	
Carbon tetrachloride	EPA 8260B	9H12030	0.56	1.0	ND	2	08/12/09	08/12/09	
Chloroethane	EPA 8260B	9H12030	0.80	10	ND	2	08/12/09	08/12/09	
Chloroform	EPA 8260B	9H12030	0.66	4.0	ND	2	08/12/09	08/12/09	
Chloromethane	EPA 8260B	9H12030	0.80	3.0	ND	2	08/12/09	08/12/09	
2-Chlorotoluene	EPA 8260B	9H12030	0.56	10	ND	2	08/12/09	08/12/09	
4-Chlorotoluene	EPA 8260B	9H12030	0.58	10	ND	2	08/12/09	08/12/09	
1,2-Dibromo-3-chloropropane	EPA 8260B	9H12030	1.9	10	ND	2	08/12/09	08/12/09	
Dibromochloromethane	EPA 8260B	9H12030	0.80	4.0	ND	2	08/12/09	08/12/09	
1,2-Dibromoethane (EDB)	EPA 8260B	9H12030	0.80	4.0	ND	2	08/12/09	08/12/09	
Dibromomethane	EPA 8260B	9H12030	0.72	4.0	ND	2	08/12/09	08/12/09	
1,2-Dichlorobenzene	EPA 8260B	9H12030	0.64	4.0	ND	2	08/12/09	08/12/09	
1,3-Dichlorobenzene	EPA 8260B	9H12030	0.70	4.0	ND	2	08/12/09	08/12/09	
1,4-Dichlorobenzene	EPA 8260B	9H12030	0.74	4.0	**0.88**	2	08/12/09	08/12/09	J
Dichlorodifluoromethane	EPA 8260B	9H12030	0.52	10	ND	2	08/12/09	08/12/09	
1,1-Dichloroethane	EPA 8260B	9H12030	0.80	4.0	ND	2	08/12/09	08/12/09	
1,2-Dichloroethane	EPA 8260B	9H12030	0.56	1.0	**2.4**	2	08/12/09	08/12/09	
1,1-Dichloroethene	EPA 8260B	9H12030	0.84	10	ND	2	08/12/09	08/12/09	
cis-1,2-Dichloroethene	EPA 8260B	9H12030	0.64	4.0	ND	2	08/12/09	08/12/09	
trans-1,2-Dichloroethene	EPA 8260B	9H12030	0.60	4.0	ND	2	08/12/09	08/12/09	
1,2-Dichloropropane	EPA 8260B	9H12030	0.70	4.0	ND	2	08/12/09	08/12/09	
1,3-Dichloropropane	EPA 8260B	9H12030	0.64	4.0	ND	2	08/12/09	08/12/09	
2,2-Dichloropropane	EPA 8260B	9H12030	0.68	4.0	ND	2	08/12/09	08/12/09	

TestAmerica Irvine

Joseph Doak
Project Manager

The results pertain only to the samples tested in the laboratory. This report shall not be reproduced, except in full, without written permission from TestAmerica.

TestAmerica
THE LEADER IN ENVIRONMENTAL TESTING
17461 Derian Avenue. Suite 100, Irvine, CA 92614 (949) 261-1022 Fax:(949) 260-3297

Applied Process Technology
3333 Vincent Road, Suite 222
Pleasant Hill, CA 94523
Attention: Keel Robinson

Project ID: Montrose-Torrance Bench Study
P1190
Report Number: ISH0701

Sampled: 08/07/09
Received: 08/08/09

VOLATILE ORGANICS by GC/MS (EPA 5030B/8260B)

Analyte	Method	Batch	MDL Limit	Reporting Limit	Sample Result	Dilution Factor	Date Extracted	Date Analyzed	Data Qualifiers
Sample ID: ISH0701-05RE1 (P1190-SP-4-500 - Water) - cont.					**Sampled: 08/07/09**				
Reporting Units: ug/l									
cis-1,3-Dichloropropene	EPA 8260B	9H12030	0.44	4.0	ND	2	08/12/09	08/12/09	
trans-1,3-Dichloropropene	EPA 8260B	9H12030	0.64	4.0	ND	2	08/12/09	08/12/09	
1,1-Dichloropropene	EPA 8260B	9H12030	0.56	4.0	ND	2	08/12/09	08/12/09	
1,2-Dichloro-1,1,2-trifluoroethane	EPA 8260B	9H12030	2.2	4.0	ND	2	08/12/09	08/12/09	
Ethylbenzene	EPA 8260B	9H12030	0.50	4.0	ND	2	08/12/09	08/12/09	
Hexachlorobutadiene	EPA 8260B	9H12030	0.76	10	ND	2	08/12/09	08/12/09	
2-Hexanone	EPA 8260B	9H12030	5.2	20	ND	2	08/12/09	08/12/09	
Isopropylbenzene	EPA 8260B	9H12030	0.50	4.0	ND	2	08/12/09	08/12/09	
p-Isopropyltoluene	EPA 8260B	9H12030	0.56	4.0	ND	2	08/12/09	08/12/09	
4-Methyl-2-pentanone (MIBK)	EPA 8260B	9H12030	7.0	20	ND	2	08/12/09	08/12/09	
Methylene chloride	EPA 8260B	9H12030	1.9	10	ND	2	08/12/09	08/12/09	
Naphthalene	EPA 8260B	9H12030	0.82	10	ND	2	08/12/09	08/12/09	
n-Propylbenzene	EPA 8260B	9H12030	0.54	4.0	ND	2	08/12/09	08/12/09	
Styrene	EPA 8260B	9H12030	0.40	4.0	ND	2	08/12/09	08/12/09	
1,1,1,2-Tetrachloroethane	EPA 8260B	9H12030	0.54	10	ND	2	08/12/09	08/12/09	
1,1,2,2-Tetrachloroethane	EPA 8260B	9H12030	0.60	2.0	ND	2	08/12/09	08/12/09	
Tetrachloroethene	EPA 8260B	9H12030	0.64	4.0	ND	2	08/12/09	08/12/09	
Toluene	EPA 8260B	9H12030	0.72	4.0	ND	2	08/12/09	08/12/09	
1,2,3-Trichlorobenzene	EPA 8260B	9H12030	0.60	10	ND	2	08/12/09	08/12/09	
1,2,4-Trichlorobenzene	EPA 8260B	9H12030	0.96	10	ND	2	08/12/09	08/12/09	
1,1,1-Trichloroethane	EPA 8260B	9H12030	0.60	4.0	ND	2	08/12/09	08/12/09	
1,1,2-Trichloroethane	EPA 8260B	9H12030	0.60	4.0	ND	2	08/12/09	08/12/09	
Trichloroethene	EPA 8260B	9H12030	0.52	4.0	ND	2	08/12/09	08/12/09	
Trichlorofluoromethane	EPA 8260B	9H12030	0.68	10	ND	2	08/12/09	08/12/09	
1,2,3-Trichloropropane	EPA 8260B	9H12030	0.80	20	ND	2	08/12/09	08/12/09	
1,2,4-Trimethylbenzene	EPA 8260B	9H12030	0.46	4.0	ND	2	08/12/09	08/12/09	
1,3,5-Trimethylbenzene	EPA 8260B	9H12030	0.52	4.0	ND	2	08/12/09	08/12/09	
Vinyl acetate	EPA 8260B	9H12030	2.0	10	ND	2	08/12/09	08/12/09	
Vinyl chloride	EPA 8260B	9H12030	0.80	1.0	ND	2	08/12/09	08/12/09	
m,p-Xylenes	EPA 8260B	9H12030	1.2	4.0	ND	2	08/12/09	08/12/09	
o-Xylene	EPA 8260B	9H12030	0.60	4.0	ND	2	08/12/09	08/12/09	
Xylenes, Total	EPA 8260B	9H12030	1.8	4.0	ND	2	08/12/09	08/12/09	
Surrogate: 4-Bromofluorobenzene (80-120%)					*98 %*				
Surrogate: Dibromofluoromethane (80-120%)					*104 %*				
Surrogate: Toluene-d8 (80-120%)					*104 %*				

TestAmerica Irvine

Joseph Doak
Project Manager

The results pertain only to the samples tested in the laboratory. This report shall not be reproduced, except in full, without written permission from TestAmerica.

TestAmerica
THE LEADER IN ENVIRONMENTAL TESTING
17461 Derian Avenue. Suite 100, Irvine, CA 92614 (949) 261-1022 Fax:(949) 260-3297

Applied Process Technology
3333 Vincent Road, Suite 222
Pleasant Hill, CA 94523
Attention: Keel Robinson

Project ID: Montrose-Torrance Bench Study
P1190
Report Number: ISH0701

Sampled: 08/07/09
Received: 08/08/09

VOLATILE ORGANICS by GC/MS (EPA 5030B/8260B)

Analyte	Method	Batch	MDL Limit	Reporting Limit	Sample Result	Dilution Factor	Date Extracted	Date Analyzed	Data Qualifiers
Sample ID: ISH0701-06 (P1190-SP-5-500 - Water)					**Sampled: 08/07/09**				
Reporting Units: ug/l									
Chlorobenzene	EPA 8260B	9H12029	3.6	20	**650**	10	08/12/09	08/12/09	
Surrogate: 4-Bromofluorobenzene (80-120%)					*104 %*				
Surrogate: Dibromofluoromethane (80-120%)					*103 %*				
Surrogate: Toluene-d8 (80-120%)					*103 %*				
Sample ID: ISH0701-06RE1 (P1190-SP-5-500 - Water)					**Sampled: 08/07/09**				
Reporting Units: ug/l									
Benzene	EPA 8260B	9H12029	0.56	4.0	**1.2**	2	08/12/09	08/12/09	J
Bromobenzene	EPA 8260B	9H12029	0.54	10	ND	2	08/12/09	08/12/09	
Bromochloromethane	EPA 8260B	9H12029	0.80	10	ND	2	08/12/09	08/12/09	
Bromodichloromethane	EPA 8260B	9H12029	0.60	4.0	ND	2	08/12/09	08/12/09	
Bromoform	EPA 8260B	9H12029	0.80	10	ND	2	08/12/09	08/12/09	
Bromomethane	EPA 8260B	9H12029	0.84	10	ND	2	08/12/09	08/12/09	
2-Butanone (MEK)	EPA 8260B	9H12029	9.4	20	ND	2	08/12/09	08/12/09	
n-Butylbenzene	EPA 8260B	9H12029	0.74	10	ND	2	08/12/09	08/12/09	
sec-Butylbenzene	EPA 8260B	9H12029	0.50	10	ND	2	08/12/09	08/12/09	
tert-Butylbenzene	EPA 8260B	9H12029	0.44	10	ND	2	08/12/09	08/12/09	
Carbon Disulfide	EPA 8260B	9H12029	0.96	2.0	ND	2	08/12/09	08/12/09	
Carbon tetrachloride	EPA 8260B	9H12029	0.56	1.0	ND	2	08/12/09	08/12/09	
Chloroethane	EPA 8260B	9H12029	0.80	10	ND	2	08/12/09	08/12/09	
Chloroform	EPA 8260B	9H12029	0.66	4.0	ND	2	08/12/09	08/12/09	
Chloromethane	EPA 8260B	9H12029	0.80	3.0	ND	2	08/12/09	08/12/09	
2-Chlorotoluene	EPA 8260B	9H12029	0.56	10	ND	2	08/12/09	08/12/09	
4-Chlorotoluene	EPA 8260B	9H12029	0.58	10	ND	2	08/12/09	08/12/09	
1,2-Dibromo-3-chloropropane	EPA 8260B	9H12029	1.9	10	ND	2	08/12/09	08/12/09	
Dibromochloromethane	EPA 8260B	9H12029	0.80	4.0	ND	2	08/12/09	08/12/09	
1,2-Dibromoethane (EDB)	EPA 8260B	9H12029	0.80	4.0	ND	2	08/12/09	08/12/09	
Dibromomethane	EPA 8260B	9H12029	0.72	4.0	ND	2	08/12/09	08/12/09	
1,2-Dichlorobenzene	EPA 8260B	9H12029	0.64	4.0	ND	2	08/12/09	08/12/09	
1,3-Dichlorobenzene	EPA 8260B	9H12029	0.70	4.0	ND	2	08/12/09	08/12/09	
1,4-Dichlorobenzene	EPA 8260B	9H12029	0.74	4.0	ND	2	08/12/09	08/12/09	
Dichlorodifluoromethane	EPA 8260B	9H12029	0.52	10	ND	2	08/12/09	08/12/09	
1,1-Dichloroethane	EPA 8260B	9H12029	0.80	4.0	ND	2	08/12/09	08/12/09	
1,2-Dichloroethane	EPA 8260B	9H12029	0.56	1.0	**1.8**	2	08/12/09	08/12/09	
1,1-Dichloroethene	EPA 8260B	9H12029	0.84	10	ND	2	08/12/09	08/12/09	
cis-1,2-Dichloroethene	EPA 8260B	9H12029	0.64	4.0	ND	2	08/12/09	08/12/09	
trans-1,2-Dichloroethene	EPA 8260B	9H12029	0.60	4.0	ND	2	08/12/09	08/12/09	
1,2-Dichloropropane	EPA 8260B	9H12029	0.70	4.0	ND	2	08/12/09	08/12/09	
1,3-Dichloropropane	EPA 8260B	9H12029	0.64	4.0	ND	2	08/12/09	08/12/09	
2,2-Dichloropropane	EPA 8260B	9H12029	0.68	4.0	ND	2	08/12/09	08/12/09	
cis-1,3-Dichloropropene	EPA 8260B	9H12029	0.44	4.0	ND	2	08/12/09	08/12/09	

TestAmerica Irvine

Joseph Doak
Project Manager

The results pertain only to the samples tested in the laboratory. This report shall not be reproduced, except in full, without written permission from TestAmerica.

TestAmerica
THE LEADER IN ENVIRONMENTAL TESTING

17461 Derian Avenue. Suite 100, Irvine, CA 92614 (949) 261-1022 Fax:(949) 260-3297

Applied Process Technology
3333 Vincent Road, Suite 222
Pleasant Hill, CA 94523
Attention: Keel Robinson

Project ID: Montrose-Torrance Bench Study
P1190
Report Number: ISH0701

Sampled: 08/07/09
Received: 08/08/09

VOLATILE ORGANICS by GC/MS (EPA 5030B/8260B)

Analyte	Method	Batch	MDL Limit	Reporting Limit	Sample Result	Dilution Factor	Date Extracted	Date Analyzed	Data Qualifiers
Sample ID: ISH0701-06RE1 (P1190-SP-5-500 - Water) - cont.					**Sampled: 08/07/09**				
Reporting Units: ug/l									
trans-1,3-Dichloropropene	EPA 8260B	9H12029	0.64	4.0	ND	2	08/12/09	08/12/09	
1,1-Dichloropropene	EPA 8260B	9H12029	0.56	4.0	ND	2	08/12/09	08/12/09	
1,2-Dichloro-1,1,2-trifluoroethane	EPA 8260B	9H12029	2.2	4.0	ND	2	08/12/09	08/12/09	
Ethylbenzene	EPA 8260B	9H12029	0.50	4.0	ND	2	08/12/09	08/12/09	
Hexachlorobutadiene	EPA 8260B	9H12029	0.76	10	ND	2	08/12/09	08/12/09	
2-Hexanone	EPA 8260B	9H12029	5.2	20	ND	2	08/12/09	08/12/09	
Isopropylbenzene	EPA 8260B	9H12029	0.50	4.0	ND	2	08/12/09	08/12/09	
p-Isopropyltoluene	EPA 8260B	9H12029	0.56	4.0	ND	2	08/12/09	08/12/09	
4-Methyl-2-pentanone (MIBK)	EPA 8260B	9H12029	7.0	20	ND	2	08/12/09	08/12/09	
Methylene chloride	EPA 8260B	9H12029	1.9	10	ND	2	08/12/09	08/12/09	
Naphthalene	EPA 8260B	9H12029	0.82	10	ND	2	08/12/09	08/12/09	
n-Propylbenzene	EPA 8260B	9H12029	0.54	4.0	ND	2	08/12/09	08/12/09	
Styrene	EPA 8260B	9H12029	0.40	4.0	ND	2	08/12/09	08/12/09	
1,1,1,2-Tetrachloroethane	EPA 8260B	9H12029	0.54	10	ND	2	08/12/09	08/12/09	
1,1,2,2-Tetrachloroethane	EPA 8260B	9H12029	0.60	2.0	ND	2	08/12/09	08/12/09	
Tetrachloroethene	EPA 8260B	9H12029	0.64	4.0	ND	2	08/12/09	08/12/09	
Toluene	EPA 8260B	9H12029	0.72	4.0	ND	2	08/12/09	08/12/09	
1,2,3-Trichlorobenzene	EPA 8260B	9H12029	0.60	10	ND	2	08/12/09	08/12/09	
1,2,4-Trichlorobenzene	EPA 8260B	9H12029	0.96	10	ND	2	08/12/09	08/12/09	
1,1,1-Trichloroethane	EPA 8260B	9H12029	0.60	4.0	ND	2	08/12/09	08/12/09	
1,1,2-Trichloroethane	EPA 8260B	9H12029	0.60	4.0	ND	2	08/12/09	08/12/09	
Trichloroethene	EPA 8260B	9H12029	0.52	4.0	ND	2	08/12/09	08/12/09	
Trichlorofluoromethane	EPA 8260B	9H12029	0.68	10	ND	2	08/12/09	08/12/09	
1,2,3-Trichloropropane	EPA 8260B	9H12029	0.80	20	ND	2	08/12/09	08/12/09	
1,2,4-Trimethylbenzene	EPA 8260B	9H12029	0.46	4.0	ND	2	08/12/09	08/12/09	
1,3,5-Trimethylbenzene	EPA 8260B	9H12029	0.52	4.0	ND	2	08/12/09	08/12/09	
Vinyl acetate	EPA 8260B	9H12029	2.0	10	ND	2	08/12/09	08/12/09	
Vinyl chloride	EPA 8260B	9H12029	0.80	1.0	ND	2	08/12/09	08/12/09	
m,p-Xylenes	EPA 8260B	9H12029	1.2	4.0	ND	2	08/12/09	08/12/09	
o-Xylene	EPA 8260B	9H12029	0.60	4.0	ND	2	08/12/09	08/12/09	
Xylenes, Total	EPA 8260B	9H12029	1.8	4.0	ND	2	08/12/09	08/12/09	
Surrogate: 4-Bromofluorobenzene (80-120%)					*104 %*				
Surrogate: Dibromofluoromethane (80-120%)					*104 %*				
Surrogate: Toluene-d8 (80-120%)					*102 %*				

TestAmerica Irvine

Joseph Doak
Project Manager

The results pertain only to the samples tested in the laboratory. This report shall not be reproduced, except in full, without written permission from TestAmerica.

TestAmerica
THE LEADER IN ENVIRONMENTAL TESTING

17461 Derian Avenue. Suite 100, Irvine, CA 92614 (949) 261-1022 Fax:(949) 260-3297

Applied Process Technology	Project ID:	Montrose-Torrance Bench Study	
3333 Vincent Road, Suite 222		P1190	Sampled: 08/07/09
Pleasant Hill, CA 94523	Report Number:	ISH0701	Received: 08/08/09
Attention: Keel Robinson			

VOLATILE ORGANICS by GC/MS (EPA 5030B/8260B)

Analyte	Method	Batch	MDL Limit	Reporting Limit	Sample Result	Dilution Factor	Date Extracted	Date Analyzed	Data Qualifiers
Sample ID: ISH0701-06RE2 (P1190-SP-5-500 - Water) - cont.					**Sampled: 08/07/09**				
Reporting Units: ug/l									
Acetone	EPA 8260B	9H14051	9.0	20	ND	2	08/14/09	08/14/09	
Surrogate: 4-Bromofluorobenzene (80-120%)					*100 %*				
Surrogate: Dibromofluoromethane (80-120%)					*97 %*				
Surrogate: Toluene-d8 (80-120%)					*107 %*				

TestAmerica Irvine

Joseph Doak
Project Manager

The results pertain only to the samples tested in the laboratory. This report shall not be reproduced, except in full, without written permission from TestAmerica.

TestAmerica
THE LEADER IN ENVIRONMENTAL TESTING
17461 Derian Avenue. Suite 100, Irvine, CA 92614 (949) 261-1022 Fax:(949) 260-3297

Applied Process Technology
3333 Vincent Road, Suite 222
Pleasant Hill, CA 94523
Attention: Keel Robinson

Project ID: Montrose-Torrance Bench Study
P1190
Report Number: ISH0701

Sampled: 08/07/09
Received: 08/08/09

VOLATILE ORGANICS by GC/MS (EPA 5030B/8260B)

Analyte	Method	Batch	MDL Limit	Reporting Limit	Sample Result	Dilution Factor	Date Extracted	Date Analyzed	Data Qualifiers
Sample ID: ISH0701-07 (P1190-SP-6-500 - Water)					**Sampled: 08/07/09**				
Reporting Units: ug/l									
Chlorobenzene	EPA 8260B	9H12029	3.6	20	**530**	10	08/12/09	08/12/09	
Surrogate: 4-Bromofluorobenzene (80-120%)					*104 %*				
Surrogate: Dibromofluoromethane (80-120%)					*106 %*				
Surrogate: Toluene-d8 (80-120%)					*104 %*				
Sample ID: ISH0701-07RE1 (P1190-SP-6-500 - Water)					**Sampled: 08/07/09**				
Reporting Units: ug/l									
Benzene	EPA 8260B	9H12029	0.56	4.0	**1.3**	2	08/12/09	08/12/09	J
Bromobenzene	EPA 8260B	9H12029	0.54	10	ND	2	08/12/09	08/12/09	
Bromochloromethane	EPA 8260B	9H12029	0.80	10	ND	2	08/12/09	08/12/09	
Bromodichloromethane	EPA 8260B	9H12029	0.60	4.0	ND	2	08/12/09	08/12/09	
Bromoform	EPA 8260B	9H12029	0.80	10	ND	2	08/12/09	08/12/09	
Bromomethane	EPA 8260B	9H12029	0.84	10	ND	2	08/12/09	08/12/09	
2-Butanone (MEK)	EPA 8260B	9H12029	9.4	20	ND	2	08/12/09	08/12/09	
n-Butylbenzene	EPA 8260B	9H12029	0.74	10	ND	2	08/12/09	08/12/09	
sec-Butylbenzene	EPA 8260B	9H12029	0.50	10	ND	2	08/12/09	08/12/09	
tert-Butylbenzene	EPA 8260B	9H12029	0.44	10	ND	2	08/12/09	08/12/09	
Carbon Disulfide	EPA 8260B	9H12029	0.96	2.0	ND	2	08/12/09	08/12/09	
Carbon tetrachloride	EPA 8260B	9H12029	0.56	1.0	ND	2	08/12/09	08/12/09	
Chloroethane	EPA 8260B	9H12029	0.80	10	ND	2	08/12/09	08/12/09	
Chloroform	EPA 8260B	9H12029	0.66	4.0	ND	2	08/12/09	08/12/09	
Chloromethane	EPA 8260B	9H12029	0.80	3.0	ND	2	08/12/09	08/12/09	
2-Chlorotoluene	EPA 8260B	9H12029	0.56	10	ND	2	08/12/09	08/12/09	
4-Chlorotoluene	EPA 8260B	9H12029	0.58	10	ND	2	08/12/09	08/12/09	
1,2-Dibromo-3-chloropropane	EPA 8260B	9H12029	1.9	10	ND	2	08/12/09	08/12/09	
Dibromochloromethane	EPA 8260B	9H12029	0.80	4.0	ND	2	08/12/09	08/12/09	
1,2-Dibromoethane (EDB)	EPA 8260B	9H12029	0.80	4.0	ND	2	08/12/09	08/12/09	
Dibromomethane	EPA 8260B	9H12029	0.72	4.0	ND	2	08/12/09	08/12/09	
1,2-Dichlorobenzene	EPA 8260B	9H12029	0.64	4.0	ND	2	08/12/09	08/12/09	
1,3-Dichlorobenzene	EPA 8260B	9H12029	0.70	4.0	ND	2	08/12/09	08/12/09	
1,4-Dichlorobenzene	EPA 8260B	9H12029	0.74	4.0	ND	2	08/12/09	08/12/09	
Dichlorodifluoromethane	EPA 8260B	9H12029	0.52	10	ND	2	08/12/09	08/12/09	
1,1-Dichloroethane	EPA 8260B	9H12029	0.80	4.0	ND	2	08/12/09	08/12/09	
1,2-Dichloroethane	EPA 8260B	9H12029	0.56	1.0	**1.8**	2	08/12/09	08/12/09	
1,1-Dichloroethene	EPA 8260B	9H12029	0.84	10	ND	2	08/12/09	08/12/09	
cis-1,2-Dichloroethene	EPA 8260B	9H12029	0.64	4.0	ND	2	08/12/09	08/12/09	
trans-1,2-Dichloroethene	EPA 8260B	9H12029	0.60	4.0	ND	2	08/12/09	08/12/09	
1,2-Dichloropropane	EPA 8260B	9H12029	0.70	4.0	ND	2	08/12/09	08/12/09	
1,3-Dichloropropane	EPA 8260B	9H12029	0.64	4.0	ND	2	08/12/09	08/12/09	
2,2-Dichloropropane	EPA 8260B	9H12029	0.68	4.0	ND	2	08/12/09	08/12/09	
cis-1,3-Dichloropropene	EPA 8260B	9H12029	0.44	4.0	ND	2	08/12/09	08/12/09	

TestAmerica Irvine

Joseph Doak
Project Manager

The results pertain only to the samples tested in the laboratory. This report shall not be reproduced, except in full, without written permission from TestAmerica.

TestAmerica
THE LEADER IN ENVIRONMENTAL TESTING

17461 Derian Avenue. Suite 100, Irvine, CA 92614 (949) 261-1022 Fax:(949) 260-3297

Applied Process Technology
3333 Vincent Road, Suite 222
Pleasant Hill, CA 94523
Attention: Keel Robinson

Project ID: Montrose-Torrance Bench Study
P1190
Report Number: ISH0701

Sampled: 08/07/09
Received: 08/08/09

VOLATILE ORGANICS by GC/MS (EPA 5030B/8260B)

Analyte	Method	Batch	MDL Limit	Reporting Limit	Sample Result	Dilution Factor	Date Extracted	Date Analyzed	Data Qualifiers
Sample ID: ISH0701-07RE1 (P1190-SP-6-500 - Water) - cont.					**Sampled: 08/07/09**				
Reporting Units: ug/l									
trans-1,3-Dichloropropene	EPA 8260B	9H12029	0.64	4.0	ND	2	08/12/09	08/12/09	
1,1-Dichloropropene	EPA 8260B	9H12029	0.56	4.0	ND	2	08/12/09	08/12/09	
1,2-Dichloro-1,1,2-trifluoroethane	EPA 8260B	9H12029	2.2	4.0	ND	2	08/12/09	08/12/09	
Ethylbenzene	EPA 8260B	9H12029	0.50	4.0	ND	2	08/12/09	08/12/09	
Hexachlorobutadiene	EPA 8260B	9H12029	0.76	10	ND	2	08/12/09	08/12/09	
2-Hexanone	EPA 8260B	9H12029	5.2	20	ND	2	08/12/09	08/12/09	
Isopropylbenzene	EPA 8260B	9H12029	0.50	4.0	ND	2	08/12/09	08/12/09	
p-Isopropyltoluene	EPA 8260B	9H12029	0.56	4.0	ND	2	08/12/09	08/12/09	
4-Methyl-2-pentanone (MIBK)	EPA 8260B	9H12029	7.0	20	ND	2	08/12/09	08/12/09	
Methylene chloride	EPA 8260B	9H12029	1.9	10	ND	2	08/12/09	08/12/09	
Naphthalene	EPA 8260B	9H12029	0.82	10	ND	2	08/12/09	08/12/09	
n-Propylbenzene	EPA 8260B	9H12029	0.54	4.0	ND	2	08/12/09	08/12/09	
Styrene	EPA 8260B	9H12029	0.40	4.0	ND	2	08/12/09	08/12/09	
1,1,1,2-Tetrachloroethane	EPA 8260B	9H12029	0.54	10	ND	2	08/12/09	08/12/09	
1,1,2,2-Tetrachloroethane	EPA 8260B	9H12029	0.60	2.0	ND	2	08/12/09	08/12/09	
Tetrachloroethene	EPA 8260B	9H12029	0.64	4.0	ND	2	08/12/09	08/12/09	
Toluene	EPA 8260B	9H12029	0.72	4.0	ND	2	08/12/09	08/12/09	
1,2,3-Trichlorobenzene	EPA 8260B	9H12029	0.60	10	ND	2	08/12/09	08/12/09	
1,2,4-Trichlorobenzene	EPA 8260B	9H12029	0.96	10	ND	2	08/12/09	08/12/09	
1,1,1-Trichloroethane	EPA 8260B	9H12029	0.60	4.0	ND	2	08/12/09	08/12/09	
1,1,2-Trichloroethane	EPA 8260B	9H12029	0.60	4.0	ND	2	08/12/09	08/12/09	
Trichloroethene	EPA 8260B	9H12029	0.52	4.0	ND	2	08/12/09	08/12/09	
Trichlorofluoromethane	EPA 8260B	9H12029	0.68	10	ND	2	08/12/09	08/12/09	
1,2,3-Trichloropropane	EPA 8260B	9H12029	0.80	20	ND	2	08/12/09	08/12/09	
1,2,4-Trimethylbenzene	EPA 8260B	9H12029	0.46	4.0	ND	2	08/12/09	08/12/09	
1,3,5-Trimethylbenzene	EPA 8260B	9H12029	0.52	4.0	ND	2	08/12/09	08/12/09	
Vinyl acetate	EPA 8260B	9H12029	2.0	10	ND	2	08/12/09	08/12/09	
Vinyl chloride	EPA 8260B	9H12029	0.80	1.0	ND	2	08/12/09	08/12/09	
m,p-Xylenes	EPA 8260B	9H12029	1.2	4.0	ND	2	08/12/09	08/12/09	
o-Xylene	EPA 8260B	9H12029	0.60	4.0	ND	2	08/12/09	08/12/09	
Xylenes, Total	EPA 8260B	9H12029	1.8	4.0	ND	2	08/12/09	08/12/09	
Surrogate: 4-Bromofluorobenzene (80-120%)					*106 %*				
Surrogate: Dibromofluoromethane (80-120%)					*109 %*				
Surrogate: Toluene-d8 (80-120%)					*103 %*				

TestAmerica Irvine

Joseph Doak
Project Manager

The results pertain only to the samples tested in the laboratory. This report shall not be reproduced, except in full, without written permission from TestAmerica.

TestAmerica
THE LEADER IN ENVIRONMENTAL TESTING

17461 Derian Avenue. Suite 100, Irvine, CA 92614 (949) 261-1022 Fax:(949) 260-3297

Applied Process Technology	Project ID:	Montrose-Torrance Bench Study	
3333 Vincent Road, Suite 222		P1190	Sampled: 08/07/09
Pleasant Hill, CA 94523	Report Number:	ISH0701	Received: 08/08/09
Attention: Keel Robinson			

VOLATILE ORGANICS by GC/MS (EPA 5030B/8260B)

Analyte	Method	Batch	MDL Limit	Reporting Limit	Sample Result	Dilution Factor	Date Extracted	Date Analyzed	Data Qualifiers
Sample ID: ISH0701-07RE2 (P1190-SP-6-500 - Water) - cont.					**Sampled: 08/07/09**				
Reporting Units: ug/l									
Acetone	EPA 8260B	9H14051	9.0	20	ND	2	08/14/09	08/14/09	
Surrogate: 4-Bromofluorobenzene (80-120%)					*99 %*				
Surrogate: Dibromofluoromethane (80-120%)					*94 %*				
Surrogate: Toluene-d8 (80-120%)					*104 %*				

TestAmerica Irvine

Joseph Doak
Project Manager

The results pertain only to the samples tested in the laboratory. This report shall not be reproduced, except in full, without written permission from TestAmerica.

TestAmerica
THE LEADER IN ENVIRONMENTAL TESTING
17461 Derian Avenue. Suite 100, Irvine, CA 92614 (949) 261-1022 Fax:(949) 260-3297

Applied Process Technology
3333 Vincent Road, Suite 222
Pleasant Hill, CA 94523
Attention: Keel Robinson

Project ID: Montrose-Torrance Bench Study
P1190
Report Number: ISH0701

Sampled: 08/07/09
Received: 08/08/09

VOLATILE ORGANICS by GC/MS (EPA 5030B/8260B)

Analyte	Method	Batch	MDL Limit	Reporting Limit	Sample Result	Dilution Factor	Date Extracted	Date Analyzed	Data Qualifiers
Sample ID: ISH0701-08 (P1190-SP-7-500 - Water)					**Sampled: 08/07/09**				
Reporting Units: ug/l									
Chlorobenzene	EPA 8260B	9H12029	3.6	20	**640**	10	08/12/09	08/12/09	
Surrogate: 4-Bromofluorobenzene (80-120%)					*105 %*				
Surrogate: Dibromofluoromethane (80-120%)					*110 %*				
Surrogate: Toluene-d8 (80-120%)					*105 %*				
Sample ID: ISH0701-08RE1 (P1190-SP-7-500 - Water)					**Sampled: 08/07/09**				
Reporting Units: ug/l									
Benzene	EPA 8260B	9H12029	0.56	4.0	**1.4**	2	08/12/09	08/12/09	J
Bromobenzene	EPA 8260B	9H12029	0.54	10	ND	2	08/12/09	08/12/09	
Bromochloromethane	EPA 8260B	9H12029	0.80	10	ND	2	08/12/09	08/12/09	
Bromodichloromethane	EPA 8260B	9H12029	0.60	4.0	ND	2	08/12/09	08/12/09	
Bromoform	EPA 8260B	9H12029	0.80	10	ND	2	08/12/09	08/12/09	
Bromomethane	EPA 8260B	9H12029	0.84	10	ND	2	08/12/09	08/12/09	
2-Butanone (MEK)	EPA 8260B	9H12029	9.4	20	ND	2	08/12/09	08/12/09	
n-Butylbenzene	EPA 8260B	9H12029	0.74	10	ND	2	08/12/09	08/12/09	
sec-Butylbenzene	EPA 8260B	9H12029	0.50	10	ND	2	08/12/09	08/12/09	
tert-Butylbenzene	EPA 8260B	9H12029	0.44	10	ND	2	08/12/09	08/12/09	
Carbon Disulfide	EPA 8260B	9H12029	0.96	2.0	ND	2	08/12/09	08/12/09	
Carbon tetrachloride	EPA 8260B	9H12029	0.56	1.0	ND	2	08/12/09	08/12/09	
Chloroethane	EPA 8260B	9H12029	0.80	10	ND	2	08/12/09	08/12/09	
Chloroform	EPA 8260B	9H12029	0.66	4.0	ND	2	08/12/09	08/12/09	
Chloromethane	EPA 8260B	9H12029	0.80	3.0	ND	2	08/12/09	08/12/09	
2-Chlorotoluene	EPA 8260B	9H12029	0.56	10	ND	2	08/12/09	08/12/09	
4-Chlorotoluene	EPA 8260B	9H12029	0.58	10	ND	2	08/12/09	08/12/09	
1,2-Dibromo-3-chloropropane	EPA 8260B	9H12029	1.9	10	ND	2	08/12/09	08/12/09	
Dibromochloromethane	EPA 8260B	9H12029	0.80	4.0	ND	2	08/12/09	08/12/09	
1,2-Dibromoethane (EDB)	EPA 8260B	9H12029	0.80	4.0	ND	2	08/12/09	08/12/09	
Dibromomethane	EPA 8260B	9H12029	0.72	4.0	ND	2	08/12/09	08/12/09	
1,2-Dichlorobenzene	EPA 8260B	9H12029	0.64	4.0	ND	2	08/12/09	08/12/09	
1,3-Dichlorobenzene	EPA 8260B	9H12029	0.70	4.0	ND	2	08/12/09	08/12/09	
1,4-Dichlorobenzene	EPA 8260B	9H12029	0.74	4.0	ND	2	08/12/09	08/12/09	
Dichlorodifluoromethane	EPA 8260B	9H12029	0.52	10	ND	2	08/12/09	08/12/09	
1,1-Dichloroethane	EPA 8260B	9H12029	0.80	4.0	ND	2	08/12/09	08/12/09	
1,2-Dichloroethane	EPA 8260B	9H12029	0.56	1.0	**1.7**	2	08/12/09	08/12/09	
1,1-Dichloroethene	EPA 8260B	9H12029	0.84	10	ND	2	08/12/09	08/12/09	
cis-1,2-Dichloroethene	EPA 8260B	9H12029	0.64	4.0	ND	2	08/12/09	08/12/09	
trans-1,2-Dichloroethene	EPA 8260B	9H12029	0.60	4.0	ND	2	08/12/09	08/12/09	
1,2-Dichloropropane	EPA 8260B	9H12029	0.70	4.0	ND	2	08/12/09	08/12/09	
1,3-Dichloropropane	EPA 8260B	9H12029	0.64	4.0	ND	2	08/12/09	08/12/09	
2,2-Dichloropropane	EPA 8260B	9H12029	0.68	4.0	ND	2	08/12/09	08/12/09	
cis-1,3-Dichloropropene	EPA 8260B	9H12029	0.44	4.0	ND	2	08/12/09	08/12/09	

TestAmerica Irvine

Joseph Doak
Project Manager

The results pertain only to the samples tested in the laboratory. This report shall not be reproduced, except in full, without written permission from TestAmerica.

TestAmerica
THE LEADER IN ENVIRONMENTAL TESTING

17461 Derian Avenue. Suite 100, Irvine, CA 92614 (949) 261-1022 Fax:(949) 260-3297

Applied Process Technology
3333 Vincent Road, Suite 222
Pleasant Hill, CA 94523
Attention: Keel Robinson

Project ID: Montrose-Torrance Bench Study
P1190
Report Number: ISH0701

Sampled: 08/07/09
Received: 08/08/09

VOLATILE ORGANICS by GC/MS (EPA 5030B/8260B)

Analyte	Method	Batch	MDL Limit	Reporting Limit	Sample Result	Dilution Factor	Date Extracted	Date Analyzed	Data Qualifiers
Sample ID: ISH0701-08RE1 (P1190-SP-7-500 - Water) - cont.					**Sampled: 08/07/09**				
Reporting Units: ug/l									
trans-1,3-Dichloropropene	EPA 8260B	9H12029	0.64	4.0	ND	2	08/12/09	08/12/09	
1,1-Dichloropropene	EPA 8260B	9H12029	0.56	4.0	ND	2	08/12/09	08/12/09	
1,2-Dichloro-1,1,2-trifluoroethane	EPA 8260B	9H12029	2.2	4.0	ND	2	08/12/09	08/12/09	
Ethylbenzene	EPA 8260B	9H12029	0.50	4.0	ND	2	08/12/09	08/12/09	
Hexachlorobutadiene	EPA 8260B	9H12029	0.76	10	ND	2	08/12/09	08/12/09	
2-Hexanone	EPA 8260B	9H12029	5.2	20	ND	2	08/12/09	08/12/09	
Isopropylbenzene	EPA 8260B	9H12029	0.50	4.0	ND	2	08/12/09	08/12/09	
p-Isopropyltoluene	EPA 8260B	9H12029	0.56	4.0	ND	2	08/12/09	08/12/09	
4-Methyl-2-pentanone (MIBK)	EPA 8260B	9H12029	7.0	20	ND	2	08/12/09	08/12/09	
Methylene chloride	EPA 8260B	9H12029	1.9	10	ND	2	08/12/09	08/12/09	
Naphthalene	EPA 8260B	9H12029	0.82	10	ND	2	08/12/09	08/12/09	
n-Propylbenzene	EPA 8260B	9H12029	0.54	4.0	ND	2	08/12/09	08/12/09	
Styrene	EPA 8260B	9H12029	0.40	4.0	ND	2	08/12/09	08/12/09	
1,1,1,2-Tetrachloroethane	EPA 8260B	9H12029	0.54	10	ND	2	08/12/09	08/12/09	
1,1,2,2-Tetrachloroethane	EPA 8260B	9H12029	0.60	2.0	ND	2	08/12/09	08/12/09	
Tetrachloroethene	EPA 8260B	9H12029	0.64	4.0	ND	2	08/12/09	08/12/09	
Toluene	EPA 8260B	9H12029	0.72	4.0	ND	2	08/12/09	08/12/09	
1,2,3-Trichlorobenzene	EPA 8260B	9H12029	0.60	10	ND	2	08/12/09	08/12/09	
1,2,4-Trichlorobenzene	EPA 8260B	9H12029	0.96	10	ND	2	08/12/09	08/12/09	
1,1,1-Trichloroethane	EPA 8260B	9H12029	0.60	4.0	ND	2	08/12/09	08/12/09	
1,1,2-Trichloroethane	EPA 8260B	9H12029	0.60	4.0	ND	2	08/12/09	08/12/09	
Trichloroethene	EPA 8260B	9H12029	0.52	4.0	ND	2	08/12/09	08/12/09	
Trichlorofluoromethane	EPA 8260B	9H12029	0.68	10	ND	2	08/12/09	08/12/09	
1,2,3-Trichloropropane	EPA 8260B	9H12029	0.80	20	ND	2	08/12/09	08/12/09	
1,2,4-Trimethylbenzene	EPA 8260B	9H12029	0.46	4.0	ND	2	08/12/09	08/12/09	
1,3,5-Trimethylbenzene	EPA 8260B	9H12029	0.52	4.0	ND	2	08/12/09	08/12/09	
Vinyl acetate	EPA 8260B	9H12029	2.0	10	ND	2	08/12/09	08/12/09	
Vinyl chloride	EPA 8260B	9H12029	0.80	1.0	ND	2	08/12/09	08/12/09	
m,p-Xylenes	EPA 8260B	9H12029	1.2	4.0	ND	2	08/12/09	08/12/09	
o-Xylene	EPA 8260B	9H12029	0.60	4.0	ND	2	08/12/09	08/12/09	
Xylenes, Total	EPA 8260B	9H12029	1.8	4.0	ND	2	08/12/09	08/12/09	
Surrogate: 4-Bromofluorobenzene (80-120%)					*106 %*				
Surrogate: Dibromofluoromethane (80-120%)					*109 %*				
Surrogate: Toluene-d8 (80-120%)					*102 %*				

TestAmerica Irvine

Joseph Doak
Project Manager

The results pertain only to the samples tested in the laboratory. This report shall not be reproduced, except in full, without written permission from TestAmerica.

TestAmerica
THE LEADER IN ENVIRONMENTAL TESTING

17461 Derian Avenue. Suite 100, Irvine, CA 92614 (949) 261-1022 Fax:(949) 260-3297

Applied Process Technology	Project ID:	Montrose-Torrance Bench Study	
3333 Vincent Road, Suite 222		P1190	Sampled: 08/07/09
Pleasant Hill, CA 94523	Report Number:	ISH0701	Received: 08/08/09
Attention: Keel Robinson			

VOLATILE ORGANICS by GC/MS (EPA 5030B/8260B)

Analyte	Method	Batch	MDL Limit	Reporting Limit	Sample Result	Dilution Factor	Date Extracted	Date Analyzed	Data Qualifiers
Sample ID: ISH0701-08RE2 (P1190-SP-7-500 - Water) - cont.					**Sampled: 08/07/09**				
Reporting Units: ug/l									
Acetone	EPA 8260B	9H14051	9.0	20	ND	2	08/14/09	08/14/09	
Surrogate: 4-Bromofluorobenzene (80-120%)					*101 %*				
Surrogate: Dibromofluoromethane (80-120%)					*95 %*				
Surrogate: Toluene-d8 (80-120%)					*104 %*				

TestAmerica Irvine

Joseph Doak
Project Manager

The results pertain only to the samples tested in the laboratory. This report shall not be reproduced, except in full, without written permission from TestAmerica.

TestAmerica
THE LEADER IN ENVIRONMENTAL TESTING
17461 Derian Avenue. Suite 100, Irvine, CA 92614 (949) 261-1022 Fax:(949) 260-3297

Applied Process Technology
3333 Vincent Road, Suite 222
Pleasant Hill, CA 94523
Attention: Keel Robinson

Project ID: Montrose-Torrance Bench Study
P1190
Report Number: ISH0701

Sampled: 08/07/09
Received: 08/08/09

VOLATILE ORGANICS by GC/MS (EPA 5030B/8260B)

Analyte	Method	Batch	MDL Limit	Reporting Limit	Sample Result	Dilution Factor	Date Extracted	Date Analyzed	Data Qualifiers
Sample ID: ISH0701-09 (P1190-SP-8-550 - Water)					**Sampled: 08/07/09**				
Reporting Units: ug/l									
Chlorobenzene	EPA 8260B	9H12029	1.8	10	**320**	5	08/12/09	08/12/09	
Surrogate: 4-Bromofluorobenzene (80-120%)					*102 %*				
Surrogate: Dibromofluoromethane (80-120%)					*109 %*				
Surrogate: Toluene-d8 (80-120%)					*103 %*				
Sample ID: ISH0701-09RE1 (P1190-SP-8-550 - Water)					**Sampled: 08/07/09**				
Reporting Units: ug/l									
Benzene	EPA 8260B	9H12029	0.28	2.0	**0.69**	1	08/12/09	08/12/09	J
Bromobenzene	EPA 8260B	9H12029	0.27	5.0	ND	1	08/12/09	08/12/09	
Bromochloromethane	EPA 8260B	9H12029	0.40	5.0	ND	1	08/12/09	08/12/09	
Bromodichloromethane	EPA 8260B	9H12029	0.30	2.0	ND	1	08/12/09	08/12/09	
Bromoform	EPA 8260B	9H12029	0.40	5.0	ND	1	08/12/09	08/12/09	
Bromomethane	EPA 8260B	9H12029	0.42	5.0	ND	1	08/12/09	08/12/09	
2-Butanone (MEK)	EPA 8260B	9H12029	4.7	10	ND	1	08/12/09	08/12/09	
n-Butylbenzene	EPA 8260B	9H12029	0.37	5.0	ND	1	08/12/09	08/12/09	
sec-Butylbenzene	EPA 8260B	9H12029	0.25	5.0	ND	1	08/12/09	08/12/09	
tert-Butylbenzene	EPA 8260B	9H12029	0.22	5.0	ND	1	08/12/09	08/12/09	
Carbon Disulfide	EPA 8260B	9H12029	0.48	1.0	ND	1	08/12/09	08/12/09	
Carbon tetrachloride	EPA 8260B	9H12029	0.28	0.50	ND	1	08/12/09	08/12/09	
Chloroethane	EPA 8260B	9H12029	0.40	5.0	ND	1	08/12/09	08/12/09	
Chloroform	EPA 8260B	9H12029	0.33	2.0	**0.44**	1	08/12/09	08/12/09	J
Chloromethane	EPA 8260B	9H12029	0.40	1.5	ND	1	08/12/09	08/12/09	
2-Chlorotoluene	EPA 8260B	9H12029	0.28	5.0	ND	1	08/12/09	08/12/09	
4-Chlorotoluene	EPA 8260B	9H12029	0.29	5.0	ND	1	08/12/09	08/12/09	
1,2-Dibromo-3-chloropropane	EPA 8260B	9H12029	0.97	5.0	ND	1	08/12/09	08/12/09	
Dibromochloromethane	EPA 8260B	9H12029	0.40	2.0	ND	1	08/12/09	08/12/09	
1,2-Dibromoethane (EDB)	EPA 8260B	9H12029	0.40	2.0	ND	1	08/12/09	08/12/09	
Dibromomethane	EPA 8260B	9H12029	0.36	2.0	ND	1	08/12/09	08/12/09	
1,2-Dichlorobenzene	EPA 8260B	9H12029	0.32	2.0	ND	1	08/12/09	08/12/09	
1,3-Dichlorobenzene	EPA 8260B	9H12029	0.35	2.0	ND	1	08/12/09	08/12/09	
1,4-Dichlorobenzene	EPA 8260B	9H12029	0.37	2.0	ND	1	08/12/09	08/12/09	
Dichlorodifluoromethane	EPA 8260B	9H12029	0.26	5.0	ND	1	08/12/09	08/12/09	
1,1-Dichloroethane	EPA 8260B	9H12029	0.40	2.0	ND	1	08/12/09	08/12/09	
1,2-Dichloroethane	EPA 8260B	9H12029	0.28	0.50	**1.9**	1	08/12/09	08/12/09	
1,1-Dichloroethene	EPA 8260B	9H12029	0.42	5.0	ND	1	08/12/09	08/12/09	
cis-1,2-Dichloroethene	EPA 8260B	9H12029	0.32	2.0	ND	1	08/12/09	08/12/09	
trans-1,2-Dichloroethene	EPA 8260B	9H12029	0.30	2.0	ND	1	08/12/09	08/12/09	
1,2-Dichloropropane	EPA 8260B	9H12029	0.35	2.0	ND	1	08/12/09	08/12/09	
1,3-Dichloropropane	EPA 8260B	9H12029	0.32	2.0	ND	1	08/12/09	08/12/09	
2,2-Dichloropropane	EPA 8260B	9H12029	0.34	2.0	ND	1	08/12/09	08/12/09	
cis-1,3-Dichloropropene	EPA 8260B	9H12029	0.22	2.0	ND	1	08/12/09	08/12/09	

TestAmerica Irvine

Joseph Doak
Project Manager

The results pertain only to the samples tested in the laboratory. This report shall not be reproduced, except in full, without written permission from TestAmerica.

TestAmerica
THE LEADER IN ENVIRONMENTAL TESTING

17461 Derian Avenue. Suite 100, Irvine, CA 92614 (949) 261-1022 Fax:(949) 260-3297

Applied Process Technology
3333 Vincent Road, Suite 222
Pleasant Hill, CA 94523
Attention: Keel Robinson

Project ID: Montrose-Torrance Bench Study
P1190
Report Number: ISH0701

Sampled: 08/07/09
Received: 08/08/09

VOLATILE ORGANICS by GC/MS (EPA 5030B/8260B)

Analyte	Method	Batch	MDL Limit	Reporting Limit	Sample Result	Dilution Factor	Date Extracted	Date Analyzed	Data Qualifiers
Sample ID: ISH0701-09RE1 (P1190-SP-8-550 - Water) - cont.					**Sampled: 08/07/09**				
Reporting Units: ug/l									
trans-1,3-Dichloropropene	EPA 8260B	9H12029	0.32	2.0	ND	1	08/12/09	08/12/09	
1,1-Dichloropropene	EPA 8260B	9H12029	0.28	2.0	ND	1	08/12/09	08/12/09	
1,2-Dichloro-1,1,2-trifluoroethane	EPA 8260B	9H12029	1.1	2.0	ND	1	08/12/09	08/12/09	
Ethylbenzene	EPA 8260B	9H12029	0.25	2.0	ND	1	08/12/09	08/12/09	
Hexachlorobutadiene	EPA 8260B	9H12029	0.38	5.0	ND	1	08/12/09	08/12/09	
2-Hexanone	EPA 8260B	9H12029	2.6	10	ND	1	08/12/09	08/12/09	
Isopropylbenzene	EPA 8260B	9H12029	0.25	2.0	ND	1	08/12/09	08/12/09	
p-Isopropyltoluene	EPA 8260B	9H12029	0.28	2.0	ND	1	08/12/09	08/12/09	
4-Methyl-2-pentanone (MIBK)	EPA 8260B	9H12029	3.5	10	ND	1	08/12/09	08/12/09	
Methylene chloride	EPA 8260B	9H12029	0.95	5.0	ND	1	08/12/09	08/12/09	
Naphthalene	EPA 8260B	9H12029	0.41	5.0	ND	1	08/12/09	08/12/09	
n-Propylbenzene	EPA 8260B	9H12029	0.27	2.0	ND	1	08/12/09	08/12/09	
Styrene	EPA 8260B	9H12029	0.20	2.0	ND	1	08/12/09	08/12/09	
1,1,1,2-Tetrachloroethane	EPA 8260B	9H12029	0.27	5.0	ND	1	08/12/09	08/12/09	
1,1,2,2-Tetrachloroethane	EPA 8260B	9H12029	0.30	1.0	ND	1	08/12/09	08/12/09	
Tetrachloroethene	EPA 8260B	9H12029	0.32	2.0	ND	1	08/12/09	08/12/09	
Toluene	EPA 8260B	9H12029	0.36	2.0	ND	1	08/12/09	08/12/09	
1,2,3-Trichlorobenzene	EPA 8260B	9H12029	0.30	5.0	ND	1	08/12/09	08/12/09	
1,2,4-Trichlorobenzene	EPA 8260B	9H12029	0.48	5.0	ND	1	08/12/09	08/12/09	
1,1,1-Trichloroethane	EPA 8260B	9H12029	0.30	2.0	ND	1	08/12/09	08/12/09	
1,1,2-Trichloroethane	EPA 8260B	9H12029	0.30	2.0	ND	1	08/12/09	08/12/09	
Trichloroethene	EPA 8260B	9H12029	0.26	2.0	ND	1	08/12/09	08/12/09	
Trichlorofluoromethane	EPA 8260B	9H12029	0.34	5.0	ND	1	08/12/09	08/12/09	
1,2,3-Trichloropropane	EPA 8260B	9H12029	0.40	10	ND	1	08/12/09	08/12/09	
1,2,4-Trimethylbenzene	EPA 8260B	9H12029	0.23	2.0	ND	1	08/12/09	08/12/09	
1,3,5-Trimethylbenzene	EPA 8260B	9H12029	0.26	2.0	ND	1	08/12/09	08/12/09	
Vinyl acetate	EPA 8260B	9H12029	1.0	5.0	ND	1	08/12/09	08/12/09	
Vinyl chloride	EPA 8260B	9H12029	0.40	0.50	ND	1	08/12/09	08/12/09	
m,p-Xylenes	EPA 8260B	9H12029	0.60	2.0	ND	1	08/12/09	08/12/09	
o-Xylene	EPA 8260B	9H12029	0.30	2.0	ND	1	08/12/09	08/12/09	
Xylenes, Total	EPA 8260B	9H12029	0.90	2.0	ND	1	08/12/09	08/12/09	
Surrogate: 4-Bromofluorobenzene (80-120%)					*107 %*				
Surrogate: Dibromofluoromethane (80-120%)					*114 %*				
Surrogate: Toluene-d8 (80-120%)					*102 %*				

TestAmerica Irvine

Joseph Doak
Project Manager

The results pertain only to the samples tested in the laboratory. This report shall not be reproduced, except in full, without written permission from TestAmerica.

TestAmerica
THE LEADER IN ENVIRONMENTAL TESTING

17461 Derian Avenue. Suite 100, Irvine, CA 92614 (949) 261-1022 Fax:(949) 260-3297

Applied Process Technology	Project ID:	Montrose-Torrance Bench Study	
3333 Vincent Road, Suite 222		P1190	Sampled: 08/07/09
Pleasant Hill, CA 94523	Report Number:	ISH0701	Received: 08/08/09
Attention: Keel Robinson			

VOLATILE ORGANICS by GC/MS (EPA 5030B/8260B)

Analyte	Method	Batch	MDL Limit	Reporting Limit	Sample Result	Dilution Factor	Date Extracted	Date Analyzed	Data Qualifiers
Sample ID: ISH0701-09RE2 (P1190-SP-8-550 - Water) - cont.					**Sampled: 08/07/09**				
Reporting Units: ug/l									
Acetone	EPA 8260B	9H15008	4.5	10	**6.8**	1	08/15/09	08/15/09	J
Surrogate: 4-Bromofluorobenzene (80-120%)					*97 %*				
Surrogate: Dibromofluoromethane (80-120%)					*95 %*				
Surrogate: Toluene-d8 (80-120%)					*107 %*				

TestAmerica Irvine

Joseph Doak
Project Manager

The results pertain only to the samples tested in the laboratory. This report shall not be reproduced, except in full, without written permission from TestAmerica.

TestAmerica
THE LEADER IN ENVIRONMENTAL TESTING
17461 Derian Avenue. Suite 100, Irvine, CA 92614 (949) 261-1022 Fax:(949) 260-3297

Applied Process Technology
3333 Vincent Road, Suite 222
Pleasant Hill, CA 94523
Attention: Keel Robinson

Project ID: Montrose-Torrance Bench Study
P1190
Report Number: ISH0701

Sampled: 08/07/09
Received: 08/08/09

VOLATILE ORGANICS by GC/MS (EPA 5030B/8260B)

Analyte	Method	Batch	MDL Limit	Reporting Limit	Sample Result	Dilution Factor	Date Extracted	Date Analyzed	Data Qualifiers
Sample ID: ISH0701-10 (P1190-SP-9-550 - Water)					**Sampled: 08/07/09**				
Reporting Units: ug/l									
Chlorobenzene	EPA 8260B	9H12029	3.6	20	**500**	10	08/12/09	08/12/09	
Surrogate: 4-Bromofluorobenzene (80-120%)					*104 %*				
Surrogate: Dibromofluoromethane (80-120%)					*110 %*				
Surrogate: Toluene-d8 (80-120%)					*104 %*				
Sample ID: ISH0701-10RE1 (P1190-SP-9-550 - Water)					**Sampled: 08/07/09**				
Reporting Units: ug/l									
Benzene	EPA 8260B	9H12029	0.56	4.0	**1.0**	2	08/12/09	08/12/09	J
Bromobenzene	EPA 8260B	9H12029	0.54	10	ND	2	08/12/09	08/12/09	
Bromochloromethane	EPA 8260B	9H12029	0.80	10	ND	2	08/12/09	08/12/09	
Bromodichloromethane	EPA 8260B	9H12029	0.60	4.0	ND	2	08/12/09	08/12/09	
Bromoform	EPA 8260B	9H12029	0.80	10	ND	2	08/12/09	08/12/09	
Bromomethane	EPA 8260B	9H12029	0.84	10	ND	2	08/12/09	08/12/09	
2-Butanone (MEK)	EPA 8260B	9H12029	9.4	20	ND	2	08/12/09	08/12/09	
n-Butylbenzene	EPA 8260B	9H12029	0.74	10	ND	2	08/12/09	08/12/09	
sec-Butylbenzene	EPA 8260B	9H12029	0.50	10	ND	2	08/12/09	08/12/09	
tert-Butylbenzene	EPA 8260B	9H12029	0.44	10	ND	2	08/12/09	08/12/09	
Carbon Disulfide	EPA 8260B	9H12029	0.96	2.0	ND	2	08/12/09	08/12/09	
Carbon tetrachloride	EPA 8260B	9H12029	0.56	1.0	ND	2	08/12/09	08/12/09	
Chloroethane	EPA 8260B	9H12029	0.80	10	ND	2	08/12/09	08/12/09	
Chloroform	EPA 8260B	9H12029	0.66	4.0	ND	2	08/12/09	08/12/09	
Chloromethane	EPA 8260B	9H12029	0.80	3.0	ND	2	08/12/09	08/12/09	
2-Chlorotoluene	EPA 8260B	9H12029	0.56	10	ND	2	08/12/09	08/12/09	
4-Chlorotoluene	EPA 8260B	9H12029	0.58	10	ND	2	08/12/09	08/12/09	
1,2-Dibromo-3-chloropropane	EPA 8260B	9H12029	1.9	10	ND	2	08/12/09	08/12/09	
Dibromochloromethane	EPA 8260B	9H12029	0.80	4.0	ND	2	08/12/09	08/12/09	
1,2-Dibromoethane (EDB)	EPA 8260B	9H12029	0.80	4.0	ND	2	08/12/09	08/12/09	
Dibromomethane	EPA 8260B	9H12029	0.72	4.0	ND	2	08/12/09	08/12/09	
1,2-Dichlorobenzene	EPA 8260B	9H12029	0.64	4.0	ND	2	08/12/09	08/12/09	
1,3-Dichlorobenzene	EPA 8260B	9H12029	0.70	4.0	ND	2	08/12/09	08/12/09	
1,4-Dichlorobenzene	EPA 8260B	9H12029	0.74	4.0	ND	2	08/12/09	08/12/09	
Dichlorodifluoromethane	EPA 8260B	9H12029	0.52	10	ND	2	08/12/09	08/12/09	
1,1-Dichloroethane	EPA 8260B	9H12029	0.80	4.0	ND	2	08/12/09	08/12/09	
1,2-Dichloroethane	EPA 8260B	9H12029	0.56	1.0	**1.9**	2	08/12/09	08/12/09	
1,1-Dichloroethene	EPA 8260B	9H12029	0.84	10	ND	2	08/12/09	08/12/09	
cis-1,2-Dichloroethene	EPA 8260B	9H12029	0.64	4.0	ND	2	08/12/09	08/12/09	
trans-1,2-Dichloroethene	EPA 8260B	9H12029	0.60	4.0	ND	2	08/12/09	08/12/09	
1,2-Dichloropropane	EPA 8260B	9H12029	0.70	4.0	ND	2	08/12/09	08/12/09	
1,3-Dichloropropane	EPA 8260B	9H12029	0.64	4.0	ND	2	08/12/09	08/12/09	
2,2-Dichloropropane	EPA 8260B	9H12029	0.68	4.0	ND	2	08/12/09	08/12/09	
cis-1,3-Dichloropropene	EPA 8260B	9H12029	0.44	4.0	ND	2	08/12/09	08/12/09	

TestAmerica Irvine

Joseph Doak
Project Manager

The results pertain only to the samples tested in the laboratory. This report shall not be reproduced, except in full, without written permission from TestAmerica.

TestAmerica
THE LEADER IN ENVIRONMENTAL TESTING

17461 Derian Avenue. Suite 100, Irvine, CA 92614 (949) 261-1022 Fax:(949) 260-3297

Applied Process Technology
3333 Vincent Road, Suite 222
Pleasant Hill, CA 94523
Attention: Keel Robinson

Project ID: Montrose-Torrance Bench Study
P1190
Report Number: ISH0701

Sampled: 08/07/09
Received: 08/08/09

VOLATILE ORGANICS by GC/MS (EPA 5030B/8260B)

Analyte	Method	Batch	MDL Limit	Reporting Limit	Sample Result	Dilution Factor	Date Extracted	Date Analyzed	Data Qualifiers
Sample ID: ISH0701-10RE1 (P1190-SP-9-550 - Water) - cont.					**Sampled: 08/07/09**				
Reporting Units: ug/l									
trans-1,3-Dichloropropene	EPA 8260B	9H12029	0.64	4.0	ND	2	08/12/09	08/12/09	
1,1-Dichloropropene	EPA 8260B	9H12029	0.56	4.0	ND	2	08/12/09	08/12/09	
1,2-Dichloro-1,1,2-trifluoroethane	EPA 8260B	9H12029	2.2	4.0	ND	2	08/12/09	08/12/09	
Ethylbenzene	EPA 8260B	9H12029	0.50	4.0	ND	2	08/12/09	08/12/09	
Hexachlorobutadiene	EPA 8260B	9H12029	0.76	10	ND	2	08/12/09	08/12/09	
2-Hexanone	EPA 8260B	9H12029	5.2	20	ND	2	08/12/09	08/12/09	
Isopropylbenzene	EPA 8260B	9H12029	0.50	4.0	ND	2	08/12/09	08/12/09	
p-Isopropyltoluene	EPA 8260B	9H12029	0.56	4.0	ND	2	08/12/09	08/12/09	
4-Methyl-2-pentanone (MIBK)	EPA 8260B	9H12029	7.0	20	ND	2	08/12/09	08/12/09	
Methylene chloride	EPA 8260B	9H12029	1.9	10	ND	2	08/12/09	08/12/09	
Naphthalene	EPA 8260B	9H12029	0.82	10	ND	2	08/12/09	08/12/09	
n-Propylbenzene	EPA 8260B	9H12029	0.54	4.0	ND	2	08/12/09	08/12/09	
Styrene	EPA 8260B	9H12029	0.40	4.0	ND	2	08/12/09	08/12/09	
1,1,1,2-Tetrachloroethane	EPA 8260B	9H12029	0.54	10	ND	2	08/12/09	08/12/09	
1,1,2,2-Tetrachloroethane	EPA 8260B	9H12029	0.60	2.0	ND	2	08/12/09	08/12/09	
Tetrachloroethene	EPA 8260B	9H12029	0.64	4.0	ND	2	08/12/09	08/12/09	
Toluene	EPA 8260B	9H12029	0.72	4.0	ND	2	08/12/09	08/12/09	
1,2,3-Trichlorobenzene	EPA 8260B	9H12029	0.60	10	ND	2	08/12/09	08/12/09	
1,2,4-Trichlorobenzene	EPA 8260B	9H12029	0.96	10	ND	2	08/12/09	08/12/09	
1,1,1-Trichloroethane	EPA 8260B	9H12029	0.60	4.0	ND	2	08/12/09	08/12/09	
1,1,2-Trichloroethane	EPA 8260B	9H12029	0.60	4.0	ND	2	08/12/09	08/12/09	
Trichloroethene	EPA 8260B	9H12029	0.52	4.0	ND	2	08/12/09	08/12/09	
Trichlorofluoromethane	EPA 8260B	9H12029	0.68	10	ND	2	08/12/09	08/12/09	
1,2,3-Trichloropropane	EPA 8260B	9H12029	0.80	20	ND	2	08/12/09	08/12/09	
1,2,4-Trimethylbenzene	EPA 8260B	9H12029	0.46	4.0	ND	2	08/12/09	08/12/09	
1,3,5-Trimethylbenzene	EPA 8260B	9H12029	0.52	4.0	ND	2	08/12/09	08/12/09	
Vinyl acetate	EPA 8260B	9H12029	2.0	10	ND	2	08/12/09	08/12/09	
Vinyl chloride	EPA 8260B	9H12029	0.80	1.0	ND	2	08/12/09	08/12/09	
m,p-Xylenes	EPA 8260B	9H12029	1.2	4.0	ND	2	08/12/09	08/12/09	
o-Xylene	EPA 8260B	9H12029	0.60	4.0	ND	2	08/12/09	08/12/09	
Xylenes, Total	EPA 8260B	9H12029	1.8	4.0	ND	2	08/12/09	08/12/09	
Surrogate: 4-Bromofluorobenzene (80-120%)					*105 %*				
Surrogate: Dibromofluoromethane (80-120%)					*114 %*				
Surrogate: Toluene-d8 (80-120%)					*103 %*				

TestAmerica Irvine

Joseph Doak
Project Manager

The results pertain only to the samples tested in the laboratory. This report shall not be reproduced, except in full, without written permission from TestAmerica.

TestAmerica
THE LEADER IN ENVIRONMENTAL TESTING

17461 Derian Avenue. Suite 100, Irvine, CA 92614 (949) 261-1022 Fax:(949) 260-3297

Applied Process Technology	Project ID:	Montrose-Torrance Bench Study	
3333 Vincent Road, Suite 222		P1190	Sampled: 08/07/09
Pleasant Hill, CA 94523	Report Number:	ISH0701	Received: 08/08/09
Attention: Keel Robinson			

VOLATILE ORGANICS by GC/MS (EPA 5030B/8260B)

Analyte	Method	Batch	MDL Limit	Reporting Limit	Sample Result	Dilution Factor	Date Extracted	Date Analyzed	Data Qualifiers
Sample ID: ISH0701-10RE2 (P1190-SP-9-550 - Water) - cont.					**Sampled: 08/07/09**				
Reporting Units: ug/l									
Acetone	EPA 8260B	9H15008	9.0	20	ND	2	08/15/09	08/15/09	
Surrogate: 4-Bromofluorobenzene (80-120%)					*100 %*				
Surrogate: Dibromofluoromethane (80-120%)					*98 %*				
Surrogate: Toluene-d8 (80-120%)					*106 %*				

TestAmerica Irvine

Joseph Doak
Project Manager

The results pertain only to the samples tested in the laboratory. This report shall not be reproduced, except in full, without written permission from TestAmerica.

TestAmerica
THE LEADER IN ENVIRONMENTAL TESTING

17461 Derian Avenue. Suite 100, Irvine, CA 92614 (949) 261-1022 Fax:(949) 260-3297

Applied Process Technology
3333 Vincent Road, Suite 222
Pleasant Hill, CA 94523
Attention: Keel Robinson

Project ID: Montrose-Torrance Bench Study
P1190
Report Number: ISH0701

Sampled: 08/07/09
Received: 08/08/09

VOLATILE ORGANICS by GC/MS (EPA 5030B/8260B)

Analyte	Method	Batch	MDL Limit	Reporting Limit	Sample Result	Dilution Factor	Date Extracted	Date Analyzed	Data Qualifiers
Sample ID: ISH0701-11 (P1190-SP-10-550 - Water)					**Sampled: 08/07/09**				
Reporting Units: ug/l									
Chlorobenzene	EPA 8260B	9H12029	3.6	20	**570**	10	08/12/09	08/12/09	
Surrogate: 4-Bromofluorobenzene (80-120%)					*104 %*				
Surrogate: Dibromofluoromethane (80-120%)					*111 %*				
Surrogate: Toluene-d8 (80-120%)					*105 %*				
Sample ID: ISH0701-11RE1 (P1190-SP-10-550 - Water)					**Sampled: 08/07/09**				
Reporting Units: ug/l									
Benzene	EPA 8260B	9H12029	0.56	4.0	**1.2**	2	08/12/09	08/12/09	J
Bromobenzene	EPA 8260B	9H12029	0.54	10	ND	2	08/12/09	08/12/09	
Bromochloromethane	EPA 8260B	9H12029	0.80	10	ND	2	08/12/09	08/12/09	
Bromodichloromethane	EPA 8260B	9H12029	0.60	4.0	ND	2	08/12/09	08/12/09	
Bromoform	EPA 8260B	9H12029	0.80	10	ND	2	08/12/09	08/12/09	
Bromomethane	EPA 8260B	9H12029	0.84	10	ND	2	08/12/09	08/12/09	
2-Butanone (MEK)	EPA 8260B	9H12029	9.4	20	ND	2	08/12/09	08/12/09	
n-Butylbenzene	EPA 8260B	9H12029	0.74	10	ND	2	08/12/09	08/12/09	
sec-Butylbenzene	EPA 8260B	9H12029	0.50	10	ND	2	08/12/09	08/12/09	
tert-Butylbenzene	EPA 8260B	9H12029	0.44	10	ND	2	08/12/09	08/12/09	
Carbon Disulfide	EPA 8260B	9H12029	0.96	2.0	ND	2	08/12/09	08/12/09	
Carbon tetrachloride	EPA 8260B	9H12029	0.56	1.0	ND	2	08/12/09	08/12/09	
Chloroethane	EPA 8260B	9H12029	0.80	10	ND	2	08/12/09	08/12/09	
Chloroform	EPA 8260B	9H12029	0.66	4.0	ND	2	08/12/09	08/12/09	
Chloromethane	EPA 8260B	9H12029	0.80	3.0	ND	2	08/12/09	08/12/09	
2-Chlorotoluene	EPA 8260B	9H12029	0.56	10	ND	2	08/12/09	08/12/09	
4-Chlorotoluene	EPA 8260B	9H12029	0.58	10	ND	2	08/12/09	08/12/09	
1,2-Dibromo-3-chloropropane	EPA 8260B	9H12029	1.9	10	ND	2	08/12/09	08/12/09	
Dibromochloromethane	EPA 8260B	9H12029	0.80	4.0	ND	2	08/12/09	08/12/09	
1,2-Dibromoethane (EDB)	EPA 8260B	9H12029	0.80	4.0	ND	2	08/12/09	08/12/09	
Dibromomethane	EPA 8260B	9H12029	0.72	4.0	ND	2	08/12/09	08/12/09	
1,2-Dichlorobenzene	EPA 8260B	9H12029	0.64	4.0	ND	2	08/12/09	08/12/09	
1,3-Dichlorobenzene	EPA 8260B	9H12029	0.70	4.0	ND	2	08/12/09	08/12/09	
1,4-Dichlorobenzene	EPA 8260B	9H12029	0.74	4.0	ND	2	08/12/09	08/12/09	
Dichlorodifluoromethane	EPA 8260B	9H12029	0.52	10	ND	2	08/12/09	08/12/09	
1,1-Dichloroethane	EPA 8260B	9H12029	0.80	4.0	ND	2	08/12/09	08/12/09	
1,2-Dichloroethane	EPA 8260B	9H12029	0.56	1.0	**1.8**	2	08/12/09	08/12/09	
1,1-Dichloroethene	EPA 8260B	9H12029	0.84	10	ND	2	08/12/09	08/12/09	
cis-1,2-Dichloroethene	EPA 8260B	9H12029	0.64	4.0	ND	2	08/12/09	08/12/09	
trans-1,2-Dichloroethene	EPA 8260B	9H12029	0.60	4.0	ND	2	08/12/09	08/12/09	
1,2-Dichloropropane	EPA 8260B	9H12029	0.70	4.0	ND	2	08/12/09	08/12/09	
1,3-Dichloropropane	EPA 8260B	9H12029	0.64	4.0	ND	2	08/12/09	08/12/09	
2,2-Dichloropropane	EPA 8260B	9H12029	0.68	4.0	ND	2	08/12/09	08/12/09	
cis-1,3-Dichloropropene	EPA 8260B	9H12029	0.44	4.0	ND	2	08/12/09	08/12/09	

TestAmerica Irvine

Joseph Doak
Project Manager

The results pertain only to the samples tested in the laboratory. This report shall not be reproduced, except in full, without written permission from TestAmerica.

TestAmerica
THE LEADER IN ENVIRONMENTAL TESTING

17461 Derian Avenue. Suite 100, Irvine, CA 92614 (949) 261-1022 Fax:(949) 260-3297

Applied Process Technology
3333 Vincent Road, Suite 222
Pleasant Hill, CA 94523
Attention: Keel Robinson

Project ID: Montrose-Torrance Bench Study
P1190
Report Number: ISH0701

Sampled: 08/07/09
Received: 08/08/09

VOLATILE ORGANICS by GC/MS (EPA 5030B/8260B)

Analyte	Method	Batch	MDL Limit	Reporting Limit	Sample Result	Dilution Factor	Date Extracted	Date Analyzed	Data Qualifiers
Sample ID: ISH0701-11RE1 (P1190-SP-10-550 - Water) - cont.					**Sampled: 08/07/09**				
Reporting Units: ug/l									
trans-1,3-Dichloropropene	EPA 8260B	9H12029	0.64	4.0	ND	2	08/12/09	08/12/09	
1,1-Dichloropropene	EPA 8260B	9H12029	0.56	4.0	ND	2	08/12/09	08/12/09	
1,2-Dichloro-1,1,2-trifluoroethane	EPA 8260B	9H12029	2.2	4.0	ND	2	08/12/09	08/12/09	
Ethylbenzene	EPA 8260B	9H12029	0.50	4.0	ND	2	08/12/09	08/12/09	
Hexachlorobutadiene	EPA 8260B	9H12029	0.76	10	ND	2	08/12/09	08/12/09	
2-Hexanone	EPA 8260B	9H12029	5.2	20	ND	2	08/12/09	08/12/09	
Isopropylbenzene	EPA 8260B	9H12029	0.50	4.0	ND	2	08/12/09	08/12/09	
p-Isopropyltoluene	EPA 8260B	9H12029	0.56	4.0	ND	2	08/12/09	08/12/09	
4-Methyl-2-pentanone (MIBK)	EPA 8260B	9H12029	7.0	20	ND	2	08/12/09	08/12/09	
Methylene chloride	EPA 8260B	9H12029	1.9	10	**2.2**	2	08/12/09	08/12/09	J
Naphthalene	EPA 8260B	9H12029	0.82	10	ND	2	08/12/09	08/12/09	
n-Propylbenzene	EPA 8260B	9H12029	0.54	4.0	ND	2	08/12/09	08/12/09	
Styrene	EPA 8260B	9H12029	0.40	4.0	ND	2	08/12/09	08/12/09	
1,1,1,2-Tetrachloroethane	EPA 8260B	9H12029	0.54	10	ND	2	08/12/09	08/12/09	
1,1,2,2-Tetrachloroethane	EPA 8260B	9H12029	0.60	2.0	ND	2	08/12/09	08/12/09	
Tetrachloroethene	EPA 8260B	9H12029	0.64	4.0	ND	2	08/12/09	08/12/09	
Toluene	EPA 8260B	9H12029	0.72	4.0	ND	2	08/12/09	08/12/09	
1,2,3-Trichlorobenzene	EPA 8260B	9H12029	0.60	10	ND	2	08/12/09	08/12/09	
1,2,4-Trichlorobenzene	EPA 8260B	9H12029	0.96	10	ND	2	08/12/09	08/12/09	
1,1,1-Trichloroethane	EPA 8260B	9H12029	0.60	4.0	ND	2	08/12/09	08/12/09	
1,1,2-Trichloroethane	EPA 8260B	9H12029	0.60	4.0	ND	2	08/12/09	08/12/09	
Trichloroethene	EPA 8260B	9H12029	0.52	4.0	ND	2	08/12/09	08/12/09	
Trichlorofluoromethane	EPA 8260B	9H12029	0.68	10	ND	2	08/12/09	08/12/09	
1,2,3-Trichloropropane	EPA 8260B	9H12029	0.80	20	ND	2	08/12/09	08/12/09	
1,2,4-Trimethylbenzene	EPA 8260B	9H12029	0.46	4.0	ND	2	08/12/09	08/12/09	
1,3,5-Trimethylbenzene	EPA 8260B	9H12029	0.52	4.0	ND	2	08/12/09	08/12/09	
Vinyl acetate	EPA 8260B	9H12029	2.0	10	ND	2	08/12/09	08/12/09	
Vinyl chloride	EPA 8260B	9H12029	0.80	1.0	ND	2	08/12/09	08/12/09	
m,p-Xylenes	EPA 8260B	9H12029	1.2	4.0	ND	2	08/12/09	08/12/09	
o-Xylene	EPA 8260B	9H12029	0.60	4.0	ND	2	08/12/09	08/12/09	
Xylenes, Total	EPA 8260B	9H12029	1.8	4.0	ND	2	08/12/09	08/12/09	
Surrogate: 4-Bromofluorobenzene (80-120%)					*105 %*				
Surrogate: Dibromofluoromethane (80-120%)					*114 %*				
Surrogate: Toluene-d8 (80-120%)					*104 %*				

TestAmerica Irvine

Joseph Doak
Project Manager

The results pertain only to the samples tested in the laboratory. This report shall not be reproduced, except in full, without written permission from TestAmerica.

TestAmerica
THE LEADER IN ENVIRONMENTAL TESTING

17461 Derian Avenue. Suite 100, Irvine, CA 92614 (949) 261-1022 Fax:(949) 260-3297

Applied Process Technology	Project ID:	Montrose-Torrance Bench Study	
3333 Vincent Road, Suite 222		P1190	Sampled: 08/07/09
Pleasant Hill, CA 94523	Report Number:	ISH0701	Received: 08/08/09
Attention: Keel Robinson			

VOLATILE ORGANICS by GC/MS (EPA 5030B/8260B)

Analyte	Method	Batch	MDL Limit	Reporting Limit	Sample Result	Dilution Factor	Date Extracted	Date Analyzed	Data Qualifiers
Sample ID: ISH0701-11RE2 (P1190-SP-10-550 - Water) - cont.					**Sampled: 08/07/09**				
Reporting Units: ug/l									
Acetone	EPA 8260B	9H15008	9.0	20	ND	2	08/15/09	08/15/09	
Surrogate: 4-Bromofluorobenzene (80-120%)					*99 %*				
Surrogate: Dibromofluoromethane (80-120%)					*99 %*				
Surrogate: Toluene-d8 (80-120%)					*112 %*				

TestAmerica Irvine

Joseph Doak
Project Manager

The results pertain only to the samples tested in the laboratory. This report shall not be reproduced, except in full, without written permission from TestAmerica.

TestAmerica
THE LEADER IN ENVIRONMENTAL TESTING
17461 Derian Avenue. Suite 100, Irvine, CA 92614 (949) 261-1022 Fax:(949) 260-3297

Applied Process Technology
3333 Vincent Road, Suite 222
Pleasant Hill, CA 94523
Attention: Keel Robinson

Project ID: Montrose-Torrance Bench Study
P1190
Report Number: ISH0701

Sampled: 08/07/09
Received: 08/08/09

VOLATILE ORGANICS by GC/MS (EPA 5030B/8260B)

Analyte	Method	Batch	MDL Limit	Reporting Limit	Sample Result	Dilution Factor	Date Extracted	Date Analyzed	Data Qualifiers
Sample ID: ISH0701-12 (P1190-SP-11-550 - Water)					**Sampled: 08/07/09**				
Reporting Units: ug/l									
Chlorobenzene	EPA 8260B	9H12029	3.6	20	**650**	10	08/12/09	08/12/09	
Surrogate: 4-Bromofluorobenzene (80-120%)					*103 %*				
Surrogate: Dibromofluoromethane (80-120%)					*114 %*				
Surrogate: Toluene-d8 (80-120%)					*103 %*				
Sample ID: ISH0701-12RE1 (P1190-SP-11-550 - Water)					**Sampled: 08/07/09**				
Reporting Units: ug/l									
Benzene	EPA 8260B	9H12029	0.56	4.0	**1.4**	2	08/12/09	08/12/09	J
Bromobenzene	EPA 8260B	9H12029	0.54	10	ND	2	08/12/09	08/12/09	
Bromochloromethane	EPA 8260B	9H12029	0.80	10	ND	2	08/12/09	08/12/09	
Bromodichloromethane	EPA 8260B	9H12029	0.60	4.0	ND	2	08/12/09	08/12/09	
Bromoform	EPA 8260B	9H12029	0.80	10	ND	2	08/12/09	08/12/09	
Bromomethane	EPA 8260B	9H12029	0.84	10	ND	2	08/12/09	08/12/09	
2-Butanone (MEK)	EPA 8260B	9H12029	9.4	20	ND	2	08/12/09	08/12/09	
n-Butylbenzene	EPA 8260B	9H12029	0.74	10	ND	2	08/12/09	08/12/09	
sec-Butylbenzene	EPA 8260B	9H12029	0.50	10	ND	2	08/12/09	08/12/09	
tert-Butylbenzene	EPA 8260B	9H12029	0.44	10	ND	2	08/12/09	08/12/09	
Carbon Disulfide	EPA 8260B	9H12029	0.96	2.0	ND	2	08/12/09	08/12/09	
Carbon tetrachloride	EPA 8260B	9H12029	0.56	1.0	ND	2	08/12/09	08/12/09	
Chloroethane	EPA 8260B	9H12029	0.80	10	ND	2	08/12/09	08/12/09	
Chloroform	EPA 8260B	9H12029	0.66	4.0	ND	2	08/12/09	08/12/09	
Chloromethane	EPA 8260B	9H12029	0.80	3.0	ND	2	08/12/09	08/12/09	
2-Chlorotoluene	EPA 8260B	9H12029	0.56	10	ND	2	08/12/09	08/12/09	
4-Chlorotoluene	EPA 8260B	9H12029	0.58	10	ND	2	08/12/09	08/12/09	
1,2-Dibromo-3-chloropropane	EPA 8260B	9H12029	1.9	10	ND	2	08/12/09	08/12/09	
Dibromochloromethane	EPA 8260B	9H12029	0.80	4.0	ND	2	08/12/09	08/12/09	
1,2-Dibromoethane (EDB)	EPA 8260B	9H12029	0.80	4.0	ND	2	08/12/09	08/12/09	
Dibromomethane	EPA 8260B	9H12029	0.72	4.0	ND	2	08/12/09	08/12/09	
1,2-Dichlorobenzene	EPA 8260B	9H12029	0.64	4.0	ND	2	08/12/09	08/12/09	
1,3-Dichlorobenzene	EPA 8260B	9H12029	0.70	4.0	ND	2	08/12/09	08/12/09	
1,4-Dichlorobenzene	EPA 8260B	9H12029	0.74	4.0	ND	2	08/12/09	08/12/09	
Dichlorodifluoromethane	EPA 8260B	9H12029	0.52	10	ND	2	08/12/09	08/12/09	
1,1-Dichloroethane	EPA 8260B	9H12029	0.80	4.0	ND	2	08/12/09	08/12/09	
1,2-Dichloroethane	EPA 8260B	9H12029	0.56	1.0	**1.8**	2	08/12/09	08/12/09	
1,1-Dichloroethene	EPA 8260B	9H12029	0.84	10	ND	2	08/12/09	08/12/09	
cis-1,2-Dichloroethene	EPA 8260B	9H12029	0.64	4.0	ND	2	08/12/09	08/12/09	
trans-1,2-Dichloroethene	EPA 8260B	9H12029	0.60	4.0	ND	2	08/12/09	08/12/09	
1,2-Dichloropropane	EPA 8260B	9H12029	0.70	4.0	ND	2	08/12/09	08/12/09	
1,3-Dichloropropane	EPA 8260B	9H12029	0.64	4.0	ND	2	08/12/09	08/12/09	
2,2-Dichloropropane	EPA 8260B	9H12029	0.68	4.0	ND	2	08/12/09	08/12/09	
cis-1,3-Dichloropropene	EPA 8260B	9H12029	0.44	4.0	ND	2	08/12/09	08/12/09	

TestAmerica Irvine

Joseph Doak
Project Manager

The results pertain only to the samples tested in the laboratory. This report shall not be reproduced, except in full, without written permission from TestAmerica.

TestAmerica
THE LEADER IN ENVIRONMENTAL TESTING

17461 Derian Avenue. Suite 100, Irvine, CA 92614 (949) 261-1022 Fax:(949) 260-3297

Applied Process Technology
3333 Vincent Road, Suite 222
Pleasant Hill, CA 94523
Attention: Keel Robinson

Project ID: Montrose-Torrance Bench Study
P1190
Report Number: ISH0701

Sampled: 08/07/09
Received: 08/08/09

VOLATILE ORGANICS by GC/MS (EPA 5030B/8260B)

Analyte	Method	Batch	MDL Limit	Reporting Limit	Sample Result	Dilution Factor	Date Extracted	Date Analyzed	Data Qualifiers
Sample ID: ISH0701-12RE1 (P1190-SP-11-550 - Water) - cont.					**Sampled: 08/07/09**				
Reporting Units: ug/l									
trans-1,3-Dichloropropene	EPA 8260B	9H12029	0.64	4.0	ND	2	08/12/09	08/12/09	
1,1-Dichloropropene	EPA 8260B	9H12029	0.56	4.0	ND	2	08/12/09	08/12/09	
1,2-Dichloro-1,1,2-trifluoroethane	EPA 8260B	9H12029	2.2	4.0	ND	2	08/12/09	08/12/09	
Ethylbenzene	EPA 8260B	9H12029	0.50	4.0	ND	2	08/12/09	08/12/09	
Hexachlorobutadiene	EPA 8260B	9H12029	0.76	10	ND	2	08/12/09	08/12/09	
2-Hexanone	EPA 8260B	9H12029	5.2	20	ND	2	08/12/09	08/12/09	
Isopropylbenzene	EPA 8260B	9H12029	0.50	4.0	ND	2	08/12/09	08/12/09	
p-Isopropyltoluene	EPA 8260B	9H12029	0.56	4.0	ND	2	08/12/09	08/12/09	
4-Methyl-2-pentanone (MIBK)	EPA 8260B	9H12029	7.0	20	ND	2	08/12/09	08/12/09	
Methylene chloride	EPA 8260B	9H12029	1.9	10	**2.3**	2	08/12/09	08/12/09	J
Naphthalene	EPA 8260B	9H12029	0.82	10	ND	2	08/12/09	08/12/09	
n-Propylbenzene	EPA 8260B	9H12029	0.54	4.0	ND	2	08/12/09	08/12/09	
Styrene	EPA 8260B	9H12029	0.40	4.0	ND	2	08/12/09	08/12/09	
1,1,1,2-Tetrachloroethane	EPA 8260B	9H12029	0.54	10	ND	2	08/12/09	08/12/09	
1,1,2,2-Tetrachloroethane	EPA 8260B	9H12029	0.60	2.0	ND	2	08/12/09	08/12/09	
Tetrachloroethene	EPA 8260B	9H12029	0.64	4.0	ND	2	08/12/09	08/12/09	
Toluene	EPA 8260B	9H12029	0.72	4.0	ND	2	08/12/09	08/12/09	
1,2,3-Trichlorobenzene	EPA 8260B	9H12029	0.60	10	ND	2	08/12/09	08/12/09	
1,2,4-Trichlorobenzene	EPA 8260B	9H12029	0.96	10	ND	2	08/12/09	08/12/09	
1,1,1-Trichloroethane	EPA 8260B	9H12029	0.60	4.0	ND	2	08/12/09	08/12/09	
1,1,2-Trichloroethane	EPA 8260B	9H12029	0.60	4.0	ND	2	08/12/09	08/12/09	
Trichloroethene	EPA 8260B	9H12029	0.52	4.0	ND	2	08/12/09	08/12/09	
Trichlorofluoromethane	EPA 8260B	9H12029	0.68	10	ND	2	08/12/09	08/12/09	
1,2,3-Trichloropropane	EPA 8260B	9H12029	0.80	20	ND	2	08/12/09	08/12/09	
1,2,4-Trimethylbenzene	EPA 8260B	9H12029	0.46	4.0	ND	2	08/12/09	08/12/09	
1,3,5-Trimethylbenzene	EPA 8260B	9H12029	0.52	4.0	ND	2	08/12/09	08/12/09	
Vinyl acetate	EPA 8260B	9H12029	2.0	10	ND	2	08/12/09	08/12/09	
Vinyl chloride	EPA 8260B	9H12029	0.80	1.0	ND	2	08/12/09	08/12/09	
m,p-Xylenes	EPA 8260B	9H12029	1.2	4.0	ND	2	08/12/09	08/12/09	
o-Xylene	EPA 8260B	9H12029	0.60	4.0	ND	2	08/12/09	08/12/09	
Xylenes, Total	EPA 8260B	9H12029	1.8	4.0	ND	2	08/12/09	08/12/09	
Surrogate: 4-Bromofluorobenzene (80-120%)					*105 %*				
Surrogate: Dibromofluoromethane (80-120%)					*113 %*				
Surrogate: Toluene-d8 (80-120%)					*102 %*				

TestAmerica Irvine

Joseph Doak
Project Manager

The results pertain only to the samples tested in the laboratory. This report shall not be reproduced, except in full, without written permission from TestAmerica.

TestAmerica
THE LEADER IN ENVIRONMENTAL TESTING

17461 Derian Avenue. Suite 100, Irvine, CA 92614 (949) 261-1022 Fax:(949) 260-3297

Applied Process Technology	Project ID:	Montrose-Torrance Bench Study	
3333 Vincent Road, Suite 222		P1190	Sampled: 08/07/09
Pleasant Hill, CA 94523	Report Number:	ISH0701	Received: 08/08/09
Attention: Keel Robinson			

VOLATILE ORGANICS by GC/MS (EPA 5030B/8260B)

Analyte	Method	Batch	MDL Limit	Reporting Limit	Sample Result	Dilution Factor	Date Extracted	Date Analyzed	Data Qualifiers
Sample ID: ISH0701-12RE2 (P1190-SP-11-550 - Water) - cont.					**Sampled: 08/07/09**				
Reporting Units: ug/l									
Acetone	EPA 8260B	9H15008	9.0	20	ND	2	08/15/09	08/15/09	
Surrogate: 4-Bromofluorobenzene (80-120%)					*97 %*				
Surrogate: Dibromofluoromethane (80-120%)					*98 %*				
Surrogate: Toluene-d8 (80-120%)					*105 %*				

TestAmerica Irvine

Joseph Doak
Project Manager

The results pertain only to the samples tested in the laboratory. This report shall not be reproduced, except in full, without written permission from TestAmerica.

TestAmerica
THE LEADER IN ENVIRONMENTAL TESTING
17461 Derian Avenue. Suite 100, Irvine, CA 92614 (949) 261-1022 Fax:(949) 260-3297

Applied Process Technology
3333 Vincent Road, Suite 222
Pleasant Hill, CA 94523
Attention: Keel Robinson

Project ID: Montrose-Torrance Bench Study
P1190
Report Number: ISH0701

Sampled: 08/07/09
Received: 08/08/09

VOLATILE ORGANICS by GC/MS (EPA 5030B/8260B)

Analyte	Method	Batch	MDL Limit	Reporting Limit	Sample Result	Dilution Factor	Date Extracted	Date Analyzed	Data Qualifiers
Sample ID: ISH0701-13 (P1190-SP-12-550 - Water)					**Sampled: 08/07/09**				
Reporting Units: ug/l									
Chlorobenzene	EPA 8260B	9H12034	3.6	20	**600**	10	08/12/09	08/12/09	
Surrogate: 4-Bromofluorobenzene (80-120%)					*104 %*				
Surrogate: Dibromofluoromethane (80-120%)					*110 %*				
Surrogate: Toluene-d8 (80-120%)					*106 %*				
Sample ID: ISH0701-13RE1 (P1190-SP-12-550 - Water)					**Sampled: 08/07/09**				
Reporting Units: ug/l									
Acetone	EPA 8260B	9H12034	9.0	20	ND	2	08/12/09	08/12/09	C
Benzene	EPA 8260B	9H12034	0.56	4.0	**1.4**	2	08/12/09	08/12/09	J
Bromobenzene	EPA 8260B	9H12034	0.54	10	ND	2	08/12/09	08/12/09	
Bromochloromethane	EPA 8260B	9H12034	0.80	10	ND	2	08/12/09	08/12/09	
Bromodichloromethane	EPA 8260B	9H12034	0.60	4.0	ND	2	08/12/09	08/12/09	
Bromoform	EPA 8260B	9H12034	0.80	10	ND	2	08/12/09	08/12/09	
Bromomethane	EPA 8260B	9H12034	0.84	10	ND	2	08/12/09	08/12/09	
2-Butanone (MEK)	EPA 8260B	9H12034	9.4	20	ND	2	08/12/09	08/12/09	
n-Butylbenzene	EPA 8260B	9H12034	0.74	10	ND	2	08/12/09	08/12/09	
sec-Butylbenzene	EPA 8260B	9H12034	0.50	10	ND	2	08/12/09	08/12/09	
tert-Butylbenzene	EPA 8260B	9H12034	0.44	10	ND	2	08/12/09	08/12/09	
Carbon Disulfide	EPA 8260B	9H12034	0.96	2.0	ND	2	08/12/09	08/12/09	
Carbon tetrachloride	EPA 8260B	9H12034	0.56	1.0	ND	2	08/12/09	08/12/09	
Chloroethane	EPA 8260B	9H12034	0.80	10	ND	2	08/12/09	08/12/09	
Chloroform	EPA 8260B	9H12034	0.66	4.0	ND	2	08/12/09	08/12/09	
Chloromethane	EPA 8260B	9H12034	0.80	3.0	ND	2	08/12/09	08/12/09	
2-Chlorotoluene	EPA 8260B	9H12034	0.56	10	ND	2	08/12/09	08/12/09	
4-Chlorotoluene	EPA 8260B	9H12034	0.58	10	ND	2	08/12/09	08/12/09	
1,2-Dibromo-3-chloropropane	EPA 8260B	9H12034	1.9	10	ND	2	08/12/09	08/12/09	
Dibromochloromethane	EPA 8260B	9H12034	0.80	4.0	ND	2	08/12/09	08/12/09	
1,2-Dibromoethane (EDB)	EPA 8260B	9H12034	0.80	4.0	ND	2	08/12/09	08/12/09	
Dibromomethane	EPA 8260B	9H12034	0.72	4.0	ND	2	08/12/09	08/12/09	
1,2-Dichlorobenzene	EPA 8260B	9H12034	0.64	4.0	ND	2	08/12/09	08/12/09	
1,3-Dichlorobenzene	EPA 8260B	9H12034	0.70	4.0	ND	2	08/12/09	08/12/09	
1,4-Dichlorobenzene	EPA 8260B	9H12034	0.74	4.0	ND	2	08/12/09	08/12/09	
Dichlorodifluoromethane	EPA 8260B	9H12034	0.52	10	ND	2	08/12/09	08/12/09	
1,1-Dichloroethane	EPA 8260B	9H12034	0.80	4.0	ND	2	08/12/09	08/12/09	
1,2-Dichloroethane	EPA 8260B	9H12034	0.56	1.0	**2.0**	2	08/12/09	08/12/09	
1,1-Dichloroethene	EPA 8260B	9H12034	0.84	10	ND	2	08/12/09	08/12/09	
cis-1,2-Dichloroethene	EPA 8260B	9H12034	0.64	4.0	ND	2	08/12/09	08/12/09	
trans-1,2-Dichloroethene	EPA 8260B	9H12034	0.60	4.0	ND	2	08/12/09	08/12/09	
1,2-Dichloropropane	EPA 8260B	9H12034	0.70	4.0	ND	2	08/12/09	08/12/09	
1,3-Dichloropropane	EPA 8260B	9H12034	0.64	4.0	ND	2	08/12/09	08/12/09	
2,2-Dichloropropane	EPA 8260B	9H12034	0.68	4.0	ND	2	08/12/09	08/12/09	

TestAmerica Irvine

Joseph Doak
Project Manager

The results pertain only to the samples tested in the laboratory. This report shall not be reproduced, except in full, without written permission from TestAmerica.

TestAmerica
THE LEADER IN ENVIRONMENTAL TESTING
17461 Derian Avenue. Suite 100, Irvine, CA 92614 (949) 261-1022 Fax:(949) 260-3297

Applied Process Technology
3333 Vincent Road, Suite 222
Pleasant Hill, CA 94523
Attention: Keel Robinson

Project ID: Montrose-Torrance Bench Study
P1190
Report Number: ISH0701

Sampled: 08/07/09
Received: 08/08/09

VOLATILE ORGANICS by GC/MS (EPA 5030B/8260B)

Analyte	Method	Batch	MDL Limit	Reporting Limit	Sample Result	Dilution Factor	Date Extracted	Date Analyzed	Data Qualifiers
Sample ID: ISH0701-13RE1 (P1190-SP-12-550 - Water) - cont.					**Sampled: 08/07/09**				
Reporting Units: ug/l									
cis-1,3-Dichloropropene	EPA 8260B	9H12034	0.44	4.0	ND	2	08/12/09	08/12/09	
trans-1,3-Dichloropropene	EPA 8260B	9H12034	0.64	4.0	ND	2	08/12/09	08/12/09	
1,1-Dichloropropene	EPA 8260B	9H12034	0.56	4.0	ND	2	08/12/09	08/12/09	
1,2-Dichloro-1,1,2-trifluoroethane	EPA 8260B	9H12034	2.2	4.0	ND	2	08/12/09	08/12/09	
Ethylbenzene	EPA 8260B	9H12034	0.50	4.0	ND	2	08/12/09	08/12/09	
Hexachlorobutadiene	EPA 8260B	9H12034	0.76	10	ND	2	08/12/09	08/12/09	
2-Hexanone	EPA 8260B	9H12034	5.2	20	ND	2	08/12/09	08/12/09	
Isopropylbenzene	EPA 8260B	9H12034	0.50	4.0	ND	2	08/12/09	08/12/09	
p-Isopropyltoluene	EPA 8260B	9H12034	0.56	4.0	ND	2	08/12/09	08/12/09	
4-Methyl-2-pentanone (MIBK)	EPA 8260B	9H12034	7.0	20	ND	2	08/12/09	08/12/09	
Methylene chloride	EPA 8260B	9H12034	1.9	10	ND	2	08/12/09	08/12/09	
Naphthalene	EPA 8260B	9H12034	0.82	10	ND	2	08/12/09	08/12/09	
n-Propylbenzene	EPA 8260B	9H12034	0.54	4.0	ND	2	08/12/09	08/12/09	
Styrene	EPA 8260B	9H12034	0.40	4.0	ND	2	08/12/09	08/12/09	
1,1,1,2-Tetrachloroethane	EPA 8260B	9H12034	0.54	10	ND	2	08/12/09	08/12/09	
1,1,2,2-Tetrachloroethane	EPA 8260B	9H12034	0.60	2.0	ND	2	08/12/09	08/12/09	
Tetrachloroethene	EPA 8260B	9H12034	0.64	4.0	ND	2	08/12/09	08/12/09	
Toluene	EPA 8260B	9H12034	0.72	4.0	ND	2	08/12/09	08/12/09	
1,2,3-Trichlorobenzene	EPA 8260B	9H12034	0.60	10	ND	2	08/12/09	08/12/09	
1,2,4-Trichlorobenzene	EPA 8260B	9H12034	0.96	10	ND	2	08/12/09	08/12/09	
1,1,1-Trichloroethane	EPA 8260B	9H12034	0.60	4.0	ND	2	08/12/09	08/12/09	
1,1,2-Trichloroethane	EPA 8260B	9H12034	0.60	4.0	ND	2	08/12/09	08/12/09	
Trichloroethene	EPA 8260B	9H12034	0.52	4.0	ND	2	08/12/09	08/12/09	
Trichlorofluoromethane	EPA 8260B	9H12034	0.68	10	ND	2	08/12/09	08/12/09	
1,2,3-Trichloropropane	EPA 8260B	9H12034	0.80	20	ND	2	08/12/09	08/12/09	
1,2,4-Trimethylbenzene	EPA 8260B	9H12034	0.46	4.0	ND	2	08/12/09	08/12/09	
1,3,5-Trimethylbenzene	EPA 8260B	9H12034	0.52	4.0	ND	2	08/12/09	08/12/09	
Vinyl acetate	EPA 8260B	9H12034	2.0	10	ND	2	08/12/09	08/12/09	
Vinyl chloride	EPA 8260B	9H12034	0.80	1.0	ND	2	08/12/09	08/12/09	
m,p-Xylenes	EPA 8260B	9H12034	1.2	4.0	ND	2	08/12/09	08/12/09	
o-Xylene	EPA 8260B	9H12034	0.60	4.0	ND	2	08/12/09	08/12/09	
Xylenes, Total	EPA 8260B	9H12034	1.8	4.0	ND	2	08/12/09	08/12/09	
Surrogate: 4-Bromofluorobenzene (80-120%)					*104 %*				
Surrogate: Dibromofluoromethane (80-120%)					*111 %*				
Surrogate: Toluene-d8 (80-120%)					*104 %*				

TestAmerica Irvine

Joseph Doak
Project Manager

The results pertain only to the samples tested in the laboratory. This report shall not be reproduced, except in full, without written permission from TestAmerica.

TestAmerica
THE LEADER IN ENVIRONMENTAL TESTING

17461 Derian Avenue. Suite 100, Irvine, CA 92614 (949) 261-1022 Fax:(949) 260-3297

Applied Process Technology
3333 Vincent Road, Suite 222
Pleasant Hill, CA 94523
Attention: Keel Robinson

Project ID: Montrose-Torrance Bench Study
P1190
Report Number: ISH0701

Sampled: 08/07/09
Received: 08/08/09

DISSOLVED METALS

Analyte	Method	Batch	MDL Limit	Reporting Limit	Sample Result	Dilution Factor	Date Extracted	Date Analyzed	Data Qualifiers
Sample ID: ISH0701-01 (P1190-SP-OA-500 - Water)					**Sampled: 08/07/09**				
Reporting Units: mg/l									
Calcium	EPA 6010B-Diss	9H10101	N/A	0.10	**110**	1	08/10/09	08/12/09	
Iron	EPA 6010B-Diss	9H10101	N/A	0.040	ND	1	08/10/09	08/12/09	
Magnesium	EPA 6010B-Diss	9H10101	N/A	0.020	**39**	1	08/10/09	08/12/09	
Manganese	EPA 6010B-Diss	9H10101	N/A	0.020	**0.15**	1	08/10/09	08/12/09	

TestAmerica Irvine

Joseph Doak
Project Manager

The results pertain only to the samples tested in the laboratory. This report shall not be reproduced, except in full, without written permission from TestAmerica.

TestAmerica
THE LEADER IN ENVIRONMENTAL TESTING

17461 Derian Avenue. Suite 100, Irvine, CA 92614 (949) 261-1022 Fax:(949) 260-3297

Applied Process Technology
3333 Vincent Road, Suite 222
Pleasant Hill, CA 94523
Attention: Keel Robinson

Project ID: Montrose-Torrance Bench Study
P1190
Report Number: ISH0701

Sampled: 08/07/09
Received: 08/08/09

INORGANICS

Analyte	Method	Batch	MDL Limit	Reporting Limit	Sample Result	Dilution Factor	Date Extracted	Date Analyzed	Data Qualifiers
Sample ID: ISH0701-01 (P1190-SP-OA-500 - Water)					**Sampled: 08/07/09**				
Reporting Units: mg/l									
Alkalinity as CaCO3	SM2320B	9H10057	N/A	2.0	**260**	1	08/10/09	08/10/09	
Bicarbonate	SM2320B	9H10057	N/A	2.4	**320**	1	08/10/09	08/10/09	
Carbonate	SM2320B	9H10057	N/A	1.2	ND	1	08/10/09	08/10/09	
Hydroxide	SM2320B	9H10057	N/A	0.70	ND	1	08/10/09	08/10/09	
Chemical Oxygen Demand	SM5220D	9H10077	N/A	20	**67**	1	08/10/09	08/10/09	
Hardness (as CaCO3)	SM2340C	9H11102	N/A	4.0	**420**	1	08/11/09	08/11/09	
Sulfate	EPA 300.0	9H10045	N/A	2.5	**160**	5	08/10/09	08/10/09	
Total Dissolved Solids	SM2540C	9H11007	N/A	10	**850**	1	08/11/09	08/11/09	
Total Organic Carbon	SM5310B	9H10001	N/A	1.0	**20**	1	08/10/09	08/10/09	
Sample ID: ISH0701-01 (P1190-SP-OA-500 - Water)					**Sampled: 08/07/09**				
Reporting Units: ug/l									
4-Chlorobenzenesulfonic acid	EPA 314.0 MOD.	9H18058	N/A	5000	**50000**	500	08/18/09	08/18/09	
Sample ID: ISH0701-02 (P1190-SP-1-500 - Water)					**Sampled: 08/07/09**				
Reporting Units: ug/l									
4-Chlorobenzenesulfonic acid	EPA 314.0 MOD.	9H18058	N/A	1000	**24000**	100	08/18/09	08/18/09	
Sample ID: ISH0701-03 (P1190-SP-2-500 - Water)					**Sampled: 08/07/09**				
Reporting Units: ug/l									
4-Chlorobenzenesulfonic acid	EPA 314.0 MOD.	9H18058	N/A	1000	**24000**	100	08/18/09	08/18/09	
Sample ID: ISH0701-04 (P1190-SP-3-500 - Water)					**Sampled: 08/07/09**				
Reporting Units: ug/l									
4-Chlorobenzenesulfonic acid	EPA 314.0 MOD.	9H18058	N/A	1000	**23000**	100	08/18/09	08/18/09	
Sample ID: ISH0701-05 (P1190-SP-4-500 - Water)					**Sampled: 08/07/09**				
Reporting Units: ug/l									
4-Chlorobenzenesulfonic acid	EPA 314.0 MOD.	9H18058	N/A	1000	**26000**	100	08/18/09	08/18/09	
Sample ID: ISH0701-06 (P1190-SP-5-500 - Water)					**Sampled: 08/07/09**				
Reporting Units: ug/l									
4-Chlorobenzenesulfonic acid	EPA 314.0 MOD.	9H18058	N/A	1000	**26000**	100	08/18/09	08/18/09	
Sample ID: ISH0701-07 (P1190-SP-6-500 - Water)					**Sampled: 08/07/09**				
Reporting Units: ug/l									
4-Chlorobenzenesulfonic acid	EPA 314.0 MOD.	9H18058	N/A	1000	**26000**	100	08/18/09	08/18/09	

TestAmerica Irvine

Joseph Doak
Project Manager

The results pertain only to the samples tested in the laboratory. This report shall not be reproduced, except in full, without written permission from TestAmerica.

TestAmerica
THE LEADER IN ENVIRONMENTAL TESTING
17461 Derian Avenue. Suite 100, Irvine, CA 92614 (949) 261-1022 Fax:(949) 260-3297

Applied Process Technology
3333 Vincent Road, Suite 222
Pleasant Hill, CA 94523
Attention: Keel Robinson

Project ID: Montrose-Torrance Bench Study
P1190
Report Number: ISH0701

Sampled: 08/07/09
Received: 08/08/09

INORGANICS

Analyte	Method	Batch	MDL Limit	Reporting Limit	Sample Result	Dilution Factor	Date Extracted	Date Analyzed	Data Qualifiers
Sample ID: ISH0701-08 (P1190-SP-7-500 - Water)					**Sampled: 08/07/09**				
Reporting Units: ug/l									
4-Chlorobenzenesulfonic acid	EPA 314.0 MOD.	9H18058	N/A	1000	**29000**	100	08/18/09	08/18/09	
Sample ID: ISH0701-09 (P1190-SP-8-550 - Water)					**Sampled: 08/07/09**				
Reporting Units: ug/l									
4-Chlorobenzenesulfonic acid	EPA 314.0 MOD.	9H18058	N/A	1000	**20000**	100	08/18/09	08/18/09	
Sample ID: ISH0701-10 (P1190-SP-9-550 - Water)					**Sampled: 08/07/09**				
Reporting Units: ug/l									
4-Chlorobenzenesulfonic acid	EPA 314.0 MOD.	9H18058	N/A	1000	**24000**	100	08/18/09	08/18/09	
Sample ID: ISH0701-11 (P1190-SP-10-550 - Water)					**Sampled: 08/07/09**				
Reporting Units: ug/l									
4-Chlorobenzenesulfonic acid	EPA 314.0 MOD.	9H18058	N/A	1000	**23000**	100	08/18/09	08/18/09	
Sample ID: ISH0701-12 (P1190-SP-11-550 - Water)					**Sampled: 08/07/09**				
Reporting Units: ug/l									
4-Chlorobenzenesulfonic acid	EPA 314.0 MOD.	9H18058	N/A	1000	**26000**	100	08/18/09	08/18/09	
Sample ID: ISH0701-13 (P1190-SP-12-550 - Water)					**Sampled: 08/07/09**				
Reporting Units: ug/l									
4-Chlorobenzenesulfonic acid	EPA 314.0 MOD.	9H18058	N/A	1000	**26000**	100	08/18/09	08/18/09	

TestAmerica Irvine

Joseph Doak
Project Manager

The results pertain only to the samples tested in the laboratory. This report shall not be reproduced, except in full, without written permission from TestAmerica.

TestAmerica
THE LEADER IN ENVIRONMENTAL TESTING

17461 Derian Avenue. Suite 100, Irvine, CA 92614 (949) 261-1022 Fax:(949) 260-3297

Applied Process Technology
3333 Vincent Road, Suite 222
Pleasant Hill, CA 94523
Attention: Keel Robinson

Project ID: Montrose-Torrance Bench Study
P1190
Report Number: ISH0701

Sampled: 08/07/09
Received: 08/08/09

METHOD BLANK/QC DATA

VOLATILE ORGANICS by GC/MS (EPA 5030B/8260B)

Analyte	Result	Reporting Limit	MDL	Units	Spike Level	Source Result	%REC	%REC Limits	RPD	RPD Limit	Data Qualifiers
Batch: 9H12029 Extracted: 08/12/09											
Blank Analyzed: 08/12/2009 (9H12029-BLK1)											
Acetone	ND	10	4.5	ug/l							
Benzene	ND	2.0	0.28	ug/l							
Bromobenzene	ND	5.0	0.27	ug/l							
Bromochloromethane	ND	5.0	0.40	ug/l							
Bromodichloromethane	ND	2.0	0.30	ug/l							
Bromoform	ND	5.0	0.40	ug/l							
Bromomethane	ND	5.0	0.42	ug/l							
2-Butanone (MEK)	ND	10	4.7	ug/l							
n-Butylbenzene	ND	5.0	0.37	ug/l							
sec-Butylbenzene	ND	5.0	0.25	ug/l							
tert-Butylbenzene	ND	5.0	0.22	ug/l							
Carbon Disulfide	ND	1.0	0.48	ug/l							
Carbon tetrachloride	ND	0.50	0.28	ug/l							
Chlorobenzene	ND	2.0	0.36	ug/l							
Chloroethane	ND	5.0	0.40	ug/l							
Chloroform	ND	2.0	0.33	ug/l							
Chloromethane	ND	1.5	0.40	ug/l							
2-Chlorotoluene	ND	5.0	0.28	ug/l							
4-Chlorotoluene	ND	5.0	0.29	ug/l							
1,2-Dibromo-3-chloropropane	ND	5.0	0.97	ug/l							
Dibromochloromethane	ND	2.0	0.40	ug/l							
1,2-Dibromoethane (EDB)	ND	2.0	0.40	ug/l							
Dibromomethane	ND	2.0	0.36	ug/l							
1,2-Dichlorobenzene	ND	2.0	0.32	ug/l							
1,3-Dichlorobenzene	ND	2.0	0.35	ug/l							
1,4-Dichlorobenzene	ND	2.0	0.37	ug/l							
Dichlorodifluoromethane	ND	5.0	0.26	ug/l							
1,1-Dichloroethane	ND	2.0	0.40	ug/l							
1,2-Dichloroethane	ND	0.50	0.28	ug/l							
1,1-Dichloroethene	ND	5.0	0.42	ug/l							
cis-1,2-Dichloroethene	ND	2.0	0.32	ug/l							
trans-1,2-Dichloroethene	ND	2.0	0.30	ug/l							
1,2-Dichloropropane	ND	2.0	0.35	ug/l							
1,3-Dichloropropane	ND	2.0	0.32	ug/l							
2,2-Dichloropropane	ND	2.0	0.34	ug/l							

TestAmerica Irvine

Joseph Doak
Project Manager

The results pertain only to the samples tested in the laboratory. This report shall not be reproduced, except in full, without written permission from TestAmerica.

TestAmerica
THE LEADER IN ENVIRONMENTAL TESTING

17461 Derian Avenue. Suite 100, Irvine, CA 92614 (949) 261-1022 Fax:(949) 260-3297

Applied Process Technology
3333 Vincent Road, Suite 222
Pleasant Hill, CA 94523
Attention: Keel Robinson

Project ID: Montrose-Torrance Bench Study
P1190
Report Number: ISH0701

Sampled: 08/07/09
Received: 08/08/09

METHOD BLANK/QC DATA

VOLATILE ORGANICS by GC/MS (EPA 5030B/8260B)

Analyte	Result	Reporting Limit	MDL	Units	Spike Level	Source Result	%REC	%REC Limits	RPD	RPD Limit	Data Qualifiers
Batch: 9H12029 Extracted: 08/12/09											
Blank Analyzed: 08/12/2009 (9H12029-BLK1)											
cis-1,3-Dichloropropene	ND	2.0	0.22	ug/l							
trans-1,3-Dichloropropene	ND	2.0	0.32	ug/l							
1,1-Dichloropropene	ND	2.0	0.28	ug/l							
1,2-Dichloro-1,1,2-trifluoroethane	ND	2.0	1.1	ug/l							
Ethylbenzene	ND	2.0	0.25	ug/l							
Hexachlorobutadiene	ND	5.0	0.38	ug/l							
2-Hexanone	ND	10	2.6	ug/l							
Isopropylbenzene	ND	2.0	0.25	ug/l							
p-Isopropyltoluene	ND	2.0	0.28	ug/l							
4-Methyl-2-pentanone (MIBK)	ND	10	3.5	ug/l							
Methylene chloride	ND	5.0	0.95	ug/l							
Naphthalene	ND	5.0	0.41	ug/l							
n-Propylbenzene	ND	2.0	0.27	ug/l							
Styrene	ND	2.0	0.20	ug/l							
1,1,1,2-Tetrachloroethane	ND	5.0	0.27	ug/l							
1,1,2,2-Tetrachloroethane	ND	1.0	0.30	ug/l							
Tetrachloroethene	ND	2.0	0.32	ug/l							
Toluene	ND	2.0	0.36	ug/l							
1,2,3-Trichlorobenzene	ND	5.0	0.30	ug/l							
1,2,4-Trichlorobenzene	ND	5.0	0.48	ug/l							
1,1,1-Trichloroethane	ND	2.0	0.30	ug/l							
1,1,2-Trichloroethane	ND	2.0	0.30	ug/l							
Trichloroethene	ND	2.0	0.26	ug/l							
Trichlorofluoromethane	ND	5.0	0.34	ug/l							
1,2,3-Trichloropropane	ND	10	0.40	ug/l							
1,2,4-Trimethylbenzene	ND	2.0	0.23	ug/l							
1,3,5-Trimethylbenzene	ND	2.0	0.26	ug/l							
Vinyl acetate	ND	5.0	1.0	ug/l							
Vinyl chloride	ND	0.50	0.40	ug/l							
m,p-Xylenes	ND	2.0	0.60	ug/l							
o-Xylene	ND	2.0	0.30	ug/l							
Xylenes, Total	ND	2.0	0.90	ug/l							
Surrogate: 4-Bromofluorobenzene	*25.5*			*ug/l*	*25.0*		*102*	*80-120*			
Surrogate: Dibromofluoromethane	*26.2*			*ug/l*	*25.0*		*105*	*80-120*			
Surrogate: Toluene-d8	*25.7*			*ug/l*	*25.0*		*103*	*80-120*			

TestAmerica Irvine

Joseph Doak
Project Manager

The results pertain only to the samples tested in the laboratory. This report shall not be reproduced, except in full, without written permission from TestAmerica.

TestAmerica
THE LEADER IN ENVIRONMENTAL TESTING

17461 Derian Avenue. Suite 100, Irvine, CA 92614 (949) 261-1022 Fax:(949) 260-3297

Applied Process Technology
3333 Vincent Road, Suite 222
Pleasant Hill, CA 94523
Attention: Keel Robinson

Project ID: Montrose-Torrance Bench Study
P1190
Report Number: ISH0701

Sampled: 08/07/09
Received: 08/08/09

METHOD BLANK/QC DATA

VOLATILE ORGANICS by GC/MS (EPA 5030B/8260B)

Analyte	Result	Reporting Limit	MDL	Units	Spike Level	Source Result	%REC	%REC Limits	RPD	RPD Limit	Data Qualifiers
Batch: 9H12029 Extracted: 08/12/09											
LCS Analyzed: 08/12/2009 (9H12029-BS1)											
Acetone	28.3	10	4.5	ug/l	25.0		113	30-140			
Benzene	25.4	2.0	0.28	ug/l	25.0		102	70-120			
Bromobenzene	24.5	5.0	0.27	ug/l	25.0		98	75-120			
Bromochloromethane	25.8	5.0	0.40	ug/l	25.0		103	70-130			
Bromodichloromethane	27.5	2.0	0.30	ug/l	25.0		110	70-135			
Bromoform	21.8	5.0	0.40	ug/l	25.0		87	55-130			
Bromomethane	29.5	5.0	0.42	ug/l	25.0		118	65-140			
2-Butanone (MEK)	28.4	10	4.7	ug/l	25.0		114	40-140			
n-Butylbenzene	26.5	5.0	0.37	ug/l	25.0		106	70-130			
sec-Butylbenzene	26.3	5.0	0.25	ug/l	25.0		105	70-125			
tert-Butylbenzene	26.3	5.0	0.22	ug/l	25.0		105	70-125			
Carbon Disulfide	28.2	1.0	0.48	ug/l	25.0		113	50-130			
Carbon tetrachloride	28.5	0.50	0.28	ug/l	25.0		114	65-140			
Chlorobenzene	25.3	2.0	0.36	ug/l	25.0		101	75-120			
Chloroethane	27.9	5.0	0.40	ug/l	25.0		112	60-140			
Chloroform	27.6	2.0	0.33	ug/l	25.0		110	70-130			
Chloromethane	28.1	1.5	0.40	ug/l	25.0		113	50-140			
2-Chlorotoluene	26.8	5.0	0.28	ug/l	25.0		107	70-125			
4-Chlorotoluene	26.6	5.0	0.29	ug/l	25.0		106	75-125			
1,2-Dibromo-3-chloropropane	29.3	5.0	0.97	ug/l	25.0		117	50-135			
Dibromochloromethane	27.7	2.0	0.40	ug/l	25.0		111	70-140			
1,2-Dibromoethane (EDB)	25.8	2.0	0.40	ug/l	25.0		103	75-125			
Dibromomethane	27.1	2.0	0.36	ug/l	25.0		108	70-125			
1,2-Dichlorobenzene	24.8	2.0	0.32	ug/l	25.0		99	75-120			
1,3-Dichlorobenzene	25.3	2.0	0.35	ug/l	25.0		101	75-120			
1,4-Dichlorobenzene	25.1	2.0	0.37	ug/l	25.0		101	75-120			
Dichlorodifluoromethane	28.1	5.0	0.26	ug/l	25.0		112	35-155			
1,1-Dichloroethane	26.2	2.0	0.40	ug/l	25.0		105	70-125			
1,2-Dichloroethane	27.0	0.50	0.28	ug/l	25.0		108	60-140			
1,1-Dichloroethene	30.8	5.0	0.42	ug/l	25.0		123	70-125			
cis-1,2-Dichloroethene	26.8	2.0	0.32	ug/l	25.0		107	70-125			
trans-1,2-Dichloroethene	27.6	2.0	0.30	ug/l	25.0		110	70-125			
1,2-Dichloropropane	25.6	2.0	0.35	ug/l	25.0		102	70-125			
1,3-Dichloropropane	26.4	2.0	0.32	ug/l	25.0		106	70-120			
2,2-Dichloropropane	31.3	2.0	0.34	ug/l	25.0		125	65-140			

TestAmerica Irvine

Joseph Doak
Project Manager

The results pertain only to the samples tested in the laboratory. This report shall not be reproduced, except in full, without written permission from TestAmerica.

TestAmerica
THE LEADER IN ENVIRONMENTAL TESTING

17461 Derian Avenue. Suite 100, Irvine, CA 92614 (949) 261-1022 Fax:(949) 260-3297

Applied Process Technology
3333 Vincent Road, Suite 222
Pleasant Hill, CA 94523
Attention: Keel Robinson

Project ID: Montrose-Torrance Bench Study
P1190
Report Number: ISH0701

Sampled: 08/07/09
Received: 08/08/09

METHOD BLANK/QC DATA

VOLATILE ORGANICS by GC/MS (EPA 5030B/8260B)

Analyte	Result	Reporting Limit	MDL	Units	Spike Level	Source Result	%REC	%REC Limits	RPD	RPD Limit	Data Qualifiers
Batch: 9H12029 Extracted: 08/12/09											
LCS Analyzed: 08/12/2009 (9H12029-BS1)											
cis-1,3-Dichloropropene	25.1	2.0	0.22	ug/l	25.0		101	75-125			
trans-1,3-Dichloropropene	25.2	2.0	0.32	ug/l	25.0		101	70-125			
1,1-Dichloropropene	27.4	2.0	0.28	ug/l	25.0		109	75-130			
Ethylbenzene	27.1	2.0	0.25	ug/l	25.0		108	75-125			
Hexachlorobutadiene	24.1	5.0	0.38	ug/l	25.0		96	65-135			
2-Hexanone	30.6	10	2.6	ug/l	25.0		122	45-140			
Isopropylbenzene	27.0	2.0	0.25	ug/l	25.0		108	75-130			
p-Isopropyltoluene	25.5	2.0	0.28	ug/l	25.0		102	75-125			
4-Methyl-2-pentanone (MIBK)	29.9	10	3.5	ug/l	25.0		119	45-140			
Methylene chloride	27.6	5.0	0.95	ug/l	25.0		110	55-130			
Naphthalene	26.3	5.0	0.41	ug/l	25.0		105	55-135			
n-Propylbenzene	26.8	2.0	0.27	ug/l	25.0		107	75-130			
Styrene	25.3	2.0	0.20	ug/l	25.0		101	75-130			
1,1,1,2-Tetrachloroethane	25.2	5.0	0.27	ug/l	25.0		101	70-130			
1,1,2,2-Tetrachloroethane	27.5	1.0	0.30	ug/l	25.0		110	55-130			
Tetrachloroethene	25.7	2.0	0.32	ug/l	25.0		103	70-125			
Toluene	25.7	2.0	0.36	ug/l	25.0		103	70-120			
1,2,3-Trichlorobenzene	24.6	5.0	0.30	ug/l	25.0		98	65-125			
1,2,4-Trichlorobenzene	24.8	5.0	0.48	ug/l	25.0		99	70-135			
1,1,1-Trichloroethane	28.9	2.0	0.30	ug/l	25.0		116	65-135			
1,1,2-Trichloroethane	26.9	2.0	0.30	ug/l	25.0		107	70-125			
Trichloroethene	25.7	2.0	0.26	ug/l	25.0		103	70-125			
Trichlorofluoromethane	29.4	5.0	0.34	ug/l	25.0		118	65-145			
1,2,3-Trichloropropane	26.7	10	0.40	ug/l	25.0		107	60-130			
1,2,4-Trimethylbenzene	26.0	2.0	0.23	ug/l	25.0		104	75-125			
1,3,5-Trimethylbenzene	26.3	2.0	0.26	ug/l	25.0		105	75-125			
Vinyl acetate	33.2	5.0	1.0	ug/l	25.0		133	45-145			
Vinyl chloride	30.4	0.50	0.40	ug/l	25.0		122	55-135			
m,p-Xylenes	51.3	2.0	0.60	ug/l	50.0		103	75-125			
o-Xylene	25.7	2.0	0.30	ug/l	25.0		103	75-125			
Surrogate: 4-Bromofluorobenzene	*26.8*			*ug/l*	*25.0*		*107*	*80-120*			
Surrogate: Dibromofluoromethane	*26.4*			*ug/l*	*25.0*		*106*	*80-120*			
Surrogate: Toluene-d8	*25.8*			*ug/l*	*25.0*		*103*	*80-120*			

TestAmerica Irvine

Joseph Doak
Project Manager

The results pertain only to the samples tested in the laboratory. This report shall not be reproduced, except in full, without written permission from TestAmerica.

TestAmerica
THE LEADER IN ENVIRONMENTAL TESTING

17461 Derian Avenue. Suite 100, Irvine, CA 92614 (949) 261-1022 Fax:(949) 260-3297

Applied Process Technology
3333 Vincent Road, Suite 222
Pleasant Hill, CA 94523
Attention: Keel Robinson

Project ID: Montrose-Torrance Bench Study
P1190
Report Number: ISH0701

Sampled: 08/07/09
Received: 08/08/09

METHOD BLANK/QC DATA

VOLATILE ORGANICS by GC/MS (EPA 5030B/8260B)

Analyte	Result	Reporting Limit	MDL	Units	Spike Level	Source Result	%REC	%REC Limits	RPD	RPD Limit	Data Qualifiers
Batch: 9H12029 Extracted: 08/12/09											
Matrix Spike Analyzed: 08/12/2009 (9H12029-MS1)						**Source: ISH0701-06**					
Acetone	271	100	45	ug/l	250	ND	108	20-150			
Benzene	262	20	2.8	ug/l	250	ND	105	65-125			
Bromobenzene	251	50	2.7	ug/l	250	ND	101	70-125			
Bromochloromethane	279	50	4.0	ug/l	250	ND	111	65-135			
Bromodichloromethane	295	20	3.0	ug/l	250	ND	118	70-135			
Bromoform	214	50	4.0	ug/l	250	ND	86	55-135			
Bromomethane	280	50	4.2	ug/l	250	ND	112	55-145			
2-Butanone (MEK)	271	100	47	ug/l	250	ND	108	30-145			
n-Butylbenzene	271	50	3.7	ug/l	250	ND	108	65-135			
sec-Butylbenzene	268	50	2.5	ug/l	250	ND	107	70-125			
tert-Butylbenzene	266	50	2.2	ug/l	250	ND	106	65-130			
Carbon Disulfide	278	10	4.8	ug/l	250	ND	111	40-140			
Carbon tetrachloride	286	5.0	2.8	ug/l	250	ND	114	65-140			
Chlorobenzene	849	20	3.6	ug/l	250	651	79	75-125			
Chloroethane	267	50	4.0	ug/l	250	ND	107	55-140			
Chloroform	289	20	3.3	ug/l	250	ND	115	65-135			
Chloromethane	260	15	4.0	ug/l	250	ND	104	45-145			
2-Chlorotoluene	274	50	2.8	ug/l	250	ND	110	65-135			
4-Chlorotoluene	274	50	2.9	ug/l	250	ND	110	70-135			
1,2-Dibromo-3-chloropropane	278	50	9.7	ug/l	250	ND	111	45-145			
Dibromochloromethane	287	20	4.0	ug/l	250	ND	115	65-140			
1,2-Dibromoethane (EDB)	263	20	4.0	ug/l	250	ND	105	70-130			
Dibromomethane	285	20	3.6	ug/l	250	ND	114	65-135			
1,2-Dichlorobenzene	258	20	3.2	ug/l	250	ND	103	75-125			
1,3-Dichlorobenzene	261	20	3.5	ug/l	250	ND	104	75-125			
1,4-Dichlorobenzene	261	20	3.7	ug/l	250	ND	105	75-125			
Dichlorodifluoromethane	238	50	2.6	ug/l	250	ND	95	25-155			
1,1-Dichloroethane	270	20	4.0	ug/l	250	ND	108	65-130			
1,2-Dichloroethane	291	5.0	2.8	ug/l	250	ND	116	60-140			
1,1-Dichloroethene	314	50	4.2	ug/l	250	ND	126	60-130			
cis-1,2-Dichloroethene	275	20	3.2	ug/l	250	ND	110	65-130			
trans-1,2-Dichloroethene	279	20	3.0	ug/l	250	ND	112	65-130			
1,2-Dichloropropane	269	20	3.5	ug/l	250	ND	108	65-130			
1,3-Dichloropropane	270	20	3.2	ug/l	250	ND	108	65-135			
2,2-Dichloropropane	291	20	3.4	ug/l	250	ND	117	60-145			

TestAmerica Irvine

Joseph Doak
Project Manager

The results pertain only to the samples tested in the laboratory. This report shall not be reproduced, except in full, without written permission from TestAmerica.

TestAmerica
THE LEADER IN ENVIRONMENTAL TESTING

17461 Derian Avenue. Suite 100, Irvine, CA 92614 (949) 261-1022 Fax:(949) 260-3297

Applied Process Technology
3333 Vincent Road, Suite 222
Pleasant Hill, CA 94523
Attention: Keel Robinson

Project ID: Montrose-Torrance Bench Study
P1190
Report Number: ISH0701

Sampled: 08/07/09
Received: 08/08/09

METHOD BLANK/QC DATA

VOLATILE ORGANICS by GC/MS (EPA 5030B/8260B)

Analyte	Result	Reporting Limit	MDL	Units	Spike Level	Source Result	%REC	%REC Limits	RPD	RPD Limit	Data Qualifiers
Batch: 9H12029 Extracted: 08/12/09											
Matrix Spike Analyzed: 08/12/2009 (9H12029-MS1)					**Source: ISH0701-06**						
cis-1,3-Dichloropropene	268	20	2.2	ug/l	250	ND	107	70-130			
trans-1,3-Dichloropropene	264	20	3.2	ug/l	250	ND	105	65-135			
1,1-Dichloropropene	277	20	2.8	ug/l	250	ND	111	70-135			
Ethylbenzene	273	20	2.5	ug/l	250	ND	109	65-130			
Hexachlorobutadiene	248	50	3.8	ug/l	250	ND	99	60-135			
2-Hexanone	286	100	26	ug/l	250	ND	115	25-140			
Isopropylbenzene	270	20	2.5	ug/l	250	ND	108	70-135			
p-Isopropyltoluene	256	20	2.8	ug/l	250	ND	103	65-130			
4-Methyl-2-pentanone (MIBK)	296	100	35	ug/l	250	ND	118	40-140			
Methylene chloride	297	50	9.5	ug/l	250	ND	119	50-135			
Naphthalene	272	50	4.1	ug/l	250	ND	109	50-140			
n-Propylbenzene	270	20	2.7	ug/l	250	ND	108	70-135			
Styrene	258	20	2.0	ug/l	250	ND	103	50-145			
1,1,1,2-Tetrachloroethane	262	50	2.7	ug/l	250	ND	105	65-140			
1,1,2,2-Tetrachloroethane	279	10	3.0	ug/l	250	ND	112	55-135			
Tetrachloroethene	254	20	3.2	ug/l	250	ND	101	65-130			
Toluene	263	20	3.6	ug/l	250	ND	105	70-125			
1,2,3-Trichlorobenzene	262	50	3.0	ug/l	250	ND	105	60-135			
1,2,4-Trichlorobenzene	262	50	4.8	ug/l	250	ND	105	65-135			
1,1,1-Trichloroethane	288	20	3.0	ug/l	250	ND	115	65-140			
1,1,2-Trichloroethane	278	20	3.0	ug/l	250	ND	111	65-130			
Trichloroethene	260	20	2.6	ug/l	250	ND	104	65-125			
Trichlorofluoromethane	284	50	3.4	ug/l	250	ND	113	60-145			
1,2,3-Trichloropropane	270	100	4.0	ug/l	250	ND	108	55-135			
1,2,4-Trimethylbenzene	267	20	2.3	ug/l	250	ND	107	55-135			
1,3,5-Trimethylbenzene	268	20	2.6	ug/l	250	ND	107	70-130			
Vinyl acetate	326	50	10	ug/l	250	ND	130	40-150			
Vinyl chloride	287	5.0	4.0	ug/l	250	ND	115	45-140			
m,p-Xylenes	517	20	6.0	ug/l	500	ND	103	65-130			
o-Xylene	264	20	3.0	ug/l	250	ND	106	65-125			
Surrogate: 4-Bromofluorobenzene	*275*			*ug/l*	*250*		*110*	*80-120*			
Surrogate: Dibromofluoromethane	*272*			*ug/l*	*250*		*109*	*80-120*			
Surrogate: Toluene-d8	*260*			*ug/l*	*250*		*104*	*80-120*			

TestAmerica Irvine

Joseph Doak
Project Manager

The results pertain only to the samples tested in the laboratory. This report shall not be reproduced, except in full, without written permission from TestAmerica.

TestAmerica
THE LEADER IN ENVIRONMENTAL TESTING

17461 Derian Avenue. Suite 100, Irvine, CA 92614 (949) 261-1022 Fax:(949) 260-3297

Applied Process Technology
3333 Vincent Road, Suite 222
Pleasant Hill, CA 94523
Attention: Keel Robinson

Project ID: Montrose-Torrance Bench Study
P1190
Report Number: ISH0701

Sampled: 08/07/09
Received: 08/08/09

METHOD BLANK/QC DATA

VOLATILE ORGANICS by GC/MS (EPA 5030B/8260B)

Analyte	Result	Reporting Limit	MDL	Units	Spike Level	Source Result	%REC	%REC Limits	RPD	RPD Limit	Data Qualifiers
Batch: 9H12029 Extracted: 08/12/09											
Matrix Spike Dup Analyzed: 08/12/2009 (9H12029-MSD1)						**Source: ISH0701-06**					
Acetone	265	100	45	ug/l	250	ND	106	20-150	2	35	
Benzene	252	20	2.8	ug/l	250	ND	101	65-125	4	20	
Bromobenzene	240	50	2.7	ug/l	250	ND	96	70-125	5	20	
Bromochloromethane	260	50	4.0	ug/l	250	ND	104	65-135	7	25	
Bromodichloromethane	277	20	3.0	ug/l	250	ND	111	70-135	6	20	
Bromoform	210	50	4.0	ug/l	250	ND	84	55-135	2	25	
Bromomethane	284	50	4.2	ug/l	250	ND	114	55-145	1	25	
2-Butanone (MEK)	260	100	47	ug/l	250	ND	104	30-145	4	40	
n-Butylbenzene	262	50	3.7	ug/l	250	ND	105	65-135	3	20	
sec-Butylbenzene	259	50	2.5	ug/l	250	ND	103	70-125	3	20	
tert-Butylbenzene	257	50	2.2	ug/l	250	ND	103	65-130	4	20	
Carbon Disulfide	270	10	4.8	ug/l	250	ND	108	40-140	3	20	
Carbon tetrachloride	285	5.0	2.8	ug/l	250	ND	114	65-140	1	25	
Chlorobenzene	883	20	3.6	ug/l	250	651	93	75-125	4	20	
Chloroethane	264	50	4.0	ug/l	250	ND	106	55-140	1	25	
Chloroform	279	20	3.3	ug/l	250	ND	112	65-135	3	20	
Chloromethane	257	15	4.0	ug/l	250	ND	103	45-145	1	25	
2-Chlorotoluene	267	50	2.8	ug/l	250	ND	107	65-135	3	20	
4-Chlorotoluene	263	50	2.9	ug/l	250	ND	105	70-135	4	20	
1,2-Dibromo-3-chloropropane	268	50	9.7	ug/l	250	ND	107	45-145	4	30	
Dibromochloromethane	276	20	4.0	ug/l	250	ND	110	65-140	4	25	
1,2-Dibromoethane (EDB)	252	20	4.0	ug/l	250	ND	101	70-130	4	25	
Dibromomethane	276	20	3.6	ug/l	250	ND	110	65-135	3	25	
1,2-Dichlorobenzene	246	20	3.2	ug/l	250	ND	98	75-125	5	20	
1,3-Dichlorobenzene	251	20	3.5	ug/l	250	ND	101	75-125	4	20	
1,4-Dichlorobenzene	249	20	3.7	ug/l	250	ND	100	75-125	5	20	
Dichlorodifluoromethane	233	50	2.6	ug/l	250	ND	93	25-155	2	30	
1,1-Dichloroethane	262	20	4.0	ug/l	250	ND	105	65-130	3	20	
1,2-Dichloroethane	277	5.0	2.8	ug/l	250	ND	111	60-140	5	20	
1,1-Dichloroethene	304	50	4.2	ug/l	250	ND	121	60-130	3	20	
cis-1,2-Dichloroethene	269	20	3.2	ug/l	250	ND	108	65-130	2	20	
trans-1,2-Dichloroethene	274	20	3.0	ug/l	250	ND	110	65-130	2	20	
1,2-Dichloropropane	257	20	3.5	ug/l	250	ND	103	65-130	5	20	
1,3-Dichloropropane	261	20	3.2	ug/l	250	ND	104	65-135	4	25	
2,2-Dichloropropane	281	20	3.4	ug/l	250	ND	113	60-145	4	25	

TestAmerica Irvine

Joseph Doak
Project Manager

The results pertain only to the samples tested in the laboratory. This report shall not be reproduced, except in full, without written permission from TestAmerica.

TestAmerica
THE LEADER IN ENVIRONMENTAL TESTING

17461 Derian Avenue. Suite 100, Irvine, CA 92614 (949) 261-1022 Fax:(949) 260-3297

Applied Process Technology
3333 Vincent Road, Suite 222
Pleasant Hill, CA 94523
Attention: Keel Robinson

Project ID: Montrose-Torrance Bench Study
P1190
Report Number: ISH0701

Sampled: 08/07/09
Received: 08/08/09

METHOD BLANK/QC DATA

VOLATILE ORGANICS by GC/MS (EPA 5030B/8260B)

Analyte	Result	Reporting Limit	MDL	Units	Spike Level	Source Result	%REC	%REC Limits	RPD	RPD Limit	Data Qualifiers
Batch: 9H12029 Extracted: 08/12/09											
Matrix Spike Dup Analyzed: 08/12/2009 (9H12029-MSD1)						**Source: ISH0701-06**					
cis-1,3-Dichloropropene	254	20	2.2	ug/l	250	ND	102	70-130	6	20	
trans-1,3-Dichloropropene	256	20	3.2	ug/l	250	ND	102	65-135	3	25	
1,1-Dichloropropene	266	20	2.8	ug/l	250	ND	107	70-135	4	20	
Ethylbenzene	266	20	2.5	ug/l	250	ND	106	65-130	3	20	
Hexachlorobutadiene	237	50	3.8	ug/l	250	ND	95	60-135	5	20	
2-Hexanone	279	100	26	ug/l	250	ND	111	25-140	3	35	
Isopropylbenzene	260	20	2.5	ug/l	250	ND	104	70-135	4	20	
p-Isopropyltoluene	248	20	2.8	ug/l	250	ND	99	65-130	3	20	
4-Methyl-2-pentanone (MIBK)	277	100	35	ug/l	250	ND	111	40-140	6	35	
Methylene chloride	288	50	9.5	ug/l	250	ND	115	50-135	3	20	
Naphthalene	253	50	4.1	ug/l	250	ND	101	50-140	7	30	
n-Propylbenzene	263	20	2.7	ug/l	250	ND	105	70-135	3	20	
Styrene	253	20	2.0	ug/l	250	ND	101	50-145	2	30	
1,1,1,2-Tetrachloroethane	254	50	2.7	ug/l	250	ND	102	65-140	3	20	
1,1,2,2-Tetrachloroethane	264	10	3.0	ug/l	250	ND	106	55-135	5	30	
Tetrachloroethene	252	20	3.2	ug/l	250	ND	101	65-130	1	20	
Toluene	256	20	3.6	ug/l	250	ND	102	70-125	3	20	
1,2,3-Trichlorobenzene	247	50	3.0	ug/l	250	ND	99	60-135	6	20	
1,2,4-Trichlorobenzene	248	50	4.8	ug/l	250	ND	99	65-135	5	20	
1,1,1-Trichloroethane	284	20	3.0	ug/l	250	ND	114	65-140	1	20	
1,1,2-Trichloroethane	266	20	3.0	ug/l	250	ND	106	65-130	5	25	
Trichloroethene	250	20	2.6	ug/l	250	ND	100	65-125	4	20	
Trichlorofluoromethane	281	50	3.4	ug/l	250	ND	112	60-145	1	25	
1,2,3-Trichloropropane	248	100	4.0	ug/l	250	ND	99	55-135	8	30	
1,2,4-Trimethylbenzene	257	20	2.3	ug/l	250	ND	103	55-135	4	25	
1,3,5-Trimethylbenzene	258	20	2.6	ug/l	250	ND	103	70-130	4	20	
Vinyl acetate	315	50	10	ug/l	250	ND	126	40-150	4	30	
Vinyl chloride	286	5.0	4.0	ug/l	250	ND	114	45-140	0	30	
m,p-Xylenes	512	20	6.0	ug/l	500	ND	102	65-130	1	25	
o-Xylene	252	20	3.0	ug/l	250	ND	101	65-125	5	20	
Surrogate: 4-Bromofluorobenzene	*270*			*ug/l*	*250*		*108*	*80-120*			
Surrogate: Dibromofluoromethane	*273*			*ug/l*	*250*		*109*	*80-120*			
Surrogate: Toluene-d8	*258*			*ug/l*	*250*		*103*	*80-120*			

TestAmerica Irvine

Joseph Doak
Project Manager

The results pertain only to the samples tested in the laboratory. This report shall not be reproduced, except in full, without written permission from TestAmerica.

TestAmerica
THE LEADER IN ENVIRONMENTAL TESTING

17461 Derian Avenue. Suite 100, Irvine, CA 92614 (949) 261-1022 Fax:(949) 260-3297

Applied Process Technology
3333 Vincent Road, Suite 222
Pleasant Hill, CA 94523
Attention: Keel Robinson

Project ID: Montrose-Torrance Bench Study
P1190
Report Number: ISH0701

Sampled: 08/07/09
Received: 08/08/09

METHOD BLANK/QC DATA

VOLATILE ORGANICS by GC/MS (EPA 5030B/8260B)

Analyte	Result	Reporting Limit	MDL	Units	Spike Level	Source Result	%REC	%REC Limits	RPD	RPD Limit	Data Qualifiers
Batch: 9H12030 Extracted: 08/12/09											
Blank Analyzed: 08/12/2009 (9H12030-BLK1)											
Acetone	ND	10	4.5	ug/l							
Benzene	ND	2.0	0.28	ug/l							
Bromobenzene	ND	5.0	0.27	ug/l							
Bromochloromethane	ND	5.0	0.40	ug/l							
Bromodichloromethane	ND	2.0	0.30	ug/l							
Bromoform	ND	5.0	0.40	ug/l							
Bromomethane	ND	5.0	0.42	ug/l							
2-Butanone (MEK)	ND	10	4.7	ug/l							
n-Butylbenzene	ND	5.0	0.37	ug/l							
sec-Butylbenzene	ND	5.0	0.25	ug/l							
tert-Butylbenzene	ND	5.0	0.22	ug/l							
Carbon Disulfide	ND	1.0	0.48	ug/l							
Carbon tetrachloride	ND	0.50	0.28	ug/l							
Chlorobenzene	ND	2.0	0.36	ug/l							
Chloroethane	ND	5.0	0.40	ug/l							
Chloroform	ND	2.0	0.33	ug/l							
Chloromethane	ND	1.5	0.40	ug/l							
2-Chlorotoluene	ND	5.0	0.28	ug/l							
4-Chlorotoluene	ND	5.0	0.29	ug/l							
1,2-Dibromo-3-chloropropane	ND	5.0	0.97	ug/l							
Dibromochloromethane	ND	2.0	0.40	ug/l							
1,2-Dibromoethane (EDB)	ND	2.0	0.40	ug/l							
Dibromomethane	ND	2.0	0.36	ug/l							
1,2-Dichlorobenzene	ND	2.0	0.32	ug/l							
1,3-Dichlorobenzene	ND	2.0	0.35	ug/l							
1,4-Dichlorobenzene	ND	2.0	0.37	ug/l							
Dichlorodifluoromethane	ND	5.0	0.26	ug/l							
1,1-Dichloroethane	ND	2.0	0.40	ug/l							
1,2-Dichloroethane	ND	0.50	0.28	ug/l							
1,1-Dichloroethene	ND	5.0	0.42	ug/l							
cis-1,2-Dichloroethene	ND	2.0	0.32	ug/l							
trans-1,2-Dichloroethene	ND	2.0	0.30	ug/l							
1,2-Dichloropropane	ND	2.0	0.35	ug/l							
1,3-Dichloropropane	ND	2.0	0.32	ug/l							
2,2-Dichloropropane	ND	2.0	0.34	ug/l							

TestAmerica Irvine

Joseph Doak
Project Manager

The results pertain only to the samples tested in the laboratory. This report shall not be reproduced, except in full, without written permission from TestAmerica.

TestAmerica
THE LEADER IN ENVIRONMENTAL TESTING

17461 Derian Avenue. Suite 100, Irvine, CA 92614 (949) 261-1022 Fax:(949) 260-3297

Applied Process Technology
3333 Vincent Road, Suite 222
Pleasant Hill, CA 94523
Attention: Keel Robinson

Project ID: Montrose-Torrance Bench Study
P1190
Report Number: ISH0701

Sampled: 08/07/09
Received: 08/08/09

METHOD BLANK/QC DATA

VOLATILE ORGANICS by GC/MS (EPA 5030B/8260B)

Analyte	Result	Reporting Limit	MDL	Units	Spike Level	Source Result	%REC	%REC Limits	RPD	RPD Limit	Data Qualifiers
Batch: 9H12030 Extracted: 08/12/09											
Blank Analyzed: 08/12/2009 (9H12030-BLK1)											
cis-1,3-Dichloropropene	ND	2.0	0.22	ug/l							
trans-1,3-Dichloropropene	ND	2.0	0.32	ug/l							
1,1-Dichloropropene	ND	2.0	0.28	ug/l							
1,2-Dichloro-1,1,2-trifluoroethane	ND	2.0	1.1	ug/l							
Ethylbenzene	ND	2.0	0.25	ug/l							
Hexachlorobutadiene	ND	5.0	0.38	ug/l							
2-Hexanone	ND	10	2.6	ug/l							
Isopropylbenzene	ND	2.0	0.25	ug/l							
p-Isopropyltoluene	ND	2.0	0.28	ug/l							
4-Methyl-2-pentanone (MIBK)	ND	10	3.5	ug/l							
Methylene chloride	ND	5.0	0.95	ug/l							
Naphthalene	ND	5.0	0.41	ug/l							
n-Propylbenzene	ND	2.0	0.27	ug/l							
Styrene	ND	2.0	0.20	ug/l							
1,1,1,2-Tetrachloroethane	ND	5.0	0.27	ug/l							
1,1,2,2-Tetrachloroethane	ND	1.0	0.30	ug/l							
Tetrachloroethene	ND	2.0	0.32	ug/l							
Toluene	ND	2.0	0.36	ug/l							
1,2,3-Trichlorobenzene	ND	5.0	0.30	ug/l							
1,2,4-Trichlorobenzene	ND	5.0	0.48	ug/l							
1,1,1-Trichloroethane	ND	2.0	0.30	ug/l							
1,1,2-Trichloroethane	ND	2.0	0.30	ug/l							
Trichloroethene	ND	2.0	0.26	ug/l							
Trichlorofluoromethane	ND	5.0	0.34	ug/l							
1,2,3-Trichloropropane	ND	10	0.40	ug/l							
1,2,4-Trimethylbenzene	ND	2.0	0.23	ug/l							
1,3,5-Trimethylbenzene	ND	2.0	0.26	ug/l							
Vinyl acetate	ND	5.0	1.0	ug/l							
Vinyl chloride	ND	0.50	0.40	ug/l							
m,p-Xylenes	ND	2.0	0.60	ug/l							
o-Xylene	ND	2.0	0.30	ug/l							
Xylenes, Total	ND	2.0	0.90	ug/l							
Surrogate: 4-Bromofluorobenzene	*25.0*			*ug/l*	*25.0*		*100*	*80-120*			
Surrogate: Dibromofluoromethane	*25.6*			*ug/l*	*25.0*		*102*	*80-120*			
Surrogate: Toluene-d8	*26.9*			*ug/l*	*25.0*		*108*	*80-120*			

TestAmerica Irvine

Joseph Doak
Project Manager

The results pertain only to the samples tested in the laboratory. This report shall not be reproduced, except in full, without written permission from TestAmerica.

TestAmerica
THE LEADER IN ENVIRONMENTAL TESTING

17461 Derian Avenue. Suite 100, Irvine, CA 92614 (949) 261-1022 Fax:(949) 260-3297

Applied Process Technology
3333 Vincent Road, Suite 222
Pleasant Hill, CA 94523
Attention: Keel Robinson

Project ID: Montrose-Torrance Bench Study
P1190
Report Number: ISH0701

Sampled: 08/07/09
Received: 08/08/09

METHOD BLANK/QC DATA

VOLATILE ORGANICS by GC/MS (EPA 5030B/8260B)

Analyte	Result	Reporting Limit	MDL	Units	Spike Level	Source Result	%REC	%REC Limits	RPD	RPD Limit	Data Qualifiers
Batch: 9H12030 Extracted: 08/12/09											
LCS Analyzed: 08/12/2009 (9H12030-BS1)											
Acetone	23.6	10	4.5	ug/l	25.0		95	30-140			
Benzene	25.7	2.0	0.28	ug/l	25.0		103	70-120			
Bromobenzene	26.6	5.0	0.27	ug/l	25.0		106	75-120			
Bromochloromethane	26.7	5.0	0.40	ug/l	25.0		107	70-130			
Bromodichloromethane	27.7	2.0	0.30	ug/l	25.0		111	70-135			
Bromoform	21.1	5.0	0.40	ug/l	25.0		84	55-130			
Bromomethane	26.1	5.0	0.42	ug/l	25.0		105	65-140			
2-Butanone (MEK)	28.7	10	4.7	ug/l	25.0		115	40-140			
n-Butylbenzene	27.0	5.0	0.37	ug/l	25.0		108	70-130			
sec-Butylbenzene	26.5	5.0	0.25	ug/l	25.0		106	70-125			
tert-Butylbenzene	26.5	5.0	0.22	ug/l	25.0		106	70-125			
Carbon Disulfide	26.5	1.0	0.48	ug/l	25.0		106	50-130			
Carbon tetrachloride	27.0	0.50	0.28	ug/l	25.0		108	65-140			
Chlorobenzene	26.1	2.0	0.36	ug/l	25.0		104	75-120			
Chloroethane	26.2	5.0	0.40	ug/l	25.0		105	60-140			
Chloroform	27.1	2.0	0.33	ug/l	25.0		108	70-130			
Chloromethane	23.4	1.5	0.40	ug/l	25.0		94	50-140			
2-Chlorotoluene	27.8	5.0	0.28	ug/l	25.0		111	70-125			
4-Chlorotoluene	27.7	5.0	0.29	ug/l	25.0		111	75-125			
1,2-Dibromo-3-chloropropane	27.8	5.0	0.97	ug/l	25.0		111	50-135			
Dibromochloromethane	28.2	2.0	0.40	ug/l	25.0		113	70-140			
1,2-Dibromoethane (EDB)	26.6	2.0	0.40	ug/l	25.0		106	75-125			
Dibromomethane	27.7	2.0	0.36	ug/l	25.0		111	70-125			
1,2-Dichlorobenzene	26.2	2.0	0.32	ug/l	25.0		105	75-120			
1,3-Dichlorobenzene	27.0	2.0	0.35	ug/l	25.0		108	75-120			
1,4-Dichlorobenzene	26.0	2.0	0.37	ug/l	25.0		104	75-120			
Dichlorodifluoromethane	26.5	5.0	0.26	ug/l	25.0		106	35-155			
1,1-Dichloroethane	26.5	2.0	0.40	ug/l	25.0		106	70-125			
1,2-Dichloroethane	24.9	0.50	0.28	ug/l	25.0		100	60-140			
1,1-Dichloroethene	29.6	5.0	0.42	ug/l	25.0		118	70-125			
cis-1,2-Dichloroethene	29.1	2.0	0.32	ug/l	25.0		117	70-125			
trans-1,2-Dichloroethene	29.2	2.0	0.30	ug/l	25.0		117	70-125			
1,2-Dichloropropane	24.3	2.0	0.35	ug/l	25.0		97	70-125			
1,3-Dichloropropane	29.1	2.0	0.32	ug/l	25.0		116	70-120			
2,2-Dichloropropane	28.1	2.0	0.34	ug/l	25.0		112	65-140			

TestAmerica Irvine

Joseph Doak
Project Manager

The results pertain only to the samples tested in the laboratory. This report shall not be reproduced, except in full, without written permission from TestAmerica.

TestAmerica
THE LEADER IN ENVIRONMENTAL TESTING

17461 Derian Avenue. Suite 100, Irvine, CA 92614 (949) 261-1022 Fax:(949) 260-3297

Applied Process Technology
3333 Vincent Road, Suite 222
Pleasant Hill, CA 94523
Attention: Keel Robinson

Project ID: Montrose-Torrance Bench Study
P1190
Report Number: ISH0701

Sampled: 08/07/09
Received: 08/08/09

METHOD BLANK/QC DATA

VOLATILE ORGANICS by GC/MS (EPA 5030B/8260B)

Analyte	Result	Reporting Limit	MDL	Units	Spike Level	Source Result	%REC	%REC Limits	RPD	RPD Limit	Data Qualifiers
Batch: 9H12030 Extracted: 08/12/09											
LCS Analyzed: 08/12/2009 (9H12030-BS1)											
cis-1,3-Dichloropropene	30.7	2.0	0.22	ug/l	25.0		123	75-125			
trans-1,3-Dichloropropene	25.2	2.0	0.32	ug/l	25.0		101	70-125			
1,1-Dichloropropene	26.6	2.0	0.28	ug/l	25.0		106	75-130			
Ethylbenzene	26.8	2.0	0.25	ug/l	25.0		107	75-125			
Hexachlorobutadiene	23.9	5.0	0.38	ug/l	25.0		95	65-135			
2-Hexanone	24.5	10	2.6	ug/l	25.0		98	45-140			
Isopropylbenzene	25.1	2.0	0.25	ug/l	25.0		100	75-130			
p-Isopropyltoluene	26.1	2.0	0.28	ug/l	25.0		104	75-125			
4-Methyl-2-pentanone (MIBK)	23.6	10	3.5	ug/l	25.0		95	45-140			
Methylene chloride	31.1	5.0	0.95	ug/l	25.0		125	55-130			
Naphthalene	28.2	5.0	0.41	ug/l	25.0		113	55-135			
n-Propylbenzene	27.5	2.0	0.27	ug/l	25.0		110	75-130			
Styrene	26.7	2.0	0.20	ug/l	25.0		107	75-130			
1,1,1,2-Tetrachloroethane	26.2	5.0	0.27	ug/l	25.0		105	70-130			
1,1,2,2-Tetrachloroethane	29.7	1.0	0.30	ug/l	25.0		119	55-130			
Tetrachloroethene	24.6	2.0	0.32	ug/l	25.0		98	70-125			
Toluene	27.4	2.0	0.36	ug/l	25.0		110	70-120			
1,2,3-Trichlorobenzene	26.3	5.0	0.30	ug/l	25.0		105	65-125			
1,2,4-Trichlorobenzene	26.6	5.0	0.48	ug/l	25.0		106	70-135			
1,1,1-Trichloroethane	25.8	2.0	0.30	ug/l	25.0		103	65-135			
1,1,2-Trichloroethane	27.5	2.0	0.30	ug/l	25.0		110	70-125			
Trichloroethene	24.8	2.0	0.26	ug/l	25.0		99	70-125			
Trichlorofluoromethane	26.8	5.0	0.34	ug/l	25.0		107	65-145			
1,2,3-Trichloropropane	29.0	10	0.40	ug/l	25.0		116	60-130			
1,2,4-Trimethylbenzene	26.1	2.0	0.23	ug/l	25.0		104	75-125			
1,3,5-Trimethylbenzene	26.5	2.0	0.26	ug/l	25.0		106	75-125			
Vinyl acetate	33.1	5.0	1.0	ug/l	25.0		133	45-145			
Vinyl chloride	25.9	0.50	0.40	ug/l	25.0		104	55-135			
m,p-Xylenes	53.1	2.0	0.60	ug/l	50.0		106	75-125			
o-Xylene	26.6	2.0	0.30	ug/l	25.0		106	75-125			
Surrogate: 4-Bromofluorobenzene	*26.3*			*ug/l*	*25.0*		*105*	*80-120*			
Surrogate: Dibromofluoromethane	*26.7*			*ug/l*	*25.0*		*107*	*80-120*			
Surrogate: Toluene-d8	*27.0*			*ug/l*	*25.0*		*108*	*80-120*			

TestAmerica Irvine

Joseph Doak
Project Manager

The results pertain only to the samples tested in the laboratory. This report shall not be reproduced, except in full, without written permission from TestAmerica.

TestAmerica
THE LEADER IN ENVIRONMENTAL TESTING

17461 Derian Avenue. Suite 100, Irvine, CA 92614 (949) 261-1022 Fax:(949) 260-3297

Applied Process Technology
3333 Vincent Road, Suite 222
Pleasant Hill, CA 94523
Attention: Keel Robinson

Project ID: Montrose-Torrance Bench Study
P1190
Report Number: ISH0701

Sampled: 08/07/09
Received: 08/08/09

METHOD BLANK/QC DATA

VOLATILE ORGANICS by GC/MS (EPA 5030B/8260B)

Analyte	Result	Reporting Limit	MDL	Units	Spike Level	Source Result	%REC	%REC Limits	RPD	RPD Limit	Data Qualifiers
Batch: 9H12030 Extracted: 08/12/09											
Matrix Spike Analyzed: 08/12/2009 (9H12030-MS1)					**Source: ISH0743-02**						
Acetone	23.7	10	4.5	ug/l	25.0	ND	95	20-150			
Benzene	29.0	2.0	0.28	ug/l	25.0	ND	116	65-125			
Bromobenzene	27.1	5.0	0.27	ug/l	25.0	ND	108	70-125			
Bromochloromethane	29.0	5.0	0.40	ug/l	25.0	ND	116	65-135			
Bromodichloromethane	31.2	2.0	0.30	ug/l	25.0	ND	125	70-135			
Bromoform	22.3	5.0	0.40	ug/l	25.0	ND	89	55-135			
Bromomethane	28.2	5.0	0.42	ug/l	25.0	ND	113	55-145			
2-Butanone (MEK)	27.4	10	4.7	ug/l	25.0	ND	110	30-145			
n-Butylbenzene	29.2	5.0	0.37	ug/l	25.0	ND	117	65-135			
sec-Butylbenzene	29.5	5.0	0.25	ug/l	25.0	ND	118	70-125			
tert-Butylbenzene	28.0	5.0	0.22	ug/l	25.0	ND	112	65-130			
Carbon Disulfide	29.0	1.0	0.48	ug/l	25.0	ND	116	40-140			
Carbon tetrachloride	31.8	0.50	0.28	ug/l	25.0	ND	127	65-140			
Chlorobenzene	27.8	2.0	0.36	ug/l	25.0	ND	111	75-125			
Chloroethane	29.4	5.0	0.40	ug/l	25.0	ND	117	55-140			
Chloroform	30.9	2.0	0.33	ug/l	25.0	1.94	116	65-135			
Chloromethane	24.9	1.5	0.40	ug/l	25.0	ND	100	45-145			
2-Chlorotoluene	28.2	5.0	0.28	ug/l	25.0	ND	113	65-135			
4-Chlorotoluene	29.2	5.0	0.29	ug/l	25.0	ND	117	70-135			
1,2-Dibromo-3-chloropropane	27.8	5.0	0.97	ug/l	25.0	ND	111	45-145			
Dibromochloromethane	29.0	2.0	0.40	ug/l	25.0	ND	116	65-140			
1,2-Dibromoethane (EDB)	27.0	2.0	0.40	ug/l	25.0	ND	108	70-130			
Dibromomethane	29.6	2.0	0.36	ug/l	25.0	ND	119	65-135			
1,2-Dichlorobenzene	27.1	2.0	0.32	ug/l	25.0	ND	108	75-125			
1,3-Dichlorobenzene	27.6	2.0	0.35	ug/l	25.0	ND	110	75-125			
1,4-Dichlorobenzene	27.0	2.0	0.37	ug/l	25.0	ND	108	75-125			
Dichlorodifluoromethane	29.9	5.0	0.26	ug/l	25.0	ND	120	25-155			
1,1-Dichloroethane	28.0	2.0	0.40	ug/l	25.0	ND	112	65-130			
1,2-Dichloroethane	26.6	0.50	0.28	ug/l	25.0	ND	107	60-140			
1,1-Dichloroethene	30.4	5.0	0.42	ug/l	25.0	ND	122	60-130			
cis-1,2-Dichloroethene	30.8	2.0	0.32	ug/l	25.0	ND	123	65-130			
trans-1,2-Dichloroethene	30.5	2.0	0.30	ug/l	25.0	ND	122	65-130			
1,2-Dichloropropane	27.2	2.0	0.35	ug/l	25.0	ND	109	65-130			
1,3-Dichloropropane	29.7	2.0	0.32	ug/l	25.0	ND	119	65-135			
2,2-Dichloropropane	31.3	2.0	0.34	ug/l	25.0	ND	125	60-145			

TestAmerica Irvine

Joseph Doak
Project Manager

The results pertain only to the samples tested in the laboratory. This report shall not be reproduced, except in full, without written permission from TestAmerica.

TestAmerica
THE LEADER IN ENVIRONMENTAL TESTING

17461 Derian Avenue. Suite 100, Irvine, CA 92614 (949) 261-1022 Fax:(949) 260-3297

Applied Process Technology
3333 Vincent Road, Suite 222
Pleasant Hill, CA 94523
Attention: Keel Robinson

Project ID: Montrose-Torrance Bench Study
P1190
Report Number: ISH0701

Sampled: 08/07/09
Received: 08/08/09

METHOD BLANK/QC DATA

VOLATILE ORGANICS by GC/MS (EPA 5030B/8260B)

Analyte	Result	Reporting Limit	MDL	Units	Spike Level	Source Result	%REC	%REC Limits	RPD	RPD Limit	Data Qualifiers
Batch: 9H12030 Extracted: 08/12/09											
Matrix Spike Analyzed: 08/12/2009 (9H12030-MS1)						**Source: ISH0743-02**					
cis-1,3-Dichloropropene	35.7	2.0	0.22	ug/l	25.0	ND	143	70-130			*M1*
trans-1,3-Dichloropropene	26.6	2.0	0.32	ug/l	25.0	ND	106	65-135			
1,1-Dichloropropene	30.2	2.0	0.28	ug/l	25.0	ND	121	70-135			
Ethylbenzene	29.1	2.0	0.25	ug/l	25.0	ND	116	65-130			
Hexachlorobutadiene	26.2	5.0	0.38	ug/l	25.0	ND	105	60-135			
2-Hexanone	25.1	10	2.6	ug/l	25.0	ND	100	25-140			
Isopropylbenzene	28.2	2.0	0.25	ug/l	25.0	ND	113	70-135			
p-Isopropyltoluene	28.0	2.0	0.28	ug/l	25.0	ND	112	65-130			
4-Methyl-2-pentanone (MIBK)	25.2	10	3.5	ug/l	25.0	ND	101	40-140			
Methylene chloride	31.7	5.0	0.95	ug/l	25.0	ND	127	50-135			
Naphthalene	28.9	5.0	0.41	ug/l	25.0	ND	115	50-140			
n-Propylbenzene	28.9	2.0	0.27	ug/l	25.0	ND	116	70-135			
Styrene	28.2	2.0	0.20	ug/l	25.0	ND	113	50-145			
1,1,1,2-Tetrachloroethane	27.6	5.0	0.27	ug/l	25.0	ND	110	65-140			
1,1,2,2-Tetrachloroethane	29.6	1.0	0.30	ug/l	25.0	ND	118	55-135			
Tetrachloroethene	27.6	2.0	0.32	ug/l	25.0	ND	111	65-130			
Toluene	30.6	2.0	0.36	ug/l	25.0	ND	122	70-125			
1,2,3-Trichlorobenzene	27.6	5.0	0.30	ug/l	25.0	ND	111	60-135			
1,2,4-Trichlorobenzene	28.4	5.0	0.48	ug/l	25.0	ND	114	65-135			
1,1,1-Trichloroethane	29.6	2.0	0.30	ug/l	25.0	ND	118	65-140			
1,1,2-Trichloroethane	30.0	2.0	0.30	ug/l	25.0	ND	120	65-130			
Trichloroethene	27.9	2.0	0.26	ug/l	25.0	ND	111	65-125			
Trichlorofluoromethane	29.5	5.0	0.34	ug/l	25.0	ND	118	60-145			
1,2,3-Trichloropropane	27.8	10	0.40	ug/l	25.0	ND	111	55-135			
1,2,4-Trimethylbenzene	28.6	2.0	0.23	ug/l	25.0	ND	114	55-135			
1,3,5-Trimethylbenzene	27.4	2.0	0.26	ug/l	25.0	ND	110	70-130			
Vinyl acetate	32.2	5.0	1.0	ug/l	25.0	ND	129	40-150			
Vinyl chloride	27.7	0.50	0.40	ug/l	25.0	ND	111	45-140			
m,p-Xylenes	56.6	2.0	0.60	ug/l	50.0	ND	113	65-130			
o-Xylene	29.0	2.0	0.30	ug/l	25.0	ND	116	65-125			
Surrogate: 4-Bromofluorobenzene	*26.1*			*ug/l*	*25.0*		*104*	*80-120*			
Surrogate: Dibromofluoromethane	*26.5*			*ug/l*	*25.0*		*106*	*80-120*			
Surrogate: Toluene-d8	*28.1*			*ug/l*	*25.0*		*112*	*80-120*			

TestAmerica Irvine

Joseph Doak
Project Manager

The results pertain only to the samples tested in the laboratory. This report shall not be reproduced, except in full, without written permission from TestAmerica.

TestAmerica
THE LEADER IN ENVIRONMENTAL TESTING

17461 Derian Avenue. Suite 100, Irvine, CA 92614 (949) 261-1022 Fax:(949) 260-3297

Applied Process Technology
3333 Vincent Road, Suite 222
Pleasant Hill, CA 94523
Attention: Keel Robinson

Project ID: Montrose-Torrance Bench Study
P1190
Report Number: ISH0701

Sampled: 08/07/09
Received: 08/08/09

METHOD BLANK/QC DATA

VOLATILE ORGANICS by GC/MS (EPA 5030B/8260B)

Analyte	Result	Reporting Limit	MDL	Units	Spike Level	Source Result	%REC	%REC Limits	RPD	RPD Limit	Data Qualifiers
Batch: 9H12030 Extracted: 08/12/09											
Matrix Spike Dup Analyzed: 08/12/2009 (9H12030-MSD1)						**Source: ISH0743-02**					
Acetone	23.2	10	4.5	ug/l	25.0	ND	93	20-150	2	35	
Benzene	29.4	2.0	0.28	ug/l	25.0	ND	117	65-125	1	20	
Bromobenzene	29.4	5.0	0.27	ug/l	25.0	ND	118	70-125	8	20	
Bromochloromethane	28.2	5.0	0.40	ug/l	25.0	ND	113	65-135	3	25	
Bromodichloromethane	31.4	2.0	0.30	ug/l	25.0	ND	126	70-135	1	20	
Bromoform	24.1	5.0	0.40	ug/l	25.0	ND	96	55-135	8	25	
Bromomethane	27.6	5.0	0.42	ug/l	25.0	ND	110	55-145	2	25	
2-Butanone (MEK)	29.2	10	4.7	ug/l	25.0	ND	117	30-145	6	40	
n-Butylbenzene	33.0	5.0	0.37	ug/l	25.0	ND	132	65-135	12	20	
sec-Butylbenzene	32.2	5.0	0.25	ug/l	25.0	ND	129	70-125	9	20	*M1*
tert-Butylbenzene	31.1	5.0	0.22	ug/l	25.0	ND	124	65-130	10	20	
Carbon Disulfide	29.1	1.0	0.48	ug/l	25.0	ND	116	40-140	1	20	
Carbon tetrachloride	31.8	0.50	0.28	ug/l	25.0	ND	127	65-140	0	25	
Chlorobenzene	29.0	2.0	0.36	ug/l	25.0	ND	116	75-125	4	20	
Chloroethane	28.2	5.0	0.40	ug/l	25.0	ND	113	55-140	4	25	
Chloroform	30.8	2.0	0.33	ug/l	25.0	1.94	115	65-135	0	20	
Chloromethane	24.5	1.5	0.40	ug/l	25.0	ND	98	45-145	2	25	
2-Chlorotoluene	31.0	5.0	0.28	ug/l	25.0	ND	124	65-135	9	20	
4-Chlorotoluene	31.5	5.0	0.29	ug/l	25.0	ND	126	70-135	8	20	
1,2-Dibromo-3-chloropropane	30.7	5.0	0.97	ug/l	25.0	ND	123	45-145	10	30	
Dibromochloromethane	31.0	2.0	0.40	ug/l	25.0	ND	124	65-140	7	25	
1,2-Dibromoethane (EDB)	29.9	2.0	0.40	ug/l	25.0	ND	120	70-130	10	25	
Dibromomethane	30.1	2.0	0.36	ug/l	25.0	ND	120	65-135	2	25	
1,2-Dichlorobenzene	29.2	2.0	0.32	ug/l	25.0	ND	117	75-125	8	20	
1,3-Dichlorobenzene	30.2	2.0	0.35	ug/l	25.0	ND	121	75-125	9	20	
1,4-Dichlorobenzene	30.0	2.0	0.37	ug/l	25.0	ND	120	75-125	10	20	
Dichlorodifluoromethane	29.5	5.0	0.26	ug/l	25.0	ND	118	25-155	1	30	
1,1-Dichloroethane	28.4	2.0	0.40	ug/l	25.0	ND	114	65-130	2	20	
1,2-Dichloroethane	27.0	0.50	0.28	ug/l	25.0	ND	108	60-140	1	20	
1,1-Dichloroethene	30.1	5.0	0.42	ug/l	25.0	ND	120	60-130	1	20	
cis-1,2-Dichloroethene	30.0	2.0	0.32	ug/l	25.0	ND	120	65-130	3	20	
trans-1,2-Dichloroethene	30.3	2.0	0.30	ug/l	25.0	ND	121	65-130	1	20	
1,2-Dichloropropane	28.5	2.0	0.35	ug/l	25.0	ND	114	65-130	5	20	
1,3-Dichloropropane	31.3	2.0	0.32	ug/l	25.0	ND	125	65-135	5	25	
2,2-Dichloropropane	31.5	2.0	0.34	ug/l	25.0	ND	126	60-145	1	25	

TestAmerica Irvine

Joseph Doak
Project Manager

The results pertain only to the samples tested in the laboratory. This report shall not be reproduced, except in full, without written permission from TestAmerica.

TestAmerica
THE LEADER IN ENVIRONMENTAL TESTING

17461 Derian Avenue. Suite 100, Irvine, CA 92614 (949) 261-1022 Fax:(949) 260-3297

Applied Process Technology
3333 Vincent Road, Suite 222
Pleasant Hill, CA 94523
Attention: Keel Robinson

Project ID: Montrose-Torrance Bench Study
P1190
Report Number: ISH0701

Sampled: 08/07/09
Received: 08/08/09

METHOD BLANK/QC DATA

VOLATILE ORGANICS by GC/MS (EPA 5030B/8260B)

Analyte	Result	Reporting Limit	MDL	Units	Spike Level	Source Result	%REC	%REC Limits	RPD	RPD Limit	Data Qualifiers
Batch: 9H12030 Extracted: 08/12/09											
Matrix Spike Dup Analyzed: 08/12/2009 (9H12030-MSD1)					**Source: ISH0743-02**						
cis-1,3-Dichloropropene	35.0	2.0	0.22	ug/l	25.0	ND	140	70-130	2	20	*M1*
trans-1,3-Dichloropropene	27.4	2.0	0.32	ug/l	25.0	ND	110	65-135	3	25	
1,1-Dichloropropene	31.0	2.0	0.28	ug/l	25.0	ND	124	70-135	3	20	
Ethylbenzene	31.0	2.0	0.25	ug/l	25.0	ND	124	65-130	6	20	
Hexachlorobutadiene	28.1	5.0	0.38	ug/l	25.0	ND	112	60-135	7	20	
2-Hexanone	27.7	10	2.6	ug/l	25.0	ND	111	25-140	10	35	
Isopropylbenzene	30.8	2.0	0.25	ug/l	25.0	ND	123	70-135	9	20	
p-Isopropyltoluene	30.1	2.0	0.28	ug/l	25.0	ND	120	65-130	7	20	
4-Methyl-2-pentanone (MIBK)	25.4	10	3.5	ug/l	25.0	ND	102	40-140	1	35	
Methylene chloride	31.6	5.0	0.95	ug/l	25.0	ND	126	50-135	0	20	
Naphthalene	31.6	5.0	0.41	ug/l	25.0	ND	126	50-140	9	30	
n-Propylbenzene	32.6	2.0	0.27	ug/l	25.0	ND	130	70-135	12	20	
Styrene	30.9	2.0	0.20	ug/l	25.0	ND	123	50-145	9	30	
1,1,1,2-Tetrachloroethane	29.6	5.0	0.27	ug/l	25.0	ND	118	65-140	7	20	
1,1,2,2-Tetrachloroethane	32.2	1.0	0.30	ug/l	25.0	ND	129	55-135	9	30	
Tetrachloroethene	29.5	2.0	0.32	ug/l	25.0	ND	118	65-130	7	20	
Toluene	29.2	2.0	0.36	ug/l	25.0	ND	117	70-125	5	20	
1,2,3-Trichlorobenzene	30.2	5.0	0.30	ug/l	25.0	ND	121	60-135	9	20	
1,2,4-Trichlorobenzene	31.6	5.0	0.48	ug/l	25.0	ND	126	65-135	11	20	
1,1,1-Trichloroethane	29.2	2.0	0.30	ug/l	25.0	ND	117	65-140	1	20	
1,1,2-Trichloroethane	30.5	2.0	0.30	ug/l	25.0	ND	122	65-130	2	25	
Trichloroethene	28.2	2.0	0.26	ug/l	25.0	ND	113	65-125	1	20	
Trichlorofluoromethane	29.8	5.0	0.34	ug/l	25.0	ND	119	60-145	1	25	
1,2,3-Trichloropropane	30.6	10	0.40	ug/l	25.0	ND	122	55-135	9	30	
1,2,4-Trimethylbenzene	30.2	2.0	0.23	ug/l	25.0	ND	121	55-135	5	25	
1,3,5-Trimethylbenzene	30.2	2.0	0.26	ug/l	25.0	ND	121	70-130	10	20	
Vinyl acetate	32.2	5.0	1.0	ug/l	25.0	ND	129	40-150	0	30	
Vinyl chloride	27.8	0.50	0.40	ug/l	25.0	ND	111	45-140	0	30	
m,p-Xylenes	60.5	2.0	0.60	ug/l	50.0	ND	121	65-130	7	25	
o-Xylene	31.6	2.0	0.30	ug/l	25.0	ND	126	65-125	9	20	*M1*
Surrogate: 4-Bromofluorobenzene	*26.3*			*ug/l*	*25.0*		*105*	*80-120*			
Surrogate: Dibromofluoromethane	*25.2*			*ug/l*	*25.0*		*101*	*80-120*			
Surrogate: Toluene-d8	*27.6*			*ug/l*	*25.0*		*111*	*80-120*			

TestAmerica Irvine

Joseph Doak
Project Manager

The results pertain only to the samples tested in the laboratory. This report shall not be reproduced, except in full, without written permission from TestAmerica.

TestAmerica
THE LEADER IN ENVIRONMENTAL TESTING

17461 Derian Avenue. Suite 100, Irvine, CA 92614 (949) 261-1022 Fax:(949) 260-3297

Applied Process Technology
3333 Vincent Road, Suite 222
Pleasant Hill, CA 94523
Attention: Keel Robinson

Project ID: Montrose-Torrance Bench Study
P1190
Report Number: ISH0701

Sampled: 08/07/09
Received: 08/08/09

METHOD BLANK/QC DATA

VOLATILE ORGANICS by GC/MS (EPA 5030B/8260B)

Analyte	Result	Reporting Limit	MDL	Units	Spike Level	Source Result	%REC	%REC Limits	RPD	RPD Limit	Data Qualifiers
Batch: 9H12034 Extracted: 08/12/09											
Blank Analyzed: 08/12/2009 (9H12034-BLK1)											
Acetone	ND	10	4.5	ug/l							
Benzene	ND	2.0	0.28	ug/l							
Bromobenzene	ND	5.0	0.27	ug/l							
Bromochloromethane	ND	5.0	0.40	ug/l							
Bromodichloromethane	ND	2.0	0.30	ug/l							
Bromoform	ND	5.0	0.40	ug/l							
Bromomethane	ND	5.0	0.42	ug/l							
2-Butanone (MEK)	ND	10	4.7	ug/l							
n-Butylbenzene	ND	5.0	0.37	ug/l							
sec-Butylbenzene	ND	5.0	0.25	ug/l							
tert-Butylbenzene	ND	5.0	0.22	ug/l							
Carbon Disulfide	ND	1.0	0.48	ug/l							
Carbon tetrachloride	ND	0.50	0.28	ug/l							
Chlorobenzene	ND	2.0	0.36	ug/l							
Chloroethane	ND	5.0	0.40	ug/l							
Chloroform	ND	2.0	0.33	ug/l							
Chloromethane	ND	1.5	0.40	ug/l							
2-Chlorotoluene	ND	5.0	0.28	ug/l							
4-Chlorotoluene	ND	5.0	0.29	ug/l							
1,2-Dibromo-3-chloropropane	ND	5.0	0.97	ug/l							
Dibromochloromethane	ND	2.0	0.40	ug/l							
1,2-Dibromoethane (EDB)	ND	2.0	0.40	ug/l							
Dibromomethane	ND	2.0	0.36	ug/l							
1,2-Dichlorobenzene	ND	2.0	0.32	ug/l							
1,3-Dichlorobenzene	ND	2.0	0.35	ug/l							
1,4-Dichlorobenzene	ND	2.0	0.37	ug/l							
Dichlorodifluoromethane	ND	5.0	0.26	ug/l							
1,1-Dichloroethane	ND	2.0	0.40	ug/l							
1,2-Dichloroethane	ND	0.50	0.28	ug/l							
1,1-Dichloroethene	ND	5.0	0.42	ug/l							
cis-1,2-Dichloroethene	ND	2.0	0.32	ug/l							
trans-1,2-Dichloroethene	ND	2.0	0.30	ug/l							
1,2-Dichloropropane	ND	2.0	0.35	ug/l							
1,3-Dichloropropane	ND	2.0	0.32	ug/l							
2,2-Dichloropropane	ND	2.0	0.34	ug/l							

TestAmerica Irvine

Joseph Doak
Project Manager

The results pertain only to the samples tested in the laboratory. This report shall not be reproduced, except in full, without written permission from TestAmerica.

TestAmerica
THE LEADER IN ENVIRONMENTAL TESTING

17461 Derian Avenue. Suite 100, Irvine, CA 92614 (949) 261-1022 Fax:(949) 260-3297

Applied Process Technology
3333 Vincent Road, Suite 222
Pleasant Hill, CA 94523
Attention: Keel Robinson

Project ID: Montrose-Torrance Bench Study
P1190
Report Number: ISH0701

Sampled: 08/07/09
Received: 08/08/09

METHOD BLANK/QC DATA

VOLATILE ORGANICS by GC/MS (EPA 5030B/8260B)

Analyte	Result	Reporting Limit	MDL	Units	Spike Level	Source Result	%REC	%REC Limits	RPD	RPD Limit	Data Qualifiers
Batch: 9H12034 Extracted: 08/12/09											
Blank Analyzed: 08/12/2009 (9H12034-BLK1)											
cis-1,3-Dichloropropene	ND	2.0	0.22	ug/l							
trans-1,3-Dichloropropene	ND	2.0	0.32	ug/l							
1,1-Dichloropropene	ND	2.0	0.28	ug/l							
1,2-Dichloro-1,1,2-trifluoroethane	ND	2.0	1.1	ug/l							
Ethylbenzene	ND	2.0	0.25	ug/l							
Hexachlorobutadiene	ND	5.0	0.38	ug/l							
2-Hexanone	ND	10	2.6	ug/l							
Isopropylbenzene	ND	2.0	0.25	ug/l							
p-Isopropyltoluene	ND	2.0	0.28	ug/l							
4-Methyl-2-pentanone (MIBK)	ND	10	3.5	ug/l							
Methylene chloride	ND	5.0	0.95	ug/l							
Naphthalene	ND	5.0	0.41	ug/l							
n-Propylbenzene	ND	2.0	0.27	ug/l							
Styrene	ND	2.0	0.20	ug/l							
1,1,1,2-Tetrachloroethane	ND	5.0	0.27	ug/l							
1,1,2,2-Tetrachloroethane	ND	1.0	0.30	ug/l							
Tetrachloroethene	ND	2.0	0.32	ug/l							
Toluene	ND	2.0	0.36	ug/l							
1,2,3-Trichlorobenzene	ND	5.0	0.30	ug/l							
1,2,4-Trichlorobenzene	ND	5.0	0.48	ug/l							
1,1,1-Trichloroethane	ND	2.0	0.30	ug/l							
1,1,2-Trichloroethane	ND	2.0	0.30	ug/l							
Trichloroethene	ND	2.0	0.26	ug/l							
Trichlorofluoromethane	ND	5.0	0.34	ug/l							
1,2,3-Trichloropropane	ND	10	0.40	ug/l							
1,2,4-Trimethylbenzene	ND	2.0	0.23	ug/l							
1,3,5-Trimethylbenzene	ND	2.0	0.26	ug/l							
Vinyl acetate	ND	5.0	1.0	ug/l							
Vinyl chloride	ND	0.50	0.40	ug/l							
m,p-Xylenes	ND	2.0	0.60	ug/l							
o-Xylene	ND	2.0	0.30	ug/l							
Xylenes, Total	ND	2.0	0.90	ug/l							
Surrogate: 4-Bromofluorobenzene	*25.5*			*ug/l*	*25.0*		*102*	*80-120*			
Surrogate: Dibromofluoromethane	*27.8*			*ug/l*	*25.0*		*111*	*80-120*			
Surrogate: Toluene-d8	*26.6*			*ug/l*	*25.0*		*106*	*80-120*			

TestAmerica Irvine

Joseph Doak
Project Manager

The results pertain only to the samples tested in the laboratory. This report shall not be reproduced, except in full, without written permission from TestAmerica.

TestAmerica
THE LEADER IN ENVIRONMENTAL TESTING

17461 Derian Avenue. Suite 100, Irvine, CA 92614 (949) 261-1022 Fax:(949) 260-3297

Applied Process Technology
3333 Vincent Road, Suite 222
Pleasant Hill, CA 94523
Attention: Keel Robinson

Project ID: Montrose-Torrance Bench Study
P1190
Report Number: ISH0701

Sampled: 08/07/09
Received: 08/08/09

METHOD BLANK/QC DATA

VOLATILE ORGANICS by GC/MS (EPA 5030B/8260B)

Analyte	Result	Reporting Limit	MDL	Units	Spike Level	Source Result	%REC	%REC Limits	RPD	RPD Limit	Data Qualifiers
Batch: 9H12034 Extracted: 08/12/09											
LCS Analyzed: 08/12/2009 (9H12034-BS1)											
Acetone	28.7	10	4.5	ug/l	25.0		115	30-140			
Benzene	24.8	2.0	0.28	ug/l	25.0		99	70-120			
Bromobenzene	23.0	5.0	0.27	ug/l	25.0		92	75-120			
Bromochloromethane	25.8	5.0	0.40	ug/l	25.0		103	70-130			
Bromodichloromethane	28.4	2.0	0.30	ug/l	25.0		114	70-135			
Bromoform	20.6	5.0	0.40	ug/l	25.0		82	55-130			
Bromomethane	27.9	5.0	0.42	ug/l	25.0		112	65-140			
2-Butanone (MEK)	27.4	10	4.7	ug/l	25.0		110	40-140			
n-Butylbenzene	26.7	5.0	0.37	ug/l	25.0		107	70-130			
sec-Butylbenzene	25.9	5.0	0.25	ug/l	25.0		104	70-125			
tert-Butylbenzene	25.5	5.0	0.22	ug/l	25.0		102	70-125			
Carbon Disulfide	27.7	1.0	0.48	ug/l	25.0		111	50-130			
Carbon tetrachloride	28.9	0.50	0.28	ug/l	25.0		116	65-140			
Chlorobenzene	24.5	2.0	0.36	ug/l	25.0		98	75-120			
Chloroethane	26.3	5.0	0.40	ug/l	25.0		105	60-140			
Chloroform	29.0	2.0	0.33	ug/l	25.0		116	70-130			
Chloromethane	25.2	1.5	0.40	ug/l	25.0		101	50-140			
2-Chlorotoluene	26.5	5.0	0.28	ug/l	25.0		106	70-125			
4-Chlorotoluene	26.4	5.0	0.29	ug/l	25.0		105	75-125			
1,2-Dibromo-3-chloropropane	27.1	5.0	0.97	ug/l	25.0		108	50-135			
Dibromochloromethane	27.5	2.0	0.40	ug/l	25.0		110	70-140			
1,2-Dibromoethane (EDB)	24.4	2.0	0.40	ug/l	25.0		98	75-125			
Dibromomethane	27.5	2.0	0.36	ug/l	25.0		110	70-125			
1,2-Dichlorobenzene	24.4	2.0	0.32	ug/l	25.0		98	75-120			
1,3-Dichlorobenzene	24.6	2.0	0.35	ug/l	25.0		98	75-120			
1,4-Dichlorobenzene	24.4	2.0	0.37	ug/l	25.0		98	75-120			
Dichlorodifluoromethane	25.0	5.0	0.26	ug/l	25.0		100	35-155			
1,1-Dichloroethane	27.2	2.0	0.40	ug/l	25.0		109	70-125			
1,2-Dichloroethane	28.0	0.50	0.28	ug/l	25.0		112	60-140			
1,1-Dichloroethene	30.5	5.0	0.42	ug/l	25.0		122	70-125			
cis-1,2-Dichloroethene	26.7	2.0	0.32	ug/l	25.0		107	70-125			
trans-1,2-Dichloroethene	27.2	2.0	0.30	ug/l	25.0		109	70-125			
1,2-Dichloropropane	25.6	2.0	0.35	ug/l	25.0		103	70-125			
1,3-Dichloropropane	25.9	2.0	0.32	ug/l	25.0		104	70-120			
2,2-Dichloropropane	30.1	2.0	0.34	ug/l	25.0		120	65-140			

TestAmerica Irvine

Joseph Doak
Project Manager

The results pertain only to the samples tested in the laboratory. This report shall not be reproduced, except in full, without written permission from TestAmerica.

TestAmerica
THE LEADER IN ENVIRONMENTAL TESTING

17461 Derian Avenue. Suite 100, Irvine, CA 92614 (949) 261-1022 Fax:(949) 260-3297

Applied Process Technology
3333 Vincent Road, Suite 222
Pleasant Hill, CA 94523
Attention: Keel Robinson

Project ID: Montrose-Torrance Bench Study
P1190
Report Number: ISH0701

Sampled: 08/07/09
Received: 08/08/09

METHOD BLANK/QC DATA

VOLATILE ORGANICS by GC/MS (EPA 5030B/8260B)

Analyte	Result	Reporting Limit	MDL	Units	Spike Level	Source Result	%REC	%REC Limits	RPD	RPD Limit	Data Qualifiers
Batch: 9H12034 Extracted: 08/12/09											
LCS Analyzed: 08/12/2009 (9H12034-BS1)											
cis-1,3-Dichloropropene	24.9	2.0	0.22	ug/l	25.0		100	75-125			
trans-1,3-Dichloropropene	25.1	2.0	0.32	ug/l	25.0		100	70-125			
1,1-Dichloropropene	27.0	2.0	0.28	ug/l	25.0		108	75-130			
Ethylbenzene	26.4	2.0	0.25	ug/l	25.0		105	75-125			
Hexachlorobutadiene	24.0	5.0	0.38	ug/l	25.0		96	65-135			
2-Hexanone	28.3	10	2.6	ug/l	25.0		113	45-140			
Isopropylbenzene	26.1	2.0	0.25	ug/l	25.0		105	75-130			
p-Isopropyltoluene	24.8	2.0	0.28	ug/l	25.0		99	75-125			
4-Methyl-2-pentanone (MIBK)	28.0	10	3.5	ug/l	25.0		112	45-140			
Methylene chloride	29.5	5.0	0.95	ug/l	25.0		118	55-130			
Naphthalene	24.8	5.0	0.41	ug/l	25.0		99	55-135			
n-Propylbenzene	26.3	2.0	0.27	ug/l	25.0		105	75-130			
Styrene	24.8	2.0	0.20	ug/l	25.0		99	75-130			
1,1,1,2-Tetrachloroethane	25.0	5.0	0.27	ug/l	25.0		100	70-130			
1,1,2,2-Tetrachloroethane	26.6	1.0	0.30	ug/l	25.0		106	55-130			
Tetrachloroethene	24.7	2.0	0.32	ug/l	25.0		99	70-125			
Toluene	25.5	2.0	0.36	ug/l	25.0		102	70-120			
1,2,3-Trichlorobenzene	24.3	5.0	0.30	ug/l	25.0		97	65-125			
1,2,4-Trichlorobenzene	24.4	5.0	0.48	ug/l	25.0		98	70-135			
1,1,1-Trichloroethane	30.4	2.0	0.30	ug/l	25.0		122	65-135			
1,1,2-Trichloroethane	26.6	2.0	0.30	ug/l	25.0		107	70-125			
Trichloroethene	25.2	2.0	0.26	ug/l	25.0		101	70-125			
Trichlorofluoromethane	29.9	5.0	0.34	ug/l	25.0		120	65-145			
1,2,3-Trichloropropane	25.4	10	0.40	ug/l	25.0		102	60-130			
1,2,4-Trimethylbenzene	25.5	2.0	0.23	ug/l	25.0		102	75-125			
1,3,5-Trimethylbenzene	25.7	2.0	0.26	ug/l	25.0		103	75-125			
Vinyl acetate	30.4	5.0	1.0	ug/l	25.0		121	45-145			
Vinyl chloride	28.8	0.50	0.40	ug/l	25.0		115	55-135			
m,p-Xylenes	50.4	2.0	0.60	ug/l	50.0		101	75-125			
o-Xylene	25.3	2.0	0.30	ug/l	25.0		101	75-125			
Surrogate: 4-Bromofluorobenzene	*27.2*			*ug/l*	*25.0*		*109*	*80-120*			
Surrogate: Dibromofluoromethane	*27.9*			*ug/l*	*25.0*		*112*	*80-120*			
Surrogate: Toluene-d8	*26.1*			*ug/l*	*25.0*		*104*	*80-120*			

TestAmerica Irvine

Joseph Doak
Project Manager

The results pertain only to the samples tested in the laboratory. This report shall not be reproduced, except in full, without written permission from TestAmerica.

TestAmerica
THE LEADER IN ENVIRONMENTAL TESTING

17461 Derian Avenue. Suite 100, Irvine, CA 92614 (949) 261-1022 Fax:(949) 260-3297

Applied Process Technology
3333 Vincent Road, Suite 222
Pleasant Hill, CA 94523
Attention: Keel Robinson

Project ID: Montrose-Torrance Bench Study
P1190
Report Number: ISH0701

Sampled: 08/07/09
Received: 08/08/09

METHOD BLANK/QC DATA

VOLATILE ORGANICS by GC/MS (EPA 5030B/8260B)

Analyte	Result	Reporting Limit	MDL	Units	Spike Level	Source Result	%REC	%REC Limits	RPD	RPD Limit	Data Qualifiers
Batch: 9H12034 Extracted: 08/12/09											
Matrix Spike Analyzed: 08/12/2009 (9H12034-MS1)					**Source: ISH0728-10**						
Acetone	26.1	10	4.5	ug/l	25.0	ND	104	20-150			
Benzene	25.6	2.0	0.28	ug/l	25.0	ND	103	65-125			
Bromobenzene	23.5	5.0	0.27	ug/l	25.0	ND	94	70-125			
Bromochloromethane	26.6	5.0	0.40	ug/l	25.0	ND	107	65-135			
Bromodichloromethane	28.7	2.0	0.30	ug/l	25.0	ND	115	70-135			
Bromoform	20.9	5.0	0.40	ug/l	25.0	ND	83	55-135			
Bromomethane	29.0	5.0	0.42	ug/l	25.0	ND	116	55-145			
2-Butanone (MEK)	26.5	10	4.7	ug/l	25.0	ND	106	30-145			
n-Butylbenzene	27.5	5.0	0.37	ug/l	25.0	ND	110	65-135			
sec-Butylbenzene	26.6	5.0	0.25	ug/l	25.0	ND	106	70-125			
tert-Butylbenzene	26.3	5.0	0.22	ug/l	25.0	ND	105	65-130			
Carbon Disulfide	28.9	1.0	0.48	ug/l	25.0	ND	116	40-140			
Carbon tetrachloride	29.9	0.50	0.28	ug/l	25.0	ND	120	65-140			
Chlorobenzene	25.5	2.0	0.36	ug/l	25.0	ND	102	75-125			
Chloroethane	28.0	5.0	0.40	ug/l	25.0	ND	112	55-140			
Chloroform	29.9	2.0	0.33	ug/l	25.0	ND	120	65-135			
Chloromethane	26.4	1.5	0.40	ug/l	25.0	ND	105	45-145			
2-Chlorotoluene	27.2	5.0	0.28	ug/l	25.0	ND	109	65-135			
4-Chlorotoluene	26.9	5.0	0.29	ug/l	25.0	ND	108	70-135			
1,2-Dibromo-3-chloropropane	25.9	5.0	0.97	ug/l	25.0	ND	104	45-145			
Dibromochloromethane	27.7	2.0	0.40	ug/l	25.0	ND	111	65-140			
1,2-Dibromoethane (EDB)	25.3	2.0	0.40	ug/l	25.0	ND	101	70-130			
Dibromomethane	27.6	2.0	0.36	ug/l	25.0	ND	110	65-135			
1,2-Dichlorobenzene	24.8	2.0	0.32	ug/l	25.0	ND	99	75-125			
1,3-Dichlorobenzene	25.5	2.0	0.35	ug/l	25.0	ND	102	75-125			
1,4-Dichlorobenzene	25.2	2.0	0.37	ug/l	25.0	ND	101	75-125			
Dichlorodifluoromethane	26.3	5.0	0.26	ug/l	25.0	ND	105	25-155			
1,1-Dichloroethane	27.9	2.0	0.40	ug/l	25.0	ND	112	65-130			
1,2-Dichloroethane	28.4	0.50	0.28	ug/l	25.0	ND	114	60-140			
1,1-Dichloroethene	31.4	5.0	0.42	ug/l	25.0	ND	125	60-130			
cis-1,2-Dichloroethene	27.7	2.0	0.32	ug/l	25.0	ND	111	65-130			
trans-1,2-Dichloroethene	28.9	2.0	0.30	ug/l	25.0	ND	116	65-130			
1,2-Dichloropropane	26.0	2.0	0.35	ug/l	25.0	ND	104	65-130			
1,3-Dichloropropane	26.7	2.0	0.32	ug/l	25.0	ND	107	65-135			
2,2-Dichloropropane	33.1	2.0	0.34	ug/l	25.0	ND	132	60-145			

TestAmerica Irvine

Joseph Doak
Project Manager

The results pertain only to the samples tested in the laboratory. This report shall not be reproduced, except in full, without written permission from TestAmerica.

TestAmerica
THE LEADER IN ENVIRONMENTAL TESTING

17461 Derian Avenue. Suite 100, Irvine, CA 92614 (949) 261-1022 Fax:(949) 260-3297

Applied Process Technology
3333 Vincent Road, Suite 222
Pleasant Hill, CA 94523
Attention: Keel Robinson

Project ID: Montrose-Torrance Bench Study
P1190
Report Number: ISH0701

Sampled: 08/07/09
Received: 08/08/09

METHOD BLANK/QC DATA

VOLATILE ORGANICS by GC/MS (EPA 5030B/8260B)

Analyte	Result	Reporting Limit	MDL	Units	Spike Level	Source Result	%REC	%REC Limits	RPD	RPD Limit	Data Qualifiers
Batch: 9H12034 Extracted: 08/12/09											
Matrix Spike Analyzed: 08/12/2009 (9H12034-MS1)					**Source: ISH0728-10**						
cis-1,3-Dichloropropene	25.2	2.0	0.22	ug/l	25.0	ND	101	70-130			
trans-1,3-Dichloropropene	25.5	2.0	0.32	ug/l	25.0	ND	102	65-135			
1,1-Dichloropropene	28.4	2.0	0.28	ug/l	25.0	ND	113	70-135			
Ethylbenzene	27.6	2.0	0.25	ug/l	25.0	ND	110	65-130			
Hexachlorobutadiene	24.4	5.0	0.38	ug/l	25.0	ND	98	60-135			
2-Hexanone	27.4	10	2.6	ug/l	25.0	ND	110	25-140			
Isopropylbenzene	26.9	2.0	0.25	ug/l	25.0	ND	107	70-135			
p-Isopropyltoluene	25.6	2.0	0.28	ug/l	25.0	ND	102	65-130			
4-Methyl-2-pentanone (MIBK)	27.7	10	3.5	ug/l	25.0	ND	111	40-140			
Methylene chloride	29.3	5.0	0.95	ug/l	25.0	ND	117	50-135			
Naphthalene	24.9	5.0	0.41	ug/l	25.0	ND	99	50-140			
n-Propylbenzene	27.2	2.0	0.27	ug/l	25.0	ND	109	70-135			
Styrene	25.4	2.0	0.20	ug/l	25.0	ND	102	50-145			
1,1,1,2-Tetrachloroethane	25.5	5.0	0.27	ug/l	25.0	ND	102	65-140			
1,1,2,2-Tetrachloroethane	26.1	1.0	0.30	ug/l	25.0	ND	104	55-135			
Tetrachloroethene	25.8	2.0	0.32	ug/l	25.0	ND	103	65-130			
Toluene	26.2	2.0	0.36	ug/l	25.0	ND	105	70-125			
1,2,3-Trichlorobenzene	24.6	5.0	0.30	ug/l	25.0	ND	98	60-135			
1,2,4-Trichlorobenzene	24.9	5.0	0.48	ug/l	25.0	ND	100	65-135			
1,1,1-Trichloroethane	31.7	2.0	0.30	ug/l	25.0	ND	127	65-140			
1,1,2-Trichloroethane	26.9	2.0	0.30	ug/l	25.0	ND	108	65-130			
Trichloroethene	25.8	2.0	0.26	ug/l	25.0	ND	103	65-125			
Trichlorofluoromethane	31.2	5.0	0.34	ug/l	25.0	ND	125	60-145			
1,2,3-Trichloropropane	25.1	10	0.40	ug/l	25.0	ND	100	55-135			
1,2,4-Trimethylbenzene	26.1	2.0	0.23	ug/l	25.0	ND	104	55-135			
1,3,5-Trimethylbenzene	26.4	2.0	0.26	ug/l	25.0	ND	105	70-130			
Vinyl acetate	31.2	5.0	1.0	ug/l	25.0	ND	125	40-150			
Vinyl chloride	30.3	0.50	0.40	ug/l	25.0	ND	121	45-140			
m,p-Xylenes	52.3	2.0	0.60	ug/l	50.0	ND	105	65-130			
o-Xylene	26.5	2.0	0.30	ug/l	25.0	ND	106	65-125			
Surrogate: 4-Bromofluorobenzene	*27.9*			*ug/l*	*25.0*		*112*	*80-120*			
Surrogate: Dibromofluoromethane	*28.4*			*ug/l*	*25.0*		*113*	*80-120*			
Surrogate: Toluene-d8	*25.9*			*ug/l*	*25.0*		*104*	*80-120*			

TestAmerica Irvine

Joseph Doak
Project Manager

The results pertain only to the samples tested in the laboratory. This report shall not be reproduced, except in full, without written permission from TestAmerica.

TestAmerica
THE LEADER IN ENVIRONMENTAL TESTING

17461 Derian Avenue. Suite 100, Irvine, CA 92614 (949) 261-1022 Fax:(949) 260-3297

Applied Process Technology
3333 Vincent Road, Suite 222
Pleasant Hill, CA 94523
Attention: Keel Robinson

Project ID: Montrose-Torrance Bench Study
P1190
Report Number: ISH0701

Sampled: 08/07/09
Received: 08/08/09

METHOD BLANK/QC DATA

VOLATILE ORGANICS by GC/MS (EPA 5030B/8260B)

Analyte	Result	Reporting Limit	MDL	Units	Spike Level	Source Result	%REC	%REC Limits	RPD	RPD Limit	Data Qualifiers
Batch: 9H12034 Extracted: 08/12/09											
Matrix Spike Dup Analyzed: 08/12/2009 (9H12034-MSD1)						**Source: ISH0728-10**					
Acetone	27.3	10	4.5	ug/l	25.0	ND	109	20-150	5	35	
Benzene	27.8	2.0	0.28	ug/l	25.0	ND	111	65-125	8	20	
Bromobenzene	25.7	5.0	0.27	ug/l	25.0	ND	103	70-125	9	20	
Bromochloromethane	29.0	5.0	0.40	ug/l	25.0	ND	116	65-135	8	25	
Bromodichloromethane	31.7	2.0	0.30	ug/l	25.0	ND	127	70-135	10	20	
Bromoform	23.0	5.0	0.40	ug/l	25.0	ND	92	55-135	10	25	
Bromomethane	30.2	5.0	0.42	ug/l	25.0	ND	121	55-145	4	25	
2-Butanone (MEK)	30.6	10	4.7	ug/l	25.0	ND	123	30-145	15	40	
n-Butylbenzene	29.1	5.0	0.37	ug/l	25.0	ND	116	65-135	5	20	
sec-Butylbenzene	28.2	5.0	0.25	ug/l	25.0	ND	113	70-125	6	20	
tert-Butylbenzene	27.9	5.0	0.22	ug/l	25.0	ND	112	65-130	6	20	
Carbon Disulfide	30.4	1.0	0.48	ug/l	25.0	ND	121	40-140	5	20	
Carbon tetrachloride	32.0	0.50	0.28	ug/l	25.0	ND	128	65-140	7	25	
Chlorobenzene	27.5	2.0	0.36	ug/l	25.0	ND	110	75-125	8	20	
Chloroethane	29.6	5.0	0.40	ug/l	25.0	ND	118	55-140	5	25	
Chloroform	31.6	2.0	0.33	ug/l	25.0	ND	127	65-135	6	20	
Chloromethane	28.7	1.5	0.40	ug/l	25.0	ND	115	45-145	9	25	
2-Chlorotoluene	29.0	5.0	0.28	ug/l	25.0	ND	116	65-135	6	20	
4-Chlorotoluene	28.7	5.0	0.29	ug/l	25.0	ND	115	70-135	6	20	
1,2-Dibromo-3-chloropropane	31.0	5.0	0.97	ug/l	25.0	ND	124	45-145	18	30	
Dibromochloromethane	31.0	2.0	0.40	ug/l	25.0	ND	124	65-140	11	25	
1,2-Dibromoethane (EDB)	27.8	2.0	0.40	ug/l	25.0	ND	111	70-130	9	25	
Dibromomethane	30.8	2.0	0.36	ug/l	25.0	ND	123	65-135	11	25	
1,2-Dichlorobenzene	27.1	2.0	0.32	ug/l	25.0	ND	108	75-125	9	20	
1,3-Dichlorobenzene	27.5	2.0	0.35	ug/l	25.0	ND	110	75-125	8	20	
1,4-Dichlorobenzene	27.0	2.0	0.37	ug/l	25.0	ND	108	75-125	7	20	
Dichlorodifluoromethane	27.8	5.0	0.26	ug/l	25.0	ND	111	25-155	5	30	
1,1-Dichloroethane	29.5	2.0	0.40	ug/l	25.0	ND	118	65-130	5	20	
1,2-Dichloroethane	31.3	0.50	0.28	ug/l	25.0	ND	125	60-140	10	20	
1,1-Dichloroethene	33.1	5.0	0.42	ug/l	25.0	ND	132	60-130	5	20	*M1*
cis-1,2-Dichloroethene	30.2	2.0	0.32	ug/l	25.0	ND	121	65-130	9	20	
trans-1,2-Dichloroethene	30.4	2.0	0.30	ug/l	25.0	ND	121	65-130	5	20	
1,2-Dichloropropane	28.3	2.0	0.35	ug/l	25.0	ND	113	65-130	8	20	
1,3-Dichloropropane	29.4	2.0	0.32	ug/l	25.0	ND	118	65-135	10	25	
2,2-Dichloropropane	33.6	2.0	0.34	ug/l	25.0	ND	134	60-145	2	25	

TestAmerica Irvine

Joseph Doak
Project Manager

The results pertain only to the samples tested in the laboratory. This report shall not be reproduced, except in full, without written permission from TestAmerica.

TestAmerica
THE LEADER IN ENVIRONMENTAL TESTING

17461 Derian Avenue. Suite 100, Irvine, CA 92614 (949) 261-1022 Fax:(949) 260-3297

Applied Process Technology
3333 Vincent Road, Suite 222
Pleasant Hill, CA 94523
Attention: Keel Robinson

Project ID: Montrose-Torrance Bench Study
P1190
Report Number: ISH0701

Sampled: 08/07/09
Received: 08/08/09

METHOD BLANK/QC DATA

VOLATILE ORGANICS by GC/MS (EPA 5030B/8260B)

Analyte	Result	Reporting Limit	MDL	Units	Spike Level	Source Result	%REC	%REC Limits	RPD	RPD Limit	Data Qualifiers
Batch: 9H12034 Extracted: 08/12/09											
Matrix Spike Dup Analyzed: 08/12/2009 (9H12034-MSD1)						**Source: ISH0728-10**					
cis-1,3-Dichloropropene	28.4	2.0	0.22	ug/l	25.0	ND	114	70-130	12	20	
trans-1,3-Dichloropropene	28.5	2.0	0.32	ug/l	25.0	ND	114	65-135	11	25	
1,1-Dichloropropene	30.8	2.0	0.28	ug/l	25.0	ND	123	70-135	8	20	
Ethylbenzene	29.5	2.0	0.25	ug/l	25.0	ND	118	65-130	7	20	
Hexachlorobutadiene	26.4	5.0	0.38	ug/l	25.0	ND	105	60-135	7	20	
2-Hexanone	30.9	10	2.6	ug/l	25.0	ND	124	25-140	12	35	
Isopropylbenzene	28.5	2.0	0.25	ug/l	25.0	ND	114	70-135	6	20	
p-Isopropyltoluene	27.3	2.0	0.28	ug/l	25.0	ND	109	65-130	6	20	
4-Methyl-2-pentanone (MIBK)	30.8	10	3.5	ug/l	25.0	ND	123	40-140	11	35	
Methylene chloride	31.7	5.0	0.95	ug/l	25.0	ND	127	50-135	8	20	
Naphthalene	28.0	5.0	0.41	ug/l	25.0	ND	112	50-140	12	30	
n-Propylbenzene	28.6	2.0	0.27	ug/l	25.0	ND	114	70-135	5	20	
Styrene	27.7	2.0	0.20	ug/l	25.0	ND	111	50-145	8	30	
1,1,1,2-Tetrachloroethane	28.4	5.0	0.27	ug/l	25.0	ND	113	65-140	11	20	
1,1,2,2-Tetrachloroethane	28.9	1.0	0.30	ug/l	25.0	ND	116	55-135	10	30	
Tetrachloroethene	27.6	2.0	0.32	ug/l	25.0	ND	111	65-130	7	20	
Toluene	28.0	2.0	0.36	ug/l	25.0	ND	112	70-125	6	20	
1,2,3-Trichlorobenzene	27.1	5.0	0.30	ug/l	25.0	ND	109	60-135	10	20	
1,2,4-Trichlorobenzene	27.6	5.0	0.48	ug/l	25.0	ND	110	65-135	10	20	
1,1,1-Trichloroethane	32.8	2.0	0.30	ug/l	25.0	ND	131	65-140	4	20	
1,1,2-Trichloroethane	29.3	2.0	0.30	ug/l	25.0	ND	117	65-130	8	25	
Trichloroethene	27.8	2.0	0.26	ug/l	25.0	ND	111	65-125	8	20	
Trichlorofluoromethane	31.5	5.0	0.34	ug/l	25.0	ND	126	60-145	1	25	
1,2,3-Trichloropropane	28.2	10	0.40	ug/l	25.0	ND	113	55-135	12	30	
1,2,4-Trimethylbenzene	28.1	2.0	0.23	ug/l	25.0	ND	112	55-135	7	25	
1,3,5-Trimethylbenzene	27.9	2.0	0.26	ug/l	25.0	ND	112	70-130	6	20	
Vinyl acetate	34.3	5.0	1.0	ug/l	25.0	ND	137	40-150	9	30	
Vinyl chloride	33.4	0.50	0.40	ug/l	25.0	ND	134	45-140	10	30	
m,p-Xylenes	56.3	2.0	0.60	ug/l	50.0	ND	113	65-130	7	25	
o-Xylene	28.2	2.0	0.30	ug/l	25.0	ND	113	65-125	6	20	
Surrogate: 4-Bromofluorobenzene	*27.7*			*ug/l*	*25.0*		*111*	*80-120*			
Surrogate: Dibromofluoromethane	*27.0*			*ug/l*	*25.0*		*108*	*80-120*			
Surrogate: Toluene-d8	*25.8*			*ug/l*	*25.0*		*103*	*80-120*			

TestAmerica Irvine

Joseph Doak
Project Manager

The results pertain only to the samples tested in the laboratory. This report shall not be reproduced, except in full, without written permission from TestAmerica.

TestAmerica
THE LEADER IN ENVIRONMENTAL TESTING

17461 Derian Avenue. Suite 100, Irvine, CA 92614 (949) 261-1022 Fax:(949) 260-3297

Applied Process Technology
3333 Vincent Road, Suite 222
Pleasant Hill, CA 94523
Attention: Keel Robinson

Project ID: Montrose-Torrance Bench Study
P1190
Report Number: ISH0701

Sampled: 08/07/09
Received: 08/08/09

METHOD BLANK/QC DATA

VOLATILE ORGANICS by GC/MS (EPA 5030B/8260B)

Analyte	Result	Reporting Limit	MDL	Units	Spike Level	Source Result	%REC	%REC Limits	RPD	RPD Limit	Data Qualifiers
Batch: 9H12036 Extracted: 08/12/09											
Blank Analyzed: 08/12/2009 (9H12036-BLK1)											
Acetone	ND	10	4.5	ug/l							
Benzene	ND	2.0	0.28	ug/l							
Bromobenzene	ND	5.0	0.27	ug/l							
Bromochloromethane	ND	5.0	0.40	ug/l							
Bromodichloromethane	ND	2.0	0.30	ug/l							
Bromoform	ND	5.0	0.40	ug/l							
Bromomethane	ND	5.0	0.42	ug/l							
2-Butanone (MEK)	ND	10	4.7	ug/l							
n-Butylbenzene	ND	5.0	0.37	ug/l							
sec-Butylbenzene	ND	5.0	0.25	ug/l							
tert-Butylbenzene	ND	5.0	0.22	ug/l							
Carbon Disulfide	ND	1.0	0.48	ug/l							
Carbon tetrachloride	ND	0.50	0.28	ug/l							
Chloroethane	ND	5.0	0.40	ug/l							
Chloroform	ND	2.0	0.33	ug/l							
Chloromethane	ND	1.5	0.40	ug/l							
2-Chlorotoluene	ND	5.0	0.28	ug/l							
4-Chlorotoluene	ND	5.0	0.29	ug/l							
1,2-Dibromo-3-chloropropane	ND	5.0	0.97	ug/l							
Dibromochloromethane	ND	2.0	0.40	ug/l							
1,2-Dibromoethane (EDB)	ND	2.0	0.40	ug/l							
Dibromomethane	ND	2.0	0.36	ug/l							
1,2-Dichlorobenzene	ND	2.0	0.32	ug/l							
1,3-Dichlorobenzene	ND	2.0	0.35	ug/l							
1,4-Dichlorobenzene	ND	2.0	0.37	ug/l							
Dichlorodifluoromethane	ND	5.0	0.26	ug/l							
1,1-Dichloroethane	ND	2.0	0.40	ug/l							
1,2-Dichloroethane	ND	0.50	0.28	ug/l							
1,1-Dichloroethene	ND	5.0	0.42	ug/l							
cis-1,2-Dichloroethene	ND	2.0	0.32	ug/l							
trans-1,2-Dichloroethene	ND	2.0	0.30	ug/l							
1,2-Dichloropropane	ND	2.0	0.35	ug/l							
1,3-Dichloropropane	ND	2.0	0.32	ug/l							
2,2-Dichloropropane	ND	2.0	0.34	ug/l							
cis-1,3-Dichloropropene	ND	2.0	0.22	ug/l							

TestAmerica Irvine

Joseph Doak
Project Manager

The results pertain only to the samples tested in the laboratory. This report shall not be reproduced, except in full, without written permission from TestAmerica.

TestAmerica
THE LEADER IN ENVIRONMENTAL TESTING

17461 Derian Avenue. Suite 100, Irvine, CA 92614 (949) 261-1022 Fax:(949) 260-3297

Applied Process Technology
3333 Vincent Road, Suite 222
Pleasant Hill, CA 94523
Attention: Keel Robinson

Project ID: Montrose-Torrance Bench Study
P1190
Report Number: ISH0701

Sampled: 08/07/09
Received: 08/08/09

METHOD BLANK/QC DATA

VOLATILE ORGANICS by GC/MS (EPA 5030B/8260B)

Analyte	Result	Reporting Limit	MDL	Units	Spike Level	Source Result	%REC	%REC Limits	RPD	RPD Limit	Data Qualifiers
Batch: 9H12036 Extracted: 08/12/09											
Blank Analyzed: 08/12/2009 (9H12036-BLK1)											
trans-1,3-Dichloropropene	ND	2.0	0.32	ug/l							
1,1-Dichloropropene	ND	2.0	0.28	ug/l							
1,2-Dichloro-1,1,2-trifluoroethane	ND	2.0	1.1	ug/l							
Ethylbenzene	ND	2.0	0.25	ug/l							
Hexachlorobutadiene	ND	5.0	0.38	ug/l							
2-Hexanone	ND	10	2.6	ug/l							
Isopropylbenzene	ND	2.0	0.25	ug/l							
p-Isopropyltoluene	ND	2.0	0.28	ug/l							
4-Methyl-2-pentanone (MIBK)	ND	10	3.5	ug/l							
Methylene chloride	ND	5.0	0.95	ug/l							
Naphthalene	ND	5.0	0.41	ug/l							
n-Propylbenzene	ND	2.0	0.27	ug/l							
Styrene	ND	2.0	0.20	ug/l							
1,1,1,2-Tetrachloroethane	ND	5.0	0.27	ug/l							
1,1,2,2-Tetrachloroethane	ND	1.0	0.30	ug/l							
Tetrachloroethene	ND	2.0	0.32	ug/l							
Toluene	ND	2.0	0.36	ug/l							
1,2,3-Trichlorobenzene	ND	5.0	0.30	ug/l							
1,2,4-Trichlorobenzene	ND	5.0	0.48	ug/l							
1,1,1-Trichloroethane	ND	2.0	0.30	ug/l							
1,1,2-Trichloroethane	ND	2.0	0.30	ug/l							
Trichloroethene	ND	2.0	0.26	ug/l							
Trichlorofluoromethane	ND	5.0	0.34	ug/l							
1,2,3-Trichloropropane	ND	10	0.40	ug/l							
1,2,4-Trimethylbenzene	ND	2.0	0.23	ug/l							
1,3,5-Trimethylbenzene	ND	2.0	0.26	ug/l							
Vinyl acetate	ND	5.0	1.0	ug/l							
Vinyl chloride	ND	0.50	0.40	ug/l							
m,p-Xylenes	ND	2.0	0.60	ug/l							
o-Xylene	ND	2.0	0.30	ug/l							
Xylenes, Total	ND	2.0	0.90	ug/l							
Surrogate: 4-Bromofluorobenzene	*23.9*			*ug/l*	*25.0*		*96*	*80-120*			
Surrogate: Dibromofluoromethane	*25.6*			*ug/l*	*25.0*		*102*	*80-120*			
Surrogate: Toluene-d8	*27.1*			*ug/l*	*25.0*		*109*	*80-120*			

TestAmerica Irvine

Joseph Doak
Project Manager

The results pertain only to the samples tested in the laboratory. This report shall not be reproduced, except in full, without written permission from TestAmerica.

TestAmerica
THE LEADER IN ENVIRONMENTAL TESTING

17461 Derian Avenue. Suite 100, Irvine, CA 92614 (949) 261-1022 Fax:(949) 260-3297

Applied Process Technology
3333 Vincent Road, Suite 222
Pleasant Hill, CA 94523
Attention: Keel Robinson

Project ID: Montrose-Torrance Bench Study
P1190
Report Number: ISH0701

Sampled: 08/07/09
Received: 08/08/09

METHOD BLANK/QC DATA

VOLATILE ORGANICS by GC/MS (EPA 5030B/8260B)

Analyte	Result	Reporting Limit	MDL	Units	Spike Level	Source Result	%REC	%REC Limits	RPD	RPD Limit	Data Qualifiers
Batch: 9H12036 Extracted: 08/12/09											
LCS Analyzed: 08/12/2009 (9H12036-BS1)											
Acetone	21.3	10	4.5	ug/l	25.0		85	30-140			
Benzene	26.6	2.0	0.28	ug/l	25.0		106	70-120			
Bromobenzene	25.4	5.0	0.27	ug/l	25.0		101	75-120			
Bromochloromethane	27.0	5.0	0.40	ug/l	25.0		108	70-130			
Bromodichloromethane	27.7	2.0	0.30	ug/l	25.0		111	70-135			
Bromoform	20.4	5.0	0.40	ug/l	25.0		82	55-130			
Bromomethane	25.1	5.0	0.42	ug/l	25.0		100	65-140			
2-Butanone (MEK)	25.8	10	4.7	ug/l	25.0		103	40-140			
n-Butylbenzene	27.2	5.0	0.37	ug/l	25.0		109	70-130			
sec-Butylbenzene	27.2	5.0	0.25	ug/l	25.0		109	70-125			
tert-Butylbenzene	26.6	5.0	0.22	ug/l	25.0		106	70-125			
Carbon Disulfide	24.9	1.0	0.48	ug/l	25.0		100	50-130			
Carbon tetrachloride	28.1	0.50	0.28	ug/l	25.0		112	65-140			
Chloroethane	26.6	5.0	0.40	ug/l	25.0		106	60-140			
Chloroform	26.4	2.0	0.33	ug/l	25.0		106	70-130			
Chloromethane	20.2	1.5	0.40	ug/l	25.0		81	50-140			
2-Chlorotoluene	27.0	5.0	0.28	ug/l	25.0		108	70-125			
4-Chlorotoluene	27.5	5.0	0.29	ug/l	25.0		110	75-125			
1,2-Dibromo-3-chloropropane	25.6	5.0	0.97	ug/l	25.0		103	50-135			
Dibromochloromethane	27.0	2.0	0.40	ug/l	25.0		108	70-140			
1,2-Dibromoethane (EDB)	25.7	2.0	0.40	ug/l	25.0		103	75-125			
Dibromomethane	28.3	2.0	0.36	ug/l	25.0		113	70-125			
1,2-Dichlorobenzene	25.0	2.0	0.32	ug/l	25.0		100	75-120			
1,3-Dichlorobenzene	26.8	2.0	0.35	ug/l	25.0		107	75-120			
1,4-Dichlorobenzene	25.8	2.0	0.37	ug/l	25.0		103	75-120			
Dichlorodifluoromethane	25.0	5.0	0.26	ug/l	25.0		100	35-155			
1,1-Dichloroethane	26.1	2.0	0.40	ug/l	25.0		104	70-125			
1,2-Dichloroethane	25.4	0.50	0.28	ug/l	25.0		101	60-140			
1,1-Dichloroethene	29.0	5.0	0.42	ug/l	25.0		116	70-125			
cis-1,2-Dichloroethene	29.4	2.0	0.32	ug/l	25.0		118	70-125			
trans-1,2-Dichloroethene	27.9	2.0	0.30	ug/l	25.0		111	70-125			
1,2-Dichloropropane	25.6	2.0	0.35	ug/l	25.0		102	70-125			
1,3-Dichloropropane	27.3	2.0	0.32	ug/l	25.0		109	70-120			
2,2-Dichloropropane	26.9	2.0	0.34	ug/l	25.0		108	65-140			
cis-1,3-Dichloropropene	31.3	2.0	0.22	ug/l	25.0		125	75-125			

TestAmerica Irvine

Joseph Doak
Project Manager

The results pertain only to the samples tested in the laboratory. This report shall not be reproduced, except in full, without written permission from TestAmerica.

TestAmerica
THE LEADER IN ENVIRONMENTAL TESTING

17461 Derian Avenue. Suite 100, Irvine, CA 92614 (949) 261-1022 Fax:(949) 260-3297

Applied Process Technology
3333 Vincent Road, Suite 222
Pleasant Hill, CA 94523
Attention: Keel Robinson

Project ID: Montrose-Torrance Bench Study
P1190
Report Number: ISH0701

Sampled: 08/07/09
Received: 08/08/09

METHOD BLANK/QC DATA

VOLATILE ORGANICS by GC/MS (EPA 5030B/8260B)

Analyte	Result	Reporting Limit	MDL	Units	Spike Level	Source Result	%REC	%REC Limits	RPD	RPD Limit	Data Qualifiers
Batch: 9H12036 Extracted: 08/12/09											
LCS Analyzed: 08/12/2009 (9H12036-BS1)											
trans-1,3-Dichloropropene	24.1	2.0	0.32	ug/l	25.0		96	70-125			
1,1-Dichloropropene	27.6	2.0	0.28	ug/l	25.0		110	75-130			
Ethylbenzene	27.2	2.0	0.25	ug/l	25.0		109	75-125			
Hexachlorobutadiene	23.8	5.0	0.38	ug/l	25.0		95	65-135			
2-Hexanone	23.0	10	2.6	ug/l	25.0		92	45-140			
Isopropylbenzene	25.9	2.0	0.25	ug/l	25.0		104	75-130			
p-Isopropyltoluene	26.6	2.0	0.28	ug/l	25.0		107	75-125			
4-Methyl-2-pentanone (MIBK)	23.2	10	3.5	ug/l	25.0		93	45-140			
Methylene chloride	30.0	5.0	0.95	ug/l	25.0		120	55-130			
Naphthalene	26.2	5.0	0.41	ug/l	25.0		105	55-135			
n-Propylbenzene	26.9	2.0	0.27	ug/l	25.0		108	75-130			
Styrene	26.6	2.0	0.20	ug/l	25.0		106	75-130			
1,1,1,2-Tetrachloroethane	25.6	5.0	0.27	ug/l	25.0		102	70-130			
1,1,2,2-Tetrachloroethane	28.1	1.0	0.30	ug/l	25.0		112	55-130			
Tetrachloroethene	25.3	2.0	0.32	ug/l	25.0		101	70-125			
Toluene	28.0	2.0	0.36	ug/l	25.0		112	70-120			
1,2,3-Trichlorobenzene	24.6	5.0	0.30	ug/l	25.0		98	65-125			
1,2,4-Trichlorobenzene	26.0	5.0	0.48	ug/l	25.0		104	70-135			
1,1,1-Trichloroethane	26.3	2.0	0.30	ug/l	25.0		105	65-135			
1,1,2-Trichloroethane	27.0	2.0	0.30	ug/l	25.0		108	70-125			
Trichloroethene	25.7	2.0	0.26	ug/l	25.0		103	70-125			
Trichlorofluoromethane	26.2	5.0	0.34	ug/l	25.0		105	65-145			
1,2,3-Trichloropropane	26.5	10	0.40	ug/l	25.0		106	60-130			
1,2,4-Trimethylbenzene	27.1	2.0	0.23	ug/l	25.0		108	75-125			
1,3,5-Trimethylbenzene	26.7	2.0	0.26	ug/l	25.0		107	75-125			
Vinyl acetate	25.8	5.0	1.0	ug/l	25.0		103	45-145			
Vinyl chloride	22.5	0.50	0.40	ug/l	25.0		90	55-135			
m,p-Xylenes	54.5	2.0	0.60	ug/l	50.0		109	75-125			
o-Xylene	27.5	2.0	0.30	ug/l	25.0		110	75-125			
Surrogate: 4-Bromofluorobenzene	*25.7*			*ug/l*	*25.0*		*103*	*80-120*			
Surrogate: Dibromofluoromethane	*26.6*			*ug/l*	*25.0*		*106*	*80-120*			
Surrogate: Toluene-d8	*27.1*			*ug/l*	*25.0*		*109*	*80-120*			

TestAmerica Irvine

Joseph Doak
Project Manager

The results pertain only to the samples tested in the laboratory. This report shall not be reproduced, except in full, without written permission from TestAmerica.

TestAmerica
THE LEADER IN ENVIRONMENTAL TESTING

17461 Derian Avenue. Suite 100, Irvine, CA 92614 (949) 261-1022 Fax:(949) 260-3297

Applied Process Technology
3333 Vincent Road, Suite 222
Pleasant Hill, CA 94523
Attention: Keel Robinson

Project ID: Montrose-Torrance Bench Study
P1190
Report Number: ISH0701

Sampled: 08/07/09
Received: 08/08/09

METHOD BLANK/QC DATA

VOLATILE ORGANICS by GC/MS (EPA 5030B/8260B)

Analyte	Result	Reporting Limit	MDL	Units	Spike Level	Source Result	%REC	%REC Limits	RPD	RPD Limit	Data Qualifiers
Batch: 9H12036 Extracted: 08/12/09											
Matrix Spike Analyzed: 08/12/2009 (9H12036-MS1)					**Source: ISH0911-03**						
Acetone	23.2	10	4.5	ug/l	25.0	ND	93	20-150			
Benzene	30.0	2.0	0.28	ug/l	25.0	ND	120	65-125			
Bromobenzene	29.0	5.0	0.27	ug/l	25.0	ND	116	70-125			
Bromochloromethane	29.1	5.0	0.40	ug/l	25.0	ND	116	65-135			
Bromodichloromethane	32.5	2.0	0.30	ug/l	25.0	ND	130	70-135			
Bromoform	22.0	5.0	0.40	ug/l	25.0	ND	88	55-135			
Bromomethane	26.4	5.0	0.42	ug/l	25.0	ND	106	55-145			
2-Butanone (MEK)	29.0	10	4.7	ug/l	25.0	ND	116	30-145			
n-Butylbenzene	30.4	5.0	0.37	ug/l	25.0	ND	122	65-135			
sec-Butylbenzene	31.7	5.0	0.25	ug/l	25.0	ND	127	70-125			*M1*
tert-Butylbenzene	30.0	5.0	0.22	ug/l	25.0	ND	120	65-130			
Carbon Disulfide	28.2	1.0	0.48	ug/l	25.0	ND	113	40-140			
Carbon tetrachloride	32.0	0.50	0.28	ug/l	25.0	ND	128	65-140			
Chloroethane	30.2	5.0	0.40	ug/l	25.0	ND	121	55-140			
Chloroform	29.7	2.0	0.33	ug/l	25.0	ND	119	65-135			
Chloromethane	21.5	1.5	0.40	ug/l	25.0	ND	86	45-145			
2-Chlorotoluene	29.8	5.0	0.28	ug/l	25.0	ND	119	65-135			
4-Chlorotoluene	30.1	5.0	0.29	ug/l	25.0	ND	120	70-135			
1,2-Dibromo-3-chloropropane	27.7	5.0	0.97	ug/l	25.0	ND	111	45-145			
Dibromochloromethane	30.4	2.0	0.40	ug/l	25.0	ND	121	65-140			
1,2-Dibromoethane (EDB)	28.4	2.0	0.40	ug/l	25.0	ND	114	70-130			
Dibromomethane	32.5	2.0	0.36	ug/l	25.0	ND	130	65-135			
1,2-Dichlorobenzene	27.9	2.0	0.32	ug/l	25.0	ND	112	75-125			
1,3-Dichlorobenzene	30.2	2.0	0.35	ug/l	25.0	ND	121	75-125			
1,4-Dichlorobenzene	28.4	2.0	0.37	ug/l	25.0	ND	114	75-125			
Dichlorodifluoromethane	27.1	5.0	0.26	ug/l	25.0	ND	109	25-155			
1,1-Dichloroethane	28.4	2.0	0.40	ug/l	25.0	ND	113	65-130			
1,2-Dichloroethane	28.5	0.50	0.28	ug/l	25.0	ND	114	60-140			
1,1-Dichloroethene	32.3	5.0	0.42	ug/l	25.0	ND	129	60-130			
cis-1,2-Dichloroethene	32.5	2.0	0.32	ug/l	25.0	0.430	128	65-130			
trans-1,2-Dichloroethene	30.6	2.0	0.30	ug/l	25.0	ND	122	65-130			
1,2-Dichloropropane	29.5	2.0	0.35	ug/l	25.0	ND	118	65-130			
1,3-Dichloropropane	31.4	2.0	0.32	ug/l	25.0	ND	126	65-135			
2,2-Dichloropropane	31.4	2.0	0.34	ug/l	25.0	ND	126	60-145			
cis-1,3-Dichloropropene	35.5	2.0	0.22	ug/l	25.0	ND	142	70-130			*M1*

TestAmerica Irvine

Joseph Doak
Project Manager

The results pertain only to the samples tested in the laboratory. This report shall not be reproduced, except in full, without written permission from TestAmerica.

TestAmerica
THE LEADER IN ENVIRONMENTAL TESTING

17461 Derian Avenue. Suite 100, Irvine, CA 92614 (949) 261-1022 Fax:(949) 260-3297

Applied Process Technology
3333 Vincent Road, Suite 222
Pleasant Hill, CA 94523
Attention: Keel Robinson

Project ID: Montrose-Torrance Bench Study
P1190
Report Number: ISH0701

Sampled: 08/07/09
Received: 08/08/09

METHOD BLANK/QC DATA

VOLATILE ORGANICS by GC/MS (EPA 5030B/8260B)

Analyte	Result	Reporting Limit	MDL	Units	Spike Level	Source Result	%REC	%REC Limits	RPD	RPD Limit	Data Qualifiers
Batch: 9H12036 Extracted: 08/12/09											
Matrix Spike Analyzed: 08/12/2009 (9H12036-MS1)						**Source: ISH0911-03**					
trans-1,3-Dichloropropene	27.4	2.0	0.32	ug/l	25.0	ND	110	65-135			
1,1-Dichloropropene	31.5	2.0	0.28	ug/l	25.0	ND	126	70-135			
Ethylbenzene	29.6	2.0	0.25	ug/l	25.0	ND	118	65-130			
Hexachlorobutadiene	26.1	5.0	0.38	ug/l	25.0	ND	104	60-135			
2-Hexanone	25.8	10	2.6	ug/l	25.0	ND	103	25-140			
Isopropylbenzene	28.0	2.0	0.25	ug/l	25.0	ND	112	70-135			
p-Isopropyltoluene	29.4	2.0	0.28	ug/l	25.0	ND	117	65-130			
4-Methyl-2-pentanone (MIBK)	26.1	10	3.5	ug/l	25.0	ND	104	40-140			
Methylene chloride	33.0	5.0	0.95	ug/l	25.0	ND	132	50-135			
Naphthalene	29.5	5.0	0.41	ug/l	25.0	ND	118	50-140			
n-Propylbenzene	30.7	2.0	0.27	ug/l	25.0	ND	123	70-135			
Styrene	30.0	2.0	0.20	ug/l	25.0	ND	120	50-145			
1,1,1,2-Tetrachloroethane	28.6	5.0	0.27	ug/l	25.0	ND	114	65-140			
1,1,2,2-Tetrachloroethane	31.6	1.0	0.30	ug/l	25.0	ND	126	55-135			
Tetrachloroethene	28.4	2.0	0.32	ug/l	25.0	0.340	112	65-130			
Toluene	31.9	2.0	0.36	ug/l	25.0	ND	128	70-125			*M1*
1,2,3-Trichlorobenzene	28.2	5.0	0.30	ug/l	25.0	ND	113	60-135			
1,2,4-Trichlorobenzene	28.6	5.0	0.48	ug/l	25.0	ND	114	65-135			
1,1,1-Trichloroethane	29.2	2.0	0.30	ug/l	25.0	ND	117	65-140			
1,1,2-Trichloroethane	31.8	2.0	0.30	ug/l	25.0	ND	127	65-130			
Trichloroethene	31.3	2.0	0.26	ug/l	25.0	0.930	121	65-125			
Trichlorofluoromethane	29.1	5.0	0.34	ug/l	25.0	ND	116	60-145			
1,2,3-Trichloropropane	28.9	10	0.40	ug/l	25.0	ND	116	55-135			
1,2,4-Trimethylbenzene	29.4	2.0	0.23	ug/l	25.0	ND	118	55-135			
1,3,5-Trimethylbenzene	28.2	2.0	0.26	ug/l	25.0	ND	113	70-130			
Vinyl acetate	27.2	5.0	1.0	ug/l	25.0	ND	109	40-150			
Vinyl chloride	25.1	0.50	0.40	ug/l	25.0	ND	100	45-140			
m,p-Xylenes	59.4	2.0	0.60	ug/l	50.0	ND	119	65-130			
o-Xylene	30.7	2.0	0.30	ug/l	25.0	ND	123	65-125			
Surrogate: 4-Bromofluorobenzene	*25.5*			*ug/l*	*25.0*		*102*	*80-120*			
Surrogate: Dibromofluoromethane	*26.5*			*ug/l*	*25.0*		*106*	*80-120*			
Surrogate: Toluene-d8	*28.2*			*ug/l*	*25.0*		*113*	*80-120*			

TestAmerica Irvine

Joseph Doak
Project Manager

The results pertain only to the samples tested in the laboratory. This report shall not be reproduced, except in full, without written permission from TestAmerica.

TestAmerica
THE LEADER IN ENVIRONMENTAL TESTING

17461 Derian Avenue. Suite 100, Irvine, CA 92614 (949) 261-1022 Fax:(949) 260-3297

Applied Process Technology
3333 Vincent Road, Suite 222
Pleasant Hill, CA 94523
Attention: Keel Robinson

Project ID: Montrose-Torrance Bench Study
P1190
Report Number: ISH0701

Sampled: 08/07/09
Received: 08/08/09

METHOD BLANK/QC DATA

VOLATILE ORGANICS by GC/MS (EPA 5030B/8260B)

Analyte	Result	Reporting Limit	MDL	Units	Spike Level	Source Result	%REC	%REC Limits	RPD	RPD Limit	Data Qualifiers
Batch: 9H12036 Extracted: 08/12/09											
Matrix Spike Dup Analyzed: 08/12/2009 (9H12036-MSD1)						**Source: ISH0911-03**					
Acetone	25.0	10	4.5	ug/l	25.0	ND	100	20-150	8	35	
Benzene	30.0	2.0	0.28	ug/l	25.0	ND	120	65-125	0	20	
Bromobenzene	31.2	5.0	0.27	ug/l	25.0	ND	125	70-125	7	20	
Bromochloromethane	31.8	5.0	0.40	ug/l	25.0	ND	127	65-135	9	25	
Bromodichloromethane	33.7	2.0	0.30	ug/l	25.0	ND	135	70-135	4	20	
Bromoform	25.0	5.0	0.40	ug/l	25.0	ND	100	55-135	13	25	
Bromomethane	28.7	5.0	0.42	ug/l	25.0	ND	115	55-145	8	25	
2-Butanone (MEK)	31.6	10	4.7	ug/l	25.0	ND	126	30-145	9	40	
n-Butylbenzene	32.8	5.0	0.37	ug/l	25.0	ND	131	65-135	7	20	
sec-Butylbenzene	32.9	5.0	0.25	ug/l	25.0	ND	132	70-125	4	20	*M1*
tert-Butylbenzene	33.8	5.0	0.22	ug/l	25.0	ND	135	65-130	12	20	*M1*
Carbon Disulfide	30.1	1.0	0.48	ug/l	25.0	ND	120	40-140	7	20	
Carbon tetrachloride	33.6	0.50	0.28	ug/l	25.0	ND	135	65-140	5	25	
Chloroethane	30.4	5.0	0.40	ug/l	25.0	ND	122	55-140	1	25	
Chloroform	31.0	2.0	0.33	ug/l	25.0	ND	124	65-135	4	20	
Chloromethane	23.3	1.5	0.40	ug/l	25.0	ND	93	45-145	8	25	
2-Chlorotoluene	32.3	5.0	0.28	ug/l	25.0	ND	129	65-135	8	20	
4-Chlorotoluene	33.9	5.0	0.29	ug/l	25.0	ND	136	70-135	12	20	*M1*
1,2-Dibromo-3-chloropropane	29.8	5.0	0.97	ug/l	25.0	ND	119	45-145	7	30	
Dibromochloromethane	33.3	2.0	0.40	ug/l	25.0	ND	133	65-140	9	25	
1,2-Dibromoethane (EDB)	30.8	2.0	0.40	ug/l	25.0	ND	123	70-130	8	25	
Dibromomethane	34.2	2.0	0.36	ug/l	25.0	ND	137	65-135	5	25	*M1*
1,2-Dichlorobenzene	30.4	2.0	0.32	ug/l	25.0	ND	122	75-125	9	20	
1,3-Dichlorobenzene	31.5	2.0	0.35	ug/l	25.0	ND	126	75-125	4	20	*M1*
1,4-Dichlorobenzene	32.0	2.0	0.37	ug/l	25.0	ND	128	75-125	12	20	*M1*
Dichlorodifluoromethane	28.1	5.0	0.26	ug/l	25.0	ND	112	25-155	3	30	
1,1-Dichloroethane	30.6	2.0	0.40	ug/l	25.0	ND	123	65-130	8	20	
1,2-Dichloroethane	30.0	0.50	0.28	ug/l	25.0	ND	120	60-140	5	20	
1,1-Dichloroethene	33.4	5.0	0.42	ug/l	25.0	ND	133	60-130	3	20	*M1*
cis-1,2-Dichloroethene	34.6	2.0	0.32	ug/l	25.0	0.430	137	65-130	6	20	*M1*
trans-1,2-Dichloroethene	32.8	2.0	0.30	ug/l	25.0	ND	131	65-130	7	20	*M1*
1,2-Dichloropropane	29.9	2.0	0.35	ug/l	25.0	ND	120	65-130	1	20	
1,3-Dichloropropane	32.7	2.0	0.32	ug/l	25.0	ND	131	65-135	4	25	
2,2-Dichloropropane	33.7	2.0	0.34	ug/l	25.0	ND	135	60-145	7	25	
cis-1,3-Dichloropropene	37.9	2.0	0.22	ug/l	25.0	ND	151	70-130	6	20	*M1*

TestAmerica Irvine

Joseph Doak
Project Manager

The results pertain only to the samples tested in the laboratory. This report shall not be reproduced, except in full, without written permission from TestAmerica.

TestAmerica
THE LEADER IN ENVIRONMENTAL TESTING

17461 Derian Avenue. Suite 100, Irvine, CA 92614 (949) 261-1022 Fax:(949) 260-3297

Applied Process Technology
3333 Vincent Road, Suite 222
Pleasant Hill, CA 94523
Attention: Keel Robinson

Project ID: Montrose-Torrance Bench Study
P1190
Report Number: ISH0701

Sampled: 08/07/09
Received: 08/08/09

METHOD BLANK/QC DATA

VOLATILE ORGANICS by GC/MS (EPA 5030B/8260B)

Analyte	Result	Reporting Limit	MDL	Units	Spike Level	Source Result	%REC	%REC Limits	RPD	RPD Limit	Data Qualifiers
Batch: 9H12036 Extracted: 08/12/09											
Matrix Spike Dup Analyzed: 08/12/2009 (9H12036-MSD1)						**Source: ISH0911-03**					
trans-1,3-Dichloropropene	28.9	2.0	0.32	ug/l	25.0	ND	116	65-135	5	25	
1,1-Dichloropropene	31.9	2.0	0.28	ug/l	25.0	ND	128	70-135	1	20	
Ethylbenzene	32.7	2.0	0.25	ug/l	25.0	ND	131	65-130	10	20	*M1*
Hexachlorobutadiene	28.4	5.0	0.38	ug/l	25.0	ND	113	60-135	8	20	
2-Hexanone	27.1	10	2.6	ug/l	25.0	ND	108	25-140	5	35	
Isopropylbenzene	31.6	2.0	0.25	ug/l	25.0	ND	126	70-135	12	20	
p-Isopropyltoluene	30.9	2.0	0.28	ug/l	25.0	ND	123	65-130	5	20	
4-Methyl-2-pentanone (MIBK)	26.2	10	3.5	ug/l	25.0	ND	105	40-140	1	35	
Methylene chloride	34.3	5.0	0.95	ug/l	25.0	ND	137	50-135	4	20	*M1*
Naphthalene	31.4	5.0	0.41	ug/l	25.0	ND	126	50-140	6	30	
n-Propylbenzene	33.0	2.0	0.27	ug/l	25.0	ND	132	70-135	7	20	
Styrene	33.3	2.0	0.20	ug/l	25.0	ND	133	50-145	10	30	
1,1,1,2-Tetrachloroethane	31.6	5.0	0.27	ug/l	25.0	ND	127	65-140	10	20	
1,1,2,2-Tetrachloroethane	32.4	1.0	0.30	ug/l	25.0	ND	130	55-135	3	30	
Tetrachloroethene	30.9	2.0	0.32	ug/l	25.0	0.340	122	65-130	8	20	
Toluene	32.2	2.0	0.36	ug/l	25.0	ND	129	70-125	1	20	*M1*
1,2,3-Trichlorobenzene	30.0	5.0	0.30	ug/l	25.0	ND	120	60-135	6	20	
1,2,4-Trichlorobenzene	31.2	5.0	0.48	ug/l	25.0	ND	125	65-135	9	20	
1,1,1-Trichloroethane	30.9	2.0	0.30	ug/l	25.0	ND	124	65-140	6	20	
1,1,2-Trichloroethane	33.1	2.0	0.30	ug/l	25.0	ND	132	65-130	4	25	*M1*
Trichloroethene	30.6	2.0	0.26	ug/l	25.0	0.930	119	65-125	2	20	
Trichlorofluoromethane	30.1	5.0	0.34	ug/l	25.0	ND	121	60-145	4	25	
1,2,3-Trichloropropane	30.9	10	0.40	ug/l	25.0	ND	124	55-135	7	30	
1,2,4-Trimethylbenzene	32.2	2.0	0.23	ug/l	25.0	ND	129	55-135	9	25	
1,3,5-Trimethylbenzene	31.3	2.0	0.26	ug/l	25.0	ND	125	70-130	11	20	
Vinyl acetate	28.8	5.0	1.0	ug/l	25.0	ND	115	40-150	6	30	
Vinyl chloride	27.1	0.50	0.40	ug/l	25.0	ND	108	45-140	8	30	
m,p-Xylenes	65.5	2.0	0.60	ug/l	50.0	ND	131	65-130	10	25	*M1*
o-Xylene	32.4	2.0	0.30	ug/l	25.0	ND	130	65-125	5	20	*M1*
Surrogate: 4-Bromofluorobenzene	*25.8*			*ug/l*	*25.0*		*103*	*80-120*			
Surrogate: Dibromofluoromethane	*25.7*			*ug/l*	*25.0*		*103*	*80-120*			
Surrogate: Toluene-d8	*26.4*			*ug/l*	*25.0*		*106*	*80-120*			

TestAmerica Irvine

Joseph Doak
Project Manager

The results pertain only to the samples tested in the laboratory. This report shall not be reproduced, except in full, without written permission from TestAmerica.

TestAmerica
THE LEADER IN ENVIRONMENTAL TESTING

17461 Derian Avenue. Suite 100, Irvine, CA 92614 (949) 261-1022 Fax:(949) 260-3297

Applied Process Technology
3333 Vincent Road, Suite 222
Pleasant Hill, CA 94523
Attention: Keel Robinson

Project ID: Montrose-Torrance Bench Study
P1190
Report Number: ISH0701

Sampled: 08/07/09
Received: 08/08/09

METHOD BLANK/QC DATA

VOLATILE ORGANICS by GC/MS (EPA 5030B/8260B)

Analyte	Result	Reporting Limit	MDL	Units	Spike Level	Source Result	%REC	%REC Limits	RPD	RPD Limit	Data Qualifiers
Batch: 9H14051 Extracted: 08/14/09											
Blank Analyzed: 08/14/2009 (9H14051-BLK1)											
Acetone	ND	10	4.5	ug/l							
Surrogate: 4-Bromofluorobenzene	*25.4*			*ug/l*	*25.0*		*102*	*80-120*			
Surrogate: Dibromofluoromethane	*23.4*			*ug/l*	*25.0*		*94*	*80-120*			
Surrogate: Toluene-d8	*26.6*			*ug/l*	*25.0*		*106*	*80-120*			
LCS Analyzed: 08/14/2009 (9H14051-BS1)											
Acetone	21.1	10	4.5	ug/l	25.0		84	30-140			
Surrogate: 4-Bromofluorobenzene	*25.6*			*ug/l*	*25.0*		*103*	*80-120*			
Surrogate: Dibromofluoromethane	*24.1*			*ug/l*	*25.0*		*96*	*80-120*			
Surrogate: Toluene-d8	*25.7*			*ug/l*	*25.0*		*103*	*80-120*			
Matrix Spike Analyzed: 08/14/2009 (9H14051-MS1)						**Source: ISH0974-03**					
Acetone	17.7	10	4.5	ug/l	25.0	ND	71	20-150			
Surrogate: 4-Bromofluorobenzene	*27.6*			*ug/l*	*25.0*		*110*	*80-120*			
Surrogate: Dibromofluoromethane	*23.1*			*ug/l*	*25.0*		*92*	*80-120*			
Surrogate: Toluene-d8	*26.3*			*ug/l*	*25.0*		*105*	*80-120*			
Matrix Spike Dup Analyzed: 08/14/2009 (9H14051-MSD1)						**Source: ISH0974-03**					
Acetone	18.2	10	4.5	ug/l	25.0	ND	73	20-150	3	35	
Surrogate: 4-Bromofluorobenzene	*25.4*			*ug/l*	*25.0*		*102*	*80-120*			
Surrogate: Dibromofluoromethane	*22.7*			*ug/l*	*25.0*		*91*	*80-120*			
Surrogate: Toluene-d8	*27.5*			*ug/l*	*25.0*		*110*	*80-120*			
Batch: 9H15008 Extracted: 08/15/09											
Blank Analyzed: 08/15/2009 (9H15008-BLK1)											
Acetone	ND	10	4.5	ug/l							
Surrogate: 4-Bromofluorobenzene	*25.5*			*ug/l*	*25.0*		*102*	*80-120*			
Surrogate: Dibromofluoromethane	*23.6*			*ug/l*	*25.0*		*94*	*80-120*			
Surrogate: Toluene-d8	*26.5*			*ug/l*	*25.0*		*106*	*80-120*			

TestAmerica Irvine

Joseph Doak
Project Manager

The results pertain only to the samples tested in the laboratory. This report shall not be reproduced, except in full, without written permission from TestAmerica.

TestAmerica
THE LEADER IN ENVIRONMENTAL TESTING

17461 Derian Avenue. Suite 100, Irvine, CA 92614 (949) 261-1022 Fax:(949) 260-3297

Applied Process Technology
3333 Vincent Road, Suite 222
Pleasant Hill, CA 94523
Attention: Keel Robinson

Project ID: Montrose-Torrance Bench Study
P1190
Report Number: ISH0701

Sampled: 08/07/09
Received: 08/08/09

METHOD BLANK/QC DATA

VOLATILE ORGANICS by GC/MS (EPA 5030B/8260B)

Analyte	Result	Reporting Limit	MDL	Units	Spike Level	Source Result	%REC	%REC Limits	RPD	RPD Limit	Data Qualifiers
Batch: 9H15008 Extracted: 08/15/09											
LCS Analyzed: 08/15/2009 (9H15008-BS1)											
Acetone	19.0	10	4.5	ug/l	25.0		76	30-140			
Surrogate: 4-Bromofluorobenzene	*25.1*			*ug/l*	*25.0*		*100*	*80-120*			
Surrogate: Dibromofluoromethane	*23.8*			*ug/l*	*25.0*		*95*	*80-120*			
Surrogate: Toluene-d8	*26.6*			*ug/l*	*25.0*		*107*	*80-120*			
LCS Dup Analyzed: 08/15/2009 (9H15008-BSD1)											
Acetone	19.6	10	4.5	ug/l	25.0		78	30-140	3	30	
Surrogate: 4-Bromofluorobenzene	*26.9*			*ug/l*	*25.0*		*108*	*80-120*			
Surrogate: Dibromofluoromethane	*23.9*			*ug/l*	*25.0*		*96*	*80-120*			
Surrogate: Toluene-d8	*26.4*			*ug/l*	*25.0*		*106*	*80-120*			
Matrix Spike Analyzed: 08/15/2009 (9H15008-MS1)						**Source: ISH1208-03**					
Acetone	22.9	10	4.5	ug/l	25.0	ND	92	20-150			
Surrogate: 4-Bromofluorobenzene	*25.6*			*ug/l*	*25.0*		*102*	*80-120*			
Surrogate: Dibromofluoromethane	*23.0*			*ug/l*	*25.0*		*92*	*80-120*			
Surrogate: Toluene-d8	*26.2*			*ug/l*	*25.0*		*105*	*80-120*			
Matrix Spike Dup Analyzed: 08/15/2009 (9H15008-MSD1)						**Source: ISH1208-03**					
Acetone	24.4	10	4.5	ug/l	25.0	ND	98	20-150	6	35	
Surrogate: 4-Bromofluorobenzene	*25.8*			*ug/l*	*25.0*		*103*	*80-120*			
Surrogate: Dibromofluoromethane	*22.7*			*ug/l*	*25.0*		*91*	*80-120*			
Surrogate: Toluene-d8	*27.4*			*ug/l*	*25.0*		*110*	*80-120*			

TestAmerica Irvine

Joseph Doak
Project Manager

The results pertain only to the samples tested in the laboratory. This report shall not be reproduced, except in full, without written permission from TestAmerica.

TestAmerica
THE LEADER IN ENVIRONMENTAL TESTING

17461 Derian Avenue. Suite 100, Irvine, CA 92614 (949) 261-1022 Fax:(949) 260-3297

Applied Process Technology
3333 Vincent Road, Suite 222
Pleasant Hill, CA 94523
Attention: Keel Robinson

Project ID: Montrose-Torrance Bench Study
P1190
Report Number: ISH0701

Sampled: 08/07/09
Received: 08/08/09

METHOD BLANK/QC DATA

DISSOLVED METALS

Analyte	Result	Reporting Limit	MDL	Units	Spike Level	Source Result	%REC	%REC Limits	RPD	RPD Limit	Data Qualifiers
Batch: 9H10101 Extracted: 08/10/09											
Blank Analyzed: 08/11/2009 (9H10101-BLK1)											
Calcium	ND	0.10	N/A	mg/l							
Iron	ND	0.040	N/A	mg/l							
Magnesium	ND	0.020	N/A	mg/l							
Manganese	ND	0.020	N/A	mg/l							
LCS Analyzed: 08/11/2009 (9H10101-BS1)											
Calcium	0.984	0.10	N/A	mg/l	1.00		98	80-120			
Iron	0.983	0.040	N/A	mg/l	1.00		98	80-120			
Magnesium	1.00	0.020	N/A	mg/l	1.00		100	80-120			
Manganese	0.985	0.020	N/A	mg/l	1.00		99	80-120			
Matrix Spike Analyzed: 08/11/2009 (9H10101-MS1)						**Source: ISH0576-01**					
Calcium	307	0.10	N/A	mg/l	1.00	313	-634	75-125			*MHA*
Iron	0.928	0.040	N/A	mg/l	1.00	ND	93	75-125			
Magnesium	104	0.020	N/A	mg/l	1.00	109	-501	75-125			*MHA*
Manganese	1.44	0.020	N/A	mg/l	1.00	0.544	90	75-125			
Matrix Spike Dup Analyzed: 08/11/2009 (9H10101-MSD1)						**Source: ISH0576-01**					
Calcium	309	0.10	N/A	mg/l	1.00	313	-348	75-125	1	20	*MHA*
Iron	0.973	0.040	N/A	mg/l	1.00	ND	97	75-125	5	20	
Magnesium	110	0.020	N/A	mg/l	1.00	109	119	75-125	6	20	*MHA*
Manganese	1.51	0.020	N/A	mg/l	1.00	0.544	96	75-125	5	20	

TestAmerica Irvine

Joseph Doak
Project Manager

The results pertain only to the samples tested in the laboratory. This report shall not be reproduced, except in full, without written permission from TestAmerica.

TestAmerica
THE LEADER IN ENVIRONMENTAL TESTING
17461 Derian Avenue. Suite 100, Irvine, CA 92614 (949) 261-1022 Fax:(949) 260-3297

Applied Process Technology
3333 Vincent Road, Suite 222
Pleasant Hill, CA 94523
Attention: Keel Robinson

Project ID: Montrose-Torrance Bench Study
P1190
Report Number: ISH0701

Sampled: 08/07/09
Received: 08/08/09

METHOD BLANK/QC DATA

INORGANICS

Analyte	Result	Reporting Limit	MDL	Units	Spike Level	Source Result	%REC	%REC Limits	RPD	RPD Limit	Data Qualifiers
Batch: 9H10001 Extracted: 08/10/09											
Blank Analyzed: 08/10/2009 (9H10001-BLK1)											
Total Organic Carbon	ND	1.0	N/A	mg/l							
LCS Analyzed: 08/10/2009 (9H10001-BS1)											
Total Organic Carbon	10.4	1.0	N/A	mg/l	10.0		104	90-110			
Matrix Spike Analyzed: 08/10/2009 (9H10001-MS1)						**Source: ISH0577-01**					
Total Organic Carbon	5.37	1.0	N/A	mg/l	5.00	ND	107	80-120			
Matrix Spike Dup Analyzed: 08/10/2009 (9H10001-MSD1)						**Source: ISH0577-01**					
Total Organic Carbon	5.26	1.0	N/A	mg/l	5.00	ND	105	80-120	2	20	
Batch: 9H10045 Extracted: 08/10/09											
Blank Analyzed: 08/10/2009 (9H10045-BLK1)											
Sulfate	ND	0.50	N/A	mg/l							
LCS Analyzed: 08/10/2009 (9H10045-BS1)											
Sulfate	9.62	0.50	N/A	mg/l	10.0		96	90-110			
Matrix Spike Analyzed: 08/10/2009 (9H10045-MS1)						**Source: ISH0705-01**					
Sulfate	1410	25	N/A	mg/l	100	1380	32	80-120			*MHA*
Matrix Spike Dup Analyzed: 08/10/2009 (9H10045-MSD1)						**Source: ISH0705-01**					
Sulfate	1470	25	N/A	mg/l	100	1380	88	80-120	4	20	*MHA*
Batch: 9H10057 Extracted: 08/10/09											
Blank Analyzed: 08/10/2009 (9H10057-BLK1)											
Alkalinity as CaCO3	ND	2.0	N/A	mg/l							
Bicarbonate	ND	2.4	N/A	mg/l							
Carbonate	ND	1.2	N/A	mg/l							
Hydroxide	ND	0.70	N/A	mg/l							

TestAmerica Irvine

Joseph Doak
Project Manager

The results pertain only to the samples tested in the laboratory. This report shall not be reproduced, except in full, without written permission from TestAmerica.

TestAmerica
THE LEADER IN ENVIRONMENTAL TESTING

17461 Derian Avenue. Suite 100, Irvine, CA 92614 (949) 261-1022 Fax:(949) 260-3297

Applied Process Technology
3333 Vincent Road, Suite 222
Pleasant Hill, CA 94523
Attention: Keel Robinson

Project ID: Montrose-Torrance Bench Study
P1190
Report Number: ISH0701

Sampled: 08/07/09
Received: 08/08/09

METHOD BLANK/QC DATA

INORGANICS

Analyte	Result	Reporting Limit	MDL	Units	Spike Level	Source Result	%REC	%REC Limits	RPD	RPD Limit	Data Qualifiers
Batch: 9H10057 Extracted: 08/10/09											
LCS Analyzed: 08/10/2009 (9H10057-BS1)											
Alkalinity as CaCO3	180	2.0	N/A	mg/l	186		97	90-110			
Duplicate Analyzed: 08/10/2009 (9H10057-DUP1)						**Source: ISH0576-01**					
Alkalinity as CaCO3	120	2.0	N/A	mg/l		120			0	20	
Bicarbonate	146	2.4	N/A	mg/l		146			0	20	
Carbonate	ND	1.2	N/A	mg/l		ND				20	
Hydroxide	ND	0.70	N/A	mg/l		ND				20	
Batch: 9H10077 Extracted: 08/10/09											
Blank Analyzed: 08/10/2009 (9H10077-BLK1)											
Chemical Oxygen Demand	ND	20	N/A	mg/l							
LCS Analyzed: 08/10/2009 (9H10077-BS1)											
Chemical Oxygen Demand	202	20	N/A	mg/l	200		101	90-110			
Matrix Spike Analyzed: 08/10/2009 (9H10077-MS1)						**Source: ISH0566-03**					
Chemical Oxygen Demand	216	20	N/A	mg/l	200	16.5	100	70-120			
Matrix Spike Dup Analyzed: 08/10/2009 (9H10077-MSD1)						**Source: ISH0566-03**					
Chemical Oxygen Demand	207	20	N/A	mg/l	200	16.5	95	70-120	4	15	
Batch: 9H11007 Extracted: 08/11/09											
Blank Analyzed: 08/11/2009 (9H11007-BLK1)											
Total Dissolved Solids	ND	10	N/A	mg/l							

TestAmerica Irvine

Joseph Doak
Project Manager

The results pertain only to the samples tested in the laboratory. This report shall not be reproduced, except in full, without written permission from TestAmerica.

TestAmerica
THE LEADER IN ENVIRONMENTAL TESTING

17461 Derian Avenue. Suite 100, Irvine, CA 92614 (949) 261-1022 Fax:(949) 260-3297

Applied Process Technology
3333 Vincent Road, Suite 222
Pleasant Hill, CA 94523
Attention: Keel Robinson

Project ID: Montrose-Torrance Bench Study
P1190
Report Number: ISH0701

Sampled: 08/07/09
Received: 08/08/09

METHOD BLANK/QC DATA

INORGANICS

Analyte	Result	Reporting Limit	MDL	Units	Spike Level	Source Result	%REC	%REC Limits	RPD	RPD Limit	Data Qualifiers
Batch: 9H11007 Extracted: 08/11/09											
LCS Analyzed: 08/11/2009 (9H11007-BS1)											
Total Dissolved Solids	998	10	N/A	mg/l	1000		100	90-110			
Duplicate Analyzed: 08/11/2009 (9H11007-DUP1)						**Source: ISH0672-02**					
Total Dissolved Solids	1330	10	N/A	mg/l		1350			1	10	
Batch: 9H11102 Extracted: 08/11/09											
Blank Analyzed: 08/11/2009 (9H11102-BLK1)											
Hardness (as CaCO3)	ND	4.0	N/A	mg/l							
LCS Analyzed: 08/11/2009 (9H11102-BS1)											
Hardness (as CaCO3)	120	4.0	N/A	mg/l	123		98	90-110			
Duplicate Analyzed: 08/11/2009 (9H11102-DUP1)						**Source: ISH0435-02**					
Hardness (as CaCO3)	224	4.0	N/A	mg/l		226			1	20	
Batch: 9H18058 Extracted: 08/18/09											
Blank Analyzed: 08/18/2009 (9H18058-BLK1)											
4-Chlorobenzenesulfonic acid	ND	10	N/A	ug/l							
LCS Analyzed: 08/18/2009 (9H18058-BS1)											
4-Chlorobenzenesulfonic acid	94.9	10	N/A	ug/l	100		95	85-115			
Matrix Spike Analyzed: 08/18/2009 (9H18058-MS1)						**Source: ISH0701-02**					
4-Chlorobenzenesulfonic acid	34500	1000	N/A	ug/l	10000	24400	101	80-120			

TestAmerica Irvine

Joseph Doak
Project Manager

The results pertain only to the samples tested in the laboratory. This report shall not be reproduced, except in full, without written permission from TestAmerica.

TestAmerica
THE LEADER IN ENVIRONMENTAL TESTING
17461 Derian Avenue. Suite 100, Irvine, CA 92614 (949) 261-1022 Fax:(949) 260-3297

Applied Process Technology
3333 Vincent Road, Suite 222
Pleasant Hill, CA 94523
Attention: Keel Robinson

Project ID: Montrose-Torrance Bench Study
P1190
Report Number: ISH0701

Sampled: 08/07/09
Received: 08/08/09

METHOD BLANK/QC DATA

INORGANICS

Analyte	Result	Reporting Limit	MDL	Units	Spike Level	Source Result	%REC	%REC Limits	RPD	RPD Limit	Data Qualifiers
Batch: 9H18058 Extracted: 08/18/09											
Matrix Spike Dup Analyzed: 08/18/2009 (9H18058-MSD1)						**Source: ISH0701-02**					
4-Chlorobenzenesulfonic acid	34600	1000	N/A	ug/l	10000	24400	102	80-120	0	20	

TestAmerica Irvine

Joseph Doak
Project Manager

The results pertain only to the samples tested in the laboratory. This report shall not be reproduced, except in full, without written permission from TestAmerica.

TestAmerica
THE LEADER IN ENVIRONMENTAL TESTING

17461 Derian Avenue. Suite 100, Irvine, CA 92614 (949) 261-1022 Fax:(949) 260-3297

Applied Process Technology 3333 Vincent Road, Suite 222 Pleasant Hill, CA 94523 Attention: Keel Robinson	Project ID: Montrose-Torrance Bench Study P1190 Report Number: ISH0701	Sampled: 08/07/09 Received: 08/08/09

DATA QUALIFIERS AND DEFINITIONS

C	Calibration Verification recovery was above the method control limit for this analyte. Analyte not detected, data not impacted.
J	Estimated value. Analyte detected at a level less than the Reporting Limit (RL) and greater than or equal to the Method Detection Limit (MDL). The user of this data should be aware that this data is of limited reliability.
M1	The MS and/or MSD were above the acceptance limits due to sample matrix interference. See Blank Spike (LCS).
MHA	Due to high levels of analyte in the sample, the MS/MSD calculation does not provide useful spike recovery information. See Blank Spike (LCS).
ND	Analyte NOT DETECTED at or above the reporting limit or MDL, if MDL is specified.
RPD	Relative Percent Difference

ADDITIONAL COMMENTS

For 8260 analyses:

Due to the high water solubility of alcohols and ketones, the calibration criteria for these compounds is <30% RSD. The average % RSD of all compounds in the calibration is 15%, in accordance with EPA methods.

TestAmerica Irvine

Joseph Doak
Project Manager

The results pertain only to the samples tested in the laboratory. This report shall not be reproduced, except in full, without written permission from TestAmerica.

TestAmerica
THE LEADER IN ENVIRONMENTAL TESTING

17461 Derian Avenue. Suite 100, Irvine, CA 92614 (949) 261-1022 Fax:(949) 260-3297

Applied Process Technology 3333 Vincent Road, Suite 222 Pleasant Hill, CA 94523 Attention: Keel Robinson	Project ID: Montrose-Torrance Bench Study P1190 Report Number: ISH0701	Sampled: 08/07/09 Received: 08/08/09

Certification Summary

TestAmerica Irvine

Method	Matrix	Nelac	California
EPA 300.0	Water	X	X
EPA 314.0 MOD.	Water		
EPA 6010B-Diss	Water	X	X
EPA 8260B	Water	X	X
Filtration	Water	N/A	N/A
SM2320B	Water	X	X
SM2340C	Water	X	X
SM2540C	Water	X	
SM5220D	Water	X	X
SM5310B	Water	X	X

Nevada and NELAP provide analyte specific accreditations. Analyte specific information for TestAmerica may be obtained by contacting the laboratory or visiting our website at www.testamericainc.com

TestAmerica Irvine

Joseph Doak
Project Manager

The results pertain only to the samples tested in the laboratory. This report shall not be reproduced, except in full, without written permission from TestAmerica.

TestAmerica

THE LEADER IN ENVIRONMENTAL TESTING

CHAIN OF CUSTODY FORM

17461 Derian Ave., #100, Irvine, CA 92614 (949) 261-1022 FAX (949) 260-3297
1014 E. Cooley Dr., Suite A, Colton, CA 92324 (909) 370-4667 FAX (909) 370-1046
9830 South 51st St., Suite B-120, Phoenix, AZ 85044 (480) 785-0043 FAX (480) 785-0851
2520 E. Sunset Rd. #3, Las Vegas, NV 89120 (702) 798-3620 FAX (702) 798-3621

TAL-0013(1007)

181/0709

Client Name/Address: Applied Process Technology, Inc
3329 Vincent Rd
Pleasant Hill, CA 94523

Project/PO Number: P119Θ

Project Manager: Keel Robinson
Krobinson@aptwater.com

Phone Number: 925-977-1811

Sampler: Diane West

Fax Number: 925-977-1818

Analysis Required

Sample Description	Sample Matrix	Container Type	# of Cont.	Sampling Date	Sampling Time	Preservatives	TOC SM5310B	COD SM5220D	General Minerals + TDS	Hardness SM2340C	PCBs/A EPA 314.0	VOCs 8260B				Special Instructions
P119Θ-SP-0A-5ΘΘ			8	080709	1045		X	X	X	X	X	X				
-1-5ΘΘ			4		1120						X	X				
-2-5ΘΘ			4		1150						X	X				
-3-5ΘΘ			4		1220						X	X				
-4-5ΘΘ			4		1300						X	X				
-5-5ΘΘ			4		1320						X	X				
-6-5ΘΘ			4		1345						X	X				
-7-5ΘΘ			4		1405						X	X				
-8-5ΘΘ			4		1415						X	X				
-9-55Θ			4		1500						X	X				
-1Θ-55Θ			4		1515						X	X				
-11-55Θ			4		1530						X	X				
P119Θ-SP-12-55Θ			4	080709	1545						X	X				

CMK 8/7/09

Am 1300 8/8/09

Relinquished By:	Date/Time:	Received By:	Date/Time:	Turnaround Time: (Check)
Craig M Kell	8/7/09 / 1700		8/8/09 4:11	same day ____ 72 hours ____
Relinquished By:	Date/Time:	Received By:	Date/Time:	24 hours ____ 5 days ____
				48 hours ____ normal X
Relinquished By:	Date/Time:	Received in Lab By:	Date/Time:	Sample Integrity: (Check)
				intact X on ice X

Note: By relinquishing samples to TestAmerica, client agrees to pay for the services requested on this chain of custody form and any additional analyses performed on this project. Payment for services is due within 30 days from the date of invoice. Sample(s) will be disposed of after 30 days.

4.1 C

MWH Laboratories
A Division of MWH Americas, Inc.

750 Royal Oak Dr., Suite 100
Monrovia, California, 91016-3629
Tel: 626 386 1100
Fax: 626 386 1101
1 800 566 LABS (1 800 566 5227)

Laboratory Report

for

Applied Process Technologies
333 Vincent Road, Suite 222
Pleasant Hill, CA 94523
Attention: Keel Robinson
Fax: 925-977-1818

Date of Issue
08/23/2009
MWH LABORATORIES

RCZ: Rick Zimmer

Project Manager

ACCREDITED IN ACCORDANCE WITH nelac 01114CA

Report#: 311742
Project: P1190
Group: Bromate

Laboratory certifies that the test results meet all **NELAC** requirements unless noted in the Comments section or the Case Narrative. Following the cover page are Hits Reports, Comments, QC Summary, QC Report and Regulatory Forms. This report shall not be reproduced except in full, without the written approval of the laboratory.

MWH Laboratories

750 Royal Oaks Drive Suite 100, Monrovia, Ca 91016
Phone 626-386-1100/Fax: 626-386-1101

Acknowledgement of Samples Received

Applied Process Technologies
333 Vincent Road, Suite 222
Pleasant Hill, CA 94523
Attn: Keel Robinson
Phone: 925-977-1811

Customer Code: APT
Group #: 311742
Project #: P1190
Sample Group: Bromate
Project Manager: Rick Zimmer
Phone: 626-386-1157

The following samples were received from you on **August 11, 2009**. They have been scheduled for the tests listed below each sample. If this information is incorrect, please contact your service representative. Thank you for using MWH Laboratories.

Sample #	Sample Id	Sample Date
200908110229	P1190-SP-0A-500	07-Aug-2009 1045
	Bromate by UV/VIS; Bromide by 300.0	
200908110230	P1190-SP-0B-550	07-Aug-2009 1450
	Bromate by UV/VIS; Bromide by 300.0	
200908110231	P1190-SP-1-500	07-Aug-2009 1120
	Bromate by UV/VIS; Bromide by 300.0	
200908110232	P1190-SP-2-500	07-Aug-2009 1150
	Bromate by UV/VIS; Bromide by 300.0	
200908110233	P1190-SP-3-500	07-Aug-2009 1220
	Bromate by UV/VIS; Bromide by 300.0	
200908110234	P1190-SP-4-500	07-Aug-2009 1310
	Bromate by UV/VIS; Bromide by 300.0	
200908110235	P1190-SP-5-500	07-Aug-2009 1330
	Bromate by UV/VIS; Bromide by 300.0	
200908110236	P1190-SP-6-500	07-Aug-2009 1350
	Bromate by UV/VIS; Bromide by 300.0	
200908110237	P1190-SP-7-500	07-Aug-2009 1410
	Bromate by UV/VIS; Bromide by 300.0	
200908110238	P1190-SP-8-500	07-Aug-2009 1430
	Bromate by UV/VIS; Bromide by 300.0	
200908110239	P1190-SP-9-550	07-Aug-2009 1505
	Bromate by UV/VIS; Bromide by 300.0	
200908110240	P1190-SP-10-550	07-Aug-2009 1520
	Bromate by UV/VIS; Bromide by 300.0	

MWH Laboratories

750 Royal Oaks Drive Suite 100, Monrovia, Ca 91016
Phone 626-386-1100/Fax: 626-386-1101

Acknowledgement of Samples Received

Applied Process Technologies
333 Vincent Road, Suite 222
Pleasant Hill, CA 94523
Attn: Keel Robinson
Phone: 925-977-1811

Customer Code: APT
Group #: 311742
Project #: P1190
Sample Group: Bromate
Project Manager: Rick Zimmer
Phone: 626-386-1157

The following samples were received from you on **August 11, 2009**. They have been scheduled for the tests listed below each sample. If this information is incorrect, please contact your service representative. Thank you for using MWH Laboratories.

Sample #	Sample Id	Sample Date
200908110241	P1190-SP-11-550	07-Aug-2009 1530
	Bromate by UV/VIS — Bromide by 300.0	
200908110242	P1190-SP-12-550	07-Aug-2009 1555
	Bromate by UV/VIS — Bromide by 300.0	

Test Description

MWH Laboratories
A Division of MWH Americas, Inc.

750 Royal Oaks Drive, Suite 100
Monrovia, California 91016-3629
Tel: 626 386 1100
Fax: 626 386 1101
1 800 566 LABS (1 800 566 5227)

CHAIN OF CUSTODY RECORD

311742

MWH LABS USE ONLY:

LOGIN COMMENTS: _____

SAMPLES CHECKED AGAINST COC BY: JT

SAMPLES LOGGED IN BY: MCD

SAMPLE TEMP WHEN REC'D AT LAB: 4° (Compliance: 4 +/- 2*C)

SAMPLES REC'D DAY OF COLLECTION? ☐ (check for yes)

CONDITION OF BLUE ICE: FROZEN ___ PARTIALLY FROZEN ___ THAWED ___

TO BE COMPLETED BY SAMPLER:

COMPANY/AGENCY NAME:	PROJECT CODE:	COMPLIANCE SAMPLES (check for yes) ☐ - Requires state forms ☐	NON-COMPLIANCE SAMPLES (check for yes) ☐ REGULATION INVOLVED:
Applied Process Technology	P1190	Type of samples (circle one): ROUTINE SPECIAL CONFIRMATION	(eg. SDWA, Phase V, NPDES, FDA,...)
MWH LABS CLIENT CODE: / COC ID: Montrose Torrance	SAMPLE GROUP: EarthTech - mixed well water	SEE ATTACHED BOTTLE ORDER FOR ANALYSES ☐ (check for yes), OR list ANALYSES REQUIRED (enter number of bottles sent for each test for each sample)	
SAMPLER PRINTED NAME AND SIGNATURE: Ricardo Villalobos	TAT requested: rush by adv notice only / STANDARD TURNAROUND		

SAMPLE DATE	SAMPLE TIME	SAMPLE ID	CLIENT LAB ID	MATRIX *	Field Data	Field Data	Bromide EPA 300.0A	Bromate UV-Vis EPA 317													SAMPLER COMMENTS
8/7/09	10:45	P1190-SP-0A-500		RGW			X	X													
8/7/09	14:50	P1190-SP-0B-550		RGW			X	X													
8/7/09	11:20	P1190-SP-1-500		WW			X	X													
8/7/09	11:50	P1190-SP-2-500		WW			X	X													
8/7/09	12:20	P1190-SP-3-500		WW			X	X													
8/7/09	13:10	P1190-SP-4-500		WW			X	X													
8/7/09	13:30	P1190-SP-5-500		WW			X	X													
8/7/09	13:50	P1190-SP-6-500		WW			X	X													
8/7/09	14:10	P1190-SP-7-500		WW			X	X													
8/7/09	14:30	P1190-SP-8-500		WW			X	X													
8/7/09	15:05	P1190-SP-9-550		WW			X	X													
8/7/09	15:20	P1190-SP-10-550		WW			X	X													
8/7/09	15:30	P1190-SP-11-550		WW			X	X													
8/7/09	15:55	P1190-SP-12-550		WW			X	X													

*** MATRIX TYPES:** RSW = Raw Surface Water; RGW = Raw Ground Water; CFW = Chlor(am)inated Finished Water; FW = Other Finished Water; SEAW = Sea Water; WW = Waste Water; BW = Bottled Water; SW = Storm Water; SO = Soil; SL = Sludge; O = Other - Please Identify

	SIGNATURE	PRINT NAME	COMPANY/TITLE	DATE	TIME
RELINQUISHED BY:		Ricardo Villalobos	Applied Process Technology	8/10/09	12:00
RECEIVED BY:		JT/MCD	MWH	8-11	10:11
RELINQUISHED BY:					
RECEIVED BY:					

C-O-C# _____

From: Origin ID: CCRA (925) 977-1811
Diana West
Applied Process Technology, Inc
3330 Vincent Road
Suite A
Pleasant Hill, CA 94523

J09200906152023

Ship Date: 10AUG09
ActWgt: 9.0 LB
CAD: 4553525/INET9060
Account#: S *********

Dims: 13 X 11 X 10 IN

Delivery Address Bar Code

Ref # P-1390 - Lab Samples NB
Invoice #
PO #
Dept #

SHIP TO: (626) 386-1157 **BILL SENDER**

Rick Zimmer
MWH Laboratory - Monrovia
750 ROYAL OAKS DR STE 100
STE.100
MONROVIA, CA 91016

TRK# 0201 7978 3665 2557

TUE - 11AUG **A1**
PRIORITY OVERNIGHT

91 WHPA

91016
CA-US
BUR

After printing this label:
1. Use the 'Print' button on this page to print your label to your laser or inkjet printer.
2. Fold the printed page along the horizontal line.
3. Place label in shipping pouch and affix it to your shipment so that the barcode portion of the label can be read and scanned.

Warning: Use only the printed original label for shipping. Using a photocopy of this label for shipping purposes is fraudulent and could result in additional billing charges, along with the cancellation of your FedEx account number.

Use of this system constitutes your agreement to the service conditions in the current FedEx Service Guide, available on fedex.com.FedEx will not be responsible for any claim in excess of $100 per package, whether the result of loss, damage, delay, non-delivery,misdelivery,or misinformation, unless you declare a higher value, pay an additional charge, document your actual loss and file a timely claim.Limitations found in the current FedEx Service Guide apply. Your right to recover from FedEx for any loss, including intrinsic valueof the package, loss of sales, income interest, profit, attorney's fees, costs, and other forms of damage whether direct, incidental,consequential, or special is limited to the greater of $100 or the authorized declared value. Recovery cannot exceed actual documented loss.Maximum for items of extraordinary value is $500, e.g. jewelry, precious metals, negotiable instruments and other items listed in our ServiceGuide. Written claims must be filed within strict time limits, see current FedEx Service Guide.

5/12

MWH Laboratories
A Division of MWH Americas, Inc.

750 Royal Oak Dr., Suite 100
Monrovia, California, 91016-3629
Tel: 626 386 1100
Fax: 626 386 1101
1 800 566 LABS (1 800 566 5227)

Laboratory
Hits Report: 311742

Applied Process Technologies
Keel Robinson
333 Vincent Road, Suite 222
Pleasant Hill, CA 94523

Samples Received on:
08/11/2009

Analyzed	Analyte	Sample ID	Result	Federal MCL	Units	MRL
		200908110229 **P1190-SP-0A-500**				
08/14/2009 06:28	Bromide		430		ug/L	25
		200908110230 **P1190-SP-0B-550**				
08/15/2009 16:48	Bromide		490		ug/L	25
		200908110231 **P1190-SP-1-500**				
08/20/2009 20:37	Bromate by UV/VIS		5.6	10	ug/L	1
08/14/2009 07:23	Bromide		420		ug/L	25
		200908110232 **P1190-SP-2-500**				
08/20/2009 21:05	Bromate by UV/VIS		5.0	10	ug/L	1
08/14/2009 07:51	Bromide		400		ug/L	25
		200908110233 **P1190-SP-3-500**				
08/20/2009 22:27	Bromate by UV/VIS		4.1	10	ug/L	1
08/14/2009 08:18	Bromide		430		ug/L	25
		200908110234 **P1190-SP-4-500**				
08/20/2009 22:55	Bromate by UV/VIS		4.6	10	ug/L	1
08/15/2009 17:15	Bromide		420		ug/L	25
		200908110235 **P1190-SP-5-500**				
08/21/2009 00:17	Bromate by UV/VIS		4.5	10	ug/L	1
08/14/2009 09:13	Bromide		420		ug/L	25
		200908110236 **P1190-SP-6-500**				
08/21/2009 00:44	Bromate by UV/VIS		4.2	10	ug/L	1
08/14/2009 12:38	Bromide		420		ug/L	25
		200908110237 **P1190-SP-7-500**				
08/21/2009 03:56	Bromate by UV/VIS		5.4	10	ug/L	1
08/14/2009 13:05	Bromide		440		ug/L	25
		200908110238 **P1190-SP-8-500**				
08/21/2009 04:23	Bromate by UV/VIS		6.0	10	ug/L	1
08/14/2009 13:32	Bromide		410		ug/L	25
		200908110239 **P1190-SP-9-550**				
08/21/2009 05:46	Bromate by UV/VIS		6.1	10	ug/L	1
08/14/2009 14:00	Bromide		520		ug/L	25
		200908110240 **P1190-SP-10-550**				
08/21/2009 06:13	Bromate by UV/VIS		4.9	10	ug/L	1
08/14/2009 14:27	Bromide		470		ug/L	25

SUMMARY OF POSITIVE DATA ONLY

MWH Laboratories
A Division of MWH Americas, Inc.

750 Royal Oak Dr., Suite 100
Monrovia, California, 91016-3629
Tel: 626 386 1100
Fax: 626 386 1101
1 800 566 LABS (1 800 566 5227)

Laboratory
Hits Report: 311742

Applied Process Technologies
Keel Robinson
333 Vincent Road, Suite 222
Pleasant Hill, CA 94523

Samples Received on:
08/11/2009

Analyzed		Analyte	Sample ID	Result	Federal MCL	Units	MRL
			200908110241 **P1190-SP-11-550**				
08/21/2009	07:35	Bromate by UV/VIS		5.3	10	ug/L	1
08/14/2009	14:55	Bromide		480		ug/L	25
			200908110242 **P1190-SP-12-550**				
08/21/2009	08:03	Bromate by UV/VIS		4.6	10	ug/L	1
08/14/2009	15:22	Bromide		470		ug/L	25

SUMMARY OF POSITIVE DATA ONLY

MWH Laboratories
A Division of MWH Americas, Inc.

750 Royal Oak Dr., Suite 100
Monrovia, California, 91016-3629
Tel: 626 386 1100
Fax: 626 386 1101
1 800 566 LABS (1 800 566 5227)

Laboratory Data
Report: 311742

Applied Process Technologies
Keel Robinson
333 Vincent Road, Suite 222
Pleasant Hill, CA 94523

Samples Received on:
08/11/2009

Prepared	Analyzed	QC Ref #	Method	Analyte	Result	Units	MRL	Dilution
P1190-SP-0A-500 (200908110229)						**Sampled on**	**08/07/2009 1045**	
	EPA 317 - Bromate by UV/VIS 317							
	08/20/2009 18:47	521246	(EPA 317)	Bromate by UV/VIS	ND	ug/L	1	1
	EPA 300.0 - Disinfection ByProducts by 300.0							
	08/14/2009 06:28	520090	(EPA 300.0)	Bromide	430	ug/L	25	5
P1190-SP-0B-550 (200908110230)						**Sampled on**	**08/07/2009 1450**	
	EPA 317 - Bromate by UV/VIS 317							
	08/20/2009 19:15	521246	(EPA 317)	Bromate by UV/VIS	ND	ug/L	1	1
	EPA 300.0 - Disinfection ByProducts by 300.0							
	08/15/2009 16:48	520559	(EPA 300.0)	Bromide	490	ug/L	25	5
P1190-SP-1-500 (200908110231)						**Sampled on**	**08/07/2009 1120**	
	EPA 317 - Bromate by UV/VIS 317							
	08/20/2009 20:37	521246	(EPA 317)	Bromate by UV/VIS	5.6	ug/L	1	1
	EPA 300.0 - Disinfection ByProducts by 300.0							
	08/14/2009 07:23	520090	(EPA 300.0)	Bromide	420	ug/L	25	5
P1190-SP-2-500 (200908110232)						**Sampled on**	**08/07/2009 1150**	
	EPA 317 - Bromate by UV/VIS 317							
	08/20/2009 21:05	521246	(EPA 317)	Bromate by UV/VIS	5.0	ug/L	1	1
	EPA 300.0 - Disinfection ByProducts by 300.0							
	08/14/2009 07:51	520090	(EPA 300.0)	Bromide	400	ug/L	25	5
P1190-SP-3-500 (200908110233)						**Sampled on**	**08/07/2009 1220**	
	EPA 317 - Bromate by UV/VIS 317							
	08/20/2009 22:27	521246	(EPA 317)	Bromate by UV/VIS	4.1	ug/L	1	1
	EPA 300.0 - Disinfection ByProducts by 300.0							
	08/14/2009 08:18	520090	(EPA 300.0)	Bromide	430	ug/L	25	5
P1190-SP-4-500 (200908110234)						**Sampled on**	**08/07/2009 1310**	
	EPA 317 - Bromate by UV/VIS 317							
	08/20/2009 22:55	521246	(EPA 317)	Bromate by UV/VIS	4.6	ug/L	1	1
	EPA 300.0 - Disinfection ByProducts by 300.0							
	08/15/2009 17:15	520559	(EPA 300.0)	Bromide	420	ug/L	25	5
P1190-SP-5-500 (200908110235)						**Sampled on**	**08/07/2009 1330**	

Rounding on totals after summation.
(c) - indicates calculated results

MWH Laboratories
A Division of MWH Americas, Inc.

750 Royal Oak Dr., Suite 100
Monrovia, California, 91016-3629
Tel: 626 386 1100
Fax: 626 386 1101
1 800 566 LABS (1 800 566 5227)

Laboratory Data
Report: 311742

Applied Process Technologies
Keel Robinson
333 Vincent Road, Suite 222
Pleasant Hill, CA 94523

Samples Received on:
08/11/2009

Prepared	Analyzed	QC Ref #	Method	Analyte	Result	Units	MRL	Dilution
		EPA 317 - Bromate by UV/VIS 317						
	08/21/2009 00:17	521246	(EPA 317)	Bromate by UV/VIS	4.5	ug/L	1	1
		EPA 300.0 - Disinfection ByProducts by 300.0						
	08/14/2009 09:13	520090	(EPA 300.0)	Bromide	420	ug/L	25	5
P1190-SP-6-500 (200908110236)						**Sampled on**	**08/07/2009 1350**	
		EPA 317 - Bromate by UV/VIS 317						
	08/21/2009 00:44	521246	(EPA 317)	Bromate by UV/VIS	4.2	ug/L	1	1
		EPA 300.0 - Disinfection ByProducts by 300.0						
	08/14/2009 12:38	520090	(EPA 300.0)	Bromide	420	ug/L	25	5
P1190-SP-7-500 (200908110237)						**Sampled on**	**08/07/2009 1410**	
		EPA 317 - Bromate by UV/VIS 317						
	08/21/2009 03:56	521246	(EPA 317)	Bromate by UV/VIS	5.4	ug/L	1	1
		EPA 300.0 - Disinfection ByProducts by 300.0						
	08/14/2009 13:05	520090	(EPA 300.0)	Bromide	440	ug/L	25	5
P1190-SP-8-500 (200908110238)						**Sampled on**	**08/07/2009 1430**	
		EPA 317 - Bromate by UV/VIS 317						
	08/21/2009 04:23	521246	(EPA 317)	Bromate by UV/VIS	6.0	ug/L	1	1
		EPA 300.0 - Disinfection ByProducts by 300.0						
	08/14/2009 13:32	520090	(EPA 300.0)	Bromide	410	ug/L	25	5
P1190-SP-9-550 (200908110239)						**Sampled on**	**08/07/2009 1505**	
		EPA 317 - Bromate by UV/VIS 317						
	08/21/2009 05:46	521246	(EPA 317)	Bromate by UV/VIS	6.1	ug/L	1	1
		EPA 300.0 - Disinfection ByProducts by 300.0						
	08/14/2009 14:00	520090	(EPA 300.0)	Bromide	520	ug/L	25	5
P1190-SP-10-550 (200908110240)						**Sampled on**	**08/07/2009 1520**	
		EPA 317 - Bromate by UV/VIS 317						
	08/21/2009 06:13	521246	(EPA 317)	Bromate by UV/VIS	4.9	ug/L	1	1
		EPA 300.0 - Disinfection ByProducts by 300.0						
	08/14/2009 14:27	520090	(EPA 300.0)	Bromide	470	ug/L	25	5
P1190-SP-11-550 (200908110241)						**Sampled on**	**08/07/2009 1530**	
		EPA 317 - Bromate by UV/VIS 317						
	08/21/2009 07:35	521246	(EPA 317)	Bromate by UV/VIS	5.3	ug/L	1	1

Rounding on totals after summation.
(c) - indicates calculated results

MWH Laboratories
A Division of MWH Americas, Inc.

750 Royal Oak Dr., Suite 100
Monrovia, California, 91016-3629
Tel: 626 386 1100
Fax: 626 386 1101
1 800 566 LABS (1 800 566 5227)

Laboratory Data
Report: 311742

Applied Process Technologies
Keel Robinson
333 Vincent Road, Suite 222
Pleasant Hill, CA 94523

Samples Received on:
08/11/2009

Prepared	Analyzed	QC Ref #	Method	Analyte	Result	Units	MRL	Dilution
		EPA 300.0 - Disinfection ByProducts by 300.0						
	08/14/2009 14:55	520090	(EPA 300.0)	Bromide	480	ug/L	25	5
P1190-SP-12-550 (200908110242)						**Sampled on**	**08/07/2009 1555**	
		EPA 317 - Bromate by UV/VIS 317						
	08/21/2009 08:03	521246	(EPA 317)	Bromate by UV/VIS	4.6	ug/L	1	1
		EPA 300.0 - Disinfection ByProducts by 300.0						
	08/14/2009 15:22	520090	(EPA 300.0)	Bromide	470	ug/L	25	5

Rounding on totals after summation.
(c) - indicates calculated results

MWH Laboratories
A Division of MWH Americas, Inc.

750 Royal Oak Dr., Suite 100
Monrovia, California, 91016-3629
Tel: 626 386 1100
Fax: 626 386 1101
1 800 566 LABS (1 800 566 5227)

Applied Process Technologies

QC Ref # 520090 - Disinfection ByProducts by 300.0 **Analysis Date: 08/14/2009**

200908110229	P1190-SP-0A-500	Analyzed by: SER
200908110231	P1190-SP-1-500	Analyzed by: SER
200908110232	P1190-SP-2-500	Analyzed by: SER
200908110233	P1190-SP-3-500	Analyzed by: SER
200908110235	P1190-SP-5-500	Analyzed by: SER
200908110236	P1190-SP-6-500	Analyzed by: SER
200908110237	P1190-SP-7-500	Analyzed by: SER
200908110238	P1190-SP-8-500	Analyzed by: SER
200908110239	P1190-SP-9-550	Analyzed by: SER
200908110240	P1190-SP-10-550	Analyzed by: SER
200908110241	P1190-SP-11-550	Analyzed by: SER
200908110242	P1190-SP-12-550	Analyzed by: SER

QC Ref # 520559 - Disinfection ByProducts by 300.0 **Analysis Date: 08/15/2009**

200908110230	P1190-SP-0B-550	Analyzed by: SER
200908110234	P1190-SP-4-500	Analyzed by: SER

QC Ref # 521246 - Bromate by UV/VIS 317 **Analysis Date: 08/20/2009**

200908110229	P1190-SP-0A-500	Analyzed by: TLH
200908110230	P1190-SP-0B-550	Analyzed by: TLH
200908110231	P1190-SP-1-500	Analyzed by: TLH
200908110232	P1190-SP-2-500	Analyzed by: TLH
200908110233	P1190-SP-3-500	Analyzed by: TLH
200908110234	P1190-SP-4-500	Analyzed by: TLH
200908110235	P1190-SP-5-500	Analyzed by: TLH
200908110236	P1190-SP-6-500	Analyzed by: TLH
200908110237	P1190-SP-7-500	Analyzed by: TLH
200908110238	P1190-SP-8-500	Analyzed by: TLH
200908110239	P1190-SP-9-550	Analyzed by: TLH
200908110240	P1190-SP-10-550	Analyzed by: TLH
200908110241	P1190-SP-11-550	Analyzed by: TLH
200908110242	P1190-SP-12-550	Analyzed by: TLH

MWH Laboratories
A Division of MWH Americas, Inc.

750 Royal Oak Dr., Suite 100
Monrovia, California, 91016-3629
Tel: 626 386 1100
Fax: 626 386 1101
1 800 566 LABS (1 800 566 5227)

Laboratory
QC Report: 311742

Applied Process Technologies

QC Type	Analyte	Native	Spiked	Recovered	Units	Yield (%)	Limits (%)	RPDLimit (%)	RPD%
QC Ref# 520090 - Disinfection ByProducts by 300.0 by EPA 300.0						**Analysis Date: 08/14/2009**			
LCS1	Bromide		100	101	ug/L	101	(90-110)		
LCS2	Bromide		100	99.9	ug/L	100	(90-110)	10	1.1
MBLK	Bromide			<5.0	ug/L				
MRL_CHK	Bromide		5.0	4.85	ug/L	97	(50-150)		
MS_200908040010	Bromide	8.7	50	59.7	ug/L	102	(80-120)		
MS2_200908110536	Bromide	23	50	82.1	ug/L	118	(80-120)		
MSD_200908040010	Bromide	8.7	50	57.2	ug/L	97	(80-120)	15	5.1
MSD2_200908110536	Bromide	23	50	74.3	ug/L	103	(80-120)	15	14
QC Ref# 520559 - Disinfection ByProducts by 300.0 by EPA 300.0						**Analysis Date: 08/15/2009**			
LCS1	Bromide		100	97.5	ug/L	98	(90-110)		
LCS2	Bromide		100	99.4	ug/L	99	(90-110)	10	1.9
MBLK	Bromide			<5.0	ug/L				
MRL_CHK	Bromide		5.0	5.52	ug/L	110	(50-150)		
MS_200908110253	Bromide	ND	50	50.1	ug/L	100	(80-120)		
MSD_200908110253	Bromide	ND	50	51.4	ug/L	103	(80-120)	15	3.0
QC Ref# 521246 - Bromate by UV/VIS 317 by EPA 317						**Analysis Date: 08/20/2009**			
LCS1	Bromate by UV/VIS		10	9.34	ug/L	93	(90-110)		
LCS2	Bromate by UV/VIS		10	9.63	ug/L	96	(90-110)	20	3.1
MBLK	Bromate by UV/VIS			<1	ug/L				
MRL_CHK	Bromate by UV/VIS		1.0	0.824	ug/L	82	(75-125)		
MS_200908190353	Bromate by UV/VIS	ND	5.0	5.39	ug/L	108	(75-125)		
MS2_200908110258	Bromate by UV/VIS	ND	5.0	5.93	ug/L	104	(75-125)		
MSD_200908190353	Bromate by UV/VIS	ND	5.0	5.31	ug/L	106	(75-125)	15	1.9
MSD2_200908110258	Bromate by UV/VIS	ND	5.0	5.72	ug/L	99	(75-125)	15	4.6

Spike recovery is already corrected for native results.
Spikes which exceed Limits and Method Blanks with positive results are highlighted by Underlining.
Criteria for MS and Dup are advisory only, batch control is based on LCS. Criteria for duplicates are advisory only, unless otherwise specified in the method.
(S) Indicates surrogate compound.
(I) Indicates internal standard compound.
RPD not calculated for LCS2 when different a concentration than LCS1 is used
RPD not calculated for Duplicates when the result is not five times the MRL (Minimum Reporting Level)