METHOD 9

REF: Regs 8-4-201, 8-4-302, 8-4-303
8-4-310, 8-4-311

DETERMINATION OF COMPLIANCE OF SOLVENTS, COATINGS, AND RELATED PRODUCTS

1) PRINCIPLE

The test performed in this procedure are designed so that the paraffinic olefinic, aromatic and oxygenated hydrocarbons found in solvents, coatings and related products may be individually identified and determined.

The analysis scheme is outlined in **Figures III-1** and **III-2**. Solvents are treated as is; whereas coatings must be steam distilled to isolate the hydrocarbon fraction for further identification.

Fluorescent Indicator Analysis **(FIA)** is first performed on the solvent or water immiscible hydrocarbon fraction of the distillate to ascertain the volume percent of the different organic classes. Two FIA procedures are used, one for petroleum related products containing olefins, aromatics and saturates; and the other for solvents which contain oxygenated hydrocarbons in the presence of aromatics and saturates. Compliance may be determined on the basis of the appropriate FIA; if compliance is not defined sufficiently, gas chromatography is necessary for identifying specific compounds in the mixture.

The gas chromatographic procedures are somewhat complex utilizing various analytical columns and subtractive techniques. First, obtain a chromatogram of the solvent or solvent diluted with CS_2. For the selective removal of oxygenated hydrocarbons, 85% sulfuric acid is used. For the selective removal of olefins, aromatics and oxygenated hydrocarbons, sulfonation acid is utilized.

A second and possibly third chromatogram is then obtained by the selective subtractive techniques applied to the diluted mixture. By comparison of the chromatograms, it is possible to identify the composition and class compounds required for determining compliance with the regulation.

2) APPARATUS

2.1 **Fluorescent Indicator Analysis Apparatus.** As shown in **Figure III-3.**

2.2 **Pressurized Gas Manifold (Nitrogen or Air),** equipped with an open end mercury manometer.

2.3 **Ultra-Violet Light Source.**

2.4 **1 and 5 ml Graduated Hypodermic Syringes.**

2.5 **Steam Distillation Apparatus,** as shown in **Figure III-4**.

2.6 **Separatory Funnel, 500 ml.**

2.7 **Aluminum Foil Dish,** 58 mm diameter x 10 mm high with flat bottom

2.8 **Gas Chromatograph.** This unit is equipped with a compatible recorder and flame ionization detector.

2.9 **Vari-whirl Mixer.**

3) REAGENTS

3.1 **Silica Gel, 100 to 200 mesh, Grade 923.** This is available from Davison Chemical, Baltimore, Maryland (Davison Code No. 923-08-08220). Before use, dry the gel at 350°F for 3 hours; transfer and store in a desiccator.

3.2 **Fluorescent Indicator Dyed Gel.** This is available from U.O.P. Process Division, U.O.P., Inc. Des Plaines, Ill. 60016 **(U.O.P. Product No. 675)**.

3.3 **Isopropyl Alcohol**

3.4 **Pressurized Gas,** cylinder nitrogen or air.

3.5 **Analytical Columns used in Solvent Analyses are:**

3.5.1 14' x 1/8" 10% Carbowax 20 M/Chromosorb W AW DCMS, 80 to 100 mesh.

3.5.2 15' x 1/8" 10% 1,2,3 Tris **(2-cyano-ethoxy)** propane/Chromosorb W, 60 to 80 mesh.

3.5.3 15' x 1/8" x 10% N N bis **(2 cyano-ethyl)** formamide/Chromosorb W, 60 to 80 mesh.

3.6 **Rhodamine B Solution.** Rhodamine B base **(DuPont Inc.)** is prepared by dissolving 400 mg of solid in 10 ml of 200 proof ethyl alcohol

3.7 N-Butyl Amine.

3.8 Carbon Disulfide

3.9 Standards for Fluorescent Indicator Analysis (FIA) and Modified Fluorescent Indicator Analysis.

3.9.1 Equal volumes of isooctane, heptene and xylene, or appropriate substitutes. Prepare prior to use.

3.9.2 Equal volumes of isooctane, methyl ethyl ketone and xylene or appropriate substitutes. Prepare prior to use.

3.10 85% Sulfuric Acid. To 12 ml of distilled water, slowly add 88 ml of concentrated sulfuric acid.

3.11 Sulfonation Acid. Add the content of 1 lb **(454 g)** bottle of P_2O_5 to 575 ± 5 ml of fuming sulfuric acid in an Erlenmeyer flask. Stir with a glass rod or mechanical stirrer until only a small amount of residue remains, cover with a watch glass while the mixture cools to room temperature. Decant the acid mixture into ground glass stoppered bottles. Store the acid mixture in a desiccator. Prepare the reagent as rapidly as possible to minimize absorption of moisture from the air during the preparation.

4) ANALYTICAL PROCEDURE

4.1 Determination of Volatile Content of Coatings.

4.1.1 Weigh accurately 0.4 to 0.6 g **(± 0.0001 g)** of coating in a pre-weighed aluminum dish. Dry the sample in the oven at 105°C ± 5°C for one hour. Cool the sample in the desiccator and weigh. Analyze the samples in duplicate. Results should agree to within ± 5% of the mean.

4.2 Calculations.

4.2.1 Wt. Coating = Wt. aluminum dish with paint - Wt. aluminum dish.

4.2.2 Wt. Solid = Wt. aluminum dish with solid - Wt. aluminum dish.

4.2.3

$$\% \text{ Solid in Paint} = \frac{\text{Wt. Solid}}{\text{Wt. Coating}} \times 100$$

4.2.4 **% W/W Volatiles in Paint = 100% - % Solid in paint.**

4.3 Steam Distillation of Coatings.

4.3.1 Transfer approximately 50 ml of thoroughly mixed coating to a tared 125 ml Erlenmeyer flask, reweigh and determine the weight of coating. Attach the flask to the steam generator and the collection apparatus shown in **Figure III-4**.

4.3.2 Heat and control the flask temperature with an electric heating mantle at approximately 70 to 80°C and commence delivery of steam to the flask. Collect a minimum of 200 ml of distillate.

4.3.3 Separate the hydrocarbon layer from the water layer by means of a separatory funnel. Record the volumes of both fractions and weight of the hydrocarbon fraction **(± 0.1 g)**. When oxygenates are not present, the weight of collected hydrocarbon layer must be within 10% of the expected weight determined by **4.2.4**. The water layer is discarded. If oxygenated hydrocarbons are present, the weight of the immiscible hydrocarbon layer is added to the weight of miscible oxygenated hydrocarbons found in the water layer which is determined by gas chromatography, as described in **4.11.** The combined weight of the immiscible hydrocarbon layer and the total miscible oxygenates in the water must be within 10% of the expected weight determined by **4.2.4.**

4.3.4 For further processing, the immiscible hydrocarbon layer is dried by the addition of a few grams of anhydrous sodium sulfate.

4.4 Fluorescent Indicator Analysis (FIA) for Solvents and Hydrocarbon Fractions of Distillates not Containing Oxygenated Hydrocarbons.

4.4.1 Referring to **Figure III-3**, freely suspend the column. While vibrating the column along its entire length, add small increments of silica gel through a funnel until the column is 3/4 full. Stop the vibrator and add 3 to 5 mm layer of Fluorescent Indicator Dyed Gel. Start the vibrator and vibrate the column while adding additional silica gel. Continue to add the silica gel until it is tightly packed and extends 75 mm into the charger section.

4.4.2 Attach the filled column to the apparatus assembly. Chill the sample and the hypodermic syringe to 35 to 40°F. Draw 0.75 ml sample into the syringe and inject the sample 30 mm below the surface of the silica gel into the charger section.

4.4.3 Fill the charger section with isopropyl alcohol and connect the column to the gas manifold. Apply 40 to 80 mm Hg pressure for several minutes to move the liquid front down the column. Adjust the pressure to give a transit time of approximately one hour.

4.4.4 Before commencing to read the zone boundaries, carefully wipe the side of the column with a cloth dampened with ethyl alcohol and avoid handling the column with bare hands thereafter.

4.4.5 After the red aromatic boundary has advanced about 50 mm into the analyzer section, make a set of readings by quickly marking the boundary of each hydrocarbon type observed in ultraviolet light in the following sequence. For the non-fluorescent saturate zone, mark the front of the charge and the point where the yellow fluorescence first reaches its maximum intensity; for the upper end of the second or olefin zone, mark the point where the first intense blue fluorescence occurs; finally for the upper third or aromatic zone, mark the upper end of the reddish or brown zone. With colorless distillates, the alcohol-aromatic boundary is clearly defined by a red ring of the dye. When the sample has advanced about an additional 50 mm down the column, make a second set of readings and continue the reading until the zone lengths are constant. On completion, release the gas pressure and disconnect the column.

4.4.6 A standard solution prepared as in **3.9.1** should be run with each set of analyses performed.

4.5 Calculations

For each set of observations, calculate the % V/V of each hydrocarbon type to the nearest 0.1% as follows:

$$L_t = L_s + L_o + L_a$$

Where:

L_t = **Total length of the hydrocarbon zone**
L_s = **Total length of the saturate zone**
L_o = **Total length of the olefin zone**
L_a = **Total length of the aromatic zone**

$$\text{\% V/V Saturates} = \frac{L_s}{L_t} \times 100$$

$$\% \text{ V/V Olefins} = \frac{L_o}{L_t} \times 100$$

$$\% \text{ V/V Aromatics} = \frac{L_a}{L_t} \times 100$$

Determine compliance with Regulation 8, Rule 4, Section 201. If definite as to non-compliance, no further analysis is required; if indefinite continue with gas chromatography **(4.8)** for specific compound identification.

4.6 Modified FIA for Solvents and Hydrocarbon Fractions of Distillates Containing Oxygenated Hydrocarbons.

4.6.1 Referring to Figure III-3, Freely suspend the column. While vibrating the column along its entire length, add small increments of silica gel through a funnel until the column is 3/4 full. Stop the vibrator and add 3 to 5 mm layer of Fluorescent Indicator Dyed Gel and 3 drops of Rhodamine B solution **(3.6)**. Vibrate the column while adding additional silica gel, continuing to add silica gel until it is tightly packed and the gel extends 75 mm into the charger section.

4.6.2 Attach the filled column to the apparatus assembly. Chill the sample and the hypodermic syringe to 35 to 40°F. Inject 0.75 ml of the sample 30 mm below the surface of the silica gel in the charger section.

4.6.3 Fill the charger with n-butyl amine and connect the column to the gas manifold; apply a pressure of 40 to 80 mm Hg. Higher pressure can result in poor boundary definitions. Adjust the pressure to give a transit time of approximately one hour.

4.6.4 Before commencing to read the zone boundaries, carefully wipe the side of the column with a cloth dampened with ethyl alcohol and avoid handling the column with bare hands thereafter.

4.6.5 After the fluorescent orange oxygenated bydrocarbon boundary of the sample has advanced about 50 mm into the analyzer section, make a set of readings by quickly marking the boundary of each hydrocarbon type observed in ultra-violet light in the following sequence. The leading saturate section is colorless; the aromatic section is blue throughout. The aromatic saturate section is taken as the point where the blue fluorescence first reaches its maximum intensity, usually

split by a yellow-blue band. The upper aromatic boundary is marked by a red or brown zone which is readily observed in ordinary light and is included in the aromatic portion. The oxygenated compounds are colorless and extend from the brown section at the top of the aromatic section, to the top of the bright orange fluorescence marking the boundary of the oxygenated compounds. When the sample has advanced an additional 50 mm down the column, a second set of readings are made. Continue the readings until the relative zone lengths are constant. On completion, release the gas pressure and disconnect the column.

4.6.6 A standard solution prepared as in 3.9.2 is run with each set of analyses performed.

4.7 Calculations

For each set of observations calculate to the nearest 0.1% of the hydrocarbon type as follows:

$$L_t = L_s + L_a + L_{ox}$$

Where:

L_t = **Total length of the hydrocarbon zone**
L_s = **Total length of the saturate zone**
L_a = **Total length of the aromatic zone**
L_{ox} = **Total length of the oxygenated zone**

$$\text{\% V/V Saturates} = \frac{L_s}{L_t} \times 100$$

$$\text{\% V/V Aromatics} = \frac{L_a}{L_t} \times 100$$

$$\text{\% V/V Oxygenated Hydrocarbon} = \frac{L_{ox}}{L_t} \times 100$$

4.7.1 For solvents, determine compliance with Reg. **8-4-201**. If definite as to non-compliance, no further analysis is required; if indefinite, continue with gas chromatography **(4.8)** for specific compound identification.

4.7.2 For coating distillates, the modified FIA values calculated in **4.7** must be corrected for the volume of oxygenated hydrocarbons found in the water layer **(4.11)** as follows:

1) **Corrected FIA Saturates** $= \dfrac{V_{hl} \times (L_s / L_t \times 100)}{V_{hl} + V_{sd}}$

2) **Corrected FIA Aromatics** $= \dfrac{V_{hl} \times (L_a / L_t \times 100)}{V_{hl} + V_{sd}}$

3) **Corrected FIA Oxygenates** $= \dfrac{V_{hl} \times (L_{ox} / L_t \times 100) + V_{sd}}{V_{hl} + V_{sd}}$

Where: V_{hl} = **Volume of the hydrocarbon layer from the steam distillation**

V_{sd} = **Volume of water soluble oxygenates as calculated in 4.12.2**

Determination is now made for compliance. If definite as to non-compliance, no further analysis is required; if indefinite, continue with gas chromatography **(4.8)** for specific compound identification.

4.8 Gas Chromatographic Analysis of Solvents and the Hydrocarbon Layer of the Steam Distillation.

4.8.1 The selection of the proper analytical column(s) to be used should be based on the FIA using the following criteria:

4.8.1.1 If aromatics and high boiling oxygenates are reported as being present in the sample the Carbowax 20M column is recommended. Columns described in **3.5.2** and **3.5.3** are not recommended where high boilers are present or suspected.

4.8.1.2 If solvent contains only paraffins **(olefins are rarely if ever present in solvents)** and aromatics all three columns in Section 5 are adequate. All specified columns have the capability of separating C_9 to C_{11} paraffins and olefins from toluene.

4.8.2 Prepare a 2 to 5% V/V **(± 0.01%)** solution of the solvent or hydrocarbon distillate in carbon disulfide. Calculate the dilution factor.

4.8.3 Inject 2.0 μl of the diluted sample in a gas chromatograph containing one of the specified columns in Section **3.5**, using the general criteria outlined in **4.8.1**. Due to the complex mixtures used in solvents there will be many cases of overlapping peaks and complete masking of some compounds. Retain the chromatogram.

4.8.4 If oxygenates are present transfer 2 to 3 ml of the diluted sample **(4.8.2)** to a 10 ml test tube. Add approximately 3 ml of 85% sulfuric acid, cap well remove from ice and mix thoroughly by use of a Vari-whirl mixer for 30 to 40 seconds. Let the sample settle for a few minutes. All the oxygenated compounds will have been sulfonated and selectively absorbed in the acid layer leaving only the hydrocarbons and aromatics in the carbon disulfide.

4.8.4.1 Inject 2.0 μl of the sample now containing only paraffins and aromatics in the gas chromatograph. Retain the chromatogram.

4.8.5 To another 10 ml test tube, repeat steps in Section **4.8.4**, substituting sulfonation acid in place of the 85% sulfuric acid. All the aromatics and oxygenated hydrocarbons will have been sulfonated and selectively absorbed in the acid layer.

4.8.5.1 Inject 2.0 μl of the sample now containing only paraffins in the gas chromatograph. Retain the chromatogram.

4.8.6 Prepared standards are run with each set of samples. These standards are diluted with carbon disulfide, as are samples, and normally are prepared to contain C_6 to C_{12} aliphatics, C_7 to C_{12} aromatics, and a variety of commonly encountered ketones, esters and alcohols. The standards are prepared on a V/V basis (μl/ml for ready calculation on a volume percent required by the regulation).

4.9 Calculations

Having the retention times and concentrations of specific compounds derived from the prepared standards the comparisons may now be made of the sample chromatograms obtained in **4.8.3**, **4.8.4.1**, **4.8.5.1** and **4.8.6**.

4.9.1 Specific Oxygenates are identified and quantified by comparing the chromatograms derived in **4.8.3** and **4.8.4.1.** The "disappearance" of peaks in **4.8.4.1** found in **4.8.3** identifies oxygenated compounds. The retention time is then matched to the oxygenated standards run in **4.8.6** and quantified by the peak area technique as follows:

$$\text{Total \% V/V of each individual oxygenate found} = \frac{(\text{Conc.of Std } \mu\text{l/ml})\ (\text{Peak Height of Samp.})\ (\text{Dil.Factor}^{*})\ (100)}{(\text{Peak Area of Std})\ (1000)}$$

*** As found in 4.8.2**

4.9.2 Specific Aromatics are identified and quantified by comparing the chromatograms derived in **4.8.4.1** and **4.8.5.1**. Since the aromatics are found in the same retention time frame as many of the oxygenates, comparison of **4.8.4.1** (which has oxygenates selectively removed) and "disappearance" of peaks in **4.8.5.1** (which has both the oxygenates and aromatics removed) will identify the aromatic compounds. The compounds are then quantified and specifically identified by comparing to the standards run in **4.8.6** as follows:

$$\text{Total \% V/V of each individual aromatic found} = \frac{(\text{Conc.of Std } \mu\text{l/ml})\ (\text{Peak Height of Samp.})\ (\text{Dil.Factor}^{*})\ (100)}{(\text{Peak Height of Std})\ (1000)}$$

*** As found in 4.8.2**

4.10 Compliance with the regulation is determined by calculation and summation of the volume percent of the applicable compounds found in **4.9.1** and **4.9.2** as described in the regulation

In the case of coatings, which are steam distilled and contain water soluble oxygenates, these oxygenates **(4.11)** must be added to the total volume of the sample for calculating the volume percents.

4.11 Gas Chromatographic Analysis of the Oxygenated Hydrocarbons in the Water Layer of Steam Distillation of Coatings.

It is necessary to identify and quantify the miscible oxygenated hydrocarbons in the water layer of steam distilled coatings, so that corrections may be made to the FIA **(4.7)** and gas chromatographic data **(4.10)** for compliance purposes.

4.11.1 The Carbowax 20 M column described in Section **3.5** is the most appropriate when analyzing water mixtures.

4.11.2 Inject 2.0 μl of the water layer of the distillate from **4.3** in a gas chromatograph, containing a Carbowax 20 M analytical column. Retain the chromatogram.

4.11.3 A standard containing the normally encountered oxygenates, is prepared in distilled water **(μl/ml)**. Inject 2.0 μl of the standard and record the retention times and peak heights. Retain the chromatogram for future reference.

4.12 Calculation

Compare the chromatograms of 4.11.2 and 4.11.3 to identify the specific oxygenates in the water layer of the distillate. Quantitate the individual compounds by the peak height technique.

4.12.1

$$\text{Total } \mu\text{l of an individual oxygenate found} = \frac{(\text{Conc. of Std } \mu\text{l/ml})(\text{Peak Height of Samp.})(\text{Total Vol. of Samp.})^{*}}{(\text{Peak Height of Std})}$$

*** As found in 4.3.3**

4.12.2 Total μl of Oxygenates = Summation of individual oxygenates found

5) REFERENCE

5.1 Mac Phee, R., et al, "**Recommended Test Methods for Organic Solvents and Vapors (Rule 66)**", Technical Services Division Report, April 1968, Los Angeles County Air Pollution Control District.

5.2 Ellis, W.H. and Le Tourneau, R.F., "**Analysis of Lacquer Thinner by Fluorescent Indicator Absorption Method**" Anal. Chem. 25, 1269-1270, 1953.

5.3 "**Hydrocarbon Types in Liquid Petroleum Products**" Fluorescent Indicator Absorption (FIA) Method ASTM Designation D 1319-58, Book of ASTM Standards of Petroleum Products and Lubricants, 761-767, 1959.

5.4 Esposito, G.G., "**Application of Gas Chromatography to the Analysis of Organic Coatings**", Facts and Methods for Scientific Research, F & M Scientific Corp., 4, 1, 1963.

5.5 Esposito G.G., et al, "**Quantitative Measurements of Photochemically Reactive Aromatic Hydrocarbons in Enamels and Thinners**", Journal of Paint Tech., JPTYA, 40, 214 1968

ANALYTICAL SCHEME FOR SOLVENTS

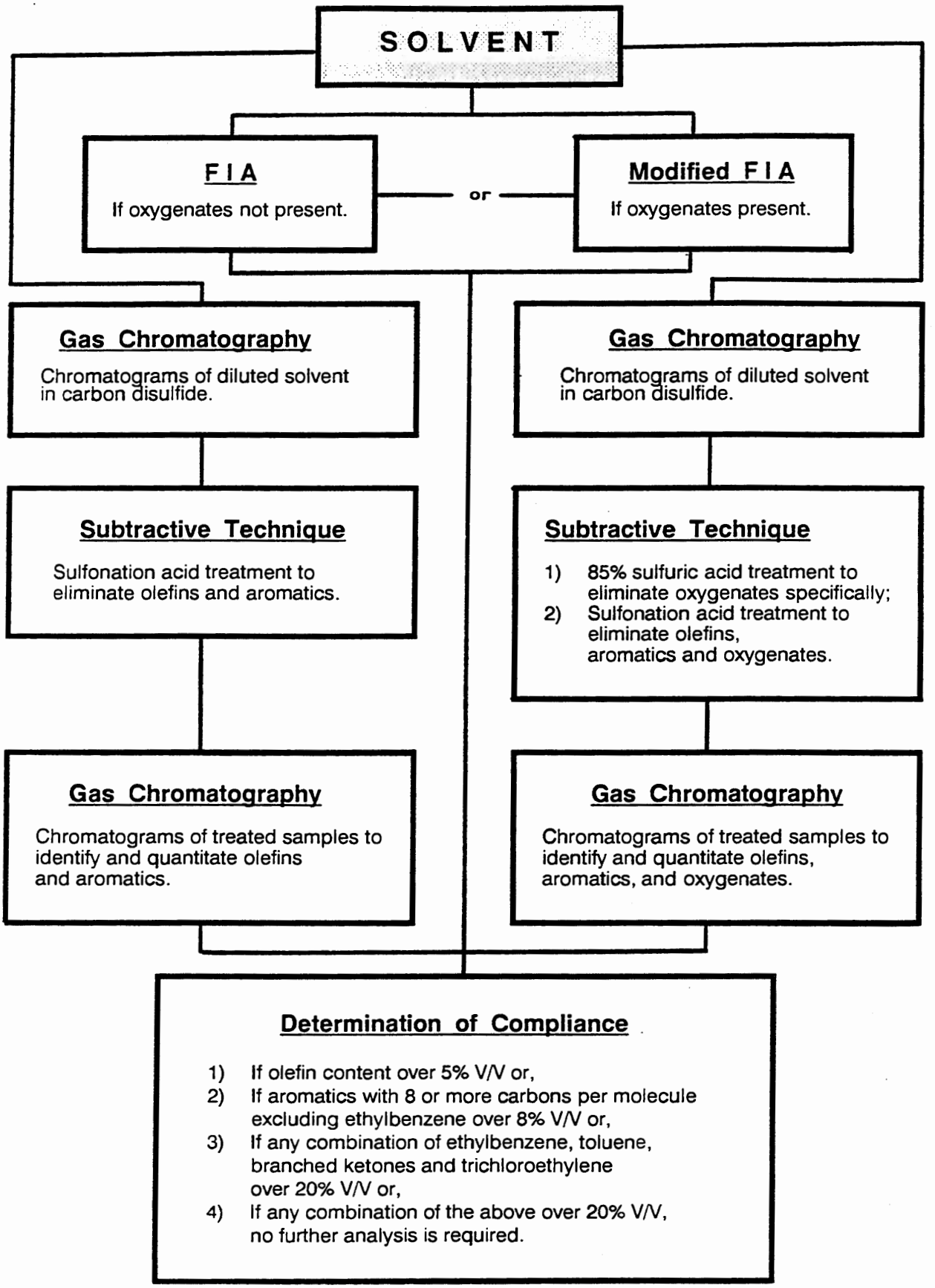

Fig. III-1

ANALYTICAL SCHEME FOR COATINGS

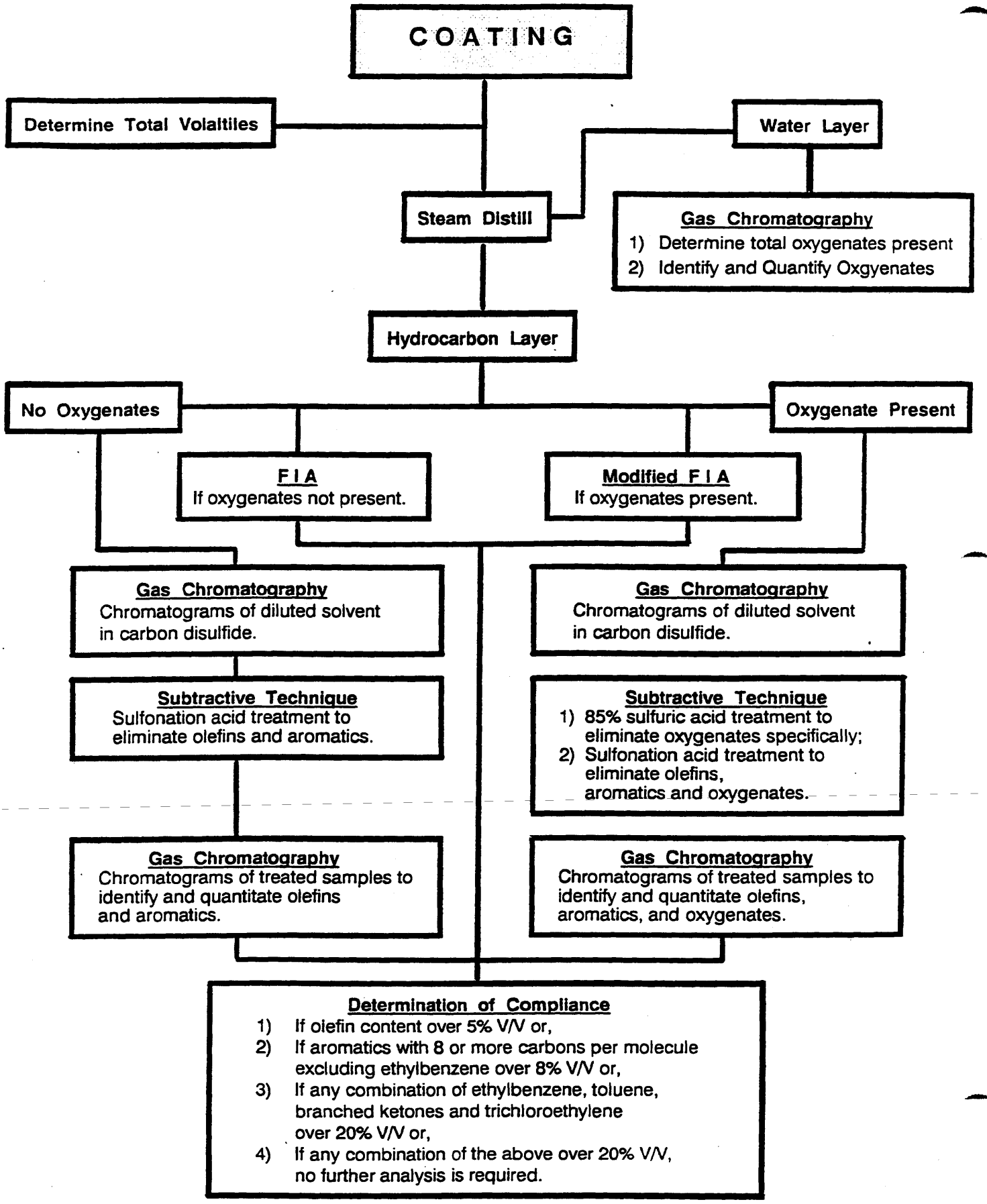

Fig. III-2

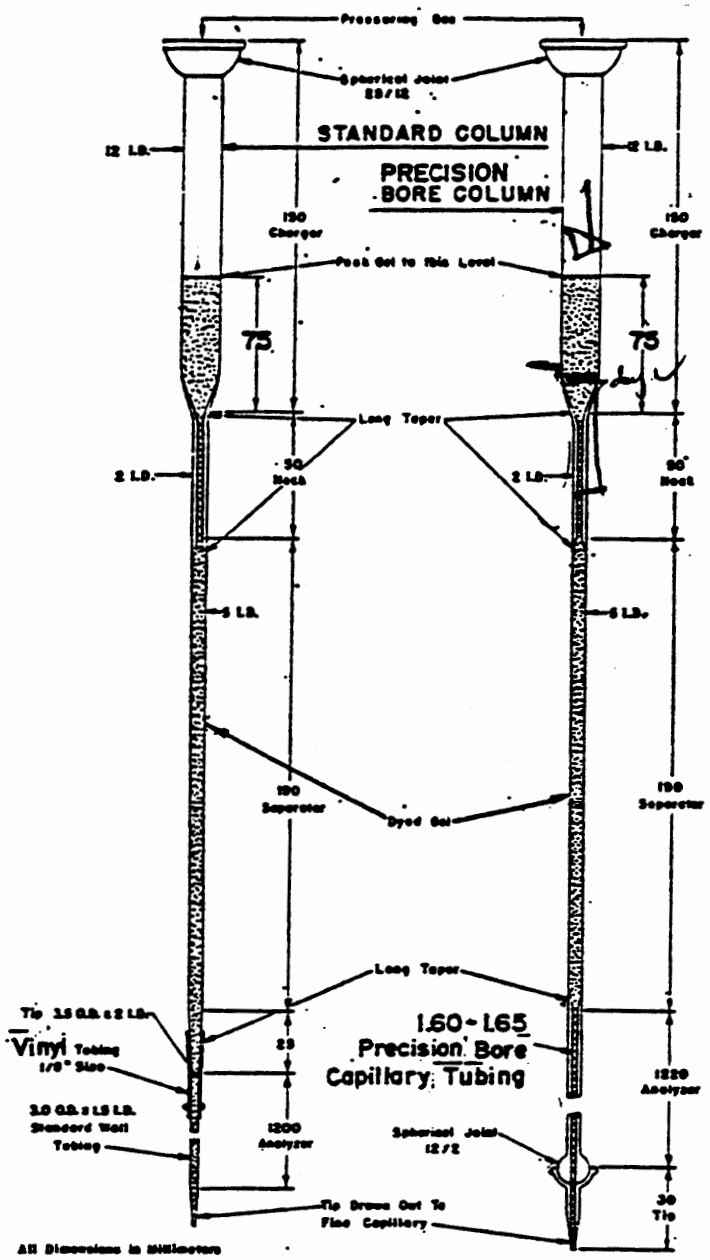

FIG. III-3

FIA APPARATUS

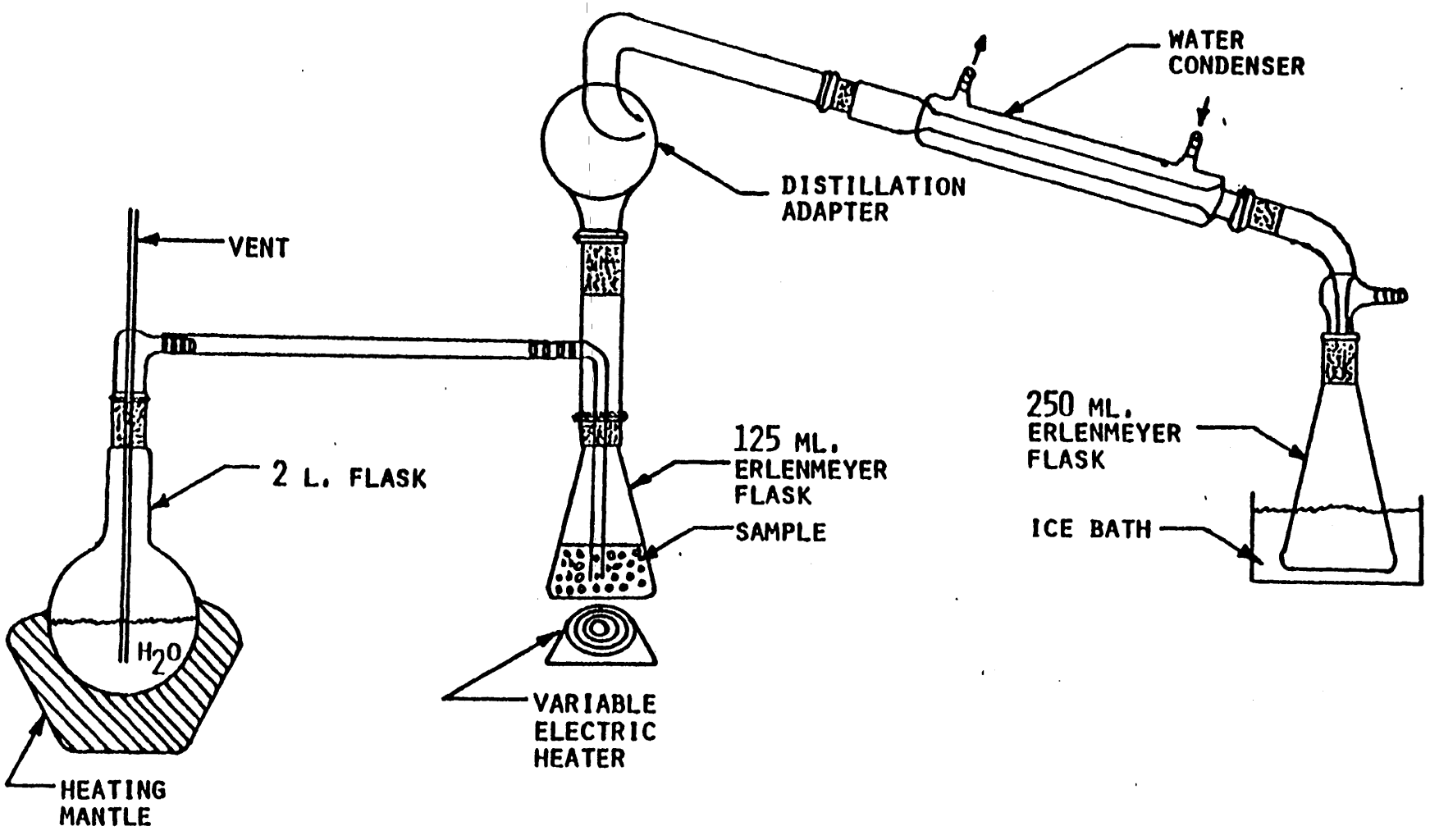

FIG. III-4

STEAM DISTILLATION APPARATUS