RECEIVED
OCT 25 2011
ENVIRONMENTAL PROTECTION

DEPARTMENT OF THE ARMY
HAWTHORNE ARMY DEPOT

SEPTEMBER 2011

Application
for
Minor Revision of a
Class I Air Quality
Operating Permit

GENERAL COMPANY INFORMATION

All applicants shall complete each item or explain in the space provided why no information is needed. Please specify "N/A" (Not Applicable) if necessary. The application will be returned to the applicant if it is deemed incomplete.

1. **COMPANY NAME AND ADDRESS THAT ARE TO APPEAR ON THE OPERATING PERMIT** [NAC 445B.295.1]:

Department of the Army, Hawthorne Army Depot
(Name)

1 South Maine Avenue
(Address)

Hawthorne — Nevada — 89415-5000
(City) (State) (Zip Code)

2. Owner's Name and Address [NAC 445B.295.1]:

Same
(Name)

(Address)

(City) (State) (Zip Code)

3. Source Name and Mailing Address, if different from #1 [NAC 445B.295.1]:

Same
(Name)

(Address)

(City) (State) (Zip Code)

4. Name and Address of Owner's Agent [NAC 445B.295.1]

Day and Zimmermann Hawthorne Corporation/SOC LLC Hawthorne, Contractor Operator
(Name)

2 South Maine Avenue
(Address)

Hawthorne — Nevada — 89415
(City) (State) (Zip Code)

5. Physical Location of Stationary Source [NAC 445B.295.8]: (if no physical address, describe location, e.g., 4 miles south of I-80 at xx Interchange)

U.S. Route 95 North

One mile north of Hawthorne, Nevada

Township(s) 8 North Range(s) 30 East Section(s) 17

GENERAL COMPANY INFORMATION (CONTINUED)

6. Plant Manager or Other Appropriate Contact [NAC 445B.295.1]:

Cliff Cichowlaz — General Manager
(Name) (Title)

2 South Maine Avenue
(Address)

Hawthorne — Nevada — 89415
(City) (State) (Zip Code)

775-945-7001 — 775-945-7948 —
(Telephone #) (FAX #) (E-mail address)

7. Responsible Official Name, Title and Address [NAC 445B.295.1]:

Lt. Commander William C. Johnson Jr. — Commander, HWAD
(Name) (Title)

1 South Maine Avenue
(Address)

Hawthorne — Nevada — 89415-5000
(City) (State) (Zip Code)

775-945-7000 — 775-945-7948 —
(Telephone #) (FAX #) (E-mail address)

8. If records required under the operating permit will be kept at a location other than the source, specify that location [NAC 445B.295.7].

Environmental Offices of Day and Zimmermann Hawthorne Corporation/SOC LLC Hawthorne
(Name)

2 South Maine Avenue
(Address)

Hawthorne — Nevada — 89415
(City) (State) (Zip Code)

9. This application is submitted for (please check appropriate boxes below):

☐ This application is for a source subject to PSD requirements (40 CFR § 52.21).
☐ This application is for a source subject to the following NSPS requirements (40 CFR § 60):

☐ This application is for a source subject to the following NESHAP requirements (40 CFR § 63):

10. The application must contain, if applicable:
   a. For a proposed minor revision for which there is an increase of greater than 10 tons per year of a regulated air pollutant, include an environmental evaluation as required by NAC 445B.308 to 445B.313, inclusive [NAC 445B.295.8].
   b. For stationary sources subject to the provisions regarding new source review set forth in 42 USC §§7501 - 7515, inclusive (nonattainment areas), all information required by 42 USC §7503 [NAC 445B.3363.2(b)(3)].

COMPLIANCE CERTIFICATION
NAC 445B.3368.2(h)
DEPARTMENT OF THE ARMY
HAWTHORNE ARMY DEPOT

I certify that to the best of my knowledge the Hawthorne Army Depot is:

(1) Operating in compliance with all applicable requirements.
(2) Will continue to comply with all applicable requirements; and
(3) Will comply in a timely manner with any new applicable requirements that become effective during the operating permit term.

William C Johnson Jr.
Signature of Responsible Official

Print or Type Name and Title

14 DEC 2011 — THIS WAS NOT IN ORIGINAL PACKET
Date

William C. Johnson, Jr.
Lieutenant Colonel, US Army
Commanding

11. Will the construction occur in more than one phase? ☐ Yes ☒ No

12. If the construction will occur in more than one phase, please provide the projected date of the commencement for each phase of construction:
    Phase 1: _____
    Phase 2: _____
    Phase 3: _____

13. Compliance Plan/Certification
    a. Attach a compliance plan, signed by the responsible official, that contains the following with respect to all applicable requirements:
        (1) A narrative description of the compliance status of the stationary source with respect to all applicable requirements. [NAC 445B.3368.2(h)(1)]
        (2) A compliance certification by a responsible official stating that the stationary source will comply in a timely manner with any new applicable requirements that become effective during the operating permit term. Include a description of the test methods and the requirements for monitoring, enhanced monitoring, recordkeeping and reporting that will be used to comply with the new applicable requirements, fuel use, the rate of production, raw materials, and operating schedules which are used to determine the compliance status of the stationary source. [NAC 445B.3368.2(h)(2)]
        (3) If the stationary source is not in compliance with any applicable requirements at the time the operating permit is issued, include a narrative description and a proposed schedule for achieving compliance which includes remedial measures, an enforceable sequence of actions with milestones, and a schedule to submit certified progress reports every six months. This schedule must be at least as stringent as that contained in any consent decree rendered by a federal court, a court of this state, or an administrative order which applies to the stationary source. [NAC 445B.3368.2(h)(3))III)]
    b. A schedule for submission of compliance certifications during the term of the operating permit, to be submitted annually or more frequently to the Bureau of Air Pollution Control. [NAC 445B.3368.2(i)(3)]

14. A minor revision may be made to a Class I operating permit if the revision:
    a. Does not violate any applicable requirement;
    b. Does not involve significant changes to the existing requirements for monitoring, reporting or recordkeeping;
    c. Does not require or change:
        (1) A determination of an emission limitation or other standard on a case-by-case basis;
        (2) A determination of the ambient impact for any temporary source; or
        (3) A visibility or increment analysis;
    d. Does not establish or change a conditionof the operating permit for which there is no corresponding underlying applicable requirement and which was requested in order to avoid an applicable requirement, including:
        (1) A federally enforceable emissions cap; or
        (2) An alternative emission limitation pursuant to 42 U.S.C. §7412(i)(5);
    e. Is not a modification pursuant to any provision of 42 U.S.C. §§7401 to 7515, inclusive; and
    f. Does not result in an increase in allowable emissions that exceeds any of the thresholds specified in NAC 445B.3425.1(f).

15. **PROCEDURES FOR DEMONSTRATION OF MINOR REVISION AT A MAJOR PSD STATIONARY SOURCE.** Respond to the following criteria [NAC 445B.295.8]:

    a. Is the existing facility categorized as a PSD major stationary source (see 40 CFR Part 52.21(b)(1) for definition)? This determination must be based on the potential to emit as determined by the conditions contained in current permit(s). If the existing facility is not a PSD major stationary source, b and c are not required to be completed.
    b. Describe whether a physical change or change in the method of operation is occurring as a result of the proposed revision(s). If a physical change or change in the method of operation is not occurring, c is not required to be completed.
    c. Describe and provide detailed calculations that demonstrate that a major modification as defined in 40 CFR Part 52.21(b)(2) is not occurring. The demonstration must include, at a minimum:
        (1) A summary of actual emissions for the entire stationary source;
        (2) The proposed new potential to emit for the entire stationary source;
        (3) A summary of any other contemporaneous emission increases and decreases; and
        (4) The net emission increase or decrease. This must be less than the PSD significant emission rates defined in 40 CFR Part 52.21(b)(23).

16. **Application Submittal:**
    Please remove the cover page, Table of Contents and General Information page and all Attachments of the application packet. Submit the remainder of the application packet as your formal application. This should consist of, at a minimum, the Class I-B Minor Revision Application cover page, the general Company Information, and Appendices 1 through 10.

Appendix 1

EMISSION UNIT APPLICATION FORMS

(Industrial Process/Combustion Equipment/Storage Silo/ Liquid Storage Tank/ Surface Area Disturbance)

INDUSTRIAL PROCESS
APPLICATION FORM
CLASS I-B MINOR REVISION

Check here if this is an alternative operating scenario

Section 1 - Equipment Description

a. Type of equipment Mercury retort, 15 cu. ft. (Battery Recycling Facility BRF-Building 104-5)

b. Standard Industrial Classification (SIC) Code 9711

c. Manufacturer of equipment Lochhead-Haggerty

d. Model number MR-15E Serial number _____ *Equip. number _____

e. Date equipment manufactured: 2008

f. Please check one: ☐ Temporary (At the same location for less than 12 months) ☒ Stationary (At the same location for more than 12 months)

g. For crushers: size output setting, check one: ☐ Primary (> 4") ☐ Secondary (< 4" but > 1") ☐ Tertiary (< 1")

h. Please check if portable: ☐ Portable (transportable or movable within the confines of the stationary source)

i. UTM Coordinates 4,265,624.30 meters N; 360,755.79 meters E; Zone 11
(Please specify NAD 27 ☐ or NAD 83 ☒)

j. Basic equipment dimensions (feet): L 13'8" W 13'6" H 11'2"

*The equipment number is the facility's own numbering system for this piece of equipment.

Section 2 - Design Rate/Operating Parameters

a. Maximum design capacity (tons per hour) N/A

b. Requested operating rate (tons per hour)* N/A

c. Requested operating time: (time of day)* 12:00 a.m. to 12:00 a.m.

Hours per day 24 Days per year 365

d. Batch load or charge weight (tons) (if applicable) 0.17

e. Total hours required to process batch or charge (if applicable) 12 to 16 hours (allows for temperature ramp up, soaking, and cooling)

f. Maximum operating rate (tons per year) 124 = 8,760 hr/yr / 12 hr/batch x 0.17 t/batch

g. Requested operating rate (tons per year)* 124

h. Type of material processed Zinc plates from Naval Undersea Warfare Equipment batteries

i. Minimum moisture content N/A

*Note: Please complete if other than the maximum design capacity (tons per hour and tons per year) and/or the maximum hours of operation (24 hours per day, 8760 hours per year) are being requested. The permit will be limited to these values.

INDUSTRIAL PROCESS
APPLICATION FORM
CONTINUED

Section 3 - Fuel Usage – N/A, powered by electricity

(This section only applies to fuel consumed/combusted within the process unit. Fuels consumed/combusted in combustion units are to be listed on the Combustion Equipment Application Form.)

Type of Fuel	Amount Used Per Hour	Heat Content (specify in Btus)	Ash Content (% by weight)	Sulfur Content (% by weight)	Trace Elements (% by weight)
Oil- Specify Type(s)					
	gallons				
	gallons				
Gasoline	gallons				
Propane	cubic feet				
Natural Gas	cubic feet				
*Waste Oil	gallons				
Other	Electricity				

Type of Fuel	Amount Used Per Hour (tons)	Heat Content (specify in Btus)	Ash Content (% by weight)	Sulfur Content (% by weight)	Trace Elements (% by weight)	Percent moisture	Percent volatile matter	Percent fixed carbon
Coal - Specify Type(s)								

If more than one type of fuel is combusted, under this operating scenario please specify primary fuel and percentage on a maximum hourly and annual basis (if fuel blending is the primary fuel, identify percentages of each fuel blended). Attach additional information to this form if necessary.

*Firing of waste oil will require multi metals test to insure fuel is non-hazardous.

INDUSTRIAL PROCESS
APPLICATION FORM
CONTINUED

Section 4 - Pollution Control Equipment/Exhaust Stack Parameters (this section *must* be completed)

-Complete for emissions **exhausting through a stack, chimney or vent**: (baghouse, wet scrubber, cyclone, low NO_x burner, no control, etc.)

	Control #1	Control #2
Type of Control (See Note 1)	Water jacketed condenser tubes, water jacketed aftercooler assembly, mist eliminator, air filter, dual sulfur impregnated coconut activated carbon columns, air/water separator	
Pollutant(s) Controlled	Mercury	
Manufacturer	Lochhead Haggerty Engineering	
Manufacturer's Guarantee (see Note 2)	<0.05 mg/m^3	
Stack height (feet from ground level)	16	
Stack inside diameter (feet)	0.125 (1.5 inches)	
Temperature (°F) at design capacity	Maximum of 140°F	
Stack exit velocity (feet per second)	20.37 – 54.33	
Gas volume flow rate: Actual cubic feet per minute	15 - 40	
Gas volume flow rate: Dry standard cubic feet per minute		
Unusual stack characteristics (e.g. raincap, horizontal discharge)		

-Complete for emissions **not** exhausting through a stack, chimney or vent: (water sprays, fogging water sprays, pneumatic fogging system, high moisture ore, no control, etc.)

	Control #1	Control #2
Type of Control (See Note 1)		
Pollutant(s) Controlled		
Manufacturer		
Manufacturer's Guarantee (see Note 1)		

Note: Indicate the specific point(s) of emission control application for this emission unit. This must be provided as part of the process flow diagram as required in section 7 of the General Information section of the application form.

Note 1: Specify "uncontrolled" if no pollution control device is installed.

Note 2: Manufacturer's guarantee of control efficiency must be attached to this form if the control efficiency claimed is greater than the control efficiency ratings provided in the Bureau of Air Pollution Control's Emissions Control Technology - Control Efficiency Ratings provided in Attachment 4.

INDUSTRIAL PROCESS
APPLICATION FORM
CONTINUED

Section 5 - Identify and Describe Compliance Monitoring Devices or Activities (attach additional pages if necessary)

Emissions from the unit will be monitored with a mercury vapor meter.

The Monitoring and Recordkeeping practices will include:
i. Monitor the daily hours of operation.
ii. Monitor the daily throughput rate of zinc plates in pounds.
iii. Monitor the inlet water temperature of the Condenser during each day of operation.
iv. Monitor the water flow rate of the Condenser during each day of operation.
v. Monitor the dates of carbon replacement in the Carbon Adsorption Unit.
vi. Monitor the amount of carbon replaced in the Carbon Adsorption Unit in pounds during carbon replacement.
vii. Monitor the dates of each mercury analysis performed on the carbon in the Carbon Adsorption Unit.
viii. Monitor for negative pressure during each day of operation
ix. The monitoring above shall be maintained in a contemporaneous log containing, at a minimum, the following recordkeeping:
(a) The calendar date of any required monitoring.
(b) The total daily hours of operation for the corresponding date.
(c) The total daily throughput rate of zinc plates in tons for the corresponding date.
(g) The inlet water temperature of the Condenser during each day of operation, for the corresponding date.
(e) The water flow rate of the Condenser during each day of operation, for the corresponding date.
(f) The dates of each carbon replacement in the Carbon Adsorption Unit for the corresponding date.
(g) The amount of carbon replaced in the Carbon Adsorption Unit in pounds for the corresponding date.
(h) The dates of each mercury analysis performed on the carbon in the Carbon Adsorption Unit for the corresponding date.
(i) The results of each mercury analysis performed on the carbon in the Carbon Adsorption Unit for the corresponding date.
(j) The corresponding average hourly throughput rate in tons per hour. The average hourly throughput rate will be determined from the total daily throughput rate (c) and the total daily hours of operation (b) above.

Section 6 - Identify and Describe Work Practice Standards, Etc. (attach additional pages if necessary

Work Practices Standards

(a) The Mercury Retort shall be kept under negative pressure during operation. If positive pressure occurs the system will be shut off.

Condenser:

(b) The water inlet temperature shall be maintained at or below 100°F during operation.

(c) The water flow rate shall be maintained at or above 8.0 gallons per minute during operation.

Carbon Adsorption Unit:

(d) The **Carbon Adsorption Unit** shall contain sulfur impregnated carbon.

(e) The **Carbon Adsorption Unit** shall contain at a minimum 200 pounds of sulfur impregnated carbon at all times during operation.

(f) After 3,060 hours of operation the following will occur:

i. Replacing the carbon in the carbon bed, or

ii. Performing an analysis on the sulfur impregnated carbon to ensure the carbon is replaced prior to exceeding the maximum mercury loading.

Condensation Vessel:

Mercury will be collected from the condensation vessel following each retort run.

Exhaust Gas Temperature

The exhaust gas temperature will be maintained at less than 140 degrees Fahrenheit

Shut Off Conditions

If any monitored parameters exceed the manufacturer's specifications (see O&M manual) the system will be shut off. Also if positive pressure occurs or the condenser parameters don't meet the specifications above.

Nevada
Environmental Protection
JAN 20 2012
BAPC/BAQP

INDUSTRIAL PROCESS APPLICATION FORM CONTINUED

JAN 20 2012
Environmental Protection
BAPC/BAQP

Section 7 - Requested Emission Limits

Pollutant	Potential to Emit (pounds/hour*)	Potential to Emit (tons/year)	Calculation (including reference) on Which Emissions Information is Based (attach supporting information if necessary)
Total Particulate Matter (PM)			
Particulates as PM_{10}			
Sulfur Dioxide			
Carbon Monoxide			
Oxides of Nitrogen			
Volatile Organic Compounds			
Lead			
Hydrogen Sulfide			
Hazardous Air Pollutants (Specify Each Pollutant[1])			
Mercury	0.004762 lb/hr 12 hr batch 0.057 lb/batch 0.057144	0.021	2700 zinc plates *48 g/plate *0.02% mercury/plate = 2592 g/batch. 2592 g/batch / 453.59 g/lb = 5.71 lb/batch * 0.01 efficiency = 0.057 lb/batch. 0.057 lb/batch * 730 batches/yr * 1 ton/2000 lb = 0.021 ton/yr
Other Regulated Pollutants (Specify[2])			

*Note: Alternative emissions limitations (e.g., lb/MMBtu, ppm, grains/dscf) may be requested by the applicant. If alternative emissions limitations are requested, please clearly describe the units in column 2 of Section 5 above.

[1]A list of Hazardous Air Pollutants is contained in Attachment 4.

[2]Other Regulated Pollutants include any Class I or Class II substance subject to a standard adopted pursuant to 42 U.S.C. SS 7671-8671q, inclusive.

SECTION 8
EMISSION UNIT SPECIFIC APPLICABLE REQUIREMENTS

SECTION 8
EMISSION UNIT SPECIFIC
APPLICABLE REQUIREMENTS, TEST METHODS, AND COMPLIANCE STATUS

Applicable Requirement Citation and Description	Explanation of A Proposed Exemption	Test Methods and/or Monitoring	Compliance Status
NAC 445B.2203 *(State Only Requirement)* **Emissions of Particulate Matter - Fuel Burning Equipment** 1. Source may not cause or permit the emission of PM_{10} resulting from the combustion of fuel in fuel-burning equipment in excess of the quantity set forth in the following formulas: a. For input of heat equal to or greater than 4 million Btu's per hour, but less than or equal to 10 million Btu's per hour, the allowable emission is 0.6 of a pound per million Btu's of input of heat. b. For input of heat greater than 10 million Btu's per hour, but less than 4,000 million Btu's per hour, the allowable emissions must be calculated using the following equation: $Y = 1.02X^{-0.231}$ c. For input of heat equal to or greater than 4,000 million Btu's per hour, the emission must be calculated using the following equation: $Y = 17.0X^{-0.568}$ 2. For the purposes of paragraphs b and c of subsection 1: a. "X" means the operating rate in million Btu's per hour. b. "Y" means the allowable rate of emission in pounds per million Btu's.	Retort is not fuel burning equipment		
SIP 445.731(1)(a) - *(Federally Enforceable SIP Requirement)* **Particulate Matter - Fuel Burning Equipment** Source shall not cause, suffer, allow or permit the emission of particulate matter resulting from the combustion of fuel in excess of the quantity set forth in the following table: Heat input in millions of — Maximum allowable emission of particulate matter in pounds per hour per million Up to and including 10 . . . . . 0.600 100. . . . . 0.352 1,000. . . . . 0.206 10,000. . . . . 0.091 100,000. . . . . 0.025	Retort is not fuel burning equipment		
SIP 445.731(1)(b) - *(Federally Enforceable SIP Requirement)* **Particulate Matter - Fuel Burning Equipment** For heat inputs greater than 10 but less than 4,000 million Btu's per hour, the allowable emissions shall be calculated by using the following equation: $Y = 1.02X^{-0.231}$ Where "X" = maximum equipment capacity rate in million Btu's per hour. "Y" = allowable rate of emission in pounds per million Btu's.	Retort is not fuel burning equipment		

SECTION 8
EMISSION UNIT SPECIFIC
APPLICABLE REQUIREMENTS, TEST METHODS, AND COMPLIANCE STATUS

Applicable Requirement Citation and Description	Explanation of A Proposed Exemption	Test Methods and/or Monitoring	Compliance Status
SIP 445.731(1)(c) - *(Federally Enforceable SIP Requirement)* **Particulate Matter - Fuel Burning Equipment** For heat inputs equal to or greater than 4,000 million Btu's per hour, the emissions shall be calculated by using the following equation: $Y = 17.0X^{-0.568}$ where "X" = maximum equipment capacity rate in million Btu's per hour, "Y" = allowable rate of emission in pounds per million Btu's.	Retort is not fuel burning equipment		
SIP 445.731(3) - *(Federally Enforceable SIP Requirement)* **Particulate Matter - Fuel Burning Equipment** Air conditioning equipment or fuel burning equipment having a rating of less than one million kilogram-calories (4 million Btu's) per hour shall be exempted from provisions of this section.	Retort is not fuel burning equipment		
NAC 445B.22033, 445B.22027 *(State Only Requirement)* **Emissions of Particulate Matter - Sources Not Otherwise Limited** 1. Owners or operators of stationary sources not otherwise included in NAC 445B.22027 to 445B.22037, inclusive, shall not cause or permit PM_{10} to be discharged from any emission unit into the atmosphere in excess of the allowable emission determined by the use of the formula contained in subsection 2 or 3. 2. When the maximum allowable throughput is less than 30 tons per hour, the maximum allowable weight discharge per hour must be determined by using the following equation: $E = 4.10P^{0.67}$ 3. When the maximum allowable throughput equals or exceeds 30 tons per hour, the maximum allowable weight discharge per hour must be determined by using the following equation: $E = 55P^{0.11} - 40$ 4. For the purposes of subsections 2 and 3: (a) "E" means the maximum rate of emission in pounds per hour. (b) "P" means the maximum allowable throughput in tons per hour.	Retort does not emit particulate		
SIP 445.732 - *(Federally Enforceable SIP Requirement)* Particulate Matter - Industrial Sources Sources not otherwise included in these regulations (SIP) shall not cause, suffer, allow, or permit particulate matter to be discharged from any single source into the atmosphere in excess of the allowable emission shown in the following table. When the process weight falls between two values in the table, the maximum weight discharged per hour shall be determined by the use of the formulas contained in this section. SIP 445.732(2) - When the process weight rate is less than 30,000 kilograms (60,000 pounds) per hour, the maximum allowable weight discharged per hour will be determined by using the following equation: $E = 0.0193P^{0.67}$ $(4.10P^{0.67})$ "E" = Maximum rate of emission in kilograms (pounds) per hour, "P" = Process weight rate in kilograms (tons) per hour.	Retort does not emit particulate		

SECTION 8
EMISSION UNIT SPECIFIC
APPLICABLE REQUIREMENTS, TEST METHODS, AND COMPLIANCE STATUS

Applicable Requirement Citation and Description	Explanation of A Proposed Exemption	Test Methods and/or Monitoring	Compliance Status
SIP 445.732 (3) - *(Federally Enforceable SIP Requirement)* Particulate Matter - Industrial Sources When the process weight rate equals or exceeds 30,000 kilograms (60,000 pounds) per hour the maximum allowable discharge per hour will be determined by using the following equation: $E = 11.78P^{0.11} - 18.14\ (55P^{0.11} - 40)$ "E" = Maximum rate of emission in kilograms (pounds) per hour. "P" = Process weight rate in kilograms (tons) per hour.	Retort does not emit particulate		
NAC 445B.2204, 445B.22043, 445B.22047 *(State Only Requirement)* Sulfur Emissions - Fuel Burning Equipment 1. Source may not cause or permit the emission of compounds of sulfur caused by the combustion of fuel in fuel-burning equipment in excess of the quantity calculated by the use of the formula in subsection 2 or 3. 2. Where an emission unit has a total input of heat of less than 250 million Btu's per hour the allowable emission must be calculated by the use of the following equation: Y = 0.7X 3. Where an emission unit has a total input of heat equal to or greater than 250 million Btu's per hour, the allowable emission of sulfur must be calculated by the use of the following equation: Liquid fuel, Y = 0.4X Solid Fuel, Y = 0.6X Combination, Y = (L(0.4) + S(0.6))/(L + S) 4. For the purposes of subsections 2 and 3: (a) "X" means the operating input of heat in millions of Btu's per hour. (b) "Y" means the allowable rate of emission of sulfur in pounds per hour. 5. For the purposes of subsection 3: (a) "L" means the percentage of total input of heat derived from liquid fuel. (b) "S" means the percentage of total heat derived from solid fuel.	Retort is not fuel burning equipment		
SIP Article 8.1 and 8.2 *(Federally Enforceable SIP Requirement)* Sulfur Emissions - Fuel Burning Equipment 8.2.1.1 - Where a source located on contiguous property has a total heat input of less than 63 million kg-cal (250 million Btu's) per hour the following allowable emission shall be calculated by the use of the following equation: Y = 1.26X (Y = 0.7X) "X" = Operating heat input in millions of kg-cal (Btu's) per hour. "Y" = Allowable rate of sulfur emission in kg (pounds) per hour.	Retort is not fuel burning equipment		

SECTION 8
EMISSION UNIT SPECIFIC
APPLICABLE REQUIREMENTS, TEST METHODS, AND COMPLIANCE STATUS

Applicable Requirement Citation and Description	Explanation of A Proposed Exemption	Test Methods and/or Monitoring	Compliance Status
SIP Article 8.2.1.2 - Where a source located on contiguous property has a total heat input of equal to or greater than 63 million kg-cal (250 million Btu's) per hour, the allowable sulfur emission shall be calculated by the use of the following equations: Liquid Fuel: $Y = 0.7X$ ($Y = 0.4X$) Solid Fuels: $Y = 1.1X$ ($Y = 0.6X$) Combination Fuel: $Y = \frac{L(0.7) + S(1.1)}{L + S}$ "X" = Operating Input in millions of kg-cal (Btu's) per hour. "Y" = Allowable rate of sulfur emissions in kg (pounds) per hour. "L" = Percentage of total heat input derived from liquid fuel. "S" = Percentage of total heat input derived from solid fuel. 8.2.2 - For purposes of Article 8, "sulfur emission" means the sulfur portion of the sulfur compounds emitted.	Retort is not fuel burning equipment		
NAC 445B.2204, 445B.22043, 445B.2205 *(State Only Requirement)* Other Processes Which Emit Sulfur 1. Source may not cause or permit the emission of sulfur compounds where the sulfur originates in the material being processed, excluding hydrogen sulfide and sulfur from all solid, liquid, or gaseous fuel, in excess of the quantity determined by the following equation: $E = 0.292P^{0.904}$ 2. For the purposes of subsection 1: (a) "E" means the allowable sulfur emission in pounds per hour. (b) "P" means the total feed sulfur, excluding hydrogen sulfide, in pounds per hour.	Retort is not fuel burning equipment		
SIP 445.746 - *(Federally Enforceable SIP Requirement)* Other Sulfur Emitting Processes SIP 445.746(1) - Source shall not cause, suffer, allow or permit the emission of sulfur compounds where the sulfur originates in the material being processed (excluding sulfur from solid, liquid, or gaseous fuel), in excess of the quantity determined by the following equation: $E = 0.271P^{0.904}$ ($0.292P^{0.904}$) When (E) is equal to or greater than 5 kilograms (10 pounds) per hour. Where: "E" is the allowable sulfur emission in kilograms (pounds) per hour. "P" is the total feed sulfur in kilograms (pounds) per hour. SIP 445.746(1) - When "E" is less than 5 kilograms (10 pounds) per hour, the gas stream concentration shall not exceed 1,000 ppm by volume.	Material being processed in retort does not contain sulfur		
SIP 445.746 - *(Federally Enforceable SIP Requirement)* Other Sulfur Emitting Processes SIP 445.746(3) - When sulfur emissions are due to sulfur contributions from both the fuel and the material being	Material being processed in retort does not contain sulfur		

Applicable Requirement Citation and Description	Explanation of A Proposed Exemption	Test Methods and/or Monitoring	Compliance Status
processed, the allowable emissions shall be the sum of those allowed by the provisions of this section.		method 22	
NAC 445B.22017 *(State Only Requirement)* Maximum Opacity of Emissions 1. Except as otherwise provided in this section and NAC 445B.2202 and 445B.22023, no owner or operator may cause or permit the discharge into the atmosphere from any emission unit which is of an opacity equal to or greater than 20 percent. Opacity must be determined by one of the following methods: (a) If opacity is determined by a visual measurement, it must be determined as set forth in Reference Method 9 in Appendix A. of 40 C.F.R. Part 60. (b) If a source uses a continuous monitoring system for the measurement of opacity, the data must be reduced to 6-minute averages as set forth in 40 C.F.R. §60.13(h). 2. The provisions of this section and NAC 445B.2202 and 445B.22023 do not apply to that part of the opacity that consists of uncombined water. The burden of proof to establish the application of this exemption is upon the person seeking to come within the exemption.		Method 9 opacity readings conducted ~~every day~~ of operation once per month method 22	N/A
SIP 445.721 *(Federally Enforceable SIP Requirement)* Visible Emissions from Stationary Sources These regulations (SIP) shall not apply if the presence of uncombined water is the only reason for the failure of an emission to comply with these regulations. The burden of proof to establish the application of this exemption shall be upon the person seeking to come within this exemption.		Method 9 opacity readings conducted ~~every day of operation~~ once per month	N/A

Section 1 - List All Emission Units that are Insignificant Activities Pursuant to NAC 445B.288.2(a) through (b) (see Attachment 2 for regulation).

Emission Unit	Exemption Regulation (Example - NAC 445B.288.2(b))	Reason Exemption Applies
Battery decasing, decanning, washing and waste water treatment operations	List of Insignificant Activities Approved by the Director	

Section 2 - List All Emission Units Proposed as Insignificant Activities Pursuant to List Approved by the Director (see Attachment 1 - List of Approved Insignificant Activities)

Emission Unit	Reason Exemption Applies

Section 3 - List All Emission Units Proposed as Insignificant Activities and Not Otherwise Listed in Section 1 or Section 2 (NAC 445B.288.4). Proposed insignificant activities from this Section must be submitted, under separate cover, to the Director for his approval. The submittal must include a sufficient description of the emission unit(s), all emissions calculations, and references.

Emission Unit

Section 4 -Emissions Calculations - Insignificant Emission Units/Activities

Emissions calculations for each insignificant activity listed in Sections 1 through 3 above must be provided and included in Appendix 4. Emissions calculations must be based on the maximum design throughput, maximum design production rate or maximum design heat input rate value of the emission unit or activity. No consideration for emissions reduction from pollution controls or limits on the hours of operation or other operational constraints may be allowed unless otherwise approved by the Director or as indicated in NAC 445B.288.3 or on the list provided in Attachment 1.

Appendix 3

FACILITY-WIDE APPLICABLE REQUIREMENTS

Instructions

Complete Table 1 provided in Appendix 3. Table 1 contains the general applicable requirements for the facility. In addition provide the following:

1. List, describe and cite all specific applicable requirements as defined in NAC 445B.019 (e.g., SIP, NAC, NSPS, NESHAPS, 112(r), acid rain, stratospheric ozone, etc.). [NAC 445B.3363.1(g)]
2. Explain any proposed exemption from any specific applicable requirement. [NAC 445B.295.1(f)]
3. Describe methods for determining compliance with each specific applicable requirement. [NAC 445B.295.2(g)]

TABLE 1
APPLICABLE REQUIREMENTS, TEST METHODS, AND COMPLIANCE STATUS

Applicable Requirement Citation and Description	Explanation of A Proposed Exemption	Test Methods and/or Monitoring	Compliance Status
Nevada Revised Statute (NRS) 445B.470 *(State Only Requirement)* Prohibited Acts Source shall not knowingly: 1. Violate any applicable provision, the terms or conditions of any permit or any provision for the filing of information; 2. Fail to pay any fee; 3. Falsify any material statement, representation or certification in any notice or report; or 4. Render inaccurate any monitoring device or method, required pursuant to the provisions of NRS 445B.100 to 445B.450, inclusive, or 445B.470 to 445B.640, inclusive, or any regulation adopted pursuant to those provisions.	Not Exempt	N/A	In Compliance
NAC 445B.22013 *(State Only Requirement)* Prohibited Discharge Source shall not cause or permit the discharge into the atmosphere from any stationary source of any hazardous air pollutant or toxic regulated air pollutant that threatens the health and safety of the general public, as determined by the director.	Not Exempt	Comply with monitoring requirements under 40 CFR 63 Subpart EEE and BMP	In Compliance
NAC 445B.225 *(State Only Requirement)* Prohibited Conduct; Concealment of Emissions Source shall not install, construct, or use any device which conceals any emission without reducing the total release of regulated air pollutants to the atmosphere.	Not Exempt	N/A	In Compliance
State Implementation Plan (SIP) Article 2.2 *(Federally Enforceable State Implementation Plan (SIP) Requirement)* Circumvention 2.2.1 - Except for the sole purpose of reducing the odor of an emission, Source shall not install, construct, or use any device which conceals any emission without resulting in a reduction in the total release of air contaminants to the atmosphere.	Not Exempt	N/A	In Compliance
NAC 445B.326.1 (445.7133.1) *Federally Enforceable Part 70 Program* Assertion of Emergency as Affirmative Defense to Action for Noncompliance Source may assert an affirmative defense to an action brought for noncompliance with a technology-based emission limitation contained in the Operating Permit if the holder of the Operating Permit demonstrates through signed, contemporaneous operating logs or other relevant evidence that: a. An emergency occurred as defined in 445B.056 and the holder of the Operating Permit can identify the cause of the emergency; b. The facility was being properly operated at the time of the emergency; c. During the emergency, the holder of the Operating Permit took all reasonable steps to minimize excess emissions; and d. The holder of the Operating Permit submitted notice of the emergency to the director within 2 working days after the emergency. The notice must contain a description of the emergency, any steps taken to mitigate emissions, and any corrective actions taken to restore the normal operation of the facility.	Not Exempt	As appropriate and as approved by NDEP-BAPC	In Compliance

TABLE 1

APPLICABLE REQUIREMENTS, TEST METHODS, AND COMPLIANCE STATUS

Applicable Requirement Citation and Description	Explanation of A Proposed Exemption	Test Methods and/or Monitoring	Compliance Status
NAC 445B.315.2.h (445.7112.2.h) *Federally Enforceable Part 70 Program* Source shall provide the Bureau of Air Quality, within a reasonable time, with any information that the Bureau of Air Quality requests in writing to determine whether cause exists for modifying, revoking and reissuing, reopening and revising or terminating this Operating Permit or to determine compliance with the conditions of this Operating Permit.	Not Exempt	N/A	In Compliance
NAC 445B.315.I (445.7145, 445.7112.2.l) *Federally Enforceable Part 70 Program* Source shall pay fees to the Bureau of Air Quality in accordance with the provisions set forth in NAC 445B.327 and 445B.331.	Not Exempt	N/A	In Compliance
NAC 445B.315.2.k (445.7112.2.k) *Federally Enforceable Part 70 Program* A responsible official of Source shall certify that, based on information and belief formed after reasonable inquiry, the statements made in any document required to be submitted by any condition of an Operating Permit are true, accurate and complete.	Not Exempt	NA	In Compliance
40 CFR 52.21(r)(4) *(Federally Enforceable PSD Program)* At such time that Source becomes a major stationary source or major modification solely by virtue of a relaxation in any enforceable limitation which was established after August 7, 1980, on the capacity of the source or modification otherwise to emit a pollutant, such as a restriction on hours of operation, then the requirements of 40 CFR Part 52.21 shall apply to the source or modification as though construction had not yet commenced on the source or modification.	Not Exempt	N/A	In Compliance

TABLE 1
APPLICABLE REQUIREMENTS, TEST METHODS, AND COMPLIANCE STATUS

Applicable Requirement Citation and Description	Explanation of A Proposed Exemption	Test Methods and/or Monitoring	Compliance Status
(NAC 445B.252) *(State Only Requirement)* Testing and Sampling 1. To determine compliance with NAC 445B.001 (445.430) to 445B.395 (445.646), inclusive, before the approval or the continuance of an Operating Permit or similar class of permits, the director may either conduct or order the owner of any stationary source to conduct or have conducted such testing and sampling as the director determines necessary. Testing and sampling or either of them must be conducted and the results submitted to the director within 60 days after achieving the maximum rate of production at which the affected facility will be operated, but not later than 180 days after initial startup of the facility and at such times as may be required by the director. 2. Tests of performance must be conducted and data reduced in accordance with the methods and procedures of the test contained in each applicable subsection of this section unless the director: a. Specifies or approves, in specific cases, the use of a method of reference with minor changes in methodology; b. Approves the use of an equivalent method; c. Approves the use of an alternative method, the results of which he has determined to be adequate for indicating whether a specific stationary source is in compliance; or d. Waives the requirement for tests of performance because the owner or operator of a stationary source has demonstrated by other means to the director□s satisfaction that the affected facility is in compliance with the standard. 3. Tests of performance must be conducted under such conditions as the director specifies to the operator of the plant based on representative performance of the affected facility. The owner or operator shall make available to the director such records as may be necessary to determine the conditions of the test of performance. Operations during periods of startup, shutdown, and malfunction must not constitute representative conditions of a test of performance unless otherwise specified in the applicable standard. 4. The owner or operator of an affected facility shall give notice to the director 30 days before the test of performance to allow the director to have an observer present. A written testing procedure for the test of performance must be submitted to the director at least 30 days before the test of performance to allow the director to review the proposed testing procedures. 5. Each test of performance must consist of at least three separate runs using the applicable method for that test. Each run must be conducted for the time and under the conditions specified in the applicable standard. For the purpose of determining compliance with an applicable standard, the arithmetic means of results of the runs apply. In the event of forced shutdown, failure of an irreplaceable portion of the sampling train, extreme meteorological conditions, or other circumstances with less than three valid samples being obtained, compliance may be determined using the arithmetic mean of the results of the other two runs upon the director□s approval. 6. All testing and sampling will be performed in accordance with recognized methods as specified by the director. 7. The cost of all testing and sampling and the cost of all sampling holes, scaffolding, electric power, and other pertinent allied facilities as may be required and specified in writing by the director must be provided and paid for by the owner of the stationary source. 8. All information and analytical results of testing and sampling must be certified as to their truth and accuracy and as to their compliance with all provisions of these regulations, and copies of these results must be provided to the director no later than 60 days after the testing or sampling, or both.	Not Exempt	As determined necessary by the Class I Operating Permit, and the Director if needed. As provided in the Test Protocol approved by NDEP-BAPC	In Compliance

TABLE 1
APPLICABLE REQUIREMENTS, TEST METHODS, AND COMPLIANCE STATUS

Applicable Requirement Citation and Description	Explanation of A Proposed Exemption	Test Methods and/or Monitoring	Compliance Status
SIP Article 2.6 *(Federally Enforceable SIP Requirement)* Testing and Sampling 2.6.1 - To determine compliance with these regulations prior to approval of or prior to the continuance of an operating permit or similar class of permits, the Director may either conduct or order the owner of any source to conduct or have conducted such testing and sampling as the Director determines necessary. 2.6.2 - Within 60 days after achieving the maximum production rate at which the affected facility will be operated, but not later than 180 days after initial startup of such facility and at such other times as may be required by the Director. 2.6.3 - Performance tests shall be conducted and data reduced in accordance with the test methods and procedures contained in each applicable subpart unless the Director (1) specifies or approves, in specific cases, the use of a reference method with minor changes in methodology, (2) approves the use of an equivalent method, (3) approves the use of an alternative method the results of which he has determined to be adequate for indicating whether a specific source is in compliance, or (4) waives the requirement for performance tests because the owner or operator of a source has demonstrated by other means to the Director□s satisfaction that the affected facility is in compliance with the standard. 2.6.4 - Performance tests shall be conducted under such conditions as the Director shall specify to the plant operator based on representative performance of the affected facility. The owner or operator shall make available to the Director such records as may be necessary to determine the conditions of the performance tests. Operations during periods of startup, shutdown, and malfunction shall not constitute representative conditions of performance tests unless otherwise specified in the applicable standard. 2.6.5 - The owner or operator of an affected facility shall provide the Director 30 days prior notice of the performance test to afford the Director the opportunity to have an observer present. 2.6.6 - Each performance test shall consist of at least two separate runs using the applicable test method. Each run shall be conducted for the time and under the conditions specified in the applicable standard. For the purpose of determining compliance with an applicable standard, the arithmetic means of results of the runs shall apply. In the event of forced shutdown, failure of an irreplaceable portion of the sampling train, extreme meteorological conditions, or other circumstances with less than two valid samples being obtained, an additional performance test(s) must be conducted. 2.6.7 - All testing and sampling will be performed in accordance with recognized methods as specified by the Director. 2.6.8 - The cost of all testing and sampling and the cost of all sampling holes, scaffolding, electric power, and other pertinent allied facilities as may be required and specified in writing by the Director shall be provided and paid for by the owner of the source. 2.6.9 - All information and analytical results of testing and sampling shall be certified as to their truth and accuracy and as to their compliance with all provisions of these (SIP) regulations and copies of these results shall be provided to both the owner and Director.	Not Exempt	As provided in the Test Protocol approved by NDEP-BAPC	In Compliance

TABLE I
APPLICABLE REQUIREMENTS, TEST METHODS, AND COMPLIANCE STATUS

Applicable Requirement Citation and Description	Explanation of A Proposed Exemption	Test Methods and/or Monitoring	Compliance Status
NAC 445B.22087 *(State Only Requirement)* Open Burning The open burning of any combustible refuse, waste, garbage, oil, or for any salvage operations, except as specifically exempted, is prohibited. Specific exemptions from open burning are described in NAC 445B.22087.2.	Not Exempt	N/A	In Compliance
SIP Article 5.1 *(Federally Enforceable SIP Requirement)* Open Burning The open burning of any combustible refuse, waste, garbage, oil fires, or for any salvage operations, except as specifically exempted, is prohibited. Specific exemptions from open burning are described in SIP Articles 5.2, 5.2.1, 5.2.2, 5.2.3, 5.2.4 and 5.2.5.	Not Exempt	N/A	In Compliance
NAC 445B.22087 *(State Only Requirement)* Odors Source may not discharge or cause to be discharged, from any stationary source, any material or regulated air pollutant which is or tends to be offensive to the senses, injurious or detrimental to health and safety, or which in any way interferes with or prevents comfortable enjoyment of life or property.	Not Exempt	N/A	In Compliance
SIP Article 10 *(Federally Enforceable SIP Requirement)* Odors 10.1.1 - Source shall not discharge, or cause to be discharged from any source any material or air contaminant which is, or tends to be, offensive to the senses, injurious or detrimental to health and safety, or which in any way interferes with or prevents the comfortable enjoyment of life or property.	Not Exempt	N/A	In Compliance

TABLE 1
APPLICABLE REQUIREMENTS, TEST METHODS, AND COMPLIANCE STATUS

Applicable Requirement Citation and Description	Explanation of A Proposed Exemption	Test Methods and/or Monitoring	Compliance Status
NAC 445B.22093 *(State Only Requirement)* Organic Solvents and Other Volatile Compounds 1. Solvents or other volatile compounds such as paints, acids, alkalies, pesticides, fertilizers, and manure must be processed, stored, used, and transported in such a manner and by such means as to minimize the tendency to evaporate, leak, escape, or be otherwise discharged into the ambient air causing or contributing to air pollution. If methods of control are available and feasible effectively to reduce the contribution to air pollution from evaporation, leakage, or discharge, as determined by the director, the installation and use of such methods, devices, or equipment for control is mandatory. 2. Source may not place, store, or hold in any new reservoir, stationary tank or other container with a capacity equal to or greater than 40,000 gallons any gasoline, petroleum distillate, or other volatile organic compound having a vapor pressure of 1.5 lb/square inch absolute or greater under actual storage conditions unless the tank, reservoir, or other container is a pressure tank maintaining working pressure sufficient at all times to prevent loss of vapor or gas to the atmosphere or is equipped with one of the following devices properly installed, in good working order, and in operation: a. A floating roof which consists of a pontoon type or double-deck roof which rests on the surface of the liquid contents and is equipped with a seal to close the space between the roof eave and tank wall or a vapor balloon or a vapor dome designed in accordance with accepted standards of the petroleum industry. This control equipment is not permitted if the gasoline or petroleum distillate has a vapor pressure of 11 lb/square inch absolute or greater under actual conditions. All gauging and sampling devices for tanks must be gas tight except when gauging or sampling is taking place. b. Other equipment proven to be of equal efficiency for preventing discharge of gases and vapors to the atmosphere. 3. Any tank for the storage of any other petroleum or volatile organic compound which is constructed or extensively remodeled on or after November 7, 1975, must be equipped with a submerged fill pipe or the equivalent, as approved by the director, for control of emissions. 4. All facilities for dock loading of products consisting of petroleum or other volatile organic compounds having a vapor pressure of 1.5 lb/square inch absolute or greater at loading pressure must have facilities for submerged filling by submerged fill pipe or an acceptable equivalent, for the control of emissions.	Not Exempt	As required in the Class I Operating Permit and Contemporaneous log(s). Follow BMP.	In Compliance
SIP Article 9 *(Federally Enforceable SIP Requirement)* Organic Solvent, other Volatile Compounds 9.1 - Materials such as, but not limited to, solvents or other volatile compounds such as paints, acids, alkalies, pesticides, fertilizers, and manure shall be processed, stored, used, and transported in such a manner and by such means as to minimize the tendency to evaporate, leak, escape, or be otherwise discharged into the ambient air causing or contributing to air pollution; and where control methods are available and feasible effectively to reduce the contribution to air pollution from evaporation, leakage, or discharge, as determined by the Director, the installation and use of such control methods, devices, or equipment shall be mandatory.	Not Exempt	As required in the Class I Operating Permit and Contemporaneous log(s) Follow BMP.	In Compliance

TABLE 1
APPLICABLE REQUIREMENTS, TEST METHODS, AND COMPLIANCE STATUS

Applicable Requirement Citation and Description	Explanation of A Proposed Exemption	Test Methods and/or Monitoring	Compliance Status
SIP Article 9.2 *(Federally Enforceable SIP Requirement)* Storage Containers Equal to or Greater than 150 kiloliters (40,000 Gallons) 9.2.1 - Source shall not place, store, or hold in any new reservoir, stationary tank or other container any gasoline, petroleum distillate, or other volatile organic compound having a vapor pressure of 1,055 kilograms per square meter (1.5 lb/square inch absolute) or greater (under actual storage conditions) unless such tank, reservoir, or other container is a pressure tank maintaining working pressure sufficient at all times to prevent vapor or gas loss to the atmosphere or is equipped with one of the following vapor loss control devices (see 9.2.1, 9.2.1.2) properly installed, in good working order, and in operation. 9.2.1.1 - A floating roof which consists of a pontoon type or double-deck roof which rests on the surface of the liquid contents and is equipped with a closure seal to close the space between the roof eave and tank wall; or a vapor balloon or a vapor dome, designed in accordance with accepted standards of the petroleum industry. This control equipment shall not be permitted if the gasoline or petroleum distillate has a vapor pressure of 7,734 kilograms (11 lb/square inch absolute) or greater under actual conditions. All tank gauging and sampling devices shall be gas tight except when gauging or sampling is taking place. 9.2.1.2 - Other equipment proven to be of equal efficiency for preventing discharge of gases and vapors to the atmosphere.	N/A No tanks over 40,000 gallons	N/A	N/A
SIP Article 9.2 *(Federally Enforceable SIP Requirement)* Storage Containers Equal to or Greater than 150 kiloliters (40,000 Gallons) (Continued) 9.2.2 - Any other petroleum or volatile organic compound storage tank which is constructed or extensively remodeled, on or after the effective date of these regulations, shall be equipped with submerged fill pipe or equivalent, as approved by the Director for control of emissions.	N/A No tanks over 40,000 gallons	N/A	N/A
SIP Article 9.2 *(Federally Enforceable SIP Requirement)* Storage Containers Equal to or Greater than 150 kiloliters (40,000 Gallons) (Continued) 9.2.3 - All facilities for dock loading of petroleum or volatile organic compound products, having a vapor pressure of 1,055 kilograms per square meter (1.5 pounds per square inch absolute) or greater at loading pressure, shall provide for submerged filling by a submerged fill pipe or acceptable equivalent for the control of emissions	N/A No tanks over 40,000 gallons	N/A	N/A
NAC 445B.22037 *(State Only Requirement)* Fugitive Dust 1. Source may not cause or permit the handling, transporting, or storing of any material in a manner which allows or may allow controllable particulate matter to become airborne. 2. Except as otherwise provided in subsection 4, Source may not cause or permit the construction, repair, demolition, or use of unpaved or untreated areas without first putting into effect an ongoing program using the best practical methods to prevent particulate matter from becoming airborne. As used in this subsection, □best practical methods□ includes, but is not limited to, paving, chemical stabilization, watering, phased construction, and revegetation. 3. Except as provided in subsection 4, Source may not disturb or cover 5 acres or more of land or its topsoil until he has obtained an Operating Permit for surface area disturbance to clear, excavate, or level the land or to deposit any foreign material to fill or cover the land. 4. The provisions of subsections 2 and 3 do not apply to: a. Agricultural activities occurring on agricultural land; or b. Surface disturbances authorized by a permit issued pursuant to NRS 519A.180 which occur on land which is not less than 5 acres or more than 20 acres.	Not Exempt	Visual observation using EPA Method 22 or Method 9	In Compliance

TABLE 1

APPLICABLE REQUIREMENTS, TEST METHODS, AND COMPLIANCE STATUS

Applicable Requirement Citation and Description	Explanation of A Proposed Exemption	Test Methods and/or Monitoring	Compliance Status
SIP Article 7.3 *(Federally Enforceable SIP Requirement)* Fugitive Dust 7.3.1 - Source shall not cause or permit the handling, transporting, or storing of any material in a manner which allows, or may allow, controllable particulate matter to become airborne. 7.3.2 - In areas designated by the Director, Source shall not cause or permit the construction, repair, or demolition work, or the use of unpaved or untreated areas without applying all such measures as may be required by the Director to prevent particulate matter from becoming airborne. 7.3.3 - Source may not disturb or cover 8 hectares (20 acres) or more of land or its topsoil, except for agricultural land until Source obtains a registration certificate or operating permit for the purpose of clearing, excavating or leveling such land or any foreign material to fill or cover such land.	Not Exempt	Visual observation using EPA Method 22 or Method 9	In Compliance
NAC 445B.227 (445.664) *Federally Enforceable Part 70 Program* Facilities Operation Source may not: 1. Operate a stationary source of air pollution unless the control equipment for air pollution which is required by applicable requirements or conditions of this Operating Permit is installed and operating. 2. Disconnect, alter, modify or remove any of the control equipment for air pollution or modify any procedure required by an applicable requirement or condition of this Operating Permit.	Not Exempt	Approved CAM Plan as required by the Class I Operating Permit	In Compliance
The following provisions are applicable requirements of this Operating Permit: 1. Source will comply with all applicable provisions of; a. 40 CFR Part 60.1 - 60.19 - Standards of Performance for New Stationary Sources - General Provisions; b. 40 CFR Part 61.01 - 61.19 - National Emission Standards for Hazardous Air Pollutants - General Provisions; c. 40 CFR Part 61.140 - 61.157 - National Emission Standards for Asbestos; d. 40 CFR Part 63.1 - 63.15 - National Emission Standards for Hazardous Air Pollutants for Source Categories - General Provisions; e. 40 CFR Part 70 - State Operating Permit Program.	Not Exempt	As required in the Class I Operating Permit	In Compliance
Source is subject to 40 CFR Part 68 - Chemical Accident Prevention Provisions. Source shall submit a risk management plan (RMP) by June 21, 1999, or other dates specified in 40 CFR 68.10. Source shall certify compliance with these requirements as part of the annual compliance certification as required by 40 CFR Part 70.	Not Exempt	As specified in the RMP	In Compliance
Source will comply with all provisions of 40 CFR Part 82. Persons opening appliances for maintenance, service, repair, or disposal must comply with the required practices pursuant to 40 CFR 82.156. Equipment used during maintenance, service, repair, or disposal of appliances must meet the standards for recycling and recovery equipment in accordance with 40 CFR 82.158. Persons performing maintenance, service, repair or disposal of appliances must be certified by a certified technician pursuant to 40 CFR 82.161.	Not Exempt	Contemporaneous log by a certified technician.	In Compliance

TABLE 1

APPLICABLE REQUIREMENTS, TEST METHODS, AND COMPLIANCE STATUS

Applicable Requirement Citation and Description	Explanation of A Proposed Exemption	Test Methods and/or Monitoring	Compliance Status
Chemical Accident Prevention Provisions Source shall: 1. Submit a compliance schedule for meeting the requirements of 40 CFR Part 68.215 by the date provided in 40 CFR Part 68.10(a) or; 2. Submit as part of the compliance certification submitted under 40 CFR Part 70.6(c)(5), a certification statement that the source is in compliance with all requirements of 40 CFR Part 68.215, including the registration and submission of the risk management plan.	Not Exempt	As provided in the RMP	In Compliance
Source is not in compliance with NAC 445B.230 - □Plan for reduction of emissions.□ In order to achieve compliance Source shall submit a plan for reducing or eliminating emissions associated with the stationary source in accordance with the episode stages of alert, warning, and emergency as contained in the applicable State Implementation Plan for the State of Nevada. The plan must be submitted on or before July 1, 1996.	Not Exempt	As required in the Emergency Episode Plan	In Compliance

Appendix 4

STREAMLINING AND SHIELD ALLOWANCE

NOT APPLICABLE

Appendix 5

FACILITY-WIDE POTENTIAL TO EMIT TABLES

Provide the stationary source's total emissions by completing Table 1 and Table 2 of Appendix 5. *(Note: Table1must include the insignificant activity emissions identified in Table 2.)* [NAC 445B.295.8].

TABLE 1

FACILITY-WIDE (STATIONARY SOURCE) POTENTIAL TO EMIT POUNDS/HOUR AND TONS/YEAR

Pre-renewal of Main Bake

Pollutant	Potential to Emit (pounds/hour)	Potential to Emit (tons/year)
Total Particulate Matter (PM)	**574.63**	**84.30**
Particulates as PM_{10}	**571.73**	**80.20**
Sulfur Dioxide	**69.80**	**66.00**
Carbon Monoxide	**30.30**	**33.70**
Oxides of Nitrogen	**134.60**	**178.00**
Volatile Organic Compounds	**9.16**	**22.40**
Lead	**0.014**	**9.05**
Hazardous Air Pollutants (Specify Each Pollutant)		
Facility Wide HAP Cap		24.9
As		5.49E-03
Be		3.11E-04
Cd		3.31E-04
AR, BE, & CR combined*		2.91E-03
Cr		9.59E-03
Pb		9.05E+00
PB & Cd combined*		7.24E-03
Hg		***0.0294***
Mn		1.38E-02
Ni		9.43E-04
Se		2.05E-04
Benzene		1.91E-01
Toluene		5.37E-01
Xylenes		2.49E+00
Propylene		4.17E-02
1,3-Butadiene		1.02E-03
Formaldehyde		2.75E-02
Acetaldehyde		1.24E-02
Acrolein		1.50E-03

Napthalene		2.80E-03
Carbon tetrachloride		2.15E-03
Chloroform		8.19E-04
Cl_2		3.60E-01
Ethylbenzene		4.16E-03
Ethyl chloride		8.97E-04
HCl(a)(b)		9.9E+00
n-Hexane		6.92E-02
Methyl chloride		1.38E-03
Styrene		9.17E-04
Vinyl chloride		2.93E-03
2,24 Trimethylpentane		1.90E-02
MTBE		8.69E-02
Dioxins/furans combined*		6.24E-09
Other Regulated Pollutants (Specify)		

(a) Assumes all RF-9 and BEDS HCl + Cl2 emissions are HCL emissions.
(b)HCl is limited by the requested facility-wide cap of 9.9 tons per year.
*= HAPs PTE from hazardous waste combustors only.

TABLE 2

INSIGNIFICANT ACTIVITIES
POTENTIAL TO EMIT
POUNDS/HOUR AND TONS/YEAR

Insignificant Activity	Pollutant	Potential to Emit (pounds/hour)	Potential to Emit (tons/year)
See HWAD inventory	PM	0.78	1.39
for specific	PM10	0.67	0.94
emission units	Sulfur	0.64	1.80
	SO2	1.27	3.70
	NOX	9.27	11.7
	CO	2.12	2.80
	VOC	2.16	6.96
	Pb	0.0007	0.0032
	As		2.76E-04
	Be		2.07E-04
	Cd		2.07E-04
	Cr		2.07E-04
	Pb		6.21E-04
	Hg		2.07E-04
	Mn		4.14-E-04
	Ni		2.07E-04
	Se		1.04E-03
	Benzene		1.51E-02
	Toluene		6.61E-03
	Xylenes		4.61E-03
	Propylene		4.17E-02
	1,3-Butadiene		6.32E-04
	Formaldehyde		1.91E-02
	Acetaldehyde		1.24E-02
	Acrolein		1.50E-03
	Napthalene		1.37E-03

Appendix 6

DETAILED EMISSIONS CALCULATIONS

Please Attach Emission Calculations

Instructions

1. Provide descriptions of all emissions, and provide emission rates, of any pollutants for which the source is major and all emissions of regulated air pollutants from all emission units. [NAC 445B.3363.1(a), NAC 445B.3363.1(b), NAC 445B.295.8]

2. Provide the emission rates of all regulated air pollutants that are subject to an emissions limitation pursuant to an applicable requirement. The emission rate must be described in pounds per hour and tons per year and in such terms as are necessary to establish compliance using the applicable standard reference test method. [NAC 445B.3363.1(d)

3. Provide all supporting calculations and documentation of all emission factors for the emission rates specified in 1 and 2 above. This information shall be provided for each emission unit. *(Note: A listing of default emission control efficiency values is contained in Attachment 4.)* [NAC 445B.3363.1(f)]

4. Provide any other information required by any applicable requirement for each emission unit. [NAC 445B.3363.1(e)]

5. Provide all emissions of regulated air pollutants (in pounds per hour and tons per year) from **each insignificant activity** (see Section 4 of Appendix 2 to determine if these calculations are required), and calculations and supporting documentation. The emissions and supporting calculations should reflect all insignificant activities listed in Appendix 2. [NAC 445B.295.8]

DETAILED EMISSION CALCULATIONS

2,700	zinc plates	x	48	g/plate	x	0.02% mercury/plate [1]	=	2592	g/batch
2,592	g/batch	÷	453.59	g/lb			=	5.71	pounds/ batch
5.71	pounds/batch	x	730	batches/yr[2]			=	4171.5	lb/yr
4,171.50	lb/yr	÷	2000	lb/ton	x	0.01 efficiency (3)	=	0.02	ton/yr

(1) Conservative estimate of mercury in each zinc plate

(2) Each batch takes a minimum of 12 hours to complete; 8,760 hours/12 hours = 730 batches

(3) Minimum efficiency specified by manufacturer

APPENDIX 6
HAWTHORNE ARMY DEPOT
BATTERY RECYCLING FACILITY
MERCURY EMISSION CALCULATIONS

2700 ZINC PLATES	*	48 G/PLATE	*	0.02 % MERCURY/PLATE [1]		=	2592 G/BATCH
2592 G/BATCH	/	453.59 G/LB				=	5.71 POUNDS/ BATCH
5.71 POUNDS/BATCH	*	730 BATCHES/YR [2]				=	4171.5 LB/YR
4171.50 LB/YR	/	2000 LB/TON	*	0.01 EFFICIENCY [3]		=	0.02 TON/YR

(1) CONSERVATIVE ESTIMATE OF MERCURY IN EACH ZINC PLATE
(2) EACH BATCH TAKES A MINIMUM OF 12 HOURS TO COMPLETE; 8,760 HOURS/12 HOURS = 730 BATCHES
(3) MINIMUM EFFICIENCY SPECIFIED BY MANUFACTURER

Appendix 7

EMISSIONS CAP

Please Attach Emission Cap Information

☒ **Please Check if not applicable**

Instructions

Federally enforceable emissions cap: Please include in Appendix 7 the information required in 1 through 3 below for each federally enforceable emissions cap in Appendix 7. The request for a federally enforceable emissions cap must, at a minimum:

1. State each applicable requirement which the applicant seeks to avoid [NAC 445B.296.2(a)];
2. Demonstrate that any applicable requirements not avoided by the cap will be met [NAC 445B.296.2(b)];
3. Contain proposed conditions, including monitoring and recordkeeping conditions for each proposed federally enforceable emissions cap, of the operating permit which will ensure compliance with any applicable requirement [NAC 445B.296.2(c)].
4. Contain any additional information that the director determines necessary to process the application. [NAC 445B.296.2(d)]

(Note: A common example of an emissions cap is a combined limitation on the yearly (annual) amount of fuel which may be combusted between two boilers.)

Appendix 8

NARRATIVE DESCRIPTION

-

PROCESS FLOW DIAGRAM

-

PLOT PLAN

-

MAP

-

APPENDIX 8 NARRATIVE DESCRIPTION

A new retort was purchased for the Battery Recycling Facility (BRF) for the Naval Undersea Warfare Center (NUWC) Hawthorne Army Depot (HWAD). The electric fired retort was designed by Lochhead Haggerty Engineering for the purpose of recovering mercury from a variety of materials. The new retort will replace the former gas-fired retort which had been developed for the mining industry and modified to meet the needs of the BRF. A brochure for the new retort, which is based on a 37 cubic foot model of the oven, follows this narrative. The oven at the BRF is identical to the retort presented in the brochure, except the BRF model is 15 cubic feet.

Zinc plates from silver-zinc battery cells will be processed in the retort. The LR-190 battery cell is the most common silver-zinc battery cell that will be processed at the BRF. Each LR-190 cell consists of nine zinc plates (the anodes) and eight silver plates (the cathodes), along with a potassium hydroxide electrolyte if the cells have been used. The zinc plates contain between 0.5 and 2% mercuric oxide. After each cell has been separated into its components, the silver plates are transferred to a refinery and the zinc plates are processed in the retort to recover mercury and remove moisture prior to being transferred to the refinery for silver recovery.

The amount of zinc cells that will be processed per retort batch will be based on the capacity of the retort and the ability to effectively recover the mercury from the plates. Approximately 2,700 zinc plates from 300 silver-zinc cells will be processed during each 12 to 16 hour retort run. The batch times account for temperature ramp up, soaking, and cooling.

Each zinc plate weighs 48 grams on a dry weight basis, and generally includes approximately 20% moisture. If it is conservatively assumed that each of the 2,700 zinc plates contains 2% mercury, approximately 2,592 grams (5.7 pounds) of mercury would be processed per retort batch (based on a dry weight basis).

Assuming that each batch takes the minimum of 12 hours to complete, 730 batches of zinc plates can be processed in the retort per year (8,760 hours). If 730 batches of zinc plates containing 5.7 pounds of mercury per batch are processed annually, and there is a 99% capture efficiency as specified by the manufacturer, the potential to emit mercury would be 41.61 pounds per year, or 0.02 tons per year.

Although other silver zinc batteries may be processed in the retort, the sizes of the plates are similar to the LR-190s and data from the LR-190s will provide a reasonable estimate of the actual throughput and emission of mercury from these batteries.

lochhead
precision engineering

MERCURY RETORT

Model MR-37E

Lochhead Hayley Engineering & Manufacturing Co. Ltd • 4299 - 46th Street, Delta, British Columbia V4K 3N3
Telephone 604 952 5501 Facsimile 604 952 1955 Website www.lochhead-engineering.com

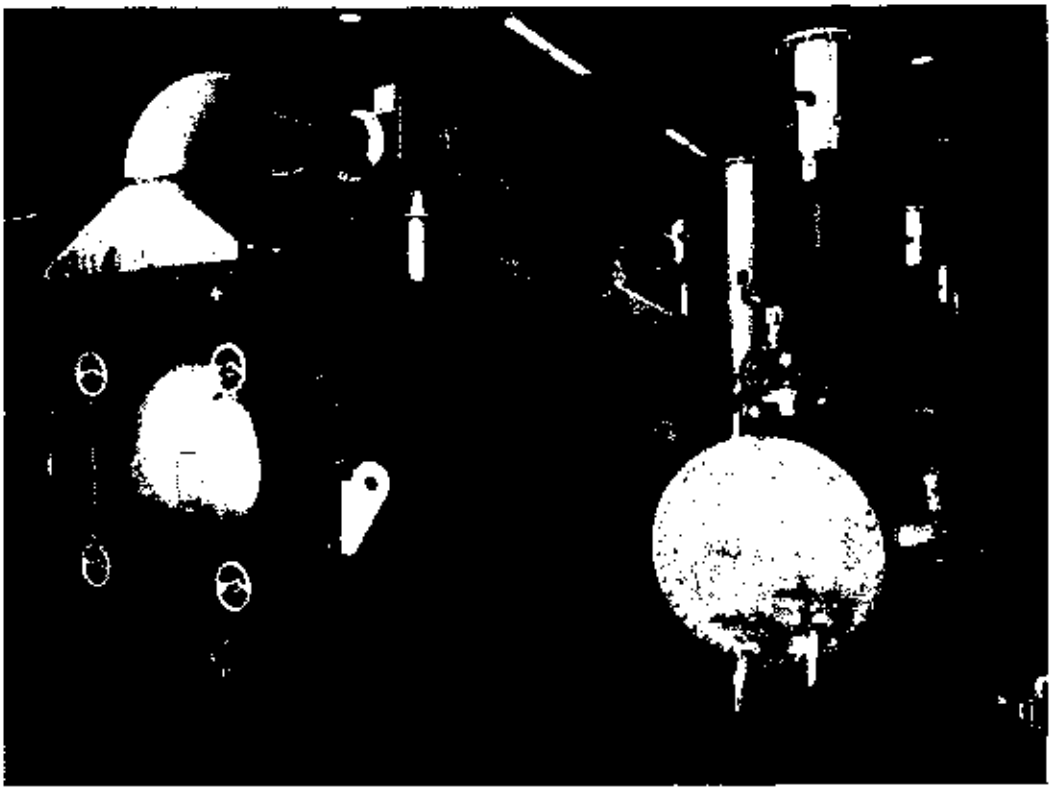

MERCURY RETORT Model MR-37E

The MR-37E Mercury Retort is an electrically heated thermal batch retort system utilized for the recovery of mercury from various mercury containing sources. The automatic process controller allows for the pre-programming and storage of up to eight (8) material process programs. Fluorescent powders, contaminated metal/glassware, mercury containing gold/silver precipitate and electrowinning sludge are just a few of the materials which can be processed with this system.

Front View of MR-37E

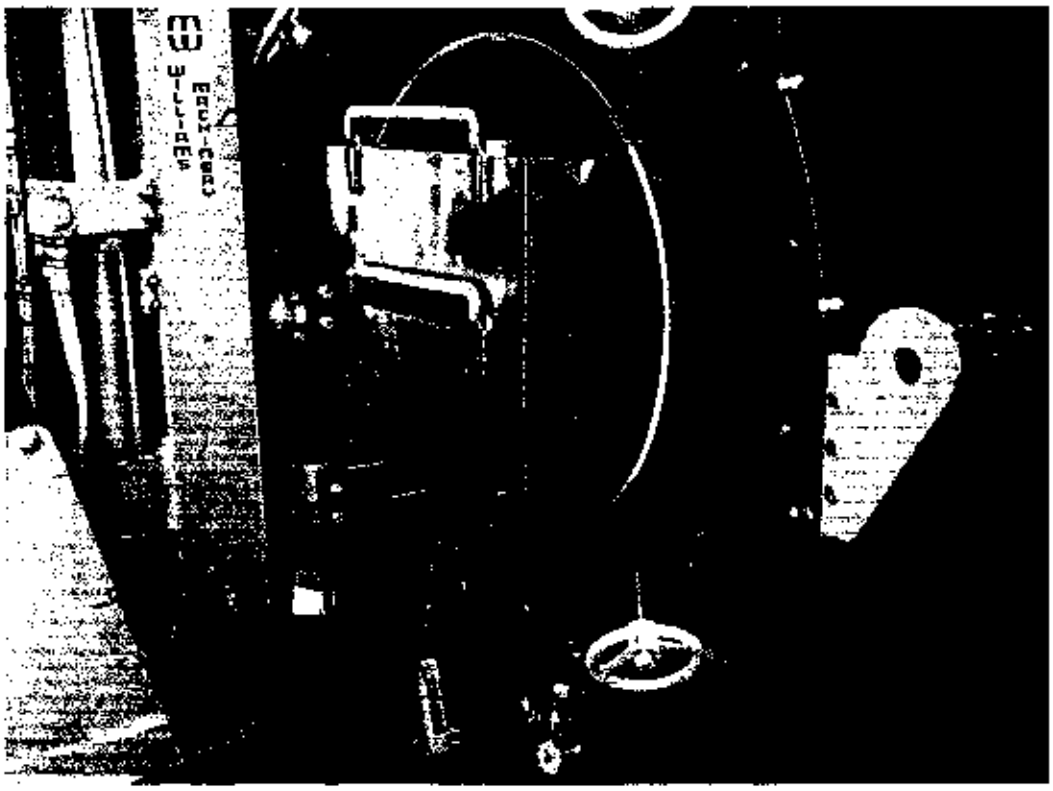

The retorting process begins with the loading of contaminated material. The MR-37E integrated system incorporates a front loading horizontal retort, which provides easy and efficient loading of up to eight (8) material processing trays or "boats". A standard forklift is used to position the boats near the front of the retort, then a specially designed hydraulic scissor boat transporter is used to advance the boats to the end of the retort with safety and ease.

Scissor Boat Transporter

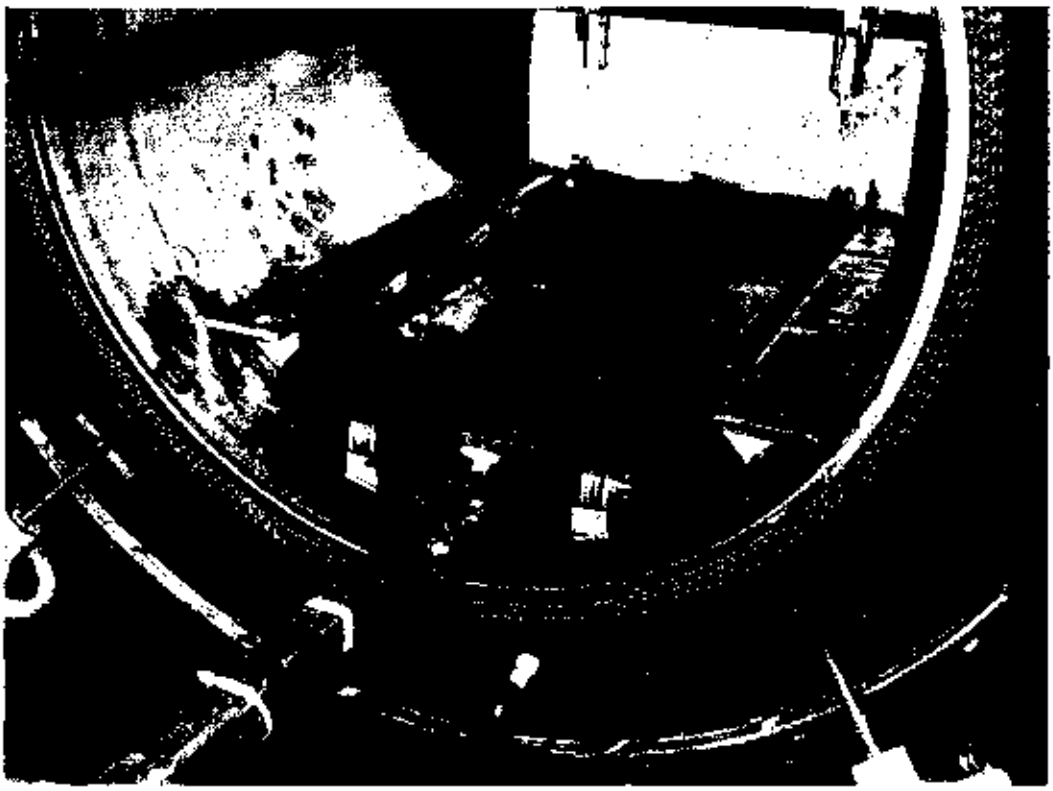

Once the loading process has been completed, the high temperature sealed door is closed and the automated process can be initiated. Depending on the material being processed, the operator selects one of the stored programs in the pre-programmed controller. Throughout the retorting process, automatic monitoring and control of a number of process variables is conducted by temperature and pressure instrumentation. The temperature controller ensures the proper sequencing of various ramp and hold segments, and an optional pressure controller can be used to maintain a preset vacuum. Recording of temperatures and pressures is standard.

After closing the retort door, a vacuum is drawn on the entire system. Two vacuum pumps are provided, one operating and one standby. The standby pump is available should the operating pump fail during the retorting cycle.

Vacuum Pumps

As the vaccum is drawn, the temperature regime is initiated to begin the mercury recovery process. A typical thermal retort process consists of an initial ramp up to a temperature where for a period of time any mositure is removed, followed by another ramp up to the vaporization temperature for mercury. The process temperature is then held for an optimum period of time to ensure maximum vaporization of the mercury.

The mercury vapor passes through specially designed primary and secondary condensing sytems. The primary system consists of two (2) condensing tubes which initially cool any steam and mercury vapor, converting the vapor to a liquid phase just prior to reaching the collector vessel. The collector vessel is a cyclindrical tank which holds all of the water and mercury vapor produced by the process.

Condenser Tube and Collector Vessel

A secondary aftercooler located above the mercury collector vessel provides an additional level of mercury vapor condensation. At the top of the aftercooler a mist eliminator collects very tiny droplets which agglomerate to a point where they will drop down into the collector vessel. The removal of water and mercury from the collector vessel is accomplished through a drain valve located at the front of the collector.

The MR-37E retort system includes a state of the art air filtration system consisting of two (2) treated carbon filter columns operating in parallel. The carbon contained in these columns is a sulfur treated activated carbon, which is capable of adsorbing up to 83% of its own weight of mercury. An easily accessible air filter is located between the carbon columns and the vacuum pump to provide an added level of particulate filtration.

Carbon Columns

A unique heating control sytem utilizing the most technically advanced silicon controlled rectifiers (SCR's) is used in the MR-37E. Two of the three phases each has two (2) SCR's back to back, providing full wave power control. Unlike contactors, which are opened or closed randomly in the power sine wave, each SCR is zero crossing fired. The switching on or off of the SCR is done precisely as the current for that phase is zero, resulting in an electrically quite switch. No detectible electical noise is generated by the SCR's. The SCR control has the additional advantage of operating at any point between zero and 100%, thus providing exceptional process temperature control.

SCR Power Controller

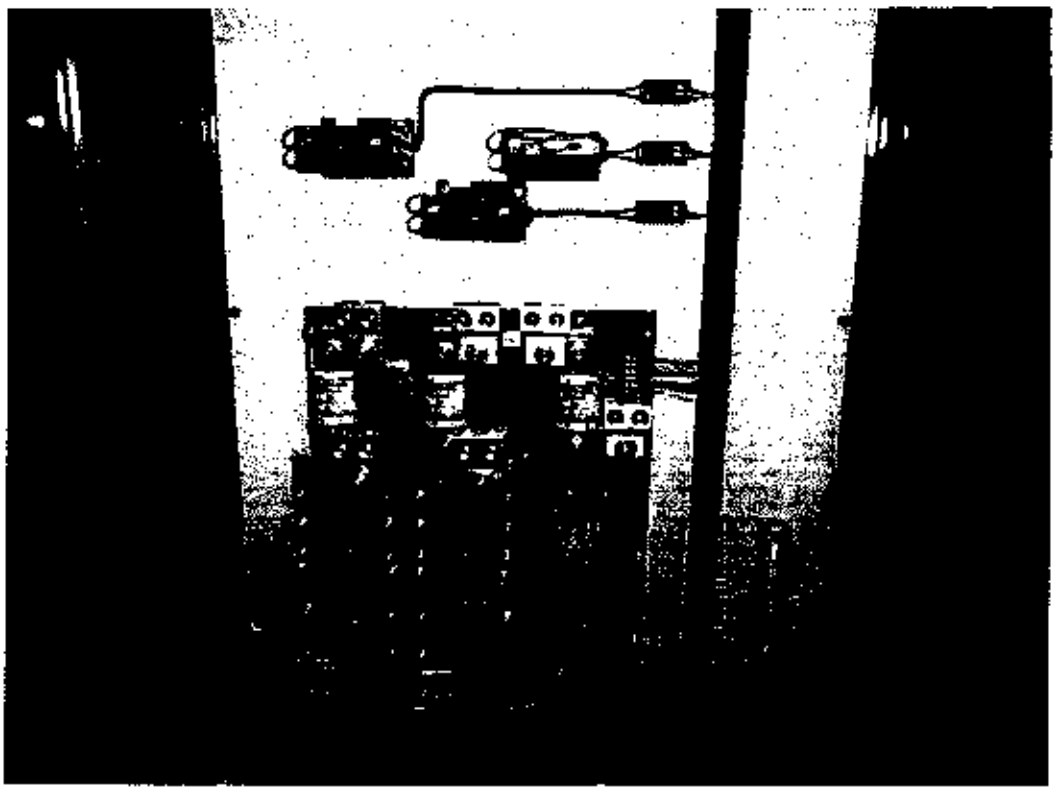

Redundant safety features have also been incorporated into the MR-37E. Although a high temperature limit controller normally will shut down the heat input to the furnace, a back-up high temperature run-away feature is included. An audible alarm will sound and an indicator lamp on the front of the control panel will illuminate. This combination of audible and visual alarms alert the operator to any change in the normal operation of the equipment. The operator will be required to acknowledge the the alarm by pressing an alarm silence button. A timer is incorporated into the alarm system which checks to see if the problem causing the alarm has been rectified within a period of time. If not, the audible alarm will again require acknowledgement by the operator.

As a backup for the process controller, a process timer is set to stop the heating cycle. Normally, none of these redundant features is required, however, they do ensure a high level of safety and equipment protection.

The MR-37E Mercury Retort System provides functionality and an ease of operation while offering a high standard of environmental compliance and safety. The system combines efficient large volume, batch retorting with operational flexibility, to cost effectively address varying market conditions.

MR-37E Features

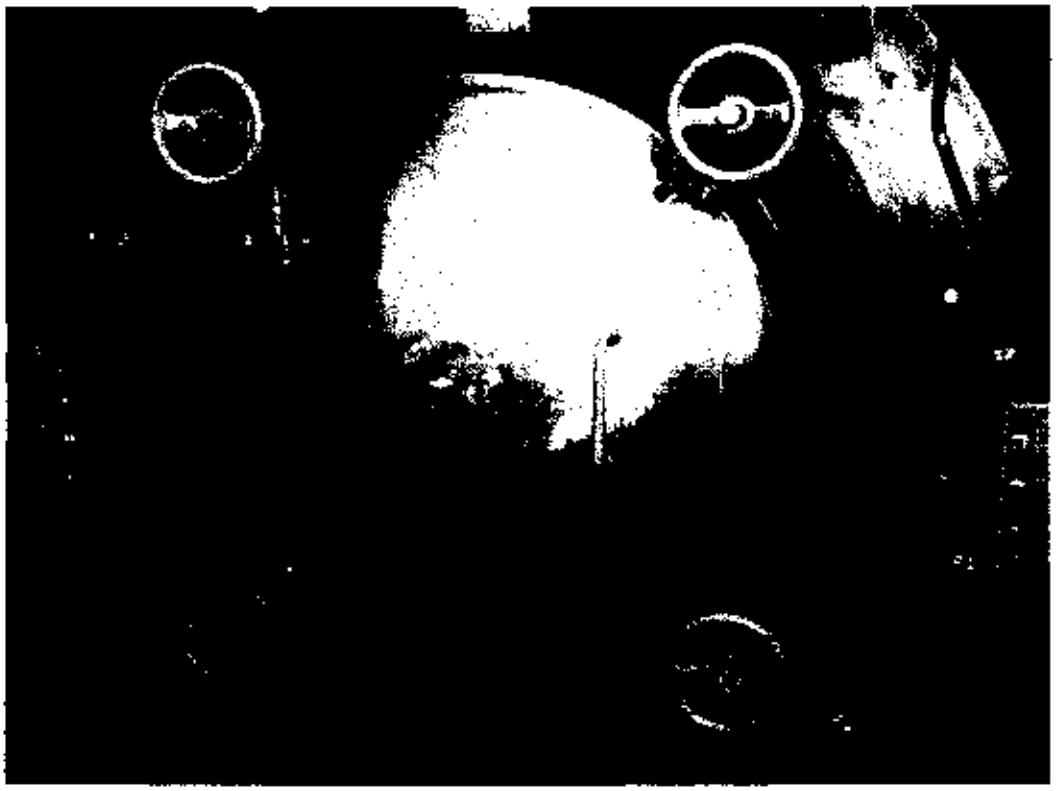

- Front loading, horizontal cylindrical vessel
- Vapor outlet at rear
- Cooling ports at furnace face to allow air to enter during cooling cycle
- Cooling ports with control valves and check valves for cooling product
- Horizontally split furnace for ease of maintenance
- Hinged doors for easy heating element access
- Upper furnace section insulated with high temperature ceramic blanket
- Bottom furnace section lined with mineral board and refractory brick
- Grouved channels in refractory to contain coiled heating elements
- Open circuit cooling sytem including damper and fan

MR-37E Features, cont'd

Loading Boats into MR-37E

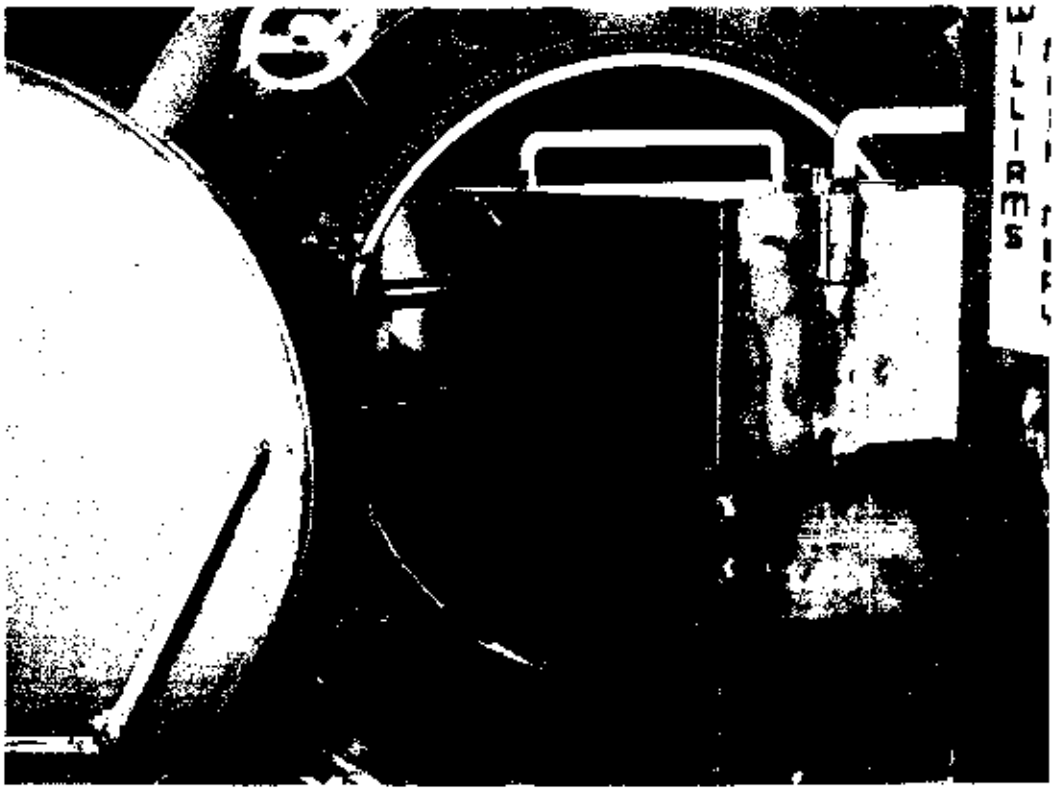

- Front loading door swings effortlessly on ball bearing davit type hinge
- High temperature seal between door and furnace keeps door cool
- Shelves along inner wall of vessel support up to nine (9) boats
- Scissor lift transporter on angle rails for ease of loading stacked boats
- Simple hand wheel door lock for quick opening/closing
- Drip tray on inner door face to prevent spillage of condensate

MR-37E Features, cont'd

Rear View of MR-37E

- Water jacketed condenser tubes with rodding ports for easy cleanout
- Collector vessel to contain water and liquid mercury for multiple batches
- Aftercooler and mist eliminator to supercool and condense vapors
- Flush nozzle to rinse mist eliminator after each batch operation
- In-line dust filter
- Vacuum pump and motor
- Sulfur treated activated carbon columns to purify discharging air
- Individually removable carbon columns for ease of carbon replacement

MR-37E Standard Equipment Included

Control Panel of MR-37E

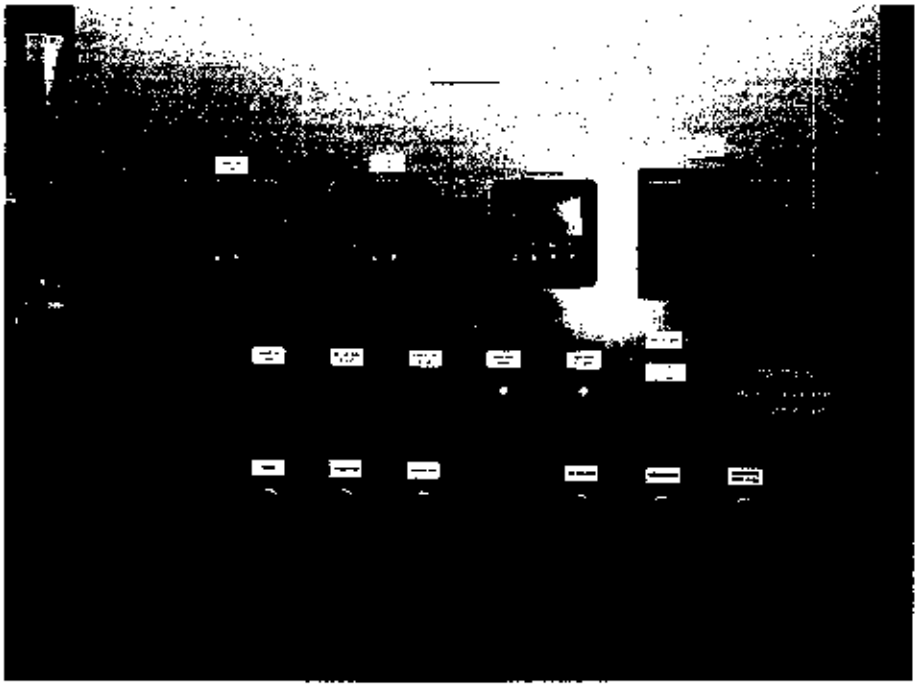

Quantity	Description
1 only	Refractory Lined Furnace with Heating Elements
1 only	Stainless Steel Retort Vessel
2 only	Condenser Tubes
1 only	Collector Vessel
1 only	Aftercooler and Mist Eliminator
4 only	Sulfur Treated Carbon Column Filters
1 only	Vacuum Pump and Motor
1 only	Scissor Lift and Boat Transporter
8 only	Material Boats having 37 cuft Volume Capacity
1 only	Exhaust Fan
1 only	Control Panel with 8 Program Storage Capacity
1 only	SCR Power Panel for Heating Element Control
1 set	Instrumentation
2 only	Operating and Maintenance Manual; Installation Drawings

MR-37E System Specification

Parameter	Imperial Units	Metric Units
Retort System		
Length	13 ft. 8 in.	4,17 meters
Width	13 ft. 6 in.	4,12 meters
Height	11 ft. 2 in.	3,40 meters
Control Panel		
Length	3 ft. 1 in.	0,94 meters
Width	3 ft. 10 in.	1,17 meters
Height	7 ft. 2 in.	2,18 meters
Approvals	CSA	CE
Process Capacity		
No. Boats	8	8
Max. Retort Capacity	37.0cuft	1154 Liters
Max. Capacity per Boat	4.63 cuft	144,3 Liters
Norm. Cap. per Boat	4.63 cuft	144,3 Liters
Power Consumption		
Max. Power Input	200 kWatt	200 kWatt
Normal Operating	185 kWatt	185 kWatt
Voltages available	240/480/600 60 Hz	380/440 50 Hz
No. phases	3	3
Other Services Req'd		
Condenser Tube Water	15 Usgpm @ 15 psig	57 L/min @ 103kPa
Aftercooler Water	5 Usgpm @ 10 psig	18,1 L/min @ 69 kPa
Mist Elimin. Flush Water	17 Usgpm @ 15 psig (for 10 seconds at end of each batch)	61,7 L/min @ 103 kPa (for 10 seconds at end of each batch)
No. Operators	1 only	1 only
Mercury Emissions		
Equipment Emissions (Based on proper equipment utilization and maintenance)	< 0.05 mg/M^3	< 0,05 mg/M^3
Ambient Concentrations (Room to be well ventilated)	< 0.05 mg/M^3	< 0,05 mg/M^3

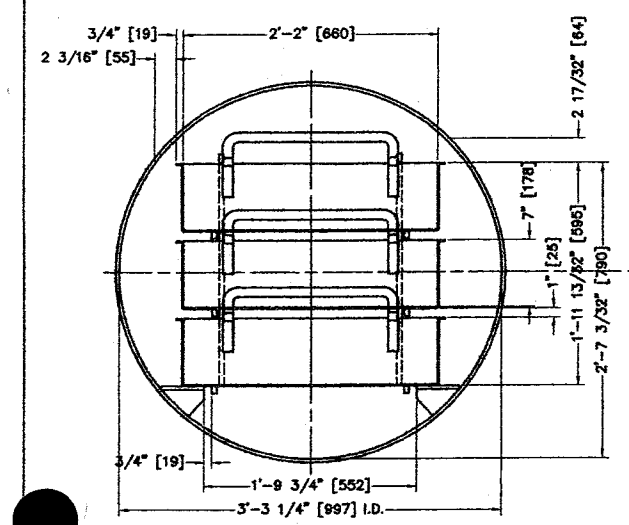

SECTION 'A-A'
SCALE 1:10

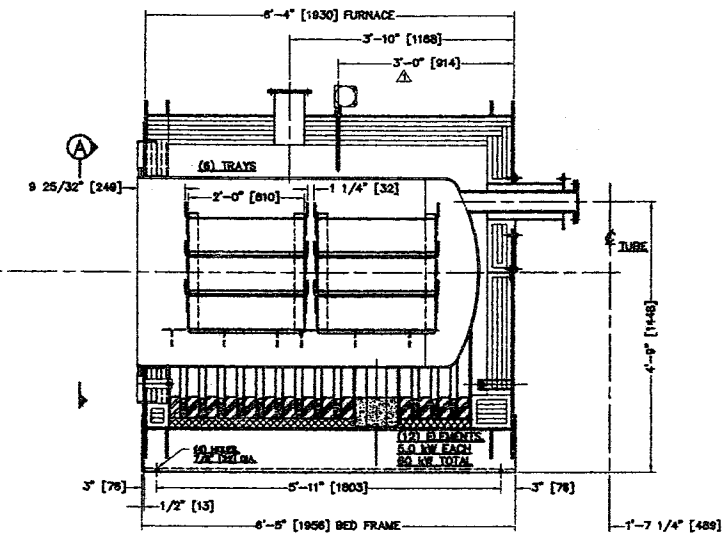

SECTIONAL VIEW
SCALE: 1:20

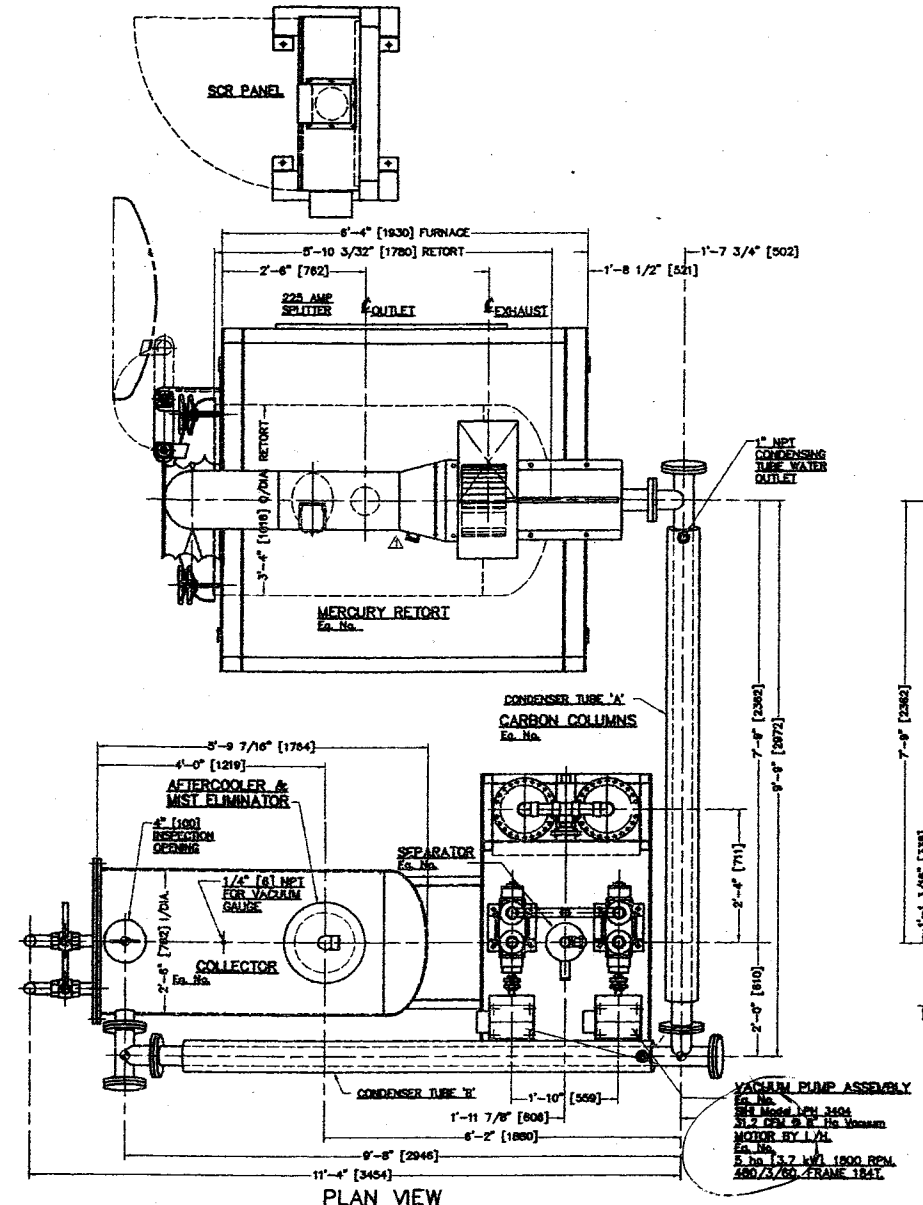

PLAN VIEW
SCALE 1:20

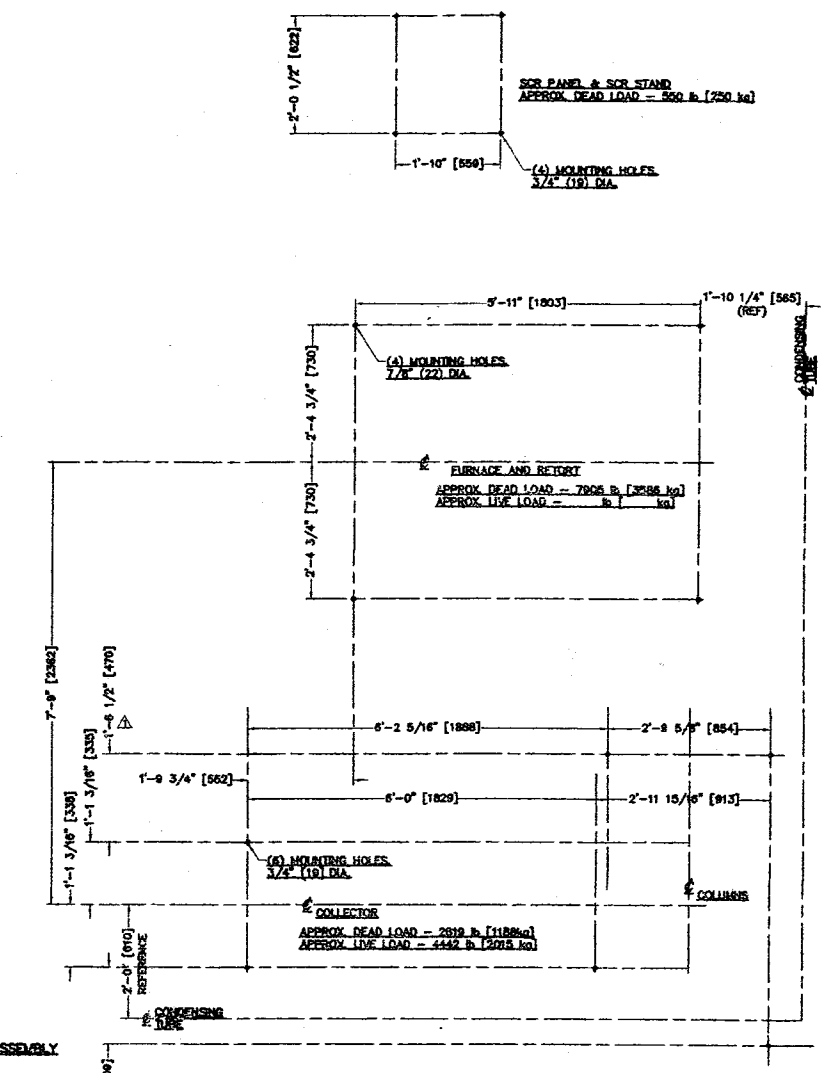

PLAN VIEW FOUNDATION AND MOUNTING DETAILS

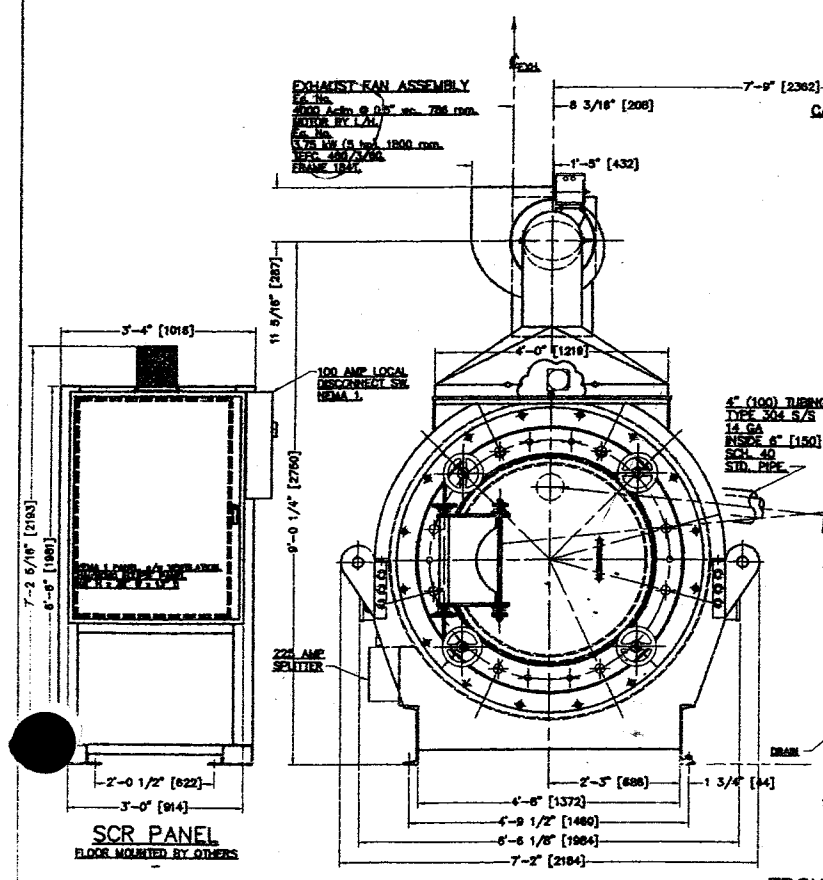

SCR PANEL
FLOOR MOUNTED BY OTHERS

FRONT ELEVATION
SCALE 1:20

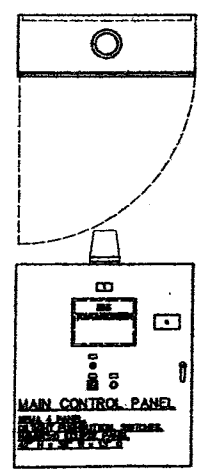

CONTROL PANEL
WALL MOUNTED BY OTHERS

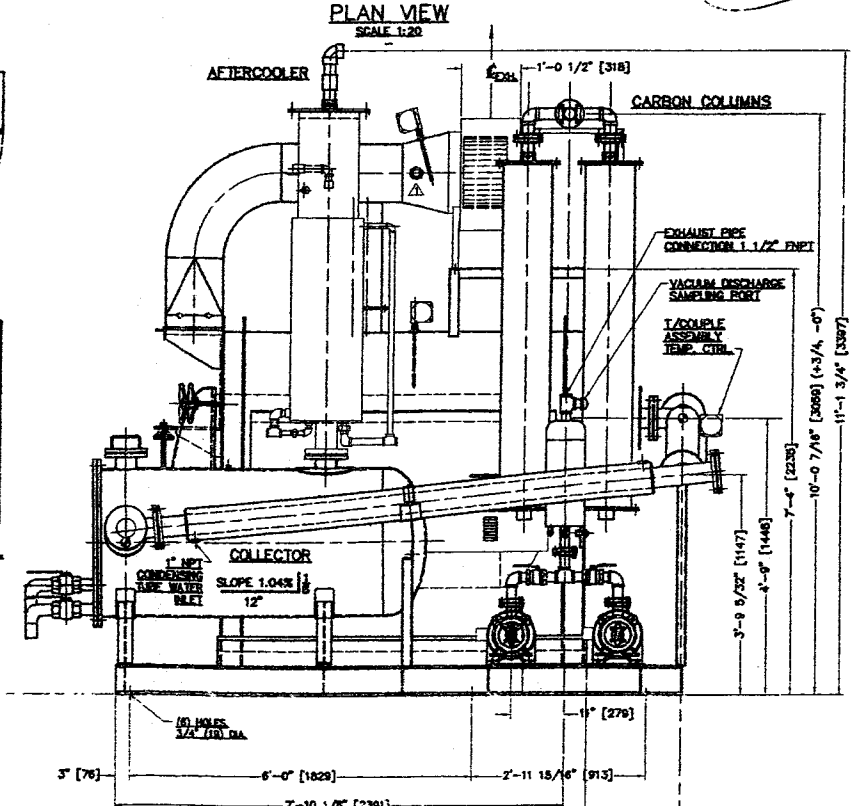

SIDE ELEVATION
SCALE 1:20

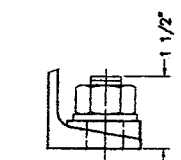

5/8" MTG. BOLT (TYP.)
SCALE 1:2

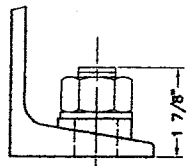

3/4" MTG. BOLT (TYP.)
SCALE 1:2

REFERENCE DRAWINGS

DWG. D-127200 ELECTRICAL SCHEMATIC
DWG. A-127201 ELECTRICAL COMPONENT LIST
DWG. D-127202 PROCESS FLOW & INSTRUMENTATION
DWG. A-127203 MECHANICAL COMPONENT LIST
DWG. D-127159 PROTOTYPE DRAWING (S/O 19095, Rev.1)

NUWC
PROJECT NO.
SPECIFICATION NO.
QUOTE NO. 4262
PURCHASE ORDER NO. SNU063-096
EQUIP. NO. RME-01
Document Class No. 1

ALL DIMENSIONS (UNLESS NOTED OTHERWISE)

FRAC.	±1/32
.XX	±.01"
.XXX	±.001
.XXXX	±.0001
ANG.	±.5°

☐ PRELIMINARY NOT FOR CONSTRUCTION
☐ SUBMITTED FOR APPROVAL
☒ CERTIFIED FOR CONSTRUCTION
☐ AS-BUILT

By _____
Date August 21, 2008
LOCHHEAD HAGGERTY ENG. & MFG. CO. LTD.

LOCHHEAD – HAGGERTY
ENGINEERING & MANUFACTURING CO. LTD.
508 Eaton Place, Annacis Island, Delta, B.C.
PHONE: (604) 524-9561 FAX: (604) 524-9563

Electric Boat Corporation
Naval Undersea Warfare Center
Hawthorne, Nevada, USA

15 cu.ft. MERCURY RETORT
ELECTRIC FIRED, 60 kW
(MR-15E) GENERAL ARRANGEMENT

DRN. KM	DATE APR/08	CKD	
SCALE 1:20	P.O. No.	S.O. No. 19145	

1	MOVED MOUNTING HOLE. MOVED THERMOCOUPLE. ADDED EXH. FAN SAMPLING PORT.	KM/CL MAY/08	DWG. No. D-127199 REV 1

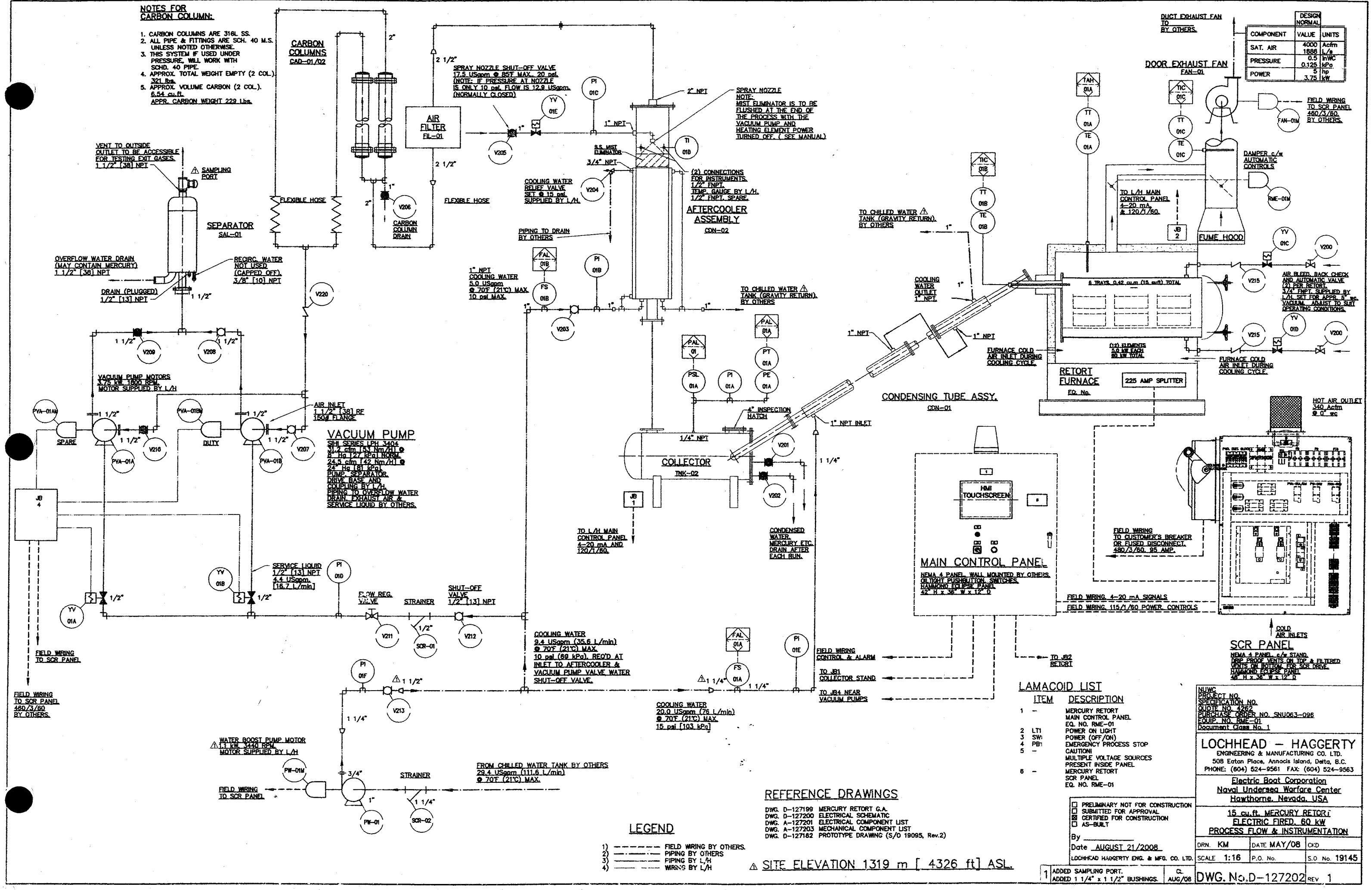

DESIGN NORMAL		
COMPONENT	VALUE	UNITS
SAT. AIR	4000	Acfm
	1888	L/s
PRESSURE	0.5	inWC
	0.125	kPa
POWER	5	hp
	3.75	kW

LOCATION MAP

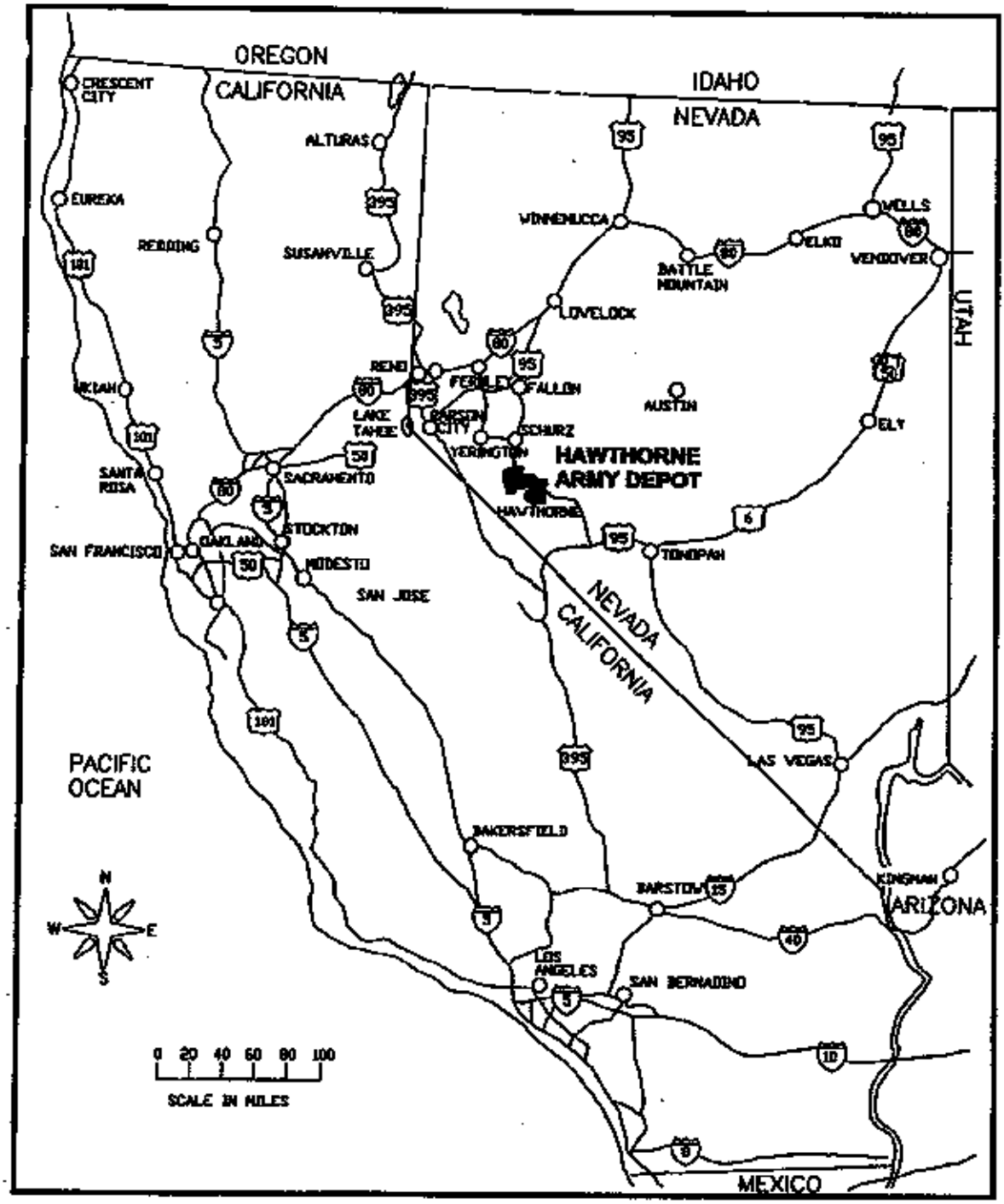

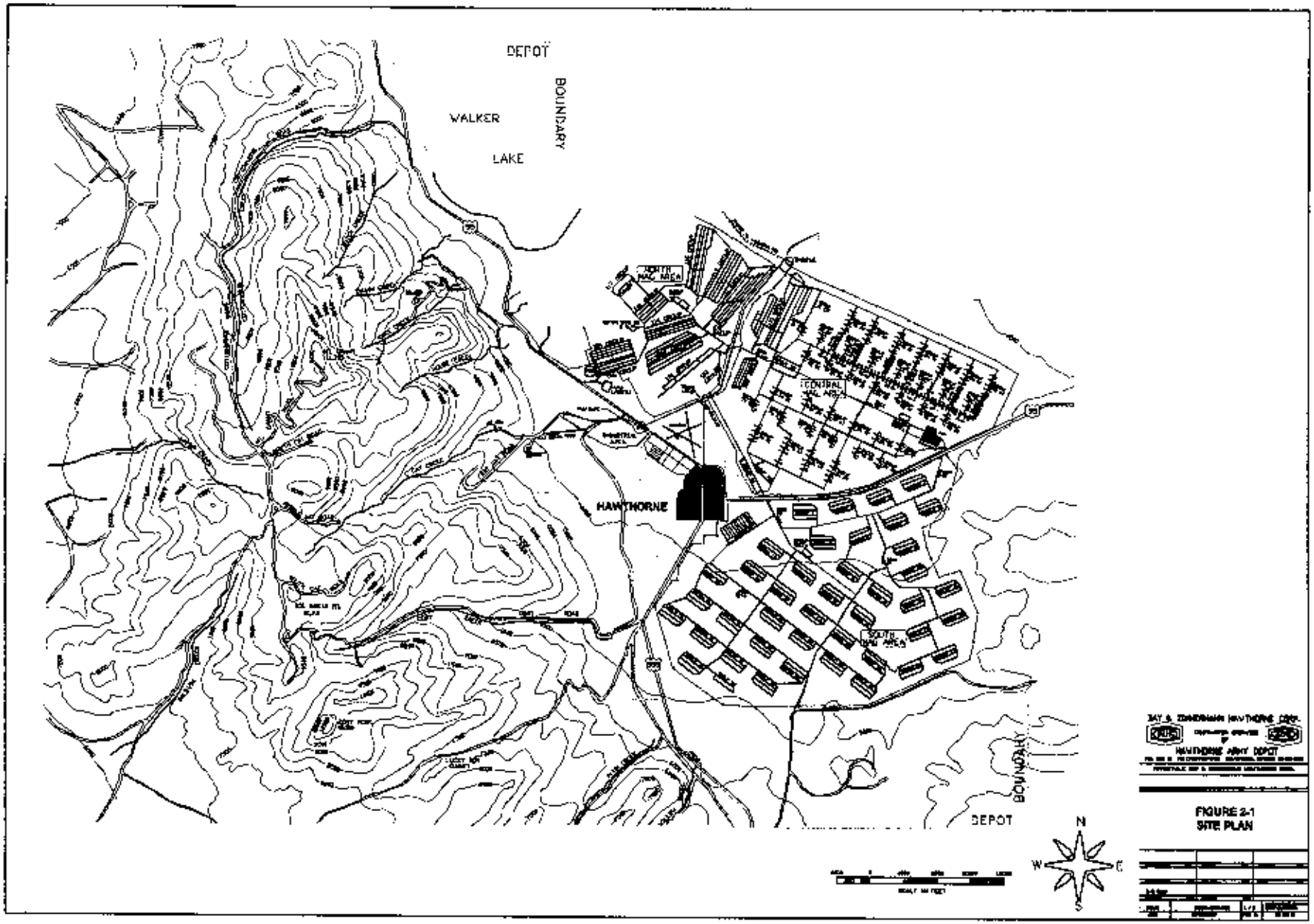
DEPOT
BOUNDARY
WALKER
LAKE
NORTH NAC AREA
CENTRAL NAC AREA
HAWTHORNE
SOUTH NAC AREA
BOUNDARY
DEPOT
N
W
E
S
HAWTHORNE ARMY DEPOT
FIGURE 2-1
SITE PLAN

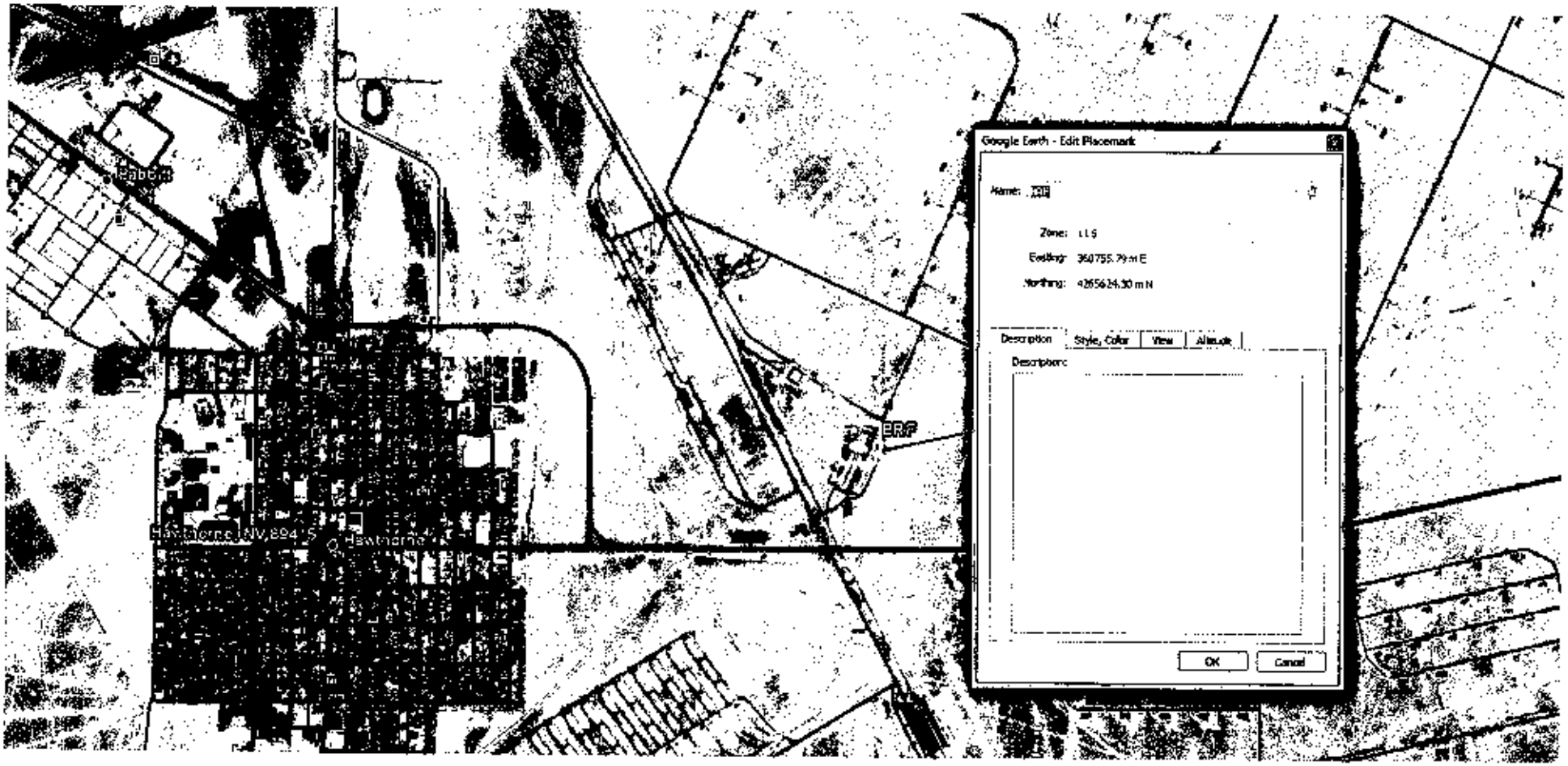
Google Earth - Edit Placemark
Name:
Zone: 11 S
Easting: 360755.79 m E
Northing: 4265624.30 m N
Description
Style, Color
View
Altitude
Description:
OK
Cancel
Hawthorne, NV 894
Hawthorne
ERF

Appendix 9

ENVIRONMENTAL EVALUATION AND DISPERSION MODELING FILES

Please Attach Modeling Files and Supporting Information

NOT APPLICABLE

Appendix 10

OPERATING PERMIT TEMPLATE

Please provide a draft operating permit with appropriate conditions.

An electronic copy of the operating permit template is available upon request.

Appendix 11

APPLICATION CERTIFICATION

Please complete the certification checklist for all forms and information provided in your application submittal. The responsible official must sign and date the application certification found in Appendix 9. ***If the application is signed by a person other than the responsible official, as defined in NAC 445B.156, the application will be returned as incomplete.***

Note: According to NAC 445B.156, **Responsible Official** means:

1. For a corporation:
   - (a) A president;
   - (b) A vice president in charge of a principal business function;
   - (c) A secretary;
   - (d) A treasurer; or
   - (e) An authorized representative of such a person who is responsible for the overall operation of the facility and who is designated in writing by the officer of the corporation and approved in advance by the director.
2. For a partnership or sole proprietorship: a general partner or the proprietor, respectively.
3. For a municipality or a state, federal or other public agency: a ranking elected official or a principal executive officer, including, for a federal agency, a chief executive officer who has responsibility for the overall operations of a principal geographic unit of the agency.
4. For an affected source: the designated representative or his alternate, as defined in 42 U.S. C. § 7651 a (26).

APPLICATION CERTIFICATION

Certification of application content consisting of the following:

(Please check each of the appropriate boxes to indicate the information provided in your application submittal)

General Company Information
☒ General Company Information Form

Emission Unit Application Forms (Appendix 1)
☒ Industrial Process Application Form(s)
☐ Combustion Equipment Application Form(s)
☐ Storage Silos Application Form(s)
☐ Liquid Storage Tank Application Form(s)
☐ Surface Area Disturbance Form(s)

Insignificant Emissions Unit Information (Appendix 2)
☐ Insignificant Emissions Unit Information Form(s)

Facility-Wide Applicable Requirements (Appendix 3)
☒ Table 1 - Facility-Wide Applicable Requirements

Streamlining and Shield Allowance (Appendix 4)
☐ Streamlining Demonstration

Facility-Wide Potential To Emit Tables (Appendix 5)
☒ Table 1 - Facility-Wide Potential To Emit
☒ Table 2 - Insignificant Activities Potential To Emit

Detailed Emissions Calculations (Appendix 6)
☒ Detailed Emissions Calculations Provided

Emissions Cap Information (Appendix 7)
☐ Emissions Cap Information Provided

Process Narrative, Process Flow Diagram, Plot Plan, Map, Dust Control Plan (Appendix 8)
☒ Process Narrative Provided
☒ Flow Diagram Provided
☒ Plot Plan Provided
☒ Map Provided
☐ Dust Control Plan Provided

Dispersion Modelling Files (Appendix 9)
☐ Dispersion Modeling Provided

Draft Operating Permit (Appendix 10)
☐ Draft Operating Permit Provided

Application Certification (Appendix 11)
☒ Application Certification

Additional Information Requested by the Director
☐ Any Additional Information Required by the Director

PLEASE NOTE THE FOLLOWING REQUIREMENTS WHICH APPLY TO PERMIT APPLICANTS DURING THE APPLICATION PROCESS:

A. A permit applicant must submit supplementary facts or corrected information upon discovery [NAC 445B.297.1(b)].
B. A permit applicant is required to provide any additional information which the Director requests in writing within the time specified in the Director's request [NAC 445B.297.1(c)].
C. Submission of fraudulent data or other information may result in prosecution for an alleged criminal offense (NRS 445B.470).

APPLICATION CERTIFICATION (continued)

CERTIFICATION: I certify that based on information and belief formed after reasonable inquiry, the statements contained in this application are true, accurate and complete.

CERTIFICATION: I certify that the proposed modification complies with the criteria for a minor revision set forth in Section 14 of General Company Information of this application.

18 OCT 2011

Signature of Responsible Official

LTC William C. Johnson Jr., Commander, Hawthorne Army Depot

Print or Type Name and Title

October 18, 2011

Date

William C. Johnson, Jr.
Lieutenant Colonel, US Army
Commanding