San Joaquin Valley
AIR POLLUTION CONTROL DISTRICT

DEC 03 2012

Gerardo C. Rios, Chief
Permits Office
Air Division
U.S. EPA - Region IX
75 Hawthorne St
San Francisco, CA 94105

Re: **Proposed Authorities to Construct / Certificate of Conformity (Minor Mod)**
District Facility # S-382
Project # 1121353

Dear Mr. Rios:

Enclosed for your review is the District's engineering evaluation of an application for Authorities to Construct for Occidental of Elk Hills Inc, located at the light oil production stationary source in the western Kern County fields, which has been issued a Title V permit. Occidental of Elk Hills Inc is requesting that a Certificate of Conformity, with the procedural requirements of 40 CFR Part 70, be issued with this project. The project authorizes a new miscible gas injection facility.

Enclosed is the engineering evaluation of this application, a copy of the current Title V permit, and proposed Authorities to Construct # S-382-816-0 through '-829-0 with Certificate of Conformity. After demonstrating compliance with the Authorities to Construct, the conditions will be incorporated into the facility's Title V permit through an administrative amendment.

Please submit your written comments on this project within the 45-day comment period that begins on the date you receive this letter. If you have any questions, please contact Mr. Leonard Scandura, Permit Services Manager, at (661) 392-5500.

Thank you for your cooperation in this matter.

Sincerely,

for David Warner
Director of Permit Services

Enclosures
cc: Richard Edgehill, Permit Services

San Joaquin Valley
AIR POLLUTION CONTROL DISTRICT

DEC 03 2012

Mike Glavin
Occidental of Elk Hills Inc
10900 Stockdale Highway
Bakersfield, CA 93311

Re: Proposed Authorities to Construct / Certificate of Conformity (Minor Mod)
District Facility # S-382
Project # 1121353

Dear Mr. Glavin:

Enclosed for your review is the District's analysis of your application for Authorities to Construct for the facility identified above. You have requested that a Certificate of Conformity with the procedural requirements of 40 CFR Part 70 be issued with this project. The project authorizes a new miscible gas injection facility.

After addressing any EPA comments made during the 45-day comment period, the Authorities to Construct will be issued to the facility with a Certificate of Conformity. Prior to operating with modifications authorized by the Authorities to Construct, the facility must submit an application to modify the Title V permit as an administrative amendment, in accordance with District Rule 2520, Section 11.5.

If you have any questions, please contact Mr. Leonard Scandura, Permit Services Manager, at (661) 392-5500.

Thank you for your cooperation in this matter.

Sincerely,

David Warner
Director of Permit Services

Enclosures
cc: Richard Edgehill, Permit Services

San Joaquin Valley Air Pollution Control District
Authority to Construct Application Review
Miscible Gas Injection facility

Facility Name:	Occidental of Elk Hills Inc	Date:	October 18, 2012
Mailing Address:	10800 Stockdale Highway Bakersfield, CA 93311	Engineer:	Richard Edgehill
		Lead Engineer:	Richard Karrs RWK 10/25/12
Contact Person:	Mike Glavin and Aaron Albracht (Vector Environmental Consultants)		
Telephone:	(661) 412-5222 (MG) and 323-1477 #202 (AA)		
Fax:	(661) 412-5270		
E-Mail:	Mike_Glavin@oxy.com and adavec@vectorenvironmental.com		
Application #(s):	S-382-816-0 through '-829-0		
Project #:	1121353		
Deemed Complete:	May 23, 2012		

I. Proposal

Occidental of Elk Hills Inc (OEHI) has requested Authorities to Construct (ATCs) for the installation of a miscible gas injection (MGI) facility including 3G, 34S, and 35 S well test facilities (ATCs S-382-816-0, '-817-0, and '-818), glycol dehydration unit (ATC S-382-819-0), low pressure gas collection facility (ATCs S-382-820-0 and '-821-0), off-gas booster compressors (ATCs S-382-822-0 and '-823-0), recycle compression facilities (ATCs S-382-824-0 and '-825-0), supply gas compressor facility (ATCs S-382-826-0 and '-827-0), closed drain system (ATC S-382-828-0) and open drain system (ATC S-382- 829-0).

The project triggers offsets. BACT and public notice is not required.

OEHI received their Title V Permit on May 31, 2001. This modification can be classified as a Title V minor modification pursuant to Rule 2520, and can be processed with a Certificate of Conformity (COC). Since the facility has specifically requested that this project be processed in that manner, the 45-day EPA comment period will be satisfied prior to the issuance of the Authority to Construct. OEHI Oilfield must apply to administratively amend their Title V permit.

II. Applicable Rules

Rule 2020	Exemptions (12/20/07)
Rule 2201	New and Modified Stationary Source Review Rule (04/21/11)
Rule 2520	Federally Mandated Operating Permits (6/21/01)
Rule 4001	New Source Performance Standards (4/14/99) – 40 CFR Part 60, Subpart Kb: Standards of Performance for Volatile Organic Liquid Storage Vessels (Including Petroleum Liquid Storage Vessels) for Which Construction, Reconstruction, or Modification Commenced After July

23, 1984 – exempt- open and closed drain tanks are less than 19,813 gallons (472 bbls) in capacity

Subpart KKK—Standards of Performance for Equipment Leaks of VOC From Onshore Natural Gas Processing Plants- not applicable - emissions units do not extract natural gas liquids such as propane, butane, and isobutane

Rule 4002 National Emissions Standards for Hazardous Air Pollutants (5/20/04)) – exempt – facility is not a major HAPs source
Rule 4408 Glycol Dehydration Systems (12/19/02)
Rule 4409 Components at Light Crude Oil Production Facilities, Natural Gas Production Facilities, and Natural Gas Processing Facilities (4/30/05)
Rule 4623 Storage of Organic Liquids (5/19/05)
Rule 4801 Sulfur Compounds (12/17/92)
CH&SC 41700 Health Risk Assessment
CH&SC 42301.6 School Notice
Public Resources Code 21000-21177: California Environmental Quality Act (CEQA)
California Code of Regulations, Title 14, Division 6, Chapter 3, Sections 15000-15387: CEQA Guidelines

III. Project Location

The proposed equipment will be located within OEHI's light oil western stationary source, S-382, at the following locations:

Equipment Locations	Operating Location			
	Qtr	Sec	Twn	Rng
S-382-816, Well Test Facility at Section 3G	NW	3	31S	24E
S-382-817, Well Test Facility at Section 33S	SW	33	30S	24E
S-382-818, Well Test Facility at Section 34S	SW	34	30S	24E
S-382-819, Glycol Dehydration Unit at 34S	SW	34	30S	24E
S-382-820 and '-821, Low Pressure Gas Collection Facility	SW	34	30S	24E
S-382-822 and '-823, Off-Gas Booster Compressors	SW	34	30S	24E
S-382-824 and '-825, Recycle Compressors at 34S	SW	34	30S	24E
S-382-826 and '-827, Injection Compressors at 34S	SW	34	30S	24E
S-382-828, Closed and Open Drain System	SW	34	30S	24E
S-382-829, Emergency Pressure Relief System	SW	34	30S	24E

The following figure shows the general arrangement of miscible gas injection equipment. Detailed schematics and a plot plan are included as **Attachment I**.

General Equipment Arrangement

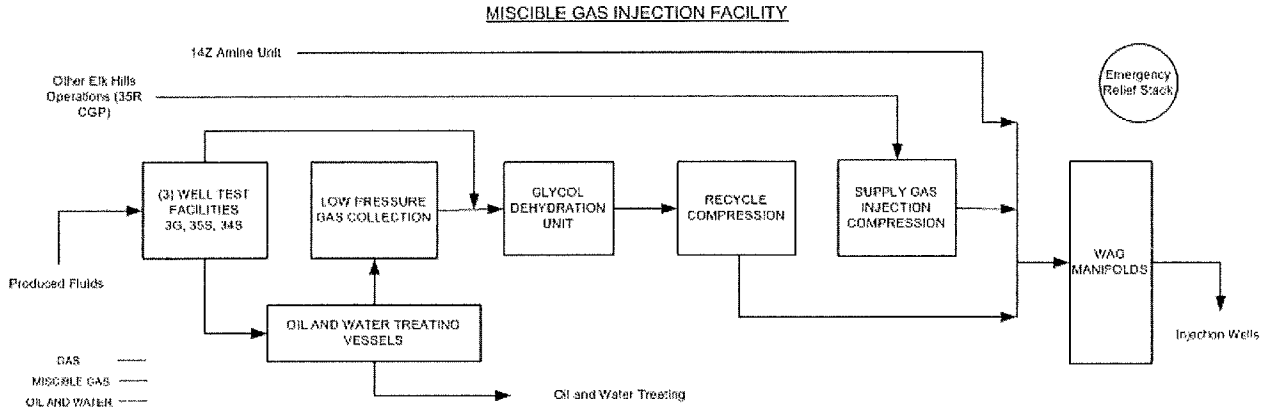

A. Test Facilities

The produced fluids from the wells consist of a mixture of oil, water, and gas (miscible gas and hydrocarbon gas). Produced fluids will be sent to one of three (3) test settings located at Section 3G, 33S and 34S. At the test settings, produced fluids will be routed to either a production gas/liquid separator for initial separation of the gas from the oil and water or to a test separator where the water, gas and oil streams will be separated, and measured individually. In either case, the separated gas will be routed to the gas intake scrubber at 34S for further processing. Produced liquids will be sent to a separate oil and water treatment facility at 34S. An application for equipment at the oil and water treatment facility will be provided under a separate project.

The gas/liquid separators at the well test settings will be controlled by a back pressure controller to maintain the operating pressure of the gas/liquid separator. In the event of an emergency overpressure, overhead gases will be routed to an emergency pressure relief system through a pressure safety valve. The emergency pressure relief system consists of a knockout drum and emergency vent stack. The knockout drum will capture any condensate carryover from the pressure safety valve.

The operation of the equipment at 3G, 33S, and 34S will result in a small amount of fugitive VOC emissions from piping components.

The scrubbers and emergency vents at 3G, 33S, and 34S will only be used during emergencies.

B. Miscible Gas Injection Facility

The main Miscible Gas Injection Facility will consist of the equipment and process systems shown in the table below. A discussion of each of the process systems along with the estimated emissions is provided in the following sections.

The equipment is not located within 1,000 feet of the outer boundary of a K-12 school. Therefore, the public notification requirement of California Health and Safety Code 42301.6 is not applicable to this project.

IV. Process Description

The following sections provide a detailed discussion of each system, support equipment from other existing systems, and the expected emissions. The following table provides a brief summary of the process systems along with their primary function.

Description of Process Systems

Process System		Description
3 Well Test Facilities (3G, 33S, and 34S) S-382-816, '-817, and '-818		Production from the wells will be routed to a well test facility where the produced gas will be separated from the produced oil and water. Each site will consist of a test separator, a production separator, and an emergency pressure relief system.
34S Miscible Gas Intake Facility	Glycol Dehydration Unit S-382-819	Produced gas will be dehydrated before being recompressed in the recycle compression system. The dehydration unit is fully enclosed and complies with Rule 4408 VOC control requirements.
	Low Pressure Gas Collection Facility S-382-820 and '-821	Electric compressors K-158 and K-159 will collect gas from vessels and tanks operating near atmospheric pressure and discharge the gas to the off-gas booster compressors or to the glycol dehydration inlet.
	Off-Gas Booster Compressors S-382-822 and '-823	Electric compressors K-160 and K-161 will receive gas from intermediate pressure oil/water production vessels or the low pressure collection compressors and discharge to the glycol dehydration inlet.
	Recycle Compression Facilities S-382-824 and '-825	Electric compressors K-150 and K-151 will be used for recycling and recompression of recovered gas from the Miscible Gas Injection Facility along with make-up gas from Elk Hills operations.
	Supply Gas Injection Facilities S-382-826 and '-827	Electric compressors K-156 and K-157 will be used to compress supply gas from Elk Hills operations for injection into the miscible injection wells.
	Closed and Open Drain Systems S-382-828 and '-829	The MGI Facility will include a closed and open drain system to collect fluids from miscellaneous operations and process equipment such as compressors, knockout vessels, and small separators.
	Emergency Pressure Relief System S-382-828	System which will be used to route gases away from the plant during an emergency pressure relief event.

34S Miscible Gas Injection Facility Summary

ATC	Equipment Title
S-382-819-0	Glycol Contactor, Exchanger, Coalescers, Inlet Scrubber
	Glycol Reboiler, Vessel, Exchanger, Pump, Filter, Condenser
S-382-820-0	LP Gas Collection Skid 1 Scrubbers, Compressor, Fan K-158
S-382-821-0	LP Gas Collection Skid 2 Scrubbers, Compressor, Fan K-159
S-382-822-0	Off Gas Compressor Skid Scrubbers, Compressor, Fan K-160
S-382-823-0	Off Gas Compressor Skid 2 K-161 scrubbers, Compressor, Fan
S-382-824-0	Recycle Compressor K-150 Skid 1 Scrubber, Compressor
S-382-825-0	Recycle Compressor Skid 2 K-151 Header, Scrubber, Compressor
S-382-826-0	Supply Gas Skid 1 K-156 Header, Scrubbers, Compressor, Coolers
S-382-827-0	Supply Gas Skid 2 K-157 Scrubbers, Compressor, Coolers
S-382-828-0	Closed Drain System Tank and Piping
	Emergency Pressure Relief System Vent and Piping
	Emergency Pressure Relief System Knockout Drum
S-382-829-0	Open Drain System Tank and Piping

1. Glycol Dehydration System

Gas from the test separation facilities will be piped to a new glycol dehydration unit (S-382-819) where the incoming gas will be dehydrated. The glycol system consists of a produced gas scrubber, a tower for gas/glycol contact and the glycol regeneration system. The overhead gas from the glycol flash separator and vent condenser scrubber will be captured and returned to the process. The dehydrated gas will then be combined with make-up gas from Elk Hills, compressed, and reinjected back into the formation.

Heat required for the regeneration of the glycol will be provided by a 1.45 MMBTU/hr natural gas fired reboiler. The burner used by the dehydration unit is exempt because the burner is rated at less than 5 MMBTU/hr and is fueled on PUC quality natural gas.

2. Low Pressure Gas Collection System

OEHI will be installing a low pressure gas collection system to collect vapors from vessels and tanks operating near atmospheric pressure. The system consists of two electric compressors K-158 and K-159 (S-382-820 and '-821) rated at 100 hp each and auxiliary vessels and coolers. The unit will discharge the gas either to the off-gas booster compressors or to the inlet of the glycol dehydration system.

3. Off-Gas Booster Compressors

The MGI Facility requires a booster collection system consisting of two electric compressors K-160 and K-161 (S-382-822 and '-823) to collect vapors from the low pressure gas system and vessels operating at intermediate pressure. The two electric compressors K-160 and K-161 are rated at 750 hp each. The compressors will boost the pressure up to the inlet pressure of the gas dehydration unit.

4. Recycle Compression System

Dehydrated gas from the TEG treating unit will then be combined with make-up gas from Elk Hills, compressed to injection pressure and diverted to the injection manifolds at the 3G, 33S, or 34S facilities for reinjection back into the formation. Compression required for recycling the miscible gas will be provided using two new electric compressors K-150 and K-151 (S-382-824 and '-825) rated at 4,250 hp each.

5. Supply Gas Compression System

Make-up gas from Elk Hills will be compressed to injection pressure, combined with the recycle gas, and returned to the well injection manifolds for reinjection. Compression required for the supply gas reinjection will be provided using two new electric compressors K-156 and K-157 (S-382-826 and '-827) rated at 1,100 hp each. Operation of the compressors will result in a small amount of fugitive VOC emissions.

6. Closed and Open Drain Systems

The MGI Facility will include a closed drain system and an open drain system to collect fluids from miscellaneous operations and process equipment such as compressors, vessels, and small separators.

The closed and open drain systems (S-382-828 and '-829) will require two new 1,000 bbl vertical fixed roof tanks. Overhead vapors from the tanks will be routed to the intake of the low pressure gas collection system. Pumps for the systems will return collected fluids to the oil and water treating facility.

Closed and open drain system emissions consist of fugitive VOC emissions from piping components.

7. Emergency Vent Equipment

The MGI Facility will include an emergency pressure relief system (S-382-828) which will be used to route gases away from the facility during an emergency event. The system only serves as a conduit and is not a source of emissions, except for a small amount of fugitive VOC emissions from piping components. Any liquids captured in the scrubber will be piped to the closed drain system.

C. Miscible Gas Oil and Water Treating Facility

The produced oil and water from the MGI production wells will be routed to a new oil and water treatment facility located adjacent to the gas treating facility. Recovered crude oil will be sold through the existing LACT (lease automated custody transfer) unit; produced water will be treated and either reinjected or returned to Elk Hills produced water system for other use or disposal. An application for ATCs for the oil and water treating facility equipment will be provided under separate cover.

V. Equipment Listing

S-382-816-0: 3G WELL TEST FACILITY WITH TWO GAS/LIQUID SEPARATORS AND EMERGENCY KNOCKOUT DRUM

S-382-817-0: 33S WELL TEST FACILITY WITH TWO GAS/LIQUID SEPARATORS AND EMERGENCY KNOCKOUT DRUM

S-382-818-0: 34S WELL TEST FACILITY WITH TWO GAS/LIQUID SEPARATORS AND EMERGENCY KNOCKOUT DRUM

S-382-819-0: 1.45 MMBTU/HR GLYCOL REBOILER, GLYCOL CONTACTOR, CONDENSER, EXCHANGERS, PUMPS, FILTERS

S-382-820-0: K-158 GAS COLLECTION SKID INCLUDING SCRUBBERS, COMPRESSOR, AND COOLER

S-382-821-0: K-159 GAS COLLECTION SKID INCLUDING SCRUBBERS, COMPRESSOR, AND COOLER

S-382-822-0K-160 BOOSTER COMPRESSOR SKID INCLUDING SCRUBBERS, COMPRESSOR, AND COOLER

S-382-823-0: K161 BOOSTER COMPRESSOR SKID INCLUDING SCRUBBERS, COMPRESSOR, AND COOLER

S-382-824-0: K-150 RECYCLE COMPRESSOR SKID INCLUDING HEADER, SCRUBBERS, COOLERS

S-382-825-0: K-151 RECYCLE COMPRESSOR SKID INCLUDING SCRUBBERS AND COOLERS

S-382-826-0: K-156 COMPRESSOR SKID INCLUDING SCRUBBERS, COOLERS, AND KNOCKOUT DRUM

S-382-827-0: K-157 COMPRESSOR SKID INCLUDING SCRUBBERS AND COOLERS

S-382-828-0: CLOSED DRAIN SYSTEM, PIPING AND 1000 BBL TANK INCLUDING EMERGENCY RELIEF SYSTEM, KNOCKOUT DRUM

S-382-829-0: OPEN DRAIN SYSTEM, PIPING, AND 1000 BBL TANK

VI. Emission Control Technology Evaluation

S382-819 Glycol Dehydration Unit

The glycol dehydration unit is electrically-driven with no process vents (closed system). No emissions are expected.

Fugitive Emissions (all ATCs)
Leaks from fugitive emissions components will be controlled by implementation of an I&M program consistent with the requirements of Rule 4409 and NSPS Subpart KKK. Because emissions are calculated using EPA Average Leak Rate equations with a leak threshold of 2000 ppmv (please refer to emissions factor below), leaks exceeding 2000 ppmv are a violation of the permit as stated in the following condition:

A leak-free condition is defined as a condition without a gas leak or a liquid leak. A gas leak is defined as a reading in excess of 2,000 parts per million by volume (ppmv), as methane, above background on a portable hydrocarbon detection instrument that is calibrated to methane in accordance with the procedures specified in EPA Test Method 21. A liquid leak is defined as the dripping of organic liquid at a rate more than 3 drops per minute. A gas or liquid leak is a violation of this permit and shall be reported as a deviation. [District Rule 2201] Y

VII. General Calculations

A. Assumptions

- Facility operates 24 hr/day 365 days per year.
- The VOC content of fugitive emissions is 100% by weight.
- The scrubbers and emergency vents at 3G, 33S, and 34S will only be used during emergencies. Therefore, emissions of VOC from the knockout drum listed on S-382-828 (during emergency only) are not included in offsets calculations (Rule 2201 Section 4.6.2). Emissions from the 3G, 33S, and 34S (S-382-816 through '-818) vent scrubbers (S-382-816 through '-818) and 34S emergency vent scrubber horizontal

tank (S-382-828-0) are based on a liquid with a Reid Vapor Pressure of 5 psia with no working losses. The Tanks 4.0 calculations are included in **Attachment II**.

- The glycol burner used by the dehydration unit is exempt by District Rule 2020 Section 6.21 as the burner will be fired on PCU quality natural gas with a sulfur content not exceeding 1.0 gr S/100 scf and containing no more than 5% by weight hydrocarbons heavier than butane.

B. Emission Factors

Fugitive VOC emissions have been quantified for Average Leak Rate (ALR) equations with a leak threshold (other equipment) in EPA, "Protocol for Estimating Leak Emissions" (EPA – 453/R-95-017, November 1995) Table 5-7, "Equation Relating Average Leak Rate to Fraction Leaking at Oil and Gas Production Operation Units" (**Attachment II**). The leak threshold is 2000 ppm for all emissions units except the closed and open drain tanks S-382-828 which have a leak threshold of 10,000 ppmv. In calculating the DEL associated with fugitive emissions, the "LKFRAC" term in these equations, representing the number of allowable leaks, was assumed to be zero.

C. Calculations

Emissions of VOCs for each well test setting are as follows:

1. Pre-Project Potential to Emit (PE1)

Since this is a new emissions unit, PE1 = 0 for all pollutants.

2. Post Project Potential to Emit (PE2)

Test Facilities

Equipment Description		VOC Emissions (lb/day)	VOC Emissions (lb/yr)
S-382-816, 3G	Two Gas/Liquid Separators	0.455	166.16
	Emergency Scrubber and Vent (Breathing Losses)	0.102	37.360
	Total	0.6	204
S-382-817, 33S	Two Gas/liquid Separators	0.455	166.16
	Emergency Vent System (Breathing Loss Emissions)	0.102	37.360
	Total	0.6	204
S-382-818, 34S	Two Gas/Liquid Separators	0.455	166.16
	Emergency Vent System (Breathing Loss Emissions)	0.102	37.360
	Total	0.6	204
Emissions Total		**1.8**	**612**
Permitted Emissions Subject to Offsets (Per Rounding Policy)		**1.8**	**612**

*Per SJVAPCD rounding policy APR-1130, for the purposes of determining whether New and Modified Source Review (NSR) rule requirements are triggered, increases in maximum daily permitted emissions of 0.5 lb/day or less are rounded to zero.

34S MGI Facility

ATC	Equipment Title	VOC Emissions		
		Emission Unit lb/day	Permit Unit lb/day	Permit Unit lb/year
S-382-819-0	Inlet Scrubber, Coalescer, Glycol Contactor, Exchanger	0.404	0.9*	345*
	Glycol Reboiler, Vessel, Exchanger, Pump, Filter, Condenser	0.542		
S-382-820-0	LP Gas Collection Skid 1 Scrubbers, Compressor, Fan K-158	0.083	0.1	30
S-382-821-0	LP Gas Collection Skid 2 Scrubbers, Compressor, Fan K-159	0.082	0.1	30
S-382-822-0	Off Gas Compressor Skid Scrubbers, Compressor, Fan K-160	0.290	0.3	106
S-382-823-0	Off Gas Compressor Skid 2 K-161 scrubbers, Compressor, Fan	0.290	0.3	106
S-382-824-0	Recycle Compressor K-150 Skid 1 Scrubber, Compressor	0.406	0.4	148
S-382-825-0	Recycle Compressor Skid 2 K-151 Header, Scrubber, Compressor	0.374	0.4	137
S-382-826-0	Supply Gas Skid 1 K-156 Header, Scrubbers, Compressor, Coolers	0.272	0.3	99
S-382-827-0	Supply Gas Skid 2 K-157 Scrubbers, Compressor, Coolers	0.233	0.2	85
S-382-828-0	Closed Drain System Tank and Piping	0.090	0.6*	235*
	Emergency Pressure Relief System Vent and Piping	0.048		
	Emergency Pressure Relief System Knockout Drum	0.504**		
S-382-829-0	Open Drain System Tank and Piping	0.090	0.1	33
	Total VOCs from Fugitive Emission Sources		3.7	1,354

PE2

Permit unit	VOC PE2 (lb/day)	VOC PE2 (lb/yr)
S-382-816	0.6	204
S-382-817	0.6	204
S-382-818	0.6	204
S-382-819	0.9	345
S-382-820	0.1	30
S-382-821	0.1	30
S-382-822	0.3	106
S-382-823	0.3	106
S-382-824	0.4	148
S-382-825	0.4	137
S-382-826	0.3	99
S-382-827	0.2	85
S-382-828	0.6	235
S-382-829	0.1	33
Total	5.5	1966

The project results in 1,966 lb/yr increase in annual VOC emissions. Assuming this is 100% methane (CH_4), which has a GWP for methane of 23 lb $CO2_e$/lb CH_4, the increase is 45,218 lb CO2e/yr (23 tons CO2e/yr) which is much less than the threshold of 230 mtons CO2e/yr.

The emissions profiles are included in **Attachment III**.

3. Pre-Project Stationary Source Potential to Emit (SSPE1)

Pursuant to District Rule 2201, the SSPE1 is the Potential to Emit (PE) from all units with valid Authorities to Construct (ATC) or Permits to Operate (PTO) at the Stationary Source and the quantity of Emission Reduction Credits (ERC) which have been banked since September 19, 1991 for Actual Emissions Reductions (AER) that have occurred at the source, and which have not been used on-site.

Since facility emissions are already above the Offset and Major Source Thresholds for VOC emissions, SSPE1 calculations are not necessary.

4. Post Project Stationary Source Potential to Emit (SSPE2)

Pursuant to District Rule 2201, the SSPE2 is the PE from all units with valid ATCs or PTOs at the Stationary Source and the quantity of ERCs which have been banked since September 19, 1991 for AER that have occurred at the source, and which have not been used on-site.

Since facility emissions are already above the Offset and Major Source Thresholds for VOC emissions, SSPE2 calculations are not necessary.

5. Major Source Determination

Pursuant to District Rule 2201, a Major Source is a stationary source with a SSPE2 equal to or exceeding one or more of the following threshold values. However, for the purposes of determining major source status, the SSPE2 shall not include the quantity of ERCs which have been banked since September 19, 1991 for AER that have occurred at the source, and which have not been used on-site." This source is an existing Major Source for VOC emissions and will remain a Major Source for VOC. No change in other pollutants are proposed or expected as a result of this project.

6. Baseline Emissions (BE)

The BE calculation (in lbs/year) is performed pollutant-by-pollutant for each unit within the project to calculate the QNEC, and if applicable, to determine the amount of offsets required.

Pursuant to District Rule 2201, BE = PE1 for:

- Any unit located at a non-Major Source,
- Any Highly-Utilized Emissions Unit, located at a Major Source,
- Any Fully-Offset Emissions Unit, located at a Major Source, or
- Any Clean Emissions Unit, located at a Major Source.

otherwise,

BE = Historic Actual Emissions (HAE), calculated pursuant to District Rule 2201.

<u>S-382-816 through '-829:</u>

Since these are a new emissions unit, BE = PE1 = 0 for all pollutants.

7. SB 288 Major Modification

SB 288 Major Modification is defined in 40 CFR Part 51.165 as "any physical change in or change in the method of operation of a major stationary source that would result in a significant net emissions increase of any pollutant subject to regulation under the Act."

Since this source is not included in the 28 specific source categories specified in 40 CFR 51.165, the, increases in fugitive emissions are not included in the SB 288 Major Modification calculation.

8. Federal Major Modification

District Rule 2201 states that a Federal Major Modification is the same as a "Major Modification" as defined in 40 CFR 51.165 and part D of Title I of the CAA.
Since this source is not included in the 28 specific source categories specified in 40 CFR 51.165, the increases in fugitive emissions are not included in the Federal Major Modification determination.

9. Quarterly Net Emissions Change (QNEC)

The QNEC is calculated solely to establish emissions that are used to complete the District's PAS emissions profile screen. As the permit units are new QNEC = PE2/4.

VIII. Compliance

Rule 2020 Exemptions

The glycol dehydrator burner is rated at less than 5 MMBTU/hr and combusts only PUC quality natural gas with a sulfur content not exceeding 1.0 gr S/100 scf and no more than 5% by weight hydrocarbons heavier than butane. Therefore, the burner emissions are exempt from District permit requirements pursuant to Section 6.1 of the rule.

Rule 2201 New and Modified Stationary Source Review Rule

A. Best Available Control Technology (BACT)

1. BACT Applicability

BACT requirements are triggered on a pollutant-by-pollutant basis and on an emissions unit-by-emissions unit basis. Unless specifically exempted by Rule 2201, BACT shall be required for the following actions*:

a. Any new emissions unit with a potential to emit exceeding two pounds per day,
b. The relocation from one Stationary Source to another of an existing emissions unit with a potential to emit exceeding two pounds per day,
c. Modifications to an existing emissions unit with a valid Permit to Operate resulting in an AIPE exceeding two pounds per day, and/or
d. Any new or modified emissions unit, in a stationary source project, which results in an SB 288 Major Modification or a Federal Major Modification, as defined by the rule.

*Except for CO emissions from a new or modified emissions unit at a Stationary Source with an SSPE2 of less than 200,000 pounds per year of CO.

a. New emissions units – PE > 2 lb/day

As seen in Section VII.C.2 above, the applicant is proposing emissions units associated with well testing and MGI equipment with only VOC emissions. However, none of the emissions units has a PE greater than 2 lb/day. Therefore BACT is not triggered.

b. Relocation of emissions units – PE > 2 lb/day

As discussed in Section I above, there are no emissions units being relocated from one stationary source to another; therefore BACT is not triggered.

c. Modification of emissions units – AIPE > 2 lb/day

As discussed in Section I above, there are no modified emissions units associated with this project. Therefore BACT is not triggered.

d. SB 288/Federal Major Modification

As discussed in Section VII.C.7 above, this project does not constitute an SB 288 and/or Federal Major Modification for NO_X emissions. Therefore BACT is not triggered for any pollutant.

B. Offsets

1. Offset Applicability

Offset requirements shall be triggered on a pollutant by pollutant basis and shall be required if the SSPE2 equals to or exceeds the offset threshold levels in Table 4-1 of Rule 2201.

The SSPE2 is compared to the offset thresholds in the following table.

Offset Determination (lb/year)					
	NO_X	SO_X	PM_{10}	CO	VOC
SSPE2	>20,000	>54,750	>29,200	>200,000	>20,000
Offset Thresholds	20,000	54,750	29,200	200,000	20,000
Offsets calculations required?	Yes	Yes	Yes	Yes	Yes

2. Quantity of Offsets Required

As seen above, the SSPE2 is greater than the offset thresholds for NO_X SOx, PM10, CO, and VOC; therefore offset calculations will be required for this project.

Per Sections 4.7.1 and 4.7.3, the quantity of offsets in pounds per year for NO_X is calculated as follows for sources with an SSPE1 greater than the offset threshold levels before implementing the project being evaluated.

Offsets Required (lb/year) = $(\Sigma[PE2 - BE] + ICCE) \times DOR$, for all new or modified emissions units in the project,

Where,
PE2 = Post Project Potential to Emit, (lb/year)
BE = Baseline Emissions, (lb/year)
ICCE = Increase in Cargo Carrier Emissions, (lb/year)
DOR = Distance Offset Ratio, determined pursuant to Section 4.8

BE = Pre-project Potential to Emit for:

- Any unit located at a non-Major Source,
- Any Highly-Utilized Emissions Unit, located at a Major Source,
- Any Fully-Offset Emissions Unit, located at a Major Source, or
- Any Clean Emissions Unit, Located at a Major Source.

otherwise,

BE = Historic Actual Emissions (HAE)

The facility is proposing to install new emissions units; therefore Baseline Emissions are equal to zero. Also, there are no increases in cargo carrier emissions. Offsets can be determined as follows:

Offsets Required (lb/year) = PE2 x DOR

Offsets Required (lb/year)

Permit unit	PE2 (lb/day)*	PE2 (lb/yr)
S-382-816	0.6 – 0.102 = 0.5~0	204
S-382-817	0.6 – 0.102 = 0.5~0	204
S-382-818	0.6 – 0.102 = 0.5~0	204
S-382-819	**0.9**	**345**
S-382-828	0.6- 0.504 = 0.1~0	235
Total offsets requirement		345

*District policy APR 1130 states that IPEs less than or equal to 0.5 lb/day to be set to zero for purposes of providing emission offsets. This change allows an IPE that rounds to 0.5 lb/day, e.g. less than 0.54 lb/day, to be set to zero for purposes of providing emission offsets.
Fugitive emissions associated with emergency venting equipment are not included in the offsets calculation

VOC:

S-382-819

PE2 = 345 lb VOC/yr

The DOR = 1.0, the amount of VOCs ERCs that need to be withdrawn is:

Offsets Required (lb/year) = 345 x 1.0
= 345-VOC/year

The quarterly ERC required is as follows:

DOR = 1.0

Pollutant	1st Quarter	2nd Quarter	3rd Quarter	4th Quarter
NOx	86	86	86	86

The applicant has stated that the facility plans to use ERC certificate S-1719-1 to offset the increases in VOC emissions associated with this project. The ERCs have been reserved as indicated in the table below.

Reserved in PAS

ERC #	1st Qtr	2nd Qtr	3rd Qtr	4th Qtr
S-1719-1	86	86	86	86

Proposed Rule 2201 (offset) Conditions:

S-382-819

Prior to operating equipment under this Authority to Construct, permittee shall surrender emission reduction credits for the following quantities of emissions: VOC: 86 lb/quarter. Offsets include the applicable offset ratio specified in Section 4.8 of Rule 2201 (as amended 4/21/11). [District Rule 2201] Y

ERC Certificate Number S-1719-1 (or certificate split from this certificates) shall be used to supply the required offsets, unless a revised offsetting proposal is received and approved by the District, upon which this Authority to Construct shall be reissued, administratively specifying the new offsetting proposal. Original public noticing requirements, if any, shall be duplicated prior to reissuance of this Authority to Construct. [District Rule 2201] Y

C. Public Notification

1. Applicability

Public noticing is required for:

a. New Major Sources, Federal Major Modifications, and SB 288 Major Modifications,
b. Any new emissions unit with a Potential to Emit greater than 100 pounds during any one day for any one pollutant,
c. Any project which results in the offset thresholds being surpassed, and/or
d. Any project with an SSIPE of greater than 20,000 lb/year for any pollutant.

a. New Major Sources, Federal Major Modifications, and SB 288 Major Modifications

New Major Sources are new facilities, which are also Major Sources. Since this is not a new facility, public noticing is not required for this project for New Major Source purposes.

As demonstrated in VII.C.7, this project does not constitute an SB 288 or Federal Major Modification; therefore, public noticing for SB 288 or Federal Major Modification purposes is not required.

b. PE > 100 lb/day

Applications which include a new emissions unit with a PE greater than 100 pounds during any one day for any pollutant will trigger public noticing requirements. As seen in Section VII.C.2 above, this project does not include a new emissions unit which has daily emissions greater than 100 lb/day for any pollutant, therefore public noticing for PE > 100 lb/day purposes is not required.

c. Offset Threshold

The SSPE1 and SSPE2 are compared to the offset thresholds in the following table.

Offset Thresholds				
Pollutant	SSPE1 (lb/year)	SSPE2 (lb/year)	Offset Threshold	Public Notice Required?
NO_X	>20,000 lb/year	>20,000 lb/year	20,000 lb/year	No
SO_X	>54,750 lb/year	>54,750 lb/year	54,750 lb/year	No
PM_{10}	>29,200 lb/year	>29,200 lb/year	29,200 lb/year	No
CO	>200,000 lb/year	>200,000 lb/year	200,000 lb/year	No
VOC	>20,000 lb/year	>20,000 lb/year	20,000 lb/year	No

As detailed above, there were no thresholds surpassed with this project; therefore public noticing is not required for offset purposes.

d. SSIPE > 20,000 lb/year

Public notification is required for any permitting action that results in a SSIPE of more than 20,000 lb/year of any affected pollutant. According to District policy, the SSIPE = SSPE2 – SSPE1. The SSIPE is compared to the SSIPE Public Notice thresholds in the following table.

SSIPE Public Notice Thresholds					
Pollutant	SSPE2 (lb/year)	SSPE1 (lb/year)	SSIPE (lb/year)	SSIPE Public Notice Threshold	Public Notice Required?
NO_x	>20,000 lb/year	>20,000 lb/year	0	20,000 lb/year	No
SO_x	>54,750 lb/year	>54,750 lb/year	0	20,000 lb/year	No
PM_{10}	>29,200 lb/year	>29,200 lb/year	0	20,000 lb/year	No
CO	>200,000 lb/year	>200,000 lb/year	0	20,000 lb/year	No
VOC	>20,000 lb/year	>20,000 lb/year	1966	20,000 lb/year	No

As demonstrated above, the SSIPEs for all pollutants were less than 20,000 lb/year; therefore public noticing for SSIPE purposes is not required.

2. Public Notice Action

As discussed above, this project will not result in emissions, for any pollutant, which would subject the project to any of the noticing requirements listed above. Therefore, public notice will not be required for this project.

D. Daily Emission Limits (DELs)

DELs and other enforceable conditions are required by Rule 2201 to restrict a unit's maximum daily emissions, to a level at or below the emissions associated with the maximum design capacity. The DEL must be contained in the latest ATC and contained in or enforced by the latest PTO and enforceable, in a practicable manner, on a daily basis. DELs are also required to enforce the applicability of BACT.

S-382-816 through -829 (Fugitive Emissions only)

Permittee shall maintain with the permit accurate fugitive component counts and resulting emissions calculated using (ALR) equations for a 2,000 ppmv leak threshold included in EPA, "Protocol for Estimating Leak Emissions" (EPA - 453/R-95-017, November 1995). [District Rule 2201] Y

A leak-free condition is defined as a condition without a gas leak or a liquid leak. A gas leak is defined as a reading in excess of 2,000 parts per million by volume (ppmv), as methane, above background on a portable hydrocarbon detection instrument that is calibrated to methane in accordance with the procedures specified in EPA Test Method 21. A liquid leak is defined as the dripping of organic liquid at a rate more than 3 drops per minute. A gas or liquid leak is a violation of this permit and shall be reported as a deviation. [District Rule 2201] Y

VOC fugitive emissions shall not exceed XX lb/day. [District Rule 2201] Y

S-382-828 and '-829 (Open and Closed Drain Tanks)

Permittee shall maintain with the permit accurate fugitive component counts and resulting emissions for the tank calculated using (ALR) equations for a 10,000 ppmv leak threshold included in EPA, "Protocol for Estimating Leak Emissions" (EPA - 453/R-95-017, November 1995). [District Rule 2201] Y

Permittee shall maintain with the permit accurate fugitive component counts and resulting emissions for the tank vapor control system calculated using (ALR) equations for a 2,000 ppmv leak threshold included in EPA, "Protocol for Estimating Leak Emissions" (EPA - 453/R-95-017, November 1995). [District Rule 2201] Y

Storage tank and all piping, valves, and fittings shall be constructed and maintained in a leak-free condition. [District Rules 2201 and 4623] Y

A leak-free condition is defined as a condition without a gas leak or a liquid leak. A gas leak is defined as a reading in excess of 10,000 parts per million by volume (ppmv) for the tank and 2,000 parts per million by volume (ppmv) for the tank vapor control system , as methane, above background on a portable hydrocarbon detection instrument that is calibrated to methane in accordance with the procedures specified in EPA Test Method 21. A liquid leak is defined as the dripping of organic liquid at a rate more than 3 drops per minute. A gas or liquid leak is a violation of this permit and shall be reported as a deviation. [District Rules 2201 and 4623] Y

VOC fugitive emissions in piping from tank to vapor control system trunk line shall not exceed XXX lb/day. [District Rule 2201] Y

VOC fugitive emissions associated with tank shall not exceed XXX lb/day. [District Rule 2201] Y

E. Compliance Assurance

1. Source Testing

Pursuant to District Policy APR 1705, source testing is not required to demonstrate compliance with Rule 2201.

2. Monitoring

S-382-816 through '-829

Permittee shall maintain accurate component count and emissions calculated using the Average Leak Rate (ALR) equations for a 2,000 ppmv leak threshold included in EPA, "Protocol for Estimating Leak Emissions" (EPA - 453/R-95-017, November 1995). [District Rule 2201] Y

3. Recordkeeping

S-382-816 through '-829

The following permit condition will be listed on permit as follows:

{2983} All records shall be maintained and retained on-site for a minimum of five (5) years, and shall be made available for District inspection upon request. [District Rules 1070] N

4. Reporting

S-2234-245 through '-249

A leak-free condition is defined as a condition without a gas leak or a liquid leak. A gas leak is defined as a reading in excess of 2,000 parts per million by volume (ppmv), as methane, above background on a portable hydrocarbon detection instrument that is calibrated to methane in accordance with the procedures specified in EPA Test Method 21. A liquid leak is defined as the dripping of organic liquid at a rate more than 3 drops per minute. A gas or liquid leak is a violation of this permit and shall be reported as a deviation. [District Rule 2201] Y

Rule 2520 Federally Mandated Operating Permits

This facility is subject to this Rule, and has received their Title V Operating Permit. The proposed modification is a Minor Modification to the Title V Permit.

In accordance with Rule 2520, these modifications:

1. Do not violate requirements of any applicable federally enforceable local or federal requirement;
2. Do not relax monitoring, reporting, or recordkeeping requirements in the permit and are not significant changes in existing monitoring permit terms or conditions;
3. Do not require or change a case-by-case determination of an emission limitation or other standard, or a source-specific determination for temporary sources of ambient impacts, or a visibility or increment analysis;
4. Do not seek to establish or change a permit term or condition for which there is no corresponding underlying applicable requirement and that the source has assumed to

avoid an applicable requirement to which the source would otherwise be subject. Such terms and conditions include:

a. A federally enforceable emission cap assumed to avoid classification as a modification under any provisions of Title I of the Federal Clean Air Act; and
b. An alternative emissions limit approved pursuant to regulations promulgated under section 112(i)(5) of the Federal Clean Air Act; and

5. Are not Title I modifications as defined in District Rule 2520 or modifications as defined in section 111 or 112 of the Federal Clean Air Act; and
6. Do not seek to consolidate overlapping applicable requirements.

As discussed above, the facility has applied for a Certificate of Conformity (COC). Therefore, the facility must apply to modify their Title V permit with an administrative amendment, prior to operating with the proposed modifications. Continued compliance with this rule is expected. The facility may construct/operate under the ATC upon submittal of the Title V administrative amendment/minor modification application.

Rule 4101 Visible Emissions

Per Section 5.0, no person shall discharge into the atmosphere emissions of any air contaminant aggregating more than 3 minutes in any hour which is as dark as or darker than Ringelmann 1 (or 20% opacity). As the glycol reboiler is fired solely on natural gas, visible emissions are not expected to exceed Ringelmann 1 or 20% opacity. Compliance is expected.

Rule 4102 Nuisance

Rule 4102 prohibits discharge of air contaminants which could cause injury, detriment, nuisance or annoyance to the public. Public nuisance conditions are not expected as a result of these operations, provided the equipment is well maintained. Therefore, compliance with this rule is expected.

California Health & Safety Code 41700 (Health Risk Assessment)

District Policy APR 1905 – *Risk Management Policy for Permitting New and Modified Sources* specifies that for an increase in emissions associated with a proposed new source or modification, the District perform an analysis to determine the possible impact to the nearest resident or worksite.

An HRA is not required for a project with a total facility prioritization score of less than or equal to one. According to the Technical Services Memo for this project (**Attachment IV**), the total facility prioritization score including this project was less than or equal to one. Therefore, no future analysis is required to determine the impact from this project and compliance with the District's Risk Management Policy is expected.

Rule 4201 Particulate Matter Concentration

Section 3.1 prohibits discharge of dust, fumes, or total particulate matter into the atmosphere from any single source operation in excess of 0.1 grain per dry standard cubic foot. The glycol reboiler with combust natural gas only and therefore compliance with the rule is expected.

Rule 4408 Glycol Dehydration Systems

This rule applies to any glycol dehydration system with a glycol dehydration vent that is subject to permitting requirements pursuant to Regulation II (Permits). The glycol dehydration unit consists of a permit exempt burner, a glycol contacting unit and a glycol regeneration unit.

The glycol contactor and regenerator units are fully enclosed and emissions result entirely from piping components. There is no glycol rehydration vent.

Therefore the rule is not applicable.

Rule 4409 Component at Light Crude Oil Production Facilities, Natural Gas Production Facilities, and Natural Gas Processing Facilities

The proposed well testing and MGF equipment is subject to the rule requirements as listed in the facility wide PTO S-382-0-3. Compliance is expected.

Rule 4623 Storage of Organic Liquids

Section 5.1 requires that an operator shall not place, hold, or store organic liquid in any tank unless such tank is equipped with a VOC control system. The amine storage tank, produced water tank, and fresh water tank will be connected to vapor control system vented to a gas pipeline. The expected control efficiency is 99%.

The following conditions will be included on the ATCs:

Vapor Controlled Open and Closed Drain Tanks S-382-828 and '-829

Gas-leak concentration shall be determined by EPA Method 21. [District Rule 2201] Y

Tank shall be equipped with a vapor recovery system consisting of a closed vent system that collects all VOCs from the storage tank, and a VOC control device. The vapor recovery system shall be APCO-approved and maintained in gas-tight condition. The VOC control device shall be either of the following: a vapor return or condensation system that connects to a gas pipeline distribution system, or an approved VOC destruction device that reduces the inlet VOC emissions by at least 99% by weight as determined by the test method specified in Section 6.4.7. [District Rules 2201and 4623] Y

The control efficiency of any VOC control device, measured and calculated as carbon, shall be determined by EPA Method 25, except when the outlet concentration must be below 50 ppm in order to meet the standard, in which case EPA Method 25a may be used. EPA Method 18 may be used in lieu of EPA Method 25 or EPA Method 25a provided the identity and approximate concentrations of the analytes/compounds in the sample gas stream are known before analysis with the gas chromatograph and the gas chromatograph is calibrated for each of those known analyte/compound to ensure that the VOC concentrations are neither under- or over-reported. [District Rules 2201 and 4623] Y

All piping, valves, and fittings shall be constructed and maintained in a leak-free condition. [District Rules 2201 and 4623] Y

A leak-free condition is defined as a condition without a gas leak. A gas leak is defined as a reading in excess of 10,000 ppmv, above background, as measured by a portable hydrocarbon detection instrument in accordance with the procedures specified in EPA Test Method 21. A reading in excess of 10,000 ppmv above background is a violation of this permit and Rule 4623 and shall be reported as a deviation. [District Rules 2201and 4623] Y

Any tank gauging or sampling device on a tank vented to the vapor recovery system shall be equipped with a leak-free cover which shall be closed at all times except during gauging or sampling. [District Rules 2201 and 4623] Y

Operator shall visually inspect tank shell, hatches, seals, seams, cable seals, valves, flanges, connectors, and any other piping components directly affixed to the tank and within five feet of the tank at least once per year for liquid leaks, and with a portable hydrocarbon detection instrument conducted in accordance with EPA Method 21 for gas leaks. Operator shall also

visually or ultrasonically inspect as appropriate, the external shell and roof of the uninsulated tank for structural integrity annually. [District Rules 2210 and 4623] Y

Upon detection of a liquid leak, defined as a leak rate of greater than or equal to 30 drops per minute, operator shall repair the leak within 8 hours. For leaks with a liquid leak rate of between 3 and 30 drops per minute, the leaking component shall be repaired within 24 hours after detection. [District Rules 2201 and 4623] Y

Upon detection of a gas leak, defined as a VOC concentration of greater than 10,000 ppmv measured in accordance with EPA Method 21, operator shall take on of the following actions: 1) eliminate the leak within 8 hours after detection; or 2) if the leak cannot be eliminated, then minimize the leak to the lowest possible level within 8 hours after detection by using best maintenance practices, and eliminate the leak within 48 hours after minimization. In no event shall the total time to minimize and eliminate a leak exceed 56 hours after detection [District Rules 2201 and 4623] Y

Components found to be leaking either liquids or gases shall be immediately affixed with a tag showing the component to be leaking. Operator shall maintain records of the liquid or gas leak detection readings, date/time the leak was discovered, and date/time the component was repaired to a leak-free condition. [District Rules 2201 and 4623] Y
Leaking components that have been discovered by the operator that have been immediately tagged and repaired within the timeframes specified in District Rule 4623, Table 3 shall not constitute a violation of this rule. Leaking components as defined by District Rule 4623 discovered by District staff that were not previously identified and/or tagged by the operator, and/or any leaks that were not repaired within the timeframes specified in District Rule 4623, Table 3 shall constitute a violation of this rule. [District Rules 2201 and 4623] Y

If a component type for the tank is found to leak during an annual inspection, operator shall conduct quarterly inspections of that component type on the tank for four consecutive quarters. If no components are found to leak after four consecutive quarters, the operator may revert to annual inspections. [District Rules 2201 and 4623] Y

Any component found to be leaking on two consecutive annual inspections is in violation of the District Rule 4623, even if it is under the voluntary inspection and maintenance program. [District Rule 2201] Y

Operator shall maintain an inspection log containing the following 1) Type of component leaking; 2) Date and time of leak detection, and method of detection; 3) Date and time of leak repair, and emission level of recheck after leak is repaired; 4) Method used to minimize the leak to lowest possible level within 8 hours after detection. [District Rules 2201 and 4623] Y

Rule 4801 Sulfur Compounds

The gas combusted in the glycol reboiler will contain no more than 1.0 gr S/100 scf and therefore is expected to have exhaust sulfur compound emissions much less than 2000 ppmv. Therefore compliance with this rule is expected.

California Health & Safety Code 42301.6 (School Notice)

The District has verified that this site is not located within 1,000 feet of a school. Therefore, pursuant to California Health and Safety Code 42301.6, a school notice is not required.

California Environmental Quality Act (CEQA)

CEQA requires each public agency to adopt objectives, criteria, and specific procedures consistent with CEQA Statutes and the CEQA Guidelines for administering its responsibilities under CEQA, including the orderly evaluation of projects and preparation of environmental documents. The District adopted its *Environmental Review Guidelines* (ERG) in 2001. The basic purposes of CEQA are to:

- Inform governmental decision-makers and the public about the potential, significant environmental effects of proposed activities;
- Identify the ways that environmental damage can be avoided or significantly reduced;

- Prevent significant, avoidable damage to the environment by requiring changes in projects through the use of alternatives or mitigation measures when the governmental agency finds the changes to be feasible; and
- Disclose to the public the reasons why a governmental agency approved the project in the manner the agency chose if significant environmental effects are involved.

The District performed an Engineering Evaluation (this document) for the proposed project and determined that all project specific emission unit(s) is exempt from Best Available Control Technology (BACT) requirements. Furthermore, the District conducted a Risk Management Review and concludes that potential health impacts are less than significant.

Issuance of permits for emissions units not subject to BACT requirements and with health impact less than significant is a matter of ensuring conformity with applicable District rules and regulations and does not require discretionary judgment or deliberation. Thus, the District concludes that this permitting action constitutes a ministerial approval. Section 21080 of the Public Resources Code exempts from the application of CEQA those projects over which a public agency exercises only ministerial approval. Therefore, the District finds that this project is exempt from the provisions of CEQA.

IX. Recommendation

Compliance with all applicable rules and regulations is expected. Pending a successful COC review, issue ATCs S-382-816-0 through '-829-0 in **Attachment VI**.

X. Billing Information

Annual Permit Fees			
Permit Number	Fee Schedule	Fee Description	Annual Fee
S-382-816	3020-05B	5,129 gallons	$93.00
S-382-817	3020-05B	5,129 gallons	$93.00
S-382-818	3020-05B	5,129 gallons	$93.00
S-382-819	3020-02D	1.45 MMBtu/hr	$314.00
S-382-820	3020-01D	100 hp	$314.00
S-382-821	3020-01D	100 hp	$314.00
S-382-822	3020-01F	750 hp	$607.00
S-382-823	3020-01F	750 hp	$607.00
S-382-824	3020-01H	4250 hp	$4250.00
S-382-825	3020-01H	4250 hp	$4250.00
S-382-826	3020-01G	1100 hp	$815.00
S-382-827	3020-01G	1100 hp	$815.00
S-382-828	3020-05C	1000 bbl	$135.00
S-382-829	3020-05C	1000 bbl	$135.00

Attachments

I: Process Schematics and Plot Plan
II: Fugitive Emissions
III Emissions Profiles
IV: HRA Summary
V: Title V Compliance Certification Form
VI: Draft ATCs

ATTACHMENT I
Process Schematics and Plot Plan

ISSUED FOR DESIGN

JULY 02, 2012

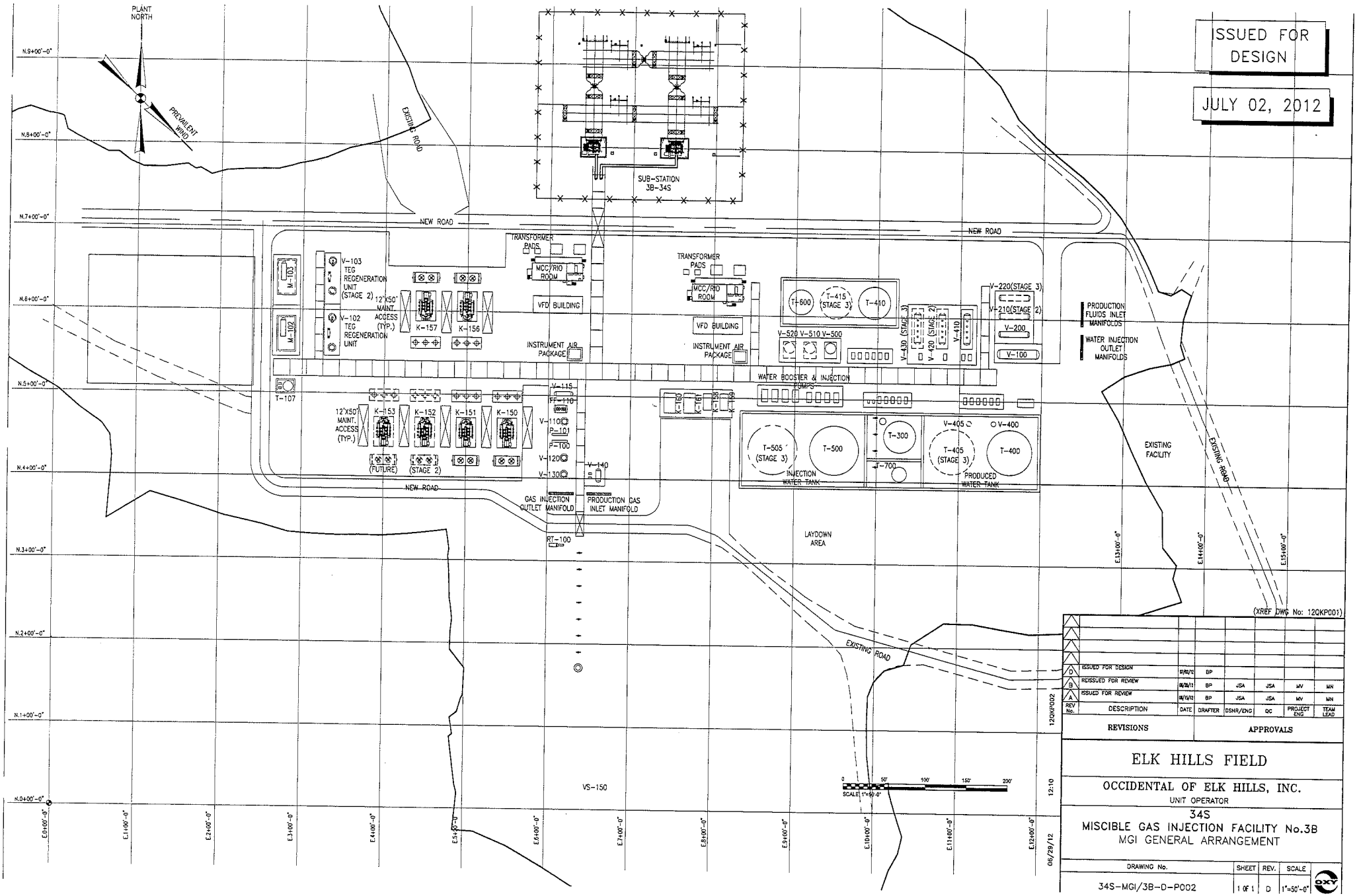

(XREF DWG No: 12QKP001)

REV No.	DESCRIPTION	DATE	DRAFTER	DSNR/ENG	QC	PROJECT ENG	TEAM LEAD
D	ISSUED FOR DESIGN	07/02/12	BP				
B	REISSUED FOR REVIEW	06/28/12	BP	JSA	JSA	MV	MN
A	ISSUED FOR REVIEW	06/15/12	BP	JSA	JSA	MV	MN

REVISIONS — APPROVALS

12QKP002

12:10

06/29/12

ELK HILLS FIELD

OCCIDENTAL OF ELK HILLS, INC.
UNIT OPERATOR

34S
MISCIBLE GAS INJECTION FACILITY No.3B
MGI GENERAL ARRANGEMENT

DRAWING No.	SHEET	REV.	SCALE
34S-MGI/3B-D-P002	1 OF 1	D	1"=50'-0"

PROCESS FLOW DIAGRAM

DRAWING INDEX

DRAWING NUMBER	DESCRIPTION
1617901-MUS-PRO-PFD-00-4005	PROCESS FLOW DIAGRAM DRAWING INDEX
1617901-MUS-PRO-PFD-10-4000	TEST SEPARATOR 1A-3G
1617901-MUS-PRO-PFD-10-4010	TEST SEPARATOR 3C-3S5
1617901-MUS-PRO-PFD-10-4015	TEST SEPARATORS 3B-34S
1617901-MUS-PRO-PFD-10-4016	WAG MANIFOLDS 3B-34S
1617901-MUS-PRO-PFD-30-4020	VAPOR RECOVERY UNITS - FIELD COMPRESSION FACILITY
1617901-MUS-PRO-PFD-30-4021	GAS AND LIQUID GATHERING HEADER - FIELD COMPRESSION FACILITY
1617901-MUS-PRO-PFD-30-4025	PRODUCTION SEPARATOR & TEG SYSTEM - FIELD COMPRESSION FACILITY
1617901-MUS-PRO-PFD-30-4030	RECYCLE COMPRESSOR - TRAIN 1 - FIELD COMPRESSION FACILITY
1617901-MUS-PRO-PFD-30-4031	RECYCLE COMPRESSOR - TRAIN 2 - FIELD COMPRESSION FACILITY
1617901-MUS-PRO-PFD-30-4032	RECYCLE COMPRESSOR - TRAIN 3 - FIELD COMPRESSION FACILITY
1617901-MUS-PRO-PFD-30-4035	INJECTION COMPRESSOR HEADER - FIELD COMPRESSION FACILITY
1617901-MUS-PRO-PFD-30-4040	MISCIBLE GAS INJECTION COMPRESSORS- FIELD COMPRESSION FACILITY TRAIN 1 AND TRAIN 2
1617901-MUS-PRO-PFD-30-4041	MISCIBLE GAS INJECTION COMPRESSORS- FIELD COMPRESSION FACILITY TRAIN 3 AND TRAIN 4
1617901-MUS-PRO-PFD-30-4050	CLOSED DRAIN SYSTEM - FIELD COMPRESSION FACILITY

PRELIMINARY HAZOP

SEPT. 9, 2011

NOTES:

REFERENCE DRAWINGS		REVISIONS						
		A	09SEP11	ISSUED FOR PRELIMINARY HAZOP	JSA	CE	MK	

MUSTANG ENGINEERING, L.P.
HOUSTON, TEXAS
PROJECT NO. 1617901

DESIGNED		
DRAWN	N. HOOKER	23AUG11
CHECKED		
APPROVED		

Occidental of Elk Hills, Inc

MISCIBLE GAS INJECTION
STAGE 1
FEED STUDY

PROCESS FLOW DIAGRAM
DRAWING INDEX

SCALE	PROJECT	AREA	DISCIPLINE	DOCTYPE	SEQUENCE	SUFFIX	REV
NONE	1617901	MUS	PRO	PFD	00	4005	A

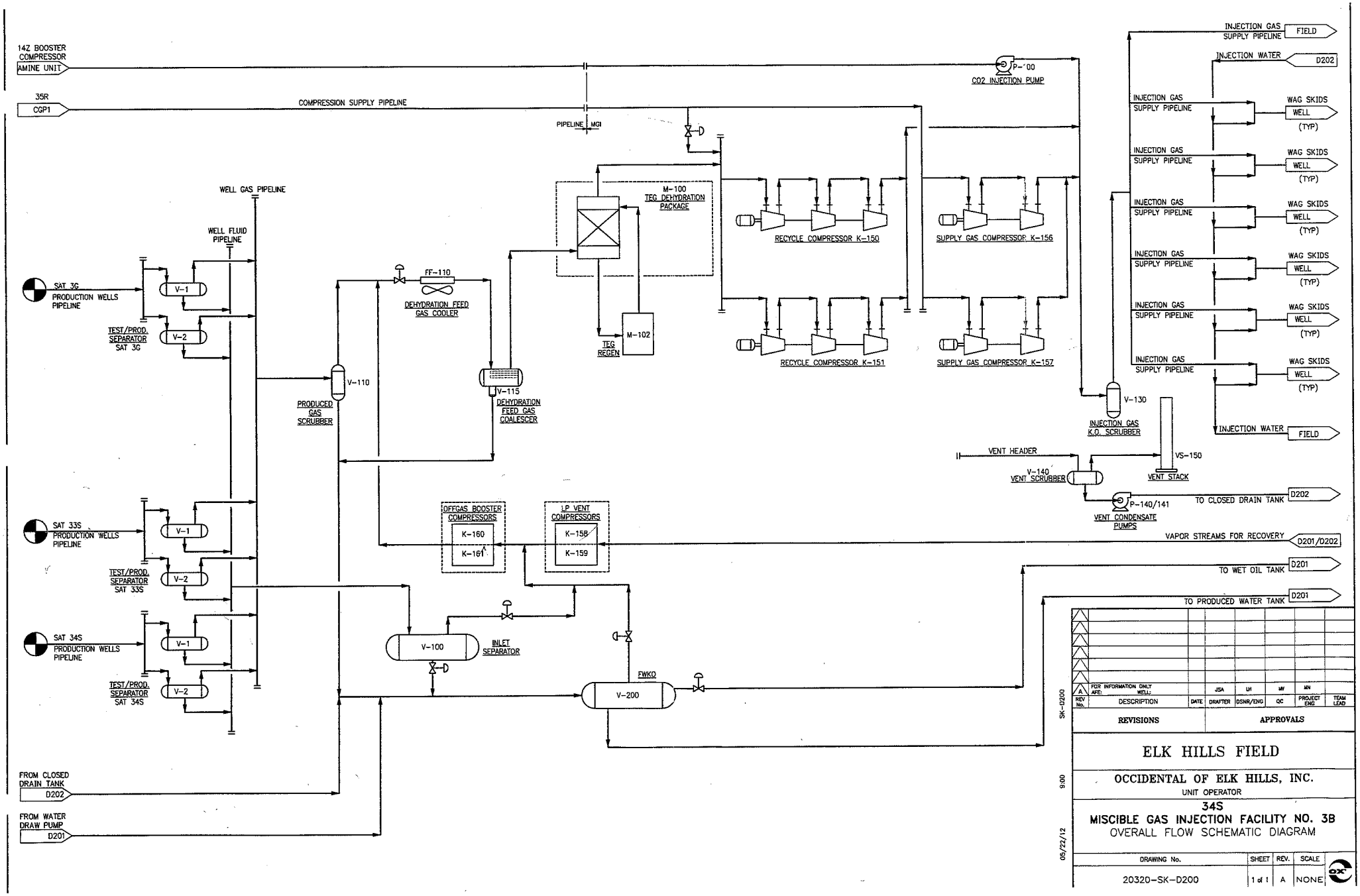
14Z BOOSTER COMPRESSOR
AMINE UNIT
35R
CGP1
COMPRESSION SUPPLY PIPELINE
PIPELINE MGI
P-100
CO2 INJECTION PUMP
INJECTION GAS SUPPLY PIPELINE
FIELD
INJECTION WATER
D202
WAG SKIDS
WELL
(TYP)
WELL GAS PIPELINE
WELL FLUID PIPELINE
SAT 3G
PRODUCTION WELLS PIPELINE
TEST/PROD. SEPARATOR SAT 3G
V-1
V-2
V-110
PRODUCED GAS SCRUBBER
FF-110
DEHYDRATION FEED GAS COOLER
V-115
DEHYDRATION FEED GAS COALESCER
M-100
TEG DEHYDRATION PACKAGE
TEG REGEN
M-102
RECYCLE COMPRESSOR K-150
RECYCLE COMPRESSOR K-151
SUPPLY GAS COMPRESSOR K-156
SUPPLY GAS COMPRESSOR K-157
V-130
INJECTION GAS K.O. SCRUBBER
VENT HEADER
V-140
VENT SCRUBBER
VS-150
VENT STACK
P-140/141
VENT CONDENSATE PUMPS
TO CLOSED DRAIN TANK
SAT 33S
PRODUCTION WELLS PIPELINE
TEST/PROD. SEPARATOR SAT 33S
OFFGAS BOOSTER COMPRESSORS
K-160
K-161
LP VENT COMPRESSORS
K-158
K-159
VAPOR STREAMS FOR RECOVERY
D201/D202
TO WET OIL TANK
D201
TO PRODUCED WATER TANK
D201
SAT 34S
PRODUCTION WELLS PIPELINE
TEST/PROD. SEPARATOR SAT 34S
V-100
INLET SEPARATOR
FWKO
V-200
FROM CLOSED DRAIN TANK
D202
FROM WATER DRAW PUMP
D201
SK-D200
9:00
05/22/12
FOR INFORMATION ONLY
AFE:
WELL:
JSA
LH
MV
MN
REV No.
DESCRIPTION
DATE
DRAFTER
DSNR/ENG
QC
PROJECT ENG
TEAM LEAD
REVISIONS
APPROVALS
ELK HILLS FIELD
OCCIDENTAL OF ELK HILLS, INC.
UNIT OPERATOR
34S
MISCIBLE GAS INJECTION FACILITY NO. 3B
OVERALL FLOW SCHEMATIC DIAGRAM
DRAWING No.
SHEET
REV.
SCALE
20320-SK-D200
1 of 1
A
NONE

MD Project: 1617901 - J:\1617901\Process\PFD's\1617901-MUS-PRO-PFD-10-4000.dgn 9/8/2011 11:19 AM JSASKIN

3G
L-816-0

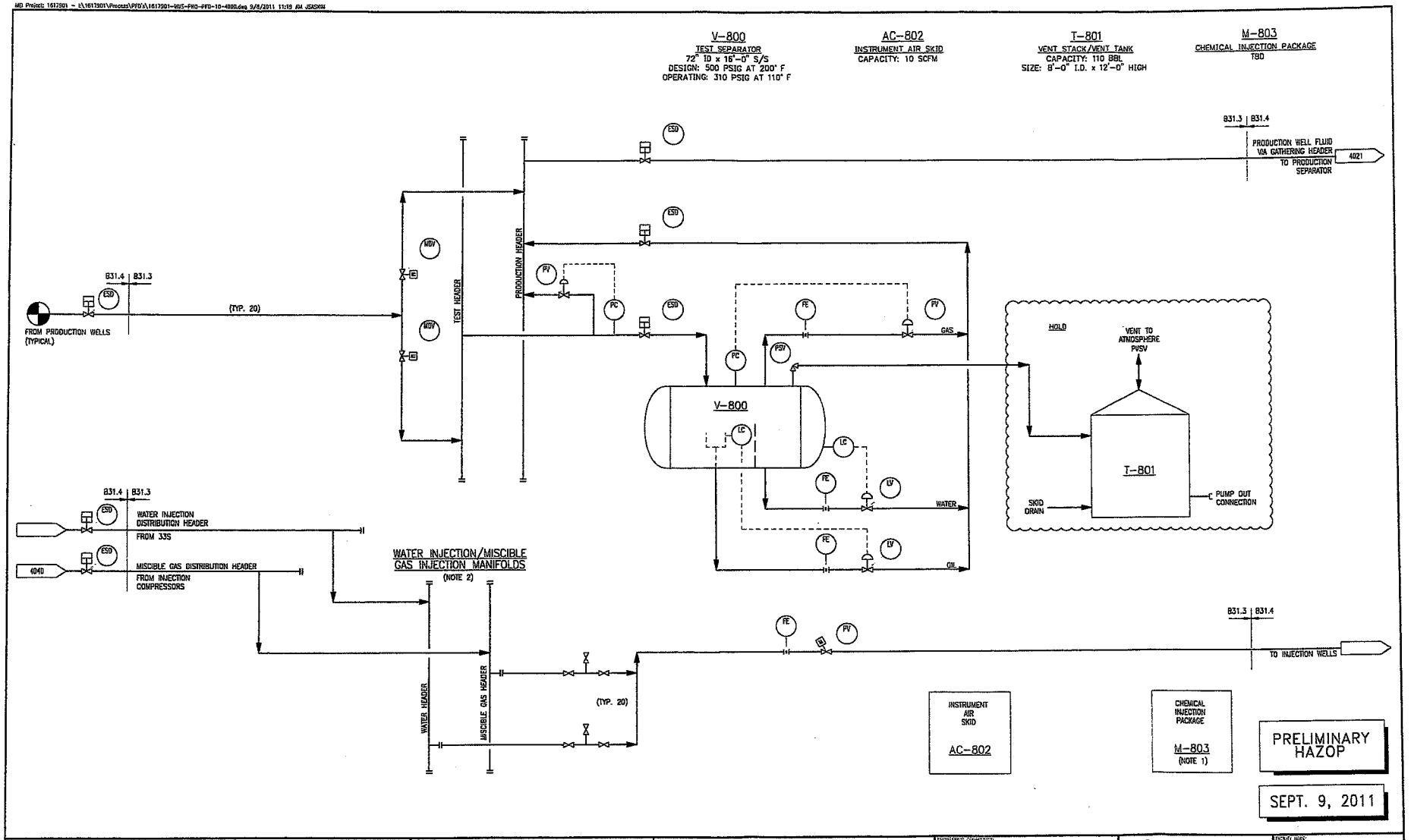

NOTES:

1. PRELIMINARY FLOW RATE PAID WITH TANK & AIR PUMP
2. SHOWN LOCATED AT INJECTION WELL

REFERENCE DRAWINGS

NO.	TITLE

REVISIONS

NO.	DATE	DESCRIPTION	BY	CHK.	APP.	APP.
A	23AUG11	ISSUED FOR INTERNAL REVIEW	JSA	LH	MK	
B	09SEP11	ISSUED FOR PRELIMINARY HAZOP	JSA	LH	MK	

ENGINEERING CONTRACTOR: MUSTANG ENGINEERING, L.P. HOUSTON, TEXAS PROJECT NO. 1617901

	BY	DATE
DESIGNED	A. JOHNS	31MAY11
DRAWN	W. ROE	04JUN11
CHECKED	MLS	23JUN11
APPROVED	MLS	23JUN11

Occidental of Elk Hills, Inc

FACILITY NAME: MISCIBLE GAS INJECTION STAGE 1 FEED STUDY

DRAWING TITLE: PROCESS FLOW DIAGRAM TEST SEPARATOR 3G

ENGINEERING DRAWING NUMBER

SCALE	PROJ. NO.	PROJ.	DISC.	FUNC.	AREA	SEQ. NO.	INT.	REV.
NONE	1617901	MUS	PRO	PFD	10	4000		B

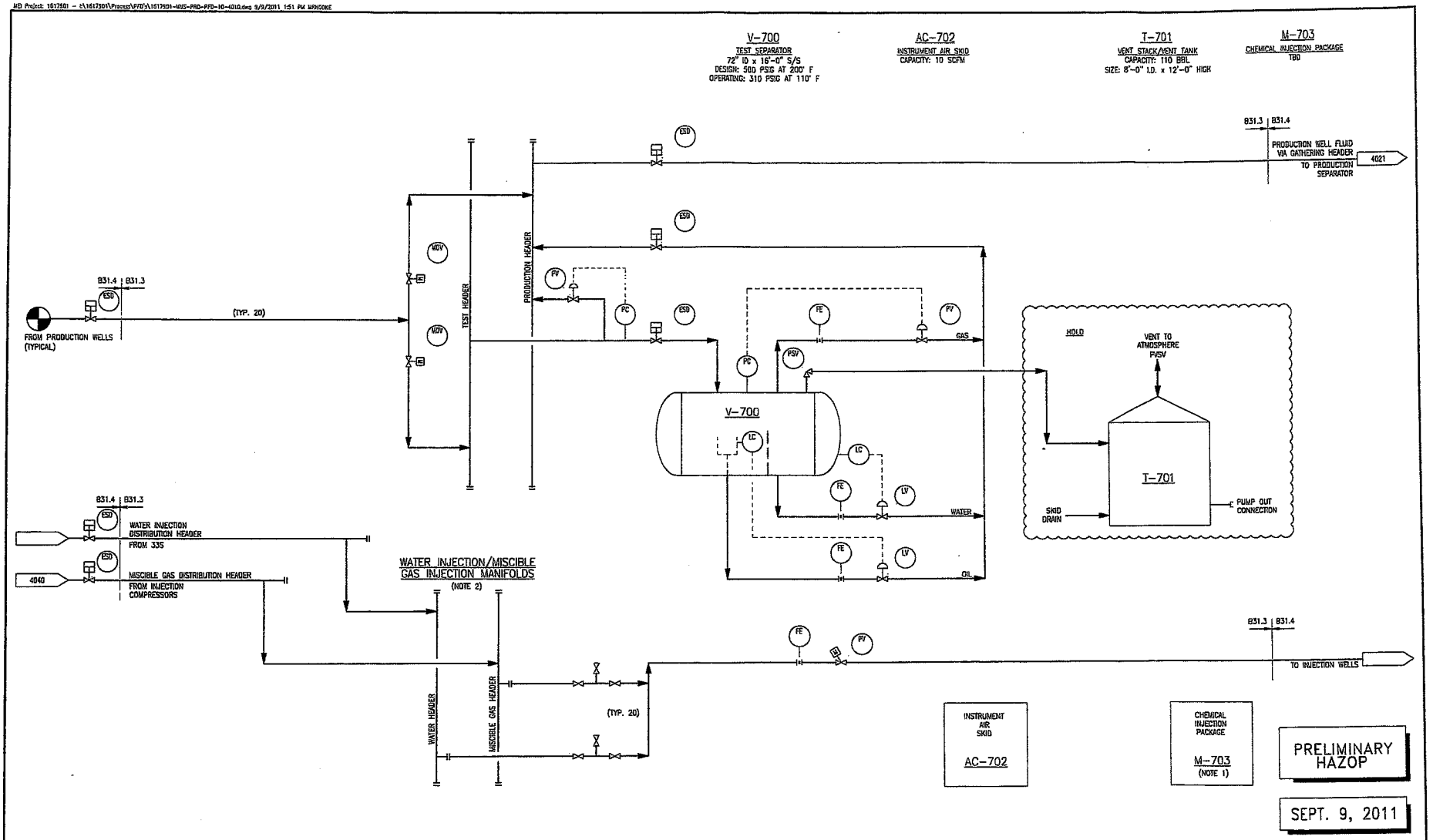

355

1-817-0

NOTES:

1. PROVISION FOR SITE FAC TOTE TANKS AND PUMP.
2. SKID LOCATED AT INJECTION WELL.

REFERENCE DRAWINGS	
NO.	TITLE

REVISIONS					
NO.	DATE	DESCRIPTION	BY	CHK.	APP.
A	23AUG11	ISSUED FOR INTERNAL REVIEW	JSA	LH	MK
B	09SEP11	ISSUED FOR PRELIMINARY HAZOP	JSA	GE	MK

ENGINEERING CONSULTANT: MUSTANG ENGINEERING, L.P. HOUSTON, TEXAS PROJECT NO. 1617901

	BY	DATE
DESIGNED	A. JOHNS	31MAY11
DRAWN	W. ROE	06JUN11
CHECKED	MLS	23JUN11
APPROVED	MLS	23JUN11

Occidental of Elk Hills, Inc

PROJECT NAME: MISCIBLE GAS INJECTION STAGE 1 FEED STUDY

DRAWING TITLE: PROCESS FLOW DIAGRAM TEST SEPARATOR 35S

CONTROLLED DOCUMENT NUMBER

SCALE	PROJ. NO.	ORIG.	DISCIP.	TYPE	AREA	SEQ. NO.	SUF.	REV.
NONE	1617901	MUS	PRO	PFD	10	4010	-	B

PRODUCING WELL GAS GATHERING HEADER

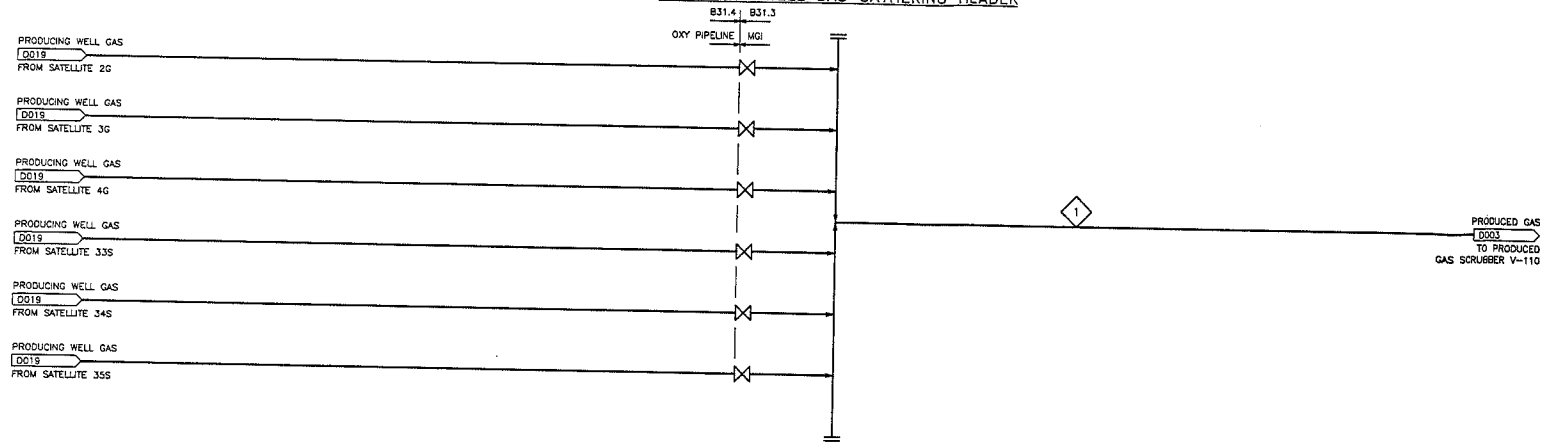

PRODUCING WELL FLUID GATHERING HEADER

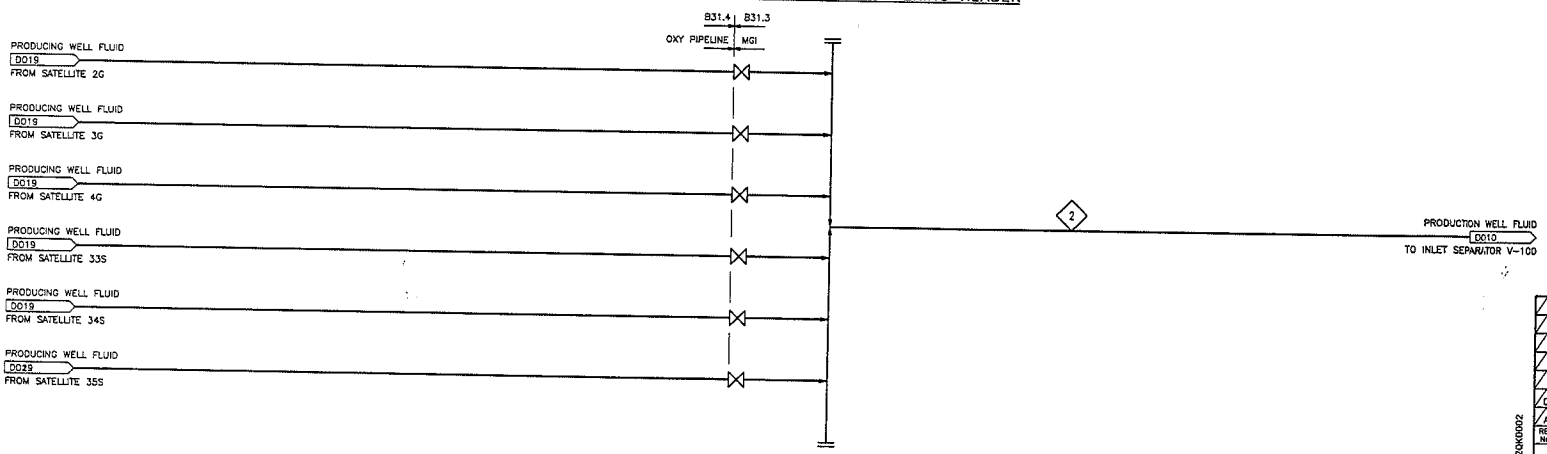

MUSTANG ENGINEERING, L.P.
PROJECT NO. 20320

REV No.	DESCRIPTION	DATE	DRAFTER	DSNR/ENG	QC	PROJECT ENG	TEAM LEAD
D	ISSUED FOR DESIGN AFE: WELL:	05/01/12	BP	LH	JSA	MV	MN
A	ISSUED FOR REVIEW AFE: WELL:	05/11/12	BP	LH	JSA	MV	MN

REVISIONS | APPROVALS

ELK HILLS FIELD

OCCIDENTAL OF ELK HILLS, INC.
UNIT OPERATOR

34S
MISCIBLE GAS INJECTION FACILITY NO. 3B
GAS & WELL FLUID GATHERING HEADERS
PROCESS FLOW DIAGRAM

DRAWING No.	SHEET	REV.	SCALE
34S-MGI/3B-D-D002	1 OF 1	D	NONE

120K0002
15:42
05/01/12

GLYCOL TRANSFER PUMPS
30 GPM AT 300 PSID
MOTOR: 10 HP

T-107
GLYCOL STORAGE TANK
CAPACITY: 400 BBL
SIZE: 12'-0" I.D. x 20'-0" HIGH
DESIGN: 16 OZ/IN² PRESSURE AND 0.5 OZ/IN² VACUUM AT 150°

M-102
TEG REGENERATION PACKAGE
CAPACITY: 30 GPM
DESIGN: 350 PSIG AT 200°F
(STAGE 1)

M-103
TEG REGENERATION PACKAGE
CAPACITY: 30 GPM
DESIGN: 350 PSIG AT 200°F
(STAGE 2)

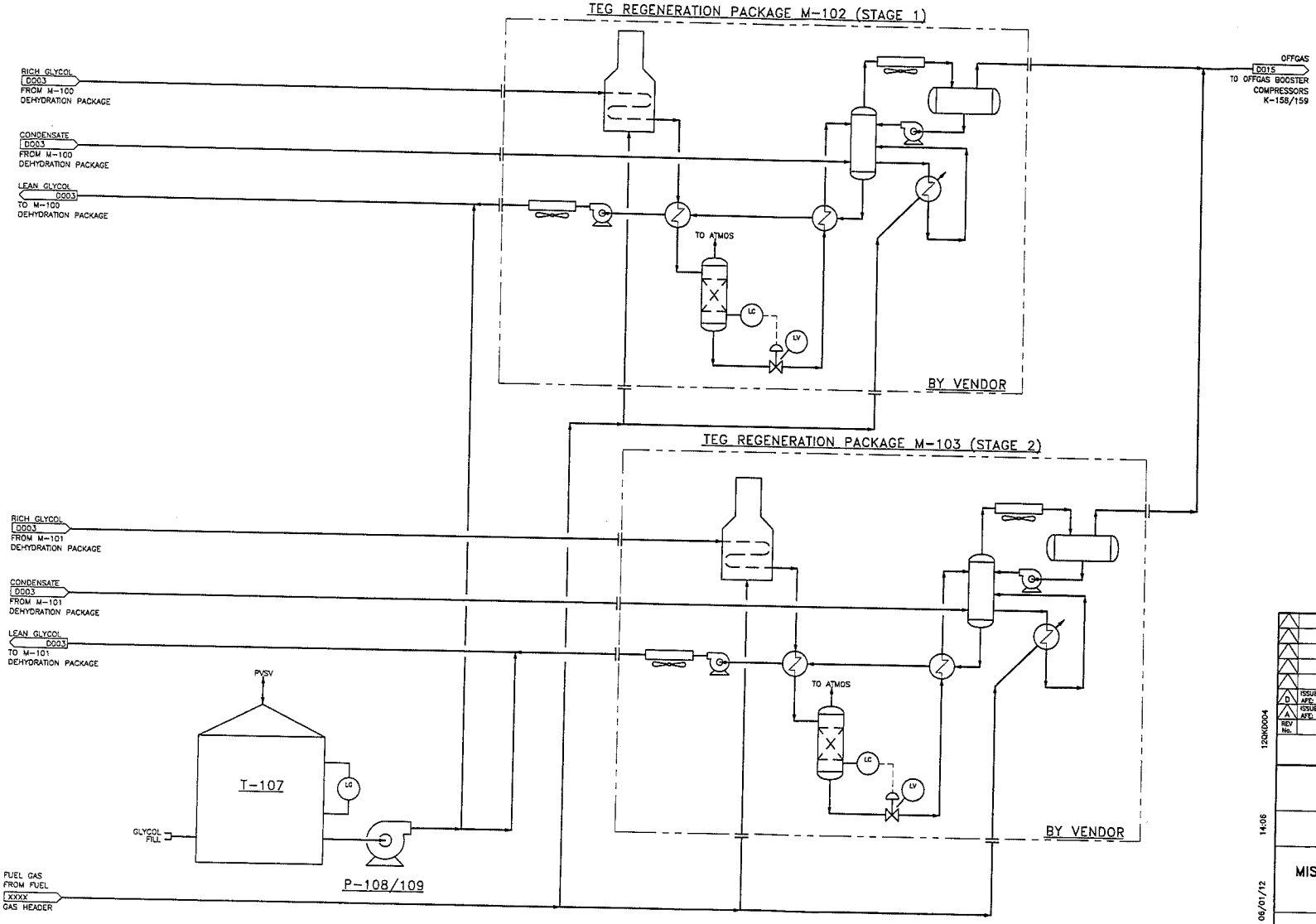

MUSTANG ENGINEERING, L.P.
PROJECT NO. 20320

REV No.	DESCRIPTION	DATE	DRAFTER	DSNR/ENG	QC	PROJECT ENG	TEAM LEAD
D	ISSUED FOR DESIGN AFE: WELL:	9/8/12	BP	LH	JSA	MV	MN
A	ISSUED FOR REVIEW AFE: WELL:	9/11/12	BP	LH	JSA	MV	MN

REVISIONS | APPROVALS

ELK HILLS FIELD

OCCIDENTAL OF ELK HILLS, INC.
UNIT OPERATOR

34S
MISCIBLE GAS INJECTION FACILITY NO. 3B
TEG REGENERATION & MAKE-UP
PROCESS FLOW DIAGRAM

DRAWING No.	SHEET	REV.	SCALE
34S-MGI/3B-D-D004	1 OF 1	D	NONE

120K0004
14:06
06/01/12

K-150/151
RECYCLE INJECTION COMPRESSOR PACKAGES
TYPE: RECIPROCATING
CAPACITY: 25 MMSCFD
1ST STAGE SUCTION: 280 PSIG
3rd STAGE DISCHARGE: 3600 PSIG
MOTOR: 4000 HP

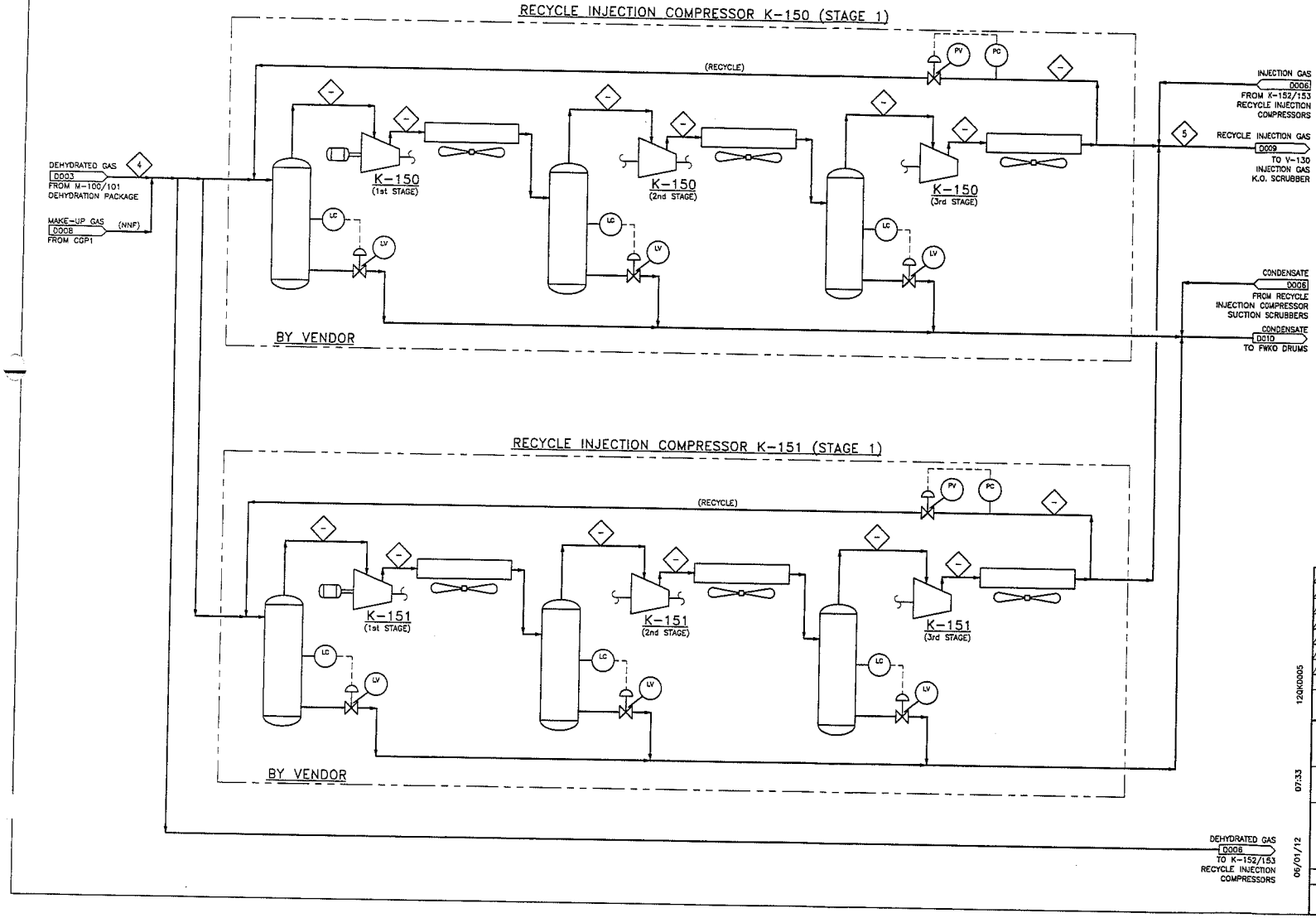

MUSTANG ENGINEERING, L.P.
PROJECT NO. 20320

REV No.	DESCRIPTION	DATE	DRAFTER	DSNR/ENG	QC	PROJECT ENG	TEAM LEAD
D	ISSUED FOR DESIGN AFE: WCLL:	8/8/12	BP	LH	JSA	MV	MN
A	ISSUED FOR REVIEW AFE: WCLL:	6/11/12	BP	LH	JSA	MV	MN

REVISIONS | APPROVALS

120K0005
07:33
06/01/12

ELK HILLS FIELD

OCCIDENTAL OF ELK HILLS, INC.
UNIT OPERATOR

34S
MISCIBLE GAS INJECTION FACILITY NO. 3B
RECYCLE INJECTION COMPRESSORS
PROCESS FLOW DIAGRAM

DRAWING No.	SHEET	REV.	SCALE
34S-MGI/3B-D-D005	1 OF 1	D	NONE

V-130
INJECTION GAS
K.O. SCRUBBER
SIZE: 4'-0" I.D. x 8'-0" S/S
DESIGN: 4000 PSIG AT 200°F

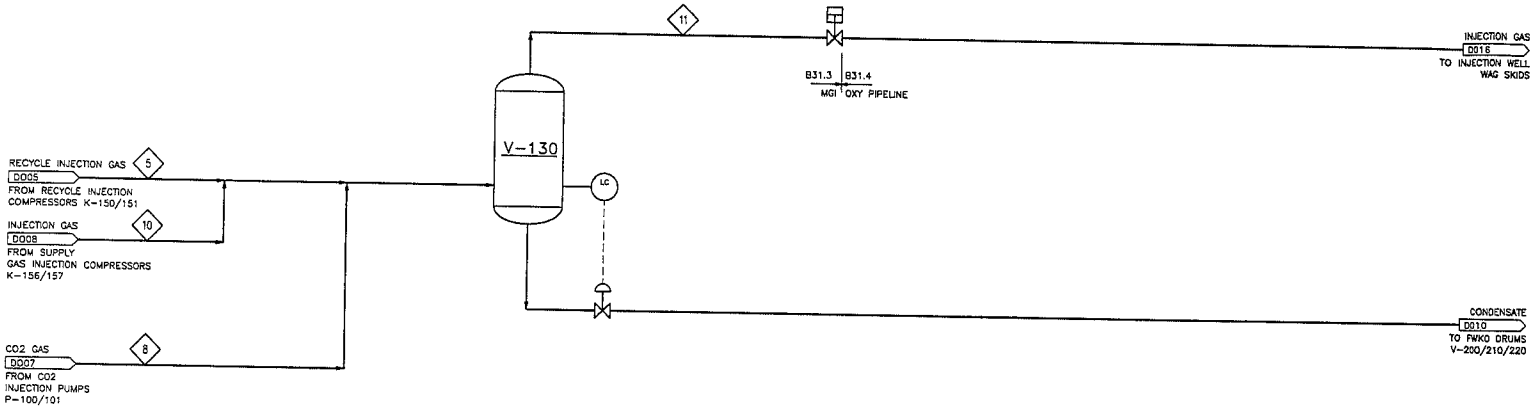

MUSTANG ENGINEERING, L.P.
PROJECT NO. 20320

REV No.	DESCRIPTION	DATE	DRAFTER	DSNR/ENG	QC	PROJECT ENG	TEAM LEAD
D	ISSUED FOR DESIGN AFE: WELL:	06/01/12	BP	LH	JSA	MV	MN
A	ISSUED FOR REVIEW AFE: WELL:	05/11/12	BP	LH	JSA	MV	MN

REVISIONS | APPROVALS

120K0009
08:32
06/01/12

ELK HILLS FIELD

OCCIDENTAL OF ELK HILLS, INC.
UNIT OPERATOR

34S
MISCIBLE GAS INJECTION FACILITY NO. 3B
INJECTION GAS K.O. SCRUBBER
PROCESS FLOW DIAGRAM

DRAWING No.	SHEET	REV.	SCALE
34S-MGI/3B-D-D009	1 OF 1	D	NONE

OFFGAS BOOSTER COMPRESSORS

TYPE: SCREW (1st STAGE)/RECIPRICATING (2nd & 3rd STAGE)
CAPACITY: 3.5 MMSCFD
1ST STAGE SUCTION: 1 PSIG
3rd STAGE DISCHARGE: 300 PSIG

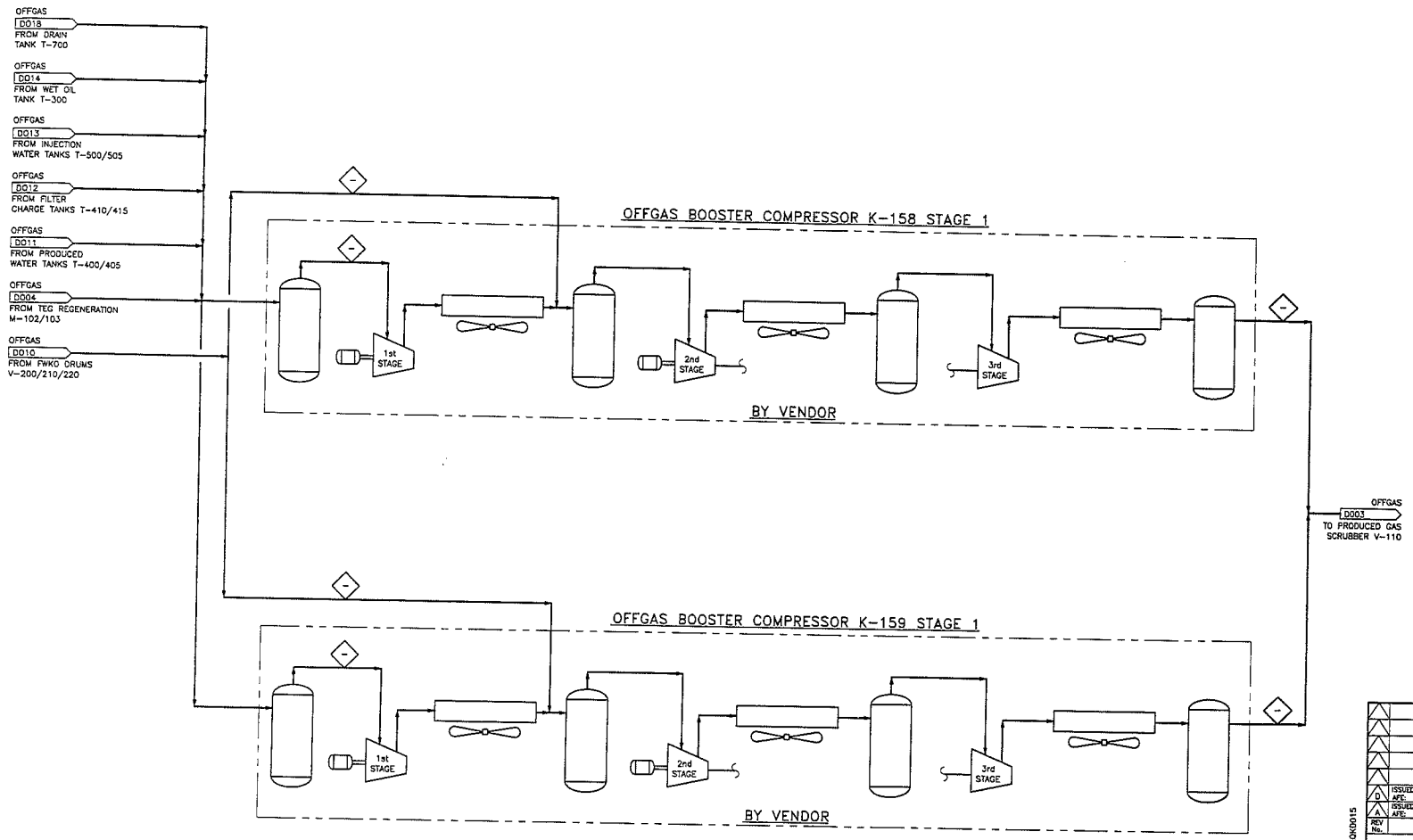

MUSTANG ENGINEERING, L.P.
PROJECT NO. 20320

REV No.	DESCRIPTION	DATE	DRAFTER	DSNR/ENG	QC	PROJECT ENG	TEAM LEAD
D	ISSUED FOR DESIGN AFE: WELL:	06/01/12	BP	LH	JSA	MV	MN
A	ISSUED FOR REVIEW AFE: WELL:	05/11/12	BP	LH	JSA	MV	MN

REVISIONS — APPROVALS

ELK HILLS FIELD

OCCIDENTAL OF ELK HILLS, INC.
UNIT OPERATOR

34S
MISCIBLE GAS INJECTION FACILITY NO. 3B
OFFGAS BOOSTER COMPRESSORS
PROCESS FLOW DIAGRAM

DRAWING No.	SHEET	REV.	SCALE
34S-MGI/3B-D-D015	1 OF 1	D	NONE

120K0015 11:57 06/01/12

DRAIN TANK
CAPACITY: 1,000 BBLS
SIZE: 18'-0" O.D. x 24'-0" HIGH
DESIGN: 6 OZ/IN² PRESSURE AND 0.5 OZ/IN² VACUUM

DRAIN PUMPS
200 GPM AT 65 PSI
MOTOR: 15 HP

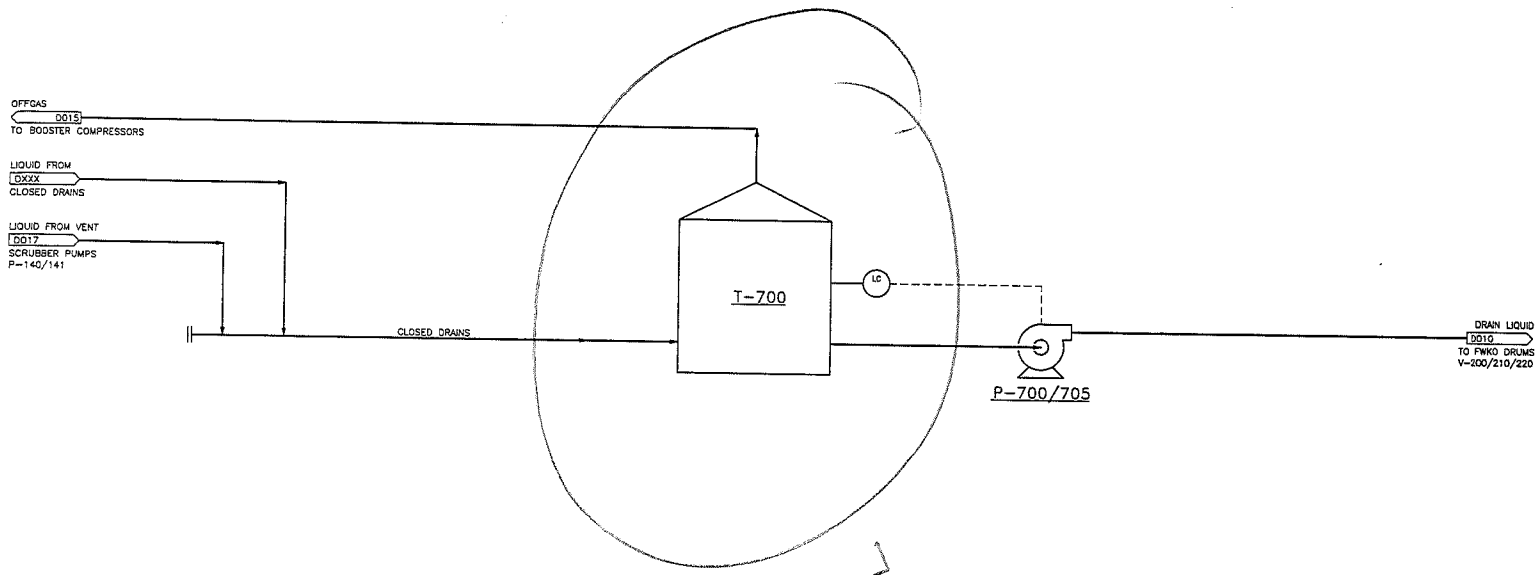

closed drain tank

MUSTANG ENGINEERING, L.P.
PROJECT NO. 20320

REV No.	DESCRIPTION	DATE	DRAFTER	DSNR/ENG	QC	PROJECT ENG	TEAM LEAD
D	ISSUED FOR DESIGN AFE: WELL:	06/01/12	BP	LH	JSA	MV	MN
A	ISSUED FOR REVIEW AFE: WELL:	05/11/12	BP	LH	JSA	MV	MN

REVISIONS — APPROVALS

ELK HILLS FIELD

OCCIDENTAL OF ELK HILLS, INC.
UNIT OPERATOR

34S
MISCIBLE GAS INJECTION FACILITY NO. 3B
CLOSED DRAIN SYSTEM
PROCESS FLOW DIAGRAM

DRAWING No.	SHEET	REV.	SCALE
34S-MGI/3B-D-D018	1 OF 1	D	NONE

06/01/12 16:41 12ND018

INSTRUMENT AIR SKID
CAPACITY: 10 SCFM

CHEMICAL INJECTION PACKAGE
TBD

V-1
PRODUCTION SEPARATOR
8'-0" I.D. X 36'-0" S/S
DESIGN: 500 PSIG @ 250°F

V-2
TEST SEPARATOR
3'-0" I.D. X 16'-0" S/S
DESIGN: 500 PSIG @ 250°F

1. TYPICAL PFD FOR ALL TANK SETTINGS.
2. PROVISION FOR SITE PAD TOTE TANKS AND PUMPS.

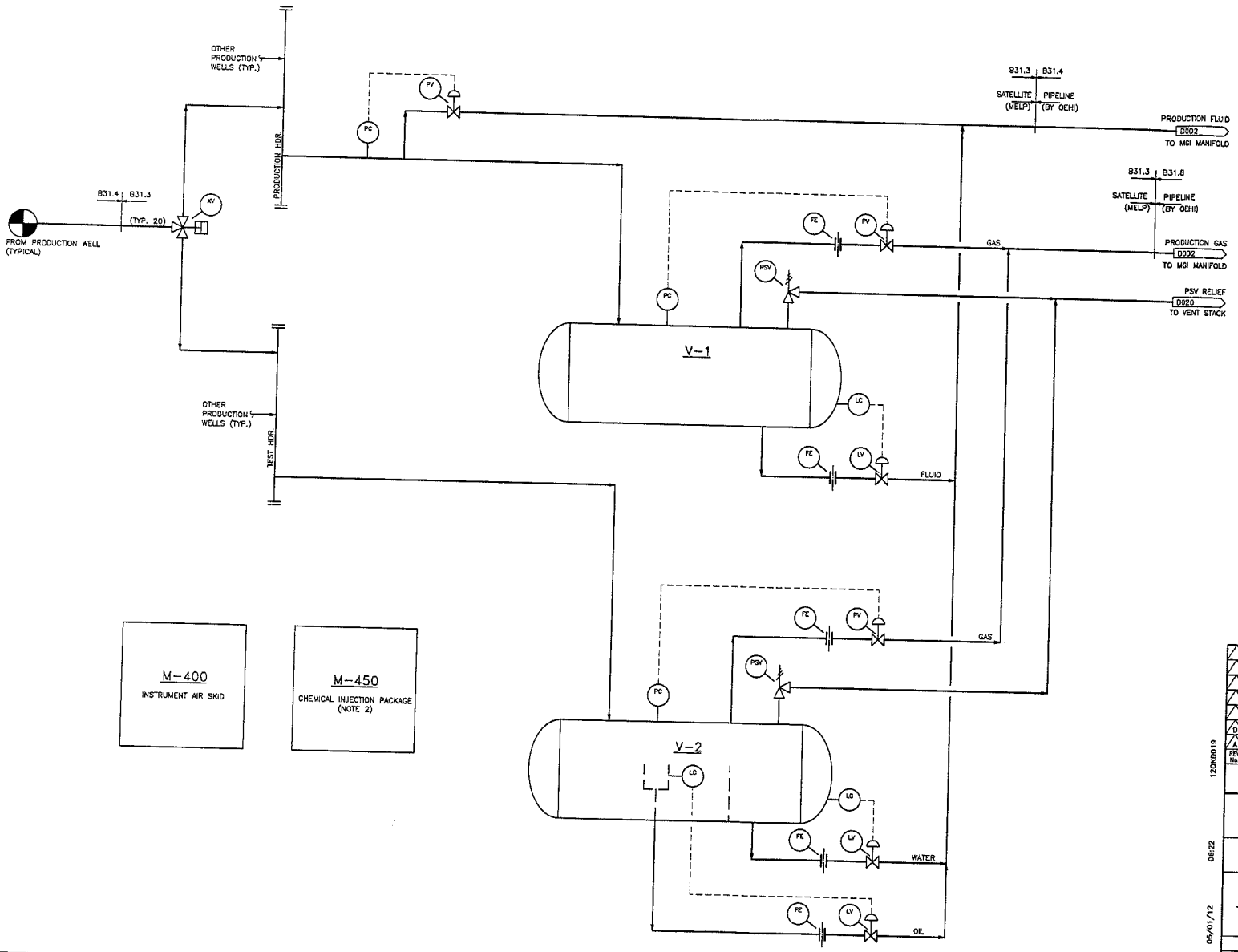

MUSTANG ENGINEERING, L.P.
PROJECT NO. 20320

REV No.	DESCRIPTION	DATE	DRAFTER	DSNR/ENG	QC	PROJECT ENG	TEAM LEAD
D	ISSUED FOR DESIGN AFE: WELL:	9/01/12	BP	LH	JSA	MV	MN
A	ISSUED FOR REVIEW AFE: WELL:	6/01/12	BP	LH	JSA	MV	MN

REVISIONS | APPROVALS

ELK HILLS FIELD

OCCIDENTAL OF ELK HILLS, INC.
UNIT OPERATOR

34S
MGI GAS INJECTION FACILITY NO. 3B
TYPICAL SATELLITE TEST/PROD. SEPARATORS
PROCESS FLOW DIAGRAM

DRAWING No.	SHEET	REV.	SCALE
34S-MGI/3B-D-D019	1 OF 1	D	NONE

120KD019
06:22
06/01/12

1. TYPICAL PFD FOR ALL TANK SETTINGS.

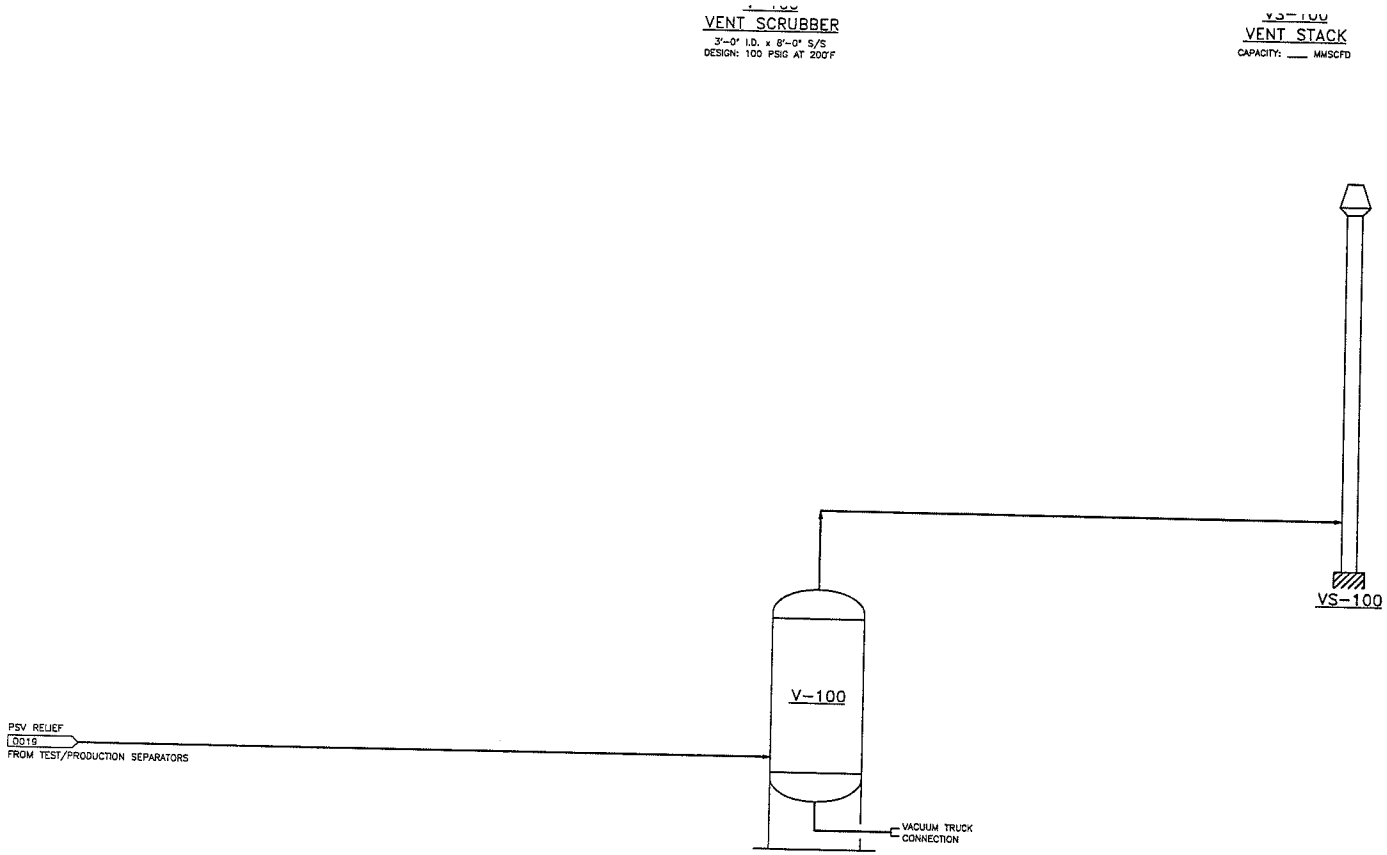

MUSTANG ENGINEERING, L.P.
PROJECT NO. 20320

REV No.	DESCRIPTION	DATE	DRAFTER	DSNR/ENG	QC	PROJECT ENG	TEAM LEAD
D	ISSUED FOR DESIGN AFE: WELL:	06/01/12	BP	LH	JSA	MV	MN
A	ISSUED FOR REVIEW AFE: WELL:	05/01/12	BP	LH	JSA	MV	MN

REVISIONS — APPROVALS

ELK HILLS FIELD

OCCIDENTAL OF ELK HILLS, INC.
UNIT OPERATOR

34S
MISCIBLE GAS INJECTION FACILITY NO. 3B
TYPICAL SATELLITE VENT STACK
PROCESS FLOW DIAGRAM

DRAWING No.	SHEET	REV.	SCALE
34S-MGI/3B-D-D020	1 OF 1	D	NONE

120K0020
06:18
05/01/12

ATTACHMENT II
Fugitive Emissions

5-382-816

Fugitive VOC Emissions From Components
Calculated Using EPA ALR Emission Factors

Well Test Facility Site 3G Production Manifold D226

Type of Component	Component Service	Component Counts	Leak Threshold (ppmv)	Leak Fraction	EPA 1995 ALR TOG Factor lb/day*Component	Fugitive Emissions TOG (lb/Day)	VOC (lb/Day)	Methane (lb/Day)
Valves	Gas/Light Liquid	10	2,000	0.0000	7.392E-04	0.007	0.007	0.003
	Light Crude Oil	96	2,000	0.0000	7.392E-04	0.071	0.071	0.027
	Heavy Crude Oil	0	2,000	0.0000	4.118E-04	0.000	0.000	0.000
Pump Seals	Gas/Light Liquid	0	2,000	0.0000	1.214E-02	0.000	0.000	0.000
	Light Crude Oil	0	2,000	0.0000	1.003E-02	0.000	0.000	0.000
	Heavy Crude Oil	0	2,000	0.0000	0.000E+00	0.000	0.000	0.000
Others	Gas/Light Liquid	0	2,000	0.0000	2.376E-03	0.000	0.000	0.000
	Light Crude Oil	0	2,000	0.0000	3.379E-03	0.000	0.000	0.000
	Heavy Crude Oil	0	2,000	0.0000	1.690E-03	0.000	0.000	0.000
Connectors	Gas/Light Liquid	3	2,000	0.0000	4.488E-04	0.001	0.001	0.001
	Light Crude Oil	29	2,000	0.0000	4.541E-04	0.013	0.013	0.005
	Heavy Crude Oil	0	2,000	0.0000	0.000E+00	0.000	0.000	0.000
Flanges	Gas/Light Liquid	22	2,000	0.0000	1.373E-04	0.003	0.003	0.001
	Light Crude Oil	195	2,000	0.0000	8.448E-05	0.016	0.016	0.006
	Heavy Crude Oil	0	2,000	0.0000	0.000E+00	0.000	0.000	0.000
Open-ended Lines	Gas/Light Liquid	0	2,000	0.0000	3.960E-04	0.000	0.000	0.000
	Light Crude Oil	0	2,000	0.0000	3.538E-04	0.000	0.000	0.000
	Heavy Crude Oil	0	2,000	0.0000	3.168E-04	0.000	0.000	0.000
Total Fugitive VOC Emissions From Associated Components (lb/day)						0.112	0.112	0.042

Gas	VOC content (%) of TOG	100.00	Methane content (%) of TOG	37.50
Liquid	VOC content (%) of TOG	100.00	Methane content (%) of TOG	37.50

Fugitive VOC Emissions From Components
Calculated Using EPA ALR Emission Factors

Well Test Facility Site 3G Test Separator D230

Type of Component	Component Service	Component Counts	Leak Threshold (ppmv)	Leak Fraction	EPA 1995 ALR TOG Factor lb/day*Component	Fugitive Emissions TOG (lb/Day)	VOC (lb/Day)	Methane (lb/Day)
Valves	Gas/Light Liquid	44	2,000	0.0000	7.392E-04	0.033	0.033	0.012
	Light Crude Oil	54	2,000	0.0000	7.392E-04	0.040	0.040	0.015
	Heavy Crude Oil	0	2,000	0.0000	4.118E-04	0.000	0.000	0.000
Pump Seals	Gas/Light Liquid	0	2,000	0.0000	1.214E-02	0.000	0.000	0.000
	Light Crude Oil	0	2,000	0.0000	1.003E-02	0.000	0.000	0.000
	Heavy Crude Oil	0	2,000	0.0000	0.000E+00	0.000	0.000	0.000
Others	Gas/Light Liquid	3	2,000	0.0000	2.376E-03	0.007	0.007	0.003
	Light Crude Oil	5	2,000	0.0000	3.379E-03	0.017	0.017	0.006
	Heavy Crude Oil	0	2,000	0.0000	1.690E-03	0.000	0.000	0.000
Connectors	Gas/Light Liquid	62	2,000	0.0000	4.488E-04	0.028	0.028	0.010
	Light Crude Oil	88	2,000	0.0000	4.541E-04	0.040	0.040	0.015
	Heavy Crude Oil	0	2,000	0.0000	0.000E+00	0.000	0.000	0.000
Flanges	Gas/Light Liquid	36	2,000	0.0000	1.373E-04	0.005	0.005	0.002
	Light Crude Oil	48	2,000	0.0000	8.448E-05	0.004	0.004	0.002
	Heavy Crude Oil	0	2,000	0.0000	0.000E+00	0.000	0.000	0.000
Open-ended Lines	Gas/Light Liquid	0	2,000	0.0000	3.960E-04	0.000	0.000	0.000
	Light Crude Oil	0	2,000	0.0000	3.538E-04	0.000	0.000	0.000
	Heavy Crude Oil	0	2,000	0.0000	3.168E-04	0.000	0.000	0.000
Total Fugitive VOC Emissions From Associated Components (lb/day)						0.173	0.173	0.065

Gas	VOC content (%) of TOG	100.00	Methane content (%) of TOG	37.50
Liquid	VOC content (%) of TOG	100.00	Methane content (%) of TOG	37.50

Fugitive VOC Emissions From Components
Calculated Using EPA ALR Emission Factors

Well Test Facility Site 3G Production Separator D231

Type of Component	Component Service	Component Counts	Leak Threshold (ppmv)	Leak Fraction	EPA 1995 ALR TOG Factor lb/day*Component	Fugitive Emissions TOG (lb/Day)	VOC (lb/Day)	Methane (lb/Day)
Valves	Gas/Light Liquid	36	2,000	0.0000	7.392E-04	0.027	0.027	0.010
	Light Crude Oil	38	2,000	0.0000	7.392E-04	0.028	0.028	0.011
	Heavy Crude Oil	0	2,000	0.0000	4.118E-04	0.000	0.000	0.000
Pump Seals	Gas/Light Liquid	0	2,000	0.0000	1.214E-02	0.000	0.000	0.000
	Light Crude Oil	0	2,000	0.0000	1.003E-02	0.000	0.000	0.000
	Heavy Crude Oil	0	2,000	0.0000	0.000E+00	0.000	0.000	0.000
Others	Gas/Light Liquid	3	2,000	0.0000	2.376E-03	0.007	0.007	0.003
	Light Crude Oil	3	2,000	0.0000	3.379E-03	0.010	0.010	0.004
	Heavy Crude Oil	0	2,000	0.0000	1.690E-03	0.000	0.000	0.000
Connectors	Gas/Light Liquid	60	2,000	0.0000	4.488E-04	0.027	0.027	0.010
	Light Crude Oil	64	2,000	0.0000	4.541E-04	0.029	0.029	0.011
	Heavy Crude Oil	0	2,000	0.0000	0.000E+00	0.000	0.000	0.000
Flanges	Gas/Light Liquid	32	2,000	0.0000	1.373E-04	0.004	0.004	0.002
	Light Crude Oil	23	2,000	0.0000	8.448E-05	0.002	0.002	0.001
	Heavy Crude Oil	0	2,000	0.0000	0.000E+00	0.000	0.000	0.000
Open-ended Lines	Gas/Light Liquid	0	2,000	0.0000	3.960E-04	0.000	0.000	0.000
	Light Crude Oil	0	2,000	0.0000	3.538E-04	0.000	0.000	0.000
	Heavy Crude Oil	0	2,000	0.0000	3.168E-04	0.000	0.000	0.000
Total Fugitive VOC Emissions From Associated Components (lb/day)						0.134	0.134	0.050

Gas	VOC content (%) of TOG	100.00	Methane content (%) of TOG	37.50
Liquid	VOC content (%) of TOG	100.00	Methane content (%) of TOG	37.50

Fugitive VOC Emissions From Components
Calculated Using EPA ALR Emission Factors

Production Well Test Facility Site 3G Vent System D232

Type of Component	Component Service	Component Counts	Leak Threshold (ppmv)	Leak Fraction	EPA 1995 ALR TOG Factor lb/day*Component	Fugitive Emissions TOG (lb/Day)	VOC (lb/Day)	Methane (lb/Day)
Valves	Gas/Light Liquid	16	2,000	0.0000	7.392E-04	0.012	0.012	0.004
	Light Crude Oil	0	2,000	0.0000	7.392E-04	0.000	0.000	0.000
	Heavy Crude Oil	0	2,000	0.0000	4.118E-04	0.000	0.000	0.000
Pump Seals	Gas/Light Liquid	0	2,000	0.0000	1.214E-02	0.000	0.000	0.000
	Light Crude Oil	0	2,000	0.0000	1.003E-02	0.000	0.000	0.000
	Heavy Crude Oil	0	2,000	0.0000	0.000E+00	0.000	0.000	0.000
Others	Gas/Light Liquid	3	2,000	0.0000	2.376E-03	0.007	0.007	0.003
	Light Crude Oil	0	2,000	0.0000	3.379E-03	0.000	0.000	0.000
	Heavy Crude Oil	0	2,000	0.0000	1.690E-03	0.000	0.000	0.000
Connectors	Gas/Light Liquid	27	2,000	0.0000	4.488E-04	0.012	0.012	0.005
	Light Crude Oil	0	2,000	0.0000	4.541E-04	0.000	0.000	0.000
	Heavy Crude Oil	0	2,000	0.0000	0.000E+00	0.000	0.000	0.000
Flanges	Gas/Light Liquid	26	2,000	0.0000	1.373E-04	0.004	0.004	0.001
	Light Crude Oil	8	2,000	0.0000	8.448E-05	0.001	0.001	0.000
	Heavy Crude Oil	0	2,000	0.0000	0.000E+00	0.000	0.000	0.000
Open-ended Lines	Gas/Light Liquid	0	2,000	0.0000	3.960E-04	0.000	0.000	0.000
	Light Crude Oil	0	2,000	0.0000	3.538E-04	0.000	0.000	0.000
	Heavy Crude Oil	0	2,000	0.0000	3.168E-04	0.000	0.000	0.000
Total Fugitive VOC Emissions From Associated Components (lb/day)						0.035	0.035	0.013

Gas	VOC content (%) of TOG	100.00	Methane content (%) of TOG	37.50
Liquid	VOC content (%) of TOG	100.00	Methane content (%) of TOG	37.50

TANKS 4.0.5d
Emissions Report - Detail Format
Tank Indentification and Physical Characteristics

Identification

User Identification:	3G MGI Vent Scrubber
City:	Tupman
State:	California
Company:	Occidental Of Elk Hills, Inc.
Type of Tank:	Horizontal Tank
Description:	3G MGI Vent Scrubber V-100 Horizontal Tank

Tank Dimensions

Shell Length (ft):		8.00
Diameter (ft):		3.00
Volume (gallons):		423.00
Turnovers:		0.00
Net Throughput(gal/yr):		0.00
Is Tank Heated (y/n):	N	
Is Tank Underground (y/n):	N	

Paint Characteristics

Shell Color/Shade:	White/White
Shell Condition	Good

Breather Vent Settings

Vacuum Settings (psig):	-0.03
Pressure Settings (psig)	0.03

Meterological Data used in Emissions Calculations: Bakersfield, California (Avg Atmospheric Pressure = 14.47 psia)

TANKS 4.0.0d
Emissions Report - Detail Format
Liquid Contents of Storage Tank

3G MGI Vent Scrubber - Horizontal Tank
Tupman, California

Mixture/Component	Month	Daily Liquid Surf. Temperature (deg F) Avg.	Min.	Max.	Liquid Bulk Temp (deg F)	Vapor Pressure (psia) Avg.	Min.	Max.	Vapor Mol. Weight.	Liquid Mass Fract.	Vapor Mass Fract.	Mol. Weight	Basis for Vapor Pressure Calculations
Crude oil (RVP 5)	Jan	58.62	54.46	62.78	65.42	2.8008	2.5782	3.0385	50.0000			207.00	Option 4: RVP=5
Crude oil (RVP 5)	Feb	61.49	56.39	66.58	65.42	2.9628	2.6797	3.2696	50.0000			207.00	Option 4: RVP=5
Crude oil (RVP 5)	Mar	63.85	57.94	69.77	65.42	3.1022	2.7631	3.4740	50.0000			207.00	Option 4: RVP=5
Crude oil (RVP 5)	Apr	66.98	60.01	73.95	65.42	3.2945	2.8784	3.7575	50.0000			207.00	Option 4: RVP=5
Crude oil (RVP 5)	May	71.00	63.30	78.70	65.42	3.5556	3.0691	4.1020	50.0000			207.00	Option 4: RVP=5
Crude oil (RVP 5)	Jun	74.47	66.32	82.63	65.42	3.7947	3.2534	4.4056	50.0000			207.00	Option 4: RVP=5
Crude oil (RVP 5)	Jul	77.01	68.80	85.22	65.42	3.9772	3.4110	4.6158	50.0000			207.00	Option 4: RVP=5
Crude oil (RVP 5)	Aug	76.03	68.25	83.81	65.42	3.9057	3.3754	4.5006	50.0000			207.00	Option 4: RVP=5
Crude oil (RVP 5)	Sep	72.96	65.93	79.98	65.42	3.6887	3.2288	4.1995	50.0000			207.00	Option 4: RVP=5
Crude oil (RVP 5)	Oct	68.33	62.00	74.66	65.42	3.3804	2.9925	3.8075	50.0000			207.00	Option 4: RVP=5
Crude oil (RVP 5)	Nov	62.38	57.33	67.44	65.42	3.0151	2.7298	3.3239	50.0000			207.00	Option 4: RVP=5
Crude oil (RVP 5)	Dec	58.39	54.32	62.46	65.42	2.7877	2.5707	3.0193	50.0000			207.00	Option 4: RVP=5

TANKS 4.0.9d
Emissions Report - Detail Format
Individual Tank Emission Totals

Emissions Report for: January, February, March, April, May, June, July, August, September, October, November, December

3G MGI Vent Scrubber - Horizontal Tank
Tupman, California

	Losses(lbs)		
Components	Working Loss	Breathing Loss	Total Emissions
Crude oil (RVP 5)	0.00	37.36	37.36

TANKS 4.0.d
Emissions Report - Detail Format
Detail Calculations (AP-42)

3G MGI Vent Scrubber - Horizontal Tank
Tupman, California

Month:	January	February	March	April	May	June	July	August	September	October	November	December
Standing Losses (lb):												
Vapor Space Volume (cu ft):	1.5269	1.8409	2.5334	3.1501	3.9995	4.4886	4.9882	4.6000	3.7004	3.0460	2.0027	1.4823
Vapor Density (lb/cu ft):	36.0183	36.0183	36.0183	36.0183	36.0183	36.0183	36.0183	36.0183	36.0183	36.0183	36.0183	36.0183
Vapor Space Expansion Factor:	0.0252	0.0265	0.0276	0.0291	0.0312	0.0331	0.0345	0.0340	0.0323	0.0298	0.0269	0.0251
Vented Vapor Saturation Factor:	0.0664	0.0851	0.1024	0.1262	0.1472	0.1634	0.1703	0.1589	0.1372	0.1160	0.0854	0.0647
	0.8179	0.8094	0.8022	0.7924	0.7796	0.7682	0.7598	0.7631	0.7732	0.7882	0.8066	0.8186
Tank Vapor Space Volume:												
Vapor Space Volume (cu ft):	36.0183	36.0183	36.0183	36.0183	36.0183	36.0183	36.0183	36.0183	36.0183	36.0183	36.0183	36.0183
Tank Diameter (ft):	3.0000	3.0000	3.0000	3.0000	3.0000	3.0000	3.0000	3.0000	3.0000	3.0000	3.0000	3.0000
Effective Diameter (ft):	5.5293	5.5293	5.5293	5.5293	5.5293	5.5293	5.5293	5.5293	5.5293	5.5293	5.5293	5.5293
Vapor Space Outage (ft):	1.5000	1.5000	1.5000	1.5000	1.5000	1.5000	1.5000	1.5000	1.5000	1.5000	1.5000	1.5000
Tank Shell Length (ft):	8.0000	8.0000	8.0000	8.0000	8.0000	8.0000	8.0000	8.0000	8.0000	8.0000	8.0000	8.0000
Vapor Density												
Vapor Density (lb/cu ft):	0.0252	0.0265	0.0276	0.0291	0.0312	0.0331	0.0345	0.0340	0.0323	0.0298	0.0269	0.0251
Vapor Molecular Weight (lb/lb-mole):	50.0000	50.0000	50.0000	50.0000	50.0000	50.0000	50.0000	50.0000	50.0000	50.0000	50.0000	50.0000
Vapor Pressure at Daily Average Liquid Surface Temperature (psia):	2.8008	2.9628	3.1022	3.2945	3.5556	3.7947	3.9772	3.9057	3.6887	3.3804	3.0151	2.7877
Daily Avg. Liquid Surface Temp. (deg. R):	518.2922	521.1571	523.5218	526.6478	530.6669	534.1445	536.6832	535.7010	532.6256	527.9968	522.0547	518.0564
Daily Average Ambient Temp. (deg. F):	47.7500	53.2500	57.3500	63.0000	70.9500	78.2000	84.0500	82.5500	76.8000	67.7500	55.7500	47.4000
Ideal Gas Constant R (psia cuft / (lb-mol-deg R)):	10.731	10.731	10.731	10.731	10.731	10.731	10.731	10.731	10.731	10.731	10.731	10.731
Liquid Bulk Temperature (deg. R):	525.0900	525.0900	525.0900	525.0900	525.0900	525.0900	525.0900	525.0900	525.0900	525.0900	525.0900	525.0900
Tank Paint Solar Absorptance (Shell):	0.1700	0.1700	0.1700	0.1700	0.1700	0.1700	0.1700	0.1700	0.1700	0.1700	0.1700	0.1700
Daily Total Solar Insulation Factor (Btu/sqft day):	727.5001	1,058.7300	1,476.2573	1,952.7969	2,340.8181	2,554.9753	2,528.6419	2,288.7858	1,882.6802	1,401.0643	908.0267	666.5843
Vapor Space Expansion Factor												
Vapor Space Expansion Factor:	0.0664	0.0851	0.1024	0.1262	0.1472	0.1634	0.1703	0.1589	0.1372	0.1160	0.0854	0.0647
Daily Vapor Temperature Range (deg. R):	16.6389	20.3756	23.6590	27.8713	30.7983	32.6097	32.8443	31.1266	28.1136	25.3171	20.2342	16.2769
Daily Vapor Pressure Range (psia):	0.4603	0.5899	0.7109	0.8792	1.0329	1.1522	1.2048	1.1252	0.9707	0.8150	0.5941	0.4486
Breather Vent Press. Setting Range(psia):	0.0600	0.0600	0.0600	0.0600	0.0600	0.0600	0.0600	0.0600	0.0600	0.0600	0.0600	0.0600
Vapor Pressure at Daily Average Liquid Surface Temperature (psia):	2.8008	2.9628	3.1022	3.2945	3.5556	3.7947	3.9772	3.9057	3.6887	3.3804	3.0151	2.7877
Vapor Pressure at Daily Minimum Liquid Surface Temperature (psia):	2.5782	2.6797	2.7631	2.8784	3.0691	3.2534	3.4110	3.3754	3.2288	2.9925	2.7298	2.5707
Vapor Pressure at Daily Maximum Liquid Surface Temperature (psia):	3.0385	3.2696	3.4740	3.7575	4.1020	4.4056	4.6158	4.5006	4.1995	3.8075	3.3239	3.0193
Daily Avg. Liquid Surface Temp. (deg R):	518.2922	521.1571	523.5218	526.6478	530.6669	534.1445	536.6832	535.7010	532.6256	527.9968	522.0547	518.0564
Daily Min. Liquid Surface Temp. (deg R):	514.1325	516.0632	517.6071	519.6800	522.9673	525.9921	528.4721	527.9194	525.5973	521.6676	516.9961	513.9872
Daily Max. Liquid Surface Temp. (deg R):	522.4520	526.2510	529.4366	533.6156	538.3665	542.2970	544.8942	543.4827	539.6540	534.3261	527.1132	522.1257
Daily Ambient Temp. Range (deg. R):	18.3000	21.3000	23.1000	25.8000	27.3000	28.4000	28.9000	28.1000	26.6000	25.9000	22.1000	18.2000
Vented Vapor Saturation Factor												
Vented Vapor Saturation Factor:	0.8179	0.8094	0.8022	0.7924	0.7796	0.7682	0.7598	0.7631	0.7732	0.7882	0.8066	0.8186
Vapor Pressure at Daily Average Liquid: Surface Temperature (psia):	2.8008	2.9628	3.1022	3.2945	3.5556	3.7947	3.9772	3.9057	3.6887	3.3804	3.0151	2.7877
Vapor Space Outage (ft):	1.5000	1.5000	1.5000	1.5000	1.5000	1.5000	1.5000	1.5000	1.5000	1.5000	1.5000	1.5000
Working Losses (lb):												
Vapor Molecular Weight (lb/lb-mole):	0.0000	0.0000	0.0000	0.0000	0.0000	0.0000	0.0000	0.0000	0.0000	0.0000	0.0000	0.0000
Vapor Pressure at Daily Average Liquid Surface Temperature (psia):	50.0000	50.0000	50.0000	50.0000	50.0000	50.0000	50.0000	50.0000	50.0000	50.0000	50.0000	50.0000
Net Throughput (gal/mo.):	2.8008	2.9628	3.1022	3.2945	3.5556	3.7947	3.9772	3.9057	3.6887	3.3804	3.0151	2.7877
Annual Turnovers:	0.0000	0.0000	0.0000	0.0000	0.0000	0.0000	0.0000	0.0000	0.0000	0.0000	0.0000	0.0000
Turnover Factor:	0.0000	0.0000	0.0000	0.0000	0.0000	0.0000	0.0000	0.0000	0.0000	0.0000	0.0000	0.0000
Tank Diameter (ft):	1.0000	1.0000	1.0000	1.0000	1.0000	1.0000	1.0000	1.0000	1.0000	1.0000	1.0000	1.0000
Working Loss Product Factor:	3.0000	3.0000	3.0000	3.0000	3.0000	3.0000	3.0000	3.0000	3.0000	3.0000	3.0000	3.0000
	0.7500	0.7500	0.7500	0.7500	0.7500	0.7500	0.7500	0.7500	0.7500	0.7500	0.7500	0.7500
Total Losses (lb):	1.5269	1.8409	2.5334	3.1501	3.9995	4.4886	4.9882	4.6000	3.7004	3.0460	2.0027	1.4823

5-382-817

Fugitive VOC Emissions From Components
Calculated Using EPA ALR Emission Factors

Well Test Facility Site 33S Production Manifold D226

Type of Component	Component Service	Component Counts	Leak Threshold (ppmv)	Leak Fraction	EPA 1995 ALR TOG Factor lb/day*Component	Fugitive Emissions TOG (lb/Day)	VOC (lb/Day)	Methane (lb/Day)
Valves	Gas/Light Liquid	10	2,000	0.0000	7.392E-04	0.007	0.007	0.003
	Light Crude Oil	96	2,000	0.0000	7.392E-04	0.071	0.071	0.027
	Heavy Crude Oil	0	2,000	0.0000	4.118E-04	0.000	0.000	0.000
Pump Seals	Gas/Light Liquid	0	2,000	0.0000	1.214E-02	0.000	0.000	0.000
	Light Crude Oil	0	2,000	0.0000	1.003E-02	0.000	0.000	0.000
	Heavy Crude Oil	0	2,000	0.0000	0.000E+00	0.000	0.000	0.000
Others	Gas/Light Liquid	0	2,000	0.0000	2.376E-03	0.000	0.000	0.000
	Light Crude Oil	0	2,000	0.0000	3.379E-03	0.000	0.000	0.000
	Heavy Crude Oil	0	2,000	0.0000	1.690E-03	0.000	0.000	0.000
Connectors	Gas/Light Liquid	3	2,000	0.0000	4.488E-04	0.001	0.001	0.001
	Light Crude Oil	29	2,000	0.0000	4.541E-04	0.013	0.013	0.005
	Heavy Crude Oil	0	2,000	0.0000	0.000E+00	0.000	0.000	0.000
Flanges	Gas/Light Liquid	22	2,000	0.0000	1.373E-04	0.003	0.003	0.001
	Light Crude Oil	195	2,000	0.0000	8.448E-05	0.016	0.016	0.006
	Heavy Crude Oil	0	2,000	0.0000	0.000E+00	0.000	0.000	0.000
Open-ended Lines	Gas/Light Liquid	0	2,000	0.0000	3.960E-04	0.000	0.000	0.000
	Light Crude Oil	0	2,000	0.0000	3.538E-04	0.000	0.000	0.000
	Heavy Crude Oil	0	2,000	0.0000	3.168E-04	0.000	0.000	0.000
Total Fugitive VOC Emissions From Associated Components (lb/day)						0.112	0.112	0.042

Gas	VOC content (%) of TOG	100.00	Methane content (%) of TOG	37.50
Liquid	VOC content (%) of TOG	100.00	Methane content (%) of TOG	37.50

Fugitive VOC Emissions From Components
Calculated Using EPA ALR Emission Factors

Well Test Facility Site 33S Test Separator D230

Type of Component	Component Service	Component Counts	Leak Threshold (ppmv)	Leak Fraction	EPA 1995 ALR TOG Factor lb/day*Component	Fugitive Emissions TOG (lb/Day)	VOC (lb/Day)	Methane (lb/Day)
Valves	Gas/Light Liquid	44	2,000	0.0000	7.392E-04	0.033	0.033	0.012
	Light Crude Oil	54	2,000	0.0000	7.392E-04	0.040	0.040	0.015
	Heavy Crude Oil	0	2,000	0.0000	4.118E-04	0.000	0.000	0.000
Pump Seals	Gas/Light Liquid	0	2,000	0.0000	1.214E-02	0.000	0.000	0.000
	Light Crude Oil	0	2,000	0.0000	1.003E-02	0.000	0.000	0.000
	Heavy Crude Oil	0	2,000	0.0000	0.000E+00	0.000	0.000	0.000
Others	Gas/Light Liquid	3	2,000	0.0000	2.376E-03	0.007	0.007	0.003
	Light Crude Oil	5	2,000	0.0000	3.379E-03	0.017	0.017	0.006
	Heavy Crude Oil	0	2,000	0.0000	1.690E-03	0.000	0.000	0.000
Connectors	Gas/Light Liquid	62	2,000	0.0000	4.488E-04	0.028	0.028	0.010
	Light Crude Oil	88	2,000	0.0000	4.541E-04	0.040	0.040	0.015
	Heavy Crude Oil	0	2,000	0.0000	0.000E+00	0.000	0.000	0.000
Flanges	Gas/Light Liquid	36	2,000	0.0000	1.373E-04	0.005	0.005	0.002
	Light Crude Oil	48	2,000	0.0000	8.448E-05	0.004	0.004	0.002
	Heavy Crude Oil	0	2,000	0.0000	0.000E+00	0.000	0.000	0.000
Open-ended Lines	Gas/Light Liquid	0	2,000	0.0000	3.960E-04	0.000	0.000	0.000
	Light Crude Oil	0	2,000	0.0000	3.538E-04	0.000	0.000	0.000
	Heavy Crude Oil	0	2,000	0.0000	3.168E-04	0.000	0.000	0.000
Total Fugitive VOC Emissions From Associated Components (lb/day)						0.173	0.173	0.065

Gas	VOC content (%) of TOG	100.00	Methane content (%) of TOG	37.50
Liquid	VOC content (%) of TOG	100.00	Methane content (%) of TOG	37.50

Fugitive VOC Emissions From Components
Calculated Using EPA ALR Emission Factors

Well Test Facility Site 33S Production Separator D231

Type of Component	Component Service	Component Counts	Leak Threshold (ppmv)	Leak Fraction	EPA 1995 ALR TOG Factor lb/day*Component	Fugitive Emissions TOG (lb/Day)	VOC (lb/Day)	Methane (lb/Day)
Valves	Gas/Light Liquid	36	2,000	0.0000	7.392E-04	0.027	0.027	0.010
	Light Crude Oil	38	2,000	0.0000	7.392E-04	0.028	0.028	0.011
	Heavy Crude Oil	0	2,000	0.0000	4.118E-04	0.000	0.000	0.000
Pump Seals	Gas/Light Liquid	0	2,000	0.0000	1.214E-02	0.000	0.000	0.000
	Light Crude Oil	0	2,000	0.0000	1.003E-02	0.000	0.000	0.000
	Heavy Crude Oil	0	2,000	0.0000	0.000E+00	0.000	0.000	0.000
Others	Gas/Light Liquid	3	2,000	0.0000	2.376E-03	0.007	0.007	0.003
	Light Crude Oil	3	2,000	0.0000	3.379E-03	0.010	0.010	0.004
	Heavy Crude Oil	0	2,000	0.0000	1.690E-03	0.000	0.000	0.000
Connectors	Gas/Light Liquid	60	2,000	0.0000	4.488E-04	0.027	0.027	0.010
	Light Crude Oil	64	2,000	0.0000	4.541E-04	0.029	0.029	0.011
	Heavy Crude Oil	0	2,000	0.0000	0.000E+00	0.000	0.000	0.000
Flanges	Gas/Light Liquid	32	2,000	0.0000	1.373E-04	0.004	0.004	0.002
	Light Crude Oil	23	2,000	0.0000	8.448E-05	0.002	0.002	0.001
	Heavy Crude Oil	0	2,000	0.0000	0.000E+00	0.000	0.000	0.000
Open-ended Lines	Gas/Light Liquid	0	2,000	0.0000	3.960E-04	0.000	0.000	0.000
	Light Crude Oil	0	2,000	0.0000	3.538E-04	0.000	0.000	0.000
	Heavy Crude Oil	0	2,000	0.0000	3.168E-04	0.000	0.000	0.000
Total Fugitive VOC Emissions From Associated Components (lb/day)						0.134	0.134	0.050

Gas	VOC content (%) of TOG	100.00	Methane content (%) of TOG	37.50
Liquid	VOC content (%) of TOG	100.00	Methane content (%) of TOG	37.50

Fugitive VOC Emissions From Components
Calculated Using EPA ALR Emission Factors

Production Well Test Facility Site 33S Vent System D232

Type of Component	Component Service	Component Counts	Leak Threshold (ppmv)	Leak Fraction	EPA 1995 ALR TOG Factor lb/day*Component	Fugitive Emissions TOG (lb/Day)	VOC (lb/Day)	Methane (lb/Day)
Valves	Gas/Light Liquid	16	2,000	0.0000	7.392E-04	0.012	0.012	0.004
	Light Crude Oil	0	2,000	0.0000	7.392E-04	0.000	0.000	0.000
	Heavy Crude Oil	0	2,000	0.0000	4.118E-04	0.000	0.000	0.000
Pump Seals	Gas/Light Liquid	0	2,000	0.0000	1.214E-02	0.000	0.000	0.000
	Light Crude Oil	0	2,000	0.0000	1.003E-02	0.000	0.000	0.000
	Heavy Crude Oil	0	2,000	0.0000	0.000E+00	0.000	0.000	0.000
Others	Gas/Light Liquid	3	2,000	0.0000	2.376E-03	0.007	0.007	0.003
	Light Crude Oil	0	2,000	0.0000	3.379E-03	0.000	0.000	0.000
	Heavy Crude Oil	0	2,000	0.0000	1.690E-03	0.000	0.000	0.000
Connectors	Gas/Light Liquid	27	2,000	0.0000	4.488E-04	0.012	0.012	0.005
	Light Crude Oil	0	2,000	0.0000	4.541E-04	0.000	0.000	0.000
	Heavy Crude Oil	0	2,000	0.0000	0.000E+00	0.000	0.000	0.000
Flanges	Gas/Light Liquid	26	2,000	0.0000	1.373E-04	0.004	0.004	0.001
	Light Crude Oil	8	2,000	0.0000	8.448E-05	0.001	0.001	0.000
	Heavy Crude Oil	0	2,000	0.0000	0.000E+00	0.000	0.000	0.000
Open-ended Lines	Gas/Light Liquid	0	2,000	0.0000	3.960E-04	0.000	0.000	0.000
	Light Crude Oil	0	2,000	0.0000	3.538E-04	0.000	0.000	0.000
	Heavy Crude Oil	0	2,000	0.0000	3.168E-04	0.000	0.000	0.000
Total Fugitive VOC Emissions From Associated Components (lb/day)						0.035	0.035	0.013

Gas	VOC content (%) of TOG	100.00	Methane content (%) of TOG	37.50
Liquid	VOC content (%) of TOG	100.00	Methane content (%) of TOG	37.50

TANKS 4.0.9d
Emissions Report - Detail Format
Tank Indentification and Physical Characteristics

Identification

User Identification:	33S MGI Vent Scrubber
City:	Tupman
State:	California
Company:	Occidental Of Elk Hills, Inc.
Type of Tank:	Horizontal Tank
Description:	33S MGI Vent Scrubber V-100 Horizontal Tank

Tank Dimensions

Shell Length (ft):		8.00
Diameter (ft):		3.00
Volume (gallons):		423.00
Turnovers:		0.00
Net Throughput(gal/yr):		0.00
Is Tank Heated (y/n):	N	
Is Tank Underground (y/n):	N	

Paint Characteristics

Shell Color/Shade:	White/White
Shell Condition	Good

Breather Vent Settings

Vacuum Settings (psig):	-0.03
Pressure Settings (psig)	0.03

Meterological Data used in Emissions Calculations: Bakersfield, California (Avg Atmospheric Pressure = 14.47 psia)

TANKS 4.0.9d
Emissions Report - Detail Format
Liquid Contents of Storage Tank

33S MGI Vent Scrubber - Horizontal Tank
Tupman, California

Mixture/Component	Month	Daily Liquid Surf. Temperature (deg F) Avg.	Min.	Max.	Liquid Bulk Temp (deg F)	Vapor Pressure (psia) Avg.	Min.	Max.	Vapor Mol. Weight.	Liquid Mass Fract.	Vapor Mass Fract.	Mol. Weight	Basis for Vapor Pressure Calculations
Crude oil (RVP 5)	Jan	58.62	54.46	62.78	65.42	2.8008	2.5782	3.0365	50.0000			207.00	Option 4: RVP=5
Crude oil (RVP 5)	Feb	61.49	56.39	66.58	65.42	2.9628	2.6797	3.2696	50.0000			207.00	Option 4: RVP=5
Crude oil (RVP 5)	Mar	63.85	57.94	69.77	65.42	3.1022	2.7631	3.4740	50.0000			207.00	Option 4: RVP=5
Crude oil (RVP 5)	Apr	66.98	60.01	73.95	65.42	3.2945	2.8784	3.7575	50.0000			207.00	Option 4: RVP=5
Crude oil (RVP 5)	May	71.00	63.30	78.70	65.42	3.5556	3.0691	4.1020	50.0000			207.00	Option 4: RVP=5
Crude oil (RVP 5)	Jun	74.47	66.32	82.63	65.42	3.7947	3.2534	4.4056	50.0000			207.00	Option 4: RVP=5
Crude oil (RVP 5)	Jul	77.01	68.80	85.22	65.42	3.9772	3.4110	4.6158	50.0000			207.00	Option 4: RVP=5
Crude oil (RVP 5)	Aug	76.03	68.25	83.81	65.42	3.9057	3.3754	4.5006	50.0000			207.00	Option 4: RVP=5
Crude oil (RVP 5)	Sep	72.96	65.93	79.98	65.42	3.6887	3.2288	4.1995	50.0000			207.00	Option 4: RVP=5
Crude oil (RVP 5)	Oct	68.33	62.00	74.66	65.42	3.3804	2.9925	3.8075	50.0000			207.00	Option 4: RVP=5
Crude oil (RVP 5)	Nov	62.38	57.33	67.44	65.42	3.0151	2.7298	3.3239	50.0000			207.00	Option 4: RVP=5
Crude oil (RVP 5)	Dec	58.39	54.32	62.46	65.42	2.7877	2.5707	3.0193	50.0000			207.00	Option 4: RVP=5

TANKS 4.0.9d
Emissions Report - Detail Format
Detail Calculations (AP-42)

33S MGI Vent Scrubber - Horizontal Tank
Tupman, California

Month:	January	February	March	April	May	June	July	August	September	October	November	December
Standing Losses (lb):												
Vapor Space Volume (cu ft):	1.5269	1.8409	2.5334	3.1501	3.9995	4.4886	4.9882	4.6000	3.7004	3.0460	2.0027	1.4823
Vapor Density (lb/cu ft):	36.0183	36.0183	36.0183	36.0183	36.0183	36.0183	36.0183	36.0183	36.0183	36.0183	36.0183	36.0183
Vapor Space Expansion Factor:	0.0252	0.0265	0.0276	0.0291	0.0312	0.0331	0.0345	0.0340	0.0323	0.0298	0.0269	0.0251
Vented Vapor Saturation Factor:	0.0664	0.0851	0.1024	0.1262	0.1472	0.1634	0.1703	0.1589	0.1372	0.1160	0.0854	0.0647
	0.8179	0.8094	0.8022	0.7924	0.7796	0.7682	0.7598	0.7631	0.7732	0.7882	0.8066	0.8186
Tank Vapor Space Volume:												
Vapor Space Volume (cu ft):	36.0183	36.0183	36.0183	36.0183	36.0183	36.0183	36.0183	36.0183	36.0183	36.0183	36.0183	36.0183
Tank Diameter (ft):	3.0000	3.0000	3.0000	3.0000	3.0000	3.0000	3.0000	3.0000	3.0000	3.0000	3.0000	3.0000
Effective Diameter (ft):	5.5293	5.5293	5.5293	5.5293	5.5293	5.5293	5.5293	5.5293	5.5293	5.5293	5.5293	5.5293
Vapor Space Outage (ft):	1.5000	1.5000	1.5000	1.5000	1.5000	1.5000	1.5000	1.5000	1.5000	1.5000	1.5000	1.5000
Tank Shell Length (ft):	8.0000	8.0000	8.0000	8.0000	8.0000	8.0000	8.0000	8.0000	8.0000	8.0000	8.0000	8.0000
Vapor Density												
Vapor Density (lb/cu ft):	0.0252	0.0265	0.0276	0.0291	0.0312	0.0331	0.0345	0.0340	0.0323	0.0298	0.0269	0.0251
Vapor Molecular Weight (lb/lb-mole):	50.0000	50.0000	50.0000	50.0000	50.0000	50.0000	50.0000	50.0000	50.0000	50.0000	50.0000	50.0000
Vapor Pressure at Daily Average Liquid Surface Temperature (psia):	2.8008	2.9628	3.1022	3.2945	3.5556	3.7947	3.9772	3.9057	3.6887	3.3804	3.0151	2.7877
Daily Avg. Liquid Surface Temp. (deg. R):	518.2922	521.1571	523.5218	526.6478	530.6669	534.1445	536.6832	535.7010	532.6256	527.9968	522.0547	518.0564
Daily Average Ambient Temp. (deg. F):	47.7500	53.2500	57.3500	63.0000	70.9500	78.2000	84.0500	82.5500	76.8000	67.7500	55.7500	47.4000
Ideal Gas Constant R (psia cuft / (lb-mol-deg R)):	10.731	10.731	10.731	10.731	10.731	10.731	10.731	10.731	10.731	10.731	10.731	10.731
Liquid Bulk Temperature (deg. R):	525.0900	525.0900	525.0900	525.0900	525.0900	525.0900	525.0900	525.0900	525.0900	525.0900	525.0900	525.0900
Tank Paint Solar Absorptance (Shell):	0.1700	0.1700	0.1700	0.1700	0.1700	0.1700	0.1700	0.1700	0.1700	0.1700	0.1700	0.1700
Daily Total Solar Insulation Factor (Btu/sqft day):	727.5001	1,058.7300	1,476.2573	1,952.7969	2,340.8181	2,554.9753	2,528.6419	2,288.7858	1,882.6802	1,401.0643	908.0267	666.5843
Vapor Space Expansion Factor												
Vapor Space Expansion Factor:	0.0664	0.0851	0.1024	0.1262	0.1472	0.1634	0.1703	0.1589	0.1372	0.1160	0.0854	0.0647
Daily Vapor Temperature Range (deg. R):	16.6389	20.3756	23.6590	27.8713	30.7983	32.6097	32.8443	31.1266	28.1136	25.3171	20.2342	16.2769
Daily Vapor Pressure Range (psia):	0.4603	0.5899	0.7109	0.8792	1.0329	1.1522	1.2048	1.1252	0.9707	0.8150	0.5941	0.4486
Breather Vent Press. Setting Range(psia):	0.0600	0.0600	0.0600	0.0600	0.0600	0.0600	0.0600	0.0600	0.0600	0.0600	0.0600	0.0600
Vapor Pressure at Daily Average Liquid Surface Temperature (psia):	2.8008	2.9628	3.1022	3.2945	3.5556	3.7947	3.9772	3.9057	3.6887	3.3804	3.0151	2.7877
Vapor Pressure at Daily Minimum Liquid Surface Temperature (psia):	2.5782	2.6797	2.7631	2.8784	3.0691	3.2534	3.4110	3.3754	3.2288	2.9925	2.7298	2.5707
Vapor Pressure at Daily Maximum Liquid Surface Temperature (psia):	3.0385	3.2696	3.4740	3.7575	4.1020	4.4056	4.6158	4.5006	4.1995	3.8075	3.3239	3.0193
Daily Avg. Liquid Surface Temp. (deg R):	518.2922	521.1571	523.5218	526.6478	530.6669	534.1445	536.6832	535.7010	532.6256	527.9968	522.0547	518.0564
Daily Min. Liquid Surface Temp. (deg R):	514.1325	516.0632	517.6071	519.6800	522.9673	525.9921	528.4721	527.9194	525.5973	521.6676	516.9961	513.9872
Daily Max. Liquid Surface Temp. (deg R):	522.4520	526.2510	529.4366	533.6156	538.3665	542.2970	544.8942	543.4827	539.6540	534.3261	527.1132	522.1257
Daily Ambient Temp. Range (deg. R):	18.3000	21.3000	23.1000	25.8000	27.3000	28.4000	28.9000	28.1000	26.6000	25.9000	22.1000	18.2000
Vented Vapor Saturation Factor												
Vented Vapor Saturation Factor:	0.8179	0.8094	0.8022	0.7924	0.7796	0.7682	0.7598	0.7631	0.7732	0.7882	0.8066	0.8186
Vapor Pressure at Daily Average Liquid: Surface Temperature (psia):	2.8008	2.9628	3.1022	3.2945	3.5556	3.7947	3.9772	3.9057	3.6887	3.3804	3.0151	2.7877
Vapor Space Outage (ft):	1.5000	1.5000	1.5000	1.5000	1.5000	1.5000	1.5000	1.5000	1.5000	1.5000	1.5000	1.5000
Working Losses (lb):												
Vapor Molecular Weight (lb/lb-mole):	0.0000	0.0000	0.0000	0.0000	0.0000	0.0000	0.0000	0.0000	0.0000	0.0000	0.0000	0.0000
Vapor Pressure at Daily Average Liquid Surface Temperature (psia):	50.0000	50.0000	50.0000	50.0000	50.0000	50.0000	50.0000	50.0000	50.0000	50.0000	50.0000	50.0000
Net Throughput (gal/mo.):	2.8008	2.9628	3.1022	3.2945	3.5556	3.7947	3.9772	3.9057	3.6887	3.3804	3.0151	2.7877
Annual Turnovers:	0.0000	0.0000	0.0000	0.0000	0.0000	0.0000	0.0000	0.0000	0.0000	0.0000	0.0000	0.0000
Turnover Factor:	0.0000	0.0000	0.0000	0.0000	0.0000	0.0000	0.0000	0.0000	0.0000	0.0000	0.0000	0.0000
Tank Diameter (ft):	1.0000	1.0000	1.0000	1.0000	1.0000	1.0000	1.0000	1.0000	1.0000	1.0000	1.0000	1.0000
Working Loss Product Factor:	3.0000	3.0000	3.0000	3.0000	3.0000	3.0000	3.0000	3.0000	3.0000	3.0000	3.0000	3.0000
	0.7500	0.7500	0.7500	0.7500	0.7500	0.7500	0.7500	0.7500	0.7500	0.7500	0.7500	0.7500
Total Losses (lb):	1.5269	1.8409	2.5334	3.1501	3.9995	4.4886	4.9882	4.6000	3.7004	3.0460	2.0027	1.4823

TANKS 4.0.9d
Emissions Report - Detail Format
Individual Tank Emission Totals

Emissions Report for: January, February, March, April, May, June, July, August, September, October, November, December

33S MGI Vent Scrubber - Horizontal Tank
Tupman, California

	Losses(lbs)		
Components	Working Loss	Breathing Loss	Total Emissions
Crude oil (RVP 5)	0.00	37.36	37.36

L

5-382-818

Fugitive VOC Emissions From Components
Calculated Using EPA ALR Emission Factors

Well Test Facility Site 34S Production Manifold D226

Type of Component	Component Service	Component Counts	Leak Threshold (ppmv)	Leak Fraction	EPA 1995 ALR TOG Factor lb/day*Component	Fugitive Emissions TOG (lb/Day)	VOC (lb/Day)	Methane (lb/Day)
Valves	Gas/Light Liquid	10	2,000	0.0000	7.392E-04	0.007	0.007	0.003
	Light Crude Oil	96	2,000	0.0000	7.392E-04	0.071	0.071	0.027
	Heavy Crude Oil	0	2,000	0.0000	4.118E-04	0.000	0.000	0.000
Pump Seals	Gas/Light Liquid	0	2,000	0.0000	1.214E-02	0.000	0.000	0.000
	Light Crude Oil	0	2,000	0.0000	1.003E-02	0.000	0.000	0.000
	Heavy Crude Oil	0	2,000	0.0000	0.000E+00	0.000	0.000	0.000
Others	Gas/Light Liquid	0	2,000	0.0000	2.376E-03	0.000	0.000	0.000
	Light Crude Oil	0	2,000	0.0000	3.379E-03	0.000	0.000	0.000
	Heavy Crude Oil	0	2,000	0.0000	1.690E-03	0.000	0.000	0.000
Connectors	Gas/Light Liquid	3	2,000	0.0000	4.488E-04	0.001	0.001	0.001
	Light Crude Oil	29	2,000	0.0000	4.541E-04	0.013	0.013	0.005
	Heavy Crude Oil	0	2,000	0.0000	0.000E+00	0.000	0.000	0.000
Flanges	Gas/Light Liquid	22	2,000	0.0000	1.373E-04	0.003	0.003	0.001
	Light Crude Oil	195	2,000	0.0000	8.448E-05	0.016	0.016	0.006
	Heavy Crude Oil	0	2,000	0.0000	0.000E+00	0.000	0.000	0.000
Open-ended Lines	Gas/Light Liquid	0	2,000	0.0000	3.960E-04	0.000	0.000	0.000
	Light Crude Oil	0	2,000	0.0000	3.538E-04	0.000	0.000	0.000
	Heavy Crude Oil	0	2,000	0.0000	3.168E-04	0.000	0.000	0.000
Total Fugitive VOC Emissions From Associated Components (lb/day)						0.112	0.112	0.042

Gas	VOC content (%) of TOG	100.00	Methane content (%) of TOG	37.50
Liquid	VOC content (%) of TOG	100.00	Methane content (%) of TOG	37.50

Fugitive VOC Emissions From Components
Calculated Using EPA ALR Emission Factors

Well Test Facility Site 34S Test Separator D230

Type of Component	Component Service	Component Counts	Leak Threshold (ppmv)	Leak Fraction	EPA 1995 ALR TOG Factor lb/day*Component	Fugitive Emissions TOG (lb/Day)	VOC (lb/Day)	Methane (lb/Day)
Valves	Gas/Light Liquid	44	2,000	0.0000	7.392E-04	0.033	0.033	0.012
	Light Crude Oil	54	2,000	0.0000	7.392E-04	0.040	0.040	0.015
	Heavy Crude Oil	0	2,000	0.0000	4.118E-04	0.000	0.000	0.000
Pump Seals	Gas/Light Liquid	0	2,000	0.0000	1.214E-02	0.000	0.000	0.000
	Light Crude Oil	0	2,000	0.0000	1.003E-02	0.000	0.000	0.000
	Heavy Crude Oil	0	2,000	0.0000	0.000E+00	0.000	0.000	0.000
Others	Gas/Light Liquid	3	2,000	0.0000	2.376E-03	0.007	0.007	0.003
	Light Crude Oil	5	2,000	0.0000	3.379E-03	0.017	0.017	0.006
	Heavy Crude Oil	0	2,000	0.0000	1.690E-03	0.000	0.000	0.000
Connectors	Gas/Light Liquid	62	2,000	0.0000	4.488E-04	0.028	0.028	0.010
	Light Crude Oil	88	2,000	0.0000	4.541E-04	0.040	0.040	0.015
	Heavy Crude Oil	0	2,000	0.0000	0.000E+00	0.000	0.000	0.000
Flanges	Gas/Light Liquid	36	2,000	0.0000	1.373E-04	0.005	0.005	0.002
	Light Crude Oil	48	2,000	0.0000	8.448E-05	0.004	0.004	0.002
	Heavy Crude Oil	0	2,000	0.0000	0.000E+00	0.000	0.000	0.000
Open-ended Lines	Gas/Light Liquid	0	2,000	0.0000	3.960E-04	0.000	0.000	0.000
	Light Crude Oil	0	2,000	0.0000	3.538E-04	0.000	0.000	0.000
	Heavy Crude Oil	0	2,000	0.0000	3.168E-04	0.000	0.000	0.000
Total Fugitive VOC Emissions From Associated Components (lb/day)						0.173	0.173	0.065

Gas	VOC content (%) of TOG	100.00	Methane content (%) of TOG	37.50
Liquid	VOC content (%) of TOG	100.00	Methane content (%) of TOG	37.50

Fugitive VOC Emissions From Components
Calculated Using EPA ALR Emission Factors

Well Test Facility Site 34S Production Separator D231

Type of Component	Component Service	Component Counts	Leak Threshold (ppmv)	Leak Fraction	EPA 1995 ALR TOG Factor lb/day*Component	Fugitive Emissions TOG (lb/Day)	VOC (lb/Day)	Methane (lb/Day)
Valves	Gas/Light Liquid	36	2,000	0.0000	7.392E-04	0.027	0.027	0.010
	Light Crude Oil	38	2,000	0.0000	7.392E-04	0.028	0.028	0.011
	Heavy Crude Oil	0	2,000	0.0000	4.118E-04	0.000	0.000	0.000
Pump Seals	Gas/Light Liquid	0	2,000	0.0000	1.214E-02	0.000	0.000	0.000
	Light Crude Oil	0	2,000	0.0000	1.003E-02	0.000	0.000	0.000
	Heavy Crude Oil	0	2,000	0.0000	0.000E+00	0.000	0.000	0.000
Others	Gas/Light Liquid	3	2,000	0.0000	2.376E-03	0.007	0.007	0.003
	Light Crude Oil	3	2,000	0.0000	3.379E-03	0.010	0.010	0.004
	Heavy Crude Oil	0	2,000	0.0000	1.690E-03	0.000	0.000	0.000
Connectors	Gas/Light Liquid	60	2,000	0.0000	4.488E-04	0.027	0.027	0.010
	Light Crude Oil	64	2,000	0.0000	4.541E-04	0.029	0.029	0.011
	Heavy Crude Oil	0	2,000	0.0000	0.000E+00	0.000	0.000	0.000
Flanges	Gas/Light Liquid	32	2,000	0.0000	1.373E-04	0.004	0.004	0.002
	Light Crude Oil	23	2,000	0.0000	8.448E-05	0.002	0.002	0.001
	Heavy Crude Oil	0	2,000	0.0000	0.000E+00	0.000	0.000	0.000
Open-ended Lines	Gas/Light Liquid	0	2,000	0.0000	3.960E-04	0.000	0.000	0.000
	Light Crude Oil	0	2,000	0.0000	3.538E-04	0.000	0.000	0.000
	Heavy Crude Oil	0	2,000	0.0000	3.168E-04	0.000	0.000	0.000
Total Fugitive VOC Emissions From Associated Components (lb/day)						0.134	0.134	0.050

Gas	VOC content (%) of TOG	100.00	Methane content (%) of TOG	37.50
Liquid	VOC content (%) of TOG	100.00	Methane content (%) of TOG	37.50

Fugitive VOC Emissions From Components
Calculated Using EPA ALR Emission Factors

Production Well Test Facility Site 34S Vent System D232

Type of Component	Component Service	Component Counts	Leak Threshold (ppmv)	Leak Fraction	EPA 1995 ALR TOG Factor lb/day*Component	Fugitive Emissions TOG (lb/Day)	VOC (lb/Day)	Methane (lb/Day)
Valves	Gas/Light Liquid	16	2,000	0.0000	7.392E-04	0.012	0.012	0.004
	Light Crude Oil	0	2,000	0.0000	7.392E-04	0.000	0.000	0.000
	Heavy Crude Oil	0	2,000	0.0000	4.118E-04	0.000	0.000	0.000
Pump Seals	Gas/Light Liquid	0	2,000	0.0000	1.214E-02	0.000	0.000	0.000
	Light Crude Oil	0	2,000	0.0000	1.003E-02	0.000	0.000	0.000
	Heavy Crude Oil	0	2,000	0.0000	0.000E+00	0.000	0.000	0.000
Others	Gas/Light Liquid	3	2,000	0.0000	2.376E-03	0.007	0.007	0.003
	Light Crude Oil	0	2,000	0.0000	3.379E-03	0.000	0.000	0.000
	Heavy Crude Oil	0	2,000	0.0000	1.690E-03	0.000	0.000	0.000
Connectors	Gas/Light Liquid	27	2,000	0.0000	4.488E-04	0.012	0.012	0.005
	Light Crude Oil	0	2,000	0.0000	4.541E-04	0.000	0.000	0.000
	Heavy Crude Oil	0	2,000	0.0000	0.000E+00	0.000	0.000	0.000
Flanges	Gas/Light Liquid	26	2,000	0.0000	1.373E-04	0.004	0.004	0.001
	Light Crude Oil	8	2,000	0.0000	8.448E-05	0.001	0.001	0.000
	Heavy Crude Oil	0	2,000	0.0000	0.000E+00	0.000	0.000	0.000
Open-ended Lines	Gas/Light Liquid	0	2,000	0.0000	3.960E-04	0.000	0.000	0.000
	Light Crude Oil	0	2,000	0.0000	3.538E-04	0.000	0.000	0.000
	Heavy Crude Oil	0	2,000	0.0000	3.168E-04	0.000	0.000	0.000
Total Fugitive VOC Emissions From Associated Components (lb/day)						0.035	0.035	0.013

Gas	VOC content (%) of TOG	100.00	Methane content (%) of TOG	37.50
Liquid	VOC content (%) of TOG	100.00	Methane content (%) of TOG	37.50

TANKS 4.0.9d
Emissions Report - Detail Format
Tank Indentification and Physical Characteristics

Identification

User Identification:	34S MGI Vent Scrubber
City:	Tupman
State:	California
Company:	Occidental Of Elk Hills, Inc.
Type of Tank:	Horizontal Tank
Description:	34S MGI Vent Scrubber V-100 Horizontal Tank

Tank Dimensions

Shell Length (ft):		8.00
Diameter (ft):		3.00
Volume (gallons):		423.00
Turnovers:		0.00
Net Throughput(gal/yr):		0.00
Is Tank Heated (y/n):	N	
Is Tank Underground (y/n):	N	

Paint Characteristics

Shell Color/Shade:	White/White
Shell Condition	Good

Breather Vent Settings

Vacuum Settings (psig):	-0.03
Pressure Settings (psig)	0.03

Meterological Data used in Emissions Calculations: Bakersfield, California (Avg Atmospheric Pressure = 14.47 psia)

TANKS 4.0.d
Emissions Report - Detail Format
Liquid Contents of Storage Tank

34S MGI Vent Scrubber - Horizontal Tank
Tupman, California

Mixture/Component	Month	Daily Liquid Surf. Temperature (deg F) Avg.	Min.	Max.	Liquid Bulk Temp (deg F)	Vapor Pressure (psia) Avg.	Min.	Max.	Vapor Mol. Weight.	Liquid Mass Fract.	Vapor Mass Fract.	Mol. Weight	Basis for Vapor Pressure Calculations
Crude oil (RVP 5)	Jan	58.62	54.46	62.78	65.42	2.8008	2.5782	3.0385	50.0000			207.00	Option 4: RVP=5
Crude oil (RVP 5)	Feb	61.49	56.39	66.58	65.42	2.9628	2.6797	3.2696	50.0000			207.00	Option 4: RVP=5
Crude oil (RVP 5)	Mar	63.85	57.94	69.77	65.42	3.1022	2.7631	3.4740	50.0000			207.00	Option 4: RVP=5
Crude oil (RVP 5)	Apr	66.98	60.01	73.95	65.42	3.2945	2.8784	3.7575	50.0000			207.00	Option 4: RVP=5
Crude oil (RVP 5)	May	71.00	63.30	78.70	65.42	3.5556	3.0691	4.1020	50.0000			207.00	Option 4: RVP=5
Crude oil (RVP 5)	Jun	74.47	66.32	82.63	65.42	3.7947	3.2534	4.4056	50.0000			207.00	Option 4: RVP=5
Crude oil (RVP 5)	Jul	77.01	68.80	85.22	65.42	3.9772	3.4110	4.6158	50.0000			207.00	Option 4: RVP=5
Crude oil (RVP 5)	Aug	76.03	68.25	83.81	65.42	3.9057	3.3754	4.5006	50.0000			207.00	Option 4: RVP=5
Crude oil (RVP 5)	Sep	72.96	65.93	79.98	65.42	3.6887	3.2288	4.1995	50.0000			207.00	Option 4: RVP=5
Crude oil (RVP 5)	Oct	68.33	62.00	74.66	65.42	3.3804	2.9925	3.8075	50.0000			207.00	Option 4: RVP=5
Crude oil (RVP 5)	Nov	62.38	57.33	67.44	65.42	3.0151	2.7298	3.3239	50.0000			207.00	Option 4: RVP=5
Crude oil (RVP 5)	Dec	58.39	54.32	62.46	65.42	2.7877	2.5707	3.0193	50.0000			207.00	Option 4: RVP=5

TANKS 4.0.9d
Emissions Report - Detail Format
Individual Tank Emission Totals

Emissions Report for: January, February, March, April, May, June, July, August, September, October, November, December

34S MGI Vent Scrubber - Horizontal Tank
Tupman, California

	Losses(lbs)		
Components	Working Loss	Breathing Loss	Total Emissions
Crude oil (RVP 5)	0.00	37.36	37.36

TANKS 4.0.d
Emissions Report - Detail Format
Detail Calculations (AP-42)

34S MGI Vent Scrubber - Horizontal Tank
Tupman, California

Month:	January	February	March	April	May	June	July	August	September	October	November	December
Standing Losses (lb):	1.5269	1.8409	2.5334	3.1501	3.9995	4.4886	4.9882	4.6000	3.7004	3.0460	2.0027	1.4823
Vapor Space Volume (cu ft):	36.0183	36.0183	36.0183	36.0183	36.0183	36.0183	36.0183	36.0183	36.0183	36.0183	36.0183	36.0183
Vapor Density (lb/cu ft):	0.0252	0.0265	0.0276	0.0291	0.0312	0.0331	0.0345	0.0340	0.0323	0.0298	0.0269	0.0251
Vapor Space Expansion Factor:	0.0664	0.0851	0.1024	0.1262	0.1472	0.1634	0.1703	0.1589	0.1372	0.1160	0.0854	0.0647
Vented Vapor Saturation Factor:	0.8179	0.8094	0.8022	0.7924	0.7796	0.7682	0.7598	0.7631	0.7732	0.7882	0.8066	0.8186
Tank Vapor Space Volume:												
Vapor Space Volume (cu ft):	36.0183	36.0183	36.0183	36.0183	36.0183	36.0183	36.0183	36.0183	36.0183	36.0183	36.0183	36.0183
Tank Diameter (ft):	3.0000	3.0000	3.0000	3.0000	3.0000	3.0000	3.0000	3.0000	3.0000	3.0000	3.0000	3.0000
Effective Diameter (ft):	5.5293	5.5293	5.5293	5.5293	5.5293	5.5293	5.5293	5.5293	5.5293	5.5293	5.5293	5.5293
Vapor Space Outage (ft):	1.5000	1.5000	1.5000	1.5000	1.5000	1.5000	1.5000	1.5000	1.5000	1.5000	1.5000	1.5000
Tank Shell Length (ft):	8.0000	8.0000	8.0000	8.0000	8.0000	8.0000	8.0000	8.0000	8.0000	8.0000	8.0000	8.0000
Vapor Density												
Vapor Density (lb/cu ft):	0.0252	0.0265	0.0276	0.0291	0.0312	0.0331	0.0345	0.0340	0.0323	0.0298	0.0269	0.0251
Vapor Molecular Weight (lb/lb-mole):	50.0000	50.0000	50.0000	50.0000	50.0000	50.0000	50.0000	50.0000	50.0000	50.0000	50.0000	50.0000
Vapor Pressure at Daily Average Liquid Surface Temperature (psia):	2.8008	2.9628	3.1022	3.2945	3.5556	3.7947	3.9772	3.9057	3.6887	3.3804	3.0151	2.7877
Daily Avg. Liquid Surface Temp. (deg. R):	518.2922	521.1571	523.5218	526.6478	530.6669	534.1445	536.6832	535.7010	532.6256	527.9968	522.0547	518.0564
Daily Average Ambient Temp. (deg. F):	47.7500	53.2500	57.3500	63.0000	70.9500	78.2000	84.0500	82.5500	76.8000	67.7500	55.7500	47.4000
Ideal Gas Constant R (psia cuft / (lb-mol-deg R)):	10.731	10.731	10.731	10.731	10.731	10.731	10.731	10.731	10.731	10.731	10.731	10.731
Liquid Bulk Temperature (deg. R):	525.0900	525.0900	525.0900	525.0900	525.0900	525.0900	525.0900	525.0900	525.0900	525.0900	525.0900	525.0900
Tank Paint Solar Absorptance (Shell):	0.1700	0.1700	0.1700	0.1700	0.1700	0.1700	0.1700	0.1700	0.1700	0.1700	0.1700	0.1700
Daily Total Solar Insulation Factor (Btu/sqft day):	727.5001	1,058.7300	1,476.2573	1,952.7969	2,340.8181	2,554.9753	2,528.6419	2,288.7858	1,882.6802	1,401.0643	908.0267	666.5843
Vapor Space Expansion Factor												
Vapor Space Expansion Factor:	0.0664	0.0851	0.1024	0.1262	0.1472	0.1634	0.1703	0.1589	0.1372	0.1160	0.0854	0.0647
Daily Vapor Temperature Range (deg. R):	16.6389	20.3756	23.6590	27.8713	30.7983	32.6097	32.8443	31.1266	28.1136	25.3171	20.2342	16.2769
Daily Vapor Pressure Range (psia):	0.4603	0.5899	0.7109	0.8792	1.0329	1.1522	1.2048	1.1252	0.9707	0.8150	0.5941	0.4486
Breather Vent Press. Setting Range(psia):	0.0600	0.0600	0.0600	0.0600	0.0600	0.0600	0.0600	0.0600	0.0600	0.0600	0.0600	0.0600
Vapor Pressure at Daily Average Liquid Surface Temperature (psia):	2.8008	2.9628	3.1022	3.2945	3.5556	3.7947	3.9772	3.9057	3.6887	3.3804	3.0151	2.7877
Vapor Pressure at Daily Minimum Liquid Surface Temperature (psia):	2.5782	2.6797	2.7631	2.8784	3.0691	3.2534	3.4110	3.3754	3.2288	2.9925	2.7298	2.5707
Vapor Pressure at Daily Maximum Liquid Surface Temperature (psia):	3.0385	3.2696	3.4740	3.7575	4.1020	4.4056	4.6158	4.5006	4.1995	3.8075	3.3239	3.0193
Daily Avg. Liquid Surface Temp. (deg R):	518.2922	521.1571	523.5218	526.6478	530.6669	534.1445	536.6832	535.7010	532.6256	527.9968	522.0547	518.0564
Daily Min. Liquid Surface Temp. (deg R):	514.1325	516.0632	517.6071	519.6800	522.9673	525.9921	528.4721	527.9194	525.5973	521.6676	516.9961	513.9872
Daily Max. Liquid Surface Temp. (deg R):	522.4520	526.2510	529.4366	533.6156	538.3665	542.2970	544.8942	543.4827	539.6540	534.3261	527.1132	522.1257
Daily Ambient Temp. Range (deg. R):	18.3000	21.3000	23.1000	25.8000	27.3000	28.4000	28.9000	28.1000	26.6000	25.9000	22.1000	18.2000
Vented Vapor Saturation Factor												
Vented Vapor Saturation Factor:	0.8179	0.8094	0.8022	0.7924	0.7796	0.7682	0.7598	0.7631	0.7732	0.7882	0.8066	0.8186
Vapor Pressure at Daily Average Liquid: Surface Temperature (psia):	2.8008	2.9628	3.1022	3.2945	3.5556	3.7947	3.9772	3.9057	3.6887	3.3804	3.0151	2.7877
Vapor Space Outage (ft):	1.5000	1.5000	1.5000	1.5000	1.5000	1.5000	1.5000	1.5000	1.5000	1.5000	1.5000	1.5000
Working Losses (lb):	0.0000	0.0000	0.0000	0.0000	0.0000	0.0000	0.0000	0.0000	0.0000	0.0000	0.0000	0.0000
Vapor Molecular Weight (lb/lb-mole):	50.0000	50.0000	50.0000	50.0000	50.0000	50.0000	50.0000	50.0000	50.0000	50.0000	50.0000	50.0000
Vapor Pressure at Daily Average Liquid Surface Temperature (psia):	2.8008	2.9628	3.1022	3.2945	3.5556	3.7947	3.9772	3.9057	3.6887	3.3804	3.0151	2.7877
Net Throughput (gal/mo.):	0.0000	0.0000	0.0000	0.0000	0.0000	0.0000	0.0000	0.0000	0.0000	0.0000	0.0000	0.0000
Annual Turnovers:	0.0000	0.0000	0.0000	0.0000	0.0000	0.0000	0.0000	0.0000	0.0000	0.0000	0.0000	0.0000
Turnover Factor:	1.0000	1.0000	1.0000	1.0000	1.0000	1.0000	1.0000	1.0000	1.0000	1.0000	1.0000	1.0000
Tank Diameter (ft):	3.0000	3.0000	3.0000	3.0000	3.0000	3.0000	3.0000	3.0000	3.0000	3.0000	3.0000	3.0000
Working Loss Product Factor:	0.7500	0.7500	0.7500	0.7500	0.7500	0.7500	0.7500	0.7500	0.7500	0.7500	0.7500	0.7500
Total Losses (lb):	1.5269	1.8409	2.5334	3.1501	3.9995	4.4886	4.9882	4.6000	3.7004	3.0460	2.0027	1.4823

L

Fugitive VOC Emissions From Components Calculated Using EPA ALR Emission Factors

5-382-819

Glycol Dehydration Unit D-061

Type of Component	Component Service	Component Counts	Leak Threshold (ppmv)	Leak Fraction	EPA 1995 ALR TOG Factor lb/day*Component	Fugitive Emissions TOG (lb/Day)	VOC (lb/Day)	Methane (lb/Day)
Valves	Gas/Light Liquid	41	2,000	0.0000	7.392E-04	0.030	0.030	0.011
	Light Crude Oil	9	2,000	0.0000	7.392E-04	0.007	0.007	0.002
	Heavy Crude Oil	0	2,000	0.0000	4.118E-04	0.000	0.000	0.000
Pump Seals	Gas/Light Liquid	0	2,000	0.0000	1.214E-02	0.000	0.000	0.000
	Light Crude Oil	0	2,000	0.0000	1.003E-02	0.000	0.000	0.000
	Heavy Crude Oil	0	2,000	0.0000	0.000E+00	0.000	0.000	0.000
Others	Gas/Light Liquid	3	2,000	0.0000	2.376E-03	0.007	0.007	0.003
	Light Crude Oil	2	2,000	0.0000	3.379E-03	0.007	0.007	0.003
	Heavy Crude Oil	0	2,000	0.0000	1.690E-03	0.000	0.000	0.000
Connectors	Gas/Light Liquid	48	2,000	0.0000	4.488E-04	0.022	0.022	0.008
	Light Crude Oil	8	2,000	0.0000	4.541E-04	0.004	0.004	0.001
	Heavy Crude Oil	0	2,000	0.0000	0.000E+00	0.000	0.000	0.000
Flanges	Gas/Light Liquid	86	2,000	0.0000	1.373E-04	0.012	0.012	0.004
	Light Crude Oil	17	2,000	0.0000	8.448E-05	0.001	0.001	0.001
	Heavy Crude Oil	0	2,000	0.0000	0.000E+00	0.000	0.000	0.000
Open-ended Lines	Gas/Light Liquid	0	2,000	0.0000	3.960E-04	0.000	0.000	0.000
	Light Crude Oil	0	2,000	0.0000	3.538E-04	0.000	0.000	0.000
	Heavy Crude Oil	0	2,000	0.0000	3.168E-04	0.000	0.000	0.000
Total Fugitive VOC Emissions From Associated Components (lb/day)						0.089	0.089	0.033

Gas	VOC content (%) of TOG	100.00	Methane content (%) of TOG	37.50
Liquid	VOC content (%) of TOG	100.00	Methane content (%) of TOG	37.50

Fugitive VOC Emissions From Components
Calculated Using EPA ALR Emission Factors

Glycol Dehydration Unit D-062

Type of Component	Component Service	Component Counts	Leak Threshold (ppmv)	Leak Fraction	EPA 1995 ALR TOG Factor lb/day*Component	Fugitive Emissions TOG (lb/Day)	VOC (lb/Day)	Methane (lb/Day)
Valves	Gas/Light Liquid	16	2,000	0.0000	7.392E-04	0.012	0.012	0.004
	Light Crude Oil	50	2,000	0.0000	7.392E-04	0.037	0.037	0.014
	Heavy Crude Oil	0	2,000	0.0000	4.118E-04	0.000	0.000	0.000
Pump Seals	Gas/Light Liquid	0	2,000	0.0000	1.214E-02	0.000	0.000	0.000
	Light Crude Oil	0	2,000	0.0000	1.003E-02	0.000	0.000	0.000
	Heavy Crude Oil	0	2,000	0.0000	0.000E+00	0.000	0.000	0.000
Others	Gas/Light Liquid	0	2,000	0.0000	2.376E-03	0.000	0.000	0.000
	Light Crude Oil	2	2,000	0.0000	3.379E-03	0.007	0.007	0.003
	Heavy Crude Oil	0	2,000	0.0000	1.690E-03	0.000	0.000	0.000
Connectors	Gas/Light Liquid	18	2,000	0.0000	4.488E-04	0.008	0.008	0.003
	Light Crude Oil	51	2,000	0.0000	4.541E-04	0.023	0.023	0.009
	Heavy Crude Oil	0	2,000	0.0000	0.000E+00	0.000	0.000	0.000
Flanges	Gas/Light Liquid	36	2,000	0.0000	1.373E-04	0.005	0.005	0.002
	Light Crude Oil	122	2,000	0.0000	8.448E-05	0.010	0.010	0.004
	Heavy Crude Oil	0	2,000	0.0000	0.000E+00	0.000	0.000	0.000
Open-ended Lines	Gas/Light Liquid	0	2,000	0.0000	3.960E-04	0.000	0.000	0.000
	Light Crude Oil	0	2,000	0.0000	3.538E-04	0.000	0.000	0.000
	Heavy Crude Oil	0	2,000	0.0000	3.168E-04	0.000	0.000	0.000
Total Fugitive VOC Emissions From Associated Components (lb/day)						0.102	0.102	0.038

Gas	VOC content (%) of TOG	100.00	Methane content (%) of TOG	37.50
Liquid	VOC content (%) of TOG	100.00	Methane content (%) of TOG	37.50

Fugitive VOC Emissions From Components
Calculated Using EPA ALR Emission Factors

Glycol Dehydration Unit D-063

Type of Component	Component Service	Component Counts	Leak Threshold (ppmv)	Leak Fraction	EPA 1995 ALR TOG Factor lb/day*Component	Fugitive Emissions TOG (lb/Day)	VOC (lb/Day)	Methane (lb/Day)
Valves	Gas/Light Liquid	15	2,000	0.0000	7.392E-04	0.011	0.011	0.004
	Light Crude Oil	58	2,000	0.0000	7.392E-04	0.043	0.043	0.016
	Heavy Crude Oil	0	2,000	0.0000	4.118E-04	0.000	0.000	0.000
Pump Seals	Gas/Light Liquid	0	2,000	0.0000	1.214E-02	0.000	0.000	0.000
	Light Crude Oil	0	2,000	0.0000	1.003E-02	0.000	0.000	0.000
	Heavy Crude Oil	0	2,000	0.0000	0.000E+00	0.000	0.000	0.000
Others	Gas/Light Liquid	0	2,000	0.0000	2.376E-03	0.000	0.000	0.000
	Light Crude Oil	3	2,000	0.0000	3.379E-03	0.010	0.010	0.004
	Heavy Crude Oil	0	2,000	0.0000	1.690E-03	0.000	0.000	0.000
Connectors	Gas/Light Liquid	18	2,000	0.0000	4.488E-04	0.008	0.008	0.003
	Light Crude Oil	53	2,000	0.0000	4.541E-04	0.024	0.024	0.009
	Heavy Crude Oil	0	2,000	0.0000	0.000E+00	0.000	0.000	0.000
Flanges	Gas/Light Liquid	30	2,000	0.0000	1.373E-04	0.004	0.004	0.002
	Light Crude Oil	126	2,000	0.0000	8.448E-05	0.011	0.011	0.004
	Heavy Crude Oil	0	2,000	0.0000	0.000E+00	0.000	0.000	0.000
Open-ended Lines	Gas/Light Liquid	0	2,000	0.0000	3.960E-04	0.000	0.000	0.000
	Light Crude Oil	0	2,000	0.0000	3.538E-04	0.000	0.000	0.000
	Heavy Crude Oil	0	2,000	0.0000	3.168E-04	0.000	0.000	0.000
Total Fugitive VOC Emissions From Associated Components (lb/day)						0.111	0.111	0.042

Gas	VOC content (%) of TOG	100.00	Methane content (%) of TOG	37.50
Liquid	VOC content (%) of TOG	100.00	Methane content (%) of TOG	37.50

Fugitive VOC Emissions From Components
Calculated Using EPA ALR Emission Factors

Glycol Dehydration Unit D-066

Type of Component	Component Service	Component Counts	Leak Threshold (ppmv)	Leak Fraction	EPA 1995 ALR TOG Factor lb/day*Component	Fugitive Emissions TOG (lb/Day)	Fugitive Emissions VOC (lb/Day)	Fugitive Emissions Methane (lb/Day)
Valves	Gas/Light Liquid	22	2,000	0.0000	7.392E-04	0.016	0.016	0.006
	Light Crude Oil	44	2,000	0.0000	7.392E-04	0.033	0.033	0.012
	Heavy Crude Oil	0	2,000	0.0000	4.118E-04	0.000	0.000	0.000
Pump Seals	Gas/Light Liquid	0	2,000	0.0000	1.214E-02	0.000	0.000	0.000
	Light Crude Oil	0	2,000	0.0000	1.003E-02	0.000	0.000	0.000
	Heavy Crude Oil	0	2,000	0.0000	0.000E+00	0.000	0.000	0.000
Others	Gas/Light Liquid	5	2,000	0.0000	2.376E-03	0.012	0.012	0.004
	Light Crude Oil	2	2,000	0.0000	3.379E-03	0.007	0.007	0.003
	Heavy Crude Oil	0	2,000	0.0000	1.690E-03	0.000	0.000	0.000
Connectors	Gas/Light Liquid	54	2,000	0.0000	4.488E-04	0.024	0.024	0.009
	Light Crude Oil	44	2,000	0.0000	4.541E-04	0.020	0.020	0.007
	Heavy Crude Oil	0	2,000	0.0000	0.000E+00	0.000	0.000	0.000
Flanges	Gas/Light Liquid	11	2,000	0.0000	1.373E-04	0.002	0.002	0.001
	Light Crude Oil	105	2,000	0.0000	8.448E-05	0.009	0.009	0.003
	Heavy Crude Oil	0	2,000	0.0000	0.000E+00	0.000	0.000	0.000
Open-ended Lines	Gas/Light Liquid	0	2,000	0.0000	3.960E-04	0.000	0.000	0.000
	Light Crude Oil	0	2,000	0.0000	3.538E-04	0.000	0.000	0.000
	Heavy Crude Oil	0	2,000	0.0000	3.168E-04	0.000	0.000	0.000
Total Fugitive VOC Emissions From Associated Components (lb/day)						0.122	0.122	0.046

Gas	VOC content (%) of TOG	100.00	Methane content (%) of TOG	37.50
Liquid	VOC content (%) of TOG	100.00	Methane content (%) of TOG	37.50

Fugitive VOC Emissions From Components
Calculated Using EPA ALR Emission Factors

Glycol Dehydration Unit D-067

Type of Component	Component Service	Component Counts	Leak Threshold (ppmv)	Leak Fraction	EPA 1995 ALR TOG Factor lb/day*Component	Fugitive Emissions TOG (lb/Day)	VOC (lb/Day)	Methane (lb/Day)
Valves	Gas/Light Liquid	0	2,000	0.0000	7.392E-04	0.000	0.000	0.000
	Light Crude Oil	42	2,000	0.0000	7.392E-04	0.031	0.031	0.012
	Heavy Crude Oil	0	2,000	0.0000	4.118E-04	0.000	0.000	0.000
Pump Seals	Gas/Light Liquid	0	2,000	0.0000	1.214E-02	0.000	0.000	0.000
	Light Crude Oil	0	2,000	0.0000	1.003E-02	0.000	0.000	0.000
	Heavy Crude Oil	0	2,000	0.0000	0.000E+00	0.000	0.000	0.000
Others	Gas/Light Liquid	0	2,000	0.0000	2.376E-03	0.000	0.000	0.000
	Light Crude Oil	2	2,000	0.0000	3.379E-03	0.007	0.007	0.003
	Heavy Crude Oil	0	2,000	0.0000	1.690E-03	0.000	0.000	0.000
Connectors	Gas/Light Liquid	0	2,000	0.0000	4.488E-04	0.000	0.000	0.000
	Light Crude Oil	83	2,000	0.0000	4.541E-04	0.038	0.038	0.014
	Heavy Crude Oil	0	2,000	0.0000	0.000E+00	0.000	0.000	0.000
Flanges	Gas/Light Liquid	0	2,000	0.0000	1.373E-04	0.000	0.000	0.000
	Light Crude Oil	40	2,000	0.0000	8.448E-05	0.003	0.003	0.001
	Heavy Crude Oil	0	2,000	0.0000	0.000E+00	0.000	0.000	0.000
Open-ended Lines	Gas/Light Liquid	0	2,000	0.0000	3.960E-04	0.000	0.000	0.000
	Light Crude Oil	0	2,000	0.0000	3.538E-04	0.000	0.000	0.000
	Heavy Crude Oil	0	2,000	0.0000	3.168E-04	0.000	0.000	0.000
Total Fugitive VOC Emissions From Associated Components (lb/day)						0.079	0.079	0.030

Gas	VOC content (%) of TOG	100.00	Methane content (%) of TOG	37.50
Liquid	VOC content (%) of TOG	100.00	Methane content (%) of TOG	37.50

Fugitive VOC Emissions From Components
Calculated Using EPA ALR Emission Factors

Glycol Dehydration Unit D-068

Type of Component	Component Service	Component Counts	Leak Threshold (ppmv)	Leak Fraction	EPA 1995 ALR TOG Factor lb/day*Component	Fugitive Emissions TOG (lb/Day)	VOC (lb/Day)	Methane (lb/Day)
Valves	Gas/Light Liquid	0	2,000	0.0000	7.392E-04	0.000	0.000	0.000
	Light Crude Oil	29	2,000	0.0000	7.392E-04	0.021	0.021	0.008
	Heavy Crude Oil	0	2,000	0.0000	4.118E-04	0.000	0.000	0.000
Pump Seals	Gas/Light Liquid	0	2,000	0.0000	1.214E-02	0.000	0.000	0.000
	Light Crude Oil	3	2,000	0.0000	1.003E-02	0.030	0.030	0.011
	Heavy Crude Oil	0	2,000	0.0000	0.000E+00	0.000	0.000	0.000
Others	Gas/Light Liquid	0	2,000	0.0000	2.376E-03	0.000	0.000	0.000
	Light Crude Oil	0	2,000	0.0000	3.379E-03	0.000	0.000	0.000
	Heavy Crude Oil	0	2,000	0.0000	1.690E-03	0.000	0.000	0.000
Connectors	Gas/Light Liquid	0	2,000	0.0000	4.488E-04	0.000	0.000	0.000
	Light Crude Oil	65	2,000	0.0000	4.541E-04	0.030	0.030	0.011
	Heavy Crude Oil	0	2,000	0.0000	0.000E+00	0.000	0.000	0.000
Flanges	Gas/Light Liquid	0	2,000	0.0000	1.373E-04	0.000	0.000	0.000
	Light Crude Oil	22	2,000	0.0000	8.448E-05	0.002	0.002	0.001
	Heavy Crude Oil	0	2,000	0.0000	0.000E+00	0.000	0.000	0.000
Open-ended Lines	Gas/Light Liquid	0	2,000	0.0000	3.960E-04	0.000	0.000	0.000
	Light Crude Oil	0	2,000	0.0000	3.538E-04	0.000	0.000	0.000
	Heavy Crude Oil	0	2,000	0.0000	3.168E-04	0.000	0.000	0.000
Total Fugitive VOC Emissions From Associated Components (lb/day)						0.083	0.083	0.031

Gas	VOC content (%) of TOG	100.00	Methane content (%) of TOG	37.50
Liquid	VOC content (%) of TOG	100.00	Methane content (%) of TOG	37.50

Fugitive VOC Emissions From Components
Calculated Using EPA ALR Emission Factors

Glycol Dehydration Unit D-069

Type of Component	Component Service	Component Counts	Leak Threshold (ppmv)	Leak Fraction	EPA 1995 ALR TOG Factor lb/day*Component	Fugitive Emissions TOG (lb/Day)	VOC (lb/Day)	Methane (lb/Day)
Valves	Gas/Light Liquid	16	2,000	0.0000	7.392E-04	0.012	0.012	0.004
	Light Crude Oil	48	2,000	0.0000	7.392E-04	0.035	0.035	0.013
	Heavy Crude Oil	0	2,000	0.0000	4.118E-04	0.000	0.000	0.000
Pump Seals	Gas/Light Liquid	0	2,000	0.0000	1.214E-02	0.000	0.000	0.000
	Light Crude Oil	0	2,000	0.0000	1.003E-02	0.000	0.000	0.000
	Heavy Crude Oil	0	2,000	0.0000	0.000E+00	0.000	0.000	0.000
Others	Gas/Light Liquid	3	2,000	0.0000	2.376E-03	0.007	0.007	0.003
	Light Crude Oil	3	2,000	0.0000	3.379E-03	0.010	0.010	0.004
	Heavy Crude Oil	0	2,000	0.0000	1.690E-03	0.000	0.000	0.000
Connectors	Gas/Light Liquid	22	2,000	0.0000	4.488E-04	0.010	0.010	0.004
	Light Crude Oil	41	2,000	0.0000	4.541E-04	0.019	0.019	0.007
	Heavy Crude Oil	0	2,000	0.0000	0.000E+00	0.000	0.000	0.000
Flanges	Gas/Light Liquid	24	2,000	0.0000	1.373E-04	0.003	0.003	0.001
	Light Crude Oil	95	2,000	0.0000	8.448E-05	0.008	0.008	0.003
	Heavy Crude Oil	0	2,000	0.0000	0.000E+00	0.000	0.000	0.000
Open-ended Lines	Gas/Light Liquid	0	2,000	0.0000	3.960E-04	0.000	0.000	0.000
	Light Crude Oil	0	2,000	0.0000	3.538E-04	0.000	0.000	0.000
	Heavy Crude Oil	0	2,000	0.0000	3.168E-04	0.000	0.000	0.000
Total Fugitive VOC Emissions From Associated Components (lb/day)						0.104	0.104	0.039

Gas	VOC content (%) of TOG	100.00	Methane content (%) of TOG	37.50
Liquid	VOC content (%) of TOG	100.00	Methane content (%) of TOG	37.50

Fugitive VOC Emissions From Components
Calculated Using EPA ALR Emission Factors

Glycol Dehydration Unit D-070

Type of Component	Component Service	Component Counts	Leak Threshold (ppmv)	Leak Fraction	EPA 1995 ALR TOG Factor lb/day*Component	Fugitive Emissions TOG (lb/Day)	Fugitive Emissions VOC (lb/Day)	Fugitive Emissions Methane (lb/Day)
Valves	Gas/Light Liquid	0	2,000	0.0000	7.392E-04	0.000	0.000	0.000
	Light Crude Oil	39	2,000	0.0000	7.392E-04	0.029	0.029	0.011
	Heavy Crude Oil	0	2,000	0.0000	4.118E-04	0.000	0.000	0.000
Pump Seals	Gas/Light Liquid	0	2,000	0.0000	1.214E-02	0.000	0.000	0.000
	Light Crude Oil	0	2,000	0.0000	1.003E-02	0.000	0.000	0.000
	Heavy Crude Oil	0	2,000	0.0000	0.000E+00	0.000	0.000	0.000
Others	Gas/Light Liquid	0	2,000	0.0000	2.376E-03	0.000	0.000	0.000
	Light Crude Oil	0	2,000	0.0000	3.379E-03	0.000	0.000	0.000
	Heavy Crude Oil	0	2,000	0.0000	1.690E-03	0.000	0.000	0.000
Connectors	Gas/Light Liquid	0	2,000	0.0000	4.488E-04	0.000	0.000	0.000
	Light Crude Oil	18	2,000	0.0000	4.541E-04	0.008	0.008	0.003
	Heavy Crude Oil	0	2,000	0.0000	0.000E+00	0.000	0.000	0.000
Flanges	Gas/Light Liquid	0	2,000	0.0000	1.373E-04	0.000	0.000	0.000
	Light Crude Oil	90	2,000	0.0000	8.448E-05	0.008	0.008	0.003
	Heavy Crude Oil	0	2,000	0.0000	0.000E+00	0.000	0.000	0.000
Open-ended Lines	Gas/Light Liquid	0	2,000	0.0000	3.960E-04	0.000	0.000	0.000
	Light Crude Oil	0	2,000	0.0000	3.538E-04	0.000	0.000	0.000
	Heavy Crude Oil	0	2,000	0.0000	3.168E-04	0.000	0.000	0.000
Total Fugitive VOC Emissions From Associated Components (lb/day)						0.045	0.045	0.017

Gas	VOC content (%) of TOG	100.00	Methane content (%) of TOG	37.50
Liquid	VOC content (%) of TOG	100.00	Methane content (%) of TOG	37.50

Fugitive VOC Emissions From Components
Calculated Using EPA ALR Emission Factors

Glycol Dehydration Unit D-071

Type of Component	Component Service	Component Counts	Leak Threshold (ppmv)	Leak Fraction	EPA 1995 ALR TOG Factor lb/day*Component	Fugitive Emissions TOG (lb/Day)	VOC (lb/Day)	Methane (lb/Day)
Valves	Gas/Light Liquid	8	2,000	0.0000	7.392E-04	0.006	0.006	0.002
	Light Crude Oil	44	2,000	0.0000	7.392E-04	0.033	0.033	0.012
	Heavy Crude Oil	0	2,000	0.0000	4.118E-04	0.000	0.000	0.000
Pump Seals	Gas/Light Liquid	0	2,000	0.0000	1.214E-02	0.000	0.000	0.000
	Light Crude Oil	2	2,000	0.0000	1.003E-02	0.020	0.020	0.008
	Heavy Crude Oil	0	2,000	0.0000	0.000E+00	0.000	0.000	0.000
Others	Gas/Light Liquid	0	2,000	0.0000	2.376E-03	0.000	0.000	0.000
	Light Crude Oil	0	2,000	0.0000	3.379E-03	0.000	0.000	0.000
	Heavy Crude Oil	0	2,000	0.0000	1.690E-03	0.000	0.000	0.000
Connectors	Gas/Light Liquid	17	2,000	0.0000	4.488E-04	0.008	0.008	0.003
	Light Crude Oil	87	2,000	0.0000	4.541E-04	0.040	0.040	0.015
	Heavy Crude Oil	0	2,000	0.0000	0.000E+00	0.000	0.000	0.000
Flanges	Gas/Light Liquid	8	2,000	0.0000	1.373E-04	0.001	0.001	0.000
	Light Crude Oil	35	2,000	0.0000	8.448E-05	0.003	0.003	0.001
	Heavy Crude Oil	0	2,000	0.0000	0.000E+00	0.000	0.000	0.000
Open-ended Lines	Gas/Light Liquid	0	2,000	0.0000	3.960E-04	0.000	0.000	0.000
	Light Crude Oil	0	2,000	0.0000	3.538E-04	0.000	0.000	0.000
	Heavy Crude Oil	0	2,000	0.0000	3.168E-04	0.000	0.000	0.000
Total Fugitive VOC Emissions From Associated Components (lb/day)						0.110	0.110	0.041

Gas	VOC content (%) of TOG	100.00	Methane content (%) of TOG	37.50
Liquid	VOC content (%) of TOG	100.00	Methane content (%) of TOG	37.50

Fugitive VOC Emissions From Components
Calculated Using EPA ALR Emission Factors

Produced Gas ScrubberD-060

Type of Component	Component Service	Component Counts	Leak Threshold (ppmv)	Leak Fraction	EPA 1995 ALR TOG Factor lb/day*Component	Fugitive Emissions TOG (lb/day)	VOC (lb/day)	Methane (lb/day)
Valves	Gas/Light Liquid	54	2,000	0.0000	7.392E-04	0.040	0.040	0.015
	Light Crude Oil	10	2,000	0.0000	7.392E-04	0.007	0.007	0.003
	Heavy Crude Oil	0	2,000	0.0000	4.118E-04	0.000	0.000	0.000
Pump Seals	Gas/Light Liquid	0	2,000	0.0000	1.214E-02	0.000	0.000	0.000
	Light Crude Oil	0	2,000	0.0000	1.003E-02	0.000	0.000	0.000
	Heavy Crude Oil	0	2,000	0.0000	0.000E+00	0.000	0.000	0.000
Others	Gas/Light Liquid	0	2,000	0.0000	2.376E-03	0.000	0.000	0.000
	Light Crude Oil	2	2,000	0.0000	3.379E-03	0.007	0.007	0.003
	Heavy Crude Oil	0	2,000	0.0000	1.690E-03	0.000	0.000	0.000
Connectors	Gas/Light Liquid	58	2,000	0.0000	4.488E-04	0.026	0.026	0.010
	Light Crude Oil	16	2,000	0.0000	4.541E-04	0.007	0.007	0.003
	Heavy Crude Oil	0	2,000	0.0000	0.000E+00	0.000	0.000	0.000
Flanges	Gas/Light Liquid	89	2,000	0.0000	1.373E-04	0.012	0.012	0.005
	Light Crude Oil	26	2,000	0.0000	8.448E-05	0.002	0.002	0.001
	Heavy Crude Oil	0	2,000	0.0000	0.000E+00	0.000	0.000	0.000
Open-ended Lines	Gas/Light Liquid	0	2,000	0.0000	3.960E-04	0.000	0.000	0.000
	Light Crude Oil	0	2,000	0.0000	3.538E-04	0.000	0.000	0.000
	Heavy Crude Oil	0	2,000	0.0000	3.168E-04	0.000	0.000	0.000
Total Fugitive VOC Emissions From Associated Components (lb/day)						0.102	0.102	0.038

Gas	VOC content (%) of TOG	100.00	Methane content (%) of TOG	37.50
Liquid	VOC content (%) of TOG	100.00	Methane content (%) of TOG	37.50

5-382-820

Fugitive VOC Emissions From Components
Calculated Using EPA ALR Emission Factors

K-158 LP Vent Gas Compressor D-164

Type of Component	Component Service	Component Counts	Leak Threshold (ppmv)	Leak Fraction	EPA 1995 ALR TOG Factor lb/day*Component	Fugitive Emissions TOG (lb/Day)	VOC (lb/Day)	Methane (lb/Day)
Valves	Gas/Light Liquid	23	2,000	0.0000	7.392E-04	0.017	0.017	0.006
	Light Crude Oil	6	2,000	0.0000	7.392E-04	0.004	0.004	0.002
	Heavy Crude Oil	0	2,000	0.0000	4.118E-04	0.000	0.000	0.000
Pump Seals	Gas/Light Liquid	0	2,000	0.0000	1.214E-02	0.000	0.000	0.000
	Light Crude Oil	2	2,000	0.0000	1.003E-02	0.020	0.020	0.008
	Heavy Crude Oil	0	2,000	0.0000	0.000E+00	0.000	0.000	0.000
Others	Gas/Light Liquid	2	2,000	0.0000	2.376E-03	0.005	0.005	0.002
	Light Crude Oil	0	2,000	0.0000	3.379E-03	0.000	0.000	0.000
	Heavy Crude Oil	0	2,000	0.0000	1.690E-03	0.000	0.000	0.000
Connectors	Gas/Light Liquid	53	2,000	0.0000	4.488E-04	0.024	0.024	0.009
	Light Crude Oil	17	2,000	0.0000	4.541E-04	0.008	0.008	0.003
	Heavy Crude Oil	0	2,000	0.0000	0.000E+00	0.000	0.000	0.000
Flanges	Gas/Light Liquid	21	2,000	0.0000	1.373E-04	0.003	0.003	0.001
	Light Crude Oil	14	2,000	0.0000	8.448E-05	0.001	0.001	0.000
	Heavy Crude Oil	0	2,000	0.0000	0.000E+00	0.000	0.000	0.000
Open-ended Lines	Gas/Light Liquid	0	2,000	0.0000	3.960E-04	0.000	0.000	0.000
	Light Crude Oil	0	2,000	0.0000	3.538E-04	0.000	0.000	0.000
	Heavy Crude Oil	0	2,000	0.0000	3.168E-04	0.000	0.000	0.000
Total Fugitive VOC Emissions From Associated Components (lb/day)						0.082	0.082	0.031

Gas	VOC content (%) of TOG	100.00	Methane content (%) of TOG	37.50
Liquid	VOC content (%) of TOG	100.00	Methane content (%) of TOG	37.50

Fugitive VOC Emissions From Components
Calculated Using EPA ALR Emission Factors

5-382-821

K-159 LP Vent Gas Compressor D-164

Type of Component	Component Service	Component Counts	Leak Threshold (ppmv)	Leak Fraction	EPA 1995 ALR TOG Factor lb/day*Component	Fugitive Emissions TOG (lb/Day)	VOC (lb/Day)	Methane (lb/Day)
Valves	Gas/Light Liquid	23	2,000	0.0000	7.392E-04	0.017	0.017	0.006
	Light Crude Oil	6	2,000	0.0000	7.392E-04	0.004	0.004	0.002
	Heavy Crude Oil	0	2,000	0.0000	4.118E-04	0.000	0.000	0.000
Pump Seals	Gas/Light Liquid	0	2,000	0.0000	1.214E-02	0.000	0.000	0.000
	Light Crude Oil	2	2,000	0.0000	1.003E-02	0.020	0.020	0.008
	Heavy Crude Oil	0	2,000	0.0000	0.000E+00	0.000	0.000	0.000
Others	Gas/Light Liquid	2	2,000	0.0000	2.376E-03	0.005	0.005	0.002
	Light Crude Oil	0	2,000	0.0000	3.379E-03	0.000	0.000	0.000
	Heavy Crude Oil	0	2,000	0.0000	1.690E-03	0.000	0.000	0.000
Connectors	Gas/Light Liquid	53	2,000	0.0000	4.488E-04	0.024	0.024	0.009
	Light Crude Oil	17	2,000	0.0000	4.541E-04	0.008	0.008	0.003
	Heavy Crude Oil	0	2,000	0.0000	0.000E+00	0.000	0.000	0.000
Flanges	Gas/Light Liquid	21	2,000	0.0000	1.373E-04	0.003	0.003	0.001
	Light Crude Oil	14	2,000	0.0000	8.448E-05	0.001	0.001	0.000
	Heavy Crude Oil	0	2,000	0.0000	0.000E+00	0.000	0.000	0.000
Open-ended Lines	Gas/Light Liquid	0	2,000	0.0000	3.960E-04	0.000	0.000	0.000
	Light Crude Oil	0	2,000	0.0000	3.538E-04	0.000	0.000	0.000
	Heavy Crude Oil	0	2,000	0.0000	3.168E-04	0.000	0.000	0.000
Total Fugitive VOC Emissions From Associated Components (lb/day)						0.082	0.082	0.031

Gas	VOC content (%) of TOG	100.00	Methane content (%) of TOG	37.50
Liquid	VOC content (%) of TOG	100.00	Methane content (%) of TOG	37.50

Fugitive VOC Emissions From Components
Calculated Using EPA ALR Emission Factors

5-382-822

K-160 Off-Gas Booster Compressor 2nd Stage Discharge Cooler D-171

Type of Component	Component Service	Component Counts	Leak Threshold (ppmv)	Leak Fraction	EPA 1995 ALR TOG Factor lb/day*Component	Fugitive Emissions TOG (lb/Day)	Fugitive Emissions VOC (lb/Day)	Fugitive Emissions Methane (lb/Day)
Valves	Gas/Light Liquid	17	2,000	0.0000	7.392E-04	0.013	0.013	0.005
	Light Crude Oil	0	2,000	0.0000	7.392E-04	0.000	0.000	0.000
	Heavy Crude Oil	0	2,000	0.0000	4.118E-04	0.000	0.000	0.000
Pump Seals	Gas/Light Liquid	0	2,000	0.0000	1.214E-02	0.000	0.000	0.000
	Light Crude Oil	0	2,000	0.0000	1.003E-02	0.000	0.000	0.000
	Heavy Crude Oil	0	2,000	0.0000	0.000E+00	0.000	0.000	0.000
Others	Gas/Light Liquid	0	2,000	0.0000	2.376E-03	0.000	0.000	0.000
	Light Crude Oil	0	2,000	0.0000	3.379E-03	0.000	0.000	0.000
	Heavy Crude Oil	0	2,000	0.0000	1.690E-03	0.000	0.000	0.000
Connectors	Gas/Light Liquid	34	2,000	0.0000	4.488E-04	0.015	0.015	0.006
	Light Crude Oil	0	2,000	0.0000	4.541E-04	0.000	0.000	0.000
	Heavy Crude Oil	0	2,000	0.0000	0.000E+00	0.000	0.000	0.000
Flanges	Gas/Light Liquid	12	2,000	0.0000	1.373E-04	0.002	0.002	0.001
	Light Crude Oil	0	2,000	0.0000	8.448E-05	0.000	0.000	0.000
	Heavy Crude Oil	0	2,000	0.0000	0.000E+00	0.000	0.000	0.000
Open-ended Lines	Gas/Light Liquid	0	2,000	0.0000	3.960E-04	0.000	0.000	0.000
	Light Crude Oil	0	2,000	0.0000	3.538E-04	0.000	0.000	0.000
	Heavy Crude Oil	0	2,000	0.0000	3.168E-04	0.000	0.000	0.000
Total Fugitive VOC Emissions From Associated Components (lb/day)						0.029	0.029	0.011

Gas	VOC content (%) of TOG	100.00	Methane content (%) of TOG	37.50
Liquid	VOC content (%) of TOG	100.00	Methane content (%) of TOG	37.50

Fugitive VOC Emissions From Components
Calculated Using EPA ALR Emission Factors

K-160 Off-Gas Booster Compressor 2nd Stage Suction Scrubber D-170

Type of Component	Component Service	Component Counts	Leak Threshold (ppmv)	Leak Fraction	EPA 1995 ALR TOG Factor lb/day*Component	Fugitive Emissions TOG (lb/Day)	VOC (lb/Day)	Methane (lb/Day)
Valves	Gas/Light Liquid	45	2,000	0.0000	7.392E-04	0.033	0.033	0.012
	Light Crude Oil	10	2,000	0.0000	7.392E-04	0.007	0.007	0.003
	Heavy Crude Oil	0	2,000	0.0000	4.118E-04	0.000	0.000	0.000
Pump Seals	Gas/Light Liquid	0	2,000	0.0000	1.214E-02	0.000	0.000	0.000
	Light Crude Oil	0	2,000	0.0000	1.003E-02	0.000	0.000	0.000
	Heavy Crude Oil	0	2,000	0.0000	0.000E+00	0.000	0.000	0.000
Others	Gas/Light Liquid	0	2,000	0.0000	2.376E-03	0.000	0.000	0.000
	Light Crude Oil	2	2,000	0.0000	3.379E-03	0.007	0.007	0.003
	Heavy Crude Oil	0	2,000	0.0000	1.690E-03	0.000	0.000	0.000
Connectors	Gas/Light Liquid	87	2,000	0.0000	4.488E-04	0.039	0.039	0.015
	Light Crude Oil	22	2,000	0.0000	4.541E-04	0.010	0.010	0.004
	Heavy Crude Oil	0	2,000	0.0000	0.000E+00	0.000	0.000	0.000
Flanges	Gas/Light Liquid	33	2,000	0.0000	1.373E-04	0.005	0.005	0.002
	Light Crude Oil	6	2,000	0.0000	8.448E-05	0.001	0.001	0.000
	Heavy Crude Oil	0	2,000	0.0000	0.000E+00	0.000	0.000	0.000
Open-ended Lines	Gas/Light Liquid	0	2,000	0.0000	3.960E-04	0.000	0.000	0.000
	Light Crude Oil	0	2,000	0.0000	3.538E-04	0.000	0.000	0.000
	Heavy Crude Oil	0	2,000	0.0000	3.168E-04	0.000	0.000	0.000
Total Fugitive VOC Emissions From Associated Components (lb/day)						0.101	0.101	0.038

Gas	VOC content (%) of TOG	100.00	Methane content (%) of TOG	37.50
Liquid	VOC content (%) of TOG	100.00	Methane content (%) of TOG	37.50

Fugitive VOC Emissions From Components
Calculated Using EPA ALR Emission Factors

K-160 Off-Gas Booster Compressor D-169

Type of Component	Component Service	Component Counts	Leak Threshold (ppmv)	Leak Fraction	EPA 1995 ALR TOG Factor lb/day*Component	Fugitive Emissions TOG (lb/Day)	VOC (lb/Day)	Methane (lb/Day)
Valves	Gas/Light Liquid	20	2,000	0.0000	7.392E-04	0.015	0.015	0.006
	Light Crude Oil	0	2,000	0.0000	7.392E-04	0.000	0.000	0.000
	Heavy Crude Oil	0	2,000	0.0000	4.118E-04	0.000	0.000	0.000
Pump Seals	Gas/Light Liquid	0	2,000	0.0000	1.214E-02	0.000	0.000	0.000
	Light Crude Oil	0	2,000	0.0000	1.003E-02	0.000	0.000	0.000
	Heavy Crude Oil	0	2,000	0.0000	0.000E+00	0.000	0.000	0.000
Others	Gas/Light Liquid	0	2,000	0.0000	2.376E-03	0.000	0.000	0.000
	Light Crude Oil	0	2,000	0.0000	3.379E-03	0.000	0.000	0.000
	Heavy Crude Oil	0	2,000	0.0000	1.690E-03	0.000	0.000	0.000
Connectors	Gas/Light Liquid	84	2,000	0.0000	4.488E-04	0.038	0.038	0.014
	Light Crude Oil	0	2,000	0.0000	4.541E-04	0.000	0.000	0.000
	Heavy Crude Oil	0	2,000	0.0000	0.000E+00	0.000	0.000	0.000
Flanges	Gas/Light Liquid	34	2,000	0.0000	1.373E-04	0.005	0.005	0.002
	Light Crude Oil	0	2,000	0.0000	8.448E-05	0.000	0.000	0.000
	Heavy Crude Oil	0	2,000	0.0000	0.000E+00	0.000	0.000	0.000
Open-ended Lines	Gas/Light Liquid	0	2,000	0.0000	3.960E-04	0.000	0.000	0.000
	Light Crude Oil	0	2,000	0.0000	3.538E-04	0.000	0.000	0.000
	Heavy Crude Oil	0	2,000	0.0000	3.168E-04	0.000	0.000	0.000
Total Fugitive VOC Emissions From Associated Components (lb/day)						0.057	0.057	0.021

Gas	VOC content (%) of TOG	100.00	Methane content (%) of TOG	37.50
Liquid	VOC content (%) of TOG	100.00	Methane content (%) of TOG	37.50

5-382-823

Fugitive VOC Emissions From Components
Calculated Using EPA ALR Emission Factors

K-161 Off-Gas Booster Compressor D-169

Type of Component	Component Service	Component Counts	Leak Threshold (ppmv)	Leak Fraction	EPA 1995 ALR TOG Factor lb/day*Component	Fugitive Emissions TOG (lb/Day)	VOC (lb/Day)	Methane (lb/Day)
Valves	Gas/Light Liquid	20	2,000	0.0000	7.392E-04	0.015	0.015	0.006
	Light Crude Oil	0	2,000	0.0000	7.392E-04	0.000	0.000	0.000
	Heavy Crude Oil	0	2,000	0.0000	4.118E-04	0.000	0.000	0.000
Pump Seals	Gas/Light Liquid	0	2,000	0.0000	1.214E-02	0.000	0.000	0.000
	Light Crude Oil	0	2,000	0.0000	1.003E-02	0.000	0.000	0.000
	Heavy Crude Oil	0	2,000	0.0000	0.000E+00	0.000	0.000	0.000
Others	Gas/Light Liquid	0	2,000	0.0000	2.376E-03	0.000	0.000	0.000
	Light Crude Oil	0	2,000	0.0000	3.379E-03	0.000	0.000	0.000
	Heavy Crude Oil	0	2,000	0.0000	1.690E-03	0.000	0.000	0.000
Connectors	Gas/Light Liquid	84	2,000	0.0000	4.488E-04	0.038	0.038	0.014
	Light Crude Oil	0	2,000	0.0000	4.541E-04	0.000	0.000	0.000
	Heavy Crude Oil	0	2,000	0.0000	0.000E+00	0.000	0.000	0.000
Flanges	Gas/Light Liquid	34	2,000	0.0000	1.373E-04	0.005	0.005	0.002
	Light Crude Oil	0	2,000	0.0000	8.448E-05	0.000	0.000	0.000
	Heavy Crude Oil	0	2,000	0.0000	0.000E+00	0.000	0.000	0.000
Open-ended Lines	Gas/Light Liquid	0	2,000	0.0000	3.960E-04	0.000	0.000	0.000
	Light Crude Oil	0	2,000	0.0000	3.538E-04	0.000	0.000	0.000
	Heavy Crude Oil	0	2,000	0.0000	3.168E-04	0.000	0.000	0.000
Total Fugitive VOC Emissions From Associated Components (lb/day)						0.057	0.057	0.021

Gas	VOC content (%) of TOG	100.00	Methane content (%) of TOG	37.50
Liquid	VOC content (%) of TOG	100.00	Methane content (%) of TOG	37.50

Fugitive VOC Emissions From Components
Calculated Using EPA ALR Emission Factors

K-161 Off-Gas Booster Compressor 2nd Stage Suction Scrubber D-170

Type of Component	Component Service	Component Counts	Leak Threshold (ppmv)	Leak Fraction	EPA 1995 ALR TOG Factor lb/day*Component	Fugitive Emissions TOG (lb/Day)	VOC (lb/Day)	Methane (lb/Day)
Valves	Gas/Light Liquid	45	2,000	0.0000	7.392E-04	0.033	0.033	0.012
	Light Crude Oil	10	2,000	0.0000	7.392E-04	0.007	0.007	0.003
	Heavy Crude Oil	0	2,000	0.0000	4.118E-04	0.000	0.000	0.000
Pump Seals	Gas/Light Liquid	0	2,000	0.0000	1.214E-02	0.000	0.000	0.000
	Light Crude Oil	0	2,000	0.0000	1.003E-02	0.000	0.000	0.000
	Heavy Crude Oil	0	2,000	0.0000	0.000E+00	0.000	0.000	0.000
Others	Gas/Light Liquid	0	2,000	0.0000	2.376E-03	0.000	0.000	0.000
	Light Crude Oil	2	2,000	0.0000	3.379E-03	0.007	0.007	0.003
	Heavy Crude Oil	0	2,000	0.0000	1.690E-03	0.000	0.000	0.000
Connectors	Gas/Light Liquid	87	2,000	0.0000	4.488E-04	0.039	0.039	0.015
	Light Crude Oil	22	2,000	0.0000	4.541E-04	0.010	0.010	0.004
	Heavy Crude Oil	0	2,000	0.0000	0.000E+00	0.000	0.000	0.000
Flanges	Gas/Light Liquid	33	2,000	0.0000	1.373E-04	0.005	0.005	0.002
	Light Crude Oil	6	2,000	0.0000	8.448E-05	0.001	0.001	0.000
	Heavy Crude Oil	0	2,000	0.0000	0.000E+00	0.000	0.000	0.000
Open-ended Lines	Gas/Light Liquid	0	2,000	0.0000	3.960E-04	0.000	0.000	0.000
	Light Crude Oil	0	2,000	0.0000	3.538E-04	0.000	0.000	0.000
	Heavy Crude Oil	0	2,000	0.0000	3.168E-04	0.000	0.000	0.000
Total Fugitive VOC Emissions From Associated Components (lb/day)						0.101	0.101	0.038

Gas	VOC content (%) of TOG	100.00	Methane content (%) of TOG	37.50
Liquid	VOC content (%) of TOG	100.00	Methane content (%) of TOG	37.50

Fugitive VOC Emissions From Components
Calculated Using EPA ALR Emission Factors

K-161 Off-Gas Booster Compressor 2nd Stage Discharge Cooler D-171

Type of Component	Component Service	Component Counts	Leak Threshold (ppmv)	Leak Fraction	EPA 1995 ALR TOG Factor lb/day*Component	Fugitive Emissions TOG (lb/Day)	VOC (lb/Day)	Methane (lb/Day)
Valves	Gas/Light Liquid	17	2,000	0.0000	7.392E-04	0.013	0.013	0.005
	Light Crude Oil	0	2,000	0.0000	7.392E-04	0.000	0.000	0.000
	Heavy Crude Oil	0	2,000	0.0000	4.118E-04	0.000	0.000	0.000
Pump Seals	Gas/Light Liquid	0	2,000	0.0000	1.214E-02	0.000	0.000	0.000
	Light Crude Oil	0	2,000	0.0000	1.003E-02	0.000	0.000	0.000
	Heavy Crude Oil	0	2,000	0.0000	0.000E+00	0.000	0.000	0.000
Others	Gas/Light Liquid	0	2,000	0.0000	2.376E-03	0.000	0.000	0.000
	Light Crude Oil	0	2,000	0.0000	3.379E-03	0.000	0.000	0.000
	Heavy Crude Oil	0	2,000	0.0000	1.690E-03	0.000	0.000	0.000
Connectors	Gas/Light Liquid	34	2,000	0.0000	4.488E-04	0.015	0.015	0.006
	Light Crude Oil	0	2,000	0.0000	4.541E-04	0.000	0.000	0.000
	Heavy Crude Oil	0	2,000	0.0000	0.000E+00	0.000	0.000	0.000
Flanges	Gas/Light Liquid	12	2,000	0.0000	1.373E-04	0.002	0.002	0.001
	Light Crude Oil	0	2,000	0.0000	8.448E-05	0.000	0.000	0.000
	Heavy Crude Oil	0	2,000	0.0000	0.000E+00	0.000	0.000	0.000
Open-ended Lines	Gas/Light Liquid	0	2,000	0.0000	3.960E-04	0.000	0.000	0.000
	Light Crude Oil	0	2,000	0.0000	3.538E-04	0.000	0.000	0.000
	Heavy Crude Oil	0	2,000	0.0000	3.168E-04	0.000	0.000	0.000
Total Fugitive VOC Emissions From Associated Components (lb/day)						0.029	0.029	0.011

Gas	VOC content (%) of TOG	100.00	Methane content (%) of TOG	37.50
Liquid	VOC content (%) of TOG	100.00	Methane content (%) of TOG	37.50

L

5-382-824

Fugitive VOC Emissions From Components
Calculated Using EPA ALR Emission Factors

K-150 Recycle Compression Suction Scrubber D-0082

Type of Component	Component Service	Component Counts	Leak Threshold (ppmv)	Leak Fraction	EPA 1995 ALR TOG Factor lb/day*Component	Fugitive Emissions TOG (lb/Day)	VOC (lb/Day)	Methane (lb/Day)
Valves	Gas/Light Liquid	32	2,000	0.0000	7.392E-04	0.024	0.024	0.009
	Light Crude Oil	12	2,000	0.0000	7.392E-04	0.009	0.009	0.003
	Heavy Crude Oil	0	2,000	0.0000	4.118E-04	0.000	0.000	0.000
Pump Seals	Gas/Light Liquid	0	2,000	0.0000	1.214E-02	0.000	0.000	0.000
	Light Crude Oil	0	2,000	0.0000	1.003E-02	0.000	0.000	0.000
	Heavy Crude Oil	0	2,000	0.0000	0.000E+00	0.000	0.000	0.000
Others	Gas/Light Liquid	3	2,000	0.0000	2.376E-03	0.007	0.007	0.003
	Light Crude Oil	2	2,000	0.0000	3.379E-03	0.007	0.007	0.003
	Heavy Crude Oil	0	2,000	0.0000	1.690E-03	0.000	0.000	0.000
Connectors	Gas/Light Liquid	54	2,000	0.0000	4.488E-04	0.024	0.024	0.009
	Light Crude Oil	18	2,000	0.0000	4.541E-04	0.008	0.008	0.003
	Heavy Crude Oil	0	2,000	0.0000	0.000E+00	0.000	0.000	0.000
Flanges	Gas/Light Liquid	20	2,000	0.0000	1.373E-04	0.003	0.003	0.001
	Light Crude Oil	12	2,000	0.0000	8.448E-05	0.001	0.001	0.000
	Heavy Crude Oil	0	2,000	0.0000	0.000E+00	0.000	0.000	0.000
Open-ended Lines	Gas/Light Liquid	0	2,000	0.0000	3.960E-04	0.000	0.000	0.000
	Light Crude Oil	0	2,000	0.0000	3.538E-04	0.000	0.000	0.000
	Heavy Crude Oil	0	2,000	0.0000	3.168E-04	0.000	0.000	0.000
Total Fugitive VOC Emissions From Associated Components (lb/day)						0.083	0.083	0.031

Gas	VOC content (%) of TOG	100.00	Methane content (%) of TOG	37.50
Liquid	VOC content (%) of TOG	100.00	Methane content (%) of TOG	37.50

Fugitive VOC Emissions From Components
Calculated Using EPA ALR Emission Factors

K-150 Recycle Compressor D-0083

Type of Component	Component Service	Component Counts	Leak Threshold (ppmv)	Leak Fraction	EPA 1995 ALR TOG Factor lb/day*Component	Fugitive Emissions TOG (lb/Day)	VOC (lb/Day)	Methane (lb/Day)
Valves	Gas/Light Liquid	29	2,000	0.0000	7.392E-04	0.021	0.021	0.008
	Light Crude Oil	0	2,000	0.0000	7.392E-04	0.000	0.000	0.000
	Heavy Crude Oil	0	2,000	0.0000	4.118E-04	0.000	0.000	0.000
Pump Seals	Gas/Light Liquid	0	2,000	0.0000	1.214E-02	0.000	0.000	0.000
	Light Crude Oil	0	2,000	0.0000	1.003E-02	0.000	0.000	0.000
	Heavy Crude Oil	0	2,000	0.0000	0.000E+00	0.000	0.000	0.000
Others	Gas/Light Liquid	0	2,000	0.0000	2.376E-03	0.000	0.000	0.000
	Light Crude Oil	0	2,000	0.0000	3.379E-03	0.000	0.000	0.000
	Heavy Crude Oil	0	2,000	0.0000	1.690E-03	0.000	0.000	0.000
Connectors	Gas/Light Liquid	101	2,000	0.0000	4.488E-04	0.045	0.045	0.017
	Light Crude Oil	0	2,000	0.0000	4.541E-04	0.000	0.000	0.000
	Heavy Crude Oil	0	2,000	0.0000	0.000E+00	0.000	0.000	0.000
Flanges	Gas/Light Liquid	51	2,000	0.0000	1.373E-04	0.007	0.007	0.003
	Light Crude Oil	0	2,000	0.0000	8.448E-05	0.000	0.000	0.000
	Heavy Crude Oil	0	2,000	0.0000	0.000E+00	0.000	0.000	0.000
Open-ended Lines	Gas/Light Liquid	0	2,000	0.0000	3.960E-04	0.000	0.000	0.000
	Light Crude Oil	0	2,000	0.0000	3.538E-04	0.000	0.000	0.000
	Heavy Crude Oil	0	2,000	0.0000	3.168E-04	0.000	0.000	0.000
Total Fugitive VOC Emissions From Associated Components (lb/day)						0.074	0.074	0.028

Gas	VOC content (%) of TOG	100.00	Methane content (%) of TOG	37.50
Liquid	VOC content (%) of TOG	100.00	Methane content (%) of TOG	37.50