Social Services

Scott M. Matheson, Governor, State of Utah
Anthony W. Mitchell, Ph.D., Executive Director

533-6108
June 27, 1978

Phillip E. Lammi
Department of The Air Force
Regional Civil Engineer
Western Region (HQUSAF)
630 Sansome Street
Room 1316
San Francisco, California 94111

Re: Construction Approval Order

Dear Mr. Lammi:

On May 14, 1978 notice of intent to approve the construction of a landing gear overhaul facility at Hill Air Force Base, Utah was published in the Salt Lake Tribune. The thirty-day comment period has expired and no comments were received.

This order authorizes the construction of the plant. Conditions of the order are that the plant will conform to the plans and specifications on file and the pollution control devices be kept in proper operating conditions.

Please notify this office when the plant becomes operational as a final inspection is required.

Sincerely,

Alvin E. Rickers
Executive Secretary
Utah Air Conservation Committee

REB: lr

Division of Health
Environmental Health Services Branch
Lynn M. Thatcher
Deputy Director of Health

150 West North Temple, Suite 426
P.O. Box 2500, Salt Lake City, Utah 84110
801-533-6121

An Equal Opportunity Employer

AIRCRAFT LANDING GEAR OVERHAUL FACILITY
NOTICE OF INTENT TO CONSTRUCT - ADDITIONAL INFORMATION

The information is provided in the same order as requested in Mr. Ricker's letter of 1 March 1978.

1. Fume scrubber and mist eliminator in the chemical cleaning area, also quantity of cleaning fluids used:

a. The fume scrubber system is a water wash, impingement ball type pack 12 inches thick with 1,200 square feet of surface area. Water is sprayed through a pressure nozzle system across the entire face of the scrubber pack at a rate of 1 1/3 gallons per minute per square foot of pack. The tank ventilation discharge air is distributed across the face of the pack. The maximum velocity through the scrubber system shall not exceed 400 FPM. Downstream from the scrubber pack system will be 800 square feet of Z-frame moisture eliminators. This system shall be certified to remove at least 99 percent of the soluble contaminates from the ventilation effluent air stream.

b. The total volume of paint stripping and cleaning agents used in this process is 116,300 gallons.

2. Paint booths with scrubber, also quantity and type of paints and paint thinner:

a. All paint spray operations in building 507 will be accomplished in seven water wash type paint booths. These booths will be four DeVilbiss Model XXW-6848, size 8' X 9' X 10' working area with 14,000 CFM exhaust fans, and three Model XSW, size 10' X 12' X 14' working area and 27,175 CFM fans. Attached is a copy of the manufacturer's specifications for these paint booths. The booth dimensions listed in the attachment do not correspond exactly with those given, because the booths were custom built for previous use in another facility, but the booth operation is the same.

b. The types of paint, thinners and anticipated weekly volumes of sprayed finished are:

(1) Acrylic lacquer, MIL-L-1953-7, 15 gallons

(2) Lacquer primer, MIL-C-8514, 5 gallons

(3) Polyurethane paint, MIL-C-8328-6B, 10 gallons

(4) Epoxy base paint, MIL-C-23377C, 10 gallons

(5) Polyurethane thinner, MIL-T-81772, 12 gallons

(6) Cellulose nitrate thinner, MIL-TT-T2660, 50 gallons

(7) Denatured alcohol, 15 gallons

c. According to EPA publication AP-42 (Compilation of Air Pollutant Emission Factors) water curtains have little or no effect on escaping solvent vapors but are used to stop paint particulate emissions. Water curtain and sprays have paint particulate removal efficiencies of up to 95 percent. Using emission factors provided in AP-42 (assuming paint weighs 12.5 pounds per gallon, and all of the alcohol and thinners are evaporated) the estimated hydrocarbons emitted from the painting operation are:

	Used/Yr (Gal)	Weight Factors	Weight (Lbs)	Percent Emissions	Emissions Year (Lbs)
Lacquer	1040	12.5	13,000	77	10,010
Paint	1040	12.5	13,000	56	7,280
Thinner	3224	8	25,792	100	25,792
Alcohol	780	7	5,460	100	5,460
				Total:	48,542
				=	24.3 Tons

3. Type of emissions from process ovens: There will be five process ovens installed in the landing gear overhaul facility.

a. Three each expansion ovens with thru-belt conveyors to be used to thermally expand aircraft wheels so the bearing cups can be removed. These ovens are electrically heated with a maximum temperature of 400°F. No product or combustion emissions will be generated.

b. One each paint drying oven that is heated by infrared lamps to a maximum temperature of 250°F. Emissions will be small quantities of volatil. paint thinners, which are included in the emissions estimated in part 2c.

c. One each steel bake oven to be used to release entrapped hydrogen in steel aircraft components that was introduced during chemical cleaning. This oven is heated by natural gas firing with an electrically heated backup system and has a capacity of 6 million BTU per hour. The maximum temperature will be 375°F and no product emissions will be generated. The only emission to the atmosphere will be the combustion by-products of the natural gas firing system. The average heating rate of this unit is estimated to be 2 million BTU per hour and the oven will be used 16 hours per day, 5 days a week. Using the heating value of natural gas provided in AP-42 (1050 BTU/cu ft), the furnace will require 152,400 cubic feet per week or 7.924 million cubic feet per year. Using factors provided by Table 1.4-1 of AP-42 (commercial heating) the following emissions are estimated from this oven:

Pollutant	Factor ($LB/10^6 Ft^3$)	Emissions (Lb/Year)
Particulates	10	79.2
Sulfur Oxides	0.6	4.8
Carbon Monoxide	20	158.5
Hydrocarbons	8	63.4
Nitrogen Oxides	120	950.9

4. Baghouse in the mechanical cleaning area along with efficiencies, types and flow rates:

There will be five bag house type dust collectors installed outside the building to support all mechanical (air blast) cleaning of aircraft parts. The parts air blasted are steel and aluminum. The blast media will be 80-180 grit alum oxide or agasite (walnut shell or cracked hard wheat). Three of these units will be 10,000 CFM cloth screen collectors with 2,800 square feet of filtering fabric, one 6,500 CFM unit and one 6,000 CFM unit. One 10,000 CFM unit is a Pangborn CH-3 type and four are American Air Filter Corporation Fabric Pulse machines (size 12-168-2694). Both units have automatic reverse-air cleaning and are designed to comply with current OSHA requirements. According to "Air Pollution Engineering Manual", published by the U. S. Department of Health, Education and Welfare (Public Health Service, Cincinnati, Ohio, 1967), baghouses are the most widely used type of collector for blasting operations and "the positive collection mechanism of the baghouse ensures virtually 100 percent collection efficiency for an adequately sized unit in good condition."

5. Melt furnaces, type of firing and control:

a. There will be four melt furnaces installed in the foundry area. Two of these furnaces are 1,000 pound capacity tilt type units and will be used to pour lead and Kirksite (lead zinc copper alloy) drop hammer dies, with a maximum temperature of 1,000°F. Two furnaces of 250 pound capacity will be used for aluminum and brass casting. The furnaces are used to melt virgin materials (no contaminants) and fit into the category of "crucibles or pots" as defined by AP-42.

b. There are no cleaning devices planned for the emissions from these furnaces. However, as indicated in our earlier submittal, the fumes from these furnaces are exhausted through a 30 foot stack which will allow some particulates to drop out. Using emission factors from AP-42 and assuming no removal in the stack, the estimated particulate emissions from the metal melting is:

	Yearly Melt (Tons)	Emission Factor (Lb/Tons)	Particulate Emissic (Lbs/Year)
Lead	19.5	0.8	15.6
Kirksite	24.0	12.0*	288.0
Aluminum	1.9	1.9	3.6
Brass	0.25	12.0*	3.0
		Total:	310.2

*AP-42 gives no factors for Kitksite so the factor for brass was utilized (both are zinc copper alloys).

c. The four melt furnaces are all fired by natural gas and forced air draft. The two 1,000 pound capacity units have maximum ratings of 2.5 million BTU per hour to melt 3,000 pounds per hour. No rating could be found on the 250 pound capacity units, but it is assumed they are similar (i.e. 0.63 million BTU per hour to melt 750 pounds per hour). Using these maximum capacity rates, the yearly natural gas consumption to melt the identified quantities is estimated as follows:

	Yearly Melt (Tons)	BTU Req'd (10^6)	Nat Gas (Cu Ft)
Lead	19.5	32.5	30,480
Kirksite	24.0	40.0	38,100
Aluminum	1.9	3.2	3,050
Brass	0.25	0.42	400
		Total:	72,030

The pollutants from this natural gas combustion are then calculated at:

Pollutant	Factor (Lb/10^6 Cu Ft)	Emissions (Lb/Year)
Particulates	10	0.7
Sulfur Oxides	0.6	—
Carbon Monoxide	20	1.4
Hydrocarbons	8	0.6
Nitrogen Oxides	120	8.6

1 Atch
Paint Booth Specifications

DEVILBISS

water wash spray booths

for all production spraying requirements (the most widely used and most versatile type of booth) to trap paint particles in water

- **offers maximum capacity for cleaning exhaust air**
- **full compliance with safety and insurance codes**
- **wide range of sizes and capacities**
- **special features available for specific jobs**

Powerful scrubbing action with a deluge of water—as only a multiple-nozzle-type spray produces—removes paint particles from the exhaust air. The design of the swirl-type nozzles and their spacing provide a thick, dense curtain of coarse drops that trap paint and carry it into the tank for easy removal. Baffles between the washing area and the fan are so positioned as to throw out and catch any free water before it reaches the stack. When the air reaches the exhaust system, it is free of paint and water particles. This simple principle of operation is highly efficient and easily maintained; it has been proved in thousands of installations.

Water wash booths with either the elevated or low level chamber are available in a variety of capacities to efficiently remove the air-borne paint particles resulting from spraying operations.

Elevated chambers are preferred whenever sufficient building ceiling height is available. Low type chambers are employed where building ceiling heights restrict the use of the elevated type.

Standard duty chambers provide sufficient washing capacity for applications involving a moderate amount of painting, such as maintenance painting, or moderate speed conveyorized jobs.

Heavy duty chambers provide extra air washing capability for high production applications involving high painting rates.

Two standard air velocities of 125 and 150 FPM are offered to meet industry and code standards. Generally 125 FPM meets most requirements and 150 FPM is available for heavy duty application and where preferred or specified by industry and codes.

DeVilbiss water wash spray booths have outstanding design and construction features that are responsible for their high paint-trapping efficiency, their ease of installation, operation and cleaning.

4.2.4-1048

elevated and low type chambers

ceiling height required: 14 feet, or more

- air washed twice—passing through sheet of water from spill baffle—scrubbed and agitated in dense, overlapping spray from nozzles.
- simple piping—single, large-diameter header pipe with flush-out line.
- water flow 21, 42 and 56 gallons per minute per foot of booth width.
- entire volume of water on wash-down sheet.
- wash-down sheet extends into water — accumulated paint and scum stays in front for easy removal.
- very low resistance to flow of air.
- convenient inspection and clean-out doors.

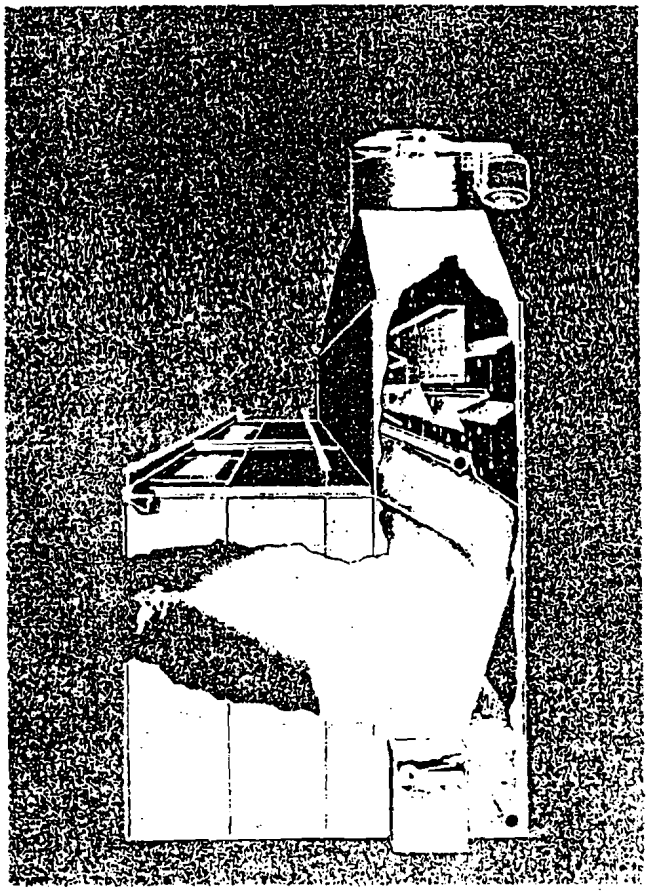

elevated type

ceiling height required: 10 feet, 6 inches

- air washed twice — passing through curtain of water from wash-down sheet — scrubbed and agitated in dense, overlapping spray from the closely spaced nozzles.
- simple piping—single, large-diameter header pipe with flush-out line—separate line with adjustment to supply correct amount of water to wash-down sheet.
- water flow on wash-down sheet ample to catch paint, keep surface clean and provide first stage washing.
- water flow 21, 42 and 56 gallons per minute per foot of booth width, plus 5 gallons per minute per foot for wash-down sheet.
- ample clearance over entire tank for removing scum from front of chamber.
- convenient inspection and clean-out doors.

low type

4.2.4-1049

DEVILBISS water wash spray booths

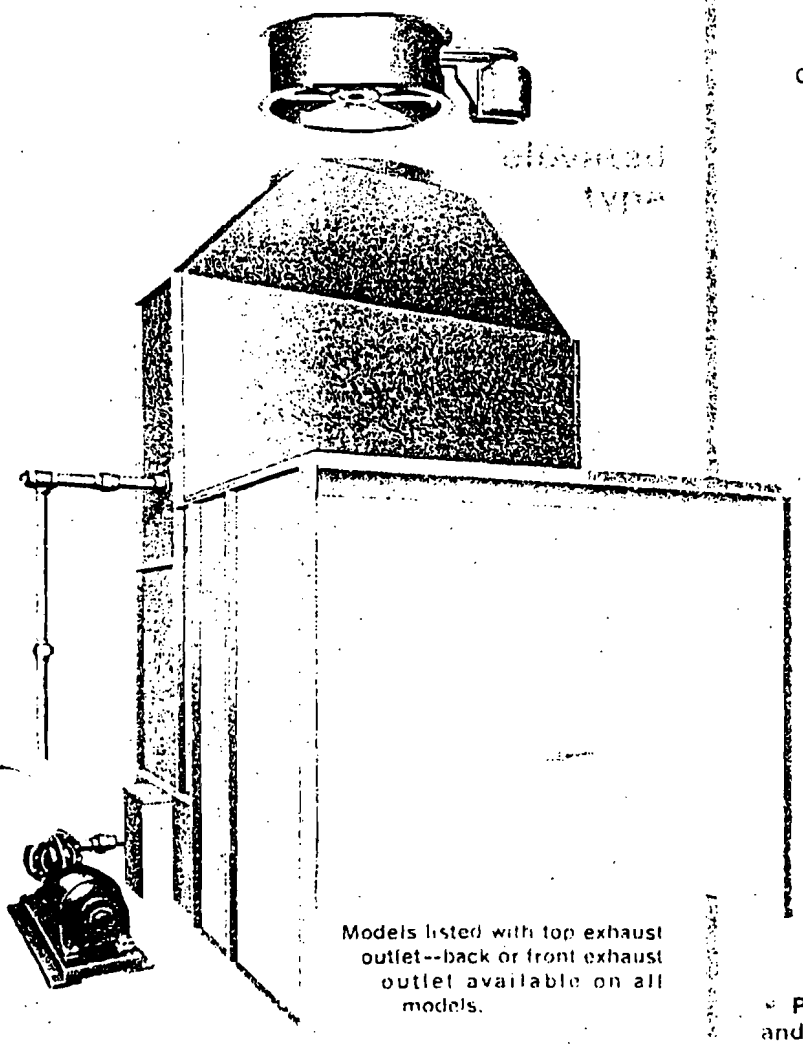

Models listed with top exhaust outlet--back or front exhaust outlet available on all models.

ceiling height required: 14 feet, or more

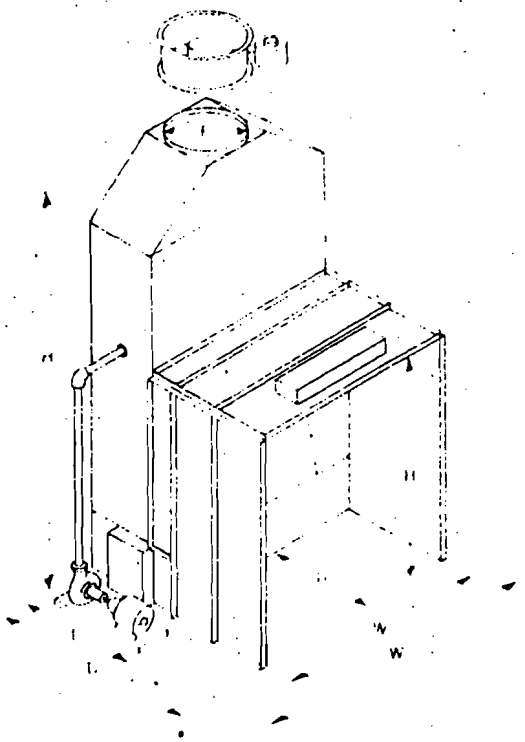

Complete spray booth features

• **Lights**—4 tube, panel type, rapid-start fluorescent fixtures provide broad source illumination for maximum reduction fo shadows in work area. Sealed type fluorescent and incandescent also available.

• **Exhaust Fan**—Correct size and capacity to produce required air velocity for booths with or without conveyor openings. Open type motor is standard; explosion-proof or totally enclosed available.

• **Fan Rings**—Provide reinforced flange type mounting to exhaust stack.

• **Pump**—Capacity to furnish all water required at most efficient operating pressure; with standard open type motor; explosion-proof and totally enclosed available. rnished with sturdy sheet metal safety guard over ıting coupler shaft.

• **Piping**—All piping (except water supply line to booth and drain line to sewer) is included as standard equipment.

• **Hardware**—All nuts, bolts, fittings, seals, caulking, floor clips and tie angles furnished.

exhaust chambers

Ideal for special enclosures constructed from standard panels, beams, etc. (see pages 36 and 37)—or for installation in a "spray finishing room." Consists of the complete exhaust chamber section (without the painting area enclosure), water piping and pump with open type motor. Order exhaust fan and motor separately.

optional feature

extension tank: water tank extended out into or beneath working area so work hangs over surface of water.

important: Specify electric current from which both fan and pump motors are to operate. Order required exhaust stack (pages 40 and 41).

4.2.4-1050

Form 1 2001

elevated type chamber

125 feet per minute air velocity
without conveyor openings

WATER WASH SPRAY BOOTHS

WORKING COMPARTMENT DIMENSIONS			BOOTH OVER ALL DIMENSIONS				No. of Lights	STANDARD WASH				HEAVY WASH				Fan	
W	H	D	W'	H'	D'	E		Booths with Lights and Fan	Booths with Fan Without Light Openings or Fixtures	Exhaust Chamber Only Without Fan	Pump H.P.	Booths with Lights and Fan	Booths with Fan Without Light Openings or Fixtures	Exhaust Chamber Only—Without Fan	Pump H.P.	Dia.	H.P.
4'	7'	6'	6'-11"	13'-6"	10'-0"	4'-3"		--	XSW-6001	XNE-5184	2		XHW-6001	XNE-544	3	24	1
6'	7'	6'	9'-1"	13'-6"	10'-0"	4'-7"	1	XSW-6002	XSW-6003	XNE-5186	3	XHW-6002	XHW-6003	XNE-546	5	24	1½
6'	7'	9'	9'-1"	13'-6"	13'-0"	4'-7"	1	XSW-6004	XSW-6005	XNE-5186	3	XHW-6004	XHW-6005	XNE-546	5	24	1½
6'	8'	6'	9'-1"	14'-6"	10'-0"	4'-7"	1	XSW-6006	XSW-6007	XNE-5293	3	XHW-6006	XHW-6007	XNE-545	5	24	2
6'	8'	9'	9'-1"	14'-6"	13'-0"	4'-7"	1	XSW-6008	XSW-6009	XNE-5293	3	XHW-6008	XHW-6009	XNE-545	5	24	2
8'	7'	6'	11'-1"	13'-6"	10'-0"	4'-7"	1	XSW-6010	XSW-6011	XNE-5188	3	XHW-6010	XHW-6011	XNE-548	5	24	2
8'	7'	9'	11'-1"	13'-6"	13'-0"	4'-7"	1	XSW-6012	XSW-6013	XNE-5188	3	XHW-6012	XHW-6013	XNE-548	5	24	2
8'	8'	6'	11'-1"	14'-6"	10'-0"	4'-7"	1	XSW-6014	XSW-6015	XNE-5228	3	XHW-6014	XHW-6015	XNE-568	5	34	2
8'	8'	9'	11'-1"	14'-6"	13'-0"	4'-7"	1	XSW-6016	XSW-6017	XNE-5228	3	XHW-6016	XHW-6017	XNE-568	5	34	2
10'	7'	6'	13'-2"	13'-6"	10'-0"	5'-2"	2	XSW-6020	XSW-6021	XNE-5190	5	XHW-6020	XHW-6021	XNE-550	7½	34	1½
10'	7'	9'	13'-2"	13'-6"	13'-0"	5'-2"	2	XSW-6022	XSW-6023	XNE-5190	5	XHW-6022	XHW-6023	XNE-550	7½	34	1½
10'	8'	6'	13'-2"	14'-6"	10'-0"	5'-2"	2	XSW-6024	XSW-6025	XNE-5230	5	XHW-6024	XHW-6025	XNE-570	7½	34	3
10'	8'	9'	13'-2"	14'-6"	13'-0"	5'-2"	2	XSW-6026	XSW-6027	XNE-5230	5	XHW-6026	XHW-6027	XNE-570	7½	34	3
10'	8'	12'	13'-2"	14'-6"	16'-0"	5'-2"	4	XSW-6028	-	XNE-5230	5	XHW-6028	-	XNE-570	7½	34	3
10'	10'	9'	13'-2"	16'-6"	13'-0"	5'-2"	2	XSW-6034	XSW-6035	XNE-5259	5	XHW-6034	XHW-6035	XNE-593	7½	47	5
10'	10'	12'	13'-2"	16'-6"	16'-0"	5'-2"	4	XSW-6036	--	XNE-5259	5	XHW-6036	-	XNE-593	7½	42	5
12'	7'	6'	15'-3"	14'-6"	10'-0"	5'-2"	2	XSW-6038	XSW-6039	XNE-5192	5	XHW-6038	XHW-6039	XNE-552	10	34	2
12'	7'	9'	15'-3"	14'-6"	13'-0"	5'-2"	2	XSW-6040	XSW-6041	XNE-5192	5	XHW-6040	XHW-6041	XNE-552	10	34	2
12'	8'	6'	15'-3"	15'-6"	10'-0"	5'-2"	2	XSW-6042	XSW-6043	XNE-5232	5	XHW-6042	XHW-6043	XNE-572	10	34	3
12'	8'	9'	15'-3"	15'-6"	13'-0"	5'-2"	2	XSW-6044	XSW-6045	XNE-5232	5	XHW-6044	XHW-6045	XNE-572	10	34	3
12'	8'	12'	15'-3"	15'-6"	16'-0"	5'-2"	4	XSW-6046	--	XNE-5232	5	XHW-6046	-	XNE-572	10	34	3
12'	8'	15'	15'-3"	15'-6"	19'-0"	5'-2"	4	XSW-6048	--	XNE-5232	5	XHW-6048	-	XNE-572	10	34	3
12'	10'	9'	15'-3"	17'-6"	13'-0"	5'-2"	2	XSW-6056	XSW-6057	XNE-5233	5	XHW-6056	XHW-6057	XNE-595	10	42	5
12'	10'	12'	15'-3"	17'-6"	16'-0"	5'-2"	4	XSW-6058		XNE-5233	5	XHW-6058		XNE-595	10	42	5
12'	10'	15'	15'-3"	17'-6"	19'-0"	5'-2"	4	XSW-6060	--	XNE-5233	5	XHW-6060		XNE-595	10	42	5
14'	7'	6'	17'-3"	14'-6"	10'-0"	5'-2"	2	XSW-6062	XSW-6063	XNE-5194	5	XHW-6062	XHW-6063	XNE-554	10	34	3
14'	7'	9'	17'-3"	14'-6"	13'-0"	5'-2"	2	XSW-6064	XSW-6065	XNE-5194	5	XHW-6064	XHW-6065	XNE-554	10	34	3
14'	8'	6'	17'-3"	15'-6"	10'-0"	5'-2"	2	XSW-6066	XSW-6067	XNE-5234	5	XHW-6066	XHW-6067	XNE-574	10	42	
14'	8'	9'	17'-3"	15'-6"	13'-6"	5'-2"	2	XSW-6068	XSW-6069	XNE-5234	5	XHW-6068	XHW-6069	XNE-574	10	42	
14'	8'	12'	17'-3"	15'-6"	16'-0"	5'-2"	4	XSW-6070	-	XNE-5234	5	XHW-6070		XNE-574	10	47	
14'	8'	15'	17'-3"	15'-6"	19'-0"	5'-2"	4	XSW-6072		XNE-5234	5	XHW-6072		XNE-574	10	42	5
14'	10'	9'	17'-3"	17'-6"	13'-0"	5'-2"	2	XSW-6080	XSW-6081	XNE-5243	5	XHW-6080	XHW-6081	XNE-547	10	42	5
14'	10'	12'	17'-3"	17'-6"	16'-0"	5'-2"	4	XSW-6082	-	XNE-5243	5	XHW-6082	-	XNE-547	10	42	5
14'	10'	15'	17'-3"	17'-6"	19'-0"	5'-2"	4	XSW-6084	--	XNE-5243	5	XHW-6084		XNE-547	10	42	5
16'	7'	6'	19'-6"	14'-6"	10'-0"	5'-8"	2	XSW-6086	XSW-6087	XNE-5196	7½	XHW-6086	XHW-6087	XNE-556	10	42	3
16'	7'	9'	19'-6"	14'-6"	13'-0"	5'-8"	2	XSW-6088	XSW-6089	XNE-5196	7½	XHW-6088	XHW-6089	XNE-556	10	42	3
16'	8'	6'	19'-6"	15'-6"	10'-0"	5'-8"	2	XSW-6090	XSW-6091	XNE-5295	7½	XHW-6090	XHW-6091	XNE-565	10	42	5
16'	8'	9'	19'-6"	15'-6"	13'-0"	5'-8"	2	XSW-6092	XSW-6093	XNE-5295	7½	XHW-6092	XHW-6093	XNE-565	10	42	5
16'	8'	12'	19'-6"	15'-6"	16'-0"	5'-8"	4	XSW-6094	--	XNE-5295	7½	XHW-6094		XNE-565	10	42	5
16'	8'	15'	19'-6"	15'-6"	19'-0"	5'-8"	4	XSW-6096		XNE-5295	7½	XHW-6096	--	XNE-565	10	42	5
16'	10'	9'	19'-6"	17'-6"	13'-0"	5'-8"	2	XSW-6104	XSW-6105	XNE-5298	7½	XHW-6104	XHW-6105	XNE-567	15	48	7½
16'	10'	12'	19'-6"	17'-6"	16'-0"	5'-8"	4	XSW-6106	--	XNE-5298	7½	XHW-6106	--	XNE-567	15	48	7½
16'	10'	15'	19'-6"	17'-6"	19'-0"	5'-8"	4	XSW-6108	--	XNE-5298	7½	XHW-6108		XNE-567	15	48	7½
18'	7'	6'	21'-6"	14'-6"	10'-0"	5'-8"	3	XSW-6110	XSW-6111	XNE-5271	7½	XHW-6110	XHW-6111	XNE-573	10	42	3
18'	7'	9'	21'-6"	14'-6"	13'-0"	5'-8"	3	XSW-6112	XSW-6113	XNE-5271	7½	XHW-6112	XHW-6113	XNE-573	10	42	3
18'	8'	6'	21'-6"	15'-6"	10'-0"	5'-8"	3	XSW-6114	XSW-6115	XNE-5273	7½	XHW-6114	XHW-6115	XNE-577	10	42	5
18'	8'	9'	21'-6"	15'-6"	13'-0"	5'-8"	3	XSW-6116	XSW-6117	XNE-5273	7½	XHW-6116	XHW-6117	XNE-577	10	42	5
18'	8'	12'	21'-6"	15'-6"	16'-0"	5'-8"	6	XSW-6118	-	XNE-5273	7½	XHW-6118	--	XNE-577	10	42	5
18'	8'	15'	21'-6"	15'-6"	19'-0"	5'-8"	6	XSW-6120	--	XNE-5273	7½	XHW-6120	--	XNE-577	10	42	5
18'	10'	9'	21'-6"	17'-6"	13'-0"	5'-8"	3	XSW-6128	XSW-6129	XNE-5276	7½	XHW-6128	XHW-6129	XNE-525	15	48	7½
18'	10'	12'	21'-6"	17'-6"	16'-0"	5'-8"	6	XSW-6130	--	XNE-5276	7½	XHW-6130	--	XNE-525	15	48	7½
18'	10'	15'	21'-6"	17'-6"	19'-0"	5'-8"	6	XSW-6132	--	XNE-5276	7½	XHW-6132	-	XNE-525	15	48	7½
20'	7'	6'	23'-6"	14'-6"	10'-0"	5'-8"	4	XSW-6134	XSW-6135	XNE-5200	7½	XHW-6134	XHW-6135	XNE-560	15	42	5
20'	7'	9'	23'-6"	14'-6"	13'-0"	5'-8"	4	XSW-6136	XSW-6137	XNE-5200	7½	XHW-6136	XHW-6137	XNE-560	15	42	5
20'	8'	6'	23'-6"	15'-6"	10'-0"	5'-8"	4	XSW-6138	XSW-6139	XNE-5300	7½	XHW-6138	XHW-6139	XNE-587	15	42	5
20'	8'	9'	23'-6"	15'-6"	13'-0"	5'-8"	4	XSW-6140	XSW-6141	XNE-5300	7½	XHW-6140	XHW-6141	XNE-507	15	42	5
20'	8'	12'	23'-6"	15'-6"	16'-0"	5'-8"	8	XSW-6142	--	XNE-5300	7½	XHW-6142		XNE-507	15	42	5
20'	8'	15'	23'-6"	15'-6"	19'-0"	5'-8"	8	XSW-6144	--	XNE-5300	7½	XHW-6144		XNE-507	15	47	5
20'	10'	9'	23'-6"	17'-6"	13'-0"	5'-8"	4	XSW-6152	XSW-6153	XNE-5301	7½	XHW-6152	XHW-6153	XNE-535	15	48	7½
20'	10'	12'	23'-6"	17'-6"	16'-0"	5'-8"	8	XSW-6154		XNE-5301	7½	XHW-6154		XNE-535	15	48	7½
20'	10'	15'	23'-6"	17'-6"	19'-0"	5'-8"	8	XSW-6156		XNE-5301	7½	XHW-6156		XNE-535	15	48	7½

NOTE: Refer to Dimensions on Page 10

DEVILBISS water wash spray booths

ceiling height required: 10 feet, 6 inches

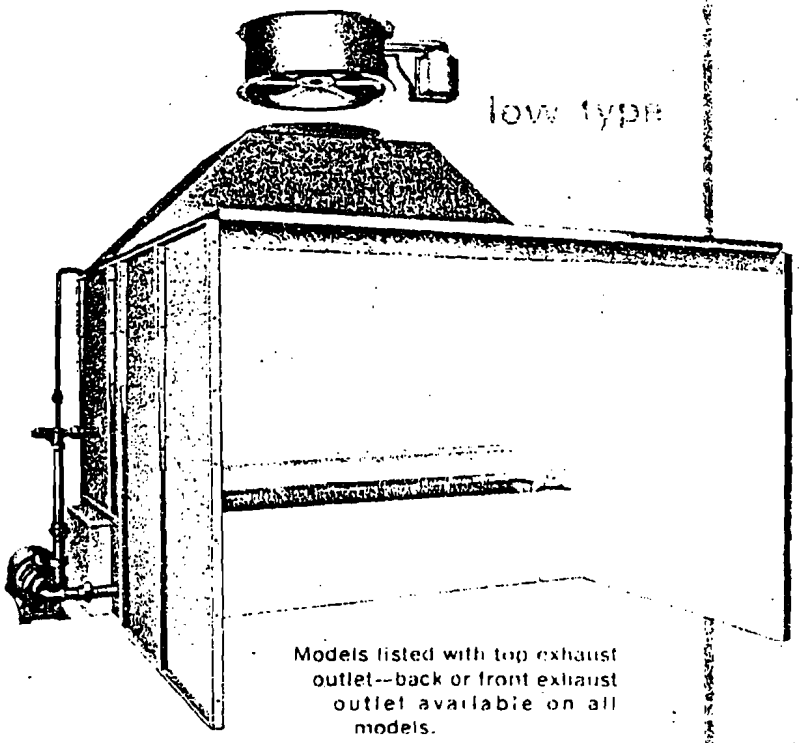

Models listed with top exhaust outlet--back or front exhaust outlet available on all models.

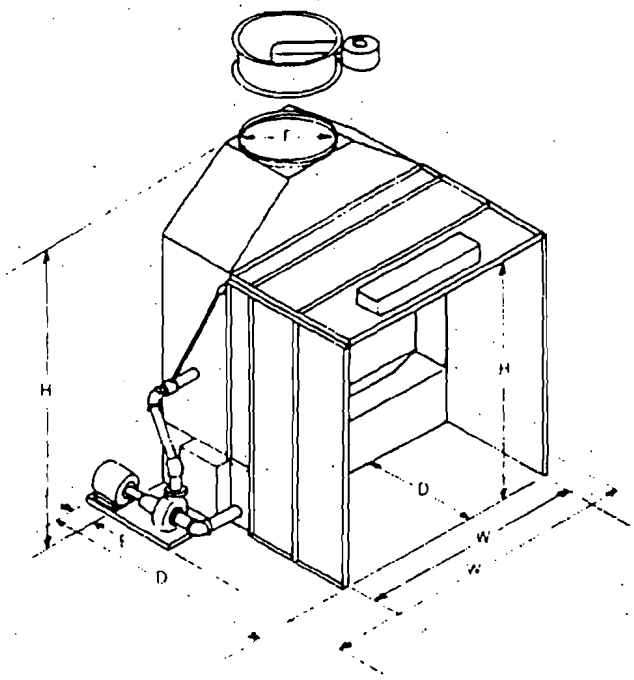

Complete spray booth features

- **Lights**—4 tube, panel type, rapid-start fluorescent fixtures provide broad source illumination for maximum reduction fo shadows in work area. Sealed type fluorescent and incandescent also available.
- **Exhaust Fan**—Correct size and capacity to produce required air velocity for booths with or without conveyor openings. Open type motor is standard; explosion-proof or totally enclosed available.
- **Fan Rings**—Provide reinforced flange type mounting to exhaust stack.
- **Pump**—Capacity to furnish all water required at most efficient operating pressure; with standard open type motor; explosion-proof and totally enclosed available. Furnished with sturdy sheet metal safety guard over rotating coupler shaft.
- **Piping**—All piping (except water supply line to booth and drain line to sewer) is included as standard equipment.
- **Hardware**—All nuts, bolts, fittings, seals, caulking, floor clips and tie angles furnished.

exhaust chambers

Ideal for special enclosures constructed from standard panels, beams, etc. (see pages 36 and 37)—or for installation in a "spray finishing room." Consists of the complete exhaust chamber section (without the painting area enclosure), water piping and pump with open type motor. Order exhaust fan and motor separately.

optional feature

extension tank: water tank extended out into or beneath working area so work hangs over surface of water.

important: Specify electric current from which both fan and pump motors are to operate. Order required exhaust stack (pages 40 and 41).

4.2.4-1052

low-type chamber

150 feet per minute air velocity
with conveyor openings
up to 20% of frontal area

WATER WASH SPRAY BOOTHS

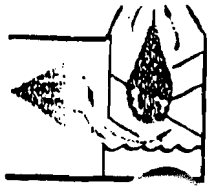

WORKING COMPARTMENT DIMENSIONS			BOOTH OVER-ALL DIMENSIONS					STANDARD WASH				HEAVY WASH				F.	
W	H	D	W'	H'	D'	E	No. of Lights	Booths with Lights and Fan	Booths with Fan—Without Light Openings or Fixtures	Exhaust Chamber Only—Without Fan	Pump H.P.	Booths with Lights and Fan	Booths with Fan Without Light Openings or Fixtures	Exhaust Chamber Only—Without Fan	Pump H.P.	Dia.	H.P.
4'	7'	6'	—	—	—	—	—	—	—	—		—	—	—		—	—
6'	7'	6'	9'-1"	9'-6"	10'-7"	7"	1	XSW-6832	XSW-6833	XNE-5146	3	XHW-6832	XHW-6833	XNE-526	5	34"	5
6'	7'	9'	9'-1"	9'-6"	13'-7"	7"	1	XSW-6834	XSW-6835	XNE-5146	3	XHW-6834	XHW-6835	XNE-526	5	34"	5
6'	8'	6'	9'-1"	10'-6"	11'-6"	5"	1	—	—	—		XXW-6800	XXW-6801	XNE-50402	5	34"	2
6'	8'	9'	9'-1"	10'-6"	14'-6"	5"	1	—	—	—		XXW-6802	XXW-6803	XNE-50402	5	34"	2
8'	7'	6'	11'-1"	9'-6"	10'-7"	7"	1	XSW-6836	XSW-6837	XNE-5178	3	XHW-6836	XHW-6837	XNE-538	5	42"	5
8'	7'	9'	11'-1"	9'-6"	13'-7"	7"	1	XSW-6838	XSW-6839	XNE-5178	3	XHW-6838	XHW-6839	XNE-538	5	42"	5
8'	8'	6'	11'-1"	10'-6"	12'-1"	12"	1	—	—	—		XXW-6804	XXW-6805	XNE-50404	7½	34"	5
8'	8'	9'	11'-1"	10'-6"	15'-1"	12"	1	—	—	—		XXW-6806	XXW-6807	XNE-50404	7½	34"	5
10'	7'	6'	13'-2"	9'-6"	11'-2"	14"	2	XSW-6842	XSW-6843	XNE-5180	5	XHW-6842	XHW-6843	XNE-540	7½	42"	7½
10'	7'	9'	13'-2"	9'-6"	14'-2"	14"	2	XSW-6844	XSW-6845	XNE-5180	5	XHW-6844	XHW-6845	XNE-540	7½	42"	7½
10'	8'	6'	13'-2"	10'-6"	12'-0"	17"	2	—	—	—		XXW-6808	XXW-6809	XNE-50409	10	42"	5
10'	8'	9'	13'-2"	10'-6"	15'-0"	17"	2	—	—	—		XXW-6810	XXW-6811	XNE-50409	10	42"	5
10'	8'	12'	13'-2"	10'-6"	18'-0"	17"	4	—	—	—		XXW-6812	—	XNE-50409	10	42"	5
10'	10'	9'	13'-2"	12'-6"	15'-0"	17"	2	—	—	—		XXW-6816	XXW-6817	XNE-50410	10	42"	7½
10'	10'	12'	13'-2"	12'-6"	18'-0"	17"	4	—	—	—		XXW-6818	—	XNE-50410	10	42"	7½
12'	7'	6'	15'-3"	10'-6"	11'-2"	14"	2	XSW-6848	XSW-6849	XNE-5142	5	XHW-6848	XHW-6849	XNE-522	10	48"	7½
12'	7'	9'	15'-3"	10'-6"	14'-2"	14"	2	XSW-6850	XSW-6851	XNE-5142	5	XHW-6850	XHW-6851	XNE-522	10	48"	7½
12'	8'	6'	15'-3"	11'-6"	12'-5"	17"	2	—	—	—		XXW-6820	XXW-6821	XNE-50422	10	42"	5
12'	8'	9'	15'-3"	11'-6"	15'-5"	17"	2					XXW-6822	XXW-6823	XNE-50422	10	42"	5
12'	8'	9'	15'-3"	11'-6"	15'-5"	17"	2					XXW-6000*	XXW-6001*	XNE-50422	10	42"	5
12'	8'	12'	15'-3"	11'-6"	18'-5"	17"	4	—	—	—		XXW-6824	—	XNE-50422	10	42"	5
12'	8'	15'	15'-3"	11'-6"	21'-5"	17"	4	—	—	—		XXW-6826	—	XNE-50422	10	42"	5
12'	10'	9'	15'-3"	13'-6"	15'-5"	17"	2	—	—	—		XXW-6830	XXW-6831	XNE-50414	10	48"	7½
12'	10'	9'	15'-3"	13'-6"	15'-5"	17"	2	—	—	—		XXW-6902*	XXW-6903*	XNE-50414	10	48"	7½
12'	10'	12'	15'-3"	13'-6"	18'-5"	17"	4	—	—	—		XXW-6832	—	XNE-50414	10	48"	7½
12'	10'	15'	15'-3"	13'-6"	21'-5"	17"	4	—	—	—		XXW-6834	—	XNE-50414	10	48"	7½
14'	7'	6'	17'-3"	10'-6"	11'-2"	14"	2	XSW-6854	XSW-6855	XNE-5225	5	XHW-6854	XHW-6855	XNE-564	10	48"	7½
14'	7'	9'	17'-3"	10'-6"	14'-2"	14"	2	XSW-6856	XSW-6857	XNE-5225	5	XHW-6856	XHW-6857	XNE-564	10	48"	
14'	8'	6'	17'-3"	11'-6"	12'-5"	17"	2	—	—	—		XXW-6836	XXW-6837	XNE-50423	15	42"	
14'	8'	9'	17'-3"	11'-6"	15'-5"	17"	2	—	—	—		XXW-6838	XXW-6839	XNE-50423	15	42"	
14'	8'	12'	17'-3"	11'-6"	18'-5"	17"	4	—	—	—		XXW-6840	—	XNE-50423	15	42"	7½
14'	8'	15'	17'-3"	11'-6"	21'-5"	17"	4	—	—	—		XXW-6842	—	XNE-50423	15	42"	7½
14'	10'	9'	17'-3"	13'-6"	15'-5"	17"	2	—	—	—		XXW-6846	XXW-6847	XNE-50415	15	48"	7½
14'	10'	12'	17'-3"	13'-6"	18'-5"	17"	4	—	—	—		XXW-6848	—	XNE-50415	15	48"	7½
14'	10'	15'	17'-3"	13'-6"	21'-5"	17"	4	—	—	—		XXW-6850	—	XNE-50415	15	48"	7½
16'	7'	6'	19'-6"	10'-6"	11'-9"	21"	2	XSW-6860	XSW-6861	XNE-5176	7½	XHW-6860	XHW-6861	XNE-536	10	48"	10
16'	7'	9'	19'-6"	10'-6"	14'-9"	21"	2	XSW-6862	XSW-6863	XNE-5176	7½	XHW-6862	XHW-6863	XNE-536	10	48"	10
16'	8'	6'	19'-6"	11'-6"	12'-5"	17"	2	—	—	—		XXW-6852	XXW-6853	XNE-50424	15	48"	7½
16'	8'	9'	19'-6"	11'-6"	15'-5"	17"	2	—	—	—		XXW-6854	XXW-6855	XNE-50424	15	48"	7½
16'	8'	9'	19'-6"	11'-6"	15'-5"	17"	2	—	—	—		XXW-6904*	XXW-6906*	XNE-50424	15	48"	7½
16'	8'	12'	19'-6"	11'-6"	18'-5"	17"	4	—	—	—		XXW-6856	—	XNE-50424	15	48"	7½
16'	8'	15'	19'-6"	11'-6"	21'-5"	17"	4	—	—	—		XXW-6858	—	XNE-50424	15	48"	7½
16'	10'	9'	19'-6"	13'-6"	15'-5"	17"	2	—	—	—		XXW-6862	XXW-6863	XNE-50416	15	48"	10
16'	10'	9'	19'-6"	13'-6"	15'-5"	17"	2	—	—	—		XXW-6906*	XXW-6907*	XNE-50416	15	48"	10
16'	10'	12'	19'-6"	13'-6"	18'-5"	17"	4	—	—	—		XXW-6864	—	XNE-50416	15	48"	10
16'	10'	15'	19'-6"	13'-6"	21'-5"	17"	4	—	—	—		XXW-6866	—	XNE-50416	15	48"	10
18'	7'	6'	21'-6"	10'-6"	11'-9"	21"	3	XSW-6866	XSW-6867	XNE-5182	7½	XHW-6866	XHW-6867	XNE-557	10	48"	10
18'	7'	9'	21'-6"	10'-6"	14'-9"	21"	3	XSW-6868	XSW-6869	XNE-5182	7½	XHW-6868	XHW-6869	XNE-557	10	48"	10
18'	8'	6'	21'-6"	11'-6"	12'-5"	17"	3	—	—	—		XXW-6868	XXW-6869	XNE-50425	20	48"	7½
18'	8'	9'	21'-6"	11'-6"	15'-5"	17"	3	—	—	—		XXW-6870	XXW-6871	XNE-50425	20	48"	7½
18'	8'	12'	21'-6"	11'-6"	18'-5"	17"	6	—	—	—		XXW-6872	—	XNE-50425	20	48"	7½
18'	8'	15'	21'-6"	11'-6"	21'-5"	17"	6	—	—	—		XXW-6874	—	XNE-50425	20	48"	7½
18'	10'	9'	21'-6"	12'-6"	15'-5"	17"	3	—	—	—		XXW-6878	XXW-6879	XNE-50417	20	(2) 42"	5
18'	10'	12'	21'-6"	12'-6"	18'-5"	17"	6	—	—	—		XXW-6880	—	XNE-50417	20	(2) 42"	5
18'	10'	15'	21'-6"	12'-6"	21'-5"	17"	6	—	—	—		XXW-6882	—	XNE-50417	20	(2) 42"	5
20'	7'	6'	23'-6"	9'-6"	11'-9"	21"	4	XSW-6872	XSW-6873	XNE-5240	7½	XHW-6872	XHW-6873	XNE-580	15	(2) 42"	7½
20'	7'	9'	23'-6"	9'-6"	14'-9"	21"	4	XSW-6874	XSW-6875	XNE-5240	7½	XHW-6874	XHW-6875	XNE-580	15	(2) 42"	7½
20'	8'	6'	23'-6"	11'-6"	12'-5"	17"	4	—	—	—	—	XXW-6884	XXW-6885	XNE-50426	25	48"	10
20'	8'	9'	23'-6"	11'-6"	15'-5"	17"	4	—	—	—		XXW-6886	XXW-6887	XNE-50426	25	48"	10
20'	8'	9'	23'-6"	11'-6"	15'-5"	17"	4	—	—	—		XXW-6908*	XXW-6909*	XNE-50426	25	48"	10
20'	8'	12'	23'-6"	11'-6"	18'-5"	17"	8	—	—	—		XXW-6888	—	XNE-50426	25	48"	10
20'	8'	15'	23'-6"	11'-6"	21'-5"	17"	8	—	—	—		XXW-6890	—	XNE-50426	25	48"	10
20'	10'	9'	23'-6"	12'-6"	15'-5"	17"	4	—	—	—		XXW-6894	XXW-6895	XNE-50427	25	(2) 42"	
20'	10'	9'	23'-6"	12'-6"	15'-5"	17"	4	—	—	—		XXW-6910*	XXW-6911*	XNE-50427	25	(2) 42"	
20'	10'	12'	23'-6"	12'-6"	18'-5"	17"	8	—	—	—		XXW-6896	—	XNE-50427	25	(2) 42"	
20'	10'	15'	23'-6"	12'-6"	21'-5"	17"	8	—	—	—		XXW-6898	—	XNE-50427	25	(2) 42"	7½

NOTES: *Asterisk Indicates [illegible] [illegible] Page 11

Models Shown [illegible] Heavy Wash [illegible]

Social Services

Scott M. Matheson, Governor, State of Utah
Anthony W. Mitchell, Ph.D., Executive Director

March 1, 1978

Phillip E. Lammi
Dept. of the Air Force
Regional Civil Engineer
Western Region (HQ USAF)
630 Sansome Street
Room 1316
San Francisco, Calif. 94111

RE: Hill AFB Landing Gear
Overhaul Facility

Dear Mr. Lammi:

Thank you for your response to our request for omitted data. The proposal has been reviewed and it has been determined that more detailed information is required for our evaluation as follows:

1. Fume scrubber and mist eliminator in the chemical cleaning area, also quantity of cleaning fluids used.

2. Paint booths with scrubber, also quantity and type of paints, and paint thinner.

3. Type of emissions from the process ovens.

4. Baghouse in the mechanical cleaning area along with efficiencies, type, and flow rate.

5. Melt furnaces, type of firing, and control you are reminded that the state is requiring best control technology for both particulate and hydrocarbons on new facilities.

Sincerely,

Alvin E. Rickers
Executive Secretary
Utah Air Conservation Committee

JTB:jw

cc: L/C Harry Russell, Hill AFB

Division of Health
Environmental Health Services Branch
Lynn M. Thatcher
Deputy Director of Health

150 West North Temple, Suite 426
P.O. Box 2500, Salt Lake City, Utah 84110
801-533-6121

An Equal Opportunity Employer

DE
DE ET
AHS 27

FROM: MA

21 MAR 1978

SUBJECT: Landing Gear Overhaul Facility - Notice of Intent to Construct (Your Ltr, 6 Mar 1978)

TO: DE

The questions asked by the attached Social Services letter of 1 March 1978 are as follows:

a. Fume scrubber and mist eliminator in the chemical cleaning area, also quantity of cleaning fluids used:

(1) The fume scrubber system is a water wash, impingement ball type pack 12 inches thick with 1,200 square feet of surface area. Water is sprayed through a pressure nozzle system across the entire face of the scrubber pack at a rate of 1 1/3 gallons per minute per square foot of pack. The tank ventilation discharge air is distributed across the face of the pack. The maximum velocity through the scrubber system shall not exceed 400 FPM. Downstream from the scrubber pack system will be 800 square feet of Z-frame moisture eliminators. This system shall be certified to remove at least 99 percent of the soluble contaminates from the ventilation effluent air stream.

(2) The total volume of paint stripping and cleaning agents used in this process is 116,300 gallons.

b. Paint booths with scrubber, also quantity and type of paints, and paint thinners:

(1) All paint spray operations in building 507 will be accomplished in seven water wash type paint booths. These booths will be four DeVilbiss Model XXW-6848, size 8' X 9' X 10' working area with 14,000 CFM exhaust fans, and three Model XSW, size 10' X 12' X 14' working area and 27,175 CFM fans. Exhaust air from these booths will be to the atmosphere.

(2) The types of paint, thinners and anticipated weekly volumes of sprayed finished are:

(a) Acrylic lacquer, MIL-L-1953-7, 15 gallons

(b) Lacquer primer, MIL-C-8514, 5 gallons

(c) Polyurethane paint, MIL-C-8328-6B, 10 gallons

(d) Epoxy base paint, MIL-C-23377C, 10 gallons

(e) Polyurethane thinner, MIL-T-81772, 12 gallons

(f) Cellulose nitrate thinner, MIL-TT-T2660, 50 gallons

(g) Denatured alcohol, 15 gallons

c. Type of emissions from process ovens: There will be five process ovens installed in the landing gear overhaul facility.

(1) Three each expansion ovens with thru-belt conveyors to be used to thermally expand aircraft wheels so the bearing cups can be removed. These ovens are electrically heated with a maximum temperature of 400°F. No product or combustion emissions will be generated.

(2) One each paint drying oven that is heated by infrared lamps to a maximum temperature of 250°F. Emissions will be small quantities of volatile paint thinners.

(3) One each steel bake oven to be used to release entrapped hydrogen in steel aircraft components that was introduced during chemical cleaning. This oven is heated by natural gas firing with an electrically heated backup system. The maximum temperature will be 375°F and no product emissions will be generated. The only emission to the atmosphere will be the combustion by-products of the natural gas firing system.

d. Bag house in the mechanical cleaning area along with efficiencies, types and flow rate: There will be five bag house type dust collectors installed outside the building to support all mechanical (air blast) cleaning of aircraft parts. The parts air blasted are steel and aluminum. The blast media will be 80-180 grit alum oxide or agasite (walnut shell or cracked hard wheat). Three of these units will be 10,000 CFM cloth screen collectors with 2,800 square feet of filtering fabric, one 6,500 CFM unit and one 6,000 CFM unit. One 10,000 CFM unit is a Pangborn CH-3 type and four are American Air Filter Corporation Fabric Pulse machines. Units are designed to comply with current OSHA requirements.

e. Melt furnaces, type of firing and control: There will be four each melt furnaces installed in the foundry area. Two of these furnaces are 1,000 pound capacity tilt type units and will be used to pour lead and Kirksite (lead zinc copper alloy) drop hammer dies, with a maximum temperature of 1,000°F. Two furnaces of 250 pound capacity will be used for aluminum and brass casting. These units are fired by natural gas and forced air draft. All controls are automatic. The only emissions from these units will be the products of combustion from natural gas and forced air draft.

LEWIS G. CURTIS, COL, USAF
Director of Maintenance

8 MAR 1978

FROM: DE

SUBJECT: Landing Gear Overhaul Facility - Notice of Intent to Construct

TO: MA

The Air Force is now obligated to apply for state air quality permits for the construction of any facility whose operation involves the production of air pollutants. Utah's terminology for this application is "Notice of Intent to Construct" and AFRCE is responsible for its submittal for all MCP projects. The Western Region of AFRCE has submitted the "Notice" on the equipment installation for the subject project and the State Division of Health has requested additional information in the attached letter. Base Civil Engineering has been tasked to assemble this information and is requesting assistance from MA as the using agency. Please furnish as much information as possible on those items in the attached letter no later than 17 March 1978. The point of contact from Civil Engineering on this request is Keith Davis (Extension 2145).

SIGNED

1 Atch
State Letter

[illegible]
Deputy [illegible]
Civil Engineering Division

DEEX-E

DEEX

DEE

MAILED

4.2.4-1057

Social Services

Scott M. Matheson, Governor, State of Utah
Anthony W. Mitchell, Ph.D., Executive Director

March 1, 1978

Phillip E. Lammi
Dept. of the Air Force
Regional Civil Engineer
Western Region (HQ USAF)
630 Sansome Street
Room 1316
San Francisco, Calif. 94111

RE: Hill AFB Landing Gear
Overhaul Facility

Dear Mr. Lammi:

Thank you for your response to our request for omitted data. The proposal has been reviewed and it has been determined that more detailed information is required for our evaluation as follows:

1. Fume scrubber and mist eliminator in the chemical cleaning area, also quantity of cleaning fluids used.

2. Paint booths with scrubber, also quantity and type of paints, and paint thinner.

3. Type of emissions from the process ovens.

4. Baghouse in the mechanical cleaning area along with efficiencies, types, and flow rate.

5. Melt furnaces, type of firing, and control you are reminded that the state is requiring best control technology for both particulate and hydrocarbons on new facilities.

Sincerely,

Alvin E. Rickers
Executive Secretary
Utah Air Conservation Committee

JTB:jw

cc: L/C Harry Russell, Hill AFB

Division of Health
Environmental Health Services Branch
Utah Air Conservation
Utah Department of Health

[illegible] North Temple, Suite 6, 6
P.O. Box [illegible] Lake City, Utah 84110
801-533-6121

4.2.4-1058

DEPARTMENT OF THE AIR FORCE
REGIONAL CIVIL ENGINEER, WESTERN REGION (AFESA)
630 SANSOME STREET – ROOM 1316
SAN FRANCISCO, CALIFORNIA 94111

4 January 1978

Al Rickers, Executive Secretary
Utah Air Conservation Committee,
Bureau of Air Quality
P.O. Box 2500
Salt Lake City, Utah 84110

RE: Aircraft Landing Gear Overhaul Facility, Hill AFB - Notice of Intent to Construct

Dear Mr. Rickers

Pursuant to the Clean Air Act Amendments of 1977 and in compliance with Section 1.6 of the State Air Conservation Regulations, we are submitting a "Notice of Intent to Construct" for installation of Air Force operating equipment in the recently completed Aircraft Landing Gear Overhaul Facility. The information required by your regulations is inclosed as Atch 1. Additional information may be found on inclosed drawings as Atch 2. Because there are several hundred drawings involved in this project, we are forwarding only those drawings that we believe are applicable for your review. If you determine that these drawings are not sufficient, please advise us and we will furnish additional information.

The subject building structure is 100 percent complete and only the Air Force operating equipment remains to be installed. Please note in the pertinent information data (Atch 1) that the best available technology is proposed for reduction of air pollutants for each function.

Sincerely

Phillip E. Lammi

PHILLIP E. LAMMI
Chief, Environmental Planning Division

2 Atch
1. Notice of Intent (Pert Info)
2. Drawings

Copy to: 2849ABG/DE w/o Atch
AFLC/DE (T. Dunn) w/o Atch
AFRCE/CR (LTC Bohinc) w/o Atch

4.2.4-1059

AFRCE (MR LAMMI)

29 DECEMBER 1977

ION - Depot Aircraft Landing Gear Overhaul Facility

escription:

(1) Facility Function:

(a) The new Landing Gear Overhaul Facility will be a composite facility capable of supporting the depot-level overhaul of aircraft landing gear and selected Minuteman Missile components. The building is now constructed at a location immediately south of the Metal Process Building. The building is now being equiped and should be fully operational about January 1979. It will contain the overhaul capabilities now present in the Strut Shop, Wheels and Brakes Shop, Machine Shop and Welding Shop.

(b) Landing gear and missile components generated by IRAN programs, OOAMA aircraft production lines, and other supply sources will be processed through a central receiving and shipping area. All reparable item storage will be indoors.

(c) Each item will be completely disassembled, chemically and mechanically cleaned, and thoroughly inspected. A determination will then be made as to the feasibility of repair and the type and amount of work required before the item can be returned to supply channels as serviceable.

(d) A complete machining facility will perform any and all of the machine work required. A comprehensive tool and die capability is contained within the repair function. There are numerically controlled machine tools included where justified.

(e) A landing gear production area will provide the capability to rebuild struts, wheels and brakes. This includes painting and anticorrosion operations, item assembly, functional tests, and quality checks throughout the entire rebuilding operation.

(f) The majority of the work will follow a set process sequence and will be handled by a system of powered and nonpowered overhead conveyors, powered and nonpowered roller conveyors, forklifts, and standardized pallets. There will be minimum material handling by personnel.

(g) Machine work, other than that directly related to landing gear, will be deliverable directly to the Machine Shop by forklift truck.

(h) The welding and foundry operation located at the south end of the building will be capable of supporting the entire Directorate of Maintenance work load. It will range in capability from basic welding and foundry work to electron beam welding techniques.

(i) Additional support functions contained will be management and engineering offices, rest rooms, lunch rooms, tool cribs, raw material storage areas, and utility rooms for power and air distribution. A cafeteria will be added for the convenience of all personnel in the adjacent area.

(2) Sequence of Operations:

(a) Wheels, brakes, and strut repair operations are combined in this complex for the sequence of receiving, uncrating, disassembling, cleaning, inspecting, and routing.

(b) Normally wheels are routed to the Machine Shop for modification and/or repair, then, if required, to the metals process function for anodizing. A final machine operation is possible in many instances. Associate wheel parts (nuts, bolts, etc.) may go directly to any functional area, depending upon their initial condition. Finally, all parts are painted, assembled, tested, inspected, and shipped as serviceable assets.

(c) Brakes and brake parts follow the same general pattern as do the wheels.

(d) After the initial common operations, strut parts are normally routed to the metal processes function for plating and grinding, and then to the Machine Shop for final work. A significant number of struts receive machine work before going to metal processes. After plating, grinding, and machining all parts are combined with new hardware, assembled, painted, tested, inspected, and returned to supply channels as serviceable assets.

(e) The majority of the work input to the Welding Shop will be through the east door provided in that shop. It will be possible to input work from the landing gear function to the Welding Shop without moving the items outside.

b. Air Pollutants: Air pollutant emissions generated by the facility's operation will come from the chemical cleaning area, the mechanical cleaning rooms, the paint booths, the process ovens and the welding and foundry operation area. The facility will be heated by the existing base heating system. The areas producing pollutants are further described as follows:

(1) Chemical Cleaning Area: This area consists of some 58 tanks of various solutions at several different temperatures. The tanks are ventilated by a push-pull system and exhausted to a large collection system which is divided into inorganic and organic sections. A description of the tanks and their contents are provided in Table 1.

(2) Mechanical Cleaning: The mechanical cleaning consists of four walk-in blast rooms and one Roto-blast machine.

TABLE 1

CHEMICAL CLEANING AREA

Tank Solution	No. of Tanks	Total Solution Surface Area (Sq. Ft.)	Temp. (°F)	Exhaust Rate (CFM)
Degreasers (Product by TURCO undecided)	4	150	200	18,750
Paint Strippers				
El Dorado	2	270	180	33,750
B & B	2	162	180	20,250
Rust Stripper	2	216	180	27,000
Carbon Removers	2	180	180	22,500
B & B	2	360	180	45,000
Paint and Varnish Removers	2	167	180	25,000
Hot and Warm Water Rinses				
Warm	2	99		7,425
Hot	2	82.5		7,425
Hot	2	91.5		8,235
Hot	6	270		24,300
Warm	4	180		13,500
Warm	4	64		4,800
Hot	2	32		2,880
Bright Dip (12% CrO_3)	2	90	ambient	18,000
Ammonium Biflouride	2	90	ambient	18,000
Alkaline Etch	2	90	140-180	18,000
Annodize Strip	2	270	190-200	47,250
CrO_3 (higher %)	2	90	180	18,000
Corrosion Remover	1	96	190	9,600
CrO_3	1	16	180	3,200
Bright Dip	1	16	ambient	3,200
Dow 7	1	60	180	12,000
Solution Make Up Tanks	6	270	ambient	27,000

4.2.4-1062

(a) Blast Rooms: These four walk-in rooms will utilize aluminum oxide or agasite (walnut shells or crushed hard wheat) as the blast media. Each room will exhaust 10,000 CFM while in use which is estimated to be four hours per day, five days per week. The pollutants created will be particulates made up primarily of the blasting media with additional small amounts of aluminum and steel particles originating from the surface being cleaned.

(b) Roto-blast: This machine utilizes steel or cast iron shots for the blast media and will produce iron oxide and steel particulates going to the 6,000 CFM exhaust system. The exhaust system will operate only when the machine is operating; approximately 4 hours per day, 5 days per week.

(3) Paint Booths: The facility will have seven paint booths when completely operational. The booths comply with OSHA standards and each will exhaust 150 CFM per square foot of booth floor space. Four of the booths will exhaust 12,000 CFM each and the remaining three will exhaust 21,000 CFM each. Each booth will be used to apply about five gallons of paint per day, five days a week. Roughly equal amounts of acrylic laquer, urethane and epoxy base paints will be used in the booths.

(4) Process Ovens: The facility will have five miscellaneous process ovens, each exhausting 225 CFM and having a maximum temperture of 325 °F. The ovens will be used to dry work items and will emit basically hydrocarbon and paint fumes.

(5) Welding and Foundry Operations:

(a) Heli-arc Welding: This operation will have an enclosed bench area which will exhaust 18,000 CFM when in use. Inert gas welding fumes will be emitted from the bench.

(b) Bench Welding: There will be two benches where stick or straight arc welding will be accomplished. Each will exhaust 1,200 CFM.

(c) General Welding: There will be three additional 3,600 CFM fams in the general welding area which will be utilized when the area gets smokey. It is estimated the welding facilities will be operated at an average of about 20% of their capacity and the general area fans at about 10% of their capacity.

(d) Metal Melt Furnaces: The foundry will have two small metal melting furnaces for brass or aluminum. The furnaces will have a maximum temperature of about 1400 °F, a 1680 CFM fan and will be utlized approximately 40 hours per month.

(e) Tilt Melt Furnaces: The foundry will also have two tilt melt furnaces, one for lead and one for Kirksite. The furnaces will have a maximum temperature of about 800 °F, a 3,600 CFM exhaust fan each and will be utilized approximately 120 hours per month.

(f) Pour Area: The general foundry pour area will have a 3,600 CFM exhaust fan to pull out flux smoke during its usage which is estimated at 100 hours per month.

c. Cleaning Devices:

(1) Chemical Cleaning Area: As previously mentioned, fumes and vapors from the tanks are divided into an organic and an inorganic section of the exhaust system. Each section of exhaust goes through a wet fume scrubbe and a mist eliminator before being emitted to the atmosphere. The contractor is bound by contract to install a system which will remove 99 percent of the soluable contaminants from the ventilation effluents and the mist eliminator is to remove 99 percent of the entrained liquids.

(2) Mechanical Cleaning: Exhaust from each of the four blast rooms will go through a baghouse type dust collector before being emitted to the atmosphere. Each of these baghouses will have 2,800 square feet of cloth screen media. The Roto-blast machine will also be exhausted through a dust collector baghouse with cloth screen media before being emitted to the atmosphere.

(3) Paint Booths: Each of the seven paint booths will have a water curtain type scrubber on the exhaust system to reduce particulate emission.

(4) Process Ovens: Exhausted directly to atmosphere.

(5) Welding and Foundry Operation: All operations in this area are exhausted directly to the atmosphere. However, fumes from the two metal melt furnaces and the two tilt melt furnaces are exhausted through a stack which has a height of 30 feet between the furnace and the fan, allowing much of the particulate matter to drop out.

d. Location: The new facility is in the "Industrial Area" of Hill AFB, approximately 1600 feet northeast of the base's south gate. With the exception of the Chemical Cleaning Area all exhausts are vented to the atmosphere from the roof which is about 25 to 30 feet above ground level. The Chemical Cleaning Area is vented, after cleaning to the atmosphere by way of the concrete stacks immediately west of the facility. These stacks reach to about 40 feet above ground level.

e. Sampling Points: Exhausts from the facility will be regularly checked for opacity by Base Bioenvironmental Engineering.

ADDITIONAL INFORMATION

a. ADAL/Drone Engineering Research Test Facility:

(1) Phase I: This project consists of the construction of a 22,814 square foot gross area hangar capable of housing a C-130 aircraft and performing the functions of fuel cell repair and corrosion control. An office/locker/toilet element and a mechanical room will be located within the hangar to form a nose dock type configuration. No painting will be accomplished in this hangar and it will be heated by the existing base heating system.

(2) Phase II: This project consists of the construction of an 83,429 square foot gross area new shop and administrative support space facility. The 57,121 square foot ground floor will be utilized for preparation of drones/remotely piloted vehicles for flight, following buildup and modifications as well as for providing space for a computer room. The 26,308 square foot second floor will provide space for command, administrative and engineering support. This facility will also be heated by the existing base heating system. There will be no fire-up or ignition of drone motors in either this facility or that to be constructed under Phase I.

b. Alter Industrial Waste Treatment Facility:

Sludges from the treatment facility are dried in asphalt bottomed sludge beds adjacent to the facility. These sludges are disposed of by burial at the base's Toxic and Hazardous Wastes Disposal Site at Hill AF Range (west of the Great Salt Lake).