APPENDIX V
UPLAND DISPOSAL FACILITY ANALYSIS

INTRODUCTION

On November 1, 2002, the City of Tacoma submitted the Final Design Analysis Report (DAR) for the Thea Foss and Wheeler-Osgood Waterways Remediation Project to EPA. The DAR includes two disposal options, the Confined Disposal Facility (CDF) Disposal Option for the St. Paul Waterway, and the Upland Disposal Option. Section 6 of the DAR presents the habitat considerations and mitigation/restoration plan for each of the disposal options. The basis of design for the transloading pier, the principal component of the Upland Disposal Option, was presented in Final Design Appendix V Technical Memorandum: Thea Foss/Wheeler-Osgood Waterway Sediment Transloading Facility Siting Evaluation and Design/Performance Standard Analysis (November 1, 2002). The appendix presents an evaluation of multiple sites in Commencement Bay potentially suitable for the City's use as an offloading facility to transfer dredged sediments from the Thea Foss Waterway. The Middle Waterway location was the only alternative meeting the City's needs. Under this option, a barge would transport sediments from the Thea Foss Waterway to the Middle Waterway where the material would be unloaded and placed into rail cars for disposal at an upland location. In addition to the siting evaluation, Appendix V also includes the general design and performance standards for the pier structure and support facilities.

A working draft of Appendix V was provided to EPA for review on October 18, 2002. Comments provided by EPA on the working draft were not included in the final document distributed on November 1, 2002, due to production schedules.

In a letter to the City dated November 7, 2002, EPA required the City to submit a Technical Memorandum regarding the basic design of the transloading pier, mitigation and/or affirmative conservation measures for this pier, and a comparison of the mitigation and affirmative conservation measure calculations between those necessary for the CDF in the St. Paul Waterway (CDF Disposal Option) and those thought to be necessary for this pier. We understand that it is EPA's intent to use this information as the basis for a public notification process for the pier design. On November 21, 2002, the City met with EPA and the resource agencies to discuss outstanding habitat concerns relating to the CDF Disposal Option as well as new concerns regarding the Upland Disposal Option. Then, on December 5, 2002, the City, EPA, and the resource agencies discussed the mitigation plan proposed by the City for the Upland Disposal Option during a site walk at the St. Paul/Middle Peninsula.

The City submitted the draft Technical Memorandum to EPA on December 16, 2002. This document expanded on the analyses presented in Section 6 and the Siting Evaluation and Design/Performance Standard Analysis (Appendix V of the November 1, 2002, submittal). Comments on the technical memorandum were received from EPA on January 6, 2003.

This appendix includes the following documents:

- Part I: Technical Memorandum
  Thea Foss/Wheeler-Osgood Waterway
  Sediment Transloading Facility Siting Evaluation and
  Design/Performance Standard Analysis
  Prepared by Cosmopolitan Engineering Group,
  Anchor Environmental, and
  KPFF Consulting Engineers
- Part II: Technical Memorandum
  Upland Disposal Facility Design
  and Habitat Considerations
- Part III: Middle Waterway Transloading
  Pier Geotechnical Engineering Design Study
- Part IV: Responses to EPA
  Comments on the Technical Memoranda

PART I: TECHNICAL MEMORANDUM
THEA FOSS/WHEELER-OSGOOD WATERWAY
SEDIMENT TRANSLOADING FACILITY SITING EVALUATION
AND DESIGN/PERFORMANCE STANDARD ANALYSIS

PREPARED BY
COSMOPOLITAN ENGINEERING GROUP,
ANCHOR ENVIRONMENT, AND
KPFF CONSULTING ENGINEERS

FINAL DESIGN

Technical Memorandum:
Thea Foss / Wheeler-Osgood Waterway
Sediment Transloading Facility
Siting Evaluation and Design/Performance Standard Analysis

Executive Summary

The City of Tacoma's cleanup of the Thea Foss / Wheeler-Osgood Waterways will require dredging and disposal of over 500,000 cubic yards of contaminated sediments. Disposal of these sediments at an upland landfill site is one disposal option under consideration. This option would require transfer of the dredged sediments from barge to rail at a suitable location. The City has considered the basic requirements and performance standards for an off-loading facility capable of moving sediments from barge and to rail (hereinafter called the "transloading facility"), building on conceptual engineering analyses contained in the Puget Sound Multi-User Confined Disposal Site Study (MUDS), and factoring in site-specific safety, feasibility, effectiveness and cost considerations. Moreover, in order to support the Thea Foss / Wheeler-Osgood Waterway cleanup schedule, the transloading facility must be capable of sustaining off-loading rates of 5,000 to 6,000 tons of sediment (2-4 barges) per day during the in-water construction window. Based on the analyses summarized herein, the optimal transloading facility:

- Would be located in close proximity to the Thea Foss;
- Would have local rail and road access; and
- Would also have at least 4 acres of uplands available to support dock offloading operations and provide needed sediment, container, and/or rail car holding areas.

Obviously, any such facility must be available to the City at a reasonable lease or purchase price for the next 2-3 years.

Based on these criteria, the City prepared a comparative evaluation of 11 potentially available properties within Commencement Bay. Of those sites, only 5 were determined to be available for the duration of the cleanup project (a Wheeler-Osgood Waterway site; the Middle Waterway peninsula; Terminal 7 / Sitcum Waterway; the Joseph Simon/Hylebos site; and the Asarco site). However, the Wheeler-Osgood and Terminal 7 sites were deemed inadequate for this project, primarily because of insufficient upland holding areas (2 acres or less available). The Asarco site was also deemed inadequate based on a number of criteria, the foremost being the lack of local rail access and potential conflicts/risks associated with ongoing Superfund cleanup activities at that site. Only two sites are expected to be available without complicated resolution of feasibility or acquisition issues (Middle Waterway peninsula and Hylebos/Simon property).

Both the Middle Waterway and Simon properties currently lack adequate pier structures, but have the needed upland holding areas, and also have adequate local rail access. However, the greater distance of the Simon site from the Thea Foss, along with potential conflicts with recently-completed upland/shoreline cleanup (MTCA) and associated habitat restoration activities, and potential conflicts/risks associated with ongoing waterway sediment cleanup (Superfund) activities in the immediate area, render the Simon site significantly less desirable than the Middle Waterway peninsula location. Upland or waterway conflicts are not expected with use of the more proximal Middle Waterway peninsula site. Moreover, use of the Middle Waterway peninsula as a transloading facility would also include donation by Simpson of additional lands for habitat creation or enhancement. Based on the evaluation summarized herein, the Middle Waterway peninsula was identified as the preferred transloading facility site for the Thea Foss / Wheeler-Osgood Waterway sediment cleanup project.

This Technical Memorandum also describes the performance standards necessary for implementation of the upland disposal option, including performance specifications for a transloading pier, which would be constructed on the Middle Waterway peninsula. Requirements for the transloading pier are not markedly different from performance specifications previously developed for other similar transloading facilities in the region, including those presented in the MUDS study. The analysis presented herein also evaluates consistency of the prospective Middle Waterway peninsula transloading facility with locational criteria, including habitat considerations and applicable or relevant and appropriate requirements (ARARs), as identified in the U.S. Environmental Protection Agency's (EPA's) Record of Decision and Explanations of Significant Differences (ESDs) for the Commencement Bay Nearshore/Tideflats Superfund Site (CB/NT).

It is important to note that EPA's 2000 CB/NT ESD previously authorized a relocated log haul-out at the mouth of Middle Waterway as part of the St. Paul Waterway confined disposal facility (CDF) option, and Simpson previously identified the footprint of a commercial pier adjacent to the log haul out on Middle Waterway. The potential habitat impacts of both facilities were evaluated in EPA's July 2000 Interim Final CB/NT Clean Water Act determination and associated 404(b)(1) Evaluation. Moreover, such facilities were found to be consistent with existing Shoreline Management regulations, local land use plans, and other ARARs. As the transloading pier is likely to replace the commercial pier and log haul-out associated with the CDF option with a facility footprint smaller than the previously-proposed commercial pier, any habitat impacts or regulatory implications of the Middle Waterway transloading facility are expected to be considerably less significant under the upland disposal option, as compared to the CDF option.

Finally, the sediment transloading facility required for the Thea Foss / Wheeler-Osgood Waterway cleanup project could also be effectively and efficiently reused by Simpson as a future log transfer dock. As sediment pier capacities are reflective of a facility designed to handle high throughput requirements relative to other regional facilities (as necessary to meet the project schedule), the sediment pier is expected to be more than adequate for log off-loading requirements. However, to the extent Simpson would need to expand the facility beyond that necessary for the Thea Foss cleanup/transloading remedy, it may be considered a "betterment" as this term has been defined under Superfund policies. The scope of potential betterments and the associated regulatory review/approval process are described in this submittal.

As evaluated in this memorandum and appendix, the specifications for a commercial pier useable for log transloading involve lower weight loadings and containment requirements than are needed for the sediment transloading facility. Moorage and ancillary facilities for such a facility also appear to be the same or less than those necessary for a sediment transloading facility. At this time, no increases in size, footprint, structural support, or other facility design elements have been identified for future reuse of the pier by Simpson. Likely modifications involve removal of certain elements of the pier that would no longer be needed, rather than an expansion of the pier facility.

Should modifications for future reuse involve a material expansion of the facility, these could be authorized under CERCLA policies as "betterments" as long as these are identified in conjunction with the remedial design approval and Superfund monies are not used to fund them, or could be separately permitted through the appropriate permit process (e.g., shoreline substantial development permit for in-water and upland work within 200 feet of the shoreline, and Clean Water Act Section 404/10, Hydraulic Project Approvals and related permits for in-water work). Separate permitting would appear to be more appropriate if any expansion were identified after the Superfund remedial design and approval process has been completed.

I. INTRODUCTION

Upland disposal of contaminated sediments is one of two disposal alternatives that the City intends to include in its bid specifications to potential contractors for implementing the Thea Foss / Wheeler-Osgood Waterway cleanup. The upland disposal option will require transferring dredged contaminated sediments from a barge to railcars for transport to an upland landfill. This off-loading will take place at a transloading facility within Commencement Bay.

In its comments on the April 2002 Design Analysis Report (DAR), EPA requested additional detail on the upland disposal option, including transloading operations and facilities. The City had originally proposed to construct such a facility at Simpson's property on the Middle Waterway peninsula, based on its knowledge of the availability, proximity, size, and infrastructure at the site arising from having worked with the property owner on the CDF option. However, EPA requested that additional investigation into other potential Commencement Bay sites be pursued and evaluated based on transloading facility needs, and in particular whether existing piers were available close to the remedial work in Thea Foss Waterway.

EPA also requested a detailed explanation of the technical basis of the transloading facility to assure that the design of the facility was necessary for implementation of the remedy, rather than primarily for other purposes such as commercial use. To this end, the City retained additional engineering firms familiar with Commencement Bay sites and with transloading facilities to assist in specifying the performance criteria for the design and location of a transloading facility and to evaluate potential sites. Consequently, the City and its contractors undertook this effort with the goal of identifying the best facility location, based on safety, effectiveness, feasibility and cost. Basic requirements for this transloading facility siting analysis were developed based exclusively on remedial project needs.

The analysis described herein indicates that other sites within Commencement Bay are likely available to the City, but also confirms based on the site selection criteria described in more detail below, that the Middle Waterway peninsula is the preferred location for a transloading facility. Consequently, in Section IV of this analysis, the Middle Waterway location was used to refine the facility design and to develop performance standards that will be included in contractor bid specifications, when approved by EPA. Note that efforts have been made to provide contractors with appropriate discretion in how the transloading facility will be designed and how it will function; however, design requirements and performance standards identified here and later in bid documents, will ensure the final facility meets project needs, habitat requirements and regulatory standards.

The City of Tacoma engaged an integrated team of consulting firms and its outside legal counsel to perform this transloading facility siting evaluation and design/performance standard evaluation, including Anchor Environmental, BBL, Cosmopolitan Engineering, Hart-Crowser, KPFF and Brown Reavis & Manning.

II. NEED FOR AND BASIC REQUIREMENTS OF A TRANSLOADING FACILITY

BASIC COMPONENTS

To accomplish upland disposal, the following basic components are required for a transloading facility:

1. Mechanical Dredging - As discussed in the Design Analysis Report, contaminated sediments will be dredged mechanically under the upland disposal option and placed onto a barge for transport to a transloading facility.

2. Moorage - The barge needs to be taken to a dock where the barge can be safely moored for off-loading. This step includes considerations of distance and time, as well as navigational access and conflicts.

3. Dock - The dock needs to be strong enough to bear the weight of both the saturated contaminated sediments and heavy equipment needed to lift the sediments from the barge and convey them to an upland container for transport by rail (and/or truck) to a permitted landfill. There are several methods that could be used to accomplish this transfer, ranging from use of clamshell buckets to conveyors. There will also be wood and other debris in the dredged material that needs to be removed, piled up, and transported to a permitted landfill. Dock design also involves considerations of footprint design and piling density to minimize habitat impacts and of source control and containment to avoid spillage and leakage.

4. Storage and staging area – There are several methods of storing or loading contaminated sediments into containers for transport. The facility needs to provide adequate area for these operations to occur, including any dewatering or collection of drainage into trucks for off-site disposal. Clean sediments that can be beneficially reused for cap material may also be stored in this area.

5. Direct rail and road access - The transloading facility requires on-dock rail and road facilities to enable efficient loading and removal of the waste. This also involves consideration of upland traffic and land use conflicts.

6. Rail staging and storage area – The transloading facility needs to have siding or direct access to rail storage so that individual container cars can be parked until sufficient containers have been filled to make up a train.

To minimize the time needed for in-water work and maintain the overall cleanup project schedule, dredging may occur nearly 24 hours per day. Thus, the transloading facility needs to be located where the above transloading operations can also occur during the day and night.

The contractor will be responsible for the final design of the facility in order to match the equipment the contactor will have available for both in-water and transloading operations. The transloading facility design and location criteria therefore need to allow the contractor to have a range of options for the precise equipment and methods of operation to be used, while meeting minimum performance standards to assure timely and reliable operation and protection of the environment.

THEA FOSS PRODUCTION REQUIREMENTS

Based on the Design Analysis Report, production requirements apply to the Thea Foss Waterway cleanup project as follows. Barge loads of contaminated sediments will be delivered from channel and harbor areas of the Thea Foss / Wheeler-Osgood Waterways to the transloading facility at an average rate of approximately 3,000 to 4,000 cubic yards per day (see Design Analysis Report Section 9.5.1). Given an average bulk sediment density of 1.5 tons per cubic yard, this is equivalent to a throughput rate on a mass basis of approximately 5,000 to 6,000 tons per day (roughly 2 to 4 barges per day, depending on the size of the barge used by the contractor). At a production rate of 6,000 tons per day, dredging of the Thea Foss / Wheeler-Osgood Waterways could be accomplished within roughly 7 months, while a production rate of 5,000 tons per day would require a somewhat extended 9 month dredging duration. Thus, in order to maintain the overall cleanup project schedule (i.e., to accomplish dredging within roughly 7 to 9 months and minimize the likelihood of extending dredging into a subsequent construction season), the transloading facility must be capable of sustaining off-loading rates of 5,000 to 6,000 tons of sediment per day throughout the in-water construction window. As explained in the Design Analysis Report, mechanical dredging is a required process option for upland disposal, in part to reduce the water content, bulking and volume of sediments to be disposed. Following safe and secure moorage of the sediment barges onto the transloading pier, the contaminated sediments will need to be transferred from barges to appropriate vehicles (e.g., lined 34-ton rail container cars) for transport to an upland landfill.

Although the precise duration of the project cannot be predicted with certainty, the performance specifications for the transloading pier need to provide for facility design and method of operation that would provide for high production rates to reduce in-water work time. If project duration were to take longer than noted above, the average throughput would still be substantial (on the upper bound of the other projects reviewed in this technical memorandum) and would still require a substantial staging area. As explained below, the minimum staging area criterion of 4 acres would still be tight under slower production rates.

REVIEW OF SIMILAR FACILITIES

Various transloading methods to effectively accomplish this transfer have recently been developed for other similar projects within the Puget Sound region, including:

1. *Puget Sound Multi-User Disposal Site (MUDS) Confined Disposal Site Study* (Corps, WDNR and Ecology 1999). The MUDS analysis developed conceptual-level plans for a waterfront transloading facility capable of handling average sediment throughput rates ranging from roughly 400 to 2,000 tons per day (250 to 1,000 cubic yards per day). The MUDS concept included a waterfront dock with a transfer apparatus consisting of a crane-mounted offloading clamshell bucket and hopper/conveyor assembly. The conceptual design included 3 to 5 acres (depending on throughput rate) of adjacent uplands to support dock offloading operations and provide needed sediment and/or off-site transport holding areas. Potential short-term passive sediment dewatering areas (up to 1 acre) were also incorporated into the MUDS analysis. Based on initial scaling of the MUDS concept to the Thea Foss / Wheeler-Osgood project, and assuming that dewatering may not be required in this case, a minimum of 4 acres (probably more) of adjacent uplands would likely be required to support the average transloading throughput rates anticipated during this cleanup project (i.e., approximately 5,000 to 6,000 tons per day).

2. *Port of Seattle / U.S. Army Corps of Engineers (Corps) East Waterway Stage I Sediment Disposal Project*. During the 1999/2000 in-water construction window, the Port of Seattle and Corps transloaded approximately 90,000 cubic yards of contaminated sediment dredged mechanically

from Seattle's East Waterway, achieving throughput rates across the dock of approximately 2,000 tons per day. In this case, the contractor offloaded sediment (using a crane-mounted clamshell bucket) from the barges directly onto the dock surface and adjoining upland area, where the sediment was dewatered as needed. Movement of sediment from the dock area to adjacent uplands, and into rail and truck transport vehicles, was accomplished efficiently using front-end loaders. The East Waterway project utilized approximately 4 acres of transloading facilities, including a relatively large 2-acre dock area. Thus, at least 4 acres (probably more) of the combined dock and adjacent upland area would likely be required to support the average transloading throughput rates anticipated during this cleanup project (i.e., approximately 5,000 to 6,000 tons per day).

3. *Ongoing Sediment Remedial Design Projects*. Currently, sediment transloading facilities are being designed for a range of other Superfund and MTCA cleanup projects within the Puget Sound region, including projects in Commencement Bay (e.g., Head of Hylebos Waterway), Harbor Island (e.g., Todd Shipyards), among others. Depending on site-specific requirements and contractor preferences, prospective transloading facilities for these other projects will likely include the two concepts outlined above, along with an additional variation of offloading sediment (again via crane-mounted clamshell) directly into lined containers placed on the dock. In this latter case, and in order to maintain required throughput rates, the containers would need to be rapidly transferred to a nearby storage location yard, potentially using top-pick container handling rigs or similar equipment. Similar to the options summarized above, at least 4 acres (probably more) of upland area would be required for adequate container and/or rail car storage adjacent to the transloading pier. Under this scenario and considering the 5,000 to 6,000 ton per day throughput requirement for the Thea Foss / Wheeler-Osgood Waterway cleanup project, the dock would need to be sized to allow movement of approximately 150 to 180 containers (34 tons each) per day. As with the other options, dock specifications would be dictated based on required operating areas and load support for the containers and crane, as well as spill containment requirements.

Thus, under any of the prospective transfer scenarios (or variants thereof) outlined above, the transloading facility must include a suitably-sized and suitably-located dock with offloading crane/clamshell bucket, along with at least 4 acres of adjacent uplands.

While hydraulic slurry pumping methods are potentially available for moving sediments, they were not retained for this evaluation for the following reasons: a) such methods have not been used previously or included in transloading facility designs for other similar facilities in Puget Sound; b) the likely need to add water to facilitate hydraulic slurry options in this application would adversely affect bulking characteristics; and c) anticipated debris within these sediments would further complicate hydraulic slurry pumping operations. The impracticability of hydraulic operations in this situation is discussed further in the MUDS document (Corps, WDNR, and Ecology 1999). Similarly, sediment offloading from barges using front-end loaders, while suitable for smaller-scale operations, has been found through prior Puget Sound experience (e.g., Head of Hylebos Waterway pilot dredge project) to be too slow to support the required 5,000 to 6,000 ton per day throughput rate necessary for the Thea Foss / Wheeler-Osgood Waterway cleanup project. Once sediments have been transferred to the dock, however, front-end loaders may be an efficient and effective method of sediment movement.

Another possible transloading method could involve direct clamshell placement of dredged contaminated sediments into lined containers on barges, followed by transfer of such containers (e.g., via crane) at a suitable pier facility, and then transporting the containers to an upland holding/rail area, potentially using top-pick container handling rigs or similar equipment. However, because of the difficulties of accurately

locating the clamshell dredge to load directly into containers (compared with loading into a barge), significantly slower dredging production rates would be associated with use of such a procedure, which would affect the overall cleanup schedule. That is, the prospective 12-cubic yard clamshell currently identified for dredging the Thea Foss /Wheeler-Osgood Waterway (see Section 2.4 of the DAR) measures approximately 8 to 12 feet in the closed position. Since the width of a typical container is roughly 8 feet, contractors would encounter considerable difficulties with sediment placement in this scenario, which would greatly slow production rates. Moreover, such placement difficulties would also markedly increase the risk of spillage, potentially resulting in additional residuals but also requiring the containers to be cleaned (decontaminated) prior to transport. In addition, direct placement would result in considerably greater amounts of free water being loaded into the container, with significant disposal cost implications. Construction of separate upland dewatering facility would further increase the upland holding area requirement. All information considered, direct placement of sediments into containers placed on barges was determined to be an impracticable option in this situation. This determination was also verified in conversations with local dredging contractors.

After sediment off-loading to upland or container storage, rail cars would be loaded either on pull-through rail or staged on siding/tail tracks until present in sufficient numbers to justify assembly into a train for transport to a landfill site. These transloading characteristics were identified as basic performance specifications for the Thea Foss / Wheeler-Osgood Waterway upland disposal option, as discussed below. Again, during the bidding process, the contractors will be provided appropriate discretion in the specific design and operation of the transloading facility. The basic design requirements and performance standards identified here and later in bid documents will ensure the final facility meets the project needs.

TRANSLOADING FACILITY SITING CRITERIA

Based on these transloading facility requirements, preliminary design analyses, and other known project requirements, basic criteria for evaluating potential transloading facility locations were identified. These criteria, described below, were divided into three tiers, recognizing their relative importance. Tier 1 includes the single, threshold question of whether the site is available to the City. Tier 2 represents the next most important criteria; sites deemed inadequate under these criteria are also not likely to be acceptable. Finally, Tier 3 represents criteria that are important to site acceptability but that, in some circumstances, can be remedied at some cost to the City or the land owner.

Tier 1 Criteria

Availability of Site for 2+ years. The City expects that, at the outside, the site will need to be available for 900 days. Evaluation of availability was based on discussions with site owners and/or lessees. The availability determination did not include considerations of cost. Instead, cost was considered as a Tier 2 criterion.

Tier 2 Criteria

Proximity to Thea Foss / Wheeler-Osgood Waterways. The costs and risks associated with sediment transport increase incrementally the farther an off-loading site is from the dredge source. Thus, a sediment transloading facility in close proximity to the areas to be dredged is strongly preferred to a facility located at great distance from the dredge locations (e.g. Asarco site is 5 miles from Thea Foss, Atofina site is 4.2 miles from Thea Foss).

Estimated Cost of Land (purchase or rental). Where property owners/operators indicated that a property was likely available, they were asked to estimate the lease or purchase price. Consequently, and except

for the Middle Waterway site, these costs are only initial estimates and not the results of any acquisition negotiations. This criterion also incorporates any ancillary *benefits* attached to use of a particular site that may off-set acquisition costs or other project costs (e.g. if the Middle Waterway site is used, Simpson will provide habitat lands—free of charge—for mitigation and/or restoration, if needed).

Existing Rail or Close Proximity to Rail. Sites were evaluated for rail access based on whether rail exists on the subject property and, if not, whether rail is located off-site within a reasonable distance from the proposed off-loading location such that extending the off-site rail would not be cost prohibitive. For example, the Asarco facility is approximately 2.5 miles from nearest rail and at a different grade, making rail extension prohibitively expensive.

Adequate Sediment Storage Adjacent to Pier. Dredging and deliver of sediments is expected to substantially outpace direct barge to rail car loading. To keep up, the facility performance standards include a barge pier with adjacent sediment and/or container storage capacity to allow for efficient off-loading into rail cars. Based on previous transloading facility evaluations, as summarized above, sites with two or more acres of useable land within close proximity to the off-loading location were deemed to have satisfied this criterion. A secondary benefit of sediment storage capacity would be the storage of clean sediments that may be needed for use as capping material and/or in habitat development associated with the Thea Foss cleanup; however, such sites must be relatively close to habitat or capping areas for this benefit to accrue.

Tier 3 Criteria

Close Proximity to Rail Car Storage (pull-through or siding/tail track). The ability to load and store loaded rail cars on site is likely to be necessary to achieve the required throughput rates (and thus support the overall Thea Foss / Wheeler-Osgood Waterway cleanup schedule) and will also likely lower overall costs. Rail storage can be achieved through either pull-through rail configurations or siding/tail track capacity, whereby additional tracks, parallel to the main track, are used for rail car storage. Sites where rail storage capacity exists or where there is adequate space to build rail storage capacity adjacent to or within close proximity to the off-loading location, were deemed adequate under this criterion. A site that must rely exclusively on backing-in single rail cars, with no rail storage configuration nearby, would be deemed inadequate under this criterion. Other than Middle Waterway, where availability of BNSF rail is known, the information is at a preliminary screening level because detailed confirmation would require negotiations with the railroads that would serve the upland landfill.

Existing, Useable Pier. Sites with piers capable of handling a dredge barge and supporting a crane-mounted clamshell bucket of sufficient size to remove sediment in accordance with the methods described above, were deemed to satisfy this criteria**.** Aerial photographs, current and past use of existing piers and discussions with property owners were used to evaluate the condition and usefulness of existing piers. For purposes of this siting analysis, and consistent with the more detailed analysis presented in Section IV of this memorandum, a minimum pier face length of approximately 200 feet with sufficient structural capacity to support typical crane loadings, was deemed potentially suitable to support the transloading operation. Structural or other technical analyses of existing piers were not performed at this stage of the evaluation.

Deep Water Access. For those sites that do not currently have piers, deep water access was evaluated for potential construction of a pier. Deep water access was determined to sufficient if the site could accommodate a barge with draft of at least 15 feet.

Sufficient Site Size for Likely Re-Use of Pier. Cleanup elements that promote redevelopment and reuse opportunities are encouraged by the CB/NT ROD, 404(b)(1) Evaluation, CERCLA policies and current Superfund redevelopment initiatives. Pier re-use was not considered likely at sites where upland acreage adjacent to the pier or proposed pier location was minimal (e.g. Wheeler-Osgood site is only 2 acres) or was configured so as to be of limited use to future off-loading operations (e.g. Continental Grain site may be too narrow for many future off-loading operations).

Substantial Environmental / Land Use Compatibility and Other Factors. A number of other factors may affect whether siting of a transloading facility at a particular location is acceptable and/or preferable. Consistency with existing and planned land uses, including the City of Tacoma Shoreline Management Program, Clean Water Act Section 404, Endangered Species Act (ESA), and other ARARs were considered generally. Similarly, where a site is undergoing upland cleanup or contamination may still be present on-site though currently contained, constructing off-loading facilities and handling contaminated sediments at those sites presents a risk of exacerbating existing contamination and/or co-mingling contaminated sediments with existing site contamination. Also, a number of sites are located on the Hylebos Waterway, the cleanup of which will occur concurrent with the cleanup of the Thea Foss /Wheeler-Osgood Waterways; barge traffic and other cleanup vessels in the Hylebos may make delivery of sediments to the facility difficult and more costly. The absence of road access would also be reported here.

III.A. Initial Site Selection and Criteria for Further Analysis

Eleven (11) locations were selected for evaluation under the criteria outlined in the section above. This selection was based on an initial site survey and analysis of shoreline properties in Commencement Bay, discussions with other consultants and property owners familiar with the region, and suggestions by EPA staff. If a site is not likely to be readily available (Tier 1 criterion), information regarding Tier 2 and 3 criteria is included in the text and in the summary matrix, but is not further discussed in the conclusion section for that site. Initial sites selected, ordered based on availability and proximity to the Thea Foss Waterway, are as follows (see Figure 1):

1. Burlington Northern Wheeler-Osgood Waterway property
2. Simpson, Middle Waterway peninsula
3. Terminal 7 A, B, C (Sitcum Waterway)
4. Joseph Simon & Sons property / 1515 Taylor Way (Hylebos Waterway)
5. Asarco property (northwest of Thea Foss Waterway)
6. Continental Grain property, South (northwest of Thea Foss Waterway)
7. Continental Grain property, North (northwest of Thea Foss Waterway)
8. Atofina Chemical Factory / 2901 Taylor Way (Hylebos Waterway)
9. Jesse Engineering / Port of Tacoma (Blair Waterway)
10. Pioneer Chloralkali property / 605 Alexander Ave (Hylebos Waterway)
11. Pierce County Terminal (Blair Waterway)

Site 1 – Burlington Northern, Wheeler-Osgood Waterway

This property is a vacant 2 acre plot of land on the corner of the Wheeler-Osgood Waterway and the Thea Foss Waterway that is owned by Burlington Northern. The lot is located north of the J.M. Martinac Shipbuilding Corporation at East 15th Street. The tax parcel number is 0320041028. The site currently is covered in vegetation and has no visible structures. According to tax records, there are two areas on the site that are zoned for petroleum bulk stations and terminals and also an area zoned for a petroleum pipeline right of way. There was no visible evidence of any petroleum storage facilities or pipeline, but no investigation was conducted to determine whether such structures are buried.

The property owner has indicated that the site is for sale but could not, at present, provide a price.

The site does not have direct access to the water by rail or road, but both are in the vicinity. A Burlington Northern rail line stops approximately 200 feet from the shore along the property line with J.M. Martinac Shipbuilding Corporation's parcel.

The small size of the lot would not allow for efficient storage of sediments or loaded containers.

The rail line and the road would need to be extended. It is uncertain whether there is enough room on the property to allow for installation of additional track for adequate rail car storage.

The site does not have an existing pier, but the water gets deep quickly and there are a few large pilings near the shore. Tidal fluctuations extending into the useable (upland) property may be a concern on this site.

If a transloading facility was constructed there, the small size of the site makes re-use unlikely.

Conclusion. Tier 1: *This site is available but a price for sale or lease is not known.* ***Tier 2:*** *The site lacks a pier but has deep water access. However, the absence of upland storage would require direct barge to rail offloading and thereby precludes use of this site under the Tier 2 criteria. There is no current road access to the site, and adequate road access could be difficult to accomplish.* ***Tier 3:*** *Other concerns include rail car storage uncertainty and tidal fluctuations.*

Site 2– Simpson Tacoma Land Company

The Simpson site is a 7 acre plot of land at the tip of the peninsula between the St. Paul Waterway and the Middle Waterway. The site is owned by Simpson Tacoma Land Company. The total land area of the two lots is about 23 acres, but the proposed site is approximately 7 acres near the tip of the peninsula. The relevant areas of the site are not being used at this time. The tax parcel numbers for the two lots are 8950000564 and 8950000528.

This property is available at no charge to the City, in exchange for the City's funding of pier construction. If a decision is made this year, the site will be available when needed for the cleanup, and the property owner has agreed to provide land on- and off-site to the City for habitat mitigation/restoration, also at no charge (from land that is iden5tified in the existing habitat plan presented in the Design Analysis Report).

The site is about 0.25 miles from the entrance of the Thea Foss Waterway.

The site has rail access; the on-site spur terminates several hundred feet from the most likely location of the off-loading facility. The site has adequate sediment storage capacity adjacent to the likely location of the pier and additional area for remedial project construction staging if needed.

There is sufficient room on and adjacent to the peninsula to extend the rail and create rail car storage capacity.

There is no existing pier on the Middle Waterway peninsula; however, the Middle Waterway has adequate deep water access.

Operational conflicts with on-going Simpson mill activities are possible; however, the City and property owner have already negotiated coordination of site activities (in negotiating CDF terms at the site) such that operational conflicts are not expected. The environmental impacts of a log-haul out and commercial pier proposed for the Middle Waterway peninsula, have already been evaluated under EPA's July 2000

Interim Final CB/NT Clean Water Act determination and associated 404(b)(1) Evaluation. Sediment cleanup activities within the Middle Waterway are planned for areas removed from the likely pier location, and can be readily coordinated to minimize potential operational conflicts.

Conclusion. Tier 1: *This site is available, free of charge.* ***Tier 2:*** *This site has rail and adequate upland storage capacity and the free use of lands for habitat mitigation and/or restoration is a unique benefit of this site.* ***Tier 3:*** *This site lacks a pier, but has deep water access. Impacts of similar structures at this location have already undergone Clean Water Act / 404(b)(1) analysis. Operational conflicts are less likely due to coordination agreement with the property owner.*

Site 3 – Terminal 7 A, B, and C, Port of Tacoma

Site 3 is located on the northeast shore of Sitcum Waterway at Terminal 7 A, B, and C. The Port of Tacoma owns the land and operates a variety of businesses in the area. The property owner has indicated that the site is likely available for lease by the City for roughly $765,000 for 2+ years of use.

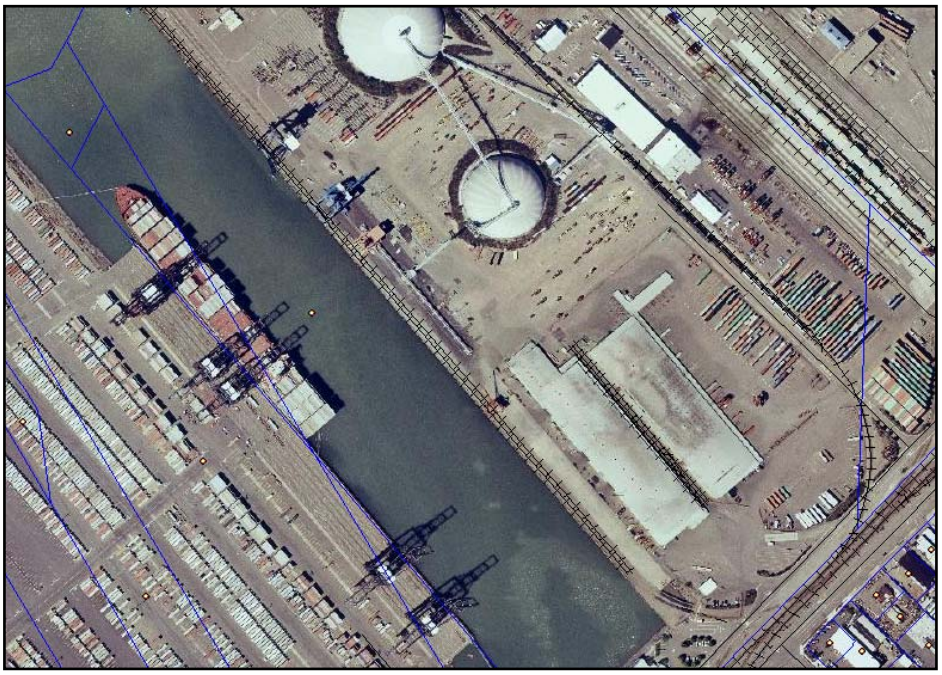

The site is approximately 1.35 miles away from the entrance of the Thea Foss Waterway.

The site has access by water, rail, and road. Two Tacoma Municipal Belt Line Railway lines run parallel to the edge of a concrete pier. The train lines are able to pull through the site without rearranging of rail cars. The entire terminal is paved.

Much of the area surrounding the rail line is consumed by Port operations, so space would be very limited. According to the owner, adequate sediment or container storage is not available at this site because this is a very active section of the Port of Tacoma.

The concrete pier is adequate for direct barge to rail off-loading.

Excessive site traffic and operational conflicts are also concerns. Re-use of this site is likely.

Conclusion. Tier 1: *This site is available at a price that is not prohibitive.* ***Tier 2:*** *Site traffic and other operations make upland sediment or container storage problematic, requiring direct barge to rail off-loading and thereby precluding use of this site under the Tier 2 criteria.* ***Tier 3:*** *Other concerns include conflicts with other site operations.*

Site 4 – Joseph Simon & Sons Inc.

The Joseph Simon & Sons property is a vacant 5.8 acre lot along the southern shore of the Hylebos Waterway at 1515 Taylor Way. It is owned by Joseph Simon & Sons, Inc. and is currently for sale or lease. The tax parcel number is 0321263030. Two years ago the site was cleaned up to MTCA standards and capped with gravel. No further development appears to have occurred on the site since cleanup was completed.

The site is available for lease. According to the property owner, if the City would pay for the permitting and construction of a useable pier, the lease would be inexpensive. An actual lease price was not presented to the City.

The site is approximately 3.6 miles from the entrance of the Thea Foss Waterway.

The property does not have rail access or a pier, but there are two rail lines that run to the water's edge just across the property line to the east. The rail lines are located on tax parcel number 0321264008 and are owned by Tacoma Industrial Properties. The lines are not currently being used for any rail traffic.

There appears to be enough space adjacent to the pier for sediment or container storage.

A large pier that is evident in earlier aerial photos of the site no longer exists. Also, the pier at the end of the existing rail line is a degraded wooden structure that is not suitable for transloading operations. Thus, either a new pier would need to be constructed or a major modification to the existing structure would be necessary for this site to function as a transloading facility. Deep water access is available.

Construction of a pier, adequate rail and containment areas at this capped MTCA site is a concern due to the potential to disturb that remedy. Similarly, transloading operations may adversely affect a restored mudflat that separates the existing uplands from the deeper waterway. Significant dredging and/or

capping actions are currently anticipated in the immediate vicinity of this site as an element of the Mouth of Hylebos Waterway cleanup project. There is also concern that considerable marine traffic associated with the Hylebos cleanup will interfere with barge operations. There is no existing industry at the site, so reuse of a transloading pier constructed at this site is speculative, but could be expected at some time in the future.

Conclusion. Tier 1: *This site is available at a price that is not prohibitive.* ***Tier 2:*** *Rail access and sediment storage must be constructed but should be adequate.* ***Tier 3:*** *This site lacks a pier, but has deep water access. However, the liability risks associated with performing significant construction activities at a capped MTCA site weigh against this site. In addition, the distance from the Thea Foss and the potential of conflicts with the Hylebos cleanup are not preferable.*

Site 5 – Asarco, Inc.

The Asarco site is a copper smelting plant that has been shut down for many years and is currently undergoing cleanup. Asarco, Inc owns the site. The tax parcel number is 895000310. The total area of the site is approximately 94 acres. Given site contamination and depending on the nature of the remedial action planned, only a small portion of the total area might be able to be used.

The site is available for lease at an estimated cost of $1.35 million.

The site is about 5 miles from the entrance to the Thea Foss Waterway.

All of the old rail lines have either been removed or buried during cleanup. The closest existing rail line is across Ruston Way and 30 feet above grade from the elevation of the site; however, if this site was to be used, approximately 2.5 miles of railroad would need to be constructed, across both undeveloped and recently developed land. This alone may make the site cost prohibitive.

The site has a concrete pier and access to deep water. The property owner reports that the pier needs approximately $350,000 in repairs; however the current condition of the pier was not compared to the transloading facility performance specifications.

Sediment storage is uncertain until the cleanup is completed.

Bringing contaminated sediments to a site that is already contaminated and undergoing active cleanup is a major concern. A detailed zoning and land use analysis was not made, but this site does not have the high priority industrial shoreline and land use designation of the Port Industrial Area.

Conclusion. Tier 1: *This site is available for a price that is not prohibitive.* ***Tier 2:*** *The costs of constructing rail access are likely prohibitive. The site is also 5 miles from the Thea Foss Waterway.* ***Tier 3.*** *The site has a pier that will require rehabilitation. However, concerns regarding liabilities associated with existing contamination and an ongoing cleanup, as well as local shoreline and land use considerations, also affect the feasibility for timely use of this site.*

Site 6—Continental Grain, South

The Continental Grain (South) site consists of three narrow waterfront lots owned by the Port of Tacoma near the entrance to the Thea Foss Waterway. The lots are located north and west of Thea's Park at 405 Dock Street and southeast of the Continental Grain storage facility and marine terminal at 11 Schuster Parkway. The tax parcel numbers for the three lots are 895002201, 895002121, and 8950002202. The Port of Tacoma leases lots 8950002201 and 8950002202 to Continental Grain.

The property owner has indicated that the property may not be available due to rail activity at the site.

The site is less that 0.25 miles from the mouth of the Thea Foss. The site can be easily accessed by rail, assuming current rail activity does not preclude use. Between four and eight Burlington Railroad lines run parallel to the waterfront. Trains would be able to pull through the site making it easier to load the cars.

The site is long and narrow and would allow little room for sediment storage. The approximate usable acreage (land without railroad lines or other structures) of all the sites is 3 acres.

The site does not have an existing pier. Thus, a new pier would have to be constructed along the rocky shoreline, which may add to the costs of construction. Because of the location and shape of the lots, it would be unlikely that the pier would be suitable for reuse once the dredging project is completed.

As food storage (grain) is also occurring at and near the site, development of this site as a sediment transloading facility may not be advisable.

Conclusion. Tier 1: *The site may not be available.* ***Tier 2:*** *Assuming it is available, site would likely be precluded under the Tier 2 analysis because the narrow lay-out of the site may preclude adequate sediment or container storage.* ***Tier 3:*** *The site has no pier, but does have deep water access. Existing rail operations may reduce efficient use of the site and there is the potential to interfere with the existing food storage operations.*

Site 7 – Continental Grain, North

The Continental Grain, North site is a 3 acre plot of land located just north of the Continental Grain storage and marine transfer facility. The site is owned by Burlington Northern and is currently being used for storage of shipping containers. The tax parcel number is 8950002272.

The property owner has indicated that the property may not be available due to rail activity at the site.

The site is approximately 0.25 miles from the mouth of the Thea Foss Waterway.

The site has access by rail; two main Burlington Northern rail lines run along the edge of the site and there is also a short spur that ends there as well. Trains should be able to pull through the site making it easier to load and possibly store rail cars.

The site is long and narrow and would not allow room for a large amount of sediment storage or additional container storage.

The site does not have a usable pier but does have deep water access. Along the shoreline there are concrete pilings, which may be remnants of an old pier. This site might be suitable if sediment were to be transferred directly from barge to rail car.

Conclusion. Tier 1: *The site may not be available.* ***Tier 2:*** *Assuming it is available, site would likely be precluded under the Tier 2 analysis because the narrow lay-out of the site may preclude adequate sediment or container storage.* ***Tier 3:*** *The site has no pier, but does have deep water access. Existing rail operations may reduce efficient use of the site.*

Site 8 – Atofina Chemical Factory

This site is a chemical factory owned by Elf Atochem North America at 2901 Taylor Way. It is located on the southern shore of the Hylebos Waterway across the water from General Metals of Tacoma. The factory has not operated for many years. The tax parcel number is 0321351041. The entire chemical plant is located on about 20 acres.

The property owner has indicated that the site is not likely to be available due to concurrent Head of Hylebos Waterway cleanup operations scheduled to begin in 2003. While limited temporary capacity is potentially available concurrent with the Head of Hylebos cleanup schedule, there is not sufficient capacity at this site to also accommodate the 6,000 ton per day throughput requirement for the Thea Foss / Wheeler-Osgood project.

The site is approximately 4.24 miles away from the entrance of the Thea Foss Waterway.

The site has access by both rail and water. The railroad access allows the trains to pull through the site, past a pier and lined stockpiling yard, without having to rearrange the cars.

On the north end of the site there are four lined stockpiling yards that were once used for storing salt. Sediment storage capacity would appear to be sufficient; however, it is unclear if the storage area is close enough to the pier for it to be useful.

The concrete pier remains in good condition. Some additional facilities are likely to be needed to meet the pier requirements for transloading operations (containment, etc).

The cleanup of the Atofina Chemical factory is scheduled to be completed shortly. There are concerns about liability arising from the introduction of contaminated sediments to a site that already has an existing contamination problem. There is also concern that marine traffic associated with the Hylebos cleanup will interfere with barge operations.

Conclusion. Tier 1: *The site is not likely to be available.*

Site 9 – Jesse Engineering, Port of Tacoma

The Jesse Engineering / Port of Tacoma site is located on the northeast shore at the entrance to the Blair Waterway, where a Tacoma Municipal Belt Line Railway line ends between Jesse Engineering and North Coast Yachts. The Port of Tacoma owns and leases the property to both of the above businesses. The property owner has informed the City of Tacoma that operations at Jesse Engineering would likely conflict with any transloading operations at the site and, consequently, the site is not likely to be available.

The site is approximately 1.70 miles away from the entrance of the Thea Foss Waterway.

The rail line at the site is a single track that dead ends near the water's edge, but several hundred yards from the pier at the site.

Approximately 3 to 4 acres of paved land surrounds Jesse Engineering's building. It is unknown how much of this land is used in the operation of Jesse Engineering's business and parking for their employees, however, it seems unlikely that rail car storage could be constructed at the site. Similarly, it appears unlikely that there is adequate acreage for sediment or container storage at the site.

There is no pier near the end of the rail line, but there is large pier several hundred feet away to the northwest at the entrance to the Blair Waterway. The pier needs substantial rehabilitation if it were to be used for barge unloading, estimated in the hundreds of thousands of dollars.

Conclusion. Tier 1: *The site is not available.*

Site 10– Pioneer Chloralkali Company

This site is a chemical factory that is owned by Pioneer Chloralkali Company at 605 Alexander Avenue. It is located on the southern shore near the entrance to the Hylebos Waterway. In recent years, operation of the factory has been discontinued. The tax parcel numbers are 2275200560, 2275200040, and 2275200050. The entire chemical plant is located on 31.33 acres of land. Except for parcel number 22775200040, storage tanks and factory buildings occupy the majority of the 31.33 acres. Tax parcel 22775200040 includes approximately 4 acres of paved parking lot and a 2-acre lined stockpiling yard that was once used for storing salt (the large white rectangle in the photo below).

The property owner has indicated that this site is not available. Portions of the site are also currently being used to support ongoing Superfund and MTCA/RCRA cleanup efforts, including the Area 5106 Removal Action.

The site is approximately 2.25 miles away from the entrance of the Thea Foss Waterway.

The site has access to rail. There are a large number of rail lines running to or close to two existing concrete piers at the site. Rail car storage seems likely given the number of lines, particularly with some minimal reconfiguration of tracks.

The 2 acre lined stockpile yard on site may be useful for sediment storage.

It appears that the pier closer to the inlet of the Hylebos Waterway was once used to transfer material to and from a stockpiling yard. This pier is also closer to the end of several rail lines.

The site is currently undergoing cleanup from years of use as a chemical manufacturing facility. There are concerns about liability arising from introduction of contaminated sediments to a site that already has an existing contamination problem. There is also concern that marine traffic associated with the Mouth of Hylebos Waterway cleanup will interfere with barge operations.

Conclusion. Tier 1: *The site is not available.*

Site 11 – Pierce County Terminal, Port of Tacoma

The Pierce County Terminal is at Port of Tacoma pier at the end of the Blair Waterway. The area surrounding the pier is currently used for storing imported vehicles that are waiting to be distributed around the country.

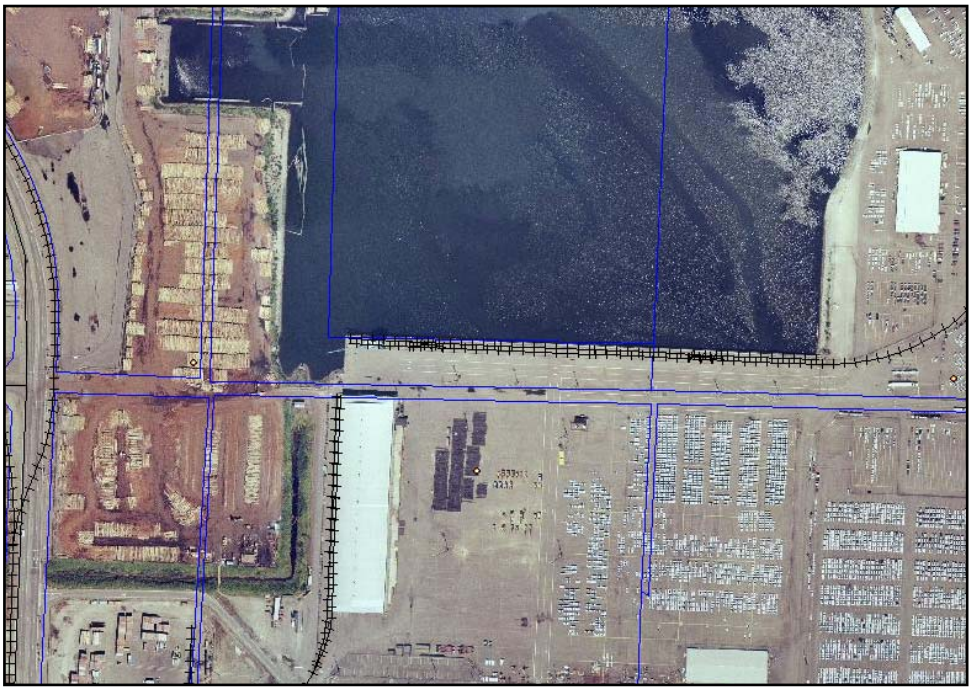

The property owner has indicated that the site is not available due to a major redevelopment project planned for the pier and surrounding area that is expected to begin within the next year.

The site is approximately 4.05 miles from the entrance to the Thea Foss Waterway.

The pier has two Tacoma Municipal Belt Line Railway lines running parallel to the water. Rail car storage capacity is not likely given expected activities at the site. Similarly, the site would not appear to have adequate sediment storage or container storage capacity.

The pier is asphalt surfaced and maintained by the Port of Tacoma.

Conclusion. Tier 1: *The site is not likely to be available.*

III.B. Site Comparison Matrix

Table 1. Summary Evaluation of Potential Transloading Sites for Thea Foss Cleanup

Site & Owner		Tier 1	Tier 2				Tier 3				
Potential Sites (in order of availability and proximity)	**Ownership & Tax Lot**	**Availability for 2+ years?**	**Proximity to Thea Foss Waterway**	**Estimated Cost of Land (purchase or rental)**	**On-Site Rail or Close Proximity to Rail**	**Adequate Sediment Storage Adjacent to Pier?**	**Close Proximity to Rail Car Storage? (pull-through or siding/tail track)**	**Existing Useable Pier?**	**Deep Water Access, Suitable for Pier?**	**Sufficient Site Size for Likely Re-Use of Pier?**	**Substantial Environmental & Land Use Compatibility / Other Factors**
(1) BN, Wheeler-Osgood Waterway	BNSF RR 0320041028	Yes	In Thea Foss Waterway	Unknown, but property for sale	Yes, off-site	No 2 acres	Uncertain	No	Yes, but tidal fluctuations a problem?	Probably not	No road access to waterway.
(2) Simpson, Middle Waterway	Simpson Tacoma Land Company	Yes	0.25 mi.	None	Yes	Yes 7+ acres	Yes	No	Yes	Yes	Will provide habitat lands if needed
(3) Terminal 7 A,B,C (Sitcum Waterway)	Port of Tacoma	Yes	1.35 mi.	Est. Rental $765,000	Yes	No, direct barge to rail loading required	Probably	Yes	Yes	Yes	(1) Direct barge to rail loading required (2) excessive site traffic
(4) 1515 Taylor Way (Hylebos)	Joseph Simon and Sons, Inc.	Yes	3.60 mi.	Unknown, but likely inexpensive if pier built is re-useable by property owner.	Yes	Yes 5.8 acres	Probably	No	Yes	Yes	(1)Coordination with Hylebos cleanup, barge traffic; (2) recent upland MTCA cleanup, capped hazardous substances on-site.
(5) Asarco (Ruston)	Asarco Inc.	Yes	5 mi.	Est. Rental $1.35 million	No 2.5 mi. from nearest rail.	Uncertain	No	No. Needs approx. $350,000 in rehabilitation	Yes	Yes	Upland Superfund cleanup
(6) Continental Grain South (Foss)	Port of Tacoma (leased by BNSF/Continental)	Not likely	At mouth of Thea Foss Waterway	N/A	Yes	No, direct barge to rail loading required	Uncertain, existing rail in use	No	Deep water access but shoreline likely unsuitable for pier.	Probably not	(1) Concern re: proximity to food storage; (2) rail traffic conflicts.
(7) Continental Grain North (north of Foss)	Continental Grain (leased by BNSF/Continental)	Not likely	0.25 mi.	N/A	Yes	No, direct barge to rail loading required	Uncertain, existing rail in use	No	Yes	Probably not	Rail traffic conflicts

Table 1 (cont'd). Summary Evaluation of Potential Transloading Sites for Thea Foss Cleanup

Potential Site (in order of availability and proximity)	Ownership & Tax Lot	Availability for 2+ years?	Proximity to Thea Foss Waterway	Estimated Cost of Land (purchase or rental)	On-Site Rail or Close Proximity to Rail	Adequate Sediment Storage Adjacent to Pier?	Close Proximity to Rail Car Storage? (pull-through or siding/tail track)	Existing Useable Pier?	Deep Water Access, Suitable for Pier?	Sufficient Site Size for Likely Re-Use of Pier?	Substantial Environmental & Land Use Compatibility / Other Factors
(8) Atofina Chemical Factory – 2901 Taylor Way (Hylebos)	Elf Atochem North America	Not likely, Hylebos cleanup to use site in 2003	4.24 mi.	N/A	Yes	Probably	Yes	Yes	Yes	Yes	(1) Upland cleanup concluding; (2) Coordination with Hylebos cleanup, barge traffic.
(9) Jesse Engineering (Blair)	Port of Tacoma	No	1.70 mi.	N/A	No	No, direct barge to rail loading required	Yes	No; pier needs substantial rehabilitation	Yes	Probably	Unknown
(10) 605 Alexander Ave (Hylebos)	Pioneer Chloralkali Company	No	2.25 mi.	Amount uncertain	Yes	Yes 6acres	Yes	Yes	Yes	Unknown	(1)Coordination with Hylebos cleanup, barge traffic; (2) upland cleanup about to start.
(11) Pierce County Terminal (Blair)	Port of Tacoma	No	4.05 mi.	N/A	Yes	Uncertain due to pending development.	No	Yes	Yes	Probably	Port plans

III.C. Preferred Site

Based on the criteria outlined above, the City prepared a comparative evaluation of the 11 potentially available properties within Commencement Bay. Of those sites, only 5 were determined to be potentially available for the duration of the cleanup (the Burlington Northern/Wheeler-Osgood Waterway site; Simpson's Middle Waterway peninsula; Terminal 7 / Sitcum Waterway; the Joseph Simon/Hylebos site; and the Asarco site). Only two sites are expected to be available without complicated resolution of feasibility or acquisition issues (Middle Waterway peninsula and Hylebos/Simons property).

- The Asarco site was deemed inadequate based on a number of criteria, the foremost being the lack of rail access and potential conflicts/risks associated with Superfund cleanup activities there.

- The Wheeler-Osgood and Terminal 7 sites lack adequate sediment and container storage capacity. Both sites would require direct barge to rail transfer, a method that would substantially impact project schedule and costs.

- The Hylebos/Simon property lacks a pier but has sediment storage and container storage capacity. Adequate rail and rail storage could be constructed there. However, a major concern with the site is the potential for construction of transloading facilities to disturb recent cleanup efforts, specifically a gravel cap on soil contamination left in place. Potential habitat impacts and conflicts with concurrent waterway cleanup efforts are additional concerns. The Simon site also does not have available habitat mitigation lands that can be used for the Thea Foss remedy, if needed. The site's location on the Hylebos is not ideal, but alone does not preclude selection of this site.

- Simpson's property on the Middle Waterway peninsula lacks a pier, but has adequate backlands for sediment and/or rail car storage and would include free use of Simpson lands for habitat creation or enhancement. Conflicts with Simpson operations need to be coordinated; however, the City has already reached agreement with Simpson to ensure effective site coordination.

Based on the facility design requirements and siting criteria, Simpson's property on the Middle Waterway peninsula is the preferred site for the Thea Foss / Wheeler-Osgood Waterway sediment transloading facility.

The current use of the Middle Waterway peninsula site and adjacent properties is industrial urban shoreline. Use of this site as a transloading facility is compatible with surrounding land uses and is consistent with existing zoning and shoreline and land use plans and policies. By providing a transloading facility for sediment cleanup of nearby waterways, and providing for habitat restoration, the project would actively further the goals and policies of the state and local shoreline management programs. Reuse of the dock would meet shoreline management policies to promote water-dependent uses and the preference, expressed in Superfund policies and the CB/NT ROD for remedies that promote economic redevelopment.

IV. TRANSLOADING FACILITY PERFORMANCE SPECIFICATIONS

Performance specifications for a prospective sediment transloading facility suitable for the Thea Foss / Wheeler-Osgood Waterway upland disposal option, located at Simpson's Middle Waterway peninsula site, were developed in consideration of various project-specific and site-specific (locational) requirements. As outlined above, the transloading facility must include a suitably-sized and located dock with offloading crane/clamshell bucket, along with a minimum of 4 acres of adjacent uplands. Consistent with normal transloading practices in the region, the contractor will be provided the opportunity to bid the project using any one of a number of feasible combinations of transloading operations, potentially including transfer/temporary stockpiling of sediments onto the pier, transfer into a hopper/conveyor apparatus, or loading into containers prior to transfer to rail. Subsequent transfer operations may include the use of front-end loaders, top-pick container handling rigs, or other equipment as appropriate to achieve the required transloading throughput rate and provide environmental protection, among other requirements. Thus, performance specifications for this project must be flexible enough to address the anticipated range of various contractor approaches. During the bidding process, the contractors will be provided appropriate discretion in the specific design and operation of the transloading facility within these general performance specifications. The performance standards identified here and later in bid documents will ensure the final facility meets the project needs.

Summary of Performance Standards

The following summarizes performance standards for the transloading facility necessary for the upland disposal option:

Pier Location Criteria

- To address property owner requirements, the outer face of the pier must not extend waterward of the Simpson Tacoma Land Company property line, at water depths of at least -15 feet mean lower low water (MLLW);

- To address ESA and other habitat requirements as generally set forth in the CB/NT Clean Water Act determination, the inner face of the pier must be restricted as much as practicable waterward of the -4 foot MLLW intertidal or, if landward of -4 foot MLLW, to mitigate for impacts on intertidal habitat; and

- Given these site locational criteria, along with considerations for efficient transloading operations, the area available for construction of the transloading pier at Simpson's Middle Waterway peninsula site is depicted in Figure 2.

Pier Size and Loading Criteria

Sediment may be delivered to the pier in a variety of barge sizes ranging in length from approximately 200 to 350 feet. As discussed above, the average required daily throughput of sediment to the facility is approximately 4,000 cubic yards, which is equivalent to approximately 5,000 to 6,000 tons per day (average), with the potential for periodic exceedances of this average tonnage.

Several representative designs exist for offloading the sediment, including:

a. Clamming the raw sediment out on to the pier deck, transferring the sediment to adjacent upland areas using front-end loaders or equivalent, and final transfer into rail containers for load out;

b. Clamming the raw sediment into 34 ton containers, temporarily storing the containers on site as needed, and thereafter transferring them to the rail head using top-pick container handlers; and

c. Clamming into a conveyor system on deck and transporting to a staging yard on shore.

Representative design (a) will require multiple handling of the sediment, which may result in inefficiencies. However, as this method was successfully and cost-effectively employed during the recent East Waterway project (see above), it is a viable contractor option. Clamming the material out on to the deck may also require a somewhat larger deck surface than loading into containers. Representative designs (b) and (c) will likely be more efficient than design (a), with design (c) likely requiring a smaller deck area for the new pier, but higher potential for spillage. However, as discussed below, all three designs will require approximately the same deck surface area and loading requirements (see below), and thus approximately the same cost for construction.

Regardless of which design is ultimately selected and implemented by the contractor, the sediment transloading pier deck will be required to carry heavy loads. The distributed live load from sediment placed directly on deck is approximately 500 to 600 pounds per square foot (psf). Attempting to reduce these deck live loads under representative design (a) by spreading the sediment over a larger area while using smaller vehicles for transfer will result in a significant reduction in sediment transfer throughput per day, which would not be consistent with project requirements.

The top surface of the pier should be located at approximately +16 feet MLLW to match the shoreline contour. Placing the offshore face of the pier at the property line and the shore side trestle elevation at +16 feet MLLW, results in a pier that is up to approximately 180 feet from the loading point to the shoreline transition. A general schematic of representative design (a) is presented in Figure 3a, and results in a pier face length of roughly 210 feet, and a total deck area (including trestles) of approximately 21,900 ft^2.

Under representative design (b), each lined container would be loaded on the dock to its limit of approximately 34 tons. This then requires that approximately 150 to 180 containers will need to be filled and moved to the railhead each day to achieve the average sediment throughput rate of 5,000 to 6,000 tons per day. Filling the containers will be slower than moving them, so it would appropriate to provide a significant deck area for stockpiling containers for filling while the top-pick rigs are idle. Then, as the top-pick rigs begin work, this same stock pile of containers will act as a buffer to prevent unnecessary waiting time for the top-picks.

Assuming that a container can be filled within 7 to 8 minutes by clamming, and if only one clamshell is working on the barge, it will require 24 working hours to unload the 5,000 to 6,000 ton throughput. Therefore, to shorten the unload time, each barge will likely need a have two clamshell rigs working to achieve project requirements. The need for two rigs will mean that the length of the pier face accessible to the barge will need to be the same length as the barge cargo hold, or approximately 200 feet. The width should be approximately 75 feet to allow for on deck containers and top-pick operations. Thus, representative design (b) would require a total deck area (including trestles) of approximately 19,300 ft^2, as generally depicted on Figure 3b. Since the top-pick container carriers will have front axle loads of approximately 200,000 lbs when fully loaded, the deck design in this case must assume a distributed live load of roughly 600 psf.

Representative design (c), as depicted on Figure 3c, assumes that the offload clamshell is located on one end of the pier, and the hopper for feeding the conveyor system is located at the other end. Accommodating operations areas for handling debris from a grizzly mounted on the intake of the hopper,

and allowing for emergency vehicle access as required under local codes, the length at the pier face may be as short as approximately 185 feet, depending on the barge length calling at the pier. The width of the pier could be established at approximately 80 feet to allow for clamshell and hopper/conveyor base dimensions and one lane access for vehicular traffic back to shore. The distance from the pier face to shore will be approximately 185 feet, as for the other designs. This configuration does not require large distributed live loads (as do representative designs [a] and [b]), but will require specific supports for the conveyor, and vehicular loading equivalent to HS20-44. Design of the conveyor supports will require specific coordination with the conveyor supplier to assure that the support sizes, stiffness, loading capacities, and skirting requirements are compatible with effective conveyor operations. Thus, representative design (c) would require a total deck area (including trestles) of approximately 20,100 ft^2, as generally depicted on Figure 3c. The deck design in this case must assume a distributed live load of roughly 500 psf.

For the anticipated duration of the sediment transloading project, the pier and associated trestle could be constructed using either wood or steel-concrete pilings. Based on initial estimates, and considering all information presently available (excluding potential habitat mitigation costs), the wood and steel-concrete piling options for the transloading pier would have similar total project costs. However, given prospective deck area (19,300 to 21,900 ft^2) and loading (500 to 600 psf) requirements of all three representative designs, more than 450 wood pilings (approximately 6-feet-on-center) would be required for this application, compared to less than 100 steel-concrete piles (20-feet-on-center). Compared with steel-concrete, installation of wood pilings in this case would result in additional complications associated with construction and initial maintenance of the Middle Waterway remedial cap targeted for the general pier area, pier shading and fish passage. In addition, the steel-concrete option would allow more cost-effective reuse of the facility, which would further EPA policies on future reuse of Superfund remedy elements (see below) and would avoid the cost and environmental impact of the removal of 450 wood pilings and pier demolition. Thus, proposed performance standards for the transloading facility necessary for the upland disposal option include the following:

- The deck area of the constructed pier will range from approximately 19,300 to 21,900 ft^2 (including trestles), consistent with representative designs presented in Figure 3;
- The pier will be designed to accommodate distributed loads ranging from 500 to 600 psf; and
- Steel-concrete piling systems will be used for the pier structure.

Environmental Criteria/Best Management Practices (BMPs)

The transloading facility will be equipped with apron devices to prevent spillage between the barge and the offloading area on the pier, and beneath any conveyor devices that transfer sediment from the pier to the adjacent uplands. In order to prevent sediment spillage from the transloading pier, the pier and trestles will be equipped with a minimum 3-foot-high Ecology block / geotextile wall or equivalent. The entire surface of the pier, as well as the adjoining upland holding/operations area, will be paved to facilitate collection and management of sediments and runoff, and to prevent direct discharge into the Middle Waterway or other reaches of Commencement Bay.

All free water that accumulates within the barges and within the operations areas will be collected and treated as necessary to meet surface water discharge standards, prior to being discharged back into Commencement Bay. Collected water would include the following sources:

- Free water ponding in the arriving haul barges (which will be decanted by pumping prior to offloading of the dredged materials);

- Rainwater runoff from the entire operational area; and

- Water from wheel washing of out-bound transport vehicles.

All collected water will be routed by gravity drainage or pumping to a primary treatment system (e.g., pond) for gravity removal of settleable solids, or delivered directly into the City sewer, at the contractor's option. As appropriate, on-site treatment could be provided in relatively large (e.g., 16,000 gallon) Baker tanks or equivalent. In this case, gravity settling may be followed by filtration as needed to achieve surface water discharge standards set forth in Chapter 173-201A WAC. Additional special treatment steps are possible if needed for water quality compliance (e.g., flocculation and/or carbon adsorption), but are not anticipated at this time based on sediment elutriate testing, as summarized in the Design Analysis Report. Thus, proposed performance standards for the transloading facility necessary for the upland disposal option include the following:

- The entire surface of the pier, as well as the adjoining upland holding/operations area, will be paved (and bermed or outfitted with sumps as appropriate) to facilitate collection and management of sediments and runoff; and

- All collected water will be routed by gravity drainage or pumping to an on-site water treatment system, or delivered directly into the City sewer, at the contractor's option. Surface water discharges to the environment from the transloading operation area will be treated as necessary to comply with Washington State Surface Water Quality Standards (Chapter 173-201A WAC).

Table 2 presents a summary of performance standards for the sediment transloading facility at the Middle Waterway Peninsula site, and includes a comparison with the specifications for a log offloading facility, discussed in the following section.

Table 2. Summary of Performance Standards for Transloading and Anticipated Future Uses of Middle Waterway Peninsula Site Pier Structures

Representative Pier Design Option	Pier Face Length (ft)	Pier Width (ft)	Trestle Access Lanes	Deck Area, including trestles (ft^2)	Design Live Load (psf)	Structure Support Piling	Mooring Dolphins	Fendering Systems	Solids & Debris Containment	Water Collection and Treatment	Lighting
(a) Transloading sediment to pier stockpile (Figure 3a)	210	90	2	21,900	500 to 600	Steel-concrete	2	Potentially required	Yes	Yes	Yes
(b) Transloading sediment directly to containers (Figure 3b)	200	65+	2	19,300	600	Steel-concrete	2	Potentially required	Yes	Yes	Yes
(c) Transloading sediment via hopper and conveyor (Figure 3c)	185	77	2	20,100	500	Steel-concrete	2	Potentially required	Yes	Yes	Yes
Simpson facility reuse for log offloading (Figure 4)	175	80	2	19,300	150	Steel-concrete	2	Not required	Yes	No	Yes

V. COMPARISON OF TRANSLOADING AND REUSE SPECIFICATIONS

EPA has expressed concern that in designing a sediment off-loading pier, substantial elements in excess of those required to implement the remedy would be included in order to make the pier useable by Simpson after project completion. This section provides information on the design basis for a log offloading facility, so that the requirements for such a facility can be compared with the requirements of the sediment transloading facility.

By way of background, the re-use of Superfund sites, including re-use for commercial purposes, is encouraged under CERCLA policies and guidance, including the various Superfund Redevelopment Initiatives, and in decision documents for this site, including the CB/NT ROD and the Clean Water Act 404(b)(1) Evaluation. After sediment off-loading is complete, Simpson proposes to use the sediment transloading pier to off-load log barges for its mill. This re-use represents enhancement and maintenance of a historic, water-dependent business, one of the re-uses specifically supported at this site. It is important to note that Simpson would provide substantial acreage for any habitat enhancement associated with the cleanup project, thereby furthering the goals of this project and state and local shoreline management efforts.

A comparison of the requirements for a log off-loading pier and the performance standards for the proposed transloading facility indicates that the transloading facility would meet Simpson's log off-loading needs with little or no modification. As shown in Table 2, the transloading pier specifications for all critical design elements meet or exceed log off-loading needs. For instance, Simpson needs a pier at least 175 feet in length, with a pier deck/staging/trestle area of approximately 19,300 ft^2, and capable of handling average live loads of 150 psf. The proposed sediment transloading performance standards calls for a pier between 185 and 210 feet in length for pier deck/trestle area of between 19,300 and 21,900 ft^2, that is capable of handling live loads of between 500 and 600 psf. That the sediment off-loading pier is more than adequate for log off-loading requirements is not surprising given that, in order to meet project schedule needs, the sediment pier has been designed to handle high throughput requirements relative to other regional sediment off-loading facilities. More detailed design requirements for log off-loading are identified in Figure 4 and Appendix A to this Memorandum.

In sum, no elements of the transloading facility need be enhanced or improved based on its intended re-use as a log off-loading facility. However, to the extent design elements are identified that do exceed that required for the remedy, the City and/or Simpson would seek approval of those elements under the proper regulatory authorities, as addressed below.

Regulatory Review of Transloading Facility

The transloading facility described in this technical memorandum is required for, and is a necessary and integral component of the implementation of the upland disposal option for the Thea Foss / Wheeler-Osgood Waterway remedial action and would be located in the CB/NT Site. Consequently, regulatory review of the transloading facility specifications (as described above and as incorporated into the final bid specifications) would be the same as any other remedial design element.

Because the contractor will be providing a final design with its bid response, the final design will need to be reviewed by EPA, in consultation with other appropriate governmental entities, to confirm substantial consistency with the performance specifications including compliance with ARARs. As with other elements of the remedial design, it is our understanding that final habitat mitigation/restoration plans and ESA consultation will be concluded upon final review of the contractor submittals, as these submittals will be providing detailed operational and construction methods and timing.

As evaluated in this memorandum and appendix, the specifications for a commercial pier useable for log transloading involve lower weight loadings and containment requirements than are needed for the sediment transloading facility. Moorage and ancillary facilities for such a facility also appear to be the same or less than those necessary for a sediment transloading facility. At this time, no increases in size, footprint, structural support, or other facility design elements have been identified for future reuse of the pier by Simpson. Likely modifications involve removal of certain elements of the pier that would no longer be needed, rather than an expansion of the pier facility.

Should modifications for future reuse involve a material expansion of the facility, these could be authorized under CERCLA as "betterments" as long as these are identified in conjunction with the remedial design approval and Superfund monies are not used to fund them, or could be separately permitted through the appropriate permit process (e.g., shoreline substantial development permit for in-water and upland work within 200 feet of the shoreline, and JARPA Section 404/10, HPA and related permits for in-water work). Separate permitting would appear to be more appropriate if any expansion were identified after the Superfund remedial design and approval process has been completed.

APPENDIX A - SIMPSON DOCK SPECIFICATIONS

Simpson's future reuse requirements for a dock constructed within the Middle Waterway are based on anticipated log unloading operations from barges, as described below:

1. Logs arrive from Canada and Alaska on ocean going barges. Foss has a typical barge that is used for this service (Foss 343). The barge is 343' long and 76' wide. The deadweight tonnage is 6685LT and the gross weight tonnage is 3335LT. The usable length is 335', and the LOA is 343'. Total loaded displacement is 10,020 LT, and it draws 13'-4" of water. Lightship draft is 3'-9". To prevent damage to customer piers, the barge stand off the pier face 15' against floating camel bundles carried on board. The preferred call at a pier is for the barge to be stationary moored while unloading (Foss input). Simpson is willing to perhaps move the barge once during and offloading if that will help in reducing the size of the facility.

2. The barge is equipped with a crane that can move slowly along the cargo hold. The crane boom is quite long, so it can place log bundles at specified locations on the wharf. The facility owner can tailor the bundle laying plan to some extent.

3. Logs must be unloaded as quickly as possible to maintain operations and to minimize "extra" charges for delaying the barge turnaround. Each bundle is nominally 50' long, but some extend to 65' long due to shifting within the bundle. Each bundle weighs approximately 30 tons (60,000 lbs.) and is approximately 8 to 9 feet in diameter. Using these data, the average distributed deck live load is approximately 150 psf. Although it is not intended that logs are stored on deck, some consideration for this storage load (partial deck area) should be included in the lateral load analysis.

4. Allowance must be given for offloading a fully loaded barge virtually at any time and at all but the most extreme low tides. This in turn dictates that the barge needs to be positioned to allow say 3' of water under the keel at some minus tides, which in turn suggests that the barge should be moored near the –20 foot bathymetric line.

5. To minimize offloading delays when a large barge is at berth, Simpson intends to use two (2) Wagner L90 log loaders to remove the logs. These are heavy vehicles (approximately 120,000 lbs.), and their axle loads are high when carrying a 60,000 lb log bundle. The L90's will drive on the pier facing the water, pick up a log bundle, and back off of the pier (backing off provides better visibility when the bundle is carried). The L90's will operate in separate "lanes" for safety. Each lane needs to be approximately 72' wide to allow for the 65' "shifted" log bundle. Alternatively, each of the trestles can be much narrower if the L90 log loaders can operate efficiently while raising the log bundles over the traffic barrier to a height of say 5' above the deck. In that case, the trestle width can reduce to say 30' maximum.

6. To make sure that the L90's can keep pace with the barge crane, there is a need to have some deck space to provide a small 6 to 8 bundle "stockpile" from which the L90's draw.

7. The top surface of the pier should closely match the shoreline contour at Elevation +16'. Studies of the bathymetric data for the Middle Waterway suggest that the distance from the +16' elevation to the –20' bathymetric line is approximately 180 feet. Deducting the width of the floating log camels (15') and the pier fender system (3') indicates that the structure may be 165 feet long perpendicular to the shoreline.

8. Allowing for the two 72 foot L90 lanes widths and a small stockpile area on the pier, and considering access areas, the width of the pier at the bullrail would be approximately 175'.

9. Should the pier be configured in a "marginal wharf" arrangement wherein two trestles access an 175' long apron, the width of the apron would need to be approximately 78'. This width would allow for 65' bundles, an 11' wide small vehicle driving lane parallel to the bundle laydown area, and two 1' wide bullrails.

10. Mooring dolphins and a fender system are also required.

A schematic plan arrangement of the log transfer pier is provided in Figure 4.

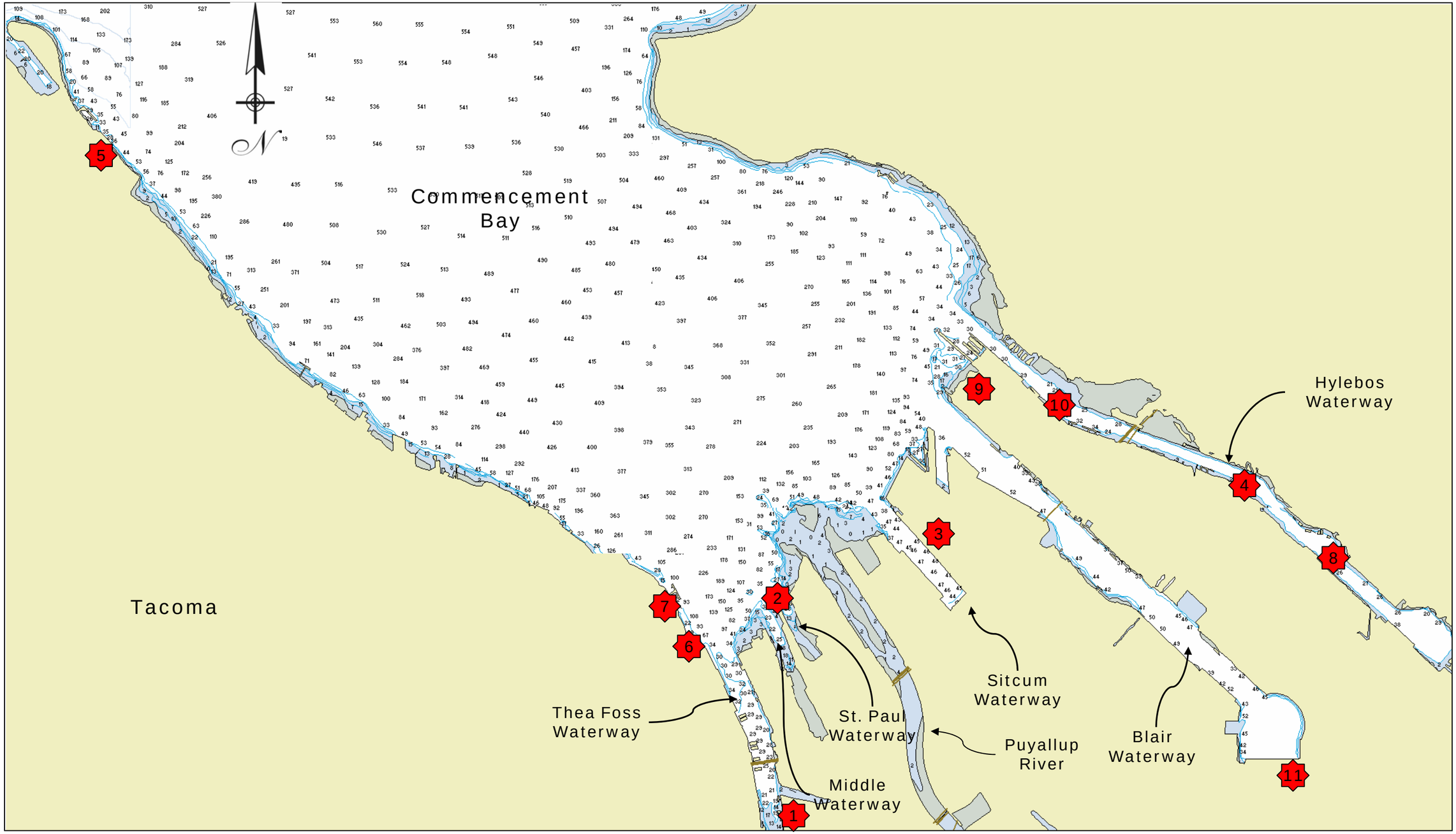
Commencement Bay
Tacoma
Hylebos Waterway
Sitcum Waterway
Blair Waterway
Puyallup River
St. Paul Waterway
Middle Waterway
Thea Foss Waterway
1
2
3
4
5
6
7
8
9
10
11

Figure 1

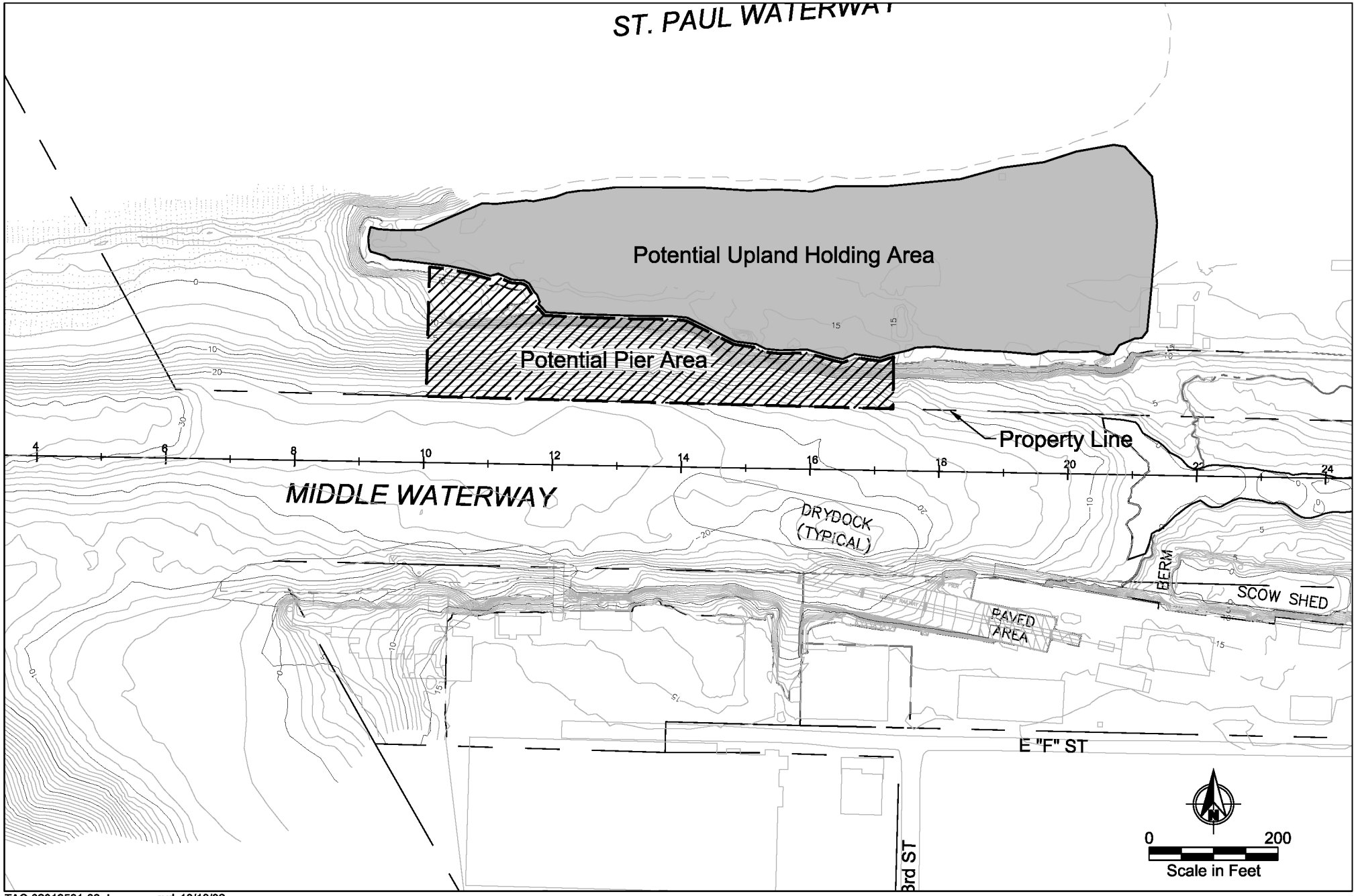

TAC-02019501-03.dwg cvd 10/18/02

ANCHOR ENVIRONMENTAL, L.L.C.

Figure 2
Middle Waterway Peninsula
Potential Pier and Upland Holding Areas

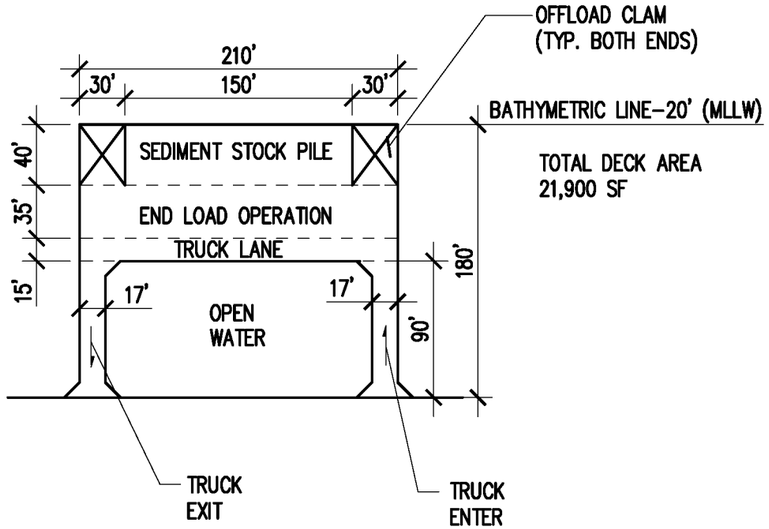

NOTE:

DECK DESIGN FOR 500-600 psf LIVE LOAD
PLUS END LOADER WITH BUCKET AND HS20-44
DECK ELEVATION +16.0' (MLLW)

REPRESENTATIVE DESIGN A - DECK STORAGE TRANSFER

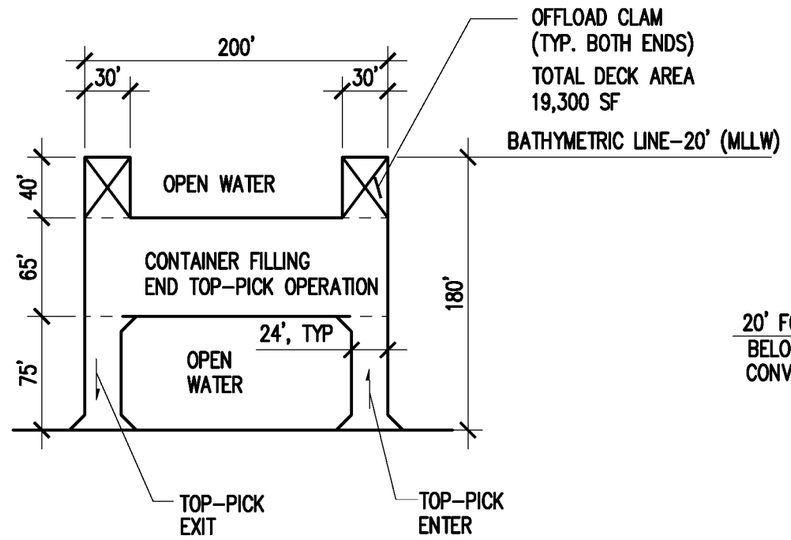

NOTE:

EACH CONTAINER HAS A FOOT PRINT OF 20'x8'
EMPTY WEIGHT = 7,000 LBS
CAPACITY = 68,000 LBS = 34 TON
TOTAL = 75,000 LBS

DECK DESIGN FOR 600 psf LIVE LOAD
PLUS TOP-PICK FRONT AXLE LOAD = 200,000 LBS
DECK ELEVATION +16.0' (MLLW)

REPRESENTATIVE DESIGN B - CONTAINER/TOP-PICK TRANSFER

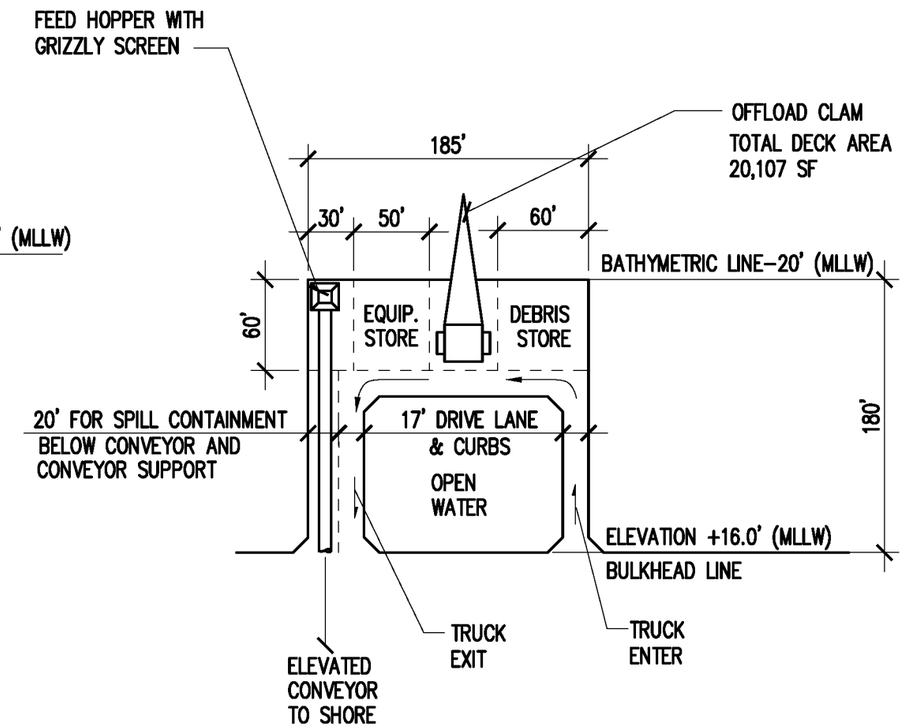

NOTE:

DECK LIVE LOAD = 500 psf (EQUIPMENT & DEBRIS)
HS20-44 TRUCKS, FORKLIFTS, END LOADERS

REPRESENTATIVE DESIGN C - CONVEYOR TRANSFER

kpff Consulting Engineers
711 COURT "A", Suite 202
Tacoma, Washington 98402
(253) 396-0150 Fax (253) 396-0162

FIGURE 3

SEDIMENT TRANSLOADING PIER OPTIONS

TAC-02019501-02.dwg 10/18/02

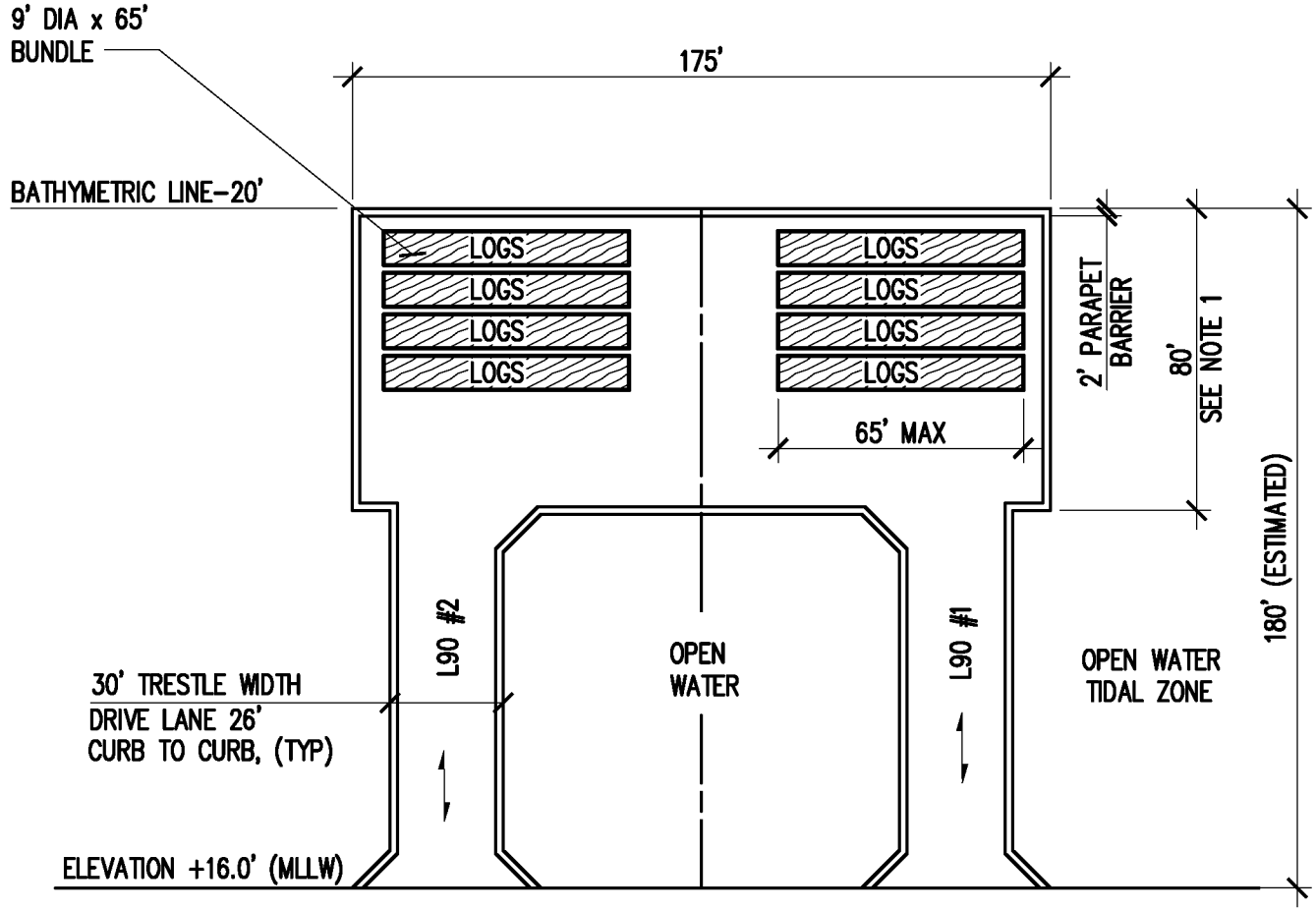

NOTES:

1. 80' WIDTH ALLOWS FOR 2' PARAPET AT BULLRAIL, 66 FEET OF LOG LAYDOWN, AND AN 11' SMALL TRUCK ACCESS.
2. ALSO NEED MOORING DOLPHINS (2) AND FENDER SYSTEMS, AND GANGWAYS TO MOORING DOLPHINS
3. TOTAL ESTIMATED DECK AREA IS APPROXIMATELY 19,300 SF

kpff Consulting Engineers
711 COURT "A", Suite 202
Tacoma, Washington 98402
(253) 396-0150 Fax (253) 396-0162

FIGURE 4

SIMPSON LOG TRANSFER FACILITY

PART II: TECHNICAL MEMORANDUM
UPLAND DISPOSAL FACILITY DESIGN AND HABITAT CONSIDERATIONS

PART II: TECHNICAL MEMORANDUM
UPLAND DISPOSAL FACILITY DESIGN AND DISPOSAL OPTION HABITAT CONSIDERATIONS

1.0 INTRODUCTION

The following expands on the analyses presented in Part I of this appendix and includes a conceptual pier design, future design activities to be completed, and an ARARs analysis for the structure. Habitat considerations and affirmative conservation measures for the Upland Disposal Option are discussed in Section 6 of the DAR. These measures will be taken to meet the EPA objective that the remedial actions contribute to the recovery of salmonids listed as threatened under the Endangered Species Act (ESA) (see ESD page 14). The ARARs analysis presented herein, along with the habitat considerations presented in Section 6, also address future reuse of the pier to enable EPA to fully review the role of this structure for sediment cleanup in the Thea Foss Waterway, as well as future reuse as a marine cargo pier.

EPA will conduct a public notification process beginning in early February in which the public will be provided thirty days in which to review and comment.

Construction of the transloading pier would normally require a Section 404 CWA permit issued by the Corps of Engineers. Such a permit is required for any project that will discharge dredged or fill material into the waters of the United States. The Corps decides whether to issue a 404 permit based upon its 404(b)(1) analysis. CERCLA provides an exemption for cleanups and, consequently, a permit is not required in this case. However CERCLA still requires that all components of the remedial action satisfy the substantive requirements of applicable or relevant and appropriate requirements (ARARs), including section 404 of the CWA. Under the CERCLA process, EPA conducts the same 404(b)(1) analysis to determine whether the project will comply with he substantive requirements of Section 404. To do so, the project must be a practicable alternative (available, cost-effective and technologically and logistically feasible) with acceptable adverse impacts (unavoidable, adequately mitigated impacts that will not result in significant degradation of aquatic habitat). As addressed in the document, the project will meet these requirements.

2.0 TRANSLOADING PIER DESIGN

The design of the sediment transloading pier will be completed with enough detail and specifications to meet the objectives in Section 2.1 and to a level that represents roughly a 35 percent design level. At this level there will be enough detail to allow contractors to bid the structure and adjoining facilities on a unit-price basis. It is anticipated that a line item, common to all bidders, will be included for design changes beyond those presented in the bid documents. This line item would have a common dollar amount established by the City to cover potential changes that could not be anticipated at the time of bidding, possibly in the range of 15 to 20 percent of the estimated total cost for the structure. Drawings will include details of the piles, deck panels, and cast-in-place concrete outlines with anticipated reinforcing and deck panel connections. Approximately 30 to 35 design drawings (civil, structural, and electrical) will be added to the existing documents in February 2003 for bidding. In general, the bid documents will present a reasonably detailed picture of the structure. However, not all design-related analysis and details will be completed. Detail will be based on preliminary analysis and experience gained from the design of similar structures within the Puget Sound region.

Based on the bids received by the Contractor in April 2003, the City will select the disposal option to be implemented. If the Upland Disposal Option is selected, the City would then complete the pier design, as shown on Figure V-1. The final pier design would be provided to EPA in June. EPA would then review the final pier design along with other contractor submittals in June. The Contractor would mobilize for work in mid-July.

2.1 Design Criteria

General design criteria for the sediment transloading pier were developed and included in Part I of this appendix. Since that time, additional design criteria were developed with the assistance of the landowner, land-based equipment operators, and barge operators. The following presents the criteria used for the design.

Technical design criteria presented in Section 4 of Part I of this appendix are summarized below:

- To address property owner requirements, the outer face of the pier must not extend waterward of the Simpson Tacoma Land Company property line, and must be at water depths of at least 15 feet below mean lower low water (MLLW);

- To address ESA and other habitat requirements as generally set forth in the CB/NT Clean Water Act determination, the inner face of the pier must be restricted as much as practicable waterward of the elevation –4 feet MLLW intertidal or, if landward of elevation –4 feet MLLW, to limit impacts on intertidal habitat which would require mitigation;

- Sediment may be delivered to the pier in a variety of barge sizes ranging in length from approximately 200 to 350 feet. To accommodate maximum throughput, the deck area of the constructed pier will range from approximately 19,300 to 21,900 ft^2 (including trestles);

- Regardless of the method of unloading sediments from the barges, the pier deck will be required to carry heavy loads as the distributed live load from sediment placed directly on deck is approximately 500 to 600 pounds per square foot (psf); and

- Steel-concrete piling systems will be used for the pier structure.

In addition, to the technical design criteria, environmental criteria or Best Management Practices (BMPs) were also identified in Section 4 of Part I of this appendix and include:

- Apron devices will be installed to prevent spillage and contain liquids between the barge and the offloading area on the pier, and beneath any conveyor devices that transfer sediment from the pier to the adjacent uplands.

- The pier and trestles will be equipped with a minimum 3-foot-high ecology blocks/geotextile wall or equivalent.

- The entire surface of the pier, as well as the adjoining upland holding/operations area, will be paved to facilitate collection and management of sediments and runoff, and to prevent direct discharge into the Middle Waterway or other reaches of Commencement Bay.

- All free water that accumulates within the barges and operational areas will be collected, treated, and discharged as necessary to meet surface water and wastewater discharge standards per Section 401 of the Clean Water Act (CWA) (see Section 4.1.1.1). Requirements for the handling of ponding/effluent water are discussed in Section 4.1.1.1 herein and in Section 4 of Part I of this appendix. Collected waters which could be discharged to the City's POTW will need to meet the pre-treatment requirements per

Chapter 12.08, Sewage Disposal, of the Tacoma Municipal Code. These requirements will be included in the project plans and specifications.

Additional design criteria to supplement Appendix V include:

- The deck, roughly 20,000 square feet of surface area, will be designed to support relatively large crawler cranes that would most likely be used to transfer the sediments from loaded barges to containers. This will require that deck live loads of 600 psf be included in the design criteria.

- The structure will be designed utilizing a plumb pile configuration using enough piles of adequate size to resist the anticipated vertical, lateral, and seismic loads. The design concept for vertical loads is that loads will be distributed through the concrete pavement to the deck panels, deck panels to the pile caps, pile caps to the piles, and piles to the soil in friction and end bearing. Horizontal loads, including seismic forces and barge berthing impacts, will be transmitted through the deck diaphragm to the piles which, in turn, will be transmitted to the resisting soil.

- Berthing loads for sediment barges will take into consideration a barge with an approximate loaded displacement of 10,000 long tons (LT) approaching at a velocity of 1 knot at an approach angle of 10 degrees or less. Berthing loads will initially be absorbed through a fender system that will be in place along the length of the face of the pier.

- At each end of the pier there will be a mooring dolphin, 50 to 75 feet beyond the ends of the pier, that will be used for mooring line tie-up during the off-loading operations. These dolphins will be connected to the pier by walkways.

2.2 Geotechnical Considerations

The explorations advanced on the St. Paul/Middle Waterways peninsula show up to 130 feet or more of alluvial deposits, consisting of alternating layers of very soft to stiff Silt, and very loose to medium dense Sand. While the majority of the explorations did not extend into underlying, more competent material, two additional deep explorations conduct in December 2002 were advanced, in opposite corners of the proposed footprint of the pier. One exploration was advanced from the landside, while the other was advanced offshore from a barge. A field geologist/engineer was on site for the duration of the exploration and observed the drilling and sampling procedure, classified the samples collected, and submitted selected samples for more thorough testing and

classification. The results from the explorations and laboratory tests were used to determine the competency, location, and elevation of the bearing layer. Then, using the structural loads developed from the design criteria, the pile type(s) and corresponding lengths were evaluated. Part III of this appendix presents the results of the exploration program, laboratory testing, and geotechnical analyses.

For construction of the pier, the hammer equipment to be used during pile installation needs to satisfy two main criteria – the impact energy needs to be large enough, such that all piles can reach their determined tip elevation, but not too large, such that there is a major risk to overstress and damage the piles during installation. The pile installation section of the Project Plans and Specifications will include the type of piles to be installed, the number of piles, and their lengths. A conventional pile installation method to be used will be described, in addition to a minimum rated hammer energy for the pile installation equipment. Once a pile installation hammer has been proposed by the Contractor, a pile driving analysis will be performed to verify that all piles can reach their determined length and capacity, without being damaged during installation.

In addition, excavation at the base of the existing slope along the Middle Waterway will be performed as part of the remediation activities by the Middle Waterway Action Committee (MWAC). The short- and long-term stability of the slope in light of the adjacent excavation was analyzed using MWAC's 90 percent design. Coordination with MWAC on the sequence of work and recommendations for the long-term right of entry will be considered for the design.

2.3 Structural Detail

The transloading sediment pier will have a surface area of roughly 20,000 square feet as shown on Figure V-2. This will be comprised of an outer apron and two trestles connected to shore. The apron, where the transloading operations will take place, will be roughly 80 feet wide by 206 feet long, and the trestles will be roughly 60 feet long by 30 feet wide.

The structure will incorporate pre-cast concrete piles and deck panels to the greatest extent possible. Figures V-2 and V-3 show a plan view of the structure and typical cross section, respectively. The shorter piles required in the trestle areas may be steel pipe piles, particularly at or near the bulkhead. It is anticipated that all piles will be driven plumb. Cast-in-place concrete will be used to make the deck area a monolithic diaphragm. The deck area and trestle

surfaces will be paved so that positive drainage occurs toward the bulkhead areas where runoff will be collected in a drainage system that will allow for pretreatment before being released to the adjoining waterway (see Section 4.1.1.1). Around the perimeter of the pier and trestles there will be a cast-in-place concrete curb roughly 2 feet wide by 1 foot high. Included along the pier face will be a fendering system for the berthing of loaded barges. Pier lighting from shore and power service at the outer bullrail will be installed. Fire protection will be provided on the shore side of the pier.

Adjacent to the pier structure will be a paved storage area with a storm/ sediment water drainage system that will either be tied to the existing Simpson settling ponds or discharged directly to the Middle Waterway. In either scenario, the water will be pretreated before being released so that water quality standards are met during all phases of operation (see Section 4.1.1.1). The paved storage area will be a minimum of 2 acres, but the Contractor will be allowed to pave additional acreage, estimated at 2 acres (for a total of 4 acres of storage) to assist in his operations. This paved area will have high mast lighting to allow for 24-hour, 7-day-a-week operations. The pavement section will be designed to accommodate high wheel loads in the range of 20,000 psf.

Supporting the storage area and pier will be rail service so loaded containers can be placed directly onto rail cars and shipped to the designated upland disposal facility. This rail service will be designed to meet the operating railroads minimum standards, which may permit the use of second-hand materials. It is anticipated that there will be two tracks that run from the loading area near the pier to within 200 feet of the 11th Street right of way. Included will be switches as necessary to allow for car movements while trains are being built up. It is anticipated that the rail will be a minimum of 115 pounds per yard and ties will be treated wood spaced roughly 20 inches on center. Switches/turnouts will be of a size as dictated by the operating railroad.

2.4 Sediment Transfer Operations

Unloading Operations. It is anticipated that loaded barges will be delivered to the pier face using contractor-furnished tugs or pusher boats. Barges will be relatively large, 200 to 350 feet in length, with loaded displacements in the range of 10,000 LT. Once berthed, it is anticipated that the sediment will be off loaded using a relatively large crawler crane with a clamshell bucket in the range of 8 to 10 cubic yards. After material is removed from the barge, there are several methods the Contractor may select to move the sediment to the rail cars:

- Sediments may be loaded directly into containers on the pier, which once loaded would be transported, via rubber-tired container handling equipment to the rail yard and placed onto waiting rail cars.

- Sediments may be placed directly on the pier deck and then transported via end loader to the paved storage area where they will then be loaded into containers and subsequently placed onto waiting rail cars.

- The Contractor may set up a conveyor system on the pier and load directly from the barges, via clamshell bucket, into the conveyor system that, in turn, would transport the materials to the paved storage area. Once at the storage area, the sediments would be loaded into containers and subsequently placed onto waiting rail cars.

Debris. It is anticipated that debris will be transported to the pier area along with the dredged sediments. This debris, which may include treated wood materials, concrete rubble, and other metallic materials unearthed during the course of the work, will need to be handled during the off-loading operation. This material may require a separate area be designated on the pier deck to separate it from the dredged sediments. This would be particularly true if the Contractor elects to move the material from the pier to the paved storage area via a conveyor system. If the debris is of a size that will fit directly into the containers, no further processing will be required. If the debris is too large to permit direct loading into the containers, it will be broken or cut up into manageable pieces that would permit loading into the containers.

Effluent Water Handling. During sediment off-loading operations, stormwater runoff from the pier and pavement, in addition to water generated from sediment handling operations will be collected and treated in compliance with Section 401 of the CWA (see Section 4.1.1.1). For waters disposed of in the City's POTW, pre-treatment will be required per Chapter 12.08 of the Tacoma Municipal Code.

2.5 Future Reuse

At such time as the transloading pier is no longer necessary to implement the Thea Foss Waterway remedy, the pier will be reused by the property owner (Simpson) as a marine cargo pier. Future uses are planned to include log barge unloading, forest products shipping, temporary moorage, and marine barge commerce typical of Puget Sound and west coast marine terminals. Given its suitability for the Thea Foss Waterway project, including rail and highway access and positive containment built into the pier design (see Sections 2.1 through

2.3), the facility may also be reused for other marine sediment transloading activities.

The pier itself is planned to remain as constructed for ongoing uses described above, other than the potential removal of ancillary equipment and facilities unique to the contractor's final sediment handling plan. The pier facility needed for implementation of the Thea Foss Waterway remedial action for Upland Disposal Option would suffice in size and need little or no modification for future reuse. The principal vessel use after the remedial action is expected to be barge(s) based on the size, design, and physical limitations of the transloading pier.

As noted in Section 2.1, to avoid the potential for short- or long-term navigational impacts, the pier is not located in a designated federal navigation channel. It is located on Simpson property and would not extend into the navigable waterway area or onto state-owned aquatic lands.

The upland area adjacent to the pier will serve as a cargo staging and handling area. Because of the narrowness of the north end of Middle Waterway peninsula, the use of this entire area as shown is necessary for large vehicular turning movements and temporary storage of off-loaded cargoes. Temporary storage is necessary because the pier has limited deck space, primarily because of two reasons: (1) the dock is smaller than dock designs previously considered (Anchor, Parametrix, et al. 1998); and (2) to protect habitat, the pier is separated from the shoreline (see discussion on avoidance, minimization, and conservation measures in Section 6 of the DAR). Temporary storage on the north end of the peninsula is necessary to avoid blockage and conflicts with north-south multimodal (e.g., track/rail) movements on the narrow peninsula from the pier southward to East 11th Street.

This area is comprised of pervious and impervious surfaces. Impervious or paved areas will be equipped with a stormwater collection system delivering stormwater to the existing Tacoma saw mill stormwater system. When the remedial work and associated water quality management for handling Thea Foss Waterway dredged sediments under the Thea Foss Waterway Consent Decree is completed, the existing facility stormwater plan will be updated by Simpson to reflect this activity. The Tacoma saw mill is a new $80 million facility with an extensive stormwater management system.

The relocated saw mill loghaul out facility from St. Paul Waterway shown on the CDF plans (Sheet 57, Drawing C-42) would not be constructed on the Middle Waterway if the transloading pier for an Upland Disposal Option is built. Log

haul out on Middle Waterway for the Simpson saw mill or other end users would be via the new pier. During such activities a log barge, equipped with a crane on board the barge, will moor at the pier. The crane will lift unbroken log bundles from the barge and place them on the pier deck. As described in Section 2.3, the pier deck and the ramps to the shoreline are concrete with positive containment. Log loaders will haul the unbroken bundles from the pier deck and either deliver them directly to the existing saw mill log yard or place them in a temporary storage area (surge area) on the upland area adjacent to the pier. Once the barge is unloaded all logs in the surge area will be delivered to the sawmill log yard or other end users for processing.

The pier and upland surge will be equipped with positive containment (curbs, ecology blocks, etc.) to prevent any bark or wood debris that may fall off the log bundles from entering the waters of Commencement Bay or the stormwater collection system. Bark and wood accumulations will be removed from the pier and surge area and delivered to the sawmill hog for grinding into beauty bark or wood fuel.

As part of the long-term habitat mitigation/restoration actions described in Section 3.3 for the pier facility, blackberries and other invasive vegetation will be removed and the upland slope of the restored northwest shoreline edge of the peninsula will be planted with native transition vegetation (e.g., willow) to provide habitat between the upland and enlarged Middle Waterway habitat corridor.

The City's comprehensive plan and shoreline management master program designates this site as Port Industrial Area, High Intensity Development Tier 1 - Primary Growth Area and "M-3 - Port Industrial" for heavy industry. The shoreline and adjacent area are designated as "urban shoreline" and included in the "S-10 – Port Industrial" shoreline district, where piers and marine commerce are permitted uses. Ongoing use of the transloading facility does not involve any specific additional land use, shoreline, or zoning requirements beyond those that would apply as ARARs to the development of the sediment transloading facility.

The above reuse is similar to that originally discussed and shown in the Simpson Tacoma Kraft Company, St. Paul Peninsula Environmental Improvement and Industrial Redevelopment Project Analysis (Anchor, Parametrix, et al. 1998) and in the habitat planning process for the CDF remedy (Thea Foss Round 3 Data Evaluation and Pre-Remedial Design Evaluation, Appendix Z (Parametrix 2000) and EPA 404(b)(1) evaluation (EPA 2000). As discussed in Section 3.3, the

above proposed future reuse would occur at a pier substantially smaller in size than previously considered.

3.0 HABITAT CONSIDERATIONS

Section 6 of the DAR describes the habitat implications of remediation within the waterway, as well as the unavoidable impacts associated with the Upland Disposal Option and the CDF Disposal Option which includes the compensatory mitigation that would accompany selection of each option. Finally, the mitigation balance that would result under each option is described along with the manner and extent to which each option would contribute to the restoration of habitat for salmonids listed as threatened under the ESA and for other marine resources and wildlife.

4.0 ARARS ANALYSIS FOR CONSTRUCTION AND CONTINUED USE OF TRANSLOADING PIER

If, through the bidding process, the City selects disposal at an upland disposal facility as the method by which contaminated sediments dredged from the Thea Foss and Wheeler-Osgood Waterways will be disposed of, the sediment transloading pier would be designed and constructed as explained in Section 2 and Part I of this appendix. The sediment transloading pier would be used to move dredged sediments from barges to rail cars for as long as it takes to complete dredging at the site, currently anticipated to be approximately 2 to 3 years. After dredging is completed, and the pier is no longer needed for remedial activity, Simpson will reuse the pier. Reuse can include log barge loading and unloading, forest products shipping, temporary moorage, and marine barge commerce as described in Section 2.4.

The location and design specifications, including pier footprint, and potential environmental impacts of the pier necessary for Simpson's post-remedial action use of the pier are either identical to or less than those necessary for the pier when it is used for transloading dredged sediments. Specifically, a commercial pier usable for log transloading requires reduced weight loadings and less containment than are needed for the sediment transloading facility (see Part I of this appendix). Moorage and ancillary facilities for such a facility also appear to be the same or less than those necessary for a sediment transloading facility. No increases in size, footprint, structural support, or other facility design elements have been identified for future reuse of the pier by Simpson. Likely modifications involve removal of certain elements of the pier (e.g., extensions for

clamshells) that would no longer be needed, rather than an expansion of the pier facility. Reuse of the pier as a cargo handling pier would pose potentially less, and certainly not more, impact on water quality and fish than use of the pier for sediment transloading.

4.1 ARARs

Applicable or relevant and appropriate requirements (ARARs) include promulgated environmental criteria, standards, and other requirements as identified in the 1989 ROD. The Endangered Species Act (ESA) was added as an ARAR in the ESD. More recently the amended Fishery Conservation and Management Act has been added as an ARAR. ARARs for the Thea Foss and Wheeler-Osgood Waterway remedial action are listed in Table 10-2 of the Round 3 Data and Pre-Remedial Design Report, Thea Foss and Wheeler-Osgood Waterways Remediation Project, September 30, 1999, and Table 1 in the Permitting and Site Access Plan Thea Foss and Wheeler-Osgood Waterways Remediation Project (PSAP), November 1, 2002. These tables were reviewed and ARARs applicable to the construction and operation of the sediment transloading pier and reuse of the pier by Simpson are discussed in this section.

The following discussion provides a summary of the substantive requirements that apply to construction and operation of the sediment transloading pier and reuse by Simpson as a cargo handling pier. [For a more extensive discussion of the substantive requirements of each ARAR, consult Section 10 of the Round 3 Report (September 30, 1999)]. As discussed below, the sediment transloading pier and Simpson reuse of the pier will meet these substantive requirements.

4.1.1 Federal ARARs

4.1.1.1 Clean Water Act (CWA)

Section 401; 40 CFR § 403 et seq. Section 401 of the CWA requires that discharges resulting from construction and operation of the sediment transloading facility comply with several provisions of the CWA, including §s 301, 302, 303, 306 and 307. Section 401(d) also requires that the sediment transloading facility meet "other appropriate requirements of state law." In this context, where several of these enumerated sections of the CWA are inapplicable the primary requirement imposed by §401 is that discharges resulting from construction and operation of the sediment transloading facility comply with state water quality standards (Chapter 173-201A WAC). The Puyallup Tribe has adopted the state water quality standards as interim tribal water quality standards, Puyallup Water Quality Program (Puyallup Tribal

Council Resolution No. 151288C). As such, the Tribal Water Quality Standards impose the same requirements as do the state Water Quality Standards.

There are four discharges anticipated to result from construction and operation of the sediment transloading facility: (1) discharges of fill material associated with construction of the facility (which is discussed below in the section addressing §404); (2) discharges of non-contact stormwater generated on the transloading pier and/or the upland sediment storage area; (3) stormwater that has been in contact with dredged sediments generated on the transloading pier or the adjacent upland storage area; and (4) water that partitions from dredged sediments either during regular handling or as a result of a spill.

Non-contact stormwater will be collected and routed to Simpson's existing, permitted stormwater detention facilities adjacent to the transloading pier. These detention facilities are managed in accordance with Simpson's NPDES permit and various BMPs will be utilized to ensure that discharges from these detention facilities will meet water quality standards.

With regard to contact stormwater and partition water, these will be collected and treated on site. After treatment, the wastewater will discharged into the Middle Waterway. The BMPs and/or treatment processes that will be utilized to treat these wastewaters will likely involve detention and settlement. The City staff knowledgeable about water quality issues will work closely with EPA and the Contractor to develop final wastewater treatment design if the Upland Disposal Option is selected.

Sediment Transloading Facility. The following measures will be taken during construction and operation of the sediment transloading pier to assist in meeting state water quality standards:

- The transloading facility will be equipped with apron devices to prevent spillage between the barge and off-loading area on the pier, and beneath any conveyor devices that transfer sediment from the pier to the adjacent uplands;

- The pier and trestles will be equipped with a minimum 3-foot-high ecology block/geotextile wall or equivalent to prevent sediment spillage from the pier;

- The entire surface of the pier, as well as adjoining upland holding/operation area, will be paved to facilitate collection and management of sediments and

runoff, and to prevent direct discharge into the Middle Waterway or other reaches of Commencement Bay;

- All free water that accumulates in the arriving haul barges, rainfall runoff from the entire operational area, and water from wheel washing of out-bound trucks will be collected and routed to an on-site water treatment system or delivered directly to the City sewer. Any effluent waters delivered to the City's POTW will be pre-treated as required by 40 CFR § 403 et seq. and Chapter 12.08 of the Tacoma Municipal Code. Surface water discharges to the environment from the transloading operational area will be treated as necessary to comply with state water quality standards (Chapter 173-201A WAC).

Simpson Reuse of Pier. When Simpson reuses the pier, the pier itself will remain as constructed for sediment transloading, other than possible removal of ancillary equipment. The upland area adjacent to the pier is currently comprised of both pervious and impervious surfaces but shall be substantially, if not completely paved in conjunction with the sediment offloading facility construction. Stormwater collected from the paved areas will be delivered to the stormwater management system at the new Tacoma sawmill facility. See Section 2.

Section 404 and 404(b)(1) Guidelines. Section 404 of the CWA and associated guidelines, 40 CFR Section 230.10, regulate the discharge of dredged or fill material into waters of the United States. Because the pier would be used to dispose of the dredged sediments, it is part of the remedial action and subject to Section 404 requirements. In addition, in constructing the pier itself, material will be dredged to install the pilings and unavoidably at least a small amount will be discharged into the water.

Under Section 404, potential impacts of a project must be avoided to the maximum extent practicable, and remaining impacts must be mitigated to the extent appropriate and practicable by taking steps to minimize impacts and finally compensate for aquatic resource values. See, Memorandum of Agreement Between the Environmental Protection Agency and the Department of the Army Concerning the Determination of Mitigation under the Clean Water Act Section 404(b)(1) Guidelines (EPA/DA MOA)(February 6, 1990).

To comply with the 404(b)(1) Guidelines, an action must be a practicable alternative with acceptable adverse impacts. To be considered a practicable alternative, an option must be (1) available, (2) cost-effective, and (3) technically and logistically feasible "in light of overall project purposes." 40 CFR Section

230.10(2). To be acceptable, adverse impacts must be unavoidable, not result in significant degradation of aquatic habitat, and must be adequately mitigated. The pier is a practicable alternative with acceptable adverse impacts.

The pier meets the environmental and economic purpose and needs of the City and Simpson. The pier is a component of an option for upland disposal of contaminated sediments. Disposal of contaminated sediments is necessary to complete remediation of the Thea Foss and Wheeler-Osgood Waterways under the Consent Decree. Due to high project costs, the City needs to bid multiple disposal options including the CDF and Upland Disposal. The pier would also satisfy Simpson's need to have logs delivered next to its sawmill.

EPA previously determined that upland disposal of contaminated sediments from portions of the CB/NT Superfund Site at a regional landfill is a practicable alternative. In 2000, EPA conducted a 404(b)(1) analysis of potential disposal sites for contaminated sediments dredged from Commencement Bay. The analysis included the St. Paul Combined Disposal Facility (CDF) and Upland Disposal at a regional landfill. *See,* EPA Memorandum, Clean Water Act Section 404(b)(1) Analysis for Commencement Bay Nearshore/Tideflats Superfund Site, Tacoma, Washington (July 31, 2000)(EPA 404(b)(1) Analysis). EPA concluded that both the St. Paul Fill and a regional landfill are available, feasible and cost-effective and selected them as practicable alternative disposal sites for portions of the CB/NT Superfund Site. EPA 404(b) Analysis p. 16.

As a component of an upland disposal option, it must be shown that the pier at the Simpson property is a practicable alternative. In the Sediment Transloading Facility Siting Evaluation (Part I of this appendix), it was determined that this location was available, cost-effective, and technologically and logistically feasible. This site provides an unparalleled combination of location, adequate upland space and free land and location of a pier at this site is a practicable alternative.

The Guidelines implement the requirement to avoid impacts by allowing permit issuance only for the practicable alternative with the least adverse impacts on the aquatic ecosystem. 40 CFR Section 230.10(a). Compensatory mitigation is not considered in evaluating the least environmentally damaging practicable alternative. See, EPA/DA MOA. Selection of the upland option, including construction and operation of the pier would avoid the impacts that would result from the CDF fill, including the loss of 13.6 acres of nearshore habitat (not accounting for mitigation/restoration/conservation measures).

The Guidelines also require "all appropriate and practicable steps" to minimize potential adverse impacts on the aquatic ecosystem. 33 CFR Section 210(d). Steps to minimize impacts are implemented through project modifications and permit conditions. See, EPA/DA MOA. The design of the shape and size of the pier has been modified to minimize shading impacts on shallow water habitat. The pier is also designed to be located away from the shoreline and linked to the shore by two trestles. This will also minimize impacts on shallow water habitat.

Once impacts have been avoided and minimized to the extent practicable, remaining impacts must not result in significant degradation of aquatic habitat and must be adequately compensated. The adverse impacts from the sediment transloading pier are identified in Section 6 of the DAR. The impacts will not result in significant degradation of aquatic habitat and would be adequately compensated. EPA has previously considered and approved disposal option elements that are very similar to those proposed in the transloading facility design. In the 2000 404(b)(1) Analysis, EPA examined the various components of the St. Paul Waterway Confined Disposal Facility (CDF) disposal option, which includes relocating Simpson's existing log haul-out operation from the St. Paul Waterway to the Middle Waterway in the same location proposed for the transloading pier. The relocated log haul-out would be used by Simpson during implementation, as well as after completion of the CDF remedy.

EPA's 404(b)(1) analysis also examined Simpson's proposed construction of a commercial pier at the tip of the Middle Waterway peninsula. Similar to the transloading pier design, the commercial pier was set away from the upland by a causeway designed to minimize shading effects to nearshore habitat. However, the footprint of that pier, as designed, would be twice as large as that of the sediment transloading pier (see Figure V-4). The combined habitat impacts of these three elements (CDF, relocated log haul-out, commercial pier) were analyzed under §404 to determine whether practicable alternatives existed, and if not, whether adequate mitigation was identified. EPA concluded that there would be unavoidable impacts from the CDF and its associated components that warranted additional mitigation beyond that proposed in the Habitat Plan. The agency also made a preliminary determination that "use of any of the disposal sites would not jeopardize listed species, as long as conservation measures related to construction timing, design, and techniques that protect and enhance ESA-listed stocks or habitat are implemented." EPA 404(b)(1) Analysis, p. 13.

With regard to the ability to provide adequate mitigation for the sediment transloading pier, it is important to first note that, compared to the CDF, relocated log-haul out, and commercial pier, the sediment transloading facility

would result in markedly reduced impacts to habitat. For instance, the transloading pier design does not involve the permanent loss of 11.05 acres of existing nearshore habitat for the CDF. See, Section 3.0 to this Technical Memorandum. Also, the transloading pier footprint would be approximately half that of the commercial pier. The proposed pier has been redesigned from a 525- by 80-foot structure to a 210- by 130-foot structure with 30-foot-wide access trestles connecting the pier to shore, the minimum size for a facility expected to offload at the rate required for the project (see Part I of this appendix). Similarly, the design of the pier has evolved in an effort to minimize habitat impact as shown on Figure V-4. At the same time, the proposed mitigation for the pier includes many of the recommendations (e.g., habitat connectivity, migration corridors, and habitat enhancement) EPA identified for the CDF Disposal Option (see Section 6).

In sum, the sediment transloading facility satisfies the 404(b)(1) analysis because it is a practicable alternative and the adverse impacts from the pier are unavoidable, but do not result in significant degradation of the aquatic habitat and will be adequately compensated. From a bay-wide perspective, the pier project would have a net gain in habitat within a critical area of the estuary for salmon and other species.

Simpson Reuse of Pier. Under the 404(b)(1) analysis and 2000 CB/NT ESD, EPA approved two facilities necessary for the remedy that were destined for reuse by Simpson after remedy construction—the new uplands created by the capped CDF and the relocated log haul-out operation on the Middle Waterway. EPA's evaluation of these facilities recognized this future reuse as did its recommendations for mitigation of aquatic impacts. As such, EPA's prior 404(b)(1) analysis is relevant both to the construction and use of the transloading pier during implementation of the remedy and to the reuse of these facilities by Simpson. In short, none of the factors in the 404(b)(1) analysis discussed above would change for Simpson's reuse of the pier.

4.1.1.2 Rivers and Harbors Act (Section 10) (33 USC 403)

Rivers and Harbors Act (Section 10) (33 USC 403); 33 CFR Part 320; 33 CFR Part 322. The Rivers and Harbors Act prohibits the creation of any unauthorized obstruction to the navigable capacity of any waters of the United States and prohibits any excavation or fill that alters or modifies the channel of any navigable water of the Untied States. In situations where the CERCLA permit exemption does not apply, such work must be recommended by the Chief of Engineers and authorized by the Secretary of the Army prior to beginning the work.

Analysis of a project under the Rivers and Harbors Act and Section 404 of the CWA, includes a public interest review, which involves "consideration of the full public interest by balancing the favorable impacts against the detrimental impacts" of the project. 33 CFR Section 320.1(a). In its 404(b)(1) Analysis, EPA concluded that implementation of the remedial actions, including the disposal options, "is not contrary to the public interest and would comply with the substantive elements of the Clean Water Act, Rivers and Harbors Act, and Endangered Species Act once compensatory mitigation is implemented." EPA 404(b)(1) Analysis, p. 27.

Among the public interest factors to be considered is the impact of the proposed project on navigation, 33 CFR 320.4(o). In its analysis, EPA stated that "Congressionally authorized navigation channels exist in both the Thea Foss and Hylebos Waterways.... Commercial navigation occurs in the outer portion of the Middle Waterway, but no federal channel exists." EPA 404(b)(1) Analysis, Attachment 2, p. 2-2. Thus, the transloading facility and future commercial barge pier reuse described above would not adversely affect a federal navigation channel.

Furthermore, as discussed below, with regard to consistency with the state shoreline management act (the applicable coastal zone management program) and aquatic land management laws, the pier would be located landward of the waterway line, so that any structures and moorage will be temporary and will not obstruct navigation. The other current maritime users in Middle Waterway previously commented to EPA that the relocated log haul out facility in this location would not conflict with their navigational use of Middle Waterway. The transloading facility and future commercial reuse would be less intensive than the log haul-out facility, as the staging and haul-out of log rafts would involve greater use of the waterway than barge deliveries to the pier. The near-term use of the pier for sediment transloading for the Thea Foss remedy and the long-term use of the pier for commercial barge deliveries including cargo unloading would therefore be consistent with and preserve authorized navigational uses of Middle Waterway.

The other applicable factors from the public interest review—fish and wildlife, water quality, coastal zones, environmental benefits, and mitigation—have all been considered in the context of other ARARs discussed in the memorandum. The sediment transloading facility and reuse by Simpson meet the substantive requirements of the Rivers and Harbors Act. The Corps has jurisdiction under the Rivers and Harbors Act to re-evaluate its public interest review and navigational determinations if the pier were to be substantially modified or utilized for substantially different uses than described in this memorandum.

4.1.1.3 Endangered Species Act (16 USC 1536(a)(d)); 50 CFR Part 402

Section 7(a) of the ESA requires federal agencies to ensure that their actions are not likely to jeopardize the continued existence of endangered or threatened species, or adversely modify or destroy their critical habitats. In 1999, Puget Sound Chinook and bull trout were listed as threatened species under the ESA. Because Puget Sound Chinook and bull trout inhabit aquatic areas in or near the site, EPA must ensure that is approval of the remedy will not jeopardize either of these species.

Substantive ARARs under the ESA consist of the requirements that the lead agency determine whether a threatened or endangered species, or its critical habitat, will be affected by a proposed action. This determination is made through the performance of a biological assessment and by consulting with the U. S. Fish and Wildlife Service (USFWS) and the National Marine Fisheries Service (NMFS) to receive a written biological opinion. If a determination is made that a threatened or endangered species or their habitat will be adversely affected by the planned action, the lead agency must avoid the action or take appropriate mitigation measures. If the conclusion is reached that threatened or endangered species are not present or will not be adversely affected, no further analysis or action would be required to comply with the ESA.

EPA transmitted a Biological Assessment for Commencement Bay Nearshore/ Tideflats (CB/NT) Superfund site to NMFS on July 31, 2000, which assessed the impacts of the remedial actions described in the August 2000 ESD. The ESD included the St. Paul Nearshore Fill disposal site (the CDF) and the associated relocation of the log haul-out facility. "EPA's assessment has concluded that performance of the remedial actions together with all of the mitigative measures that will be required is not likely to jeopardize the continued existence of any federally listed or threatened or endangered species or result in the destruction or adverse impacts to critical habitat for these species. EPA will continue to consult with NMFS and USFWS on these plans." ESD, pp. 8-9.

When the City selects a contractor and the final disposal option, information regarding the final disposal option and specific habitat mitigation measures will be included in the waterway-specific Biological Assessment. At that time, EPA will continue its consultation with the USFWS and NMFS regarding compliance of the remedial action of the Thea Foss and Wheeler-Osgood Waterways with this ARAR.

Sediment Transloading Facility and Simpson Reuse of Pier. Habitat impacts for the sediment transloading facility and Simpson reuse of the pier will be less than

the impacts associated with the CDF Disposal Option. See, discussion of 404(b)(1) analysis above and Section 6 of the DAR. In addition to compensatory mitigation, the City will provide affirmative conservation measures that will contribute to recovery of ESA-listed species and essential fish habitat mitigation as discussed in Section 5.0 of this appendix and Section 6 of the DAR.

4.1.1.4 Fishery Conservation and Management Act

The 1996 amendments to the Magnuson-Stevens Fishery Conservation and Management Act set forth the essential fish habitat (EFH) provision to identify and protect important habitats of federally managed marine and anadromous fish species. Federal agencies, such as the Corps, which fund, permit, or undertake activities that may adversely affect EFH, are required to consult with NMFS regarding the potential effects of the actions on EFH, and respond in writing to NMFS's recommendations.

EFH is defined as those waters and substrate necessary to fish for spawning, breeding, feeding, or growth to maturity. "Waters" include aquatic areas and their associated physical, chemical, and biological properties that are used by fish, and may include aquatic areas historically used by fish where appropriate. "Substrate" includes sediment, hard bottom, structures underlying the waters, and associated biological communities (NMFS 1999).

A large number of groundfish, coastal pelagic, and salmonid fish species have designated EFH in Puget Sound and some or all of these species may occur in the project area.

Project actions described above have the potential to adversely affect the EFH of managed species, but these effects are likely to be highly localized and minimal, and not reduce the overall value of the EFH. Following completion of the project, the disturbed areas are expected to return to conditions that are more favorable to EFH than those now present. Overall, the quality and area of littoral EFH and the quality of deeper EFH will be significantly improved by remediation and the associated compensatory mitigation under either sediment disposal option (see Section 6 of the DAR).

4.1.2 State ARARs

4.1.2.1 Water Pollution Control Act (Chapter 90.48 RCW)

A discussion of Section 401 CWA is presented in Section 4.1.1.1.

4.1.2.2 Shoreline Management Act (SMA)(Chapter 90.58 RCW); Chapter 173-16 WAC, Chapter 173-27 WAC, Part I)

The SMA establishes permit requirements for substantial development occurring within Washington shorelines, which includes those lands extending landward for 200 feet from all wetlands and river deltas associated with the streams, lakes, and tidal. Development as defined by WAC 173-27-030 includes construction of structures; dredging; filling; and driving of piling." Washington's Coastal Zone Management Plan requires consistency with the SMA. The Act is administered through a cooperative program between local governments and Ecology; however, local programs have the primary responsibility for initiating and administrating the regulatory programs of the SMA. The Act and its implementing regulations require counties and cities to develop shoreline master programs. The City of Tacoma's shoreline management requirements are applicable to the project. See, discussion below regarding the City of Tacoma shoreline and land use standards.

4.1.2.3 State Hydraulic Code (Chapter 77.55 RCW)

The state Hydraulic Code establishes requirements for the protection of fish from work that diverts, obstructs, or changes the natural flow or bed of marine or fresh waters. Mitigation is required for projects that directly or indirectly harm fish.

Sediment Transloading Facility. Construction of the pier will meet the requirements of this ARAR. The Contractor will work with the Natural Resource Trustees to complete in-water work during the fish window to protect outmigrating juvenile salmonids and cease work if adverse effects to salmonids are observed. The transloading pier, unlike a traditional pier design, is not contiguous with the backland so it preserves existing habitat quality and provides a juvenile salmonid habitat corridor. Impacts to aquatic habitat from the pier are offset by enhancing the adjacent shorelines in the Middle Waterway Habitat Corridor, and removing approximately 1,700 existing creosote-treated pilings at the head of the Middle Waterway/St. Paul Peninsula as described in Section 6 of the DAR.

Simpson Reuse of Pier. Reuse of the pier by Simpson also meets the requirements of the Hydraulic Code. Reuse by Simpson will not increase the footprint of the pier, nor will it result in impacts to aquatic habitat in excess of those resulting from construction and use of the pier for sediment off-loading. Elements of pier design and habitat mitigation implemented for sediment off-loading will be maintained during Simpson's reuse of the pier.

State Aquatic Lands Management Laws and Public Trust Doctrine. Following a legislative finding that "state-owned aquatic lands are a finite natural resource of great value and an irreplaceable public heritage," management of state-owned aquatic lands must be in accordance with constitutional and statutory requirements. It must also strive to provide a balance of public benefits for all citizens of the state, including:

- Fostering harbor uses;
- Encouraging direct public use and access;
- Ensuring environmental protection; and
- Generating revenue consistent with these benefits (economics).

State-owned aquatic lands are managed to preserve and enhance water-dependent uses favoring the enhancement of renewable resources, water-borne commerce, and the navigational and biological capacity of the waters for statewide interests. State-owned aquatic lands are managed considering the natural value of wildlife habitat, natural area preserves, ecosystems, and spawning areas.

Sediment Transloading Facility and Simpson Reuse of Pier. The sediment transloading facility for upland disposal is consistent with the state DNR authorities for managing aquatic lands. The outer edge of the pier should not extend beyond the inner harbor line to avoid obstructions to navigation consistent with DNR policy. The sediment transloading facility and reuse of the facility by Simpson are consistent with DNR's decision-making criteria for Commencement Bay as follows:

- **All Disposal Decisions must be Clearly in the Long-Term Best Interest of the Public.** The sediment transloading facility preserves future navigation and commerce options for public aquatic lands at the mouth of Thea Foss Waterway and complements the Thea Foss Waterway redevelopment. Implementation of the proposal would also preserve and redevelop industrial land in the Port Industrial area (a high priority industrial growth area in the City's comp plan and shoreline program/state CZMP). Finally, the habitat component of the proposal would accelerate salmon recovery and habitat restoration in the Puyallup River Delta Habitat Focus Area and Puyallup River watershed (a high priority for shoreline, NRD, and ESA efforts).

- **Disposal Decisions will be Made in the Context of the Whole Bay and DNR's Long-Term Stewardship Goals for Publicly Owned Land.** The sediment transloading facility proposal includes measures addressing salmon recovery and habitat restoration (see Section 6 of the DAR). The proposal

fosters compatible harbor uses (see below) and keeps options open on public waterways for future public and business navigational needs. It also facilitates disposal of contaminated sediment removed from publicly owned land (see below).

Preference will be given to disposal projects that show:

- **A Clear Net Gain in Habitat Area and Function.** The remediation of the Thea Foss and Wheeler-Osgood Waterways will result in an overall net gain of habitat quality (see Section 6 of the DAR). The proposal for the sediment transloading facility includes enhancing 1.01 acres of Middle Waterway Corridor by modifying slope and substrate and adding large woody debris. The project would also enhance approximately 2.86 acres of marine littoral habitat on the Peninsula by removal of approximately 1,700 creosote-treated pilings. The mitigation in Section 6 of the DAR is to compensate for permanent impacts caused by the pier.

- **Protection and Creation of Critical Habitats for Listed or Candidate Threatened or Endangered Species.** The project provides for protection of near-shore migration corridors for salmon migration. Enhancement of the Peninsula would improve the nearshore migration corridor for juvenile salmonids leaving the Puyallup River.

- **Avoidance and Minimization of Impacts and Compensatory Mitigation Measures.** Upland disposal of contaminated sediments from the Thea Foss and Wheeler-Osgood Waterways avoids the proliferation of disposal facilities in the bay. The facility was designed to minimize its aquatic area footprint. The mitigation/restoration proposal provides a net gain in habitat area.

- **The Best Rate of Return on Investment of State Natural Resources.** Simpson is proposing a public-private partnership that removes contaminated sediment from state-owned aquatic lands, maintains major public waterways, and includes shared habitat enhancement critical to salmon and other species.

4.1.3 Tribal ARARs

4.1.3.1 Puyallup Water Quality Program (Puyallup Tribal Council Resolution No. 151288C)

A discussion of Section 401 CWA is presented in Section 4.1.1.1.

4.1.3.2 Puyallup Tribe of Indians Settlement Act of 1989 (Public Law 101-41)

The Act establishes environmental standards and requirements for fisheries enhancement and protection, and provides cultural and religious preservation of activities affecting tribal interests.

Sediment Transloading Facility and Simpson Reuse of Pier. The pier is an integral part of the remedial action that will result in a net gain in habitat. Tribal representatives and staff have been involved in review of remedial action and habitat plans for determination of compatibility with the standards and requirements of the Act for fisheries habitat restoration or enhancement.

4.1.4 Local ARARs

4.1.4.1 Compliance with the City of Tacoma Shoreline and Land Use Standards

Shoreline Management Program (SMP)(Chapter 13.10 Tacoma Municipal Code). Pursuant to the authority under the Shoreline Management Act, Chapter 90.58 RCW, the City of Tacoma developed a Shoreline Master Program (SMP), which has been codified in Chapter 13.10 of the Tacoma Municipal Code (TMC). In the SMP, the City created shoreline districts. The pier would be located in Shoreline District S-10, Port Industrial, which has been designated an "urban environment." TMC 13.10.130C. The code defines an "urban environment" as designed to ensure optimum utilization of shorelines within urbanized shoreline areas. TMC 13.10.030.53.c. The intent of the "S-10" Shoreline District "is to allow the continued development of the Port Industrial Area, with an increase in the intensity of development and a greater emphasis on terminal facilities within the City." TMC 13.10.130.A.

The Vision for Commencement Bay (CBCAC 1993) is a related plan and program in the Tacoma SMP. The CBCAC Land Use Goal and Principles element of the Vision for Commencement Bay has been incorporated into GMA, critical habitat, and shoreline coastal zone management planning efforts by the City of Tacoma. Under this Vision, Commencement Bay is seen as a working waterfront of port and heavy industrial uses. The sediment transloading pier and reuse by Simpson are consistent with the intent of the S-10 Shoreline District and the Vision for Commencement Bay.

The SMP identifies the uses and development activities that are permitted in each district. Permitted uses and activities within Shoreline District S-10 include

dredging; habitat improvement; piers, wharves, docks and floats; and port, terminal, and industrial water-dependent or water-related uses and development. TMC 13.10.130.D. The SMP provides examples of water-dependent uses that include barge loading facilities, ship cargo terminal loading areas, and habitat improvement projects—all of which are part of the proposed near-term (sediment transloading) and long-term (marine barge cargo pier) uses described in Section 2. TMC 13.10.175.030. The sediment transloading pier and reuse by Simpson are permitted development and uses for the location. Not only is the pier and its reuse permitted, it is a priority use. See, TMC 13.10.175.B.15.a(2): "Water-dependent port, terminal, and industrial uses shall have shoreline priority over all other uses in designated shoreline industrial areas" such as S-10 Shoreline Districts.

The general regulations in the SMP are found in Section 13.10.175.A. Regulations specific to types of activities and uses are found in Section 13.10.175.B. Both sections contain regulations addressing public access/public view and environmental protection measures that apply to the pier. The code requires that public viewing access to Port, terminal, and industrial activities be provided for with the project unless such viewing access would interfere unreasonably with operations that would endanger public health or safety. See also TMC 13.10.175.B.15.a(5). The public will be able to access the pier site by water, but access and view from the uplands would create unavoidable health and safety hazards. The pier is on Simpson property. Access would only be available through the operating Simpson facility, where trucks and heavy machinery are operating. While the remediation is ongoing, sediment will be off-loaded from two to four barges per day and transferred to a sediment storage area and to railcars. This activity will be coordinated with on-going Simpson Mill activities to prevent operational conflicts. During Simpson's reuse of the pier, the company's operations would be located up the edge of the shoreline and out onto the pier. Allowing the public access to the mill site would create unavoidable health and safety hazards.

In addition, the Thea Foss and Wheeler-Osgood Waterways cleanup is promoting Foss Waterway Redevelopment, which has substantially increased public access to the shoreline along the Esplanade. The adjacent City and Simpson restoration sites on Middle Waterway provide enhanced public access and viewing of the shoreline and restored habitat at the head of Middle Waterway. The habitat enhancement associated with the Middle Waterway pier would improve habitat connectivity and use by diverse species, which would improve the quality of the access enjoyed by the public.

The code requires environmental protection measures that apply to pier construction and operation. Erosion must be minimized during and after construction. TMC 13.10.175.A.2.a. Per TMC 12.08 (stormwater ordinance), the Contractor will be required in the project specifications to prepare and submit a Stormwater Pollution Prevention Plan and an Erosion Control Plan. These plans shall be prepared and, upon approval, implemented by an erosion control specialist recognized by Ecology. Specific elements of the Plan shall include:

- Mark clearing limits;
- Establish construction access;
- Control flow rates;
- Install sediments controls;
- Stabilize soils;
- Protect slopes;
- Protect drain inlets;
- Stabilize channel and outlets;
- Control pollutants;
- Control dewatering;
- Maintain BMPs; and
- Managing the project.

The Contractor-prepared plans will be reviewed, approved, and monitored by an erosion control specialist from the City of Tacoma.

Likewise, the contamination of surface waters and increased surface runoff must be minimized. TMC 13.10.175.A.2.b. The BMPs identified for the pier are intended to minimize contamination of surface waters. See discussion of CWA Section 401 above. The pier itself will remain as constructed, including the ecology blocks or textile wall to prevent spillage from the pier, when Simpson reuses it after remediation is complete. Although there will be an increase in impervious surface due to paving of the pier and the adjoining upland holding/operation area, the purpose of such paving is to prevent direct discharge into Middle Waterway or other reaches of Commencement Bay.

The SMP also requires storm drainage facilitates, separate from sewage disposal systems, constructed and maintained to meet all federal, state, and local regulations. 13.10.175.A.2.c,d. During use of the pier for sediment transloading, all free water that accumulates, including rainfall runoff from the entire operational area will be collected and routed to an on-site water treatment system. When Simpson reuses the pier, stormwater collected from the paved

areas will be delivered to the stormwater management system at the new Tacoma sawmill facility. See Section 2.4.

Development regulations in the SMP that apply to the pier, reuse, and associated mitigation activities include those for dredging, habitat improvement; piers; and port, terminal, and industrial. TMC 13.10.175.B. Deposit of dredged materials is permitted for habitat improvement. The returned water from any dredge material disposed of on land must meet applicable water quality standards. TMC 13.10.175.B.5. As discussed under CWA 401 above, water partitioned from the sediment will be collected and treated on site. After treatment, the water will be discharged into Middle Waterway. The discharged water will meet water quality standards. See Section 2.4.

The regulations define "habitat improvement" to include actions taken to intentionally improve overall processes, functions and values of aquatic habitat, and may or may not be in conjunction with a specific development proposal. TMC 13.10.030.17. The SMP requires that habitat improvement be protected in perpetuity, and be done on a watershed basis and seek to promote ecosystem or landscape approach. TMC 13.10.175.B.8.a,b. EPA has emphasized the importance of connectivity—habitat that can be linked to other habitat—and adopted the Simenstad report that emphasized the importance of the neodelta habitat. See, ESD (August 2000). Both of the proposed mitigation projects meet these requirements. It is expected that the final Habitat Plan will identify appropriate legal measures to protect the mitigation projects in perpetuity. Removal of the pilings will enhance the habitat in the neodelta area. Enhancement of the Middle Waterway Corridor will promote connectivity of habitats.

The SMP includes regulations for log storage and rafting. TMC 13.10.175.B.11. However, log rafting will not occur at the pier, as Simpson expects to reuse the pier as a haul-out for barged log bundles delivered to the Simpson sawmill or other end users. Moreover, log storage is not expected to occur on the pier itself, but instead on the adjacent paved upland. However, to the extent such storage may trigger requirements under the SMP, the facility will be designed to comply with such requirements. The regulations require provisions to securely retain all log chunks, end-trimmings, wood, or bark. Accumulations of bark and wood debris on docks and on upland storage areas must be kept out of the water. After cleanup of such debris, it must be disposed of where leachate will not enter surface water or groundwater. Where dry land storage occurs, steps must be taken to ensure surface runoff is collected and discharged to an approved drainage system. Again, Simpson will not store logs in the water, but will unload unbroken log bundles directly from a barge onto the pier deck. The

bundles will either be delivered directly to the existing sawmill log yard or placed in a temporary upland storage area adjacent to the pier. The pier deck and trestles and upland storage area will be equipped with positive containment (curbs, ecology blocks) to prevent any bark or wood debris that may fall off the log bundles from entering Commencement Bay. Bark and wood that accumulates will be removed form the pier and storage area and sent to the sawmill for grinding into beauty bark or wood fuel. Paved areas will be equipped with a stormwater collection system to deliver the stormwater to the existing Tacoma sawmill stormwater system.

The development regulations provide numerous requirements for the construction and use of piers. Piers must be equipped with adequate lifesaving equipment; plastics or other non-degradable materials used in construction must be safely contained. TMC 13.10.175.B.14.a.(1),(3). These requirements are addressed in the Specifications.

The pier must be constructed to avoid or minimize impairment of views from existing uses/structures on neighboring properties and to enhance public access unless incompatible with water-dependent use. TMC 13.10.175.B.14.a(4),(7). Given the location in the industrial area and the large amount of land owned by Simpson, impairment of views is not an issue. As discussed above, public access from the landward side is incompatible with use of the pier.

The pier must be constructed so as not to interfere with or impair navigational use of surface water. TMC 13.10.175.B.14.a(5). The SMP defines "navigable waters" as those capable of being used practically for the carriage of commerce. Navigable waters do not include waters landward of the Inner Harbor Line. TMC 13.10.175.030.34. The outer edge of the pier will not extend beyond the Inner Harbor Line and thus will not interfere with or impair navigation.

The SMP requires that pilings shall be of materials other than treated wood. This requirement does not apply to fender systems, mooring bollards, dolphins, nor to wood treatments deemed acceptable in the future by federal, state, or local agencies. TMC 13.10.175.B.14.a(9). The pilings for the sediment transloading pier and the pier during reuse will be constructed of steel or concrete, in compliance with this regulation.

In evaluating construction of the pier, the City considers the following conditions applicable to the pier: (a) environmental and navigational impact, waste disposal, oil and gas spillage and impact on adjacent land; (b) whether cooperative use is present or may be in the future; and (c) whether existing facilities may be used

or expanded. New facilities require a demonstration of public benefit as appropriate. TMC 13.10.175.B.14.a(10).

The environmental impact of the pier is discussed in Section 6 of the DAR. The impact will be due to habitat area occupied by pilings (0.01 acre) and habitat shading. The pier will avoid the impacts of filling nearshore habitat under the CDF Disposal Option and has been designed to minimize impacts. See, discussion of 404(b)(1) above. Unavoidable impacts will be fully compensated for the mitigation identified in Section 6 of the DAR. There will be no navigational impact because the pier is inside the Inner Harbor Line. Waste disposal and oil and gas spillage from construction and operation of the pier must be considered. A similar requirement applies to industrial development. Such development must have the capability to promptly contain and cleanup spills and discharges or pollutants. TMC 13.10.175.B.15.a(1). Waste disposal and control of oil and gas spillage will be addressed in the Contractor's Stormwater Pollution Prevention Plan to be approved by the City and EPA. Finally, the impact on adjacent land is positive as the land is owned by Simpson who will reuse the pier after remediation is completed. The pier will be cooperatively used by the City (during remediation) and Simpson (post-remediation). The pier will be used for marine cargo or other end uses.

There is no existing structure that would facilitate the transloading of sediments. The pier has a positive public benefit. By facilitating the cleanup of the Thea Foss Waterway, the sediment transloading facility preserves this waterway for commerce and navigation consistent with the vision of Commencement Bay under the Tacoma SMP and related plans and programs. Reuse of the pier by Simpson negates the requirement that the pier be dismantled after remediation is complete, which would cause unnecessary impacts to the environment.

With regard to Simpson reuse, the primary applicable requirements for Port, Terminal, and Industrial are spill containment and cleanup, and public access and view TMC 13.10.175.B.15 compliance with these requirements are discussed above.

4.2 Compliance with Federal and State Habitat Mitigation Policies (a TBC)

The NCP defines TBC materials as non-promulgated advisories, criteria, or guidance that were developed by EPA, other federal agencies, or states that are not legally binding and do not have the status of potential ARARs. Where no promulgated cleanup levels or standards exist, they are useful in helping to determine how to carry out certain activities.

The EPA/Corps Memorandum on Mitigation requires that there be "no net loss of habitat function." Similarly, the Department of Fish and Wildlife's Habitat Management Policy (POL-410), is that there be "no net loss of habitat productive capacity." As with the EPA/Corps Memorandum and the state Habitat Management Policy, the USFWS Mitigation Policy does not focus on acre-for-acre loss replacement. Rather it focuses on habitat value (combination of biological and cultural value) and scarcity of particular habitats. The policy requires, depending upon habitat quality, that there be no loss of existing habitat value (Resource Category 1) or that there be no net loss of in-kind habitat value (Resource Category 2).

The overall Fish and Wildlife Habitat/Wetland Program Goal of the Puget Sound Water Quality Management Plan (the Puget Sound Plan) is:

- To ensure coordination among agencies so that there is no net loss of habitat function and acreage in the short-term and a net gain of habitat function and acreage in the long-term.

Sediment Transloading Facility. The sediment transloading facility meets the mitigation sequencing requirements under Section 404(b)(1) and federal and state habitat mitigation policies including, in order of importance: avoidance, minimization, and compensatory mitigation. It also would result in no net loss of habitat function or habitat productive capacity. The proposal will meet the project objective of providing a net gain in habitat functions for fish and wildlife at the mouth of the Puyallup River, an ecologically important area of Commencement Bay. The project habitat features convert existing low to medium quality habitat to more diverse medium to high quality habitat. The nearshore aquatic habitat affected by pier construction will not be lost but, in any event, is not unique and irreplaceable, therefore, the USFWS Mitigation Policy would require that there be no net loss of in-kind habitat value. The project habitat features meet this requirement.

Federal, state, and local agencies generally attempt to follow the Puget Sound Water Quality Management Plan to protect water quality and habitat in Puget Sound, an estuary of national significance. The project will provide an increase in the quality and function of habitat and critical habitat acreage both during use of the pier for transloading sediment and during reuse for transloading logs.

Simpson Reuse of Pier. Reuse of the pier by Simpson also meets these goals. Reuse will not increase aquatic impacts and habitat minimization/mitigation elements will be maintained.

5.0 CONTRIBUTION TOWARD RECOVERY AND PERFORMANCE CRITERIA

The ESD (pg. 14) states: "It is EPA's intent that remediation, including required compensatory mitigation, of the CB/NT site cumulatively contribute toward recovery of ESA listed species." The analyses of the mitigation balance described in Section 6 of the DAR clearly demonstrate that the proposed remedy, with either the Upland or CDF Disposal Option, provides such a positive contribution.

The ARARs review and analysis provided in Section 4.0 demonstrates that the Thea Foss Waterway remediation with the upland sediment disposal option is compliant with the intent of all ARARs.

The proposed remedy and compensatory mitigation actions associated with either disposal option also meet the nine performance criteria provided in the ESD (pg. 14). Section 6.7 of the DAR specifically summarizes how the proposed actions meet those criteria.

F:\Docs\Jobs\407268\January 2003 DAR Revisions\Appendix V.doc

PART III: MIDDLE WATERWAY TRANSLOADING PIER GEOTECHNICAL ENGINEERING DESIGN STUDY

FINAL DESIGN

PART III: MIDDLE WATERWAY TRANSLOADING PIER GEOTECHNICAL ENGINEERING DESIGN STUDY THEA FOSS, TACOMA WASHINGTON

INTRODUCTION

This report presents the results of the geotechnical engineering design study for the proposed Transloading Pier Facility at the Thea Foss Middle Waterway in Tacoma, Washington. This report is organized into several distinct sections. A general site and project description is followed by a site geological characterization. The appendices present logs of the explorations conducted at the site and corresponding laboratory testing.

SITE AND PROJECT DESCRIPTION

The location of the site is shown on Figure 1. The proposed facility consists of a U-shaped, pile-supported pier, as outlined on Figure 2. Barges will dock adjacent to the pier and will be potentially unloaded using a crane supported on the pier structure. Prior to the pier construction, an up to 6-foot-thick zone will be dredged as part of the remediation in the Middle Waterway. Additionally, it is proposed to pave an approximately 2-acre area to be used as a storage facility.

PURPOSE AND SCOPE OF THIS STUDY

The purpose of this study was to:

- Assess subsurface site conditions;
- Assist the structural engineer in establishing foundation design criteria;
- Evaluate slope stability associated with the proposed construction; and
- Provide geotechnical recommendations for the structural engineers related to design and construction.

The scope of this study included:

- Field explorations at the site;

- A review of available information related to previous geotechnical work near the project site; and

- Identification and analyses of the geotechnical engineering considerations.

The field explorations consisted of two hollow-stem auger borings, designated TLP-1 and TLP-2.

Following completion of the field explorations, various laboratory tests were conducted on selected soil samples retrieved from the borings to classify the soils and determine the geotechnical index and engineering properties of the materials. Finally, geotechnical analyses were performed to develop recommendations for design and construction.

SUBSURFACE CONDITIONS

The predominant geologic features at the site consist of alluvial soils, i.e. sediments deposited by Puyallup River. It is this layer that controls the pile capacity and the site slope stability.

A Site and Exploration Plan, as well as a Geotechnical Boring Map showing the approximate location of the borings and the pier facility, are presented on Figures 1 and 2. Detailed logs of the Hart Crowser borings, and corresponding geotechnical laboratory testing, are included in Attachments A and B, respectively.

Within the area of the proposed pier structure, the following material from the ground surface downward was typically discovered:

Alluvium. This layer consists of alternating silty, fine Sand, and sandy Silt. These soils range from very loose to medium dense and dense, and very soft to stiff and very stiff. This layer is substantial in thickness. An offshore exploration was drilled from a mudline depth of 35 feet to 200 feet below tide, i.e., soil thickness of 165 feet. The onshore exploration were drilled to approximately 170 feet below ground surface. In both cases, the alluvial soils were still present at depth, and therefore, an alluvial soil thickness in excess of 170 feet should be expected.

Groundwater

Groundwater was encountered in TLP-2 at a depth of approximately 10.5 feet below existing ground surface, i.e., at approximately elevation 4.5 feet.

However, the groundwater conditions may fluctuate with time due to the water level of Commencement Bay, rainfall, temperature, tidal and current conditions, and other factors. Based on previous analyses of the groundwater elevation on the Peninsula, a groundwater elevation of 9 feet was used for the analysis.

GEOTECHNICAL ENGINEERING ANALYSES

This section includes design criteria addressing site preparation, foundations, slope stability, pavement design, and other factors. These design criteria are based on the preceding site descriptions, loadings, and the subsurface conditions as revealed by the explorations. Note that subsurface soil conditions interpreted from the explorations accomplished at discrete locations at the site and soil properties inferred from the field and laboratory tests formed the basis for developing the geotechnical parameters contained herein. The nature and extent of variations between the explorations may not become evident until construction. If variations appear, it may be necessary to re-evaluate the design.

General Considerations

In general, layers of Silt and Sand, with scattered organic material were encountered below the ground surface. This layer influences the foundation design.

Based on loading information provided by the site owner and present in Part I and Part II of this appendix, the most practical foundation system for the pier facility will be piles embedded into the layer of medium dense to dense Sand, which was encountered in the explorations. This approach will limit the settlements of the pier facility.

Additionally, the existing slope in the vicinity of the proposed pier is prone to slide, particularly in case of a seismic event. Compaction, or pinch, piles will need to be installed to mitigate potential slope instability.

Site Preparation and Construction Sequence

This section addresses site preparation of the pier footprint and flexible pavement areas. Site preparation should consist of stripping any vegetation, cutting to design subgrade elevation, proof rolling, and placement of structural fill.

Topsoil thicknesses encountered during the explorations were relatively thin. The need for stripping should therefore be small, such that the appropriate stripping and overexcavation can be done on a case-by-case basis, depending on the location, elevation, and nature of the foundation elements being constructed. These decisions can best be made in the field by qualified personnel during construction.

Pavement Design

The proposed plan is to pave approximately 2 acres (or up to 4 acres) and use the area for storage as shown on Figure 2. Following the guidelines should be used for the Log Haul Road in designing the pavement section:

- Prior to placement of structural fill, compact the exposed subgrade to a minimum of 95% of the modified Proctor maximum dry density; under
- 18 inches of slope cap filter material, such as clean well-graded sand and gravel, with less than 5% fines (that material passing the No. 200 sieve, based on the minus 3/4-inch fraction); under
- 8 inches of quarry spalls; under
- 4 inches of crushed rock base course (CRBC); under
- 4 inches of asphalt treated base (ATB); under
- 8 inches of class B asphalt concrete pavement (ACP)

Structural fill should be compacted to a minimum of 95% of the modified Proctor maximum dry density. The fill should be compacted in lifts with a maximum loose lift thickness of 9 inches using a machine-operated compactor (such as a vibratory roller or a hoepack), or 6 inches using a hand-held compactor (such as a plate compactor or jumping jack).

Parts of the paved area will be used as turn-around for the forklift trucks. These areas may need to be designed as cast-in-place reinforced concrete pavement and will be addressed if the Upland Disposal Option is selected.

Structural Fill

The suitability of site soils for compacted structural fill will depend upon the gradation and moisture content of the soil when it is placed. As the amount of

fines (that portion passing the No. 200 sieve) increases, the soil becomes increasingly sensitive to small changes in moisture content, and adequate compaction becomes more difficult to achieve. Soil containing more than about 5 percent fines cannot be consistently compacted to a dense, nonyielding condition when the water content is greater than about 2 percent above optimum.

Use of On-Site Soils

In general, the near-surface, on-site soils may be suitable for use as structural fill during favorable weather conditions. During wet weather, however, much of the site soil would likely be unsuitable for use due to its silty nature and organic content. Careful selection and separation of site soils will likely be necessary if on-site soils are to be used. The suitability of on-site soils will depend in part on moisture conditions during construction. The suitability of specific site soils should be assessed at that time. In general, as the silt content of soil increases, it becomes increasingly difficult to compact properly, particularly during wet weather conditions. All fill soil placed beneath footings, slabs-on-grade, pavement sections, and against retaining walls is considered to be structural fill.

Recommendations for the Use of On-Site Soils

- Prior to placement of structural fill, compact the exposed subgrade to a dense non-yielding condition.

- Use clean (less than 5 percent by weight passing the No. 200 sieve, based on the minus ¾-inch fraction of the material), well-graded sand and gravel for structural fill if construction takes place during wet weather. Somewhat siltier soil can be used if its moisture content can be maintained near optimum.

- Maintain moisture content of structural fill within 2 percent of optimum.

- Place all structural fill within the upper 3 feet under all foundations and within the upper 2 feet of pavement sections in lifts (maximum 9-inch loose thickness).

- Compact all structural fill below footings and within 3 feet below pavement sections to a minimum of 95 percent of the modified Proctor maximum dry density (as determined by the ASTM D 1557 test procedure). Fill that is more than 10 feet below foundations and more than 3 feet below pavement sections can be compacted to 92 percent.

- Verify the compacted densities of all lifts by testing. Any material to be used as structural fill should be sampled and tested prior to use on site, to determine the maximum dry density and gradation.

Foundation Support

The appropriate foundation type depends mainly on the foundation loads and tolerable total and differential settlements. The explorations revealed a substantial thickness of alluvial soils, consisting of layered very loose to medium dense and dense, silty, fine Sand, and soft to stiff and very stiff, sandy Silt. The explorations extended to elevations of –187 and –154 feet; however, no apparent very dense bearing layer was encountered. This will require the piles to be fairly long, as the pile capacity will need to be developed through predominantly skin friction, as well as end bearing. The following section discusses the pile foundation design.

Pile Foundation Design

Given the loads for the pier, 24-inch prestressed octagonal concrete piles will be used. The design service loads are 130 and 150 kips of dead load and live load per pile, respectively.

To achieve these capacities, the piles should be embedded to approximately elevation –115 feet. At this elevation, we encountered a layer of medium dense to dense, silty Sand. By embedding the piles in this layer, we maximize the end bearing capacity of the piles, and the capacities as indicated in Table 1 can be used for the structural design.

Table 1 - Pile Capacity[a]

Compressive Capacity in Kips		Uplift Capacity in Kips	
Ultimate	Allowable (FS^b = 2.5)	Ultimate	Allowable (FS^b = 2.5)
800	320	280	112

a) For driven 24-inch octagonal concrete pile only.
b) FS = Factor of Safety

Uplift capacity for dolphin piles can be calculated by using an average ultimate skin friction value of 400 psf, or an allowable skin friction value of 200 psf for a FS of 2.0. The uplift capacity is calculated by multiplying the pile circumferential

area with the skin friction value. Note that the upper 10 feet of the mudline soils should be neglected for uplift capacity calculations.

Lateral Pile Capacity

L-Pile will be used for estimating the lateral pile capacity. The L-Pile parameters are presented in Table 2.

Table 2 - L-Pile Parameters

Unit Weight in pcf	Friction Angle in degrees	k-value in pci
125	30	30

Estimated Pile Settlements

The settlement observed at the top of a pile is calculated using a semi-empirical method that combines the contribution of settlement from three components (U.S. Army Corps of Engineers 1991; U.S. Navy 1982):

- Axial (elastic) deformation of the pile shaft;
- Load transferred to the pile tip; and
- Load transferred along the pile shaft.

Settlement from Axial (Elastic) Deformation of the Pile Shaft

Analyses indicate that approximately 50 percent of the pile settlement will be from this component for the anticipated working loads (130 kips dead load plus 150 kips live load). The axial deformation of the pile shaft is affected by the load transfer properties between the pile and surrounding soils. Settlements of about 0.1 inch are estimated resulting from elastic compression of piles driven at the site for the described loading conditions and corresponding pile tip elevations according to the recommendations give for the pile tip elevation.

Settlement from Load Transferred to the Pile Tip

This portion of the settlement derives from settlement of the pile tip due to load transferred from the pile tip to the soil directly below the tip. Analyses indicate that this settlement is approximately 0.1 inch.

Settlement from Load Transferred along the Pile Shaft

This portion of the settlement derives from settlement of the pile tip due to load transferred from the pile shaft to the surrounding soil. Analyses indicate that this settlement is approximately 0.1 inch.

Summary

As can be seen from the sections above, the three pile tip settlement mechanisms contribute approximately equally to a total pile tip settlement of 0.3 inch. It should be noted that this is an estimate based on the dead plus live load for a total load of 280 kips. It may be beneficial to use a spring constant approximation, such that settlement of the pile tip could be calculated for a variety of loads

Spring Constant. A spring constant can be used to model elastic compression of the pile/soil system. It is generally represented by the equation:

$$k_v = X \frac{AE}{L}$$

Where:

A = Pile cross sectional area in square inches;
E = Pile modulus of elasticity in pounds per square inch;
L = Pile effective length in inches; and
X = Value dependent on soil-pile interaction.

The spring constant for piles can be calculated separately for the portion of the pile above mudline and the portion below the mudline. For the portion of the pile above the mudline the value of X should be equal to 1.0 and the effective length, L, should be the pile length between the pile cap and the mudline. Below the mudline, our soil-pile interaction analyses for the proposed 24-inch octagonal concrete piles indicate that a value of X of 0.5 is appropriate. Below the mudline, the effective length, L, should be the pile length between the mudline and toe of the pile.

Pile Installation

The following approach is recommended for pile installation:

- Space piles within groups no less than 3-pile diameters on center.

- Drive concrete piles with a diesel hammer or hydraulic hammer with variable stroke setting, having a rated energy of at least 160,000 foot-pounds. Prior to construction, and once a pile driving hammer has been selected, a WEAP analyses should be completed by the design engineers to check that the piles are not being overstressed during driving.

- Verify pile capacity in the field based on a dynamic pile-driving formula. Such a formula should take into consideration various physical factors such as energy of the hammer, the size and length of the piles, modulus of elasticity of the pile materials, and the resistance for the final driven foot. An appropriate formula is the Janbu or the Danish (S_o) pile-driving formula.

The S_o pile-driving formula is presented below:

$$Q = \left(\frac{aE_r}{S + S_o} \right)$$

Where:

$$S_o = \left(\frac{aE_r L}{2AE} \right)^{1/2}$$

Q = Ultimate pile capacity in pounds,
E_r = Rated hammer energy in foot-pounds,
a = Hammer efficiency = delivered energy ÷ rated energy = (about 0.8 unless measured)
L = Length of pile in feet,
A = Cross sectional area of pile in square inches,
E = Modulus of elasticity of pile material in pounds per square inch,
S = Final set (penetration per blow) in feet.

- To correspond to the allowable design value, apply a factor of safety of at least 2.5 to the ultimate pile capacity as determined by the above pile-driving formula.

- For piles designed and installed as recommended herein, total settlement of individual piles and pile groups is estimated to be on the order of 0.5 to 1 inch or less.

- The City's field engineer/geologist should be present during pile installation to verify that installation is according to plans and specifications.

LIQUEFACTION ANALYSES

As described above, the two explorations advanced in the vicinity of the proposed pier encountered loose and soft soil deposits. These deposits are generally silty Sand to sandy Silt, with no clay. The low blow counts (i.e. Standard Penetration Test values) observed during sampling, in conjunction with a high groundwater table, make these soils prone to liquefaction during a seismic event. The liquefaction potential for the soils during a 475-year and 975-year event were analyzed. The majority of the soils below the water table would liquefy during the smaller of the two events, while the remaining soils would liquefy during the larger event.

The effect of liquefaction will most likely be subsidence of the ground surface, and potentially failure of the offshore slope, as discussed in the next section.

SLOPE STABILITY ANALYSES

As described previously, there is a substantial thick layer of loose and soft alluvial soils present at the site. The existing slope in the vicinity of the proposed pier is in a 3H:1V configuration. By dredging the proposed 6-foot-thick zone as depicted on Figure 3 (based on the 90 Percent Design for the Middle Waterway) a portion of this slope will be steepened into a 2H:1V configuration.

Slope stability analyses were performed on the 2H:1V section assuming various scenarios. This section was analyzed without the pier piles (using the *in situ* soil strength). A ground improvement zone, such as overexcavation and replacement was also analyzed. Installation of timber pin/compaction piles, which would densify the *in situ* soil and provide *in situ* reinforcement was also considered. Finally, the section assuming the presence of concrete pier piles was analyzed. For both pin/compaction and concrete piles, a soil strength (in the vicinity of those piles) was assigned using a weighted average of the *in situ* soil strength and the timber and concrete strength. Most of these four scenarios were analyzed for the following three cases: static, pseudo-static (by applying the 475-year event acceleration factor of 0.30g), and finally using soil residual strength properties for soils that will liquefy during the 475-year event earthquake.

In the slope stability analyses, the water level in the waterway was assumed at elevation 0 feet, while the onshore groundwater level was assumed at elevation 9 feet. This is a relatively conservative approach, as the elevation of the waterway on the average is higher than 0 feet, and that the groundwater level

onshore most likely will be only a few feet higher than the waterway elevation. This approach will cause a lower resistance to sliding for an effective stress analysis, and therefore lower factor of safety would be calculated.

Below is a brief discussion on the results from the stability analyses.

Slope Stability on Proposed Slope Configuration. The analysis shows the proposed 2H:1V slope is stable in the static case, with factor of safety of approximately 1.32 and 1.45 for a toe and global failure, respectively. For a pseudo-static seismic case, these factors of safety decrease to approximately 0.70 and 0.83. When analyzing the post-earthquake case, by applying residual strength to liquefiable soils, the factors of safety decrease further to below 0.4 for a global failure. It should be noted that even smaller factors of safety were observed for cases for shallow failures; however, these failures would most likely not impact the pier facility structure.

Slope Stability on Proposed Slope Configuration with Ground Improvement. This scenario is very similar to the previous scenario, with the exception that the upper 10 to 12 feet of offshore slope soils have been replaced with higher strength material. This is a typical ground improvement technique for offshore slopes of this geometry. The results indicated a slight improvement in the slope stability, with factors of safety of 1.59 and 1.55 for a toe and global failure, respectively, in the static case. For a pseudo-static case, these factors of safety decrease to 0.83 and 0.89.

Slope Stability on Proposed Slope Configuration with Timber Pin/Compaction Piles. With this scenario, a 40-foot-wide strip of pin/compaction piles would be installed on the offshore slope face. The piles, 8-inch-diameter timber piles, up to 30 feet long, would be installed in a grid-like pattern, 6 feet on center. The combined soil-timber pile strength is calculated by using the principle of weighted average of the *in situ* soil strength and the timber strength. The results from this analysis show that the factor of safety for the static case is approximately 2.02 for a global failure. For a pseudo-static case, this factor of safety decreases to approximately 1.12. For the post-earthquake case, using soil residual strength, this factor of safety drops further to approximately 0.47. For a failure surface passing through the area of combined soil/pile strength, the factor of safety is well above any minimum target factor of safety.

Slope Stability on Proposed Slope Configuration with Concrete Pier Piles. With this scenario, the presence of the pier concrete piles is taken in account into calculating the soil strength. As with the timber pin/compaction piles scenario analysis, the principle of weighted average is used to calculate the soil

strength, only now the concrete strength is used together with the *in situ* soil strength. The combined soil-pile strength was quite larger with concrete than with timber piles; therefore, only the post-earthquake case was analyzed, since the previous analysis (timber pin/compaction piles) indicated sufficient factors of safety for the static and pseudo-static case. The results from this analysis show that the factor of safety for the post-earthquake case is approximately 0.65. However, this failure surface exits the slope face prior to the pier piles and should, therefore, not impact the pier facility. For a failure surface passing through the area of combined soil/pile strength, the factor of safety is well above any minimum target factor of safety.

Conclusions

The slope stability analyses indicate good stability factors with the presence of pier concrete piles and timber pin/compaction piles. As described previously, using the principle of weighted average of soil-pile strength to calculate a combined strength, the presence of concrete piles precludes any failure surfaces to intersect the pile area and should, therefore, not impact the pier facility. However, this approach does not take into account the potential for the soil mass to flow around the concrete piles, a scenario that could take place due to the relatively long distance between the concrete piles, which is between 12 to 25 feet, according to the preliminary design plans. The concrete piles would then have to sustain passive pressures due to the moving soil mass, which again could potentially overstress the piles, and thereby impact the pier facility. The ultimate approach would be to prevent a failure in the vicinity of the pier concrete piles. This could be achieved by installing timber pin/compaction piles in the space between the concrete piles. Therefore, the following describes general recommendations regarding the timber pin/compaction piles:

- The timber piles should meet or exceed the following requirements:
  - Minimum allowable compressive strength of 1,250 psi parallel to grain;
  - Tip diameter of 8 inches (with a taper of 1-inch per 10 feet of length); and
  - Length of 35 feet.
- Install 8 to 10 piles between concrete pile bents. This will result in a two-pile by four-pile or two-pile by five-pile group beginning at the pierhead line. Center to center spacing of the piles would be approximately 8 feet.

- The City's field engineer/geologist should be present during pile installation to verify that installation is according to plans and specifications.

SITE SEISMIC CONSIDERATION

For seismic design of piles, the seismic design parameters given in Appendix Q of this report were used.

F:\Docs\Jobs\407268\January 2003 DAR Revisions\Appendix V.doc

ATTACHMENT A
FIELD EXPLORATIONS METHODS AND ANALYSIS

ATTACHMENT A
FIELD EXPLORATIONS METHODS AND ANALYSIS

This attachment documents the processes Hart Crowser uses in determining the nature of the soils underlying the project site addressed by this report. The discussion includes information on the following subjects:

- Explorations and Their Location;
- The Use of Auger Borings; and
- Standard Penetration Test (SPT) Procedures.

Explorations and Their Location

Subsurface explorations for this project include TLP-1 and TLP-2. The exploration logs within this appendix show our interpretation of the drilling, sampling, and testing data. They indicate the depth where the soils change. Note that the change may be gradual. In the field, the samples taken from the explorations were classified according to the methods presented on Figure A-1 - Key to Exploration Logs. This figure also provides a legend explaining the symbols and abbreviations used in the logs.

Location of Explorations. Figures 1 and 2 show the location of explorations. In the field, they were located by using a global positioning system (GPS) instrument. The elevation for TLP-1, the offshore exploration, was estimated based on the tide elevation at the start of drilling in addition to 2 feet for the distance to the top of the barge deck. The elevation for TLP-2 was estimated based on the height of surface relative to the tide elevation at the start of drilling. The method used determines the accuracy of the location and elevation of the explorations. The accuracy of the GPS depends on a number of parameters; however, its accuracy is typically within 10 to 20 feet.

The Use of Auger Borings

With depths ranging from 164.5 to 169 feet below the mudline/ground surface, two hollow-stem auger borings, designated TLP-1 through TLP-2, were drilled from 12/16/02 to 12/19/02. The borings used a 3-3/8-inch inside diameter hollow-stem auger and were advanced with a truck-mounted drill rig subcontracted by Hart Crowser. The drilling was continuously observed by an engineering geologist from Hart Crowser. Detailed field logs were prepared of each boring. Using the Standard Penetration Test (SPT) samples were collected at 2-1/2- to 5-foot-depth intervals.

The borings logs are presented on Figures A-2 and A-3 at the end of this appendix.

Standard Penetration Test (SPT) Procedures

This test is an approximate measure of soil density and consistency. To be useful, the results must be used with engineering judgment in conjunction with other tests. The SPT (as described in ASTM D 1586) was used to obtain disturbed samples. This test employs a standard 2-inch outside diameter split-spoon sampler. Using a 140-pound hammer, free-falling 30 inches, the sampler is driven into the soil for 18 inches. The number of blows required to drive the sampler the last 12 inches only is the Standard Penetration Resistance. This resistance, or blow count, measures the relative density of granular soils and the consistency of cohesive soils. The blow counts are plotted on the boring logs at their respective sample depths.

Soil samples are recovered from the split-barrel sampler, field classified, and placed into water tight jars. They are then taken to Hart Crowser's laboratory for further testing.

F:\Docs\Jobs\407268\January 2003 DAR Revisions\Appendix V.doc

ATTACHMENT B
LABORATORY TESTING PROGRAM

ATTACHMENT B
LABORATORY TESTING PROGRAM

A laboratory testing program was performed for this study to evaluate the basic index and geotechnical engineering properties of the site soils. Both disturbed samples were tested. The tests performed and the procedures followed are outlined below.

Soil Classification

Field Observation and Laboratory Analysis. Soil samples from the explorations were visually classified in the field and then taken to our laboratory where the classifications were verified in a relatively controlled laboratory environment. Field and laboratory observations include density/consistency, moisture condition, and grain size and plasticity estimates.

The classifications of selected samples were checked by laboratory tests such as Atterberg limits determinations and grain size analyses. Classifications were made in general accordance with the Unified Soil Classification (USC) System, ASTM D 2487, as presented on Figure B-1.

Water Content Determinations

Water contents were determined for most samples recovered in the explorations in general accordance with ASTM D 2216, as soon as possible following their arrival in our laboratory. The results of these tests are plotted at the respective sample depth on the exploration logs. In addition, water contents are routinely determined for samples subjected to other testing. These are also presented on the exploration logs.

Atterberg Limits (AL)

Atterberg limits were determined for selected fine-grained soil samples. The liquid limit and plastic limit were determined in general accordance with ASTM D 4318-84. The result of the Atterberg limits analyses and the plasticity characteristics are summarized in the Liquid and Plastic Limits Test Report, Figure B-2. This relates the plasticity index (liquid limit minus the plastic limit) to the liquid limit. The results of the Atterberg limits tests are shown graphically on the boring logs as well as where applicable on figures presenting various other test results.

Grain Size Analysis (GS)

Grain size distribution was analyzed on representative samples in general accordance with ASTM D 422. Wet sieve analysis was used to determine the size distribution greater than the U.S. No. 200 mesh sieve. The size distribution for particles smaller than the No. 200 mesh sieve was determined by the hydrometer method for a selected number of samples. The results of the tests are presented as curves on Figures B-3 through B-6 plotting percent finer by weight versus grain size.

F:\Docs\Jobs\407268\January 2003 DAR Revisions\Appendix V.doc

PART IV: RESPONSES TO EPA COMMENTS ON THE TECHNICAL MEMORANDUM

	COMMENTS	RESPONSES
	REVIEW OF CITY OF TACOMA FINAL TRANSLOADING FACILITY SITING EVALUATION (DATED OCTOBER 17, 2002)	
1	Overall the document does a good job of presenting the relevant information. Technically, the Simpson site appears potentially viable. Further evaluation of the existing pier at Terminal 7 is recommended.	The Sediment Transloading Facility Siting Evaluation memorandum concluded that the Simpson site is clearly the most viable and promising for the transfer of large quantities (greater than 500,000 cy) of waterway sediments. While the pier at Terminal 7 is available it is inadequate for direct barge to rail off-loading operations, as much of the area surrounding the rail line is consumed by other Port of Tacoma operations. Based on recent discussions with the Port, insufficient storage area (i.e., significantly less than the 2-acre minimum requirement) is available at Terminal 7 for required rail car holding. Excessive site traffic and operational conflicts are also significant impediments at this site, and render Terminal 7 problematic. Based on this analysis, further evaluation of the existing pier at Terminal 7 is unnecessary. See Comment #2 below.
2	Page 4, Item 6. Discuss how many cars would need to be stored and how many cars make up a train. How many linear feet of siding are required?	As discussed in the memorandum, a 5,000 to 6,000 ton per day throughput rate is necessary to support the Thea Foss / Wheeler-Osgood Waterway cleanup project. Regional rail operators have stated that they could cost-effectively accommodate a maximum of one train per day leaving the site. Since each container car can hold up to 34 tons of material and measures roughly 72 feet in length (hitch-to-hitch), approximately

	COMMENTS	RESPONSES
		2 to 2 ½ linear miles of siding would be required for just a single day of transloading operations. Additional siding would be needed to accommodate potential interruptions in rail service. Again, while the Simpson facility can accommodate these requirements, sites such as Terminal 7 have insufficient storage capacity and significant conflicts with other ongoing operations, such that they would not be able to reliably support the required transloading throughput rates.
3	Page 6, Item 3. For direct loading into lined containers, much of the storage space could be provided at a nearby, offsite location as opposed to directly adjacent to the transloading pier. For example, fill up roughly eight cars on site in an hour, and then transfer them by rail to a nearby holding area to build a train. Pull-through access would facilitate this option.	While this option may be feasible, there are uncertainties regarding direct loading with regards to control of process waters and prevention of spillage. While BMPs can be implemented to regulate these activities, there would most likely be an impact on production, time, and ultimately costs. Access to such offsite siding locations and avoidance of conflicts with other ongoing operations are key considerations that determine implementability as well. See response to Comment #2 above.
4	Page 8, 2nd full paragraph. The first sentence should be supported with further explanation. Explain why two cranes working on a barge could not load directly into rail cars at the design production rate, but could directly load containers as presented in Option b) on page 29.	While this concept is feasible, discussions with regional contractors revealed that there could likely be considerable operational conflicts and associated inefficiencies associated with having two cranes working simultaneously from a barge. As discussed in the referenced MUDS document, a more implementable and cost-effective solution would be to provide a barge pier with at least 2 acres of adjacent sediment and/or container storage capacity to allow for efficient off-loading into rail cars.

	COMMENTS	RESPONSES
5	Page 8, 3rd full paragraph. It would be useful to mention, here or elsewhere, who would be responsible for moving rail cars on the rail lines and building the trains.	The Contractor, working with personnel from the selected disposal facility, would be responsible for moving the rail cars and building the trains.
6	Page 12, last sentence. Explain what concerns over tidal fluctuations affect this site but not others.	Tidal fluctuations are a concern for this property since they extend into the useable (upland) property, as described on Page 11, paragraph 6. Re-grading of the upland property would thus be required.
7	Page 14, 1st full sentence. The current design for the Middle Waterway includes a dredge slope cutback in this area to about the -14 MLLW contour. The city should further investigate this possible conflict in the structure location. Further, the Middle Waterway dredging will occur immediately adjacent to the structure, possibly impacting the barge offloading operations. Please evaluate and discuss.	The preliminary design of the pier structure and piling assumed the dredge and cap design presented on Figures 1-4 and 1-5 of the "Pre-Final Design Submittal Areas A and B for the Middle Waterway Problem Area of the CBN/T Superfund Site, Tacoma, Washington" dated October 16, 2002. We understand that no substantive modifications are included in the final design. Based on discussions with MWAC, dredging and capping operations adjacent to the pier can be effectively coordinated and sequenced with transloading operations.
8	Page 15, Conclusions. The rejection of this site based on the need to directly load into rail cars is not adequately supported. Explain why the cars cannot be loaded, pulled through, and stored at a nearby location for assembly into trains (see comments on pages 6 and 8).	See response to Comment #3.
9	Page 20, last paragraph. What are the concerns about introducing contaminated sediments to a contaminated site? Presumably the City is not planning to further contaminate any site with the loading operations.	While the City intends to use BMPs while transferring sediments to rail cars, there is a potential of a release during the project. If an accidental release occurs on a clean site, the City would be completely responsible for the clean up of the site. However, if a release

	COMMENTS	RESPONSES
		occurs on a previously contaminated site and the City's contaminated sediments are commingled with existing contamination, the cleanup would depend on the negotiation of the parties responsible for the contamination – the City and the property owner.
10	Page 28, 2nd bullet. Given the proposed configurations in Figure 3 and the bathymetry at the peninsula tip, it appears that the shaded area will definitely occur landward of the -4 feet MLLW contour.	Comment noted. The estimated impact of the preliminary configuration on the area landward of elevation –4 feet MLLW is presented in Section 6.2 of the DAR.
11	Page 29 first sentence. Option b) is presented as a viable option, whereas elsewhere direct clamming into rail cars is not. Please elaborate on the distinction, particularly as this is the basis for rejecting Terminal 7.	See response to Comment #4.
12	Page 31, first paragraph. The ability to directly discharge to the sewer should be confirmed with the POTW (chemical concentrations, flow rates, potential for solids to foul sewer lines, etc.) In general, flows should be estimated (during the rainy season) and example treatment system layouts presented to further define the feasibility of treating the water on site.	Based on recent project experience (Olympic View Resource Area) where effluent from dewatered dredged material was pumped into Baker tanks prior to discharge to the City's POTW, we believe effluent from the Thea Foss sediments is suitable for discharge into the POTW. BMPs would be used to prevent solids from entering the sewer lines, and the volume of water generated over the course of the project would not be a problem for the City's sewer capacity. If the Upland disposal option is selected, the City and Contractor, will provide EPA with a detailed treatment system and analysis of the anticipated effluent quality and volumes.

	COMMENTS	RESPONSES
13	Figure 2. The required 180' projection of the pier appears to require the pier to be located at the very tip of the peninsula. Please revise with a shaded area consistent with the proposed dimensions.	The location of the pier is presented on Figure 3 of Part II of the Appendix.
	REVIEW OF CITY OF TACOMA UPLAND DISPOSAL FACILITY DESIGN MEMO (DATED DECEMBER 16, 2002)--THEA FOSS AND WHEELER OSGOOD REMEDIATION	
14	**General**. A preliminary evaluation of the logistics of the rail car operations should be developed as early as possible, to confirm the feasibility of this site.	See response to Comment #2.
15	**General**. The City shall provide responses to EPA's comments on the City's October 17, 2002 Siting Report on or before it submits the final (35% design) Upland Disposal design. Note: henceforth in the comments "final design" refers to the next submittal of the upland disposal design that will be submitted on January 24, 2003.	See responses to Comments #1 through #13.
16	**General**. The objective of this report is to expand on the upland disposal analysis in Section 6 and Appendix V of the DAR by providing "a conceptual pier design, future design activities to be completed, an ARAR analysis for the structure, habitat considerations, and affirmative conservation measures for the Upland Disposal Option." In many sections of the ARAR analysis, the upland disposal option is contrasted with the CDF disposal option. While many of these comparisons are interesting, it would seem to be more appropriate to make many of these comparisons in a different section, such as "Evaluation of Disposal Options" which is typically done in a feasibility study and use the ARAR section to demonstrate strictly how the upland disposal option meets the laws and regulations.	Sections of this document relating to the CDF disposal option and associated mitigation will be moved to Section 6 of the Design Analysis Report (DAR) along with additional detail on the Upland option. Section 6 of the DAR will also include a new section on the "Comparative Analysis of the Disposal Options" per EPAs request.
17	**General.** In the final Upland Disposal design a section on public input/notification should be included and discuss how the substantive	A new paragraph in Section 1 will address public notification and input and explain how the substantive

	COMMENTS	RESPONSES
	elements of a Corps permit will be met while this option is developed as part of the CERCLA process. EPA intends to hold a public notification process for thirty days beginning in mid-January 2003 in which this document and EPA's comments and Appendix V and EPA's comments will be available for review.	elements of a Corps 404 permit will be met in the CERCLA process.
18	**Page 2, Section 2.0.** At a meeting on December 16, 2002 with EPA and other participants, the City stated that some elements of the final design would be taken to the 90% level in order to get more accurate bids from responding contractors. Please note which elements these are in the final revised design.	Comment noted. Text will be revised to note the new plans, Drawing Nos. S-23 through S-32.
19	**Page 3, Section 2.0.** A draft schedule for the upland disposal option shall be included in the final design. In addition, a schedule is needed that identifies how the upland disposal option would be finalized if it were ultimately selected by the City as the final disposal option. It is unclear from the narrative in the last paragraph if there are sufficient review times.	Comment noted. A project schedule will be included in the Appendix which shows the schedule for completion of the design, review periods for EPA and the resource agencies, and anticipated approval dates. Project schedules for the implementation of the remedy were previously developed and are presented on Figures 9-3 and 9-4 of the DAR. These schedules assume a reasonable start date of August 15, 2003.
20	**Page 4, 4th bullet**. Since the facility will only be partially designed, clarify the degree to which water handling/treatment/sampling will be developed in the final plans and specifications. State that all accumulated water will be colleted and treated as necessary before being discharged.	Text revised to note that all water generated from the barges and operational areas will be collected, treated and discharged according to the standards per Section 401 of the CWA and per Chapter 12.08 of the Tacoma Municipal Code. If the Upland Disposal Option is selected, the City will work with the selected Contractor to develop a 'Water Conveyance, Treatment, and Discharge Plan'. This Plan would address the materials, equipment and labor

	COMMENTS	RESPONSES
		necessary to handle effluent water from the barges and operational areas. It would also describe the testing/sampling requirements and include the decision framework for discharge of the treated effluent.
21	**Page 6, Section 2.3, 3rd paragraph**. Please add more information on how storm flows from 4 acres will be collected and treated (e.g., average and peak flows, storage needed, treatment system throughput, need for lift stations, etc.). Define "pretreatment."	See response to Comment #20.
22	**Page 7, Section 2.3, last sentence**. Define the operating railroad.	The operating railroad is BNSF. Text revised.
23	**Page 7, Section 2.4, 3 bullets**. Do any of the options require modifications to the proposed pier configuration in Figure 1?	We don't believe so. If this option is selected, the Contractor will work with the City and propose a handling operation. The City and Contractor would then discuss if any temporary modifications to the pier configuration would be needed augment the operation.
24	**Page 9, Future Reuse, 4th bullet.** The peninsula has a cap (12-18") of small wood debris presumably from previous operations conducted on site. State whether this wood will remain on site and if so, any impacts that it may have to the habitat anticipated to be planted at this location. Also, planting native vegetation should not be limited to a single type (e.g., willow), in order to prevent disease or insects occurring in a monostand. Native plantings should include a variety of different species.	Soil amendments will be provided as necessary to support growth of riparian plantings. A variety of native species that have been proven successful in other Middle Waterway riparian plantings will be used, including red alder and shore pine.
25	**Page 9, Future Reuse, fifth paragraph.** This paragraph should address the neo-delta reserve plan that, according to Citizens For A Healthy Bay, has formed the core of habitat restoration efforts in Commencement Bay and seeks to provide a continuous habitat corridor from the mouth of the Puyallup River to the mouth of the Thea Foss Waterway. A	The criteria for the restoration efforts in Commencement Bay presented in the ESD are discussed in Section 6.

	COMMENTS	RESPONSES
	discussion of this plan should be incorporated into the City's final Upland Disposal design submitted in January 2003.	
26	**Page 10, Section 3.0, last sentence.** Add "and wildlife" to the end of the last sentence.	Comment noted. Text revised.
27	**Page 12, Section 3.3.1, first paragraph**. What bank excavation is planned in TFWW?	Based on the Thea Foss Waterway site visit with the resource agencies on December 19, 2002, excavation of small 'upland bank' areas will be performed just south of Johnny's Dock Restaurant and on the western shoreline adjacent to the Glass Museum.
28	**Page 13, Section 3.3.2., last paragraph.** While leaving the pier in place will indeed avoid the disruption to the Middle Waterway Corridor habitat area and to the Middle Waterway the disruption of removing this pier would be relatively short-term compared to the long-term impact on habitat of leaving this pier in place in perpetuity.	The pier was designed to avoid long-term impacts on habitat by minimizing shading along the existing shoreline. Improvements in the shoreline substrate and habitat considerations during the design of the pier result in no significant long-term impacts.
29	**Pages 13 through 15, Sections 3.3.3 through 3.3.5.** These sections are confusing and read in conjunction with Tables 1- 4 do not paint a clear picture of what the mitigation is for only the upland disposal option and how this compares/contrasts with the mitigation for the CDF option. The City needs to provide a clearer picture (including) total mitigation values, for each of these options. For example, when adding the losses in Section 3.4.1.1 and adding the mitigation/affirmative conservation measures in the same section the sum of each section is 1.02 acres and 6.99 acres respectively for a total of 5.97 acres. However, the totals provided on Table 2 and Table 3 are 0.03 acres and 3.77 acres respectively. And there is "a net gain of 2.58 acres of productive littoral habitat" identified in the last bullet on page 16. It appears that the number in this section should match one of these tables or figures.	As was pointed out in the November 21, 2002 habitat meeting, the nature of impacts considered and mitigation/ conservation measures provided is highly varied and dictate the level of complexity described and shown on the tables. For example, the 1.02 acres summed in the comment, includes three different types of impacts: shallow water shading, deep water shading, and habitat loss to filling. Tables 2 and 3 will be clarified and the text will be revised in Section 6 to further clarify these distinctions and fully identify each number. Net gain of 2.58 acres of littoral habitat is provided in Table 2. Narrative in Section 6.4.3 of the DAR clarifies

	COMMENTS	RESPONSES
	Additional clarification of Section 3.3.4 should be provided. Table 2 regarding the Peninsula states "enhance littoral function" and "excavate/restore historic function" but the narrative in this paragraph does not discuss these features. In addition, it is not clear to EPA why the Middle Waterway Marsh and Mudflat mitigation efforts that are included in the CDF mitigation package are not included in the upland disposal option. After the mitigation numbers are more clearly presented, it will likely demonstrate that the City's efforts are acceptable in providing for the impact of pier installation. However, the affirmative conservation measures do not appear to be accounted for–these measures should be specifically identified.	what activities constitute enhancement. The Middle Waterway Marsh and Mudflat habitat area is an excavation of 6.9 acres of new aquatic habitat as part of the compensation package for the filling of the St. Paul Waterway which would be eliminated 11.05 acres of existing habitat. No such loss would result from the upland disposal option.
30	**Page 16, Section 2.4.1.3.** While the NOAA Habitat Equivalency Analysis is interesting, EPA will be using EPA's mitigation ratio in order to determine the adequacy of the mitigation measures for this project.	Comment noted. NOAA's HEA analysis presented for informative comparison. See Section 6.5 of the DAR.
31	**Page 15, Section 3.4.1.1. 1st bullet.** The 0.23 acres shaded only appears in a footnote to Table 2 and was apparently subtracted from another number that only appears in a footnote. The 0.19 acre figure does not appear in Table 2. 2nd bullet: the 0.6 acre figure does not appear in Table 2. Overall Table 2 is confusing.	See Comment #29 and revised table 2 (now 6-2 in the DAR). A footnote (3) clarifying where the 0.23 acres shows up in Table 2 was inadvertently omitted.
32	**Page 22, Section 4.1.1.1, 1st bullet**. Apparently sampling and analysis of the effluent will be required – who will develop the plans and when? Also, reference is made here to the City POTW, earlier reference was made to Simpson clarifiers. Define the acceptance criteria for these two facilities (what flows and concentrations can they accept) and clarify if both are potential treatment options. Under the 404 discussion, EPA has outstanding comments on siting that need to be addressed to document that avoidance has been attempted to the extent practicable. Same comment applies to penultimate paragraph on p.23.	See response to Comment #12.

	COMMENTS	RESPONSES
33	**Page 24, first paragraph.** Does the last sentence of this paragraph imply that the log haul out facility could not be used by Simpson until the CDF is ultimately constructed. EPA is unsure of the connection between the use of this facility and completing the disposal facility.	Text revised to clarify that the log haul-out facility would be used both during and after implementation of the CDF remedy.
34	**Page 30, section 4.1.2.3, 2nd paragraph**. Provide a reference to DNR's decision making criteria. Last bullet, define what a "truly hazardous material" is and why sediments exceeding MCULs qualify as such.	Based on our understanding, DNR is no longer adhering to the decision making criteria regarding the issue of "truly hazardous" material on State-owned lands. Therefore, this bullet and reference will be removed from the text.
35	**Page 39, Section 5.0, criteria 1-9.** Since this is a report on the Upland Disposal Option, it is unclear why criteria 1, 4, 5 and 6 discuss the impacts or value derived from the CDF. Please clarify why this section is not exclusive for the Upland Disposal Option.	Discussion of the CDF disposal option will be moved to Section 6 of the DAR.
36	**Table 1**. RA6 shows a conversion of 0.49 acres from littoral to sublittoral. Sheet C-9 of the design seems to show a small area in the SW corner of RA6 where this might be occurring, but the sections on Sheet C-14 do not show any part of RA6 that was initially above -10. Confirm the 0.49 acre figure is correct and resolve the apparent discrepancy in the location of the RA6/RA8 boundary on sheets C-9 and C-14.	Comment noted. The boundary between RA 6 (channel area) and RA 8 (slope area) will be adjusted on the plan view (Sheet C-9), to show the boundary as the approximate toe of the slope per Sheet C-14. The habitat acreages are calculated based on the plan view (boundary as on existing Sheet C-9), so in essence, a portion of the acreage attributed to RA 6 is in fact in RA 8 (on the slope).
37	**Table 2**. Clarify of the numbers provided in this table is necessary. It appears that the lower rows should have a header such as "type of action affecting habitat" and that these numbers are a different breakdown of the numbers in the "Total" row. What is the source of the 0.03 enhanced acres?	Table and text have been modified to clarify.
38	**Table 4**. State in the title that this table is for the CDF.	Comment noted. Table will be moved from this appendix to Section 6 of the DAR.

	COMMENTS	RESPONSES
39	**Tables 1, 4, 5 and 6.** Eventually, these tables shall be provided as errata sheets to the DAR and not included solely in this document. Over time these tables are likely to be "lost" to the general reader of this design as they are related to the CDF but are in a document entitled, "Upland Disposal Facility Design and Habitat Considerations." These tables can remain in this document for use as a comparison with upland disposal mitigation values, but should also be included in Section 6 of the final DAR.	Comment noted. Relevant tables from this document (as modified for clarification) will be included in the revised Section 6 of the DAR.

F:\Docs\Jobs\407268\January 2003 DAR Revisions\Appendix V Comment Resposes.doc