STORMWATER INTERIM REMEDIAL MEASURES WORK PLAN

Arkema Portland Facility
Portland, Oregon

Prepared for

Arkema, Inc.
6400 NW Front Avenue
Portland, OR 97210

Prepared by

integral consulting inc.

12303 Airport Way, Suite 370
Broomfield, CO 80021

May 2006

STORMWATER INTERIM REMEDIAL MEASURES WORK PLAN

Arkema Portland Facility, Portland, Oregon

Prepared for

Arkema Inc.
6400 NW Front Avenue
Portland, OR 97210

Prepared by

integral consulting inc.

12303 Airport Way, Suite 370
Broomfield, CO 80021

May 2006

TABLE OF CONTENTS

LIST OF FIGURES ..... **III**

ACRONYMS AND ABBREVIATIONS ..... **IV**

1. INTRODUCTION **1**
- 1.1 BACKGROUND 1
- 1.2 WORK PLAN FRAMEWORK 2
- 1.3 REPORTING 3

2. STORMWATER SAMPLING **4**
- 2.1 MONITORING LOCATIONS 4
- 2.2 SAMPLING FREQUENCY 4
- 2.3 SAMPLE COLLECTION 4
- 2.4 ANALYTICAL PARAMETERS 5
- 2.5 FIELD QUALITY CONTROL SAMPLES 5
- 2.6 INVESTIGATION-DERIVED WASTE 6

3. CATCH BASIN SEDIMENT SAMPLING **7**
- 3.1 SAMPLING LOCATIONS 7
- 3.2 SAMPLE COLLECTION 7
- 3.3 ANALYTICAL PARAMETERS 8
- 3.4 FIELD QUALITY CONTROL SAMPLES 8
- 3.5 INVESTIGATION-DERIVED WASTE 8

4. SITE TOPOGRAPHY **9**

5. BEST MANAGEMENT PRACTICE ENHANCMENTS **10**
- 5.1 REPLACING FILTER SOCKS 10
- 5.2 REPLACING BIOFILTER BAGS 10

6. OPTIONAL SAMPLING **11**
- 6.1 PARTICLE SIZE ANALYSIS 11
- 6.2 SURFACE SOIL SAMPLING 11

7. STORMWATER FOCUSED FEASIBILITY STUDY **13**
- 7.1 FOCUSED FEASIBLITY STUDY CONTENTS 13
- 7.2 PRELIMINARY IDENTIFICATION OF STORMWATER TREATMENT ALTERNATIVES 14

8. REFERENCES **16**

LIST OF FIGURES

Figure 1. Outfall and Catch Basin Sampling Locations

ACRONYMS AND ABBREVIATIONS

Arkema	Arkema, Inc.
BMP	Best Management Practice
COI	constituent of interest
DEQ	Oregon Department of Environmental Quality
DI	De-Ionized
EPA	U.S. Environmental Protection Agency
FS	Feasibility Study
HASP	Health and Safety Plan
JSCS	Joint Source Control Strategy
Plant Site	Arkema, Inc., Portland, Oregon, Facility
QAPP	Quality Assurance Project Plan
QA/QC	Quality Assurance/Quality Control
SCR	stormwater characterization report
SLV	screening level value
SWFFS	Stormwater Focused Feasibility Study
TSS	total suspended solids

1. INTRODUCTION

This work plan has been prepared to identify the approach designed to address constituents of interest (COIs) detected in stormwater at the Arkema, Inc. (Arkema), Portland, Oregon Facility (Plant Site). Further, this plan presents the results of the screening of data from the Stormwater Characterization Report (Appendix A) which identified the COIs. The approach discussed herein, will be carried out in a phased approach beginning with an initial (post demolition) analysis of the identified COI's. Following this baseline analysis effort, existing Best Management Practices (BMPs) will be enhanced and COIs will be subsequently re-evaluated. The results of this initial evaluation will be used to determine if a more rigorous Stormwater Focused Feasibility Study (SWFFS) is warranted or if the enhanced BMPs are adequate.

This plan details the proposed stormwater and catch basin sediment sampling activities as well as an optional particle size analysis. Also, Best Management Practices (BMPs) are identified that will be implemented/enhanced at the Plant Site to reduce COIs concentrations in stormwater during the initial evaluation effort. In addition, this plan outlines surface soil sampling that will be conducted to evaluate potential stormwater treatment alternatives.

This plan outlines the proposed SWFFS should it become necessary. It also provides a detailed description of sample collection and handling procedures, analytical methods, and quality assurance/quality control protocols. Health and safety provisions will be presented in a separate Health and Safety Plan (HASP) as an addendum to this work plan.

1.1 BACKGROUND

The Plant Site was issued a new National Pollutant Discharge Elimination System stormwater discharge permit by the Oregon Department of Environmental Quality (DEQ) on January 22, 2004. The permit was issued for the discharge of stormwater runoff from the Plant Site. Stormwater runoff has the ability to erode any exposed dirt or soil, thus entraining particulates (suspended solids) within the stormwater flows. If these particulates contain COIs, the COIs will become entrained within the stormwater flow. Furthermore, cracked or structurally defective storm sewer pipes, if present, could act as a point of entry and conduit for subsurface COIs to the sewer discharge point. Thus, as a condition of the permit, Arkema was required to conduct a stormwater characterization for legacy and 303(d) constituents for a 1-year period. On May 18, 2005, Arkema submitted a stormwater characterization report (SCR) to DEQ in compliance with its permit (Arkema 2005).

Analytical results from the SCR were screened against screening level values (SLVs) set forth by DEQ and the U.S. Environmental Protection Agency (EPA) in the Portland Harbor Joint Source Control Strategy Document (JSCS, DEQ and USEPA 2005). The results of this screening are provided in Appendix A. Based on this screening, COIs that have been detected in stormwater at the Plant Site include:

- Perchlorate;
- Manganese;
- Hexavalent Chromium;
- 4,4'-DDE;
- 4,4'-DDD, and
- 4,4'-DDT.

1.2 WORK PLAN FRAMEWORK

This Work Plan proposes the following phased approach to address COIs in stormwater at the Plant Site:

1. Stormwater sampling of Outfalls 001, 002, 003, and 004 in May 2006 (Figure 1). Stormwater samples will be analyzed for both total and dissolved phase stormwater COIs and total suspended solids (TSS), and stormwater flow rate will be estimated. This sampling would help assess whether demolition activities were a major source of COI mass to stormwater and establish post-demolition COI concentrations in stormwater.
2. Inspection of all catch basins and limited sampling of catch basin sediments captured by the currently installed filter socks (20 percent of all catch basins within each drainage basin will be sampled, locations are indicated in Figure 1). Catch basin sampling will focus on those catch basins that are proposed to be retained in a sewer abandonment and reconstruction scenario[1] and those areas that are suspected sources of COIs to stormwater. This sampling will help assess whether COIs are attributable to surface or non-surface sources and where surface contamination may be entering the storm sewer system.
3. Enhancements of currently installed BMPs will include, but may not be limited to, replacing filter socks and biofilter bags that are currently in place.
4. After BMP enhancements are implemented, two additional monthly rounds of stormwater sampling will be conducted in June and July 2006. Stormwater samples will be analyzed for both total and dissolved phase stormwater COIs and TSS, and stormwater flow rate will also be measured (via a flow meter). This sampling will help assess effectiveness of the BMP enhancements. Also, comparison of the total and dissolved phase constituents will help assess whether COIs are within the solid phase or aqueous phase. Finally, comparison of COI concentrations to measured TSS and flow rate will help further assess sources of COIs in stormwater.
5. Plant Site topography will be established. Topography will be established so that drainage basins for each individual catch basin can be identified. This information will also assist in the assessment of IRM alternatives.

[1] One potential alternative for addressing COIs in stormwater at the Plant Site is the replacement of the majority of the current, deep storm sewer system with a shallow storm sewer system.

6. Optional particle size analysis of TSS. If it appears that enhancing BMPs will not adequately address COIs in stormwater, a particle size analysis of TSS in stormwater may be conducted on samples collected during the July 2006 sampling event. This analysis will allow for proper sizing of treatment systems to address stormwater COIs. Conducting this analysis will also be dependent on the comparison of total and dissolved phase COI concentrations in stormwater.[2]
7. Optional surface soil sampling may be conducted pending the results of the catch basin sampling and as part of addressing data gaps identified in the upland remedial investigation (ERM 2005) to assist in developing the upland feasibility study.

Once sampling is complete, and if enhancing currently installed BMPs is not effective at addressing stormwater COIs, a Stormwater Focused Feasibility Study (SWFFS) would be proposed to determine the most feasible alternative to implement at the Plant Site. Interim stormwater remedial measures to be assessed would include:

- Alternatives for above ground sources of COIs to stormwater:
  - Enhanced infiltration of stormwater to the extent practical.
  - Surface treatment of stormwater to the extent practical.
  - Capping and/or hydro-seeding of the Plant Site.
  - A combination of the above three measures, including enhanced infiltration to the extent practical, surface treatment of as much of the remaining stormwater as possible, and capping/hydro-seeding of any remaining areas.
- Alternatives for below ground sources of COIs to stormwater:
  - Sewer abandonment and reconstruction.
  - Sewer cleaning and lining.
- The SWFFS will include consideration of end-of-pipe or in-pipe treatment alternative as a potential final site remedy for stormwater. Thus, interim remedial measures would be evaluated on their ability to enhance or hinder the implementation of the final site remedy.

1.3 REPORTING

Upon completion of three rounds of stormwater sampling and catch basin sediment sampling, a data summary report will be provided to DEQ. This report will include an evaluation on the effectiveness of the BMPs as well as a recommendation for optional sampling, including surface soil sampling. If necessary, an additional data summary report summarizing the results of surface soil sampling will be provided to DEQ. Also, if necessary, a stormwater focused feasibility study will be provided to DEQ.

[2] If COIs are determined to be in the aqueous phase in stormwater, then a particle size analysis would not be conducted.

2. STORMWATER SAMPLING

Three rounds of stormwater samples will be collected at Outfalls 001, 002, 003, and 004. Stormwater samples will be analyzed for both total and dissolved phase stormwater COIs and TSS, and stormwater flow rate will also be estimated. The initial stormwater sampling event will be conducted to help assess whether demolition activities were a major source of COI mass to stormwater and establish post-demolition levels. The subsequent two stormwater sampling events will be conducted after enhancement of BMPs to help assess effectiveness of the BMP enhancements. Also, comparison of the total and dissolved phase constituents will help assess whether COIs are within the solid phase or aqueous phase. Finally, comparison of COI concentrations to measured TSS and flow rate will help further assess sources of COIs in stormwater.

2.1 MONITORING LOCATIONS

Stormwater samples will be collected at Outfalls 001, 002, 003, and 004, shown in Figure 1. Outfalls will be accessed at the Parshall Flumes located hydraulically upgradient of the ultimate discharge of each outfall. The outfalls will be sampled in accordance with the Outfall Water Sampling Standard Operating Procedure (SOP-2, Appendix C). Additional samples may be collected from upstream manholes if deemed necessary.

2.2 SAMPLING FREQUENCY

An initial, post-demolition baseline sampling will be conducted prior to enhancing Best Management Practices. Approximately one to two months after BMP enhancements, two sampling events will be conducted. It is anticipated that the initial sampling will be occur in late May 2006, with subsequent sampling conducted in June 2006 and July 2006.

2.3 SAMPLE COLLECTION

Prior to collecting each sample, the sampling equipment (sampling pole, etc.) will be decontaminated by the procedures outlined in the Standard Operating Procedure for Equipment Decontamination (SOP-9, Appendix C). Field activities will be documented in accordance with the Standard Operating Procedure for the Site Logbook (SOP-8, Appendix C).

Stormwater samples will be collected in accordance with the Standard Operating Procedure for Outfall Water Sampling (SOP-2, Appendix C). Sampling will, first, involve accessing the outfall. After accessing the outfall, the flow rate will be estimated in accordance with the Standard Operating Procedure for Measurement of Flow Rate in Outfalls (SOP-3, Appendix C) by estimating

the amount of time required for the stormwater to fill a given volume (a drop structure at the inlet of the Parshall Flumes located at each outfall)[3].

After measuring the flow rate, sample collection will involve obtaining representative samples of the outfall water using a clean sample-collection bottle and submersing the sample bottle in water, mouth point upstream and below the water surface using a sampling pole (e.g. swing sampler). Samples for dissolved constituent analysis will involve collecting the sample in a new, laboratory-supplied unpreserved sample bottle, and then transferring the water to a hand pump filtration apparatus for field filtration. Filtered samples will be obtained using a disposable 0.45-μm cartridge filter. After filtration, the water will be transferred to the appropriate sample bottles.

Each sample collected in the field will be labeled in accordance with the Standard Operating Procedure for Sampling Labeling (SOP-5, Appendix C). Samples will be managed according to the protocols described in SOP-6, Standard Operating Procedure for Shipping and Handling of Samples (Appendix C), and SOP-7, Standard Operating Procedure for Sample Custody (Appendix C), as well as the Quality Assurance Project Plan (QAPP; Appendix B).

2.4 ANALYTICAL PARAMETERS

Stormwater samples from each outfall will be collected and analyzed for total suspended solids (TSS). Also, samples from each outfall will be collected and analyzed for the following constituents:

- Perchlorate, only unfiltered (total)[4] samples will be collected.
- Manganese, both unfiltered and filtered (total and dissolved) will be collected.
- Hexavalent Chromium, only unfiltered (total)[4] will be collected.
- 4,4'-DDE, both unfiltered and filtered (total and dissolved) will be collected.
- 4,4'-DDD, both unfiltered and filtered (total and dissolved) will be collected.
- 4,4'-DDT. , both unfiltered and filtered (total and dissolved) will be collected.

2.5 FIELD QUALITY CONTROL SAMPLES

As described in the QAPP (Appendix B), one set of Quality Assurance/Quality Control (QA/QC) samples will be collected for each stormwater sampling event. This will consist of:

- One field duplicate,

[3] Because the Parshall Flumes were designed to measure much higher flowrates, these flumes have a water flow that is less than ¼" deep and in most cases does not even span the width of the flume under normal storm conditions. Thus, these flumes cannot be used to measure flow.

[4] Only total samples will be collected for perchlorate and hexavalent chromium because they will only be found in the aqueous phase of the stormwater flows due to their very high solubility in water.

- One filtered equipment blank (DI water rinsed over decontaminated sampling equipment and pumped through a clean 0.45-μm filter to a sample bottle with preservative),
- One unfiltered equipment blank (DI water rinsed over decontaminated sampling equipment and poured into a sample bottle with preservative), and
- One DI water blank (DI water poured directly into a sample bottle with preservative).

QA/QC samples will be prepared in accordance with the Standard Operating Procedure for Quality Control Sample Preparation (SOP-10, Appendix C).

2.6 INVESTIGATION-DERIVED WASTE

All investigation-derived waste (e.g. decontamination water, etc.) will be handled in accordance with the Standard Operation Procedure for Investigation-Derived Waste Handling (SOP-11, Appendix C).

3. CATCH BASIN SEDIMENT SAMPLING

After the initial outfall water sampling event, all catch basins will be inspected as part of the catch basin sampling effort. In addition to inspection, samples of sediment will be collected from the filter socks of approximately 20 percent of the catch basins at the Plant Site and analyzed for stormwater COIs. This sampling will aid in the assessment of whether COIs are attributable to surface or non-surface sources and where surface contamination may be entering the storm sewer system. Although filter socks were in place during all demolition activities conducted at the Plant Site, new filter socks were installed in most catch basins after the completion of demolition.

3.1 SAMPLING LOCATIONS

Sediment samples will be collected from 20 catch basins as shown on Figure 1. Based on the inspections of the catch basins the location of samples may be moved due to the lack of retained sediment in a proposed sampling location. Additionally, if inspections indicate that both a filter sock and an associated biofilter bags have retained an inordinate amount of particulates, a location that was not originally proposed to be sampled may be sampled. Sample locations may also be moved if it is determined, by inspection, that the proposed sample location drains a small area.

3.2 SAMPLE COLLECTION

Prior to sampling, all of the catch basins at the Plant Site will be inspected. Information such as the general condition of the catch basin and installed filter sock, the amount of sediment retained in the filter sock, the ability for sediment to by-pass the filter sock, whether the catch basin has an associated biofilter bag, and the condition of the bag will be documented, along with all field activities associated with sampling, in the site logbook according to the Standard Operating Procedure for the Site Logbook (SOP-8, Appendix C).

Catch basin samples will be collected in accordance with the Standard Operating Procedure for Catch Basin Sediment Sampling (SOP-1, Appendix C). The sampling will involve collecting representative samples of the sediment from five locations using a clean stainless spoon, scoop or trowel, combining the samples in a stainless steel mixing bowl, and then filling the appropriate sample container from this composite. Each sample collected in the field will be labeled in accordance with the Standard Operating Procedure for Sample Labeling (SOP-5, Appendix C).

Before collecting each sample, sampling equipment (e.g. stainless steel spoon, scoop or trowel, mixing bowl, etc.) will be decontaminated by the procedures outlined in the Standard Operating Procedure for Equipment Decontamination (SOP-9, Appendix C). Samples will be managed according to the protocols described in SOP-6, Standard Operating Procedure for Shipping and Handling of Samples (Appendix C), and SOP-7, Standard Operating Procedure for Sample Custody (Appendix C), as well as the QAPP (Appendix B).

3.3 ANALYTICAL PARAMETERS

Sediment samples from the designated catch basins will be collected and analyzed for the following constituents:

- Perchlorate
- Manganese
- Hexavalent Chromium
- 4,4′-DDE
- 4,4′-DDD
- 4,4′-DDT.

3.4 FIELD QUALITY CONTROL SAMPLES

As described in the QAPP (Appendix B), one set of QA/QC samples will be collected for catch basin sediment sampling event. This will consist of:

- One field duplicate,
- One filtered equipment blank (DI water placed in the stainless steel mixing bowl and pumped through a clean 0.45-μm filter to a sample bottle with preservative),
- One unfiltered equipment blank (DI water placed in the stainless steel mixing bowl and poured into a sample bottle with preservative), and
- One DI water blank (DI water poured directly into a sample bottle with preservative).

QA/QC samples will be prepared in accordance with the Standard Operating Procedure for Quality Control Sample Preparation (SOP-10, Appendix C).

3.5 INVESTIGATION-DERIVED WASTE

All investigation-derived waste (e.g. decontamination water, etc.) will be handled in accordance with the Standard Operation Procedure for Investigation-Derived Waste Handling (SOP-11, Appendix C).

4. SITE TOPOGRAPHY

Existing sources of mapping information will be researched to establish existing site topography (e.g. Portland area metropolitan service district). However, if no adequate source is available, a professional land surveyor licensed in the state of Oregon will conduct a topographical survey of the site. The surveyor will acquire field topographic (cross sections or random topo) and planimetric information (buildings, roads, parking areas, sidewalks, fence lines, structures, drainage, etc.) to be used for 40 scale mapping with a one (1) foot contour interval. Density of field elevations will support 1″ = 40′ mapping and will be provided as necessary to show all breaks in grade or changes in terrain. All elevations will be taken to the hundredth of a foot. The surveyor will record all data in the field book, which will include, at a minimum, setups, backsights, measure ups, shot numbers, and shot descriptions.

5. BEST MANAGEMENT PRACTICE ENHANCMENTS

Best Management Practices currently in place at the Plant Site include biofilter bags that are placed around catch basins and filter socks placed inside the majority of catch basins at the Plant Site. As part of this Work Plan, these BMPs will, at a minimum, be enhanced by replacing the filter socks and replacing and re-configuring the biofilter bags. If deemed necessary, other BMPs (such as cleaning paved areas with surface particulates that have a high potential for contributing COIs to stormwater) may also be implemented.

5.1 REPLACING FILTER SOCKS

During the inspection of the catch basins and sampling of sediment contained within the catch basin filter socks, all filter socks will be replaced. Filter socks and contained sediment will be handled as solid investigation-derived waste as described in the Standard Operating Procedure for Investigation-Derived Waste Handling (SOP-11, Appendix C). The filter socks and sediment will be placed in properly labeled, DOT-approved, 55-gallon drums. All filled or partially filled drums will be properly closed, sealed, labeled, and staged. At the end of the field program, the drums will be removed from the storage area and disposed according to all Federal, State, and local regulations and standard practice.

Filter socks will be replaced with an FLT 116 PIG® Drain Insert Plus or equivalent. Product sheets for the FLT 116 PIG® Drain Insert Plus are included in Appendix D.

5.2 REPLACING BIOFILTER BAGS

During the inspection of the catch basins and sampling of sediment contained within the catch basin filter socks, all biofilter bags will be replaced. Biofilter bags will be inspected. If the biofilter bags appear to be clean & free of any noticeable sediment, they will be placed within a trash container at the Plant Site to be disposed with other plant trash. If the biofilter bags appear to be heavily impregnated with dirt and sediment, they will be handled as solid investigation-derived waste as described in the Standard Operating Procedure for Investigation-Derived Waste Handling (SOP-11, Appendix C). The "dirty" biofilter bags will be placed in properly labeled, DOT-approved, 55-gallon drums. All filled or partially filled drums will be properly closed, sealed, labeled, and staged. At the end of the field program, the drums will be removed from the storage area and disposed according to all Federal, State, and local regulations and standard practice.

Biofilter bags will be replaced and configured in accordance with SC-8, Strom Drain Inlet Protection, of Appendix F of DEQ's Statewide Erosion and Sediment Control Manual. SC-8 is included as Appendix E of this work plan for reference.

6. OPTIONAL SAMPLING

Additional sampling may be conducted based on the preliminary results of the stormwater sampling and the catch basin sediment sampling. This additional sampling may include particle size analysis of TSS contained in stormwater and/or surface soil sampling. A particle size analysis of TSS in stormwater could be conducted on samples collected during the July 2006 sampling event. Surface soil sampling may be conducted pending the results of the catch basin sampling and as part of addressing data gaps identified in the upland remedial investigation to assist in developing the upland feasibility study.

6.1 PARTICLE SIZE ANALYSIS

If it appears that enhancing BMPs will not adequately address COIs in stormwater and, based on total and dissolved analytical results, COIs are determined to be associated with the solids within stormwater, a particle size analysis will be conducted on stormwater samples collected during the July 2006 outfall water sampling event. A 500-mL sample will be collected at all four outfalls as described for the collection of other stormwater samples in Section 2. Particle size distribution will determined via either laser light scattering (Horiba LA920), Centrifugal Photosedimentation (Shimadzu SA-CP3), or equivalent. One field duplicate QA/QC sample will also be collected.

6.2 SURFACE SOIL SAMPLING

Surface soil sampling may be conducted pending the results of the catch basin sampling. As described in Section 1.3, results from the catch basin sampling event will be summarized and presented to DEQ, along with proposed surface soil sampling locations, if necessary. Sampling locations would focus on currently un- or under-delineated areas as described in the Uplands RI, (ERM 2005) that may have a high potential for contributing COIs to stormwater as indicated by the catch basin sampling results.

Before collecting each sample, sampling equipment (e.g. stainless steel spoon, scoop or trowel, mixing bowl, etc.) will be decontaminated by the procedures outlined in the Standard Operating Procedure for Equipment Decontamination (SOP-9, Appendix C). All investigation-derived waste (e.g. decontamination water, etc.) will be handled in accordance with the Standard Operation Procedure for Investigation-Derived Waste Handling (SOP-11, Appendix C).

Surface soil samples will be collected in accordance with the Standard Operating Procedure for Surface Soil Sampling (SOP-4, Appendix C). The top 4 inches of soil, minus any rocks greater than 3 inches in size or organic material covering the sample location, will be excavated, mixed in a stainless steel mixing bowl, and placed in the appropriate sample container. Each sample collected in the field will be labeled in accordance with the Standard Operating Procedure for Sample Labeling (SOP-5, Appendix C), and field activities will be documented according to the Standard Operating Procedures for the Site Logbook (SOP-8, Appendix C).

Samples will be managed according to the protocols described in SOP-6, Standard Operating Procedure for Shipping and Handling of Samples (Appendix C), and SOP-7, Standard Operating Procedure for Sample Custody (Appendix C), as well as the QAPP (Appendix B).

Surface soil samples will be collected and analyzed for the following constituents:

- Perchlorate
- Manganese
- Hexavalent Chromium
- 4,4'-DDE
- 4,4'-DDD
- 4,4'-DDT.

As described in the QAPP (Appendix B), one set of QA/QC samples will be collected, and will consist of:

- One field duplicate for every 20 samples collected,
- One filtered equipment blank for every 20 samples collected (DI water placed in the decontaminated churn-splitter/sample collection bucket and pumped through a clean 0.45-μm filter to a sample bottle with preservative),
- One unfiltered equipment blank for every 20 samples collected (DI water placed in the decontaminated churn-splitter/sample collection bucket and poured into a sample bottle with preservative), and
- One DI water blank for every 20 samples collected (DI water poured directly into a sample bottle with preservative).

QA/QC samples will be prepared in accordance with the Standard Operating Procedure for Quality Control Sample Preparation (SOP-10, Appendix C).

7. STORMWATER FOCUSED FEASIBILITY STUDY

Once sampling is complete and if enhancing currently installed BMPs is not effective at addressing stormwater COIs, a SWFFS would be proposed to determine the most feasible alternative to implement at the Plant Site in accordance with regulatory guidance set forth in the JSCS (EPA and DEQ, 2005). As per the JSCS, the SWFFS would be developed in general accordance with the CERCLA Engineering Evaluation/Cost Analysis process (EPA 1993) as an interim "removal action" to implement source control measures at the Plant Site. Any final "remedial action" for stormwater would be incorporated into the upland feasibility study (FS).

7.1 FOCUSED FEASIBLITY STUDY CONTENTS

The SWFFS would include, but not be limited to the following:

- Site Characterization –
  - Site description and background;
  - Potential Sources;
  - Nature and extent of contamination;
  - COPCs;
  - Previous removal actions;
  - Source Control Screening evaluation.
- Identification of source control measure objectives –
  - Statutory limits;
  - Source control measure scope; and
  - Source control measure schedule.
- Identification and analysis of source control measure alternatives –
  - Effectiveness;
  - Implementability;
  - Cost.
- Comparative analysis of source control measure alternatives.
- Recommended source control measure alternative.

7.2 PRELIMINARY IDENTIFICATION OF STORMWATER TREATMENT ALTERNATIVES

Preliminary alternatives that have been identified to address COIs in stormwater can be categorized by whether they address surface sources of COIs to stormwater or non-surface sources of COIs to stormwater. Surface sources of COIs to stormwater include sources such as construction and/or demolition activities, surface soils, windblown deposition, and background sources. Non-surface sources of COIs to stormwater include groundwater infiltration (generally not applicable at the Plant Site) and infiltration of non-surface particulates to the storm sewer.

Identified treatment alternatives that will be evaluated in the SWFFS to address potential surface sources of COIs to stormwater include the following:

- Enhanced Stormwater Infiltration. This alternative would consist of re-contouring the Plant Site to enhance stormwater infiltration.
- Stormwater Treatment at the Ground Surface. This alternative would consist of re-contouring the Plant Site to divert stormwater flow to ground surface treatment areas, which could include one or all of the following:
    - Bioswales;
    - Infiltration strips;
    - Wetponds or wetlands, or;
    - Above ground sand filters.
- Soil capping/hydro-seeding. This alternative would consist of capping and/or hydro-seeding surface soils to stabilize them, thus mitigating the amount that could be entrained within stormwater flows.

Identified treatment alternatives that will be evaluated in the SWFFS to address potential non-surface sources of COIs to stormwater include the following:

- Sewer Abandonment/Reconstruction. This alternative would consist of abandoning the majority of the current sewer system and replacing it with a new, shallow sewer system.
- Sewer Cleaning/Lining. This alternative would consist of, first, cleaning the existing sewer system, and then lining it with a new material such as cast-in-place pipe.

End-of-pipe or in-pipe treatment could also be implemented to address both surface and non-surface sources of COIs to stormwater. End-of-pipe or in-pipe treatment that could be implemented at the Plant Site could include:

- Hydrodynamic separators (e.g. Vortechs™ System);
- Cartridge filter system (e.g. Vortfilter™ or Stormfilter™);
- In-vault or linear sand filters;
- Multi-media (carbon and sand) filters, and;

- Wet Vaults (i.e., detention facility).

Given the complexity and costs of such a system, these end-of-pipe or in-pipe treatment alternatives will only be considered as a final remedy for Plant Site stormwater. The evaluation in the SWFFS of the previously discussed treatment alternatives will consider how they may be integrated with end-of-pipe or in-pipe treatment, along with whether they would preclude and/or assist implementation of future in-water remediation or additional source control measures.

8. REFERENCES

Arkema. 2005. Stormwater characterization repot, Portland plant. Arkema, Inc., 6400 NW Front Avenue, Portland, OR.

DEQ and USEPA. 2005. Portland Harbor Join Source Control Strategy, Final, December 2005. Oregon Department of Environmental Quality and U.S. Environmental Protection Agency. http://www.deq.state.or.us/nwr/PortlandHarbor/jscs.htm.

ERM. 2005. Upland Remedial Investigation Report Lots 3 & 4 and Tract A – Revision 1. Prepared for Arkema, Inc., 6400 NW Front Avenue, Portland, OR. Environmental Resources Management, 6650 SW Redwood Lane, Suite 300, Portland, OR.

EPA. 1993. Conducting Non-Time-Critical Removal Actions Under CERCLA. EPA, December 1993. OSWER 9360.0-32FS. EPA/540/F-94/009.

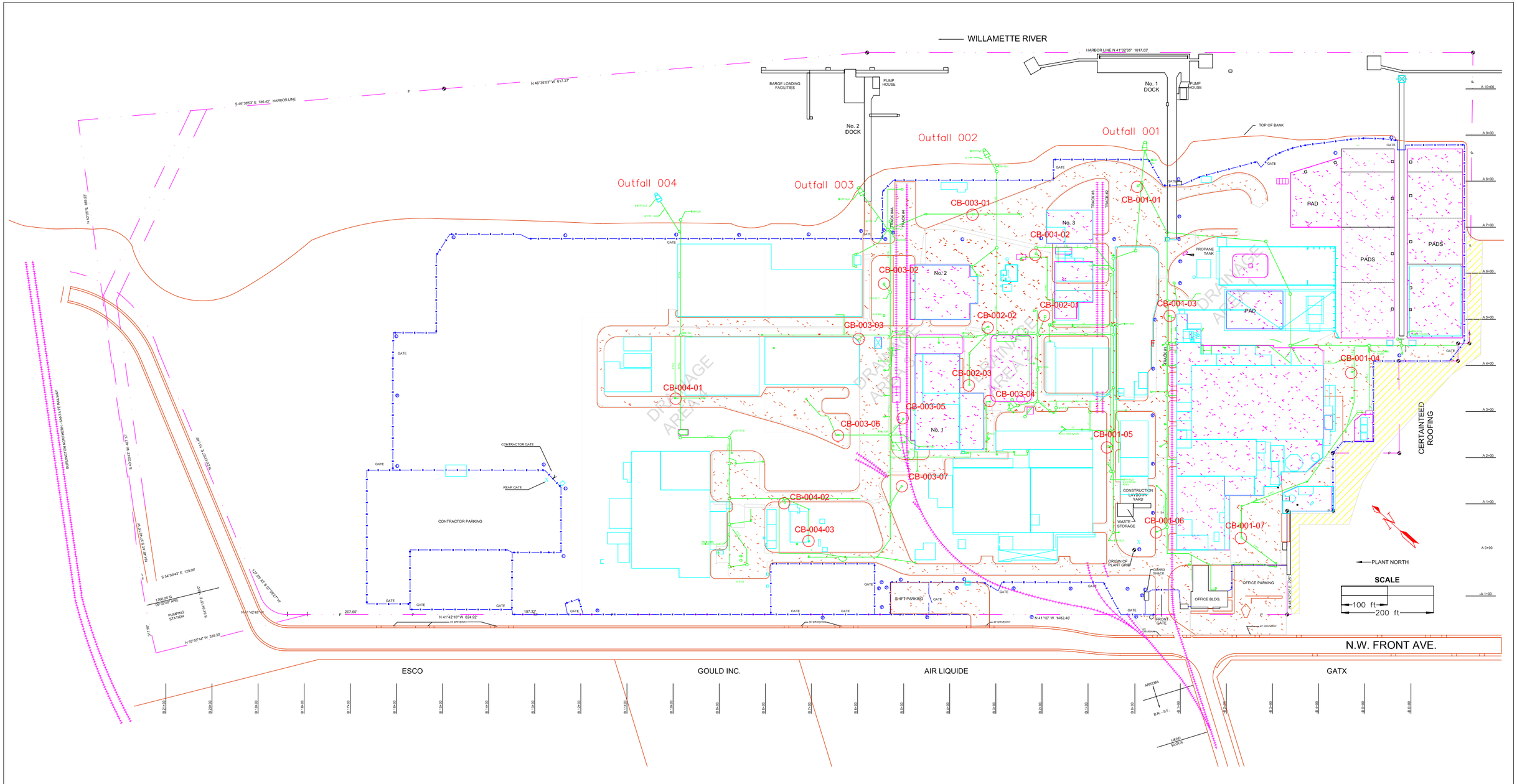

NOTES

◯ = Proposed Sample Points
CB-XXX-XX = Catch Basin Filter Sock Sample,
XXX = Outfall location of Catch Basin
XX = Sample Number
Outfall XXX = Outfall Water Sample,
XXX = Outfall designation

STORMWATER LEGEND

DRAINAGE AREA (approx.)
Indust Sewer, Drain, Manhole
Former Buildings, Tank Farms

LEGEND

LEGAL BOUNDARY, EASEMENT
FOUNDATIONS, ASPHALT PADS, IMPERVOUS
STREETS, PARKING AREAS, IMPERVIOUS
RAILROAD
FENCE
LIGHT POLE, POWER POLE

ARKEMA
Arkema Inc, 6400 NW Front Ave, Portland, OR 97210

Figure 1. Outfall and Catch Basin Sampling Locations

DRAWN BY: **JMB** DATE: **05/31/05** SCALE: **1" = 100'**
DWG No. **P - 003 - 00052** REV. **4** APPROVED

APPENDIX A

Summary of Screening of Data from the Stormwater Characterization Report

TABLE OF CONTENTS

LIST OF FIGURES 2
LIST OF TABLES 2
ACRONYMS AND ABBREVIATIONS 3
DATA SCREENING RESULTS 4
REFERENCES 5

LIST OF FIGURES

Figure 1. Stormwater Outfalls and Associated Drainage Basins, Arkema, Inc.—Portland, Oregon Facility

Figure 2. Phased Demolition Activities, Arkema, Inc.—Portland, Oregon Facility

Figure 3. 4,4'-DDE Concentrations in Stormwater, Arkema, Inc.—Portland, Oregon Facility

Figure 4. 4,4'-DDD Concentrations in Stormwater, Arkema, Inc.—Portland, Oregon Facility

Figure 5. 4,4'-DDT Concentrations in Stormwater, Arkema, Inc.—Portland, Oregon Facility

Figure 6. Perchlorate Concentrations in Stormwater, Arkema, Inc.—Portland, Oregon Facility

Figure 7. Hexavalent Chromium Concentrations in Stormwater, Arkema, Inc.—Portland, Oregon Facility

Figure 8. Manganese Concentrations in Stormwater, Arkema, Inc.—Portland, Oregon Facility

LIST OF TABLES

Table 1. 2004/2005 Stormwater Characterization Data, Arkema, Inc. Portland Facility

ACRONYMS AND ABBREVIATIONS

Arkema	Arkema, Inc.
AWQC	ambient water quality criteria
COI	constituent of interest
DEQ	Oregon Department of Environmental Quality
DWEL	Drinking Water Equivalent Level
EPA	U.S. Environmental Protection Agency
JSCS	Joint Source Control Strategy
MCL	maximum contaminant level
NRWQC	National Recommended Water Quality Criteria
ORNL	Oak Ridge National Laboratory
PAH	polycyclic aromatic hydrocarbon
PCB	polychlorinated biphenyl
Plant Site	Arkema, Inc., Portland, Oregon, Facility
ppb	parts per billion
ppm	parts per million
PRG	preliminary remediation goal
SCR	stormwater characterization report
SLV	screening level value
TDS	total dissolved solids

DATA SCREENING RESULTS

The Arkema, Inc. (Arkema), Portland, Oregon, Facility (Plant Site) was issued a National Pollutant Discharge Elimination System stormwater discharge permit by the Oregon Department of Environmental Quality (DEQ) on January 22, 2004 for the discharge of storm runoff water from the Plant Site. As a condition of the permit, Arkema was required to conduct a stormwater characterization for legacy and 303(d) constituents for a 1-year period. On May 18, 2005, Arkema submitted a stormwater characterization report (SCR) to DEQ in compliance with its permit (Arkema 2005). For the SCR, stormwater samples were collected at the Plant Site on a monthly basis from February 2004 through March 2005 and analyzed for total dissolved solids (TDS), iron, manganese, mercury, hexavalent chromium, 4,4'-DDT, 4,4'-DDD, 4,4'-DDE, polycyclic aromatic hydrocarbons (PAHs), polychlorinated biphenyl (PCBs), chlorobenzene, pentachlorophenol, perchlorate, and chloride from Outfalls 001, 002, 003, and 004 (Figure 1). During the majority of the sampling period (March 2004 through January 2005), Phase III demolition activities were conducted at the Plant Site.[1] Figure 2 shows the structures that were demolished as part of Phase III demolition activities. A majority of the concrete slabs and foundations were also removed in the Phase III demolition project.

Data collected as part of the SCR were screened against screening level values (SLVs), set forth by DEQ and the EPA in the Portland Harbor Joint Source Control Strategy (JSCS; DEQ and EPA 2005), to establish constituent of interest (COIs) for the Plant Site stormwater. The SCR data as well as the results of this screening are presented in Table 1. This screening indicates that the COIs for stormwater at the Plant Site include perchlorate, hexavalent chromium, DDE, DDD, and DDT and potentially manganese. A summary of the screening results is provided bleow.

- Measured 4,4'-DDE (DDE) concentrations are presented in Figure 3. SLVs for DDE presented in the JSCS include the U.S. Environmental Protection Agency's (EPA's) National Recommended Water Quality Criteria (NRWQC) for ingestion of fish at a consumption rate of 17.5 g/day of 0.00022 parts per billion (ppb) and the EPA Region 9 tap water preliminary remediation goal (PRG) of 0.2 ppb. The detection limit for DDE for the stormwater sampling was approximately 0.039 ppb, which exceed the SLV for human consumption of fish. Most samples in Outfalls 003 and 004 were below the human consumption of water SLV. Outfalls 001 and 002 had periods where DDE concentrations were both above and below the SLV for human consumption of water. DDE is considered to be a potentially bioaccumulative COI for the Portland Harbor.

[1] Phase I and II demolition activities were conducted prior to the SCR sampling activities in the spring of 2003 and the later half of 2003, respectively.

- Measured 4,4′-DDD (DDD) concentrations are presented in Figure 4. SLVs for DDD presented in the JSCS include EPA's NRWQC for ingestion of fish at a consumption rate of 17.5 g/day of 0.00031 ppb, the EPA Region 9 tap water PRG of 0.28 ppb, and the Oak Ridge National Laboratory (ORNL) toxicological benchmark value for ecological receptors of 0.011 ppb. 4,4′-DDD was not detected in the samples collected from outfalls from March through August 2004. However, the detection limit for DDD for the stormwater sampling was approximately 0.039 ppb, which exceeded the SLV for human consumption of fish and the SLV for ecological receptors. Most samples in all four outfalls from September 2004 through March 2005 were detected at levels above the ecological receptor SLV, but well below the SLV for water consumption. DDD is considered to be a potentially bioaccumulative COI for the Portland Harbor.
- Measured 4,4′-DDT (DDT) concentrations are presented in Figure 5. SLVs for DDT presented in the JSCS include EPA's NRWQC for ingestion of fish at a consumption rate of 17.5 g/day of 0.00022 ppb, the EPA Region 9 tap water PRG of 0.2 ppb, and the EPA NRWQC (chronic value) for ecological receptors of 0.001 ppb. Most samples in all four outfalls exceeded both the SLV for human consumption of fish and the SLV for ecological receptors. Furthermore, most samples collected from March through August 2004 were within the range of the water consumption SLV, and samples that were collected later in the monitoring period (September 2004 to January 2005) had DDT concentrations above this SLV. DDT is considered to be a potentially bioaccumulative COI for the Portland Harbor.
- Measured perchlorate concentrations are presented in Figure 6. The only SLV presented in the JSCS is the EPA Region 9 tap water PRGs of 3.6 ppb, however, that value was recently superseded by an EPA revised drinking water equivalent level (DWEL) of 24.5 ppb (EPA 2006). Only 12 of the 40 samples collected from all four outfalls exceeded the DWEL, however, it is unlikely that the Willamette River in this area would ever be used as a drinking water source. In addition, perchlorate is not considered a potentially bioaccumulative COI for the Portland Harbor.
- Measured hexavalent chromium concentrations are presented in Figure 7.[2] SLVs for hexavalent chromium presented in the JSCS include EPA Region 9 tap water PRG of 110 ppb and EPA's NRWQC for ecological receptors (chronic value) of 11 ppb. Sampling results indicate that Outfalls 001, 002, and 003 do not exceed either of these SLVs with the exception of the January 2005 sample collected from

[2] Samples collected in April 2004 at all four outfalls were analyzed for total chromium instead of hexavalent chromium. Of these four samples, only the sample from Outfall 004 had a detecteable level of chromium (15.6 ppb). This detection exceeded the EPA's MCL for drinking water set at 10 ppb for chromium.

Outfall 003 (11.2 ppb). Concentrations of hexavalent chromium in samples collected from Outfall 004 ranged from below detection (10 ppb detection limit) to 26.4 ppb, exceeding the ecological receptor SLV only slightly. In addition, hexavalent chromium is not considered to be a potentially bioaccumulative COI for the Portland Harbor.

- Measured manganese concentrations are presented in Figure 8. SLVs for manganese presented in the JSCS include EPA's NRWQC for ingestion of fish at a consumption rate of 17.5 g/day of 0.1 parts per million (ppm), EPA's National Secondary Drinking Water Standard of 0.05 ppm, and the ORNL toxicological benchmark value for ecological receptors of 0.12 ppm. Sampling results indicate that only 3 of the 40 samples collected exceed EPA's NRWQC SLV for consumption of fish and ORNL SLVs for ecological receptors (March 2004 sample collected at Outfall 001 and the October 2004 samples collected at Outfalls 001 and 004). While 17 of the 40 samples collected exceeded the secondary drinking water standard for the consumption of water, secondary standards are guidelines regulating contaminants that may cause cosmetic effects (such as skin or tooth discoloration) or aesthetic effects (such as taste, odor, or color) in drinking water and it is improbable that the Willamette River is this area would be used as a drinking water source. Manganese is considered to be a potentially bioaccumulative COI for the Portland Harbor

Based on this screening, COIs for stormwater at the Plant Site include perchlorate, hexavalent chromium, DDE, DDD, and DDT and potentially manganese. In addition to these COIs, the following additional observations were made with respect to the JSCS screening.

- Chlorobenzene was not detected (detection limit of 5 ppb) in any of the samples collected as part of the stormwater characterization.
- All sample results for PAHs from all four outfalls were less than the detection limit of approximately 9.5 to 10 ppb.
- All sample results for all of the PCB congeners from the four outfalls were less than the detection limit of approximately 0.97 ppb.
- Pentachlorophenol was not detected in any of the stormwater characterization samples except for samples collected in October 2004. Stormwater samples collected at Outfalls 001, 003, and 004 in October 2004 contained 130, 71, and 30 ppb of pentachlorophenol, respectively. As part of the Phase III demolition activities in October 2004, pressure treated utility poles were cut flush to grade and then were cut into short lengths so that they could be removed from the plant. It is assumed that sawdust containing pentachlorophenol from the pressure treated wood caused the detections in the October effluent samples. Subsequent samples for all outfalls for November 2004 through March 2005 had no detectable

level of pentachlorophenol. SLVs for pentachlorophenol presented in the JSCS include EPA's NRWQC for ingestion of fish at a consumption rate of 17.5 g/day of 3 ppb, EPA Region 9 tap water PRGs for water consumption of 0.56 ppb, and EPA's NRWQC for chronic exposures to ecological receptors of 15 ppb. Pentachlorophenol is considered a potentially bioaccumulative COI for the Portland Harbor.

- Sample results for mercury from all four outfalls were less than the detection limit of 0.2 ppb with the exception of the March 2004 sample for Outfall 003 (0.3 ppb) and the May 2004 sample for Outfall 004 (0.2 ppb). Subsequent samples (August 2004 through March 2005) all indicated no detectable levels of mercury. SLVs for mercury presented in the JSCS include the DEQ ambient water quality criterion (AWQC) for ingestion of fish at a consumption rate of 17.5 g/day of 0.146 ppb, EPA's maximum contaminant level (MCL) for water consumption of 2 ppb, and EPA's NRWQC for ecological receptors of 0.77 ppb. Mercury results are below the EPA MCL and NRWQC for ecological receptor SLVs. Mercury is considered to be a potentially bioaccumulative COI for the Portland Harbor.
- The JSCS does not include SLVs for TDS, chloride, or iron. Furthermore, based upon a comparison of concentrations of these constituents against water quality standards for the Willamette River, TDS, chloride, and iron do not appear to be an issue in plant stormwater runoff (Arkema 2005).

REFERENCES

Arkema. 2005. Stormwater characterization report, Portland plant. Arkema, Inc., 6400 NW Front Avenue, Portland, OR.

DEQ and EPA. 2005. Portland Harbor Joint Source Control Strategy, Final, December 2005. Oregon Department of Environmental Quality and U.S. Environmental Protection Agency. http://www.deq.state.or.us/nwr/PortlandHarbor/jscs.htm.

EPA. 2006. Memorandum from Susan Parker Bodine, Assistant Administrator, to Regional Administrators date January 26, 2006. RE: Assessment Guidance for Perchlorate.

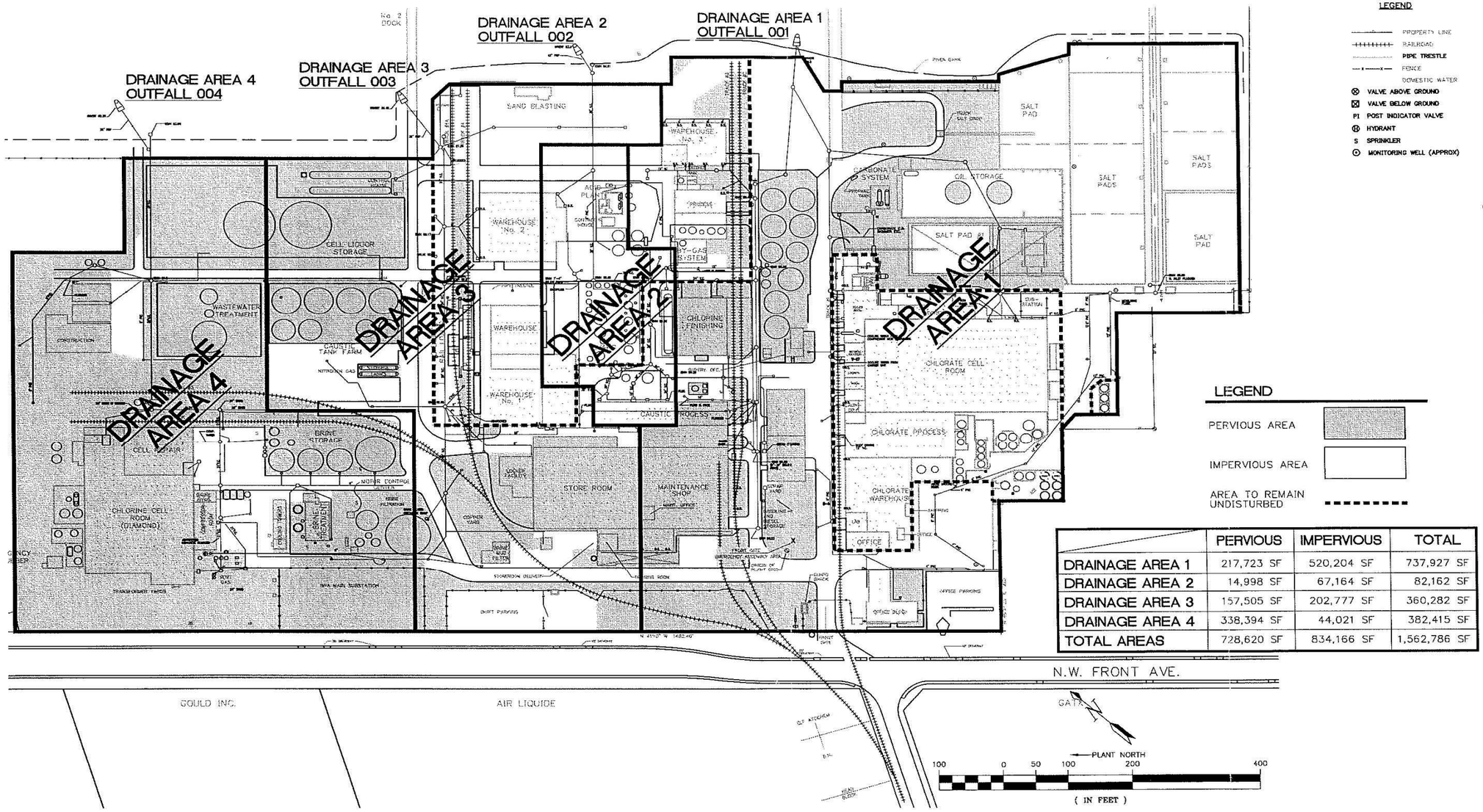

LEGEND

- PROPERTY LINE
- RAILROAD
- PIPE TRESTLE
- FENCE
- DOMESTIC WATER
- VALVE ABOVE GROUND
- VALVE BELOW GROUND
- PI POST INDICATOR VALVE
- HYDRANT
- S SPRINKLER
- MONITORING WELL (APPROX)

LEGEND

- PERVIOUS AREA
- IMPERVIOUS AREA
- AREA TO REMAIN UNDISTURBED

	PERVIOUS	IMPERVIOUS	TOTAL
DRAINAGE AREA 1	217,723 SF	520,204 SF	737,927 SF
DRAINAGE AREA 2	14,998 SF	67,164 SF	82,162 SF
DRAINAGE AREA 3	157,505 SF	202,777 SF	360,282 SF
DRAINAGE AREA 4	338,394 SF	44,021 SF	382,415 SF
TOTAL AREAS	728,620 SF	834,166 SF	1,562,786 SF

GROUP MACKENZIE
Architecture
Interior Design
Land Use Planning
Civil Engineering
Structural Engineering
Transportation Planning
Portland OR 503.224.9560
Vancouver WA 360.695.7879
Tacoma WA 253.477.05.1

Client
ATOFINA
ATOFINA Chemicals, Inc.
5400 N.W. Front Ave., Portland, OR 97210

Project

© GROUP MACKENZIE 2004
ALL RIGHTS RESERVED
THESE DRAWINGS ARE THE PROPERTY OF GROUP MACKENZIE AND ARE NOT TO BE USED OR REPRODUCED IN ANY MANNER, WITHOUT PRIOR WRITTEN PERMISSION.

REVISIONS:

REVISION DELTA	REVISIONS THIS SHEET	REVISION DELTA CLOSING DATE

SHEET TITLE:
POST PHASE III
DEMOLITION PLAN
EXHIBIT 'B'

DRAWN BY: GLK
CHECKED BY: BDS
SHEET: 2
JOB NO. 2020253.00

integral consulting inc.

Source: Storm Water Pollution Control Plan, ATOFINA Chemicals, Inc. March 18, 2004

Not to Scale

Figure 1. Stormwater Outfalls and Associated Drainage Basins

Arkema, Inc. – Portland, Oregon Facility

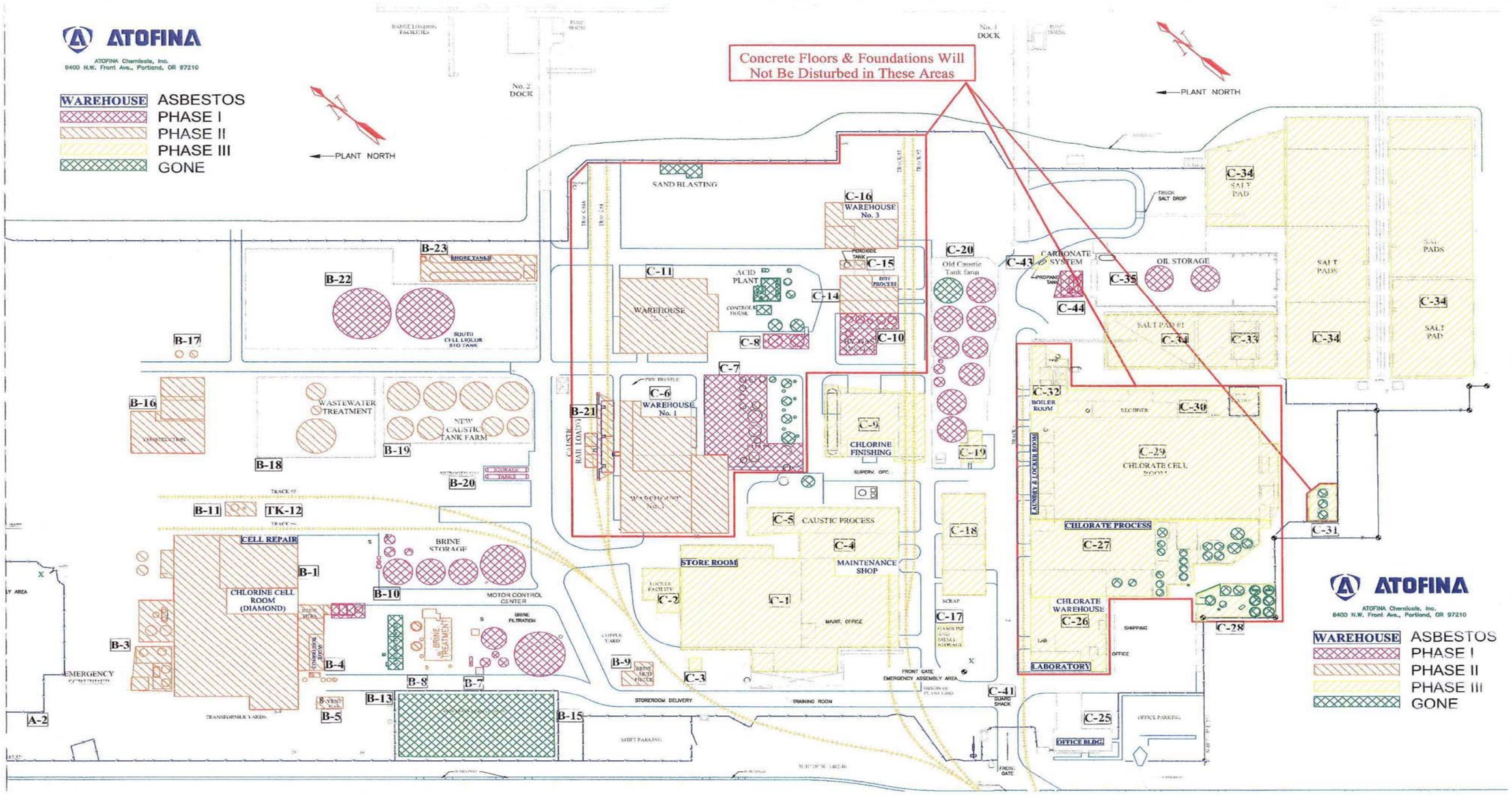

Source: Storm Water Pollution Control Plan, ATOFINA Chemicals, Inc. March 18, 2004

Not to Scale

Figure 2. Phased Demolition Activities, Arkema, Inc. –Portland, Oregon Facility

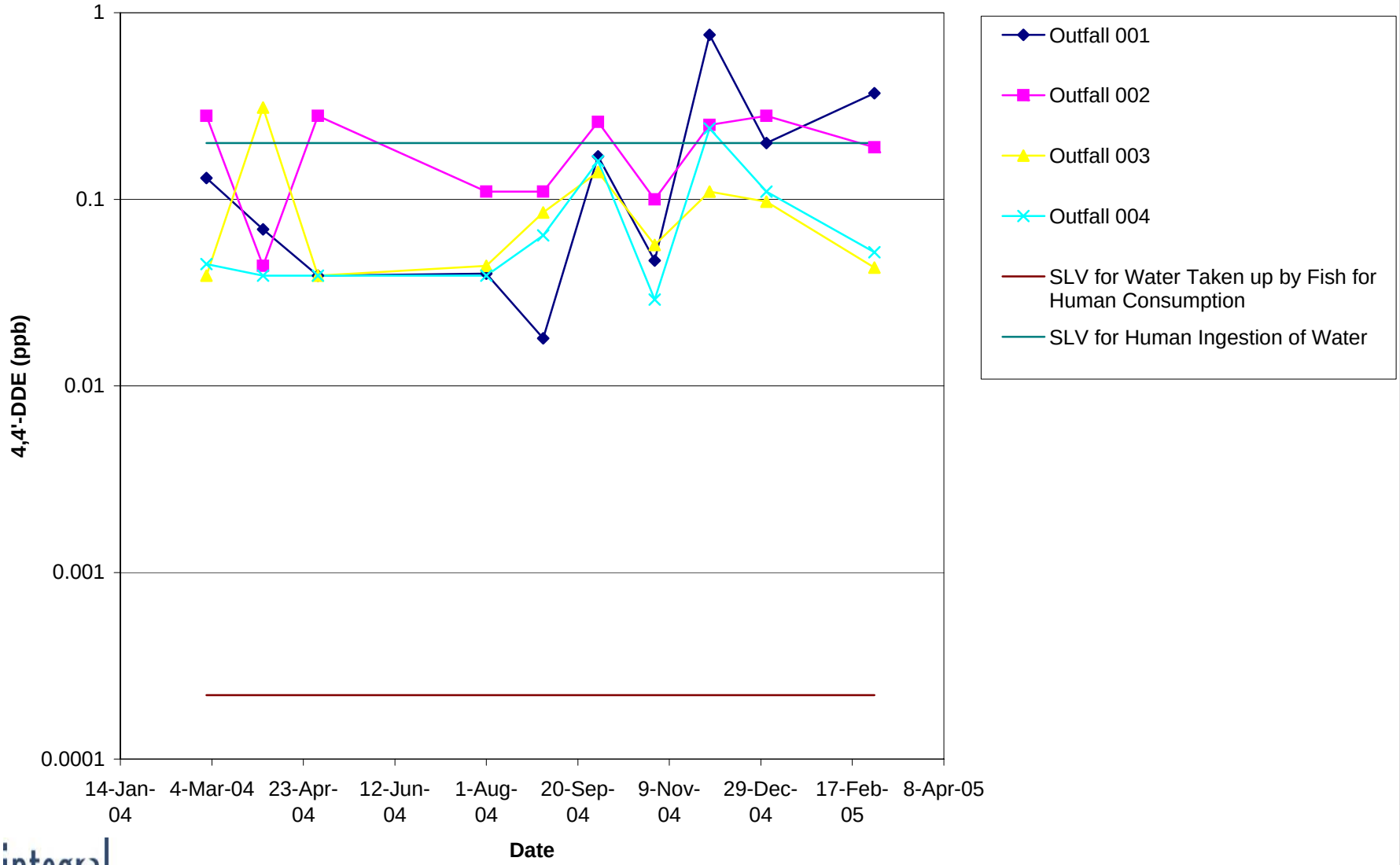

Figure 3. 4,4'-DDE Concentrations in Stormwater
Arkema, Inc. - Portland, Oregon Facility

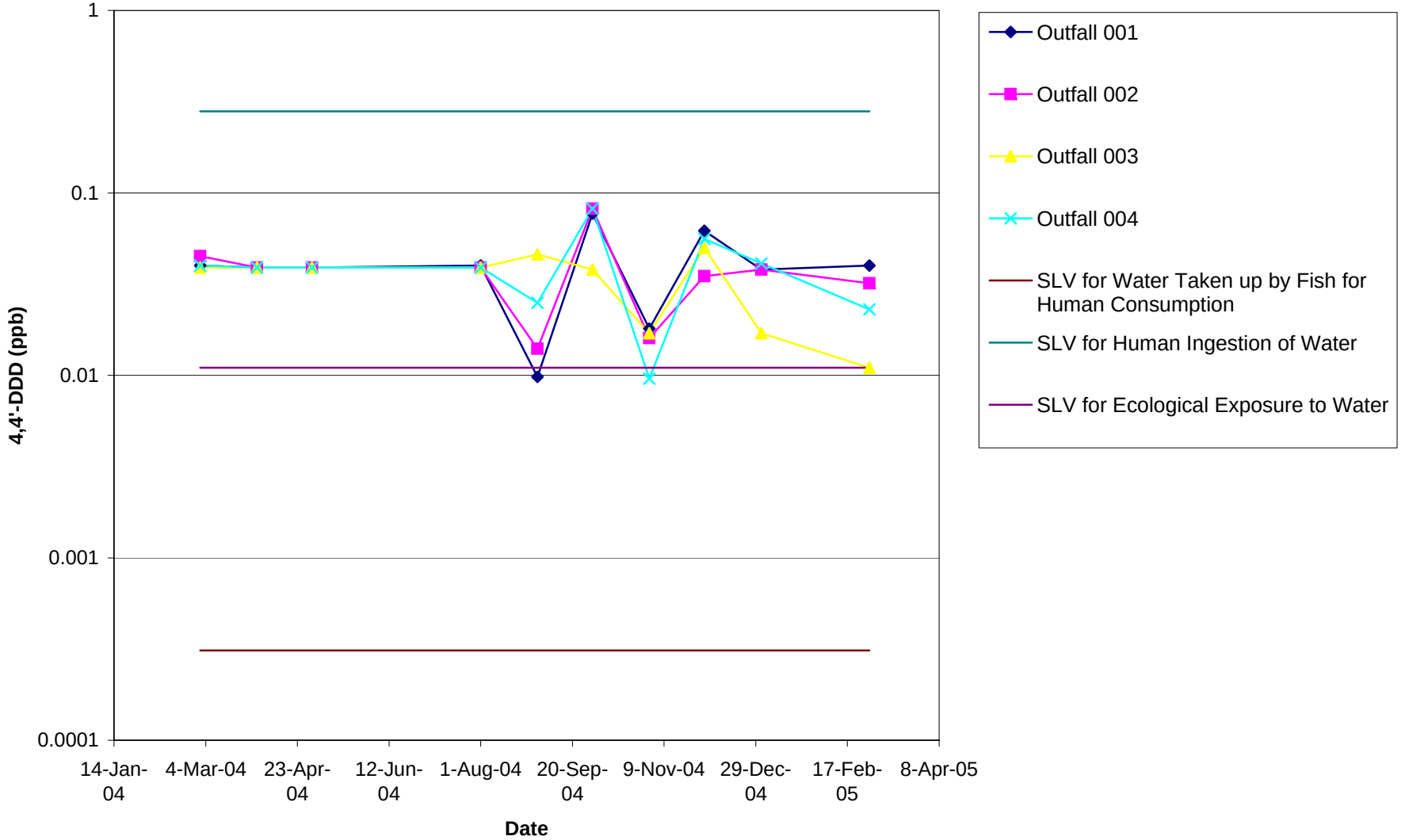

Figure 4. 4,4'-DDD Concentrations in Stormwater
Arkema, Inc. - Portland, Oregon Facility

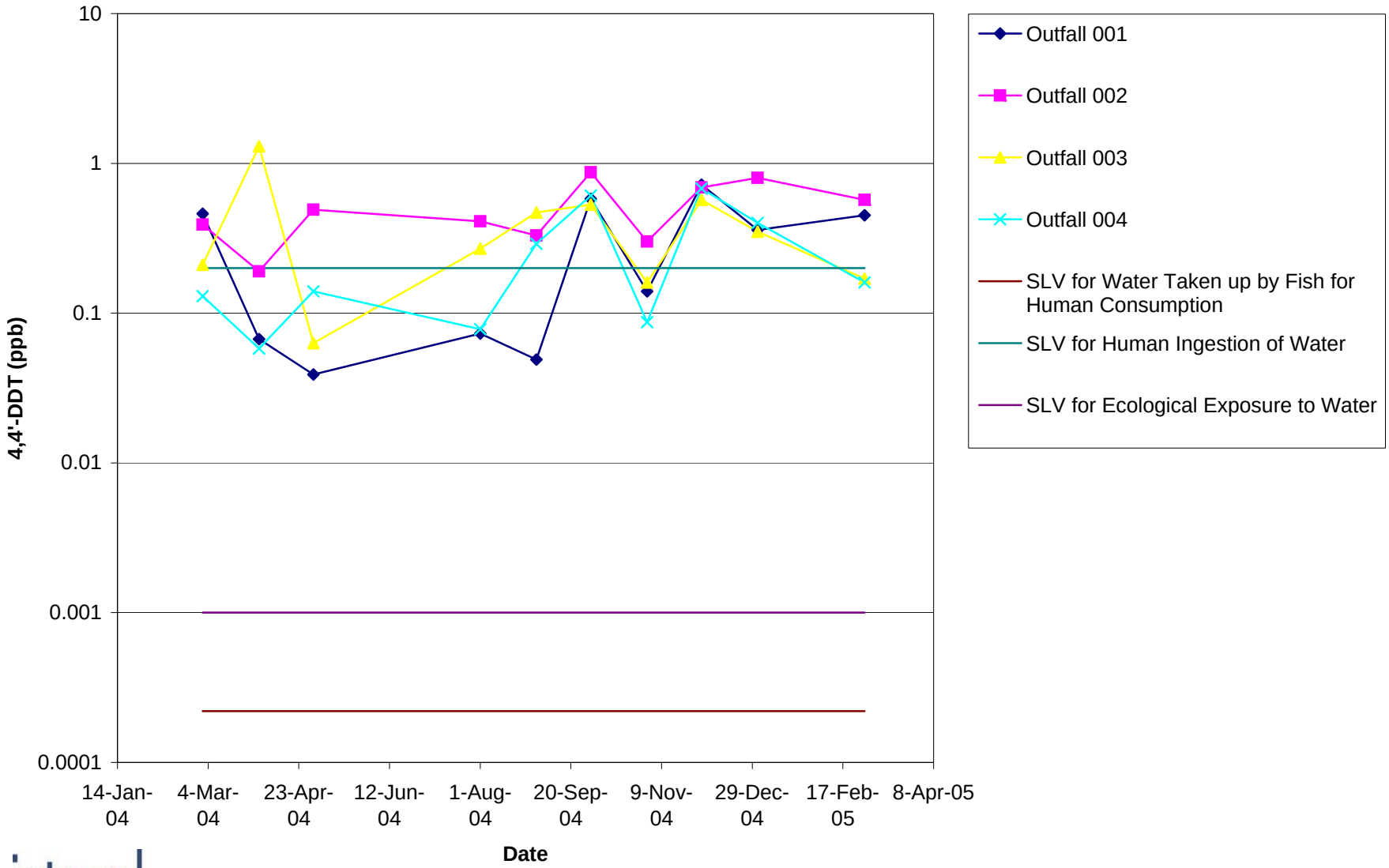

Figure 5. 4,4'-DDT Concentrations in Stormwater
Arkema, Inc. - Portland, Oregon Facility

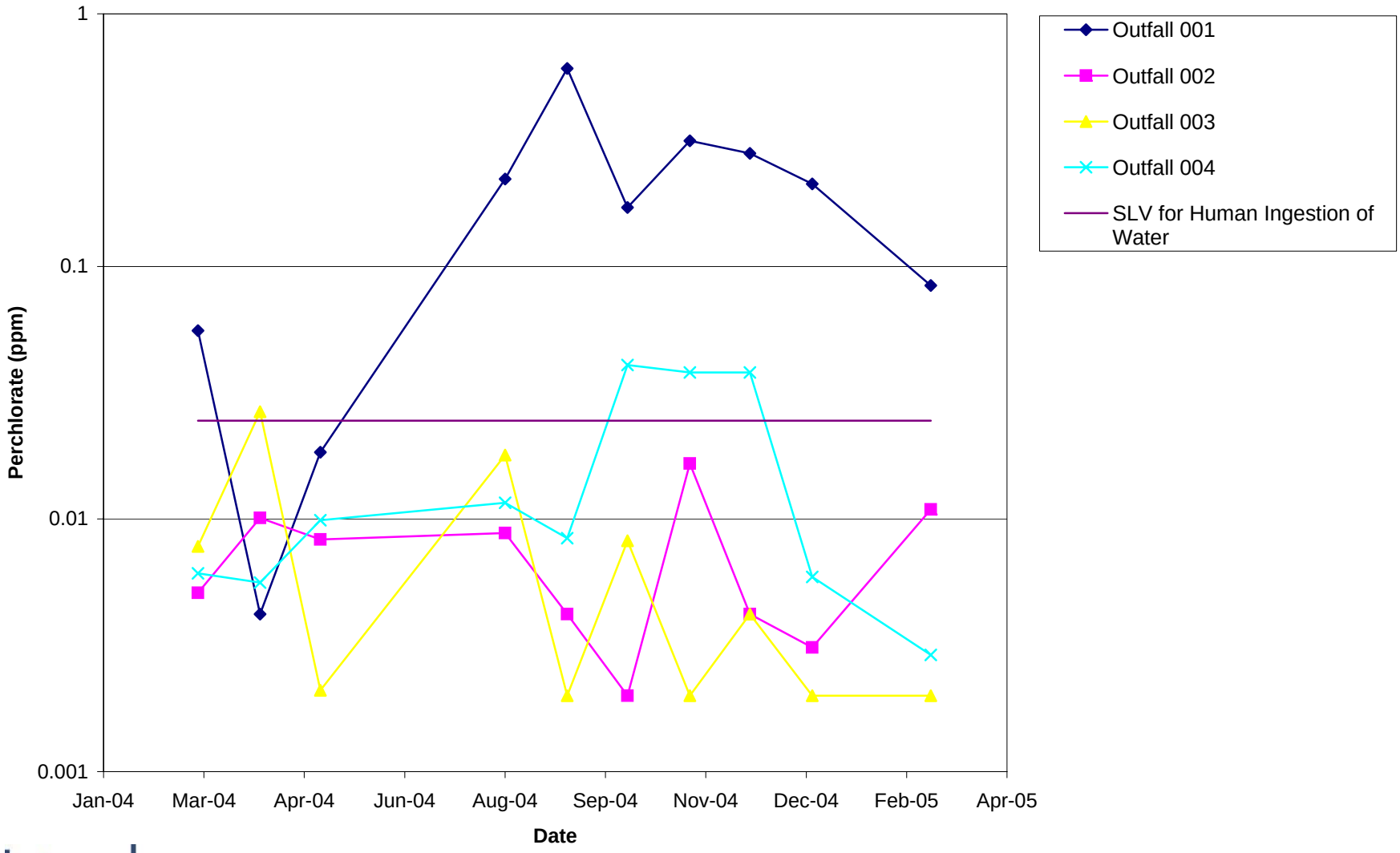

Figure 6. Perchlorate Concentrations in Stormwater
Arkema, Inc. - Portland, Oregon Facility

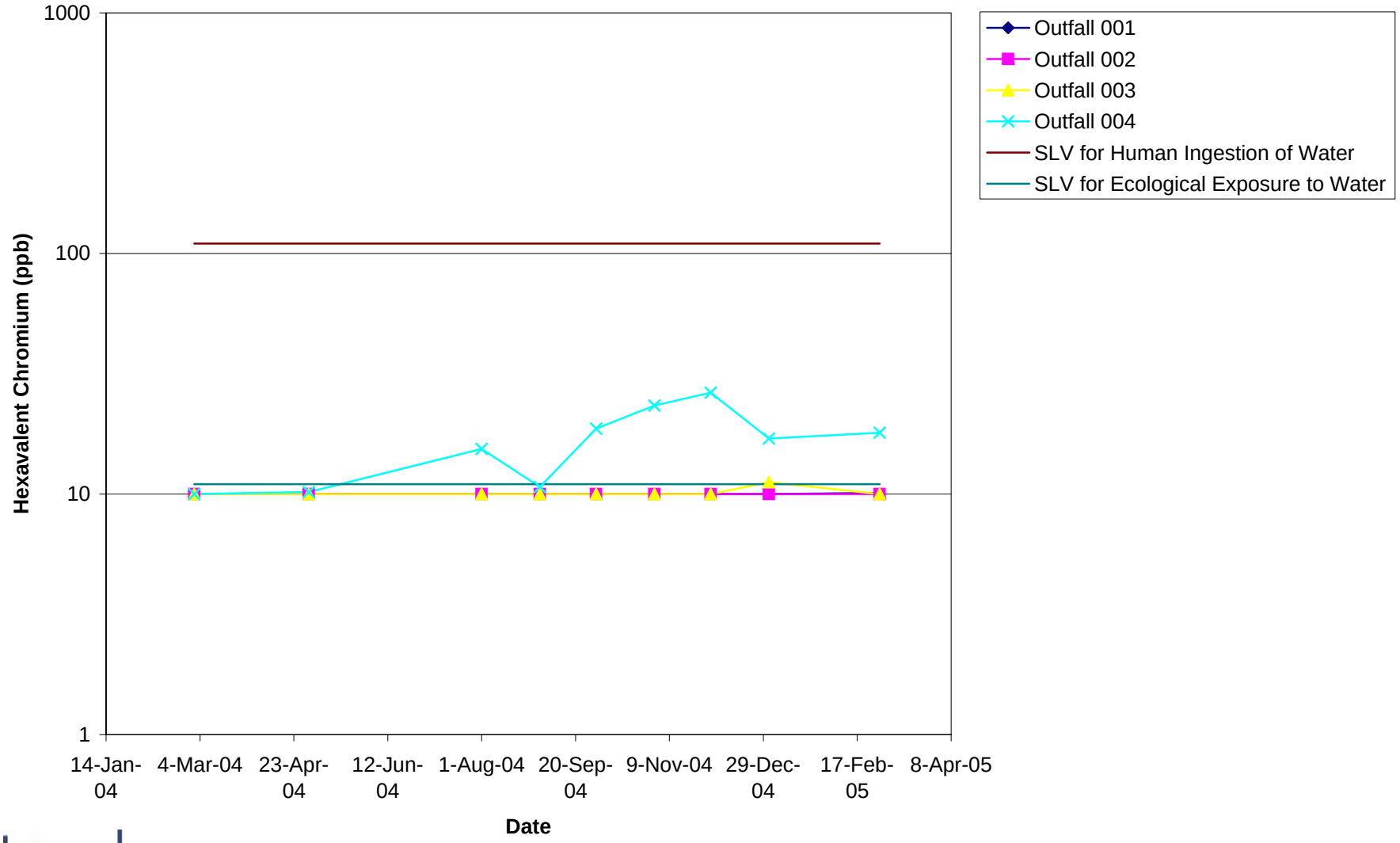

Figure 7. Hexavalent Chromium Concentrations in Stormwater
Arkema, Inc. - Portland, Oregon Facility

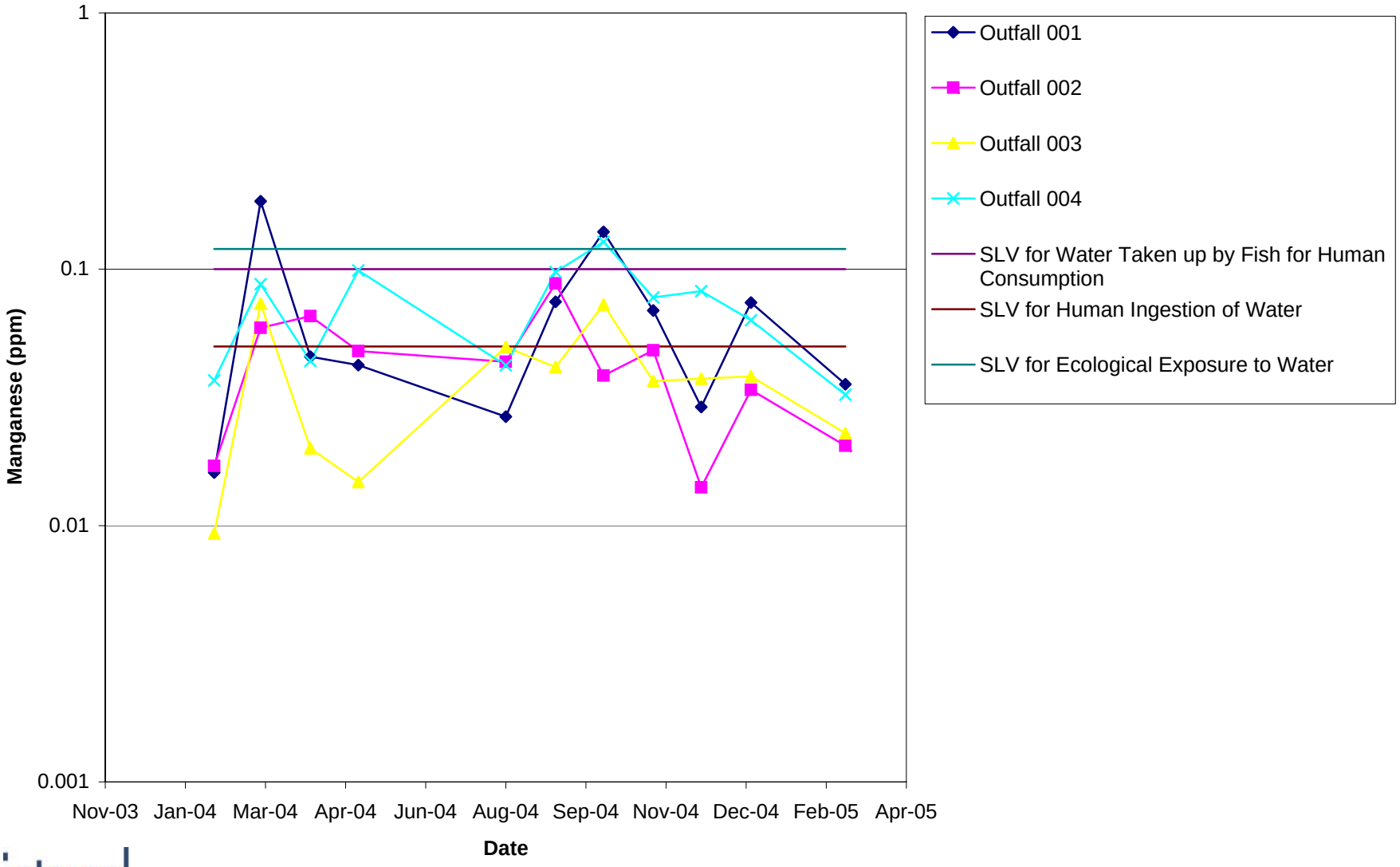

Figure 8. Manganese Concentrations in Stormwater
Arkema, Inc. - Portland, Oregon Facility

Table 1.
2004/2005 Stormwater Characterization Data, Arkema, Inc. Portland Oregon Facility.

	JSCS Screening Levels for Water																
	Human Health						Ecological Receptors										
	Fish Consumption				Drinking Water												
	EPA's 2004 NRWQC (organism only)		DEQ's 2004 AWQC (organism only)		MCL	Tap Water PRGs	EPA's 2004 NRWQC (chronic)	DEQ's 2004 AWQC (chronic)	Oak Ridge National Laboratory's Tier II SCV	Outfall 001	Outfall 001	Outfall 001	Outfall 001	Outfall 001	Outfall 001	Outfall 001	Outfall 001
Analyte	17.5 g/day	175 g/day	17.5 g/day	175 g/day						2/1/2004	3/30/2004	4/20/2004	5/28/2004	8/24/2004	9/13/2004	10/1/2004	11/24/2004
Aroclors																	
Aroclor 1016	**6.4E-08**	6.4E-09	6.4E-08	6.4E-09	--	*0.00096*	0.000014	0.000014	--	--	0.00099 *U*	0.00096 *U*	0.00096 *U*	0.00099 *U*	0.00098 *U*	0.001 *U*	0.00096 *U*
Aroclor 1221	**6.4E-08**	6.4E-09	6.4E-08	6.4E-09	--	*0.000034*	0.000014	0.000014	0.00028	--	0.00099 *U*	0.00096 *U*	0.00096 *U*	0.00099 *U*	0.00098 *U*	0.002 *U*	0.00096 *U*
Aroclor 1232	**6.4E-08**	6.4E-09	6.4E-08	6.4E-09	--	*0.000034*	0.000014	0.000014	0.00058	--	0.00099 *U*	0.00099 *U*	0.00096 *U*	0.00099 *U*	0.00098 *U*	0.001 *U*	0.00096 *U*
Aroclor 1242	**6.4E-08**	6.4E-09	6.4E-08	6.4E-09	--	*0.000034*	0.000014	0.000014	0.000053	--	0.00099 *U*	0.00099 *U*	0.00096 *U*	0.00099 *U*	0.00098 *U*	0.001 *U*	0.00096 *U*
Aroclor 1248	**6.4E-08**	6.4E-09	6.4E-08	6.4E-09	--	*0.000034*	0.000014	0.000014	0.000081	--	0.00099 *U*	0.00096 *U*	0.00096 *U*	0.00099 *U*	0.00098 *U*	0.001 *U*	0.00096 *U*
Aroclor 1254	**6.4E-08**	6.4E-09	6.4E-08	6.4E-09	--	*0.000034*	0.000014	0.000014	0.000033	--	0.00099 *U*	0.00096 *U*	0.00096 *U*	0.00099 *U*	0.00098 *U*	0.0017 *U*	0.00096 *U*
Aroclor 1260	**6.4E-08**	6.4E-09	6.4E-08	6.4E-09	--	*0.000034*	0.000014	0.000014	0.094	--	0.00099 *U*	0.00096 *U*	0.00096 *U*	0.00099 *U*	0.00098 *U*	0.001 *U*	0.00096 *U*
Aroclors	**6.4E-08**	6.4E-09	6.4E-08	6.4E-09	0.0005	*0.000034*	0.000014	0.000014	0.00014	--	0.00099 *UT*	0.00096 *UT*	0.00096 *UT*	0.00099 *UT*	0.00098 *UT*	0.002 *UT*	0.00096 *UT*
Conventionals																	
Chloride	--	--	--	--	--	--	--	--	--	--	33.3	31.1	45.6	38.6	55.4	93	62.9
Perchlorate	--	--	--	--	--	*0.245*	--	--	--	--	*0.0557*	0.0042	0.0184	*0.222*	*0.608*	*0.171*	*0.314*
Metals																	
Chromium hexavalent	--	--	--	--	--	*0.11*	0.011	0.011	--	--	0.01 *U*	--	0.01 *U*	0.01 *U*	0.01 *U*	0.01 *U*	0.01 *U*
Chromium	--	--	--	--	*0.01*	--	--	--	--	--	--	0.01 *U*	--	--	--	--	--
Iron	--	--	--	--	--	--	--	--	--	0.546	11.4	1.56	0.935	0.644	1.4	7.31	2.99
Manganese	**0.1**	0.01	0.1	0.01	*0.05*	0.88	--	--	0.12	0.0161	***0.184***	0.0456	0.0423	0.0266	*0.0746*	***0.14***	*0.0691*
Mercury	--	--	**0.000146**	1.46E-05	*0.002*	0.011	0.00077	0.000012	0.0013	--	0.0002 *U*	0.0002 *U*	0.0002 *U*	0.0002 *U*	0.0002 *U*	0.0002 *U*	0.0002 *U*
PAHs																	
Acenaphthene	**0.99**	0.099	0.99	0.099	*0.0002*	0.37	--	0.52	--	--	0.01 *U*	0.0096 *U*	0.01 *U*	0.0096 *U*	0.0098 *U*	0.0097 *U*	0.0096 *U*
Acenaphthylene	--	--	--	--	*0.0002*	--	--	--	--	--	0.01 *U*	0.0096 *U*	0.01 *U*	0.0096 *U*	0.0098 *U*	0.0097 *U*	0.0096 *U*
Anthracene	**40**	4	40	4	*0.0002*	1.8	--	--	0.00073	--	0.01 *U*	0.0096 *U*	0.01 *U*	0.0096 *U*	0.0098 *U*	0.0097 *U*	0.0096 *U*
Benz(a)anthracene	**0.000018**	1.8E-06	0.000018	1.8E-06	0.0002	*0.000092*	--	--	0.000027	--	0.01 *U*	0.0096 *U*	0.01 *U*	0.0096 *U*	0.0098 *U*	0.0097 *U*	0.0096 *U*
Benzo(a)pyrene	**0.000018**	1.8E-06	0.000018	1.8E-06	0.0002	*9.2E-06*	--	--	0.000014	--	0.01 *U*	0.0096 *U*	0.01 *U*	0.0096 *U*	0.0098 *U*	0.0097 *U*	0.0096 *U*
Benzo(b)fluoranthene	**0.000018**	1.8E-06	0.000018	1.8E-06	0.0002	*0.000092*	--	--	--	--	0.01 *U*	0.0096 *U*	0.01 *U*	0.0096 *U*	0.0098 *U*	0.0097 *U*	0.0096 *U*
Benzo(g,h,i)perylene	--	--	--	--	*0.0002*	--	--	--	--	--	0.01 *U*	0.0096 *U*	0.01 *U*	0.0096 *U*	0.0098 *U*	0.0097 *U*	0.0096 *U*
Benzo(k)fluoranthene	**0.000018**	1.8E-06	0.000018	1.8E-06	*0.0002*	0.00092	--	--	--	--	0.01 *U*	0.0096 *U*	0.01 *U*	0.0096 *U*	0.0098 *U*	0.0097 *U*	0.0096 *U*
Chrysene	**0.000018**	1.8E-06	0.000018	1.8E-06	*0.0002*	0.0092	--	--	--	--	0.01 *U*	0.0096 *U*	0.01 *U*	0.0096 *U*	0.0098 *U*	0.0097 *U*	0.0096 *U*
Dibenz(a,h)anthracene	**0.000018**	1.8E-06	0.000018	1.8E-06	0.0002	*9.2E-06*	--	--	--	--	0.01 *U*	0.0096 *U*	0.01 *U*	0.0096 *U*	0.0098 *U*	0.0097 *U*	0.0096 *U*
Fluoranthene	**0.14**	0.014	0.14	0.014	*0.0002*	1.5	--	--	--	--	0.01 *U*	0.0096 *U*	0.01 *U*	0.0096 *U*	0.0098 *U*	0.0097 *U*	0.0096 *U*
Fluorene	**5.3**	0.53	5.3	0.53	*0.0002*	0.24	--	--	0.0039	--	0.01 *U*	0.0096 *U*	0.01 *U*	0.0096 *U*	0.0098 *U*	0.0097 *U*	0.0096 *U*
High Molecular Weight PAH	--	--	--	--	--	--	--	--	--	--	0.01 *UT*	0.0096 *UT*	0.01 *UT*	0.0096 *UT*	0.0098 *UT*	0.0097 *UT*	0.0096 *UT*
Indeno(1,2,3-cd)pyrene	**0.000018**	1.8E-06	0.000018	1.8E-06	0.0002	*0.000092*	--	--	--	--	0.01 *U*	0.0096 *U*	0.01 *U*	0.0096 *U*	0.0098 *U*	0.0097 *U*	0.0096 *U*
Low Molecular Weight PAH	--	--	--	--	--	--	--	--	--	--	0.01 *UT*	0.0096 *UT*	0.01 *UT*	0.0096 *UT*	0.0098 *UT*	0.0097 *UT*	0.0096 *UT*
Naphthalene	--	--	--	--	*0.0002*	0.0062	--	0.62	0.012	--	0.01 *U*	0.0096 *U*	0.01 *U*	0.0096 *U*	0.0098 *U*	0.0097 *U*	0.0096 *U*
Phenanthrene	--	--	--	--	*0.0002*	--	--	--	--	--	0.01 *U*	0.0096 *U*	0.01 *U*	0.0096 *U*	0.0098 *U*	0.0097 *U*	0.0096 *U*
Polycyclic Aromatic Hydrocarbons	--	--	--	--	--	--	--	--	--	--	0.01 *UT*	0.0096 *UT*	0.01 *UT*	0.0096 *UT*	0.0098 *UT*	0.0097 *UT*	0.0096 *UT*
Pyrene	**4**	0.4	4	0.4	*0.0002*	0.18	--	--	--	--	0.01 *U*	0.0096 *U*	0.01 *U*	0.0096 *U*	0.0098 *U*	0.0097 *U*	0.0096 *U*
Pesticides																	
4,4'-DDD	**3.1E-07**	3.1E-08	3.1E-07	3.1E-08	--	*0.00028*	--	--	0.000011	--	0.00004 *U*	0.000039 *U*	0.000039 *U*	0.00004 *U*	0.0000098 *U*	**0.000077**	**0.000018**
4,4'-DDE	**2.2E-07**	2.2E-08	2.2E-07	2.2E-08	--	*0.0002*	--	--	--	--	**0.00013**	**0.000069**	0.000039 *U*	0.00004 *U*	**0.000018**	**0.00017**	**0.000047**
4,4'-DDT	**2.2E-07**	2.2E-08	2.2E-07	2.2E-08	--	*0.0002*	0.000001	0.000001	0.000013	--	***0.00046***	**0.000067**	0.000039 *U*	**0.000073**	**0.000049**	***0.00058***	**0.00014**
Total of 4,4'-DDD, -DDE, -DDT	--	--	--	--	--	*0.0002*	--	--	--	--	*0.00059 T*	0.000136 *T*	0.000039 *UT*	0.000073 *T*	0.000067 *T*	*0.000827 T*	*0.000205 T*
Phenols																	
Pentachlorophenol	**0.003**	0.0003	0.003	0.0003	0.001	*0.00056*	0.015	--	--	--	0.025 *U*	0.024 *U*	0.025 *U*	0.024 *U*	0.025 *U*	***0.13***	0.024 *U*
VOCs																	
Chlorobenzene	**1.6**	0.16	1.6	0.16	*0.1*	0.11	--	0.05	0.064	--	0.005 *U*	0.005 *U*	0.005 *U*	0.005 *U*	0.005 *U*	0.005 *U*	0.005 *U*

Notes:

The perchlorate SLV of 3.6 ppb in the JSCS was replaced with EPA's DWEL of 24.5 ppb

Bold Fonts indicates the Human Health Fish Consumption screening level value used for screening (JSCS Screening Levels for Water) AND indicates an exceedance of this screening level value (data).

Italic Fonts indicates the Human Health Drinking Water screening level value used for screening (JSCS Screening Levels for Water) AND indicates an exceedance this screening level value (data).

Underline Font indicates the Ecological Receptor screening level value used for screening (JSCS Screening Levles for Water) AND indicates an exceedance of this screening level value (data).

indicates an exceedance of more than one screening level value.

Table 1.
2004/2005 Stormwater Characterization Data, Arkema, Inc. Portland Oregon Facility.

	JSCS Screening Levels for Water																
	Human Health						Ecological Receptors										
	Fish Consumption				Drinking Water												
	EPA's 2004 NRWQC (organism only)		DEQ's 2004 AWQC (organism only)		MCL	Tap Water PRGs	EPA's 2004 NRWQC (chronic)	DEQ's 2004 AWQC (chronic)	Oak Ridge National Laboratory's Tier II SCV	Outfall 001	Outfall 001	Outfall 001	Outfall 002	Outfall 002	Outfall 002	Outfall 002	Outfall 002
Analyte	17.5 g/day	175 g/day	17.5 g/day	175 g/day						12/14/2004	1/18/2005	3/29/2005	2/1/2004	3/30/2004	4/20/2004	5/28/2004	8/24/2004
Aroclors																	
Aroclor 1016	**6.4E-08**	6.4E-09	6.4E-08	6.4E-09	--	*0.00096*	0.000014	0.000014	--	0.00096 *U*	0.00096 *U*	0.00096 *U*	--	0.001 *U*	0.00096 *U*	0.00097 *U*	0.00097 *U*
Aroclor 1221	**6.4E-08**	6.4E-09	6.4E-08	6.4E-09	--	*0.000034*	0.000014	0.000014	0.00028	0.00096 *U*	0.00096 *U*	0.00096 *U*	--	0.001 *U*	0.00096 *U*	0.00097 *U*	0.00097 *U*
Aroclor 1232	**6.4E-08**	6.4E-09	6.4E-08	6.4E-09	--	*0.000034*	0.000014	0.000014	0.00058	0.00096 *U*	0.00096 *U*	0.00096 *U*	--	0.001 *U*	0.00096 *U*	0.00097 *U*	0.00097 *U*
Aroclor 1242	**6.4E-08**	6.4E-09	6.4E-08	6.4E-09	--	*0.000034*	0.000014	0.000014	0.000053	0.00096 *U*	0.00096 *U*	0.00096 *U*	--	0.001 *U*	0.00096 *U*	0.00097 *U*	0.00097 *U*
Aroclor 1248	**6.4E-08**	6.4E-09	6.4E-08	6.4E-09	--	*0.000034*	0.000014	0.000014	0.000081	0.00096 *U*	0.00096 *U*	0.00096 *U*	--	0.001 *U*	0.00096 *U*	0.00097 *U*	0.00097 *U*
Aroclor 1254	**6.4E-08**	6.4E-09	6.4E-08	6.4E-09	--	*0.000034*	0.000014	0.000014	0.000033	0.00096 *U*	0.00096 *U*	0.00096 *U*	--	0.001 *U*	0.00096 *U*	0.00097 *U*	0.00097 *U*
Aroclor 1260	**6.4E-08**	6.4E-09	6.4E-08	6.4E-09	--	*0.000034*	0.000014	0.000014	0.094	0.00096 *U*	0.00096 *U*	0.00096 *U*	--	0.001 *U*	0.00096 *U*	0.00097 *U*	0.00097 *U*
Aroclors	**6.4E-08**	6.4E-09	6.4E-08	6.4E-09	0.0005	*0.000034*	0.000014	0.000014	0.00014	0.00096 *UT*	0.00096 *UT*	0.00096 *UT*	--	0.001 *UT*	0.00096 *UT*	0.00097 *UT*	0.00097 *UT*
Conventionals																	
Chloride	--	--	--	--	--	--	--	--	--	21.7	37.9	19.4	--	16.8	4.2	7.3	7.5
Perchlorate	--	--	--	--	--	*0.245*	--	--	--	*0.28*	*0.212*	*0.084*	--	0.0051	0.0101	0.0083	0.0088
Metals																	
Chromium hexavalent	--	--	--	--	--	*0.11*	0.011	0.011	--	0.01 *U*	0.01 *U*	0.0101	--	0.01 *U*	--	0.01 *U*	0.01 *U*
Chromium	--	--	--	--	*0.01*	--	--	--	--	--	--	--	--	--	0.01 *U*	--	--
Iron	--	--	--	--	--	--	--	--	--	1.69	4.53	1.68	1.05	2.52	2.6	2.44	1.36
Manganese	**0.1**	0.01	0.1	0.01	*0.05*	0.88	--	--	0.12	0.029	*0.0741*	0.0356	0.0171	*0.059*	*0.0657*	0.0479	0.0435
Mercury	--	--	**0.000146**	1.46E-05	*0.002*	0.011	0.00077	0.000012	0.0013	0.0002 *U*	0.0002 *U*	0.0002 *U*	--	**0.0003**	0.0002 *U*	0.0002 *U*	0.0002 *U*
PAHs																	
Acenaphthene	**0.99**	0.099	0.99	0.099	*0.0002*	0.37	--	0.52	--	0.0096 *U*	0.0095 *U*	0.0095 *U*	--	0.0098 *U*	0.0096 *U*	0.01 *U*	0.0096 *U*
Acenaphthylene	--	--	--	--	*0.0002*	--	--	--	--	0.0096 *U*	0.0095 *U*	0.0095 *U*	--	0.0098 *U*	0.0096 *U*	0.01 *U*	0.0096 *U*
Anthracene	**40**	4	40	4	*0.0002*	1.8	--	--	0.00073	0.0096 *U*	0.0095 *U*	0.0095 *U*	--	0.0098 *U*	0.0096 *U*	0.01 *U*	0.0096 *U*
Benz(a)anthracene	**0.000018**	1.8E-06	0.000018	1.8E-06	0.0002	*0.000092*	--	--	0.000027	0.0096 *U*	0.0095 *U*	0.0095 *U*	--	0.0098 *U*	0.0096 *U*	0.01 *U*	0.0096 *U*
Benzo(a)pyrene	**0.000018**	1.8E-06	0.000018	1.8E-06	0.0002	*9.2E-06*	--	--	0.000014	0.0096 *U*	0.0095 *U*	0.0095 *U*	--	0.0098 *U*	0.0096 *U*	0.01 *U*	0.0096 *U*
Benzo(b)fluoranthene	**0.000018**	1.8E-06	0.000018	1.8E-06	0.0002	*0.000092*	--	--	--	0.0096 *U*	0.0095 *U*	0.0095 *U*	--	0.0098 *U*	0.0096 *U*	0.01 *U*	0.0096 *U*
Benzo(g,h,i)perylene	--	--	--	--	*0.0002*	--	--	--	--	0.0096 *U*	0.0095 *U*	0.0095 *U*	--	0.0098 *U*	0.0096 *U*	0.01 *U*	0.0096 *U*
Benzo(k)fluoranthene	**0.000018**	1.8E-06	0.000018	1.8E-06	*0.0002*	0.00092	--	--	--	0.0096 *U*	0.0095 *U*	0.0095 *U*	--	0.0098 *U*	0.0096 *U*	0.01 *U*	0.0096 *U*
Chrysene	**0.000018**	1.8E-06	0.000018	1.8E-06	*0.0002*	0.0092	--	--	--	0.0096 *U*	0.0095 *U*	0.0095 *U*	--	0.0098 *U*	0.0096 *U*	0.01 *U*	0.0096 *U*
Dibenz(a,h)anthracene	**0.000018**	1.8E-06	0.000018	1.8E-06	0.0002	*9.2E-06*	--	--	--	0.0096 *U*	0.0095 *U*	0.0095 *U*	--	0.0098 *U*	0.0096 *U*	0.01 *U*	0.0096 *U*
Fluoranthene	**0.14**	0.014	0.14	0.014	*0.0002*	1.5	--	--	--	0.0096 *U*	0.0095 *U*	0.0095 *U*	--	0.0098 *U*	0.0096 *U*	0.01 *U*	0.0096 *U*
Fluorene	**5.3**	0.53	5.3	0.53	*0.0002*	0.24	--	--	0.0039	0.0096 *U*	0.0095 *U*	0.0095 *U*	--	0.0098 *U*	0.0096 *U*	0.01 *U*	0.0096 *U*
High Molecular Weight PAH	--	--	--	--	--	--	--	--	--	0.0096 *UT*	0.0095 *UT*	0.0095 *UT*	--	0.0098 *UT*	0.0096 *UT*	0.01 *UT*	0.0096 *UT*
Indeno(1,2,3-cd)pyrene	**0.000018**	1.8E-06	0.000018	1.8E-06	0.0002	*0.000092*	--	--	--	0.0096 *U*	0.0095 *U*	0.0095 *U*	--	0.0098 *U*	0.0096 *U*	0.01 *U*	0.0096 *U*
Low Molecular Weight PAH	--	--	--	--	--	--	--	--	--	0.0096 *UT*	0.0095 *UT*	0.0095 *UT*	--	0.0098 *UT*	0.0096 *UT*	0.01 *UT*	0.0096 *UT*
Naphthalene	--	--	--	--	*0.0002*	0.0062	--	0.62	0.012	0.0096 *U*	0.0095 *U*	0.0095 *U*	--	0.0098 *U*	0.0096 *U*	0.01 *U*	0.0096 *U*
Phenanthrene	--	--	--	--	*0.0002*	--	--	--	--	0.0096 *U*	0.0095 *U*	0.0095 *U*	--	0.0098 *U*	0.0096 *U*	0.01 *U*	0.0096 *U*
Polycyclic Aromatic Hydrocarbons	--	--	--	--	--	--	--	--	--	0.0096 *UT*	0.0095 *UT*	0.0095 *UT*	--	0.0098 *UT*	0.0096 *UT*	0.01 *UT*	0.0096 *UT*
Pyrene	**4**	0.4	4	0.4	*0.0002*	0.18	--	--	--	0.0096 *U*	0.0095 *U*	0.0095 *U*	--	0.0098 *U*	0.0096 *U*	0.01 *U*	0.0096 *U*
Pesticides																	
4,4'-DDD	**3.1E-07**	3.1E-08	3.1E-07	3.1E-08	--	*0.00028*	--	--	0.000011	**0.000062**	**0.000038**	**0.00004**	--	0.000045 *U*	0.000039 *U*	0.000039 *U*	0.000039 *U*
4,4'-DDE	**2.2E-07**	2.2E-08	2.2E-07	2.2E-08	--	*0.0002*	--	--	--	***0.00076***	**0.0002**	***0.00037***	--	***0.00028***	**0.000044**	***0.00028***	**0.00011**
4,4'-DDT	**2.2E-07**	2.2E-08	2.2E-07	2.2E-08	--	*0.0002*	0.000001	0.000001	0.000013	***0.00072***	***0.00036***	***0.00045***	--	***0.00039***	**0.00019**	***0.00049***	***0.00041***
Total of 4,4'-DDD, -DDE, -DDT	--	--	--	--	--	*0.0002*	--	--	--	*0.001542 T*	*0.000598 T*	*0.00086 T*	--	*0.00067 T*	*0.000234 T*	*0.00077 T*	*0.00052 T*
Phenols																	
Pentachlorophenol	**0.003**	0.0003	0.003	0.0003	0.001	*0.00056*	0.015	--	--	0.024 *U*	0.024 *U*	0.024 *U*	--	0.025 *U*	0.024 *U*	0.025 *U*	0.024 *U*
VOCs																	
Chlorobenzene	**1.6**	0.16	1.6	0.16	*0.1*	0.11	--	0.05	0.064	0.005 *U*	0.005 *U*	0.005 *U*	--	0.005 *U*	0.005 *U*	0.005 *U*	0.005 *U*

Notes:

The perchlorate SLV of 3.6 ppb in the JSCS was replaced with EPA's DWEL of 24.5 ppb

Bold Fonts indicates the Human Health Fish Consumption screening level value used for screening (JSCS Screening Leve

Italic Fonts indicates the Human Health Drinking Water screening level value used for screening (JSCS Screening Levels f

Underline Font indicates the Ecological Receptor screening level value used for screening (JSCS Screening Levles for Water)

indicates an exceedance of more than one screening level value.

Table 1.
2004/2005 Stormwater Characterization Data, Arkema, Inc. Portland Oregon Facility.

	JSCS Screening Levels for Water																
	Human Health						Ecological Receptors										
	Fish Consumption				Drinking Water												
	EPA's 2004 NRWQC (organism only)		DEQ's 2004 AWQC (organism only)		MCL	Tap Water PRGs	EPA's 2004 NRWQC (chronic)	DEQ's 2004 AWQC (chronic)	Oak Ridge National Laboratory's Tier II SCV	Outfall 002	Outfall 002	Outfall 002	Outfall 002	Outfall 002	Outfall 002	Outfall 003	Outfall 003
Analyte	17.5 g/day	175 g/day	17.5 g/day	175 g/day						9/13/2004	10/1/2004	11/24/2004	12/14/2004	1/18/2005	3/29/2004	2/1/2004	3/30/2004
Aroclors																	
Aroclor 1016	**6.4E-08**	6.4E-09	6.4E-08	6.4E-09	--	*0.00096*	0.000014	0.000014	--	0.00097 *U*	0.0002 *U*	0.00096 *U*	0.00096 *U*	0.00096 *U*	0.00096 *U*	--	0.00098 *U*
Aroclor 1221	**6.4E-08**	6.4E-09	6.4E-08	6.4E-09	--	*0.000034*	0.000014	0.000014	0.00028	0.00097 *U*	0.00039 *U*	0.00096 *U*	0.00096 *U*	0.00096 *U*	0.00096 *U*	--	0.00098 *U*
Aroclor 1232	**6.4E-08**	6.4E-09	6.4E-08	6.4E-09	--	*0.000034*	0.000014	0.000014	0.00058	0.00097 *U*	0.0002 *U*	0.00096 *U*	0.00096 *U*	0.00096 *U*	0.00096 *U*	--	0.00098 *U*
Aroclor 1242	**6.4E-08**	6.4E-09	6.4E-08	6.4E-09	--	*0.000034*	0.000014	0.000014	0.000053	0.00097 *U*	0.0002 *U*	0.00096 *U*	0.00096 *U*	0.00096 *U*	0.00096 *U*	--	0.00098 *U*
Aroclor 1248	**6.4E-08**	6.4E-09	6.4E-08	6.4E-09	--	*0.000034*	0.000014	0.000014	0.000081	0.00097 *U*	0.0002 *U*	0.00096 *U*	0.00096 *U*	0.00096 *U*	0.00096 *U*	--	0.00098 *U*
Aroclor 1254	**6.4E-08**	6.4E-09	6.4E-08	6.4E-09	--	*0.000034*	0.000014	0.000014	0.000033	0.00097 *U*	0.0002 *U*	0.00096 *U*	0.00096 *U*	0.00096 *U*	0.00096 *U*	--	0.00098 *U*
Aroclor 1260	**6.4E-08**	6.4E-09	6.4E-08	6.4E-09	--	*0.000034*	0.000014	0.000014	0.094	0.00097 *U*	0.00075 *U*	0.00096 *U*	0.00096 *U*	0.00096 *U*	0.00096 *U*	--	0.00098 *U*
Aroclors	**6.4E-08**	6.4E-09	6.4E-08	6.4E-09	0.0005	*0.000034*	0.000014	0.000014	0.00014	0.00097 *UT*	0.0002 *UT*	0.00096 *UT*	0.00096 *UT*	0.00096 *UT*	0.00096 *UT*	--	0.00098 *UT*
Conventionals																	
Chloride	--	--	--	--	--	--	--	--	--	6.7	2.6	6.1	2.5	0.7	3.2	--	2.3
Perchlorate	--	--	--	--	--	*0.245*	--	--	--	0.0042	0.002 *U*	0.0166	0.0042	0.0031	0.0109	--	0.0078
Metals																	
Chromium hexavalent	--	--	--	--	--	*0.11*	0.011	0.011	--	0.01 *U*	0.01 *U*	0.01 *U*	0.01 *U*	0.01 *U*	0.01 *U*	--	0.01 *U*
Chromium	--	--	--	--	*0.01*	--	--	--	--	--	--	--	--	--	--	--	--
Iron	--	--	--	--	--	--	--	--	--	1.5	2.62	2.37	0.81	1.89	0.96	0.466	1.93
Manganese	**0.1**	0.01	0.1	0.01	*0.05*	0.88	--	--	0.12	*0.0881*	0.0385	0.0483	0.0141	0.0338	0.0205	0.0093	*0.0735*
Mercury	--	--	**0.000146**	1.46E-05	*0.002*	0.011	0.00077	0.000012	0.0013	0.0002 *U*	0.0002 *U*	0.0002 *U*	0.0002 *U*	0.0002 *U*	0.0002 *U*	--	**0.0002**
PAHs																	
Acenaphthene	**0.99**	0.099	0.99	0.099	*0.0002*	0.37	--	0.52	--	0.0098 *U*	0.0096 *U*	0.0096 *U*	0.0096 *U*	0.01 *U*	0.0096 *U*	--	0.0096 *U*
Acenaphthylene	--	--	--	--	*0.0002*	--	--	--	--	0.0098 *U*	0.0096 *U*	0.0096 *U*	0.0096 *U*	0.01 *U*	0.0096 *U*	--	0.0096 *U*
Anthracene	**40**	4	40	4	*0.0002*	1.8	--	--	0.00073	0.0098 *U*	0.0096 *U*	0.0096 *U*	0.0096 *U*	0.01 *U*	0.0096 *U*	--	0.0096 *U*
Benz(a)anthracene	**0.000018**	1.8E-06	0.000018	1.8E-06	0.0002	*0.000092*	--	--	0.000027	0.0098 *U*	0.0096 *U*	0.0096 *U*	0.0096 *U*	0.01 *U*	0.0096 *U*	--	0.0096 *U*
Benzo(a)pyrene	**0.000018**	1.8E-06	0.000018	1.8E-06	0.0002	*9.2E-06*	--	--	0.000014	0.0098 *U*	0.0096 *U*	0.0096 *U*	0.0096 *U*	0.01 *U*	0.0096 *U*	--	0.0096 *U*
Benzo(b)fluoranthene	**0.000018**	1.8E-06	0.000018	1.8E-06	0.0002	*0.000092*	--	--	--	0.0098 *U*	0.0096 *U*	0.0096 *U*	0.0096 *U*	0.01 *U*	0.0096 *U*	--	0.0096 *U*
Benzo(g,h,i)perylene	--	--	--	--	*0.0002*	--	--	--	--	0.0098 *U*	0.0096 *U*	0.0096 *U*	0.0096 *U*	0.01 *U*	0.0096 *U*	--	0.0096 *U*
Benzo(k)fluoranthene	**0.000018**	1.8E-06	0.000018	1.8E-06	*0.0002*	0.00092	--	--	--	0.0098 *U*	0.0096 *U*	0.0096 *U*	0.0096 *U*	0.01 *U*	0.0096 *U*	--	0.0096 *U*
Chrysene	**0.000018**	1.8E-06	0.000018	1.8E-06	*0.0002*	0.0092	--	--	--	0.0098 *U*	0.0096 *U*	0.0096 *U*	0.0096 *U*	0.01 *U*	0.0096 *U*	--	0.0096 *U*
Dibenz(a,h)anthracene	**0.000018**	1.8E-06	0.000018	1.8E-06	0.0002	*9.2E-06*	--	--	--	0.0098 *U*	0.0096 *U*	0.0096 *U*	0.0096 *U*	0.01 *U*	0.0096 *U*	--	0.0096 *U*
Fluoranthene	**0.14**	0.014	0.14	0.014	*0.0002*	1.5	--	--	--	0.0098 *U*	0.0096 *U*	0.0096 *U*	0.0096 *U*	0.01 *U*	0.0096 *U*	--	0.0096 *U*
Fluorene	**5.3**	0.53	5.3	0.53	*0.0002*	0.24	--	--	0.0039	0.0098 *U*	0.0096 *U*	0.0096 *U*	0.0096 *U*	0.01 *U*	0.0096 *U*	--	0.0096 *U*
High Molecular Weight PAH	--	--	--	--	--	--	--	--	--	0.0098 *UT*	0.0096 *UT*	0.0096 *UT*	0.0096 *UT*	0.01 *UT*	0.0096 *UT*	--	0.0096 *UT*
Indeno(1,2,3-cd)pyrene	**0.000018**	1.8E-06	0.000018	1.8E-06	0.0002	*0.000092*	--	--	--	0.0098 *U*	0.0096 *U*	0.0096 *U*	0.0096 *U*	0.01 *U*	0.0096 *U*	--	0.0096 *U*
Low Molecular Weight PAH	--	--	--	--	--	--	--	--	--	0.0098 *UT*	0.0096 *UT*	0.0096 *UT*	0.0096 *UT*	0.01 *UT*	0.0096 *UT*	--	0.01 *UT*
Naphthalene	--	--	--	--	*0.0002*	0.0062	--	0.62	0.012	0.0098 *U*	0.0096 *U*	0.0096 *U*	0.0096 *U*	0.01 *U*	0.0096 *U*	--	0.01 *U*
Phenanthrene	--	--	--	--	*0.0002*	--	--	--	--	0.0098 *U*	0.0096 *U*	0.0096 *U*	0.0096 *U*	0.01 *U*	0.0096 *U*	--	0.0096 *U*
Polycyclic Aromatic Hydrocarbons	--	--	--	--	--	--	--	--	--	0.0098 *UT*	0.0096 *UT*	0.0096 *UT*	0.0096 *UT*	0.01 *UT*	0.0096 *UT*	--	0.01 *UT*
Pyrene	**4**	0.4	4	0.4	*0.0002*	0.18	--	--	--	0.0098 *U*	0.0096 *U*	0.0096 *U*	0.0096 *U*	0.01 *U*	0.0096 *U*	--	0.0096 *U*
Pesticides																	
4,4'-DDD	**3.1E-07**	3.1E-08	3.1E-07	3.1E-08	--	*0.00028*	--	--	0.000011	**0.000014**	**0.000082**	**0.000016**	**0.000035**	**0.000038**	**0.000032**	--	0.000039 *U*
4,4'-DDE	**2.2E-07**	2.2E-08	2.2E-07	2.2E-08	--	*0.0002*	--	--	--	**0.00011**	***0.00026***	**0.0001**	***0.00025***	***0.00028***	**0.00019**	--	0.000039 *U*
4,4'-DDT	**2.2E-07**	2.2E-08	2.2E-07	2.2E-08	--	*0.0002*	0.000001	0.000001	0.000013	***0.00033***	***0.00087***	***0.0003***	***0.00069***	***0.0008***	***0.00057***	--	***0.00021***
Total of 4,4'-DDD, -DDE, -DDT	--	--	--	--	--	*0.0002*	--	--	--	*0.000454 T*	*0.001212 T*	*0.000416 T*	*0.000975 T*	*0.001118 T*	*0.000792 T*	--	*0.00021 T*
Phenols																	
Pentachlorophenol	**0.003**	0.0003	0.003	0.0003	0.001	*0.00056*	0.015	--	--	0.025 *U*	0.025 *U*	0.024 *U*	0.024 *U*	0.024 *U*	0.024 *U*	--	0.025 *U*
VOCs																	
Chlorobenzene	**1.6**	0.16	1.6	0.16	*0.1*	0.11	--	0.05	0.064	0.005 *U*	0.005 *U*	0.005 *U*	0.005 *U*	0.005 *U*	0.005 *U*	--	0.005 *U*

Notes:

The perchlorate SLV of 3.6 ppb in the JSCS was replaced with EPA's DWEL of 24.5 ppb

Bold Fonts indicates the Human Health Fish Consumption screening level value used for screening (JSCS Screening Leve

Italic Fonts indicates the Human Health Drinking Water screening level value used for screening (JSCS Screening Levels f

Underline Font indicates the Ecological Receptor screening level value used for screening (JSCS Screening Levles for Water)

indicates an exceedance of more than one screening level value.

Table 1.
2004/2005 Stormwater Characterization Data, Arkema, Inc. Portland Oregon Facility.

	JSCS Screening Levels for Water																	
	Human Health						Ecological Receptors											
	Fish Consumption				Drinking Water													
	EPA's 2004 NRWQC (organism only)		DEQ's 2004 AWQC (organism only)		MCL	Tap Water PRGs	EPA's 2004 NRWQC (chronic)	DEQ's 2004 AWQC (chronic)	Oak Ridge National Laboratory's Tier II SCV	Outfall 003	Outfall 003	Outfall 003	Outfall 003	Outfall 003	Outfall 003	Outfall 003	Outfall 003	Outfall 003
Analyte	17.5 g/day	175 g/day	17.5 g/day	175 g/day						4/20/2004	5/28/2004	8/24/2004	9/13/2004	10/1/2004	11/24/2004	12/14/2004	1/18/2005
Aroclors																		
Aroclor 1016	**6.4E-08**	6.4E-09	6.4E-08	6.4E-09	--	*0.00096*	0.000014	0.000014	--	0.00096 *U*	0.00098 *U*	0.00096 *U*	0.00096 *U*	0.00095 *U*	0.00096 *U*	0.00096 *U*	0.00096 *U*
Aroclor 1221	**6.4E-08**	6.4E-09	6.4E-08	6.4E-09	--	*0.000034*	0.000014	0.000014	0.00028	0.00096 *U*	0.00098 *U*	0.00096 *U*	0.00096 *U*	0.0019 *U*	0.00096 *U*	0.00096 *U*	0.00096 *U*
Aroclor 1232	**6.4E-08**	6.4E-09	6.4E-08	6.4E-09	--	*0.000034*	0.000014	0.000014	0.00058	0.00096 *U*	0.00098 *U*	0.00096 *U*	0.00096 *U*	0.00095 *U*	0.00096 *U*	0.00096 *U*	0.00096 *U*
Aroclor 1242	**6.4E-08**	6.4E-09	6.4E-08	6.4E-09	--	*0.000034*	0.000014	0.000014	0.000053	0.00096 *U*	0.00098 *U*	0.00096 *U*	0.00096 *U*	0.00095 *U*	0.00096 *U*	0.00096 *U*	0.00096 *U*
Aroclor 1248	**6.4E-08**	6.4E-09	6.4E-08	6.4E-09	--	*0.000034*	0.000014	0.000014	0.000081	0.00096 *U*	0.00098 *U*	0.00096 *U*	0.00096 *U*	0.00095 *U*	0.00096 *U*	0.00096 *U*	0.00096 *U*
Aroclor 1254	**6.4E-08**	6.4E-09	6.4E-08	6.4E-09	--	*0.000034*	0.000014	0.000014	0.000033	0.00096 *U*	0.00098 *U*	0.00096 *U*	0.00096 *U*	0.0012 *U*	0.00096 *U*	0.00096 *U*	0.00096 *U*
Aroclor 1260	**6.4E-08**	6.4E-09	6.4E-08	6.4E-09	--	*0.000034*	0.000014	0.000014	0.094	0.00096 *U*	0.00098 *U*	0.00096 *U*	0.00096 *U*	0.00095 *U*	0.00096 *U*	0.00096 *U*	0.00096 *U*
Aroclors	**6.4E-08**	6.4E-09	6.4E-08	6.4E-09	0.0005	*0.000034*	0.000014	0.000014	0.00014	0.00096 *UT*	0.00098 *UT*	0.00096 *UT*	0.00096 *UT*	0.0012 *UT*	0.00096 *UT*	0.00096 *UT*	0.00096 *UT*
Conventionals																		
Chloride	--	--	--	--	--	--	--	--	--	3.4	3.7	20.6	5.3	47.7	6.5	14.7	6.6
Perchlorate	--	--	--	--	--	*0.245*	--	--	--	*0.0266*	0.0021	0.0179	0.002	0.0082	0.002 *U*	0.0042	0.002 *U*
Metals																		
Chromium hexavalent	--	--	--	--	--	*0.11*	0.011	0.011	--	--	0.01 *U*	0.01 *U*	0.01 *U*	0.01 *U*	0.01 *U*	0.01 *U*	0.0112
Chromium	--	--	--	--	*0.01*	--	--	--	--	0.01 *U*	--	--	--	--	--	--	--
Iron	--	--	--	--	--	--	--	--	--	0.791	0.609	2.43	2.05	5.94	1.39	2.27	2.45
Manganese	**0.1**	0.01	0.1	0.01	*0.05*	0.88	--	--	0.12	0.02	0.0148	0.0497	0.0415	*0.0728*	0.0366	0.0374	0.0382
Mercury	--	--	**0.000146**	1.46E-05	*0.002*	0.011	0.00077	0.000012	0.0013	0.0002 *U*	0.0002 *U*	0.0002 *U*	0.0002 *U*	0.0002 *U*	0.0002 *U*	0.0002 *U*	0.0002 *U*
PAHs																		
Acenaphthene	**0.99**	0.099	0.99	0.099	*0.0002*	0.37	--	0.52	--	0.0096 *U*	0.0098 *U*	0.0096 *U*	0.0099 *U*	0.0096 *U*	0.0096 *U*	0.011 *U*	0.0096 *U*
Acenaphthylene	--	--	--	--	*0.0002*	--	--	--	--	0.0096 *U*	0.0098 *U*	0.0096 *U*	0.0099 *U*	0.0096 *U*	0.0096 *U*	0.011 *U*	0.0096 *U*
Anthracene	**40**	4	40	4	*0.0002*	1.8	--	--	0.00073	0.0096 *U*	0.0098 *U*	0.0096 *U*	0.0099 *U*	0.0096 *U*	0.0096 *U*	0.011 *U*	0.0096 *U*
Benz(a)anthracene	**0.000018**	1.8E-06	0.000018	1.8E-06	0.0002	*0.000092*	--	--	0.000027	0.0096 *U*	0.0098 *U*	0.0096 *U*	0.0099 *U*	0.0096 *U*	0.0096 *U*	0.011 *U*	0.0096 *U*
Benzo(a)pyrene	**0.000018**	1.8E-06	0.000018	1.8E-06	0.0002	*9.2E-06*	--	--	0.000014	0.0096 *U*	0.0098 *U*	0.0096 *U*	0.0099 *U*	0.0096 *U*	0.0096 *U*	0.011 *U*	0.0096 *U*
Benzo(b)fluoranthene	**0.000018**	1.8E-06	0.000018	1.8E-06	0.0002	*0.000092*	--	--	--	0.0096 *U*	0.0098 *U*	0.0096 *U*	0.0099 *U*	0.0096 *U*	0.0096 *U*	0.011 *U*	0.0096 *U*
Benzo(g,h,i)perylene	--	--	--	--	*0.0002*	--	--	--	--	0.0096 *U*	0.0098 *U*	0.0096 *U*	0.0099 *U*	0.0096 *U*	0.0096 *U*	0.011 *U*	0.0096 *U*
Benzo(k)fluoranthene	**0.000018**	1.8E-06	0.000018	1.8E-06	*0.0002*	0.00092	--	--	--	0.0096 *U*	0.0098 *U*	0.0096 *U*	0.0099 *U*	0.0096 *U*	0.0096 *U*	0.011 *U*	0.0096 *U*
Chrysene	**0.000018**	1.8E-06	0.000018	1.8E-06	*0.0002*	0.0092	--	--	--	0.0096 *U*	0.0098 *U*	0.0096 *U*	0.0099 *U*	0.0096 *U*	0.0096 *U*	0.011 *U*	0.0096 *U*
Dibenz(a,h)anthracene	**0.000018**	1.8E-06	0.000018	1.8E-06	0.0002	*9.2E-06*	--	--	--	0.0096 *U*	0.0098 *U*	0.0096 *U*	0.0099 *U*	0.0096 *U*	0.0096 *U*	0.011 *U*	0.0096 *U*
Fluoranthene	**0.14**	0.014	0.14	0.014	*0.0002*	1.5	--	--	--	0.0096 *U*	0.0098 *U*	0.0096 *U*	0.0099 *U*	0.0096 *U*	0.0096 *U*	0.011 *U*	0.0096 *U*
Fluorene	**5.3**	0.53	5.3	0.53	*0.0002*	0.24	--	--	0.0039	0.0096 *U*	0.0098 *U*	0.0096 *U*	0.0099 *U*	0.0096 *U*	0.0096 *U*	0.011 *U*	0.0096 *U*
High Molecular Weight PAH	--	--	--	--	--	--	--	--	--	0.0096 *UT*	0.0098 *UT*	0.0096 *UT*	0.0099 *UT*	0.0096 *UT*	0.0096 *UT*	0.011 *UT*	0.0096 *UT*
Indeno(1,2,3-cd)pyrene	**0.000018**	1.8E-06	0.000018	1.8E-06	0.0002	*0.000092*	--	--	--	0.0096 *U*	0.0098 *U*	0.0096 *U*	0.0099 *U*	0.0096 *U*	0.0096 *U*	0.011 *U*	0.0096 *U*
Low Molecular Weight PAH	--	--	--	--	--	--	--	--	--	0.01 *UT*	0.0098 *UT*	0.0096 *UT*	0.0099 *UT*	0.0096 *UT*	0.0096 *UT*	0.011 *UT*	0.0096 *UT*
Naphthalene	--	--	--	--	*0.0002*	0.0062	--	0.62	0.012	0.01 *U*	0.0098 *U*	0.0096 *U*	0.0099 *U*	0.0096 *U*	0.0096 *U*	0.011 *U*	0.0096 *U*
Phenanthrene	--	--	--	--	*0.0002*	--	--	--	--	0.0096 *U*	0.0098 *U*	0.0096 *U*	0.0099 *U*	0.0096 *U*	0.0096 *U*	0.011 *U*	0.0096 *U*
Polycyclic Aromatic Hydrocarbons	--	--	--	--	--	--	--	--	--	0.01 *UT*	0.0098 *UT*	0.0096 *UT*	0.0099 *UT*	0.0096 *UT*	0.0096 *UT*	0.011 *UT*	0.0096 *UT*
Pyrene	**4**	0.4	4	0.4	*0.0002*	0.18	--	--	--	0.0096 *U*	0.0098 *U*	0.0096 *U*	0.0099 *U*	0.0096 *U*	0.0096 *U*	0.011 *U*	0.0096 *U*
Pesticides																		
4,4'-DDD	**3.1E-07**	3.1E-08	3.1E-07	3.1E-08	--	*0.00028*	--	--	0.000011	0.000039 *U*	0.000039 *U*	0.000039 *U*	**0.000046**	**0.000038**	**0.000017**	**0.00005**	**0.000017**
4,4'-DDE	**2.2E-07**	2.2E-08	2.2E-07	2.2E-08	--	*0.0002*	--	--	--	***0.00031***	0.000039 *U*	**0.000044**	**0.000085**	**0.00014**	**0.000057**	**0.00011**	**0.000097**
4,4'-DDT	**2.2E-07**	2.2E-08	2.2E-07	2.2E-08	--	*0.0002*	0.000001	0.000001	0.000013	***0.0013***	**0.000063**	***0.00027***	***0.00047***	***0.00053***	**0.00016**	***0.00057***	***0.00035***
Total of 4,4'-DDD, -DDE, -DDT	--	--	--	--	--	*0.0002*	--	--	--	*0.00161 T*	0.000063 *T*	*0.000314 T*	*0.000601 T*	*0.000708 T*	*0.000234 T*	*0.00073 T*	*0.000464 T*
Phenols																		
Pentachlorophenol	**0.003**	0.0003	0.003	0.0003	0.001	*0.00056*	0.015	--	--	0.024 *U*	0.025 *U*	0.024 *U*	0.025 *U*	***0.071***	0.024 *U*	0.026 *U*	0.024 *U*
VOCs																		
Chlorobenzene	**1.6**	0.16	1.6	0.16	*0.1*	0.11	--	0.05	0.064	0.005 *U*	0.005 *U*	0.005 *U*	0.005 *U*	0.005 *U*	0.005 *U*	0.005 *U*	0.005 *U*

Notes:

The perchlorate SLV of 3.6 ppb in the JSCS was replaced with EPA's DWEL of 24.5 ppb

Bold Fonts indicates the Human Health Fish Consumption screening level value used for screening (JSCS Screening Leve

Italic Fonts indicates the Human Health Drinking Water screening level value used for screening (JSCS Screening Levels f

Underline Font indicates the Ecological Receptor screening level value used for screening (JSCS Screening Levles for Water)

indicates an exceedance of more than one screening level value.

Table 1.
2004/2005 Stormwater Characterization Data, Arkema, Inc. Portland Oregon Facility.

	JSCS Screening Levels for Water																
	Human Health						Ecological Receptors										
	Fish Consumption				Drinking Water												
	EPA's 2004 NRWQC (organism only)		DEQ's 2004 AWQC (organism only)		MCL	Tap Water PRGs	EPA's 2004 NRWQC (chronic)	DEQ's 2004 AWQC (chronic)	Oak Ridge National Laboratory's Tier II SCV	Outfall 003	Outfall 004	Outfall 004	Outfall 004	Outfall 004	Outfall 004	Outfall 004	Outfall 004
Analyte	17.5 g/day	175 g/day	17.5 g/day	175 g/day						3/29/2005	2/1/2004	3/30/2004	4/20/2004	5/28/2004	8/24/2004	9/13/2004	10/1/2004
Aroclors																	
Aroclor 1016	**6.4E-08**	6.4E-09	6.4E-08	6.4E-09	--	*0.00096*	0.000014	0.000014	--	0.00096 *U*	--	0.00099 *U*	0.00096 *U*	0.00097 *U*	0.00097 *U*	0.00097 *U*	0.00024 *U*
Aroclor 1221	**6.4E-08**	6.4E-09	6.4E-08	6.4E-09	--	*0.000034*	0.000014	0.000014	0.00028	0.00096 *U*	--	0.00099 *U*	0.00096 *U*	0.00097 *U*	0.00097 *U*	0.00097 *U*	0.00039 *U*
Aroclor 1232	**6.4E-08**	6.4E-09	6.4E-08	6.4E-09	--	*0.000034*	0.000014	0.000014	0.00058	0.00096 *U*	--	0.00099 *U*	0.00096 *U*	0.00097 *U*	0.00097 *U*	0.00097 *U*	0.00022 *U*
Aroclor 1242	**6.4E-08**	6.4E-09	6.4E-08	6.4E-09	--	*0.000034*	0.000014	0.000014	0.000053	0.00096 *U*	--	0.00099 *U*	0.00096 *U*	0.00097 *U*	0.00097 *U*	0.00097 *U*	0.0002 *U*
Aroclor 1248	**6.4E-08**	6.4E-09	6.4E-08	6.4E-09	--	*0.000034*	0.000014	0.000014	0.000081	0.00096 *U*	--	0.00099 *U*	0.00096 *U*	0.00097 *U*	0.00097 *U*	0.00097 *U*	0.00031 *U*
Aroclor 1254	**6.4E-08**	6.4E-09	6.4E-08	6.4E-09	--	*0.000034*	0.000014	0.000014	0.000033	0.00096 *U*	--	0.00099 *U*	0.00096 *U*	0.00097 *U*	0.00097 *U*	0.00097 *U*	0.00041 *U*
Aroclor 1260	**6.4E-08**	6.4E-09	6.4E-08	6.4E-09	--	*0.000034*	0.000014	0.000014	0.094	0.00096 *U*	--	0.00099 *U*	0.00096 *U*	0.00097 *U*	0.00097 *U*	0.00097 *U*	0.00037 *U*
Aroclors	**6.4E-08**	6.4E-09	6.4E-08	6.4E-09	0.0005	*0.000034*	0.000014	0.000014	0.00014	0.00096 *UT*	--	0.00099 *UT*	0.00096 *UT*	0.00097 *UT*	0.00097 *UT*	0.00097 *UT*	0.00041 *UT*
Conventionals																	
Chloride	--	--	--	--	--	--	--	--	--	7.1	--	9.72	354	241	58.1	131	37.2
Perchlorate	--	--	--	--	--	*0.245*	--	--	--	0.002 *U*	--	0.0061	0.0056	0.0099	0.0116	0.0084	*0.0407*
Metals																	
Chromium hexavalent	--	--	--	--	--	*0.11*	0.011	0.011	--	0.01 *U*	--	0.01 *U*	--	0.0102	0.0154	0.0107	0.0187
Chromium	--	--	--	--	*0.01*	--	--	--	--	--	--	--	*0.0156*	--	--	--	--
Iron	--	--	--	--	--	--	--	--	--	1.18	1.58	2.37	1.73	7.3	2.222	5.95	8.23
Manganese	**0.1**	0.01	0.1	0.01	*0.05*	0.88	--	--	0.12	0.0229	0.0368	*0.0874*	0.0438	*0.0989*	0.0422	*0.0976*	***0.128***
Mercury	--	--	**0.000146**	1.46E-05	*0.002*	0.011	0.00077	0.000012	0.0013	0.0002 *U*	--	0.0002 *U*	0.0002 *U*	0.0002 *U*	0.0002 *U*	0.0002 *U*	0.0002 *U*
PAHs																	
Acenaphthene	**0.99**	0.099	0.99	0.099	*0.0002*	0.37	--	0.52	--	0.0095 *U*	--	0.0097 *U*	0.0096 *U*	0.01 *U*	0.0096 *U*	0.01 *U*	0.0097 *U*
Acenaphthylene	--	--	--	--	*0.0002*	--	--	--	--	0.0095 *U*	--	0.0097 *U*	0.0096 *U*	0.01 *U*	0.0096 *U*	0.01 *U*	0.0097 *U*
Anthracene	**40**	4	40	4	*0.0002*	1.8	--	--	0.00073	0.0095 *U*	--	0.0097 *U*	0.0096 *U*	0.01 *U*	0.0096 *U*	0.01 *U*	0.0097 *U*
Benz(a)anthracene	**0.000018**	1.8E-06	0.000018	1.8E-06	0.0002	*0.000092*	--	--	0.000027	0.0095 *U*	--	0.0097 *U*	0.0096 *U*	0.01 *U*	0.0096 *U*	0.01 *U*	0.0097 *U*
Benzo(a)pyrene	**0.000018**	1.8E-06	0.000018	1.8E-06	0.0002	*9.2E-06*	--	--	0.000014	0.0095 *U*	--	0.0097 *U*	0.0096 *U*	0.01 *U*	0.0096 *U*	0.01 *U*	0.0097 *U*
Benzo(b)fluoranthene	**0.000018**	1.8E-06	0.000018	1.8E-06	0.0002	*0.000092*	--	--	--	0.0095 *U*	--	0.0097 *U*	0.0096 *U*	0.01 *U*	0.0096 *U*	0.01 *U*	0.0097 *U*
Benzo(g,h,i)perylene	--	--	--	--	*0.0002*	--	--	--	--	0.0095 *U*	--	0.0097 *U*	0.0096 *U*	0.01 *U*	0.0096 *U*	0.01 *U*	0.0097 *U*
Benzo(k)fluoranthene	**0.000018**	1.8E-06	0.000018	1.8E-06	*0.0002*	0.00092	--	--	--	0.0095 *U*	--	0.0097 *U*	0.0096 *U*	0.01 *U*	0.0096 *U*	0.01 *U*	0.0097 *U*
Chrysene	**0.000018**	1.8E-06	0.000018	1.8E-06	*0.0002*	0.0092	--	--	--	0.0095 *U*	--	0.0097 *U*	0.0096 *U*	0.01 *U*	0.0096 *U*	0.01 *U*	0.0097 *U*
Dibenz(a,h)anthracene	**0.000018**	1.8E-06	0.000018	1.8E-06	0.0002	*9.2E-06*	--	--	--	0.0095 *U*	--	0.0097 *U*	0.0096 *U*	0.01 *U*	0.0096 *U*	0.01 *U*	0.0097 *U*
Fluoranthene	**0.14**	0.014	0.14	0.014	*0.0002*	1.5	--	--	--	0.0095 *U*	--	0.0097 *U*	0.0096 *U*	0.01 *U*	0.0096 *U*	0.01 *U*	0.0097 *U*
Fluorene	**5.3**	0.53	5.3	0.53	*0.0002*	0.24	--	--	0.0039	0.0095 *U*	--	0.0097 *U*	0.0096 *U*	0.01 *U*	0.0096 *U*	0.01 *U*	0.0097 *U*
High Molecular Weight PAH	--	--	--	--	--	--	--	--	--	0.0095 *UT*	--	0.0097 *UT*	0.0096 *UT*	0.01 *UT*	0.0096 *UT*	0.01 *UT*	0.0097 *UT*
Indeno(1,2,3-cd)pyrene	**0.000018**	1.8E-06	0.000018	1.8E-06	0.0002	*0.000092*	--	--	--	0.0095 *U*	--	0.0097 *U*	0.0096 *U*	0.01 *U*	0.0096 *U*	0.01 *U*	0.0097 *U*
Low Molecular Weight PAH	--	--	--	--	--	--	--	--	--	0.0095 *UT*	--	0.0097 *UT*	0.0096 *UT*	0.01 *UT*	0.0096 *UT*	0.01 *UT*	0.0097 *UT*
Naphthalene	--	--	--	--	*0.0002*	0.0062	--	0.62	0.012	0.0095 *U*	--	0.0097 *U*	0.0096 *U*	0.01 *U*	0.0096 *U*	0.01 *U*	0.0097 *U*
Phenanthrene	--	--	--	--	*0.0002*	--	--	--	--	0.0095 *U*	--	0.0097 *U*	0.0096 *U*	0.01 *U*	0.0096 *U*	0.01 *U*	0.0097 *U*
Polycyclic Aromatic Hydrocarbons	--	--	--	--	--	--	--	--	--	0.0095 *UT*	--	0.0097 *UT*	0.0096 *UT*	0.01 *UT*	0.0096 *UT*	0.01 *UT*	0.0097 *UT*
Pyrene	**4**	0.4	4	0.4	*0.0002*	0.18	--	--	--	0.0095 *U*	--	0.0097 *U*	0.0096 *U*	0.01 *U*	0.0096 *U*	0.01 *U*	0.0097 *U*
Pesticides																	
4,4'-DDD	**3.1E-07**	3.1E-08	3.1E-07	3.1E-08	--	*0.00028*	--	--	0.000011	**0.000011**	--	0.00004 *U*	0.000039 *U*	0.000039 *U*	0.000039 *U*	**0.000025**	**0.000082**
4,4'-DDE	**2.2E-07**	2.2E-08	2.2E-07	2.2E-08	--	*0.0002*	--	--	--	**0.000043**	--	**0.000045**	0.000039 *U*	0.000039 *U*	0.000039 *U*	**0.000064**	**0.00016**
4,4'-DDT	**2.2E-07**	2.2E-08	2.2E-07	2.2E-08	--	*0.0002*	0.000001	0.000001	0.000013	**0.00017**	--	**0.00013**	**0.000058**	**0.00014**	**0.000078**	***0.00029***	***0.00061***
Total of 4,4'-DDD, -DDE, -DDT	--	--	--	--	--	*0.0002*	--	--	--	*0.000224 T*	--	0.000175 *T*	0.000058 *T*	0.00014 *T*	0.000078 *T*	*0.000379 T*	*0.000852 T*
Phenols																	
Pentachlorophenol	**0.003**	0.0003	0.003	0.0003	0.001	*0.00056*	0.015	--	--	0.024 *U*	--	0.025 *U*	0.024 *U*	0.025 *U*	0.024 *U*	0.025 *U*	***0.03***
VOCs																	
Chlorobenzene	**1.6**	0.16	1.6	0.16	*0.1*	0.11	--	0.05	0.064	0.005 *U*	--	0.005 *U*	0.005 *U*	0.005 *U*	0.005 *U*	0.005 *U*	0.005 *U*

Notes:

The perchlorate SLV of 3.6 ppb in the JSCS was replaced with EPA's DWEL of 24.5 ppb

Bold Fonts indicates the Human Health Fish Consumption screening level value used for screening (JSCS Screening Leve

Italic Fonts indicates the Human Health Drinking Water screening level value used for screening (JSCS Screening Levels f

Underline Font indicates the Ecological Receptor screening level value used for screening (JSCS Screening Levles for Water)

indicates an exceedance of more than one screening level value.

Table 1.
2004/2005 Stormwater Characterization Data, Arkema, Inc. Portland Oregon Facility.

	JSCS Screening Levels for Water												
	Human Health						Ecological Receptors						
	Fish Consumption				Drinking Water								
	EPA's 2004 NRWQC (organism only)		DEQ's 2004 AWQC (organism only)		MCL	Tap Water PRGs	EPA's 2004 NRWQC (chronic)	DEQ's 2004 AWQC (chronic)	Oak Ridge National Laboratory's Tier II SCV	Outfall 004	Outfall 004	Outfall 004	Outfall 004
Analyte	17.5 g/day	175 g/day	17.5 g/day	175 g/day						11/24/2004	12/14/2004	1/18/2005	3/29/2005
Aroclors													
Aroclor 1016	**6.4E-08**	6.4E-09	6.4E-08	6.4E-09	--	*0.00096*	0.000014	0.000014	--	0.00096 *U*	0.00096 *U*	0.00096 *U*	0.00096 *U*
Aroclor 1221	**6.4E-08**	6.4E-09	6.4E-08	6.4E-09	--	*0.000034*	0.000014	0.000014	0.00028	0.00096 *U*	0.00096 *U*	0.00096 *U*	0.00096 *U*
Aroclor 1232	**6.4E-08**	6.4E-09	6.4E-08	6.4E-09	--	*0.000034*	0.000014	0.000014	0.00058	0.00096 *U*	0.00096 *U*	0.00096 *U*	0.00096 *U*
Aroclor 1242	**6.4E-08**	6.4E-09	6.4E-08	6.4E-09	--	*0.000034*	0.000014	0.000014	0.000053	0.00096 *U*	0.00096 *U*	0.00096 *U*	0.00096 *U*
Aroclor 1248	**6.4E-08**	6.4E-09	6.4E-08	6.4E-09	--	*0.000034*	0.000014	0.000014	0.000081	0.00096 *U*	0.00096 *U*	0.00096 *U*	0.00096 *U*
Aroclor 1254	**6.4E-08**	6.4E-09	6.4E-08	6.4E-09	--	*0.000034*	0.000014	0.000014	0.000033	0.00096 *U*	0.00096 *U*	0.00096 *U*	0.00096 *U*
Aroclor 1260	**6.4E-08**	6.4E-09	6.4E-08	6.4E-09	--	*0.000034*	0.000014	0.000014	0.094	0.00096 *U*	0.00096 *U*	0.00096 *U*	0.00096 *U*
Aroclors	**6.4E-08**	6.4E-09	6.4E-08	6.4E-09	0.0005	*0.000034*	0.000014	0.000014	0.00014	0.00096 *UT*	0.00096 *UT*	0.00096 *UT*	0.00096 *UT*
Conventionals													
Chloride	--	--	--	--	--	--	--	--	--	144	69.1	58.9	43.9
Perchlorate	--	--	--	--	--	*0.245*	--	--	--	*0.038*	*0.038*	0.0059	0.0029
Metals													
Chromium hexavalent	--	--	--	--	--	*0.11*	0.011	0.011	--	0.0233	0.0264	0.017	0.018
Chromium	--	--	--	--	*0.01*	--	--	--	--	--	--	--	--
Iron	--	--	--	--	--	--	--	--	--	4.86	4.91	3.84	1.67
Manganese	**0.1**	0.01	0.1	0.01	*0.05*	0.88	--	--	0.12	*0.0776*	*0.0821*	*0.0633*	0.0324
Mercury	--	--	**0.000146**	1.46E-05	*0.002*	0.011	0.00077	0.000012	0.0013	0.0002 *U*	0.0002 *U*	0.0002 *U*	0.0002 *U*
PAHs													
Acenaphthene	**0.99**	0.099	0.99	0.099	*0.0002*	0.37	--	0.52	--	0.0097 *U*	0.015 *U*	0.0096 *U*	0.0096 *U*
Acenaphthylene	--	--	--	--	*0.0002*	--	--	--	--	0.0097 *U*	0.015 *U*	0.0096 *U*	0.0096 *U*
Anthracene	**40**	4	40	4	*0.0002*	1.8	--	--	0.00073	0.0097 *U*	0.015 *U*	0.0096 *U*	0.0096 *U*
Benz(a)anthracene	**0.000018**	1.8E-06	0.000018	1.8E-06	0.0002	*0.000092*	--	--	0.000027	0.0097 *U*	0.015 *U*	0.0096 *U*	0.0096 *U*
Benzo(a)pyrene	**0.000018**	1.8E-06	0.000018	1.8E-06	0.0002	*9.2E-06*	--	--	0.000014	0.0097 *U*	0.015 *U*	0.0096 *U*	0.0096 *U*
Benzo(b)fluoranthene	**0.000018**	1.8E-06	0.000018	1.8E-06	0.0002	*0.000092*	--	--	--	0.0097 *U*	0.015 *U*	0.0096 *U*	0.0096 *U*
Benzo(g,h,i)perylene	--	--	--	--	*0.0002*	--	--	--	--	0.0097 *U*	0.015 *U*	0.0096 *U*	0.0096 *U*
Benzo(k)fluoranthene	**0.000018**	1.8E-06	0.000018	1.8E-06	*0.0002*	0.00092	--	--	--	0.0097 *U*	0.015 *U*	0.0096 *U*	0.0096 *U*
Chrysene	**0.000018**	1.8E-06	0.000018	1.8E-06	*0.0002*	0.0092	--	--	--	0.0097 *U*	0.015 *U*	0.0096 *U*	0.0096 *U*
Dibenz(a,h)anthracene	**0.000018**	1.8E-06	0.000018	1.8E-06	0.0002	*9.2E-06*	--	--	--	0.0097 *U*	0.015 *U*	0.0096 *U*	0.0096 *U*
Fluoranthene	**0.14**	0.014	0.14	0.014	*0.0002*	1.5	--	--	--	0.0097 *U*	0.015 *U*	0.0096 *U*	0.0096 *U*
Fluorene	**5.3**	0.53	5.3	0.53	*0.0002*	0.24	--	--	0.0039	0.0097 *U*	0.015 *U*	0.0096 *U*	0.0096 *U*
High Molecular Weight PAH	--	--	--	--	--	--	--	--	--	0.0097 *UT*	0.015 *UT*	0.0096 *UT*	0.0096 *UT*
Indeno(1,2,3-cd)pyrene	**0.000018**	1.8E-06	0.000018	1.8E-06	0.0002	*0.000092*	--	--	--	0.0097 *U*	0.015 *U*	0.0096 *U*	0.0096 *U*
Low Molecular Weight PAH	--	--	--	--	--	--	--	--	--	0.0097 *UT*	0.015 *UT*	0.0096 *UT*	0.0096 *UT*
Naphthalene	--	--	--	--	*0.0002*	0.0062	--	0.62	0.012	0.0097 *U*	0.015 *U*	0.0096 *U*	0.0096 *U*
Phenanthrene	--	--	--	--	*0.0002*	--	--	--	--	0.0097 *U*	0.015 *U*	0.0096 *U*	0.0096 *U*
Polycyclic Aromatic Hydrocarbons	--	--	--	--	--	--	--	--	--	0.0097 *UT*	0.015 *UT*	0.0096 *UT*	0.0096 *UT*
Pyrene	**4**	0.4	4	0.4	*0.0002*	0.18	--	--	--	0.0097 *U*	0.015 *U*	0.0096 *U*	0.0096 *U*
Pesticides													
4,4'-DDD	**3.1E-07**	3.1E-08	3.1E-07	3.1E-08	--	*0.00028*	--	--	0.000011	**0.0000096**	**0.000056**	**0.000041**	**0.000023**
4,4'-DDE	**2.2E-07**	2.2E-08	2.2E-07	2.2E-08	--	*0.0002*	--	--	--	**0.000029**	***0.00024***	**0.00011**	**0.000052**
4,4'-DDT	**2.2E-07**	2.2E-08	2.2E-07	2.2E-08	--	*0.0002*	0.000001	0.000001	0.000013	**0.000087**	***0.00068***	***0.0004***	**0.00016**
Total of 4,4'-DDD, -DDE, -DDT	--	--	--	--	--	*0.0002*	--	--	--	0.0001256 *T*	*0.000976 T*	*0.000551 T*	*0.000235 T*
Phenols													
Pentachlorophenol	**0.003**	0.0003	0.003	0.0003	0.001	*0.00056*	0.015	--	--	0.024 *U*	0.036 *U*	0.024 *U*	0.024 *U*
VOCs													
Chlorobenzene	**1.6**	0.16	1.6	0.16	*0.1*	0.11	--	0.05	0.064	0.005 *U*	0.005 *U*	0.005 *U*	0.005 *U*

Notes:

The perchlorate SLV of 3.6 ppb in the JSCS was replaced with EPA's DWEL of 24.5 ppb

Bold Fonts indicates the Human Health Fish Consumption screening level value used for screening (JSCS Screening Leve

Italic Fonts indicates the Human Health Drinking Water screening level value used for screening (JSCS Screening Levels f

Underline Font indicates the Ecological Receptor screening level value used for screening (JSCS Screening Levles for Water)

indicates an exceedance of more than one screening level value.

APPENDIX B

Quality Assurance Project Plan

SECTION A: PROJECT MANAGEMENT

A1 TITLE AND APPROVAL SHEET

ARKEMA, INC
STORMWATER INTERIM REMEDIAL MEASURES WORKPLAN

Quality Assurance Project Plan Approvals

DEQ Project Coordinator:	Matt McClincy	_____	Date: _____
Arkema Project Manager:	Larry Patterson	_____	Date: _____
Integral Project Manager:	David Livermore	_____	Date: _____
Integral Task Mananger:	Mike Martin	_____	Date: _____
Integral Project QA Manager:	Laura Jones	_____	Date: _____
CAS Project Manager:	Abbie Spielman	_____	Date: _____
CAS QA Manager:	Lee Wolf	_____	Date: _____

A2 TABLE OF CONTENTS

SECTION A: PROJECT MANAGEMENT A-1
A1 TITLE AND APPROVAL SHEET A-1
A2 TABLE OF CONTENTS A-2
A3 DISTRIBUTION LIST A-6
A4 INTRODUCTION AND PROJECT AND TASK ORGANIZATION A-7
A5 TASK DESCRIPTION A-8
A6 QUALITY OBJECTIVES AND CRITERIA FOR MEASUREMENT DATA A-9
A6.1 Data Quality Indicators A-9
A8 DOCUMENTS AND RECORDS A-12
A8.1 Field Documentation A-12
A8.2 Laboratory Documentation A-12
A8.3 Data Quality Documentation A-13

SECTION B: DATA GENERATION AND ACQUISITION B-1
B1 SAMPLING PROCESS DESIGN B-1
B1.1 Stormwater Sampling B-1
B1.2 Catch Basin Sediment Sampling B-1
B1.3 Optional Sampling B-2
B2 SAMPLING METHODS B-2
B3 SAMPLE HANDLING AND CUSTODY B-3
B4 ANALYTICAL METHODS B-3
B4.1 Chemical Analyses B-3
B5 QUALITY CONTROL B-4
B5.1 Field Quality Control Samples B-5
B5.2 Laboratory Quality Control B-5
B6 INSTRUMENT/EQUIPMENT TESTING, INSPECTION, AND MAINTENANCE B-5
B7 INSTRUMENT/EQUIPMENT CALIBRATION AND FREQUENCY B-6
B8 INSPECTION/ACCEPTANCE OF SUPPLIES AND CONSUMABLES B-6
B9 DATA MANAGEMENT B-7
B9.1 Field Data B-7
B9.2 Laboratory Data B-7

SECTION C: ASSESSMENT AND OVERSIGHT C-1
C1 ASSESSMENTS AND RESPONSE ACTIONS C-1
C2 REPORTS TO MANAGEMENT C-2

SECTION D: DATA VALIDATION AND USABILITY D-1
D1 CRITERIA FOR DATA REVIEW, VERIFICATION, AND VALIDATION D-1
D2 VERIFICATION AND VALIDATION METHODS D-1
D3 RECONCILIATION WITH USER REQUIREMENTS D-2

SECTION E: REFERENCES E-1

ATTACHMENT 1: Columbia Analytical Services Quality Assurance Manual
(Electronic Files - Compact Disk)

LIST OF TABLES

Table A4-1. Project Team Contact Information
Table A5-1. Summary of Samples and Chemical Analyses
Table A5-2. Laboratory Methods
Table A6-1. Measurement Quality Objectives
Table A6-2. Analytes and Method Reporting Limits for Stormwater Samples
Table A6-3. Analytes and Method Reporting Limits for Catch Basin Sediment Samples
Table B2-1. Sample Containers and Preservation Requirements

LIST OF FIGURES

Figure 4-1. Project Organizational Chart

ACRONYMS AND ABBREVIATIONS

BMPs	Best Management Practices
CAS	Columbia Analytical Services
COC	chain-of-custody
COIs	chemicals of interest
DDD	dichlorodiphenyldichloroethane
DDE	dichlorodiphenyldichloroethylene
DDT	dichlorodiphenyltrichloroethane
DEQ	Department of Environmental Quality
DI	deionized
DQOs	data quality objectives
EDD	electronic data deliverable
EPA	U.S. Environmental Protection Agency
EQuIS™	Environmental Quality Information System
FCR	field correction record
GC/ECD	gas chromatography/electron capture detection
GFAAS	graphite furnace atomic absorption spectrometry
GPC	gel permeation chromatography
HASP	Health and Safety Plan
ICP-AES	inductively coupled plasma - atomic emission spectrometry
JSCS	Joint Source Control Strategy
LIMS	Laboratory Information Management System
MDL	method detection limits
MQOs	measurement quality objectives
MRL	method reporting limit
NIST	National Institute of Standards and Technology
PARCC	precision, accuracy, representativeness, completeness, comparability
QAPP	Quality Assurance Project Plan
QA/QC	quality assurance/quality control
RPD	relative percent difference
SCR	Stormwater Characterization Report
SLVs	screening level values
SOPs	standard operating procedures
TSS	total suspended solids

A3 DISTRIBUTION LIST

DEQ Project Coordinator:	Matt McClincy
Arkema Project Manager:	Larry Patterson
Integral Project Manager:	David Livermore
Integral Stormwater Task Manager	Mike Martin
Integral Project QA Manager:	Laura Jones
Integral Field Coordinator:	Eron Dodak
Integral Data Manager:	Maya Desseva
CAS Laboratory Project Manager:	Abbie Spielman
CAS QA Manager:	Lee Wolf

A4 INTRODUCTION AND PROJECT AND TASK ORGANIZATION

This quality assurance project plan (QAPP) describes quality assurance/quality control (QA/QC) procedures that will be used for stormwater and catch basin sediment activities, as well as optional particle size analyses and surface soil sampling, to evaluate potential stormwater treatment alternatives at the Arkema, Inc. (Arkema), Portland, Oregon Facility (Plant Site). This QAPP has been prepared in accordance with U.S. Environmental Protection Agency (EPA) guidance for the preparation of QAPPs (USEPA 2002a).

The Plant Site was issued a new National Pollutant Discharge Elimination System stormwater discharge permit by the Oregon Department of Environmental Quality (DEQ) on January 22, 2004. The permit was issued for the discharge of storm runoff water from the Plant Site. Storm runoff water has the ability to erode any dirt or soil that is exposed to it, thus entraining particulates (suspended solids) within the stormwater flows. If these particulates contain chemicals of interest (COIs), the COIs will become entrained within the stormwater flow. Furthermore, cracked or structurally defective storm sewer pipes can act as a point of entry and conduit for subsurface COIs to the sewer discharge point. Thus, as a condition of the permit, Arkema was required to conduct a stormwater characterization for legacy and 303(d) constituents for a 1-year period. On May 18, 2005, Arkema submitted a stormwater characterization report (SCR) to DEQ in compliance with its permit (Arkema 2005).

Analytical results from the SCR were screened against screening level values (SLVs) set forth by DEQ and the EPA in the Portland Harbor Joint Source Control Strategy Document (JSCS; DEQ and USEPA 2005). Based on this screening, COIs that have been detected in stormwater at the Plant Site include:

- Perchlorate;
- Manganese;
- Hexavalent chromium;
- 4,4'-DDE;
- 4,4'-DDD, and
- 4,4'-DDT.

The field effort will include collection of stormwater from four outfalls located within the Plant Site, sediment from all catch basins and approximately 20 percent of catch basin filter socks located within the Plant Site, and optional stormwater particle size (total suspended solids; TSS) analysis and surface soil sampling. Additional information is provided in the Stormwater Interim Remedial Measure Workplan (the Workplan) (Integral 2006) which accompanies this document.

Integral Consulting, Inc. (Integral) is conducting this work under contract with Arkema, with direction from DEQ. The organizational structure for this project is illustrated in Figure A4-1. Contact information is provided in Table A4-1.

A5 TASK DESCRIPTION

The tasks to be completed for this project include fieldwork, laboratory analyses, data quality evaluation, data management, data analysis, and report preparation. Tasks that will be completed in the field, including related documentation and QA/QC activities, are described in detail in the Workplan (Integral 2006). The following activities are addressed in the Workplan:

- Sampling locations;
- Sampling equipment and methods;
- Sample identification;
- Sample processing methods;
- Documentation of sample information and field activities;
- Sample handling and shipping procedures;
- Chain-of-custody (COC) procedures;
- Decontamination procedures; and
- Handling and disposal of investigation-derived wastes.

Integral will collect stormwater and catch basin sediment samples, along with optional stormwater TSS and surface sediment samples, and will prepare the samples for delivery to the laboratory, a list of samples and analyses is provided in Table A5-1. Sample locations are provided in Figure 1 of the Workplan.

Columbia Analytical Services (CAS) of Kelso, Washington, will perform all chemical and physical analyses associated with the stormwater, catch basin sediments, and optional stormwater TSS and surface soil samples.

Table A5-2 details analyses to be performed by the laboratory. Analyses will be completed using EPA methods (USEPA 2006), as indicated in Table A5-2. Full laboratory data reports will be provided in hard copy and electronic data deliverables (EDDs) will be provided in spreadsheet format as required for importing into the database. The Environmental Quality Information System (EQuIS™) database application will be used to manage the field and laboratory data.

Data verification will be completed by Integral for data generated in the field and by the laboratory for data generated during sample preparation and/or analysis. The

completeness of the final database will be verified by Integral. Data validation and data quality assessment will be completed by EcoChem of Seattle, Washington. EcoChem will also verify the accuracy of the laboratory EDDs.

A6 QUALITY OBJECTIVES AND CRITERIA FOR MEASUREMENT DATA

Data quality indicators such as the PARCC parameters (i.e., precision, accuracy or bias, representativeness, completeness, comparability) (USEPA 2002a) and analytical sensitivity will be used to assess conformance of data with quality control criteria. Data quality objectives (DQOs) and quality control criteria are described in this section.

A6.1 Data Quality Indicators

The overall DQO for this project is to develop and implement procedures that will ensure the collection of representative data of known and acceptable quality. The QA procedures and measurements that will be used for this project are based on EPA guidance (USEPA 2006). PARCC parameters are commonly used to assess the quality of environmental data. Measurement quality objectives (MQOs) for the quantitative PARCC parameters, bias, precision, and completeness, are provided in Table A6-1.

Bias represents the degree to which a measured concentration conforms to the reference value. The results for matrix spikes, laboratory control samples, field blanks, and method blanks will be reviewed to evaluate bias of the data. The following calculation is used to determine percent recovery for a matrix spike sample:

$$\%R = \frac{M - U}{C} \times 100$$

%R = percent recovery
M = measured concentration in the spiked sample
U = measured concentration in the unspiked sample
C = concentration of the added spike

The following calculation is used to determine percent recovery for a laboratory control sample or reference material:

$$\%R = \frac{M}{C} \times 100$$

%R = percent recovery
M = measured concentration in the reference material
C = established reference concentration

Results for field and method blanks can reflect systematic bias that results from contamination of samples during collection or analysis. Any analytes detected in field or method blanks will be evaluated as potential indicators of bias.

Precision reflects the reproducibility between individual measurements of the same property. Precision will be evaluated using the results of matrix spike duplicates, laboratory duplicates, field splits, and field replicates. Precision is expressed in terms of the relative standard deviation for three or more measurements and the relative percent difference (RPD) for two measurements. The following equation is used to calculate the RPD between measurements:

$$RPD = \frac{|C_1 - C_2|}{(C_1 + C_2)/2} \times 100$$

C_1 = first measurement
C_2 = second measurement
RPD = relative percent difference

The relative standard deviation is the ratio of the standard deviation of three or more measurements to the average of the measurements, expressed as a percentage.

Completeness will be calculated as the ratio of usable data (i.e., unqualified data and J-qualified data) to requested data, expressed as a percentage.

Additional laboratory QC procedures will be evaluated to provide supplementary information regarding overall quality of the data, performance of instruments and measurement systems, and sample-specific matrix effects.

QC samples and procedures are specified in each method protocol (Table A5-2). All QC requirements will be completed by the laboratories as described in the protocols, including the following (as applicable to each analysis):

- Instrument tuning;
- Initial calibration;
- Initial calibration verification;
- Continuing calibration;
- Calibration or instrument blanks;
- Method blanks;
- Laboratory control samples;

- Internal standards;
- Surrogate spikes;
- Serial dilutions;
- Matrix spikes; and
- Matrix spike duplicates or laboratory duplicates.

To alert the data user to possible bias or imprecision, data qualifiers will be applied to reported analyte concentrations when associated QC samples or procedures do not meet control limits. Laboratory control limits for the methods that will be used for this investigation are provided in Attachment 1. Data validation criteria and procedures are described in Sections D1 and D2 of this QAPP.

Method reporting limits (MRLs) reflect the sensitivity of the analysis. Target MRLs for stormwater and catch basin sediments are summarized in Tables A6-2 and A6-3, respectively.

Method detection limits (MDLs) have been determined by CAS for each analyte, as required by USEPA (2006). MDLs are statistically derived and reflect the concentration at which an analyte can be detected in a clean matrix with 99 percent confidence that a false positive result has not been reported. CAS has established MRLs at levels above the MDLs for the project analytes. These values are based on the laboratories' experience analyzing environmental samples and reflect the typical sensitivity obtained by the analytical system. The concentration of the lowest standard in the initial calibration curve for each analysis is at the level of the MRL. This allows reliable quantification of concentrations to the MRL. Analyte concentrations for this site investigation will be reported to the MDL. Analytes detected at concentrations between the MRL and the MDL will be reported with a J qualifier to indicate that the value is an estimate (i.e., the analyte concentration is below the calibration range). Non-detects will be reported at the MRL. The MRL will be adjusted by the laboratory as necessary to reflect sample dilution or matrix interference.

Representativeness and comparability are qualitative QA/QC parameters. Representativeness is the degree to which data represent a characteristic of an environmental condition. In the field, representativeness will be addressed primarily in the sampling design, by the selection of sampling sites and sample collection procedures. In the laboratory, representativeness will be ensured by the proper handling and storage of samples and initiation of analysis within holding times.

Comparability is the qualitative similarity of one data set to another (i.e., the extent to which different data sets can be combined for use). Comparability will be addressed through the use of field and laboratory methods that are consistent with methods and procedures recommended by EPA that are commonly used for environmental studies.

A8 DOCUMENTS AND RECORDS

Records will be maintained documenting all activities and data related to field sampling and chemical analyses at the laboratory. Results of data verification and validation activities will also be documented. Procedures for documentation of these activities are described in this section. The components of field documentation are discussed in Appendix A of the Workplan.

The Workplan, QAPP, and the health and safety plan (HASP), will be provided to every project participant listed in Section A3. Any revisions or amendments to any of the documents that comprise the Workplan will also be provided to these individuals.

A8.1 Field Documentation

The Integral project manager will ensure that the field team receives the final approved version of the Workplan (including the HASP and this QAPP) prior to the initiation of field activities. Field records that will be maintained include:

- Field log books;
- Photo documentation;
- Field data and sample collection information forms;
- Field change request forms (as needed); and
- Sample tracking/chain of custody forms.

The content and use of these documents are described in Appendix A of the Workplan.

A8.2 Laboratory Documentation

All activities and results related to sample analyses will be documented at the laboratory. Internal laboratory documentation procedures are described in CAS' QA manual (Attachment 1).

CAS will provide a data package for each sample delivery group or analysis batch that is comparable in content to a full Contract Laboratory Program package. It will contain all information required for a complete QA review, including the following:

- A cover letter discussing analytical procedures and any difficulties that were encountered;
- A case narrative referencing or describing the procedures used and discussing any analytical problems and deviations from standard operating procedures (SOPs) and this QAPP;
- Chain-of-custody and cooler receipt forms;

- A summary of analyte concentrations (to two significant figures, unless otherwise justified), method reporting limits, and method detection limits;
- Laboratory data qualifier codes appended to analyte concentrations, as appropriate, and a summary of code definitions;
- Sample preparation, extraction, dilution, and cleanup logs;
- Instrument tuning data;
- Initial and continuing calibration data, including instrument printouts and quantification summaries, for all analytes;
- Results for method and calibration blanks;
- Results for all QA/QC checks, including surrogate spikes, internal standards, laboratory control samples, matrix spike samples, matrix spike duplicate samples, and laboratory duplicate or triplicate samples;
- Original data quantification reports for all analyses and samples;
- All laboratory worksheets and standards preparation logs.

Data will be delivered in both hard-copy and electronic format to the Integral laboratory coordinator, who will be responsible for oversight of data verification and validation and for archiving the final data and data quality reports in the project file. Electronic data deliverables will be compatible with Integral's EQuIS™ database.

A8.3 Data Quality Documentation

Data verification and validation will be conducted in accordance with *Guidance on Environmental Data Verification and Validation* (USEPA 2002b). The organic, inorganic, and conventional data will be validated according to methods described in U.S. EPA's functional guidelines for organic and inorganic data review (USEPA 1999, 2002c). Data validation will include review of the laboratory case narratives, the results for the field and laboratory quality control results, assessment of completeness, a tabulated summary of the qualifiers applied to the data, and an overall assessment of data quality. Data validation will be subcontracted to EcoChem of Seattle, Washington. Data validation reports will be prepared by EcoChem and provided to the Integral quality assurance coordinator.

The quality assurance reports will be summarized in the data summary report, which will be provided to DEQ. Any limitations to the usability of the data will also be discussed in this report.

All database entries provided by the laboratories will be verified against the validated hard-copy data in the data package. All changes to the database will be recorded in the database change log. Any data tables prepared from the database for data users will

include all data validation qualifiers that were applied by the laboratories and during data validation.

SECTION B: DATA GENERATION AND ACQUISITION

B1 SAMPLING PROCESS DESIGN

Section 1.2 of the Workplan details the phased approach to address COIs in stormwater at the Plant Site. Stormwater samples will be collected to help assess whether demolition activities were a major source of COI mass to stormwater and establish post-demolition levels, and to assess the effectiveness of Best Management Practices (BMPs). Catch basin sediments will be collected to help assess where surface contamination may be entering the storm sewer system and whether COIs are attributable to surface or non-surface sources.

B1.1 Stormwater Sampling

Three rounds of stormwater samples will be collected at four different outfalls located within the Plant Site (Figure 1 of the Workplan). Stormwater samples will be collected by methods detailed in Section 2.3 of the Workplan. Samples collected from each outfall will be analyzed for the following constituents:

- Total suspended solids (TSS);
- Dissolved perchlorate;
- Total/dissolved manganese;
- Dissolved hexavalent chromium; and
- Total/dissolved 4,4'-DDE, -DDD, and –DDT.

B1.2 Catch Basin Sediment Sampling

Sediment samples will be collected from 20 catch basins within the Plant Site (Figure 1 of the Workplan). In addition, sediment will be collected from the filter socks of approximately 20 percent of the catch basins at the Plant Site. These sediments will be analyzed for the following constituents:

- Total solids;
- Perchlorate;
- Manganese;
- Hexavalent chromium; and
- 4,4'-DDE, -DDD, and –DDT.

B1.3 Optional Sampling

Additional sampling may be conducted based on the preliminary results of the stormwater sampling and the catch basin sediment sampling. This additional sampling may include particle size analysis of TSS contained in stormwater and/or surface soil sampling.

B1.3.1 Particle Size Analysis

A particle size analysis will be conducted on stormwater samples collected during the May 2006 outfall water sampling event if it appears that enhancing BMPs will not adequately address COIs in stormwater and if COIs are determined (based on the analytical results) to be associated with stormwater solids.

B1.3.2 Surface Soil Sampling

Surface soil sampling may be conducted pending the results of the catch basin sampling. Sampling locations would focus on currently un- or under-delineated areas as described in the Uplands RI, (ERM 2005) that may have a high potential for contributing COIs to stormwater as indicated by the catch basin sampling results.

B2 SAMPLING METHODS

Field sampling methods for stormwater and catch basin sediment collection are described in their respective sections of the Workplan. Standard operating procedures (SOPs) for each sampling method are provided in Appendix A of the Workplan.

Requirements for sample containers, sample preservation, storage temperature, and holding times are summarized in Table B2-1. All sample containers will have screw-type lids to ensure adequate sealing of the bottles. Lids of the glass containers will have Teflon inserts to prevent sample reaction with the plastic lid and to improve the quality of the seal. When required, preservative will be added to containers at the laboratory prior to shipment to the sampling site.

Commercially available, pre-cleaned jars will be used, and the laboratory will maintain a record of certification from the suppliers. The bottle shipment documentation will record batch numbers for the bottles. With this documentation, bottles can be traced to the supplier, and bottle rinse blank results can be reviewed. The bottle documentation from the laboratory will be included in the Integral project file.

B3 SAMPLE HANDLING AND CUSTODY

The principal documents used to identify samples and to document possession will be field logbooks and chain-of-custody (COC) records. Custody will be documented for all samples at all stages of the analytical or transfer process. Sample handling and COC procedures prior to delivery to the laboratories are outlined in SOP-6 and SOP-7, respectively (Appendix A of the Workplan).

Upon receipt of samples at each laboratory, the sample manager will check for physical integrity of the containers and seals and inventory the samples by comparing sample labels to those on the COC forms. The laboratory will include the COC and cooler receipt forms in the data package. Any breaks in the COC or non-conformances will be noted and reported in writing to the Integral laboratory coordinator within 24 hours of receipt of the samples. CAS' QA manual (Attachment 1) includes procedures used for accepting custody of samples and documenting samples at the laboratory. The laboratory project manager will ensure that a sample-tracking record is maintained that follows each sample through all stages of sample processing at the laboratory.

The laboratory will maintain COC documentation and documentation of proper storage conditions for the entire time that the samples are in its possession. The laboratory will store the excess samples for a minimum of 6 months following completion of data validation.

The laboratory will not dispose of the samples for this project until authorized to do so by the Integral laboratory coordinator. The laboratory will dispose of samples, as appropriate, based on matrix, analytical results, and information received from the client. If determined to be hazardous, remaining samples will enter the appropriate laboratory waste streams.

B4 ANALYTICAL METHODS

The laboratory methods that will be used to complete the stormwater and catch basin sediment testing are described below.

B4.1 Chemical Analyses

Stormwater samples will be analyzed for TSS, dissolved perchlorate, total and dissolved manganese, dissolved hexavalent chromium, and total and dissolved 4,4'-DDT, -DDE, and –DDD. Catch basin sediment samples will be analyzed for total solids, perchlorate, manganese, hexavalent chromium, and 4,4'-DDT, -DDE, and –DDD. Columbia Analytical Services (CAS; Kelso, WA) will complete all chemical analyses. Laboratory methods for sample preparation and analysis are summarized in Table A5-2 and described in the following sections. Sample containers, preservation, and holding times are provided in Table B2-1.

B4.1.1 Conventional Analyses

Total suspended solids (TSS) in stormwater samples will be analyzed gravimetrically according to EPA SW846 Method 160.2. Total solids in catch basin sediments will be determined according to PSEP (1986).

B4.1.2 Inorganic Analyses

Stormwater and catch basin sediments will be analyzed for perchlorate according to EPA Method 314.0. Stormwater samples will be filtered at the laboratory and catch basin sediments will undergo a deionized (DI) water leach extraction, as specified in the method, and analyzed by ion chromatography.

Analysis for hexavalent chromium in stormwater samples will be completed by coprecipitation of the hexavalent chromium as lead chromate with lead sulfate in a solution of acetic acid. The chromium-containing precipitate will be washed to remove trivalent chromium in solution. The precipitate will be redissolved and analyzed by graphite furnace atomic absorption spectrometry (GFAAS) according to EPA Method 7191. Catch basin sediment samples will undergo an alkaline digestion extraction and the extracts will be analyzed by colorimetry according to EPA Method 7196A.

B4.1.3 Metals

Stormwater and catch basin sediment samples will be analyzed for manganese according to EPA SW846 Method 6010B using inductively-coupled plasma – atomic emission spectrometry (ICP-AES).

B4.1.4 Organochlorine Pesticides

Stormwater and catch basin sediment samples will be analyzed for 4,4′-DDT, 4,4′-DDE, and 4,4′-DDD using EPA SW846 Method 8081A. Samples will be extracted using sonication. Gel permeation chromatography (GPC) will be used to remove large organic interferents, and sulfur cleanup will be completed if necessary using tetrabutylammonium sulfite. Samples will be analyzed by gas chromatography with an electron capture detector (GC/ECD).

B5 QUALITY CONTROL

Quality control samples will be prepared in the field and at the laboratories to monitor the bias and precision of the sample collection and analysis procedures.

B5.1 Field Quality Control Samples

QA/QC samples will be collected once per sampling method (e.g., stormwater and catch basin sediment). QA/QC samples to be collected consist of:

- One field duplicate;
- One filtered equipment blank;
- One unfiltered equipment blank; and
- One DI water blank.

QA/QC samples will be prepared in accordance with the Standard Operating Procedure for Quality Control Sample Preparation (SOP-10, Appendix A). Validation criteria and procedures for field QC samples are described in Sections D1 and D2 of this QAPP.

B5.2 Laboratory Quality Control

Extensive and detailed requirements for laboratory QC procedures are provided in the EPA protocols that will be used for this study (Table A5-2). Every method protocol includes descriptions of QC procedures, and many incorporate additional QC requirements by reference to separate QC chapters. QC requirements include control limits and requirements for corrective action in many cases. QC procedures will be completed by the laboratories, as required in each protocol and as indicated in this QAPP.

For chemical analysis, the frequency of analysis for laboratory control samples, matrix spike samples, matrix spike duplicates or laboratory duplicates, and method blanks will be one for every 20 samples or one per extraction batch, whichever is more frequent. Surrogate spikes and internal standards will be added to every field sample and QC sample, as required. Calibration procedures will be completed at the frequency specified in each method description. As required for EPA SW846 methods, performance-based control limits have been established by the laboratories. These and all other control limits specified in the method descriptions will be used by the laboratory to establish the acceptability of the data or the need for reanalysis of the samples. Laboratory control limits for recoveries of surrogate compounds, matrix spikes, and laboratory control samples, and for relative percent difference of matrix spike duplicates and laboratory duplicates, are provided in Attachment 1 of this QAPP.

B6 INSTRUMENT/EQUIPMENT TESTING, INSPECTION, AND MAINTENANCE

Analytical instrument testing, inspection, maintenance, setup, and calibration will be conducted by the laboratory in accordance with the requirements identified in the laboratories' SOPs and manufacturer instructions. In addition, each of the specified

analytical methods provides protocols for proper instrument setup and tuning, and critical operating parameters. Instrument maintenance and repair will be documented in maintenance log or record books.

B7 INSTRUMENT/EQUIPMENT CALIBRATION AND FREQUENCY

Laboratory instruments will be properly calibrated, and the calibration will be verified with appropriate check standards and calibration blanks for each parameter before beginning each analysis. Instrument calibration procedures and schedules will conform to analytical protocol requirements and descriptions provided in CAS' QA manual (Attachment 1).

All calibration standards will be obtained from either the EPA repository or a commercial vendor, and the laboratories will maintain traceability back to the National Institute of Standards and Technology (NIST). Stock standards will be used to make intermediate standards and calibration standards. Special attention will be given to expiration dating, proper labeling, proper refrigeration, and prevention of contamination. Documentation relating to the receipt, mixing, and use of standards will be recorded in a laboratory logbook. All calibration and spiking standards will be checked against standards from another source.

B8 INSPECTION/ACCEPTANCE OF SUPPLIES AND CONSUMABLES

The quality of supplies and consumables used during sample collection and laboratory analysis can affect the quality of the project data. All equipment that comes into contact with the samples and extracts must be sufficiently clean to prevent detectable contamination, and the analyte concentrations must be accurate in all standards used for calibration and quality control purposes.

During sample collection, solvents of appropriate, documented purity will be used for decontamination. Solvent containers will be dated and initialed when they are opened. The quality of laboratory water used for decontamination will be documented at the laboratories. Cleaned and documented sample containers will be provided by the laboratories. All containers will be visually inspected prior to use, and any suspect containers will be discarded.

Reagents of appropriate purity and suitably cleaned laboratory equipment will also be used for all stages of laboratory analyses. Details for acceptance requirements for supplies and consumables at the laboratories are provided in the laboratory SOPs and QA plans. All supplies will be obtained from reputable suppliers with appropriate documentation or certification. Supplies will be inspected to confirm that they meet use requirements, and certification records will be retained by Integral (i.e., for supplies used in the field) or the laboratory.

B9 DATA MANAGEMENT

Data for this project will be generated in the field and at the laboratory. The final repository for sample information for the sample collection efforts will be an EQuIS™ database. Procedures to be used to transfer data from the point of generation to the EQuIS™ database are described in this section. Final data will be combined with historical data, and summary tables will be created using EQuIS™.

B9.1 Field Data

Data that are generated during sample collection and preparation will be manually entered into the field logbook, sample collection forms, and COC forms. Data from these sources will be entered into the EQuIS™ database directly from the field logbook and sample collection forms. These data include station location coordinates, station names, sampling dates, sample identification codes, and additional station and sample information (e.g., sample type, field replicate number). All entries will be reviewed for accuracy and completeness by a second individual, and any errors will be corrected before the data are approved for released to data users.

B9.2 Laboratory Data

A variety of manually entered and electronic instrument data are generated at the laboratory. Data are manually entered into:

- Standard logbooks;
- Storage temperature logs;
- Balance calibration logs;
- Instrument logs;
- Sample preparation and analysis worksheets;
- Maintenance logs; and
- Individual laboratory notebooks.

All manual data entry into the Laboratory Information Management System (LIMS) is proofed at the laboratory. All data collected from each laboratory instrument, either manually or electronically, are reviewed and confirmed by analysts before reporting. Forms IV-X for validated data packages are generated in the laboratory and reviewed for correctness in interpretation, conformance with QA requirements, and completeness. Once the data have been accepted, the final results are released to the LIMS for reporting. The LIMS is used to generate the EDD as well as Forms I-III for the data package, providing a single source for reporting of chemical data. The EDD is further spot-checked against the hard copy to ensure that the correct data set is reported for both. A detailed description of procedures for laboratory data management and data review and verification are provided in CAS' QA manual (Attachment 1).

Laboratory data will be entered directly into the EQuIS™ database from the EDD. A database printout will be used to verify database entries against the hard-copy laboratory data packages.

SECTION C: ASSESSMENT AND OVERSIGHT

This project will rely heavily on the knowledge and experience of the project team. The field team and laboratories will stay in close verbal contact with the Integral project and task managers and QA manager during all phases of the project. This level of communication will serve to keep the management team informed of activities and events, and will allow for informal but continuous project oversight. Few scheduled assessment activities are planned for this project because the scope of the sampling and analysis effort and the size of the project team are relatively small.

C1 ASSESSMENTS AND RESPONSE ACTIONS

Assessment activities will include readiness reviews prior to sampling and prior to release of the final data to the data users, and internal review while work is in progress. An informal technical systems audit may be conducted if problems are encountered during any phase of this project.

Readiness reviews are conducted to ensure that all necessary preparations have been made for efficient and effective completion of each critical phase of project work. The first readiness review will be conducted prior to field sampling. The field coordinator will verify that all field equipment is ready for transfer to the site. The field coordinator will also verify that the field team and subcontractors have been scheduled and briefed and that the contracts for the subcontractors have been signed by both parties. Any deficiencies noted during this readiness review will be corrected prior to initiation of sampling activities.

The second readiness review will be completed before final data are released for use. The data manager will verify that all results have been received from the laboratory, data validation and data quality assessment have been completed for all of the data, and data qualifiers have been entered into the database and verified. Any deficiencies noted during this review will be corrected by the data manager, the Integral QA manager, or their designee. Data will not be released for final use until all data have been verified and validated. No report will be prepared in conjunction with the readiness reviews. However, the project manager and data users will be notified when the data are ready for use.

Technical review of intermediate and final work products generated for this project will be completed throughout the course of all sampling, laboratory, data validation, data management, and data interpretation activities to ensure that every phase of work is accurate and complete and follows the QA procedures outlined in this QAPP. Any problems that are encountered will be resolved between the reviewer and the person completing the work. Any problems that cannot be easily resolved or that affect the final quality of the work product will be brought to the attention of the Integral and

Arkema project managers. EPA will be notified of any problems that may affect the final outcome of the project.

The laboratory has implemented a review system that serves as a formal surveillance mechanism for all laboratory activities. Each phase of work is reviewed by a supervisor before it is approved for release. Details are provided in CAS' QA manual (Attachment 1).

Technical system audits may be conducted if serious problems are encountered during sampling or analysis operations. If completed, these audits will be conducted by the Integral QA manager or designee or by the laboratory QA managers. These audits may consist of onsite reviews of any phase of field or laboratory activities or data management. Results of any audits will be provided in the data summary report.

Any project team member who discovers or suspects a non-conformance is responsible for reporting the non-conformance to the project manager, the Integral QA manager, or the laboratory project or QA manager, as applicable. The project manager will ensure that no additional work dependent on the non-conforming activity is performed until a confirmed non-conformance is corrected.

C2 REPORTS TO MANAGEMENT

Corrective actions will be required if deviations from the methods or QA requirements established in the Workplan or this QAPP are encountered. When a non-conformance is identified, corrective action will be taken immediately, if possible. The project manager will be contacted and, if necessary, will provide assistance in resolving the issue. A formal corrective action plan is not likely to be required for a project of this limited scope. However, any non-conformance issue that ultimately affects the quality of the data or results in a change of scope in the work described in the Workplan, including this QAPP, will be documented in the field log or field correction record (FCR) to the project manager. This documentation will serve as a Corrective Action Report. A description of the non-conformance issue, the attempted resolution, and any effects on data quality or usability will be provided in the data summary report.

The laboratory has implemented routine systems of reporting non-conformance issues and their resolution. These procedures are described in CAS' QA manual (Attachment 1). Laboratory non-conformance issues will also be described in the data summary report if they affect the quality of the project data.

SECTION D: DATA VALIDATION AND USABILITY

Data generated in the field and at the laboratory will be verified and validated according to criteria and procedures described in this section. Data quality and usability will be evaluated, and a discussion will be included in the data summary report.

D1 CRITERIA FOR DATA REVIEW, VERIFICATION, AND VALIDATION

Field and laboratory data for this project will undergo a formal verification and validation process. All entries into the database will be verified. All errors found during the verification of field data, laboratory data, and the database will be corrected prior to release of the final data.

Data verification and validation for organic compounds and metals will be completed according to methods described in the functional guidelines for organic and inorganic data review (USEPA 1999, 2002c). Data will be qualified as estimated as necessary if results for laboratory control samples, matrix spike samples, and matrix spike or laboratory duplicates do not meet measurement quality objectives provided in Table A6-3 or if control limits for any other QC sample or procedure do not meet performance-based control limits. Performance-based control limits are established periodically by the laboratories. Current control limits for the laboratory are provided in Attachment 1 of this QAPP.

Results for field duplicates will be evaluated using the MQOs provided in Table A6-3. Data will not be qualified as estimated if the MQOs are exceeded, but RPD results will be tabulated, and any exceedances will be discussed in the data summary report. Equipment rinse blanks will be evaluated and data qualifiers will be applied in the same manner as method blanks, as described in the functional guidelines for data review (USEPA 1999, 2002c).

Data will be rejected if control limits for acceptance of data are not met, as described in USEPA (1999, 2002c).

D2 VERIFICATION AND VALIDATION METHODS

Field data will be verified during preparation of samples and COCs. Field data and COCs will be reviewed by the field coordinator after the field effort is complete. After field data are entered into the project database, 100 percent verification of the entries will be completed to ensure the accuracy and completeness of the database. Any discrepancies will be resolved before the final database is released for use.

Procedures for verification and validation of laboratory data and field QC samples will be completed as described in the functional guidelines and SOP for data validation

(USEPA 1999, 2002b, 2002c) and summarized in Section D1, above. The accuracy and completeness of the database will be verified at the laboratory when the EDDs are prepared and again as part of data validation. All entries to the database from the laboratory EDDs will be checked against the hard-copy data packages. Data validation will be completed by EcoChem.

In addition to verification of field and laboratory data and information, data qualifier entries into the database will be verified. Any discrepancies will be resolved before the final database is released for use.

Method reporting limit goals for this project are provided in Tables A6-1 and A6-2. Reporting limits for non-detects will be compared to the method reporting limit goals to evaluate method sensitivity for each sample. Any exceedance of actual MRLs over the target MRLs will be discussed in the data summary report.

D3 RECONCILIATION WITH USER REQUIREMENTS

The goal of data validation is to determine the quality of each data point and to identify data points that do not meet the project MQOs. Nonconforming data may be qualified as estimated or rejected as unusable during data validation if criteria for data quality are not met. Rejected data will not be used for any purpose. An explanation of the rejected data will be included in the data summary report.

Data qualified as estimated will be used to evaluate the site and will be appropriately qualified in the final project database. These data are less precise or less accurate than unqualified data. The data users, in cooperation with the Integral project manager and QA manager, are responsible for assessing the effect of the inaccuracy or imprecision of the qualified data on statistical procedures and other data uses for this study. The data quality discussion in the data summary report will include all available information regarding the direction or magnitude of bias or the degree of imprecision for qualified data to facilitate the assessment of data usability. The data summary report will also include a discussion of data limitations, and their effect on data interpretation activities.

SECTION E: REFERENCES

Arkema. 2005. Stormwater Characterization Report, Portland Plant. Arkema, Inc., 6400 NW Front Avenue, Portland, OR.

DEQ and USEPA. 2005. Portland Harbor Join Source Control Strategy, Final, December 2005. Oregon Department of Environmental Quality and U.S. Environmental Protection Agency. http://www.deq.state.or.us/nwr/PortlandHarbor/jscs.htm.

ERM. 2005. Upland Remedial Investigation Report Lots 3 & 4 and Tract A – Revision 1. Prepared for Arkema, Inc., 6400 NW Front Avenue, Portland, OR. Environmental Resources Management, 6650 SW Redwood Lane, Suite 300, Portland, OR.

Integral. 2006. Stormwater Interim Remedial Measure Workplan. Prepared for Arkema, Inc., Portland, OR. Integral Consulting, Inc., Broomfield, CO.

PSEP. 1986. Puget Sound Estuary Program: Recommended Protocols for Measuring Conventional Sediment Variables in Puget Sound. Final Report. Prepared for U.S. EPA, Region 10, Office of Puget Sound, Seattle, WA and the U.S. Army Corps of Engineers, Seattle District, Seattle, WA. Tetra Tech, Inc., Bellevue, WA.

USEPA. 1999. USEPA Contract Laboratory Program National Functional Guidelines for Organic Data Review. EPA-540/R-99-008. U.S. Environmental Protection Agency, Office of Emergency and Remedial Response, Washington, D.C.

USEPA. 2002a. Guidance for Quality Assurance Project Plans. EPA QA/G-5. EPA/240/R-02/009. U.S. Environmental Protection Agency, Office of Environmental Information, Washington, D.C.

USEPA. 2002b. Guidance on Environmental Data Verification and Validation. EPA AQ/G-8. U.S. Environmental Protection Agency, Office of Environmental Information, Washington, D.C.

USEPA. 2002c. USEPA Contract Laboratory Program National Functional Guidelines for Inorganic Data Review. 540-R-01-008. U.S. Environmental Protection Agency, Office of Emergency and Remedial Response, Washington, D.C.

USEPA. 2006. SW-846 On-line, Test Methods for Evaluating Solid Waste – Physical/Chemical Methods. U.S. Environmental Protection Agency. http://www.epa.gov/epaoswer/hazwaste/test/main.htm. (Accessed March 10, 2006).

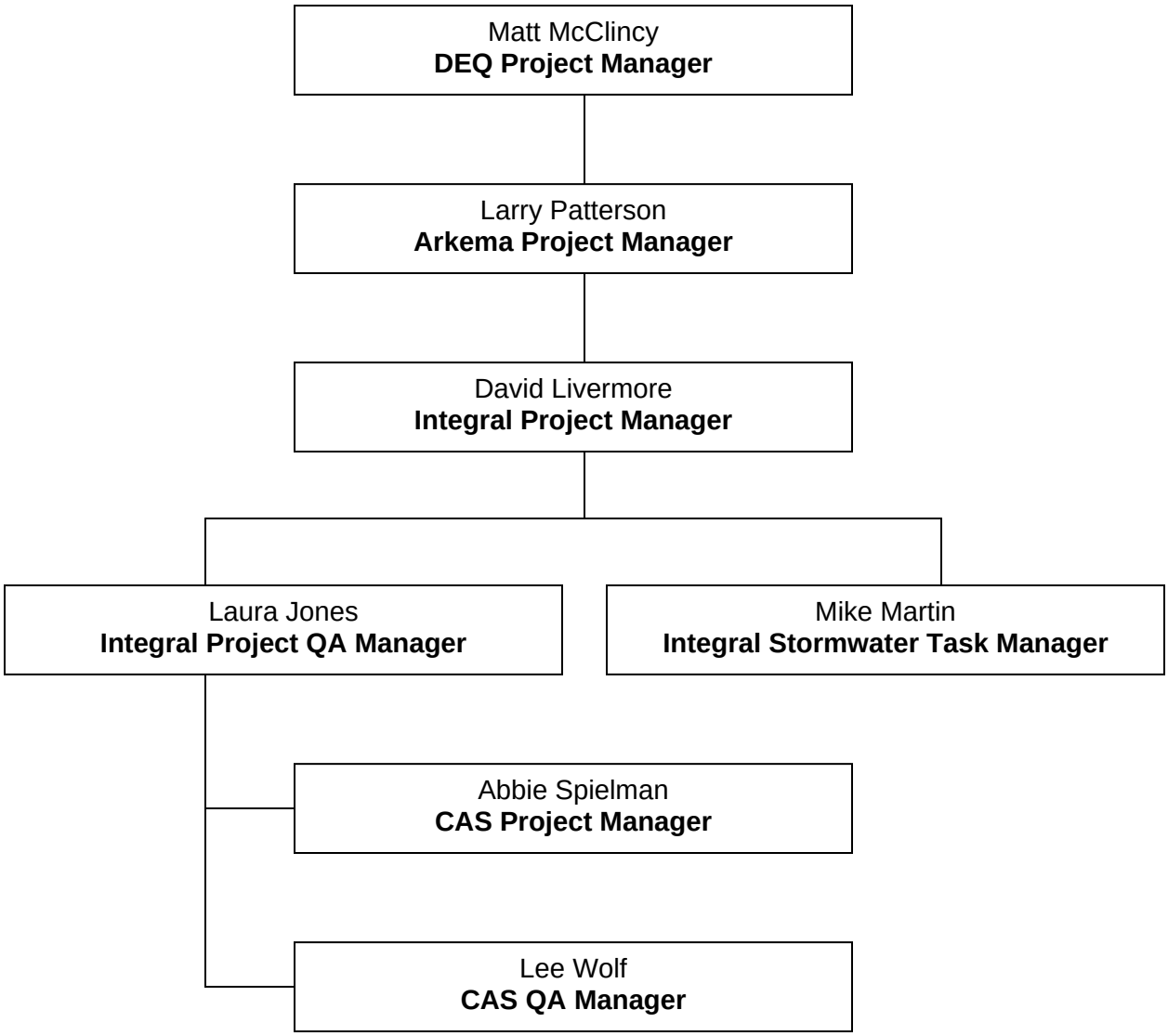

Figure A4-1. Project Organization

Table A4-1. Project Team Contact Information.

Name	Project Role	Phone	Fax	Email
Arkema				
Larry Patterson	Project Manager	503-225-7210	503-225-7279	larry.patterson@arkemagroup.com
Oregon Department of Environmental Quality				
Matt McClincy	Project Manager	503-229-5538	503-229-6969	mcclincy.matt@deq.state.or.us
Integral Consulting				
David Livermore	Project Manager	503-248-5545 x13	503-248-5755	dlivermore@integral-corp.com
Mike Martin	Stormwater Task Manager	303-404-2994 x23	303-404-2995	mmartin@integral-corp.com
Laura Jones	Project QA Coordinator	503-248-5545 x11	503.248.5755	ljones@integral-corp.com
Eron Dodak	Health & Safety Officer & Field Operations Manager	503-248-5545 x14	503-248-5755	edodak@integral-corp.com
Reid Carscadden	Senior Technical Advisor	206-230-9900 x29	206-230-9901	rcarscadden@integral-corp.com
Columbia Analytical Services				
Abbie Spielman	Laboratory Project Manager	360-577-7222	360-636-1068	aspielman@clso.caslab.com
Lee Wolf	Laboratory QA Manager	360-577-7222	360-636-1068	lwolf@clso.caslab.com

Table A5-1. Summary of Samples and Chemical Analyses

Analysis	Number of Samples				
	Field Samples[1]	Field Duplicates	Equipment Rinse Blanks	DI Water Blank	Total
Stormwater					
Total suspended solids (TSS)	12	3	3	3	21
Dissolved perchlorate	12	3	3	3	21
Total/dissolved manganese	24	6	6	6	42
Dissolved hexavalent chromium	12	3	3	3	21
Total/dissolved 4,4'-DDTs[2]	24	6	6	6	42
Catch Basin Sediment					
Total solids	24	2	2	2	30
Perchlorate	24	2	2	2	30
Manganese	24	2	2	2	30
Hexavalent chromium	24	2	2	2	30
4,4'-DDTs[2]	24	2	2	2	30
Optional Sampling					
Stormwater particle size (TSS)	4	1	1	1	7
Surface soil[3]	--	--	--	--	--

Notes:

[1] Number of samples obtained from the Stormwater Interim Remedial Measure Workplan (Integral 2006).

[2] Includes 4,4'-DDT, 4,4'-DDE, and 4,4'-DDD.

[3] Number of surface soil samples to be determined pending the results of the catch basin sampling.

DI - deionized

Table A5-2. Laboratory Methods.

Analytes	Laboratory	Sample Preparation		Quantitative Analysis	
		Protocol	Procedure	Protocol	Procedure
Stormwater					
Conventional Analyses					
Total suspended solids (TSS)	CAS	EPA 160.2	Filtration and drying	EPA 160.2	Gravimetric
Inorganic Analyses					
Dissolved perchlorate	CAS	EPA 314.0	Filtration, 0.45 µm filter, if needed	EPA 314.0	Ion chromatography
Dissolved hexavalent chromium	CAS	EPA 7195	Coprecipitation	EPA 7191	GFAAS
Metals					
Total/dissolved manganese	CAS	EPA 3005	Acid digestion	EPA 6010B	ICP-AES
Organochlorine Pesticides					
Total/dissolved 4,4'-DDTs[1]	CAS	EPA 3550B	Sonication	EPA 8081A	Dual column GC/ECD
		EPA 3630C	Silica Gel Cleanup		
		EPA 3660B	Sulfur cleanup		
		EPA 3630C	Florisil® cleanup		
Catch Basin Sediment					
Inorganic Analyses					
Perchlorate	CAS	EPA 314.0	DI water leach	EPA 314.0	Ion chromatography
Hexavalent chromium	CAS	EPA 3060A	Alkaline digestion	EPA 7196A	Colorimetry
Metals					
Manganese	CAS	EPA 3050B	Acid digestion	EPA 6010B	ICP-AES
Organochlorine Pesticides					
4,4'-DDTs[1]	CAS	EPA 3550B	Sonication	EPA 8081A	Dual column GC/ECD
		EPA 3630C	Silica Gel Cleanup		
		EPA 3660B	Sulfur cleanup		
		EPA 3630C	Florisil® cleanup		

Notes:

[1] Includes the sum of 4,4'-DDT, 4,4'-DDE, and 4,4'-DDD.

CAS - Columbia Analytical Services
DI - deionized
ICP/AES - Inductively Coupled Plasma/Atomic Emission Spectroscopy
GC/ECD - Gas Chromatography/Electron Capture Detection
GFAAS - graphite furnace atomic absorption spectrometry

Table A6-1. Measurement Quality Objectives

Analysis	Bias (percent)	Precision (RPD)	Completeness (percent)
Stormwater Samples			
Total suspended solids	75-125	± 35	95
Dissolved perchlorate	75-125	± 35	95
Dissolved hexavalent chromium	75-125	± 20	95
Total/dissolved manganese	75-125	± 20	95
Total/dissolved 4,4'-DDTs[1]	30-150	± 50	95
Catch Basin Sediment Samples			
Perchlorate	75-125	± 35	95
Hexavalent chromium	85-115	± 35	95
Manganese	85-115	± 35	95
4,4'-DDTs[1]	30-150	± 50	95

Notes:

[1] Includes 4,4'-DDT, 4,4'-DDE, and 4,4'-DDD.

RPD - relative percent difference

Table A6-2. Analytes and Method Reporting Limits for Stormwater Samples

Analyte	CAS number[1]	Units	MDL[2]	MRL
Conventional Analyses				
Total suspended solids	--	mg/L	1	5
Inorganic Analyses				
Dissolved perchlorate	14797-73-0	µg/L	0.5	2
Dissolved hexavalent chromium	18540-29-9	µg/L	0.6	2
Metals				
Total/dissolved manganese	7439-96-5	µg/L	2	5
Organochlorine Pesticides				
Total/dissolved 4,4'-DDD	72-54-8	µg/L	0.004	0.01
Total/dissolved 4,4'-DDE	72-55-9	µg/L	0.003	0.01
Total/dissolved 4,4'-DDT	50-29-3	µg/L	0.005	0.01

Notes:

[1] CAS registry numbers are unique numerical identifiers for chemical compounds. They are also referred to as CAS numbers, CAS RNs or CAS #s. Chemical Abstracts Service (CAS), a division of the American Chemical Society, assigns these identifiers to every chemical that has been described in the literature. The intention is to make database searches more convenient, as chemicals often have many names. Almost all molecule databases today allow searching by CAS number.

[2] The laboratory's current MDL is provided when an MDL study has been completed for the proposed method. When no MDL is provided, the laboratory will complete an MDL study prior to analysis of samples for this project.

MDL - method detection limit

MRL - method reporting limit

Table A6-3. Analytes and Method Reporting Limits for Catch Basin Sediment Samples

Analyte	CAS number[1]	Units[2]	MDL[3]	MRL[4]
Inorganic Analyses				
Perchlorate	14797-73-0	µg/kg	2	20
Hexavalent chromium	18540-29-9	mg/kg	0.05	0.5
Metals				
Manganese	7439-96-5	mg/kg	0.3	1
Organochlorine Pesticides				
4,4'-DDD	72-54-8	µg/kg	0.093	1
4,4'-DDE	72-55-9	µg/kg	0.076	1
4,4'-DDT	50-29-3	µg/kg	0.17	1

Notes:

[1] CAS registry numbers are unique numerical identifiers for chemical compounds. They are also referred to as CAS numbers, CAS RNs or CAS #s. Chemical Abstracts Service (CAS), a division of the American Chemical Society, assigns these identifiers to every chemical that has been described in the literature. The intention is to make database searches more convenient, as chemicals often have many names. Almost all molecule databases today allow searching by CAS number.

[2] All units expressed on a dry weight basis.

[3] The laboratory's current MDL is provided when an MDL study has been completed for the proposed method. When no MDL is provided, the laboratory will complete an MDL study prior to analysis of samples for this project.

[4] The MRL is provided on a dry-weight basis and assumes 50% moisture in the samples. The MRL for project samples will vary with moisture content in the samples.

MDL - method detection limit

MRL - method reporting limit

Table B2-1. Sample Containers and Preservation Requirements

Analysis	Laboratory	Container		Preservation	Holding Time
		Type	Size		
Stormwater					
Total suspended solids	CAS	HDPE	1 L	4 ± 2°C	7 days
Dissolved perchlorate	CAS	HDPE	500 mL	4 ± 2°C	28 days
Total manganese	CAS	HDPE	500 mL	1 mL of 1:1 HNO_3; 4 ± 2°C	6 months
Dissolved manganese	CAS	HDPE	500 mL	1 mL of 1:1 HNO_3; 4 ± 2°C	6 months
Dissolved hexavalent chromium	CAS	HDPE	500 mL	4 ± 2°C	24 hours
Total 4,4'-DDTs[1]	CAS	AG	1 L	4 ± 2°C	7 / 40 days[2]
Dissolved 4,4'-DDTs[1]	CAS	AG	1 L	4 ± 2°C	7 / 40 days[2]
Catch Basin Sediments					
Perchlorate	CAS	WMG	2 oz.	4 ± 2°C	28 days
Manganese	CAS	WMG	8 oz.	4 ± 2°C	6 months[3]
Hexavalent chromium	CAS	WMG	8 oz.	4 ± 2°C	28 days
4,4'-DDTs[1]	CAS	WMG	8 oz.	4 ± 2°C	14 / 40 days[3,4]

Notes:

[1] Includes 4,4'-DDE, 4,4'-DDD, and 4,4'-DDT.

[2] The holding time is 7 days from collection to extraction and 40 days from extraction to analysis.

[3] Holding time for frozen samples is 1 year.

[4] The holding time is 14 days from collection to extraction and 40 days from extraction to analysis.

CAS - Columbia Analytical Services
AG - amber glass
HDPE - high density polyethylene
HNO_3 - nitric acid
WMG - wide mouth glass

ATTACHMENT

Columbia Analytical Services
Quality Assurance Manual

(Attached CD)

APPENDIX C

Standard Operating Procedures

STANDARD OPERATING PROCEDURE SOP-1: CATCH BASIN SEDIMENT SAMPLING

Scope and Application

The procedures presented in this SOP are intended for collecting representative samples of solids in shallow storm water catch basins with filter socks. If deeper catch basins are to be sampled, the field team leader may need to modify the SOP to include the use of a hand auger or similar device to collect the samples.

Supplies and Equipment

- Camera
- Stainless-steel scoop, trowel, or spoon
- Large stainless steel mixing bowl and spoon
- Tape Measure
- Stainless steel rod or disposable wooden dowels
- Laboratory-supplied sample containers, insulated coolers, and ice
- Ziploc® Bags
- Chain-of-custody forms, custody seals, sample labels
- Field logbook, catch basin sediment field collection form, and pens
- Work Plan, Quality Assurance Project Plan (QAPP), and Health and Safety Plan (HASP)
- PPE (safety glasses, steel-toed boots, nitrile gloves, and any other items required by the site HASP)
- Decontamination materials

Procedures

1. Gain access to the catch basin by moving the steel grate using a crowbar, hook, or similar device. Note: Depending on the size of the catch basin, it may take two people to safely move the grate.

2. Record weather conditions at the time of sampling and the last known rainfall event(s)

3. Record location of catch basin. Include potential solids or contaminant sources such as construction activities, erosion, equipment storage or use, waste or material storage, vehicles, exhaust vents, onsite processes, etc. Site features, distances, flow directions, and gradients should be noted or sketched on a site map. Photo-document the catch basin.

4. Record dimensions of the catch basin and sketch the inlet and outlet pipes. The source of inlet flows and destination of outlet flows should be noted, if known.

5. Note the presence of water, visible flows, signs of flooding, clogging, debris in or around the catch basin, blocked inlets/outlets, staining, etc.

6. Note any apparent evidence of contamination in the catch basin, such as odor, sheen, discoloration, etc. of water of solids

7. Measure the depths of solids in the catch basin and the total depth of the catch basin or sump. Use a decontaminated metal rod or disposable wooden dowel to probe the total depth of the catch basin.

8. If there is standing water in the catch basin, the water may be pumped out to facilitate sample collection. Pump the water slowly from the top of the water column and leave a thin layer of water in the catch basin so that the fine sediments are not disturbed. Document all steps taken to remove water from the catch basin. The water is to be disposed of in accordance with the Work Plan and SOP-11.

9. Using a decontaminated stainless steel spoon, scoop, or trowel, collect and equal amount of material from five locations in the catch basin or filter sock: each corner (or if round, each compass point [i.e., north, south, east, and west]) and the center. Material recovered at each point should be a composite of the total depth of accumulated material, unless otherwise specified in the Work Plan. Repeat as necessary in order to obtain the required sample volume. If the sample is collected from a filter sock, be careful not to tear the filter material during collection.

10. If required for analysis, first collect VOC samples (prior to any homogenization) from a discrete location, placing the samples in the appropriate-size containers. Label sample containers before filling in accordance with SOP-5.

11. Place sampled solids into a decontaminated stainless steel mixing bowl. Mix thoroughly using a decontaminated stainless steel spoon until the color and texture are consistent throughout.

12. Collect a suitable portion of the mixed solids with a decontaminated or disposable stainless steel spoon and place into each appropriate sample container. Label sample containers before filling in accordance with SOP-5.

13. Describe the sediment in accordance with ASTM D2488 (SOP-12).

14. Complete all pertinent field QA/QC documentation, logbooks, and field data sheets. Record any deviations from the specified sampling procedures or any obstacles encountered.

15. Decontaminate the stainless steel mixing bowl, scoop, spoon, and trowel in accordance with SOP-9.

16. Package and ship samples according to procedures in the QAPP and SOP-6.

STANDARD OPERATING PROCEDURE SOP-2: OUTFALL WATER SAMPLING

Scope and Application

The following procedures are designed for sampling outfall water. Samples can be collected from storm drains, outfalls, or flumes. The procedures may be modified by the field team leader if site conditions (e.g., configuration of outfall) warrant it.

Supplies and Equipment

- Vacuum hand pump with new disposable filtration units
- Laboratory-supplied sample containers, insulated coolers, and ice
- Water quality meter and calibration solutions
- Ziploc® Bags
- Chain-of-custody forms, custody seals, sample labels
- Camera
- Field logbook, outfall water sample collection field data forms, and pens
- Work Plan, Quality Assurance Project Plan (QAPP), and Health and Safety Plan (HASP)
- PPE (safety glasses, steel-toed boots, nitrile gloves, and any other items required by the site HASP)
- Decontamination materials

Procedures

1. Record weather conditions at the time of sampling and last known rain fall event(s).
2. Record the location and sketch the configuration of the outfall. Photo-document the outfall.
3. Gain access to the Parshall Flume structure. Note: If moving the outfall cover is required, safe removal of the cover will likely take four people and the use of a

large crow bar, hook, or similar device. Integral personnel are not trained in confined space entry and will not, under any circumstances, enter the manhole or vault.

4. Estimate the flow rate of the outfall in accordance with SOP-3.

5. Attach a new laboratory-supplied sample container to a sampling pole (e.g., swing sampler) using the stainless steel strap on the end of the sampler (if equipped) or similar device. Label sample containers before filling in accordance with SOP-5.

6. Submerse sample bottle in water at the inlet of the Parshall Flume with the mouth pointing upstream and below the water surface. Be careful not to touch the sides of the manhole or vault.

7. If volatile organic compound (VOC) analysis is required, collect samples for VOCs using a precleaned unpreserved glass sample bottle. Transfer the contents of the sample bottle to 40-mL volatile organic analyte (VOA) vials making absolutely certain that there are no bubbles adhering to the sides or top of the VOA container and that there is no headspace in the container. Be sure to check that the condition of samples is acceptable in the VOA containers before leaving each sampling site. If any air bubbles are present, the VOA sample must be retaken using a fresh sample container.

8. Repeat steps 5 through 7 until all sample containers are filled.

9. If field filtration for dissolved constituents is required, collect samples in a new laboratory-supplied unpreserved sample bottle and transfer the water to a hand pump filtration apparatus. After filtration, the water can be transferred to the appropriate sample bottles.

10. If required by the Work Plan, collect an aliquot of water for measuring water quality parameters (e.g., temperature, dissolved oxygen, pH, turbidity, and specific conductance) using a new unpreserved laboratory-supplied sample container. Water quality parameters should be collected immediately after the sample is collected.

11. Complete all pertinent field QA/QC documentation, logbooks, sample labels, and field data sheets. Record any deviations from the specified sampling procedures or any obstacles encountered.

12. Decontaminate the stainless steel strap and end of the sampling pole in accordance with SOP-9.

13. Package and ship samples according to procedures in the QAPP and SOP-6.

STANDARD OPERATING PROCEDURE SOP-3: MEASUREMENT OF FLOW RATE IN OUTFALLS

Scope and Application

The following procedures are designed to estimate the flow rates in outfalls. The outfalls at the Arkema Plant Site commonly contain a Parshall flume, which is an open-channel flow section in which the flow rate can be estimated from the depth of water in the flume.

Supplies and Equipment

- 2″ x 4″ board, approximately 6′ to 8′, in length with an attached tape measure at the bottom 2 ft board capable of estimating water levels.
- Electronic water level meter
- Tape measure
- Camera
- Field logbook and pens
- Work Plan and Health and Safety Plan (HASP)
- PPE (safety glasses, steel-toed boots, nitrile gloves, and any other items required by the site HASP)
- Decontamination materials

Procedures

1. Record weather conditions at the time of sampling and the last known rainfall event(s).
2. Record the location and sketch the configuration of the outfall. Photo-document the outfall.
3. Gain access to the inlet structure of the outfall. At this inlet structure is a drop section approximately 1.5 to 2 feet deep. Note: If required, moving the outfall cover safely will likely take four people and the use of a large crowbar, hook, or

similar device. Integral personnel are not trained in confined space entry and will not, under any circumstances, enter the manhole or vault.

4. Measure the depth from the bottom of the inlet drop structure to the top of the structure. Also measure, or if measurement is impossible estimate, the length and width of the drop structure. Then measure the depth from the top of the drop structure to the top of the stream of water.

5. With the assistance of Plant Site personnel, evacuate the drop structure of all water to the extent possible. Record the water level, then estimate the time required fill the drop structure. The stormwater flowrate can be estimated by dividing the volume of the drop structure filled by the time it took to fill.

STANDARD OPERATING PROCEDURE SOP-4: SURFACE SOIL SAMPLING

Scope and Application

The following procedures are designed to be used to collect surface soil samples (i.e., 0-4 inches below ground surface). Soil samples should be collected from areas having lower levels of constituents of interest first, followed by stations with higher expected levels of constituents of interest.

Supplies and Equipment

- Stainless-steel scoop, trowel, or spoon
- Large stainless steel mixing bowl and spoon
- Laboratory-supplied sample containers, insulated coolers, and ice
- Chain-of-custody forms, custody seals, sample labels
- Ziploc® Bags
- Camera
- Tape measure
- Field logbook, surface soil field collection form, and pens
- Work Plan, Quality Assurance Project Plan (QAPP), and Health and Safety Plan (HASP)
- PPE (safety glasses, steel-toed boots, nitrile gloves, and any other items required by the site HASP)
- Decontamination equipment

Procedures

1. Locate the sample station as directed in the SAP. Label containers with sample tags prior to filling in accordance with SOP-5. If analytical testing will be performed for volatile organic compounds (VOCs), the VOC sample will be collected first (with a minimum of disturbance) by placing the sample into the container with a minimum amount of headspace and sealed tightly.

2. Expose the soil surface by clearing an approximately 1-ft² area at the sampling site of any rocks or organic material greater than approximately 3 in. in size. Note any material removed from the sampling site in the field notebook.

3. Using a decontaminated stainless-steel sampling tool, excavate soil to the depth specified in the work plan.

4. If required for analysis, first collect VOC samples (prior to any homogenization) from a discrete location, placing the samples in the appropriate containers. Label sample containers before filling in accordance with SOP-5.

5. Place additional sample material in a decontaminated plastic or stainless-steel mixing bowl.

6. Thoroughly mix and homogenize the sample using disposable equipment or a decontaminated stainless-steel spoon until the color and texture are consistent throughout.

7. If required for analysis, first collect samples for gradation tests (ASTM D6913-04e1) before any large rocks are removed from the homogenized soil.

8. Rocks that are greater than 0.5 in. in diameter may be discarded from the homogenized soil after they are positively identified and their percentage contribution to the homogenized soil volume has been determined and noted in the field notebook.

9. Remove samples of the homogenized soil from the mixing dish and place in the appropriate size sample container. The sample container should be filled with soil to just below the container lip, and the container should be sealed tightly. Label sample containers before filling in accordance with SOP-5.

10. Describe the soil in accordance with ASTM D2488 (SOP-12).

11. Mark the sampling site with a wire flag, wooden stake, metal rebar, or flagging, as appropriate.

12. Complete all pertinent field QA/QC documentation, logbooks, sample labels, and field data sheets. Record any deviations from the specified sampling procedures or any obstacles encountered.

13. Decontaminate all sampling equipment (SOP-9).

14. Package and ship samples according to procedures in the QAPP and SOP-6.

STANDARD OPERATING PROCEDURES SOP-5:

SAMPLE LABELING

Scope and Application

This SOP describes the general Integral procedures for sample labeling.

Supplies and Equipment

- Site logbook
- Chain-of-custody form(s)
- Sample labels

Procedures

Environmental samples will be labeled using a unique designation system consisting of:

- Sample identification number
- Tag number
- Sample location identification.

The following describes each of the numbers.

Sample ID Number

The sample ID number is a unique number that is generally assigned six digits, including a two-digit media code and a four-digit number. The media code may be site-specific, but the Integral default codes are as follows:

- SS – Surface soil
- BH – Subsurface soil or rock (typically from borehole)
- GW – Groundwater
- SW – Surface water
- PW – Pore water
- BT – Biota or biological tissue

The exact sample ID numbering scheme may vary from project to project. Variances in the sample numbering scheme will be described in the field sampling plan for the field

effort. Each sample will be assigned a unique sample number. Note that in cases where samples consist of multiple bottles from the same location, each bottle will be assigned the same sample number. Replicates from the same location, however, will be assigned a different sample number. The sample number is recorded on the sample label the chain-of-custody form, and the field log book. Examples of each can be found in Appendix E.

Sample Tag Number

The sample tag number is a unique five- or six-digit number assigned to each sample label (or "tag") for multiple bottles per sample. Integral sample labels come with a pre-printed sample tag number. The purpose of the tag number is to provide a unique tracking number to a specific sample bottle. This allows for greater flexibility in tracking sample bottles and assists in field quality control when filling out documentation and shipping. Sample tags are not used by many other consultants, and there may be resistance from such firms during teaming situations. However, experience has shown that tags can be very valuable, both in the field and while processing data from field efforts.

Sample tag numbers will be recorded on the sample label (typically pre-printed), the chain-of-custody form (Appendix E), and the field log book (Appendix E).

Sample Location ID

The sample location ID is a unique designation that identifies where the sample was collected. For sediment samples, this number is frequently the station ID (e.g., WB-10). The sample location ID will also indicate if the sample is a field quality control sample (e.g., WB-10-DUP). The sample location ID is recorded in the field logbook *only* and is not provided on the sample label or chain-of-custody form.

Sample Documentation

SOP-8 discusses the sample labeling information that should be documented in the site logbook. More or less information may be required on a site-specific basis.

STANDARD OPERATING PROCEDURE SOP-6: SHIPPING AND HANDLING OF SAMPLES

Scope and Application

This SOP presents the procedures to be used when packing samples either for hand delivery or for shipping to the laboratory.

Supplies and Equipment

- Work Plan
- Site logbook
- Sample logs
- Sample labels
- Indelible black ink pens
- Ziploc® bags
- Cooler
- Blue Ice® or other ice packs
- Strapping tape or duct tape
- Chain-of-custody forms
- Custody seals
- Bubble wrap, newspaper, or other packing material

Procedures

Sample Preparation

The following steps should be followed to ensure the proper transfer of samples from the field to the laboratory:

1. Appropriately document all samples using the proper logbooks (see SOP-8), chain-of-custody forms (see SOP-7), and sample labeling techniques (see SOP-5).
2. Make sure all applicable laboratory quality control sample designations have been made on the chain-of-custody forms. Samples that will be archived for future possible analysis should be clearly identified on the chain-of-custody form and

should also be labeled as "Do Not Analyze: Hold and archive for possible future analysis" as some laboratories interpret "archive" to mean continue holding the residual sample after analysis.

3. Notify the laboratory contact and the project QA/QC coordinator that samples are being shipped and provide an estimated arrival time. Send copies of all chain-of-custody forms to the QA/QC coordinator or project manager, as appropriate.
4. If samples are to be stored overnight before shipping, they must be secured in a locked room or other inaccessible area. The cooler should be sealed with a signed and dated custody seal as outlined in SOP-7. Before shipping, the Blue Ice® in the cooler should be replaced and the cooler resealed according to the instructions in this SOP.
5. Clean the outside of all dirty sample containers to remove any residual material that may lead to cross-contamination.
6. Prepare samples for shipment according to the appropriate procedures below.

Samples to be hand-delivered to the laboratory:

1. Place each sample in a plastic Ziploc® bag and align the label so it can be easily read. Seal the bag.
2. Place individual samples into the cooler so that each container is safely secured.
3. Include enough ice packs to maintain a temperature of 4ºC or lower.
4. Complete a chain-of-custody form for the containers and seal in a Ziploc® bag.
5. Tape bag containing the chain-of-custody form to the inside of the cooler lid. Always transport the cooler together with its accompanying chain-of-custody form.
6. Close and latch cooler and affix signed custody seals over the edge of the lid and the top of the cooler body at front and rear.
7. Deliver samples to the laboratory and obtain a signed copy of the chain-of-custody form for tracking purposes.

Samples to be shipped to the laboratory:

1. Place each sample in a plastic Ziploc® bag and align the label so it can be easily read. Seal the bag.
2. Wrap each sample with bubble wrap, newspaper, or other packing material.
3. Place individual samples into the cooler so that the addition of ice or Blue Ice® and/or packing materials will prevent significant movement of samples during

shipping. Keep in mind that the cooler may be inverted during shipment. Each container should have clearance on all sides.

4. Fill the void spaces with ice packs, bubble wrap, newspaper, or other packing material to ensure samples do not break during shipment.
5. Cover the head space inside the cooler with ice packs. Include enough ice packs to maintain a temperature of 4ºC or lower.
6. Tape bag containing the chain-of-custody form to the inside of the cooler lid. Remember to remove the last copy of the form for tracking purposes.
7. Close and latch cooler, and wrap cooler and lid with at least two turns of strapping, duct, or packaging tape. Affix signed custody seals over the edge of the lid and the top of the cooler body at front and rear and add additional tape around the custody seals.
8. Label coolers with up arrows and information to comply with DOT requirements. All samples should be shipped to the laboratory priority overnight by a shipping company that provides a tracking number (e.g., FedEx).
9. Notify the laboratory approximately when and how many samples will arrive. The samples must be kept under refrigeration (or packed with ice) between sampling and analysis.

STANDARD OPERATING PROCEDURE SOP-7: SAMPLE CUSTODY

Scope and Application

This SOP describes Integral procedures for custody management of environmental samples. A stringent, established program of sample chain-of-custody will be followed during sample storage and shipping activities to account for each sample. The procedure outlined herein will be used in conjunction with SOP-8, which covers the use of sample logbooks; SOP-5, which covers sample labeling; and SOP-6, which covers sample packaging and shipping. Chain-of-custody forms ensure that samples are traceable from the time of collection through processing and analysis until final disposition. A sample is considered to be in a person's custody if any of the following criteria are met:

1. The sample is in the person's possession.
2. The sample is in the person's view after being in possession.
3. The sample is in the person's possession and is being transferred to a designated secure area.
4. The sample has been locked up to prevent tampering after it was in the person's possession.

Procedures

An example chain-of-custody form documents sample possession from the time of collection through the final disposition of the sample. The form also provides information to the laboratory regarding what analyses are to be performed on the samples that are shipped.

The chain-of-custody form will be completed after each field collection activity and before the samples are shipped to the laboratory. Sampling personnel are responsible for the care and custody of the samples until they are shipped. When transferring possession of the samples, the individuals relinquishing and receiving the samples must sign the chain-of-custody form(s), indicating the time and date that the transfer occurs.

The chain-of-custody forms each consists of 3-part NCR paper with white, yellow, and pink copies. The pink copy is kept by the sampler, and the white and yellow are included with the samples in the transfer container. Each custody form has a unique 4-

digit number. This number and the samples on the form are recorded in the logbook. The following guidelines are followed to ensure consistent shipping procedures and to maintain the integrity of the samples:

1. Each chain-of-custody form must be appropriately signed and dated by the sampling personnel. The person who relinquishes custody of the samples must also sign this form.
2. The chain-of-custody form should not be signed until the information has been checked for inaccuracies by the lead sampler. All changes should be made by drawing a single line through the incorrect entry and initialing and dating it. Revised entries should be made in the space below the entries. On the handwritten chain-of-custody forms, spaces remaining at the bottom of the page after corrections are made should be marked out with single lines. This procedure will preclude any unauthorized additions.
3. At the bottom of each chain-of-custody form is a space for the signatures of the persons relinquishing and receiving the samples and the time and date that the transfer occurred. The time that the samples were relinquished should match exactly the time they were received by another party. Under no circumstances should there be any time when custody of the samples is undocumented.
4. If samples are sent by a commercial carrier not affiliated with the laboratory, such as Federal Express or UPS, the name of the carrier and air bill should be recorded on the chain-of-custody forms, signed and copied, and sealed inside the transfer container.
5. If errors are found after the shipment has left the custody of sampling personnel, a corrected version of the forms must be prepared and sent to all relevant parties. Minor errors can be rectified by making the change on a copy of the original with a brief explanation and signature. Errors in the signature block may require a letter of explanation.
6. Samples that are archived internally should be accompanied by a chain-of-custody form. While samples remain in the sampler's custody before being shipped, all containers will be kept in sight of sampling personnel or in a secured area to preclude tampering with the samples.

STANDARD OPERATING PROCEDURE SOP-8:

SITE LOGBOOK

Scope and Application

This SOP describes the process for keeping a site logbook(s). The logbook is a bound notebook with consecutively numbered pages that cannot be removed. The logbook should contain all-weather paper, such as "Rite in the Rain®" brand notebooks. All information relevant to field operations must be properly documented to ensure that activities are accounted for and can be reconstructed from written records.

The site logbook is issued by the project manager (or designee) to the appropriate site personnel for the direction of onsite activities (e.g., reconnaissance survey team leader, sampling team leader). It is the responsibility of this person (or designee) to keep the site logbook current while in his or her possession and return it to the project manager or to another field team member. Following the completion of all fieldwork, the site logbook is returned to the project manager for inclusion in the permanent site files.

Supplies and Equipment

- Rite-in-the-Rain® Logbook
- Indelible ink pen

Procedures

Several types of logbooks may be used for this purpose and should be consistently used by field crews (e.g., field logbooks, sample logbooks, field data logbooks). Logbooks will be labeled on the cover with the project name, dates of field work, and the project number (or other number assigned by Integral). A separate bound logbook with consecutively numbered pages will be used for each field project. Each logbook for a particular project will be numbered (e.g., *Project Name* Stormwater Investigation—Field Logbook *Number* 2).

The information recorded in each logbook will be written in indelible ink. Field documentation should include only a factual description of site-related activities and observations made. Field personnel should not include superfluous comments or speculation. All corrections will consist of a single line-out deletion, followed by the author's initials and the date.

The purpose of the field logbook is to document events that occur and record data measured in the field to the extent that someone not present at the site can reconstruct the activity without relying on the memory of the field crew. Each page in the field logbook will be initialed and dated by all persons making entries on that page. The author will sign and date the last page at the end of each day, and a line will be drawn through the remainder of the page. The logbooks, at a minimum, must contain the following information:

1. A purpose and description of the field task
2. Project name, site name, sequential book number(s) (if they exist), and the start and end date on the cover of each logbook
3. Arrival and departure times of field crew, major site equipment, and visitors
4. The location and description of the work area, including sketches, map references, and photograph log, if appropriate
5. The names and titles of field personnel and anyone present during the field work, including their affiliations
6. The name, agency, and telephone number of any field contacts
7. The meteorological conditions at the beginning of the field work and any changes that occur throughout the day, including the approximate time of the change
8. Details of the field work performed, with a description of any deviations from the work plan or standard operating procedures
9. All field measurements made (unless a specific logbook or sampling form [i.e., borehole log or outfall water sampling form] is available for this purpose), including the time of measurement
10. Any field results not appearing in the field data logbook, including station identification and location, date, and time of measurement
11. Cross-references of numbers for duplicate samples
12. References to other logbooks or field forms used to record information (e.g., station log, sample log, health and safety log, sample collection forms)
13. Sample shipment information (i.e., shipping manifests, chain-of-custody form numbers, carrier, air bill numbers, time, addresses)
14. A record of IDW quantities, storage and handling procedures.

During the day, a summary of all site activities and level of personal protective equipment should be recorded in the logbook. The information need not duplicate

anything recorded in other field notebooks (e.g., Site Health and Safety Officer's notebook, calibration logbook, etc.), but should summarize the contents of the other notebooks and refer to the page locations in these notebooks for detailed information.

If measurements are made at any location, the measurements and equipment used must either be recorded in the site logbook or reference must be made to the notebook and page number(s) on which they are recorded. All maintenance and calibration records for equipment should be traceable through field records to the person using the instrument and to the specific piece of instrumentation itself.

All entries should be made in indelible blue or black pen. No erasures are permitted. If an incorrect entry is made, the data should be crossed out with a single strike mark, and initialed and dated.

Field logbooks will be photocopied after each period in the field, and photocopies will be stored in the project files. After field activities are completed, logbooks will be stored in the permanent project file. No bound logbooks should be discarded, even if they are illegible or contain inaccuracies that require a replacement document. When not in use, all logbooks will be stored in the permanent project file.

Photographs

In certain instances, photographs of sampling stations may be taken using a camera-lens system with a perspective similar to the naked eye. Photographs should include a measured scale in the picture, when practical. The following items should be recorded in the field logbook for each photograph taken:

1. The photographer's name, the date, the time of the photograph, and the general direction faced (orientation)
2. A brief description of the subject and the fieldwork portrayed in the picture
3. The sequential number of the photograph and the roll number on which it is contained
4. If digital photographs are collected, the file name, date, file location, description, orientation, and photographs should be recorded.

The slides, prints, or disks (as appropriate) and associated negatives will be placed in the project files after the film is developed. Any supporting documentation from the field logbooks will be photocopied and placed in the task files to accompany the slides, prints, or disks.

Equipment Calibration Records

Equipment calibration records, including instrument type and serial number, calibration supplies used, calibration methods and calibration results, and date, time, and personnel performing the calibration should be recorded in the field logbook. At a minimum, equipment used during the investigation should be calibrated daily in accordance with the manufacturers' recommendations.

STANDARD OPERATING PROCEDURE SOP-9: EQUIPMENT DECONTAMINATION

Scope and Application

This SOP describes procedures for decontamination of sampling equipment, drilling equipment, and other tools that could come in contact with contaminated media (Ecology 2003, PSEP 1997). Personnel performing the decontamination procedures will wear protective clothing as specified in the site-specific Health and Safety Plan.

Supplies and Equipment

- Plastic sheeting
- Steam cleaner and collection basin (if required)
- 55-gallon, DOT-approved drums (if required)
- Non-phosphate detergent (e.g., Alconox® or Liquinox®)
- Acid rinses (inorganic constituents), either reagent-grade diluted nitric or hydrochloric acid (if required)
- Solvent rinses (organic constituents), either pesticide-grade methanol, hexane, isopropopanol or acetone (if required)
- Deionized or distilled water rinse available from retail stores. Note that distilled water generally contains low levels of organic contaminants and can not be used for field blanks (must receive reagent-grade from laboratory).
- Tap water rinse from local tap water.
- 5-gallon buckets, or other appropriate containers
- Scrub brushes
- Teflon™ squirt bottles
- Gloves (e.g., nitrile or polyethylene)
- Personal protective clothing

Procedures

Drill Rig or Test Pit Sampling Equipment Decontamination Procedures

1. Decontaminate sampling equipment before use, between samples and stations, and upon completion of sampling operations.
2. Equipment used during drilling/test pit operations should be decontaminated in the Exclusion Zone prior to transport to the Support Zone (refer to site-specific HASP).
3. If the steam-cleaning location is in an area outside of the Exclusion Zone, remove loose sediment on the drill rig, augers, drill pipe, and rods, and other large equipment at the drill site, then move the equipment directly to the steam-cleaning decontamination area for more thorough cleaning.
4. To decontaminate a drill rig or backhoe, pressure wash with a steam cleaner using potable water rinse upon mobilization, between drilling locations, and upon demobilization. Cleaning water can generally be allowed to drain directly on the ground near the station (refer to the work plan).
5. To decontaminate auger, drill rods, and other downhole tools, pressure wash with a steam cleaner and potable water rinse upon mobilization, between drilling locations, and upon demobilization. All decontamination fluids are to be containerized for proper disposal.
6. To decontaminate split-spoon and hand-auger samplers, wash with laboratory-grade detergent/water solution, rinse with tap water and a final distilled water rinse. If the samplers were exposed to visibly contaminated sediments (e.g., creosote, diesel, etc), include a methanol rinse followed by a hexane rinse. A hexane rinse should be followed by another distilled water rinse. To the extent possible, allow to air dry prior to sampling. If the split-spoon is not used immediately, wrap it in aluminum foil. All decontamination fluids are to be containerized for proper disposal.

Decontamination of Sampling Implements and Processing Materials

1. Decontaminate sampling implements (e.g., spoons and knives) and other processing materials such as mixing bowls and pans before use, between samples, and upon completion of sampling operations.
2. To decontaminate sampling spoons, mixing bowls, and other hand-held tools, wash using a laboratory-grade detergent/water solution, rinse with tap water, followed by distilled water or ASTM Type II reagent-grade water. As described above, if the sediment is visibly contaminated, a hexane rinse may be necessary following a methanol rinse to remove water. This is followed by another distilled

water rinse. To the extent possible, allow to air dry. Once decontaminated, this equipment will be wrapped in aluminum foil to prevent contamination by airborne contaminants during transportation to the sampling site. Containerize all decontamination fluids for proper disposal.

3. To decontaminate sampling spoons used to collect volatile organics, wash the spoon using a laboratory-grade detergent/water solution, and rinse with distilled water. Wrap the spoon in aluminum foil. The solvent rinses are eliminated in order to avoid interference with the analysis. Containerize all decontamination fluids for proper disposal.
4. If necessary, to decontaminate wash buckets, pressure wash with a steam cleaner using a laboratory-grade detergent/water solution and potable water rinse upon mobilization, between station locations, upon demobilization, or as needed during sampling operations.

References

Ecology. 2003. Sediment sampling and analysis plan appendix. Guidance on the development of sediment sampling and analysis plans meeting the requirements of the sediment management standards (Chapter 173-204 WAC). Prepared by Washington State Department of Ecology, Olympia, WA.

PSEP. 1997. Puget Sound Estuary Program: recommended guidelines for sampling marine sediment, water columns, and tissue in Puget Sound. Final report. Prepared for the Puget Sound Estuary Program, U.S. Environmental Protection Agency, Region 10, Office of Puget Sound, Seattle, WA, and Puget Sound Water Quality Authority, Olympia, WA.

STANDARD OPERATING PROCEDURE SOP-10: QUALITY CONTROL SAMPLE PREPARATION

Scope and Application

This SOP describes procedures for preparation of field quality control samples collected during field investigations as described in the Work Plan and the quality assurance project plan (QAPP).

Supplies and Equipment

- Sample labels
- Indelible ink pens
- Master Sample Log and chain-of-custody forms
- Sample bottles with preservatives (if required)

Procedures

The following procedures describe the preparation of various types of field quality control samples. Although general collection frequencies are given below, the type and number of quality control samples collected are dependent upon project specific requirements.

Trip Blanks

Trip blanks are 40-milliliter (40-mL) glass sample bottles (with septum lids) filled in the analytical laboratory with analyte-free water. They are shipped to the field with the empty sample coolers and stored with those bottles until they are used. One set of trip blank samples is enclosed in each sample cooler sent to the analytical laboratory that contains volatile organic compounds samples for analysis. The field personnel do not open or otherwise disturb these samples except to label them with a sample number, if required, and prepare them for shipment with environmental samples. Trip blanks are analyzed for volatile organic compounds only.

Equipment Rinsates

Equipment rinsates are collected by capturing the final distilled or de-ionized water rinse from equipment cleaning. Decontamination procedures are detailed in SOP-9. These samples are collected during a sampling event by filling a full suite of environmental

sample containers with rinse water that has been poured over the field equipment (sample bowls, spoons, etc.) used during sample collection. The results are used to determine the potential for cross-contamination after equipment decontamination. Equipment rinsate results are reviewed during the data validation process. At a minimum, one equipment blank will generally be collected during each sampling event (where non-disposable equipment is used). Rinsate samples are analyzed for the same compounds as the related environmental samples.

Field Blanks

Field blanks are collected in the field during sampling activities by filling a full suite of environmental sample containers with analyte-free distilled or de-ionized water, at the field sampling location. At a minimum, one field blank is generally collected during each sampling event. Field blanks are analyzed for the same compounds as related environmental samples.

Field Duplicates/Splits

Duplicates or splits, except for volatile organic compound analyses, are collected, homogenized, and split at the sampling location. Volatile organic compound sediment samples are collected from the length of the sediment grab or core, and placed immediately into appropriate sample containers for packaging and shipment to the analytical laboratory. Duplicate water samples are collected simultaneously by alternately filling similar sample bottles during the collection procedure. Duplicate samples may either be submitted to the analytical laboratory as a blind sample, or may be identified to the laboratory, depending on project objectives. At a minimum, one duplicate sample will generally be collected during each sampling event for each type of medium. Duplicate environmental samples are analyzed for the same suite of analytes.

Field Replicate Samples

Field replicate samples are collected as separate samples from the same location as the initial sample collected. Unlike duplicate/split samples, they are not subsamples of one homogenous sample. They are collected and processed according to the same procedures followed for the initial sample. Similar to the field duplicates, they may either be submitted to the analytical laboratory as blind samples, or may be identified as replicate samples, depending on project objectives. Replicate environmental samples are analyzed for the same suite of analytes as the initial sample.

Water Source Blanks

Water source blanks are collected during field sampling activities by filling a full suite of environmental sample containers with water from the source used for decontamination and steam cleaning using the same procedures employed for collection of environmental water samples. At a minimum, one water source blank is generally collected during each

sampling event (the time frame determined by the arrival of sampling personnel at a sampling area until those personnel leave) and from each source of water used in decontamination and steam cleaning. Water source blanks are analyzed for the same compounds as the related environmental samples.

STANDARD OPERATING PROCEDURE SOP-11: INVESTIGATION-DERIVED WASTE HANDLING

Scope and Application

This SOP presents the method to be used when handling investigation-derived wastes during field sampling activities.

Supplies and Equipment

- 55-gallon drums
- Paint markers
- Tools (to open and close drum)
- Ziploc® bags
- Drum labels.

Procedures

1. Solid wastes needing to be containerized will be placed in properly labeled, DOT-approved, 55-gallon drums.
2. Sampling activities will generate personal protective equipment (PPE) and miscellaneous debris that need to be disposed of. Gross contamination will be removed from these items, and the items will be placed in plastic bags. Interim storage of these materials in plastic bags is acceptable. The bags are to be disposed of at an appropriate solid waste facility dumpster at the end of each day.
3. All filled or partially filled drums must be properly closed, sealed, labeled, and staged before demobilization. Full drums will be properly profiled and shipped off site to a RCRA Subtitle C facility.

STANDARD OPERATING PROCEDURE SOP-12:

BOREHOLE LOGGING AND FIELD CLASSIFICATION OF SOILS AND SEDIMENT

Scope and Application

The following procedures establish the minimum information that must be recorded in the field to adequately document soil borehole advancement activities performed during field exploration. The borehole log form must be filled out completely.

This SOP presents the field classification of soils to be used by Integral field staff. In general, Integral has adopted the procedures provided in ASTM Method D-2488-00 attached, Standard Practice for Description and Identification of Soils. ASTM D-2488-00 uses the Unified Soil Classification System (USCS) for naming soils. Field personnel are encouraged to study these procedures prior to initiation of field work.

Soil descriptions should be precise and comprehensive without being verbose. The overall impression of the soil should not be distorted by excessive emphasis on minor constituents. In general, the similarities of consecutive soil samples should be emphasized and minor differences de-emphasized. These descriptions will be used to interpret aquifer properties and other potential contaminant transport properties, rather than interpret the exact mineralogy or tectonic environment. Integral is primarily interested in engineering and geochemical properties of the soil.

Soil descriptions should be provided in the Soil Description column of the soil boring log for each sample collected. If there is no difference between consecutive soil samples, subsequent descriptions can be noted as "same as above" or minor changes such as "increasing sand" or "becomes dark brown" can be added.

The format and order of soil descriptions should be as follows:

- Group symbol—The group symbol should be placed in the Unified Symbol column.
- USCS group name—The USCS name should be identical to the ASTM D-2488-00 Group Name with the appropriate modifiers.
- Minor components.
- Color.
- Moisture.
- Additional descriptions.

Supplies and Equipment

- Soil log form (attached)
- Munsell® soil color chart

Procedures

1. The USCS is an engineering properties system that uses grain size to classify soils. The first major distinction is between fine-grained soils (more than 50 percent passing the No. 200 sieve [75 µm/0.029 in.]) and coarse-grained soils (more than 50 percent retained by the No. 200 sieve). Small No. 200 sieves are necessary to classify soils that are near the cutoff size.

2. Fine-grained soils are classified as either silts or clays. Field determinations of silts and clays are based on observations of dry strength, dilatancy, toughness, and plasticity. Field procedures for these tests are included in ASTM D-2488-00. If these tests are used, the results should be included in the soil description. At least one complete round of field tests should be performed for a site if these materials are encountered, preferably at the beginning of the field investigation. The modifiers "fat" and "lean" are used by ASTM to describe soils of high and low plasticity. The soil group symbols (i.e., CL, MH) already indicate plasticity characteristics, and these modifiers are not necessary in the description. Soils with high plasticity can be emphasized by describing them as "silty CLAY with high plasticity." Plasticity is an important descriptor because it is often used to interpret whether an ML soil is acting as either a leaky or a competent aquitard. For example, an ML soil can be dilatent/nonplastic and serve as a transport pathway, or it can be highly plastic and very impervious.

3. Coarse-grained soils are classified as either predominantly gravel or sand, with the No. 4 sieve (4.75 mm/0.19 in.) being the division. Modifiers are used to describe the relative amounts of fine-grained soil, as noted below:

Description	Percent Fines	Group Symbol
Gravel (sand)	<5 percent	GW, GP (SW, SP)
Gravel (sand) with silt (clay)	5–15 percent	Hyphenated names
Silty (clayey) gravel (sand)	>15 percent	GM, GC (SM, SC)

The gradation of a coarse-grained soil is included in the specific soil name (i.e., fine to medium SAND with silt). Estimating the percent of size ranges following the group name is encouraged for mixtures of silt sand and gravel. Use of the modifiers "poorly graded" or "well graded" is not necessary as they are indicated by the group symbol.

A borderline symbol is shown with a slash (GM/SM). This symbol should be used when the soil cannot be distinctly placed in either soil group. A borderline symbol should also be used when describing interbedded soils of two or more soil group names when the thickness of the beds are approximately equal, such as "interbedded lenses and layers of fine sand and silt." The use of a borderline symbol should not be used indiscriminately. Every effort should be made to place the soil into a single group. (One very helpful addition to the soil log form description is the percentage of silt/sand/gravel. Even if the geologist did not have sufficient time to properly define the soil, this percentage breakdown allows classification at a later date.)

4. Minor components such as cobbles, roots, and construction debris should be preceded by the appropriate adjective reflecting relative percentages: trace (0–5 percent), few (5–10 percent), little (15–25 percent), and some (30–45 percent). The word "occasional" can be applied to random particles of a larger size than the general soil matrix (i.e., occasional cobbles, occasional brick fragments). The term "with" indicates definite characteristics regarding the percentage of secondary particle size in the soil name. It will not be used to describe minor components. If a nonsoil component exceeds 50 percent of an interval, it should be stated in place of the group name.

5. The basic color of a soil, such as brown, gray, or red, must be given. The color term can be modified by adjectives such as light, dark, or mottled. Especially note staining or mottling. This information may be useful to establish water table fluctuations or contamination. The Munsell® soil color chart designation is the Integral color standard. These charts are readily available and offer a high degree of consistency in descriptions between geologists.

6. The degree of moisture present in the soil should be defined as dry, moist, or wet. Moisture content can be estimated from the criteria listed in Table 3 of ASTM D-2488-00.

7. Features such as discontinuities, inclusions, joints, fissures, slickensides, bedding, laminations, root holes, and major mineralogical components should be noted if they are observed. Anything unusual should be noted. Additional soil descriptions may be made at the discretion of the project manager or as the field conditions warrant. The Soil Boring Log Form lists some optional descriptions,

as does Table 13 of the ASTM standard. The reader is referred to the ASTM standard for procedures of these descriptions.

8. The contact between two soil types must be clearly marked on the soil boring log. The field geologist, who has the advantage of watching the drilling rate and cuttings removal and can talk with the driller in real time has a much better chance of interpreting the interval than someone in the office. If the contact is obvious and sharp, draw it in with a straight line. If it is gradational, a slanted line over the interval is appropriate. In the case where it is unclear, a dashed line over the most likely interval is used.

Designation: D 2488 – 00

Standard Practice for Description and Identification of Soils (Visual-Manual Procedure)[1]

This standard is issued under the fixed designation D 2488; the number immediately following the designation indicates the year of original adoption or, in the case of revision, the year of last revision. A number in parentheses indicates the year of last reapproval. A superscript epsilon (ε) indicates an editorial change since the last revision or reapproval.

This standard has been approved for use by agencies of the Department of Defense.

1. Scope *

1.1 This practice covers procedures for the description of soils for engineering purposes.

1.2 This practice also describes a procedure for identifying soils, at the option of the user, based on the classification system described in Test Method D 2487. The identification is based on visual examination and manual tests. It must be clearly stated in reporting an identification that it is based on visual-manual procedures.

1.2.1 When precise classification of soils for engineering purposes is required, the procedures prescribed in Test Method D 2487 shall be used.

1.2.2 In this practice, the identification portion assigning a group symbol and name is limited to soil particles smaller than 3 in. (75 mm).

1.2.3 The identification portion of this practice is limited to naturally occurring soils (disturbed and undisturbed).

NOTE 1—This practice may be used as a descriptive system applied to such materials as shale, claystone, shells, crushed rock, etc. (see Appendix X2).

1.3 The descriptive information in this practice may be used with other soil classification systems or for materials other than naturally occurring soils.

1.4 The values stated in inch-pound units are to be regarded as the standard.

1.5 *This standard does not purport to address all of the safety problems, if any, associated with its use. It is the responsibility of the user of this standard to establish appropriate safety and health practices and determine the applicability of regulatory limitations prior to use.* For specific precautionary statements see Section 8.

1.6 *This practice offers a set of instructions for performing one or more specific operations. This document cannot replace education or experience and should be used in conjunction with professional judgment. Not all aspects of this practice may be applicable in all circumstances. This ASTM standard is not intended to represent or replace the standard of care by which the adequacy of a given professional service must be judged, nor should this document be applied without consideration of a project's many unique aspects. The word "Standard" in the title of this document means only that the document has been approved through the ASTM consensus process.*

2. Referenced Documents

2.1 *ASTM Standards:*

D 653 Terminology Relating to Soil, Rock, and Contained Fluids[2]

D 1452 Practice for Soil Investigation and Sampling by Auger Borings[2]

D 1586 Test Method for Penetration Test and Split-Barrel Sampling of Soils[2]

D 1587 Practice for Thin-Walled Tube Sampling of Soils[2]

D 2113 Practice for Diamond Core Drilling for Site Investigation[2]

D 2487 Classification of Soils for Engineering Purposes (Unified Soil Classification System)[2]

D 3740 Practice for Minimum Requirements for Agencies Engaged in the Testing and/or Inspection of Soil and rock as Used in Engineering Design and Construction[3]

D 4083 Practice for Description of Frozen Soils (Visual-Manual Procedure)[2]

3. Terminology

3.1 *Definitions*—Except as listed below, all definitions are in accordance with Terminology D 653.

NOTE 2—For particles retained on a 3-in. (75-mm) US standard sieve, the following definitions are suggested:
Cobbles—particles of rock that will pass a 12-in. (300-mm) square opening and be retained on a 3-in. (75-mm) sieve, and
Boulders—particles of rock that will not pass a 12-in. (300-mm) square opening.

3.1.1 *clay*—soil passing a No. 200 (75-μm) sieve that can be made to exhibit plasticity (putty-like properties) within a range of water contents, and that exhibits considerable strength when air-dry. For classification, a clay is a fine-grained soil, or the

[1] This practice is under the jurisdiction of ASTM Committee D-18 on Soil and Rock and is the direct responsibility of Subcommittee D18.07 on Identification and Classification of Soils.

Current edition approved Feb. 10, 2000. Published May 2000. Originally published as D 2488 – 66 T. Last previous edition D 2488 – 93ε1.

[2] *Annual Book of ASTM Standards*, Vol 04.08.

[3] *Annual Book of ASTM Standards*, Vol 04.09.

*A Summary of Changes section appears at the end of this standard.

Copyright © ASTM International, 100 Barr Harbor Drive, PO Box C700, West Conshohocken, PA 19428-2959, United States.

fine-grained portion of a soil, with a plasticity index equal to or greater than 4, and the plot of plasticity index versus liquid limit falls on or above the "A" line (see Fig. 3 of Test Method D 2487).

3.1.2 *gravel*—particles of rock that will pass a 3-in. (75-mm) sieve and be retained on a No. 4 (4.75-mm) sieve with the following subdivisions:

coarse—passes a 3-in. (75-mm) sieve and is retained on a ¾-in. (19-mm) sieve.

fine—passes a ¾-in. (19-mm) sieve and is retained on a No. 4 (4.75-mm) sieve.

3.1.3 *organic clay*—a clay with sufficient organic content to influence the soil properties. For classification, an organic clay is a soil that would be classified as a clay, except that its liquid limit value after oven drying is less than 75 % of its liquid limit value before oven drying.

3.1.4 *organic silt*—a silt with sufficient organic content to influence the soil properties. For classification, an organic silt is a soil that would be classified as a silt except that its liquid limit value after oven drying is less than 75 % of its liquid limit value before oven drying.

3.1.5 *peat*—a soil composed primarily of vegetable tissue in various stages of decomposition usually with an organic odor, a dark brown to black color, a spongy consistency, and a texture ranging from fibrous to amorphous.

3.1.6 *sand*—particles of rock that will pass a No. 4 (4.75-mm) sieve and be retained on a No. 200 (75-µm) sieve with the following subdivisions:

coarse—passes a No. 4 (4.75-mm) sieve and is retained on a No. 10 (2.00-mm) sieve.

medium—passes a No. 10 (2.00-mm) sieve and is retained on a No. 40 (425-µm) sieve.

fine—passes a No. 40 (425-µm) sieve and is retained on a No. 200 (75-µm) sieve.

3.1.7 *silt*—soil passing a No. 200 (75-µm) sieve that is nonplastic or very slightly plastic and that exhibits little or no strength when air dry. For classification, a silt is a fine-grained soil, or the fine-grained portion of a soil, with a plasticity index less than 4, or the plot of plasticity index versus liquid limit falls below the "A" line (see Fig. 3 of Test Method D 2487).

4. Summary of Practice

4.1 Using visual examination and simple manual tests, this practice gives standardized criteria and procedures for describing and identifying soils.

4.2 The soil can be given an identification by assigning a group symbol(s) and name. The flow charts, Fig. 1a and Fig. 1b for fine-grained soils, and Fig. 2, for coarse-grained soils, can be used to assign the appropriate group symbol(s) and name. If the soil has properties which do not distinctly place it into a specific group, borderline symbols may be used, see Appendix X3.

NOTE 3—It is suggested that a distinction be made between *dual symbols* and *borderline symbols*.

Dual Symbol—A dual symbol is two symbols separated by a hyphen, for example, GP-GM, SW-SC, CL-ML used to indicate that the soil has been identified as having the properties of a classification in accordance with Test Method D 2487 where two symbols are required. Two symbols are required when the soil has between 5 and 12 % fines or when the liquid limit and plasticity index values plot in the CL-ML area of the plasticity chart.

Borderline Symbol—A borderline symbol is two symbols separated by a slash, for example, CL/CH, GM/SM, CL/ML. A borderline symbol should be used to indicate that the soil has been identified as having properties that do not distinctly place the soil into a specific group (see Appendix X3).

5. Significance and Use

5.1 The descriptive information required in this practice can be used to describe a soil to aid in the evaluation of its significant properties for engineering use.

5.2 The descriptive information required in this practice should be used to supplement the classification of a soil as determined by Test Method D 2487.

5.3 This practice may be used in identifying soils using the classification group symbols and names as prescribed in Test Method D 2487. Since the names and symbols used in this practice to identify the soils are the same as those used in Test Method D 2487, it shall be clearly stated in reports and all other appropriate documents, that the classification symbol and name are based on visual-manual procedures.

5.4 This practice is to be used not only for identification of soils in the field, but also in the office, laboratory, or wherever soil samples are inspected and described.

5.5 This practice has particular value in grouping similar soil samples so that only a minimum number of laboratory tests need be run for positive soil classification.

NOTE 4—The ability to describe and identify soils correctly is learned more readily under the guidance of experienced personnel, but it may also be acquired systematically by comparing numerical laboratory test results for typical soils of each type with their visual and manual characteristics.

5.6 When describing and identifying soil samples from a given boring, test pit, or group of borings or pits, it is not necessary to follow all of the procedures in this practice for every sample. Soils which appear to be similar can be grouped together; one sample completely described and identified with the others referred to as similar based on performing only a few of the descriptive and identification procedures described in this practice.

5.7 This practice may be used in combination with Practice D 4083 when working with frozen soils.

NOTE 5—Notwithstanding the statements on precision and bias contained in this standard: The precision of this test method is dependent on the competence of the personnel performing it and the suitability of the equipment and facilities used. Agencies that meet the criteria of Practice D 3740 are generally considered capable of competent and objective testing. Users of this test method are cautioned that compliance with Practice D 3740 does not in itself assure reliable testing. Reliable testing depends on several factors; Practice D 3740 provides a means for evaluating some of those factors.

6. Apparatus

6.1 *Required Apparatus*:

6.1.1 *Pocket Knife or Small Spatula.*

6.2 *Useful Auxiliary Apparatus*:

6.2.1 *Small Test Tube and Stopper* (or jar with a lid).

6.2.2 *Small Hand Lens.*

7. Reagents

7.1 *Purity of Water*—Unless otherwise indicated, references

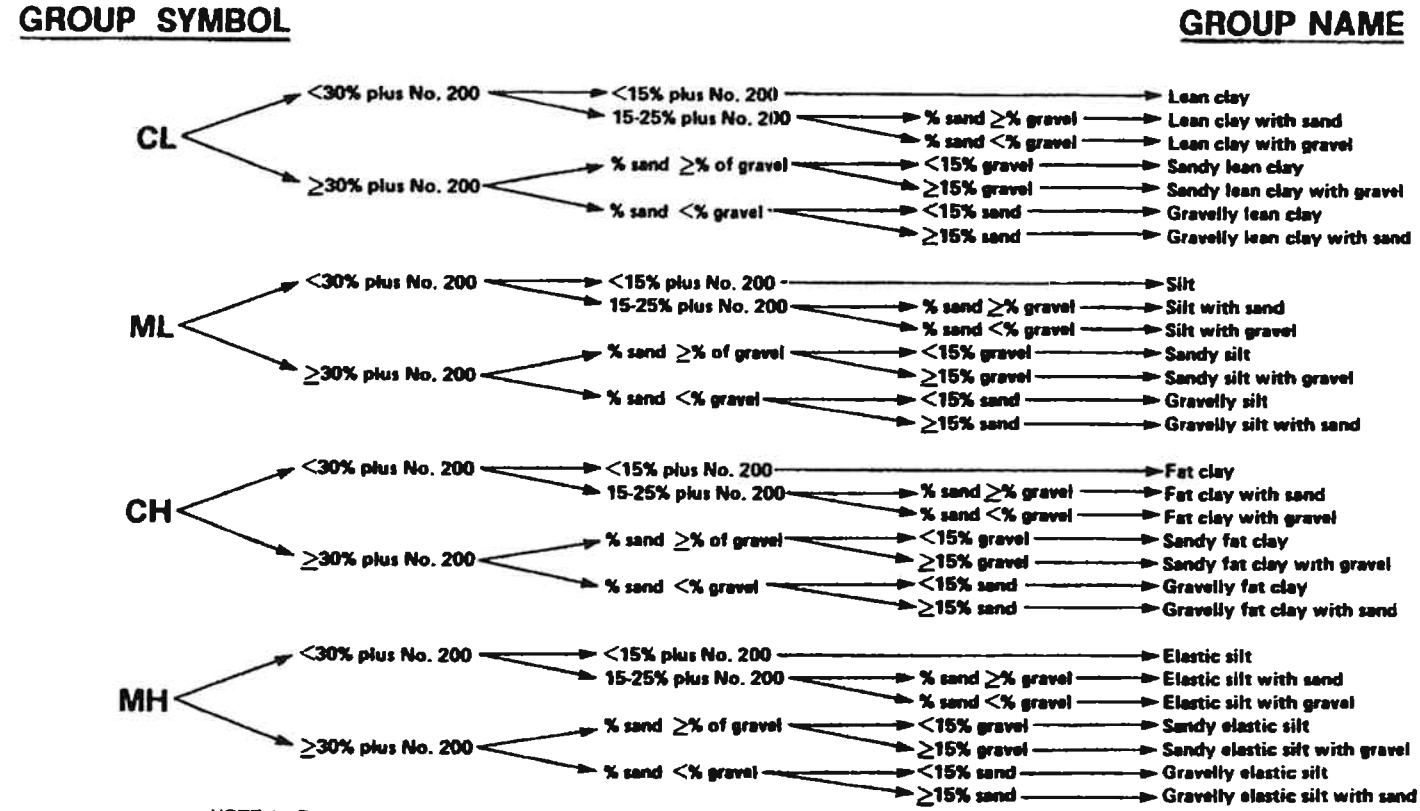

NOTE 1—Percentages are based on estimating amounts of fines, sand, and gravel to the nearest 5 %.

FIG. 1a Flow Chart for Identifying Inorganic Fine-Grained Soil (50 % or more fines)

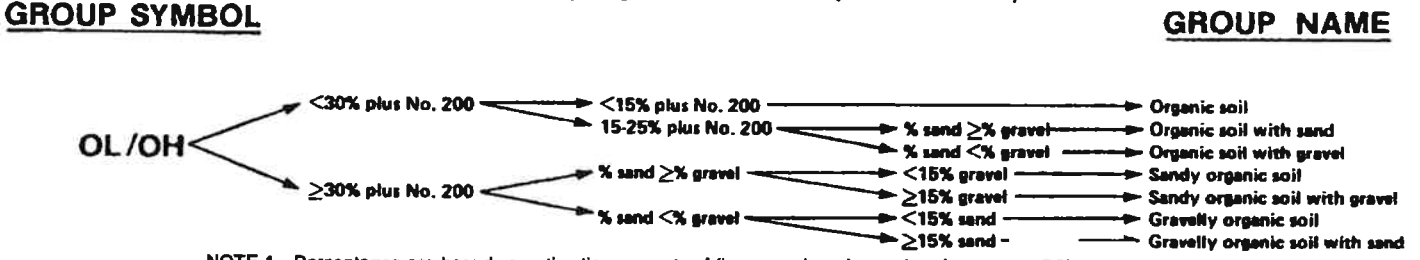

NOTE 1—Percentages are based on estimating amounts of fines, sand, and gravel to the nearest 5 %.

FIG. 1 b Flow Chart for Identifying Organic Fine-Grained Soil (50 % or more fines)

to water shall be understood to mean water from a city water supply or natural source, including non-potable water.

7.2 *Hydrochloric Acid*—A small bottle of dilute hydrochloric acid, HCl, one part HCl (10 *N*) to three parts water (This reagent is optional for use with this practice). See Section 8.

8. Safety Precautions

8.1 When preparing the dilute HCl solution of one part concentrated hydrochloric acid (10 *N*) to three parts of distilled water, slowly add acid into water following necessary safety precautions. Handle with caution and store safely. If solution comes into contact with the skin, rinse thoroughly with water.

8.2 **Caution**—Do not add water to acid.

9. Sampling

9.1 The sample shall be considered to be representative of the stratum from which it was obtained by an appropriate, accepted, or standard procedure.

NOTE 6—Preferably, the sampling procedure should be identified as having been conducted in accordance with Practices D 1452, D 1587, or D 2113, or Test Method D 1586.

9.2 The sample shall be carefully identified as to origin.

NOTE 7—Remarks as to the origin may take the form of a boring number and sample number in conjunction with a job number, a geologic stratum, a pedologic horizon or a location description with respect to a permanent monument, a grid system or a station number and offset with respect to a stated centerline and a depth or elevation.

9.3 For accurate description and identification, the minimum amount of the specimen to be examined shall be in accordance with the following schedule:

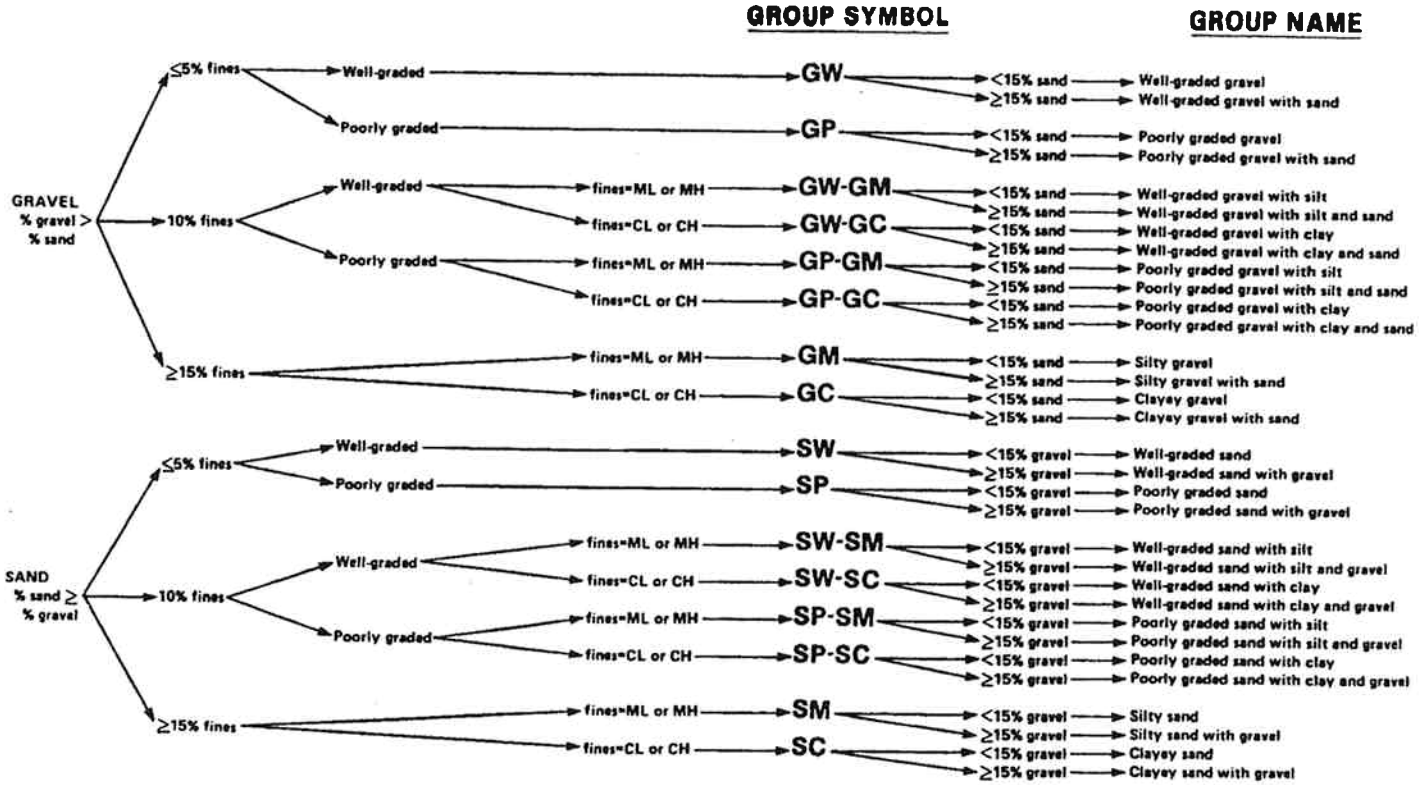

NOTE 1—Percentages are based on estimating amounts of fines, sand, and gravel to the nearest 5 %.

FIG. 2 Flow Chart for Identifying Coarse-Grained Soils (less than 50 % fines)

Maximum Particle Size, Sieve Opening	Minimum Specimen Size, Dry Weight
4.75 mm (No. 4)	100 g (0.25 lb)
9.5 mm (⅜ in.)	200 g (0.5 lb)
19.0 mm (¾ in.)	1.0 kg (2.2 lb)
38.1 mm (1½ in.)	8.0 kg (18 lb)
75.0 mm (3 in.)	60.0 kg (132 lb)

NOTE 8—If random isolated particles are encountered that are significantly larger than the particles in the soil matrix, the soil matrix can be accurately described and identified in accordance with the preceeding schedule.

9.4 If the field sample or specimen being examined is smaller than the minimum recommended amount, the report shall include an appropriate remark.

10. Descriptive Information for Soils

10.1 *Angularity*—Describe the angularity of the sand (coarse sizes only), gravel, cobbles, and boulders, as angular, subangular, subrounded, or rounded in accordance with the criteria in Table 1 and Fig. 3. A range of angularity may be stated, such as: subrounded to rounded.

10.2 *Shape*—Describe the shape of the gravel, cobbles, and boulders as flat, elongated, or flat and elongated if they meet the criteria in Table 2 and Fig. 4. Otherwise, do not mention the shape. Indicate the fraction of the particles that have the shape, such as: one-third of the gravel particles are flat.

10.3 *Color*—Describe the color. Color is an important property in identifying organic soils, and within a given locality it may also be useful in identifying materials of similar geologic origin. If the sample contains layers or patches of varying colors, this shall be noted and all representative colors shall be described. The color shall be described for moist samples. If the color represents a dry condition, this shall be stated in the report.

TABLE 1 Criteria for Describing Angularity of Coarse-Grained Particles (see Fig. 3)

Description	Criteria
Angular	Particles have sharp edges and relatively plane sides with unpolished surfaces
Subangular	Particles are similar to angular description but have rounded edges
Subrounded	Particles have nearly plane sides but have well-rounded corners and edges
Rounded	Particles have smoothly curved sides and no edges

10.4 *Odor*—Describe the odor if organic or unusual. Soils containing a significant amount of organic material usually have a distinctive odor of decaying vegetation. This is especially apparent in fresh samples, but if the samples are dried, the odor may often be revived by heating a moistened sample. If the odor is unusual (petroleum product, chemical, and the like), it shall be described.

10.5 *Moisture Condition*—Describe the moisture condition as dry, moist, or wet, in accordance with the criteria in Table 3.

10.6 *HCl Reaction*—Describe the reaction with HCl as none, weak, or strong, in accordance with the critera in Table 4. Since calcium carbonate is a common cementing agent, a report of its presence on the basis of the reaction with dilute hydrochloric acid is important.

10.7 *Consistency*—For intact fine-grained soil, describe the

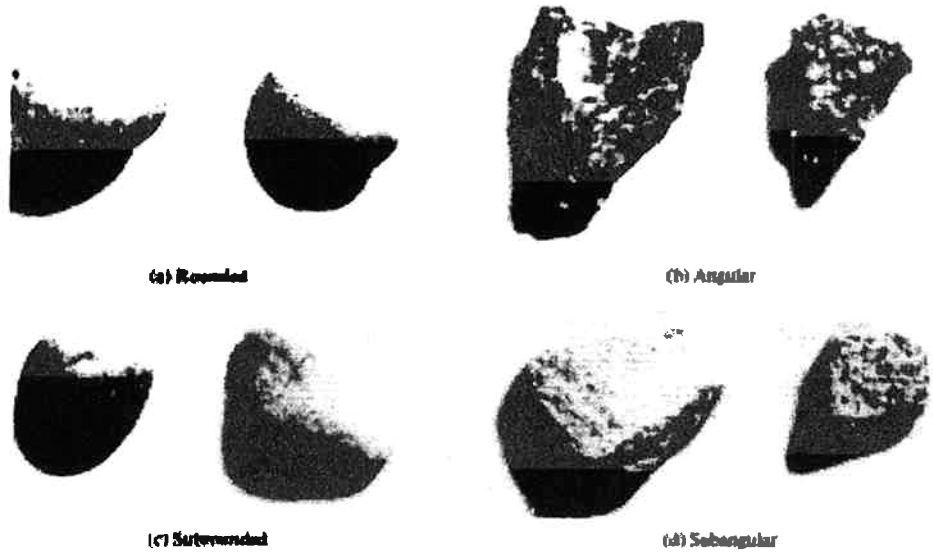

FIG. 3 Typical Angularity of Bulky Grains

TABLE 2 Criteria for Describing Particle Shape (see Fig. 4)

The particle shape shall be described as follows where length, width, and thickness refer to the greatest, intermediate, and least dimensions of a particle, respectively.

Flat	Particles with width/thickness > 3
Elongated	Particles with length/width > 3
Flat and elongated	Particles meet criteria for both flat and elongated

consistency as very soft, soft, firm, hard, or very hard, in accordance with the criteria in Table 5. This observation is inappropriate for soils with significant amounts of gravel.

10.8 *Cementation*—Describe the cementation of intact coarse-grained soils as weak, moderate, or strong, in accordance with the criteria in Table 6.

10.9 *Structure*—Describe the structure of intact soils in accordance with the criteria in Table 7.

10.10 *Range of Particle Sizes*—For gravel and sand components, describe the range of particle sizes within each component as defined in 3.1.2 and 3.1.6. For example, about 20 % fine to coarse gravel, about 40 % fine to coarse sand.

10.11 *Maximum Particle Size*—Describe the maximum particle size found in the sample in accordance with the following information:

10.11.1 *Sand Size*—If the maximum particle size is a sand size, describe as fine, medium, or coarse as defined in 3.1.6. For example: maximum particle size, medium sand.

10.11.2 *Gravel Size*—If the maximum particle size is a gravel size, describe the maximum particle size as the smallest sieve opening that the particle will pass. For example, maximum particle size, 1½ in. (will pass a 1½-in. square opening but not a ¾-in. square opening).

10.11.3 *Cobble or Boulder Size*—If the maximum particle size is a cobble or boulder size, describe the maximum dimension of the largest particle. For example: maximum dimension, 18 in. (450 mm).

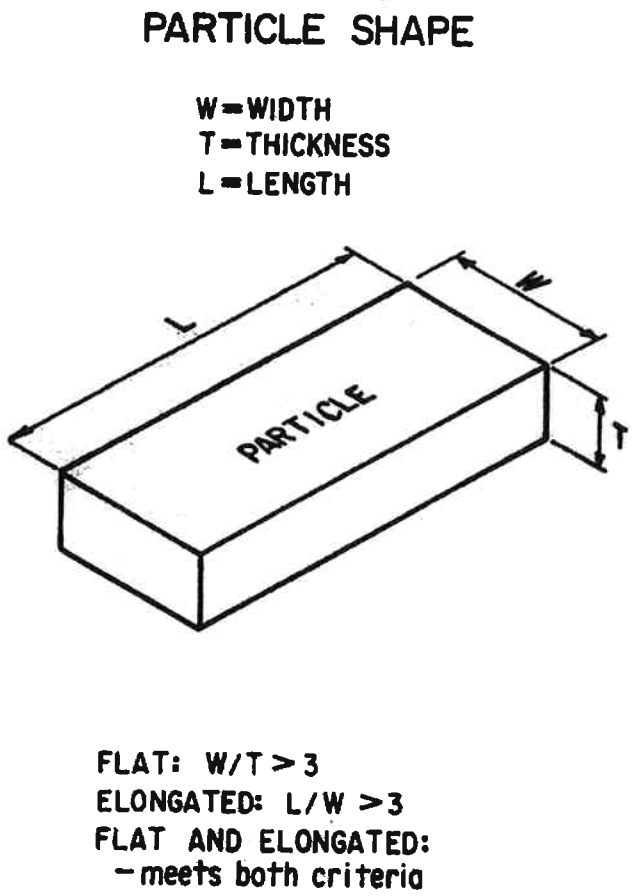

FIG. 4 Criteria for Particle Shape

10.12 *Hardness*—Describe the hardness of coarse sand and larger particles as hard, or state what happens when the

TABLE 3 Criteria for Describing Moisture Condition

Description	Criteria
Dry	Absence of moisture, dusty, dry to the touch
Moist	Damp but no visible water
Wet	Visible free water, usually soil is below water table

TABLE 4 Criteria for Describing the Reaction With HCl

Description	Criteria
None	No visible reaction
Weak	Some reaction, with bubbles forming slowly
Strong	Violent reaction, with bubbles forming immediately

TABLE 5 Criteria for Describing Consistency

Description	Criteria
	Thumb will penetrate soil more than 1 in. (25 mm)
	Thumb will penetrate soil about 1 in. (25 mm)
	Thumb will indent soil about ¼in. (6 mm)
	Thumb will not indent soil but readily indented with thumbnail
Very hard	Thumbnail will not indent soil

TABLE 6 Criteria for Describing Cementation

Description	Criteria
Weak	Crumbles or breaks with handling or little finger pressure
Moderate	Crumbles or breaks with considerable finger pressure
Strong	Will not crumble or break with finger pressure

TABLE 7 Criteria for Describing Structure

Description	Criteria
Stratified	Alternating layers of varying material or color with layers at least 6 mm thick; note thickness
Laminated	Alternating layers of varying material or color with the layers less than 6 mm thick; note thickness
Fissured	Breaks along definite planes of fracture with little resistance to fracturing
Slickensided	Fracture planes appear polished or glossy, sometimes striated
Blocky	Cohesive soil that can be broken down into small angular lumps which resist further breakdown
Lensed	Inclusion of small pockets of different soils, such as small lenses of sand scattered through a mass of clay; note thickness
Homogeneous	Same color and appearance throughout

particles are hit by a hammer, for example, gravel-size particles fracture with considerable hammer blow, some gravel-size particles crumble with hammer blow. "Hard" means particles do not crack, fracture, or crumble under a hammer blow.

10.13 Additional comments shall be noted, such as the presence of roots or root holes, difficulty in drilling or augering hole, caving of trench or hole, or the presence of mica.

10.14 A local or commercial name or a geologic interpretation of the soil, or both, may be added if identified as such.

10.15 A classification or identification of the soil in accordance with other classification systems may be added if identified as such.

11. Identification of Peat

11.1 A sample composed primarily of vegetable tissue in various stages of decomposition that has a fibrous to amorphous texture, usually a dark brown to black color, and an organic odor, shall be designated as a highly organic soil and shall be identified as peat, PT, and not subjected to the identification procedures described hereafter.

12. Preparation for Identification

12.1 The soil identification portion of this practice is based on the portion of the soil sample that will pass a 3-in. (75-mm) sieve. The larger than 3-in. (75-mm) particles must be removed, manually, for a loose sample, or mentally, for an intact sample before classifying the soil.

12.2 Estimate and note the percentage of cobbles and the percentage of boulders. Performed visually, these estimates will be on the basis of volume percentage.

NOTE 9—Since the percentages of the particle-size distribution in Test Method D 2487 are by dry weight, and the estimates of percentages for gravel, sand, and fines in this practice are by dry weight, it is recommended that the report state that the percentages of cobbles and boulders are by volume.

12.3 Of the fraction of the soil smaller than 3 in. (75 mm), estimate and note the percentage, by dry weight, of the gravel, sand, and fines (see Appendix X4 for suggested procedures).

NOTE 10—Since the particle-size components appear visually on the basis of volume, considerable experience is required to estimate the percentages on the basis of dry weight. Frequent comparisons with laboratory particle-size analyses should be made.

12.3.1 The percentages shall be estimated to the closest 5 %. The percentages of gravel, sand, and fines must add up to 100 %.

12.3.2 If one of the components is present but not in sufficient quantity to be considered 5 % of the smaller than 3-in. (75-mm) portion, indicate its presence by the term *trace*, for example, trace of fines. A trace is not to be considered in the total of 100 % for the components.

13. Preliminary Identification

13.1 The soil is *fine grained* if it contains 50 % or more fines. Follow the procedures for identifying fine-grained soils of Section 14.

13.2 The soil is *coarse grained* if it contains less than 50 % fines. Follow the procedures for identifying coarse-grained soils of Section 15.

14. Procedure for Identifying Fine-Grained Soils

14.1 Select a representative sample of the material for examination. Remove particles larger than the No. 40 sieve (medium sand and larger) until a specimen equivalent to about a handful of material is available. Use this specimen for performing the dry strength, dilatancy, and toughness tests.

14.2 *Dry Strength*:

14.2.1 From the specimen, select enough material to mold into a ball about 1 in. (25 mm) in diameter. Mold the material until it has the consistency of putty, adding water if necessary.

14.2.2 From the molded material, make at least three test specimens. A test specimen shall be a ball of material about ½ in. (12 mm) in diameter. Allow the test specimens to dry in air, or sun, or by artificial means, as long as the temperature does not exceed 60°C.

14.2.3 If the test specimen contains natural dry lumps, those that are about ½ in. (12 mm) in diameter may be used in place of the molded balls.

NOTE 11—The process of molding and drying usually produces higher strengths than are found in natural dry lumps of soil.

14.2.4 Test the strength of the dry balls or lumps by crushing between the fingers. Note the strength as none, low, medium, high, or very high in accorance with the criteria in Table 8. If natural dry lumps are used, do not use the results of any of the lumps that are found to contain particles of coarse sand.

14.2.5 The presence of high-strength water-soluble cementing materials, such as calcium carbonate, may cause exceptionally high dry strengths. The presence of calcium carbonate can usually be detected from the intensity of the reaction with dilute hydrochloric acid (see 10.6).

14.3 *Dilatancy*:

14.3.1 From the specimen, select enough material to mold into a ball about ½ in. (12 mm) in diameter. Mold the material, adding water if necessary, until it has a soft, but not sticky, consistency.

14.3.2 Smooth the soil ball in the palm of one hand with the blade of a knife or small spatula. Shake horizontally, striking the side of the hand vigorously against the other hand several times. Note the reaction of water appearing on the surface of the soil. Squeeze the sample by closing the hand or pinching the soil between the fingers, and note the reaction as none, slow, or rapid in accordance with the criteria in Table 9. The reaction is the speed with which water appears while shaking, and disappears while squeezing.

14.4 *Toughness*:

14.4.1 Following the completion of the dilatancy test, the test specimen is shaped into an elongated pat and rolled by hand on a smooth surface or between the palms into a thread about ⅛ in. (3 mm) in diameter. (If the sample is too wet to roll easily, it should be spread into a thin layer and allowed to lose some water by evaporation.) Fold the sample threads and reroll repeatedly until the thread crumbles at a diameter of about ⅛ in. The thread will crumble at a diameter of ⅛ in. when the soil is near the plastic limit. Note the pressure required to roll the thread near the plastic limit. Also, note the strength of the thread. After the thread crumbles, the pieces should be lumped together and kneaded until the lump crumbles. Note the toughness of the material during kneading.

14.4.2 Describe the toughness of the thread and lump as low, medium, or high in accordance with the criteria in Table 10.

TABLE 8 Criteria for Describing Dry Strength

Description	Criteria
	The dry specimen crumbles into powder with mere pressure of handling
	The dry specimen crumbles into powder with some finger pressure
	The dry specimen breaks into pieces or crumbles with considerable finger pressure
	The dry specimen cannot be broken with finger pressure. Specimen will break into pieces between thumb and a hard surface
Very high	The dry specimen cannot be broken between the thumb and a hard surface

TABLE 9 Criteria for Describing Dilatancy

Description	Criteria
None	No visible change in the specimen
Slow	Water appears slowly on the surface of the specimen during shaking and does not disappear or disappears slowly upon squeezing
Rapid	Water appears quickly on the surface of the specimen during shaking and disappears quickly upon squeezing

14.5 *Plasticity*—On the basis of observations made during the toughness test, describe the plasticity of the material in accordance with the criteria given in Table 11.

14.6 Decide whether the soil is an *inorganic* or an *organic* fine-grained soil (see 14.8). If inorganic, follow the steps given in 14.7.

14.7 *Identification of Inorganic Fine-Grained Soils*:

14.7.1 Identify the soil as a *lean clay*, CL, if the soil has medium to high dry strength, no or slow dilatancy, and medium toughness and plasticity (see Table 12).

14.7.2 Identify the soil as a *fat clay*, CH, if the soil has high to very high dry strength, no dilatancy, and high toughness and plasticity (see Table 12).

14.7.3 Identify the soil as a *silt*, ML, if the soil has no to low dry strength, slow to rapid dilatancy, and low toughness and plasticity, or is nonplastic (see Table 12).

14.7.4 Identify the soil as an *elastic silt*, MH, if the soil has low to medium dry strength, no to slow dilatancy, and low to medium toughness and plasticity (see Table 12).

NOTE 12—These properties are similar to those for a lean clay. However, the silt will dry quickly on the hand and have a smooth, silky feel when dry. Some soils that would classify as MH in accordance with the criteria in Test Method D 2487 are visually difficult to distinguish from lean clays, CL. It may be necessary to perform laboratory testing for proper identification.

14.8 *Identification of Organic Fine-Grained Soils*:

14.8.1 Identify the soil as an *organic soil*, OL/OH, if the soil contains enough organic particles to influence the soil properties. Organic soils usually have a dark brown to black color and may have an organic odor. Often, organic soils will change color, for example, black to brown, when exposed to the air. Some organic soils will lighten in color significantly when air dried. Organic soils normally will not have a high toughness or plasticity. The thread for the toughness test will be spongy.

NOTE 13—In some cases, through practice and experience, it may be possible to further identify the organic soils as organic silts or organic clays, OL or OH. Correlations between the dilatancy, dry strength, toughness tests, and laboratory tests can be made to identify organic soils in certain deposits of similar materials of known geologic origin.

TABLE 10 Criteria for Describing Toughness

Description	Criteria
	Only slight pressure is required to roll the thread near the plastic limit. The thread and the lump are weak and soft
Medium	Medium pressure is required to roll the thread to near the plastic limit. The thread and the lump have medium stiffness
High	Considerable pressure is required to roll the thread to near the plastic limit. The thread and the lump have very high stiffness

TABLE 11 Criteria for Describing Plasticity

Description	Criteria
Nonplastic	A ⅛-in. (3-mm) thread cannot be rolled at any water content
Low	The thread can barely be rolled and the lump cannot be formed when drier than the plastic limit
Medium	The thread is easy to roll and not much time is required to reach the plastic limit. The thread cannot be rerolled after reaching the plastic limit. The lump crumbles when drier than the plastic limit
High	It takes considerable time rolling and kneading to reach the plastic limit. The thread can be rerolled several times after reaching the plastic limit. The lump can be formed without crumbling when drier than the plastic limit

TABLE 12 Identification of Inorganic Fine-Grained Soils from Manual Tests

Soil Symbol	Dry Strength	Dilatancy	Toughness
ML	None to low	Slow to rapid	Low or thread cannot be formed
CL	Medium to high	None to slow	Medium
MH	Low to medium	None to slow	Low to medium
CH	High to very high	None	High

14.9 If the soil is estimated to have 15 to 25 % sand or gravel, or both, the words "with sand" or "with gravel" (whichever is more predominant) shall be added to the group name. For example: "lean clay with sand, CL" or "silt with gravel, ML" (see Fig. 1a and Fig. 1b). If the percentage of sand is equal to the percentage of gravel, use "with sand."

14.10 If the soil is estimated to have 30 % or more sand or gravel, or both, the words "sandy" or "gravelly" shall be added to the group name. Add the word "sandy" if there appears to be more sand than gravel. Add the word "gravelly" if there appears to be more gravel than sand. For example: "sandy lean clay, CL", "gravelly fat clay, CH", or "sandy silt, ML" (see Fig. 1a and Fig. 1b). If the percentage of sand is equal to the percent of gravel, use "sandy."

15. Procedure for Identifying Coarse-Grained Soils

(Contains less than 50 % fines)

15.1 The soil is a *gravel* if the percentage of gravel is estimated to be more than the percentage of sand.

15.2 The soil is a *sand* if the percentage of gravel is estimated to be equal to or less than the percentage of sand.

15.3 The soil is a *clean gravel* or *clean sand* if the percentage of fines is estimated to be 5 % or less.

15.3.1 Identify the soil as a *well-graded gravel*, GW, or as a *well-graded sand*, SW, if it has a wide range of particle sizes and substantial amounts of the intermediate particle sizes.

15.3.2 Identify the soil as a *poorly graded gravel*, GP, or as a *poorly graded sand*, SP, if it consists predominantly of one size (uniformly graded), or it has a wide range of sizes with some intermediate sizes obviously missing (gap or skip graded).

15.4 The soil is either a *gravel with fines* or a *sand with fines* if the percentage of fines is estimated to be 15 % or more.

15.4.1 Identify the soil as a *clayey gravel*, GC, or a *clayey sand*, SC, if the fines are clayey as determined by the procedures in Section 14.

15.4.2 Identify the soil as a *silty gravel*, GM, or a *silty sand*, SM, if the fines are silty as determined by the procedures in Section 14.

15.5 If the soil is estimated to contain 10 % fines, give the soil a dual identification using two group symbols.

15.5.1 The first group symbol shall correspond to a clean gravel or sand (GW, GP, SW, SP) and the second symbol shall correspond to a gravel or sand with fines (GC, GM, SC, SM).

15.5.2 The group name shall correspond to the first group symbol plus the words "with clay" or "with silt" to indicate the plasticity characteristics of the fines. For example: "well-graded gravel with clay, GW-GC" or "poorly graded sand with silt, SP-SM" (see Fig. 2).

15.6 If the specimen is predominantly sand or gravel but contains an estimated 15 % or more of the other coarse-grained constituent, the words "with gravel" or "with sand" shall be added to the group name. For example: "poorly graded gravel with sand, GP" or "clayey sand with gravel, SC" (see Fig. 2).

15.7 If the field sample contains any cobbles or boulders, or both, the words "with cobbles" or "with cobbles and boulders" shall be added to the group name. For example: "silty gravel with cobbles, GM."

16. Report

16.1 The report shall include the information as to origin, and the items indicated in Table 13.

NOTE 14—*Example: Clayey Gravel with Sand and Cobbles, GC*—About 50 % fine to coarse, subrounded to subangular gravel; about 30 % fine to coarse, subrounded sand; about 20 % fines with medium plasticity, high dry strength, no dilatancy, medium toughness; weak reaction with HCl; original field sample had about 5 % (by volume) subrounded cobbles, maximum dimension, 150 mm.

In-Place Conditions—Firm, homogeneous, dry, brown

Geologic Interpretation—Alluvial fan

TABLE 13 Checklist for Description of Soils

1. Group name
2. Group symbol
3. Percent of cobbles or boulders, or both (by volume)
4. Percent of gravel, sand, or fines, or all three (by dry weight)
5. Particle-size range:
   Gravel—fine, coarse
   Sand—fine, medium, coarse
6. Particle angularity: angular, subangular, subrounded, rounded
7. Particle shape: (if appropriate) flat, elongated, flat and elongated
8. Maximum particle size or dimension
9. Hardness of coarse sand and larger particles
10. Plasticity of fines: nonplastic, low, medium, high
11. Dry strength: none, low, medium, high, very high
12. Dilatancy: none, slow, rapid
13. Toughness: low, medium, high
14. Color (in moist condition)
15. Odor (mention only if organic or unusual)
16. Moisture: dry, moist, wet
17. Reaction with HCl: none, weak, strong

For intact samples:

18. Consistency (fine-grained soils only): very soft, soft, firm, hard, very hard
19. Structure: stratified, laminated, fissured, slickensided, lensed, homogeneous
20. Cementation: weak, moderate, strong
21. Local name
22. Geologic interpretation
23. Additional comments: presence of roots or root holes, presence of mica, gypsum, etc., surface coatings on coarse-grained particles, caving or sloughing of auger hole or trench sides, difficulty in augering or excavating, etc.

NOTE 15—Other examples of soil descriptions and identification are given in Appendix X1 and Appendix X2.

NOTE 16—If desired, the percentages of gravel, sand, and fines may be stated in terms indicating a range of percentages, as follows:

Trace—Particles are present but estimated to be less than 5 %
Few—5 to 10 %
Little—15 to 25 %
Some—30 to 45 %
Mostly—50 to 100 %

16.2 If, in the soil description, the soil is identified using a classification group symbol and name as described in Test Method D 2487, it must be distinctly and clearly stated in log forms, summary tables, reports, and the like, that the symbol and name are based on visual-manual procedures.

17. Precision and Bias

17.1 This practice provides qualitative information only, therefore, a precision and bias statement is not applicable.

18. Keywords

18.1 classification; clay; gravel; organic soils; sand; silt; soil classification; soil description; visual classification

APPENDIXES

(Nonmandatory Information)

X1. EXAMPLES OF VISUAL SOIL DESCRIPTIONS

X1.1 The following examples show how the information required in 16.1 can be reported. The information that is included in descriptions should be based on individual circumstances and need.

X1.1.1 *Well-Graded Gravel with Sand (GW)*—About 75 % fine to coarse, hard, subangular gravel; about 25 % fine to coarse, hard, subangular sand; trace of fines; maximum size, 75 mm, brown, dry; no reaction with HCl.

X1.1.2 *Silty Sand with Gravel (SM)*—About 60 % predominantly fine sand; about 25 % silty fines with low plasticity, low dry strength, rapid dilatancy, and low toughness; about 15 % fine, hard, subrounded gravel, a few gravel-size particles fractured with hammer blow; maximum size, 25 mm; no reaction with HCl (Note—Field sample size smaller than recommended).

In-Place Conditions—Firm, stratified and contains lenses of silt 1 to 2 in. (25 to 50 mm) thick, moist, brown to gray; in-place density 106 lb/ft^3; in-place moisture 9 %.

X1.1.3 *Organic Soil (OL/OH)*—About 100 % fines with low plasticity, slow dilatancy, low dry strength, and low toughness; wet, dark brown, organic odor; weak reaction with HCl.

X1.1.4 *Silty Sand with Organic Fines (SM)*—About 75 % fine to coarse, hard, subangular reddish sand; about 25 % organic and silty dark brown nonplastic fines with no dry strength and slow dilatancy; wet; maximum size, coarse sand; weak reaction with HCl.

X1.1.5 *Poorly Graded Gravel with Silt, Sand, Cobbles and Boulders (GP-GM)*—About 75 % fine to coarse, hard, subrounded to subangular gravel; about 15 % fine, hard, subrounded to subangular sand; about 10 % silty nonplastic fines; moist, brown; no reaction with HCl; original field sample had about 5 % (by volume) hard, subrounded cobbles and a trace of hard, subrounded boulders, with a maximum dimension of 18 in. (450 mm).

X2. USING THE IDENTIFICATION PROCEDURE AS A DESCRIPTIVE SYSTEM FOR SHALE, CLAYSTONE, SHELLS, SLAG, CRUSHED ROCK, AND THE LIKE

X2.1 The identification procedure may be used as a descriptive system applied to materials that exist in-situ as shale, claystone, sandstone, siltstone, mudstone, etc., but convert to soils after field or laboratory processing (crushing, slaking, and the like).

X2.2 Materials such as shells, crushed rock, slag, and the like, should be identified as such. However, the procedures used in this practice for describing the particle size and plasticity characteristics may be used in the description of the material. If desired, an identification using a group name and symbol according to this practice may be assigned to aid in describing the material.

X2.3 The group symbol(s) and group names should be placed in quotation marks or noted with some type of distinguishing symbol. See examples.

X2.4 Examples of how group names and symbols can be incororated into a descriptive system for materials that are not naturally occurring soils are as follows:

X2.4.1 *Shale Chunks*—Retrieved as 2 to 4-in. (50 to 100-mm) pieces of shale from power auger hole, dry, brown, no reaction with HCl. After slaking in water for 24 h, material identified as "Sandy Lean Clay (CL)"; about 60 % fines with medium plasticity, high dry strength, no dilatancy, and medium toughness; about 35 % fine to medium, hard sand; about 5 % gravel-size pieces of shale.

X2.4.2 *Crushed Sandstone*—Product of commercial crushing operation; "Poorly Graded Sand with Silt (SP-SM)"; about 90 % fine to medium sand; about 10 % nonplastic fines; dry, reddish-brown, strong reaction with HCl.

X2.4.3 *Broken Shells*—About 60 % gravel-size broken

shells; about 30 % sand and sand-size shell pieces; about 10 % fines; "Poorly Graded Gravel with Sand (GP)."

X2.4.4 *Crushed Rock*—Processed from gravel and cobbles in Pit No. 7; "Poorly Graded Gravel (GP)"; about 90 % fine, hard, angular gravel-size particles; about 10 % coarse, hard, angular sand-size particles; dry, tan; no reaction with HCl.

X3. SUGGESTED PROCEDURE FOR USING A BORDERLINE SYMBOL FOR SOILS WITH TWO POSSIBLE IDENTIFICATIONS.

X3.1 Since this practice is based on estimates of particle size distribution and plasticity characteristics, it may be difficult to clearly identify the soil as belonging to one category. To indicate that the soil may fall into one of two possible basic groups, a borderline symbol may be used with the two symbols separated by a slash. For example: SC/CL or CL/CH.

X3.1.1 A borderline symbol may be used when the percentage of fines is estimated to be between 45 and 55 %. One symbol should be for a coarse-grained soil with fines and the other for a fine-grained soil. For example: GM/ML or CL/SC.

X3.1.2 A borderline symbol may be used when the percentage of sand and the percentage of gravel are estimated to be about the same. For example: GP/SP, SC/GC, GM/SM. It is practically impossible to have a soil that would have a borderline symbol of GW/SW.

X3.1.3 A borderline symbol may be used when the soil could be either well graded or poorly graded. For example: GW/GP, SW/SP.

X3.1.4 A borderline symbol may be used when the soil could either be a silt or a clay. For example: CL/ML, CH/MH, SC/SM.

X3.1.5 A borderline symbol may be used when a fine-grained soil has properties that indicate that it is at the boundary between a soil of low compressibility and a soil of high compressibility. For example: CL/CH, MH/ML.

X3.2 The order of the borderline symbols should reflect similarity to surrounding or adjacent soils. For example: soils in a borrow area have been identified as CH. One sample is considered to have a borderline symbol of CL and CH. To show similarity, the borderline symbol should be CH/CL.

X3.3 The group name for a soil with a borderline symbol should be the group name for the first symbol, except for:

CL/CH lean to fat clay
ML/CL clayey silt
CL/ML silty clay

X3.4 The use of a borderline symbol should not be used indiscriminately. Every effort shall be made to first place the soil into a single group.

X4. SUGGESTED PROCEDURES FOR ESTIMATING THE PERCENTAGES OF GRAVEL, SAND, AND FINES IN A SOIL SAMPLE

X4.1 *Jar Method*—The relative percentage of coarse- and fine-grained material may be estimated by thoroughly shaking a mixture of soil and water in a test tube or jar, and then allowing the mixture to settle. The coarse particles will fall to the bottom and successively finer particles will be deposited with increasing time; the sand sizes will fall out of suspension in 20 to 30 s. The relative proportions can be estimated from the relative volume of each size separate. This method should be correlated to particle-size laboratory determinations.

X4.2 *Visual Method*—Mentally visualize the gravel size particles placed in a sack (or other container) or sacks. Then, do the same with the sand size particles and the fines. Then, mentally compare the number of sacks to estimate the percentage of plus No. 4 sieve size and minus No. 4 sieve size present. The percentages of sand and fines in the minus sieve size No. 4 material can then be estimated from the wash test (X4.3).

X4.3 *Wash Test (for relative percentages of sand and fines)*—Select and moisten enough minus No. 4 sieve size material to form a 1-in (25-mm) cube of soil. Cut the cube in half, set one-half to the side, and place the other half in a small dish. Wash and decant the fines out of the material in the dish until the wash water is clear and then compare the two samples and estimate the percentage of sand and fines. Remember that the percentage is based on weight, not volume. However, the volume comparison will provide a reasonable indication of grain size percentages.

X4.3.1 While washing, it may be necessary to break down lumps of fines with the finger to get the correct percentages.

X5. ABBREVIATED SOIL CLASSIFICATION SYMBOLS

X5.1 In some cases, because of lack of space, an abbreviated system may be useful to indicate the soil classification symbol and name. Examples of such cases would be graphical logs, databases, tables, etc.

X5.2 This abbreviated system is not a substitute for the full name and descriptive information but can be used in supplementary presentations when the complete description is referenced.

X5.3 The abbreviated system should consist of the soil classification symbol based on this standard with appropriate lower case letter prefixes and suffixes as:

Prefix:	Suffix:
s = sandy	s = with sand
g = gravelly	g = with gravel
	c = with cobbles
	b = with boulders

X5.4 The soil classification symbol is to be enclosed in parenthesis. Some examples would be:

Group Symbol and Full Name	Abbreviated
CL, Sandy lean clay	s(CL)
SP-SM, Poorly graded sand with silt and gravel	(SP-SM)g
GP, poorly graded gravel with sand, cobbles, and boulders	(GP)scb
ML, gravelly silt with sand and cobbles	g(ML)sc

SUMMARY OF CHANGES

In accordance with Committee D18 policy, this section identifies the location of changes to this standard since the last edition (1993$^{\epsilon 1}$) that may impact the use of this standard.

(1) Added Practice D 3740 to Section 2.

(2) Added Note 5 under 5.7 and renumbered subsequent notes.

ASTM International takes no position respecting the validity of any patent rights asserted in connection with any item mentioned in this standard. Users of this standard are expressly advised that determination of the validity of any such patent rights, and the risk of infringement of such rights, are entirely their own responsibility.

This standard is subject to revision at any time by the responsible technical committee and must be reviewed every five years and if not revised, either reapproved or withdrawn. Your comments are invited either for revision of this standard or for additional standards and should be addressed to ASTM International Headquarters. Your comments will receive careful consideration at a meeting of the responsible technical committee, which you may attend. If you feel that your comments have not received a fair hearing you should make your views known to the ASTM Committee on Standards, at the address shown below.

This standard is copyrighted by ASTM International, 100 Barr Harbor Drive, PO Box C700, West Conshohocken, PA 19428-2959, United States. Individual reprints (single or multiple copies) of this standard may be obtained by contacting ASTM at the above address or at 610-832-9585 (phone), 610-832-9555 (fax), or service@astm.org (e-mail); or through the ASTM website (www.astm.org).

APPENDIX D

Filter Sock Specification

FLT116 PIG® Drain Insert Plus

Product Data Sheet

Item Number: FLT116

Item Name: PIG® Drain Insert Plus − For oil and sediment • skirting accumulation pocket 10" dia x 18" D

Absorbency

•1.4 gal./each (5.3 L/each)

Options Available											
Item #	Size	Color	Misc. Features	Amount	Length	Width	Height	Depth	Int. Dia.	Ext. Dia.	Weight
FLT116	—	—	—	1 each	36" (91.4cm)	48" (121.9cm)	—	—	—	—	2lbs. (.9kg)

Color: Grey

Per Pallet: 100

Description

A permeable, hydrophilic drain insert skirting with sediment accumulation pocket and absorbent recycled synthetic media strips to absorb floating hydrocarbons which is designed to fit rectangular storm drains up to 30" x 40" and round drains up to 30" in diameter.

Application

Used as a Best Management Practice and as part of your Stormwater Pollution Prevention plan to help keep hydrocarbons and sediment from entering the water system. Designed to be used for 3 to 6 months under normal conditions.

Product Features

- Keeps sediment and debris out of your drains
- Inserts fits rectangular storm drains up to 30" x 40" in size and round drains up to 30" in diameter
- 18" deep accumulation pocket collects oil, sediment and other contaminants
- Filter strips remove floating oil and other hydrocarbons
- Designed with excess flow port to avoid blockage during periods of high water flow

Composition

- Recycled synthetic material

This product helps you comply with:	
Regulatory Citation	Summary
40 CFR 122.26	When applying for a National Pollutant Discharge Elimination System (NPDES) permit, facilities must have a plan in place that describes actions, procedures, control techniques, management practices and equipment available to prevent illegal discharge of pollutants into waterways.

Additional Specifications

- permeability : .25 cm/sec

- micron rating : 181 microns nominal
- uv resistance : 70% @ 500 hrs
- water flow rate : Total 500 gpm with product in new condition
- overflow rate : Approximately 750 gpm
- fabric weight : 9 oz. per square yard

New Pig • One Pork Avenue • Tipton, PA 16684-0304 • www.newpig.com
Phone 1-800-HOT-HOGS®(468-4647) • Fax 1-800-621-7447 • E-mail hothogs@newpig.com

PDS generated: Oct 10, 2005

APPENDIX E

DEQ BMP Guidance on Storm Drain Inlet Protection[1]

[1] Source: Appendix F of the Oregon Department of Environmental Quality's Statewide Erosion and Sediment Control Manual, April 28, 2005.

STORM DRAIN INLET PROTECTION – SC-8

Construction Specifications:

Identify existing and/or planned storm drain inlets that have the potential to receive sediment-laden surface runoff. Determine if storm drain inlet protection is needed, and which method to use.

Methods and Installation

- DI Protection Type 1 - Filter Fabric Fence - The filter fabric fence (Type 1) protection is illustrated on Page 3. Similar to constructing a sediment fence. See BMP SC-1, "Sediment Fence." Do not place filter fabric underneath the inlet grate since the collected sediment may fall into the drain inlet when the fabric is removed or replaced.
- DI Protection Type 2 - Excavated Drop Inlet Sediment Trap - The excavated drop inlet sediment trap (Type 2) is illustrated in Page 4. Similar to constructing a temporary sediment fence, See BMP SC-1, "Sediment Fence." Size excavated trap to provide a minimum storage capacity calculated at the rate of 67 yd^3/ac (130 m^3/ha) of drainage area.
- DI Protection Type 3 – Gravel bag - The gravel bag barrier (Type 3) is illustrated in Page 5. Flow from a severe storm shall not overtop the curb. In areas of high clay and silts, use filter fabric and gravel as additional filter media. Construct gravel bags in accordance with BMP SC-3, "Gravel Bag Berm." Gravel bags shall be used due to their high permeability.
- DI Protection Type 4 –Fiber Rolls – Fiber roll (Type 4) is placed around the inlet and keyed and anchored to the surface similar to SC-7 ("Fiber Rolls") installation. Fiber rolls are intended for use as inlet protection where the area around the inlet is unpaved and the fiber roll can be secured to the surface. On impervious surfaces use weighted or gravel-filled fiber rolls in the same configuration as specified above or as specified by the manufacturer. Type 4 DI protection functions similarly to Types 1 and 2.

Minimum BMP standards are provided on the following details. The DI Protection (Types 1-4) as illustrated was not designed to significantly inhibit flow and cause flooding. If flooding problems occur, modify the existing BMP to alleviate flooding. Do not remove the BMP and allow sediment-laden water to discharge to the storm drain.

Alternative methods may be substituted for the methods described/shown herein such as prefabricated inlet insert devices, or gutter protection devices based on review and approval by DEQ or the local agency as submitted in the project ESCP. Typical installation details for Siltsack™ inserts and biofilter bags are included with this BMP.

Inspection and Maintenance:

General

- Inspect all inlet protection devices before and after every rain event, and at the frequencies recommended by local municipalities. During extended rain events, inspect inlet protection devices at least once every 24 hours.
- Inspect the storm drain inlet after severe storms in the rainy season to check for bypassed material.
- Remove all inlet protection devices after the site is stabilized, or when the inlet protection is no longer needed.
    - Bring the disturbed area to final grade and smooth and compact it. Appropriately stabilize all bare areas around the inlet.
    - Clean and re-grade area around the inlet and clean the inside of the storm drain inlet as it must be free of sediment and debris at the time of final inspection.

STORM DRAIN INLET PROTECTION – SC-8

Requirements by Method

- Type 1 - Filter Fabric Fence
  - This method shall be used for drain inlets requiring protection in areas where finished grade is established and erosion control seeding has been applied or is pending.
  - Make sure the stakes are securely driven in the ground and are structurally sound (i.e., not bent, cracked, or splintered, and are reasonably perpendicular to the ground). Replace damaged stakes.
  - Replace or clean the fabric when the fabric becomes clogged with sediment. Make sure the fabric does not have any holes or tears. Repair or replace fabric as needed.
  - At a minimum, remove the sediment behind the fabric fence when accumulation reaches one-third the height of the fence or barrier height. Removed sediment shall be incorporated in the project or disposed of properly.
- Type 2 – Excavated Drop Inlet Sediment Trap
  - This method may be used for drain inlets requiring protection in areas that have been cleared and grubbed, and where exposed soil areas are subject to grading.
  - Remove sediment from basin when the volume of the basin has been reduced by one-half.
- Type 3 - Gravel Bag Barrier
  - This method may be used for drain inlets surrounded by asphalt concrete (AC) or paved surfaces.
  - Inspect bags for holes, gashes, and snags.
  - Check gravel bags for proper arrangement and displacement. Remove the sediment behind the barrier when it reaches one-third the height of the barrier. Removed sediment shall be incorporated in the project or disposed of properly
- Type 4 Fiber Rolls
  - This method may be used for drain inlets requiring protection in areas that have been cleared and grubbed, and where exposed soil areas subject to grading.
  - Use weighted or gravel-filled fiber rolls on impervious surfaces. Check that fiber rolls are in good contact with the surface without gaps or preferential flow paths.
  - Check fiber roll for proper arrangement and displacement. Remove the sediment behind the barrier when it reaches one-third the height of the barrier. Removed sediment shall be incorporated in the project or disposed of properly.

STORM DRAIN INLET PROTECTION – SC-8

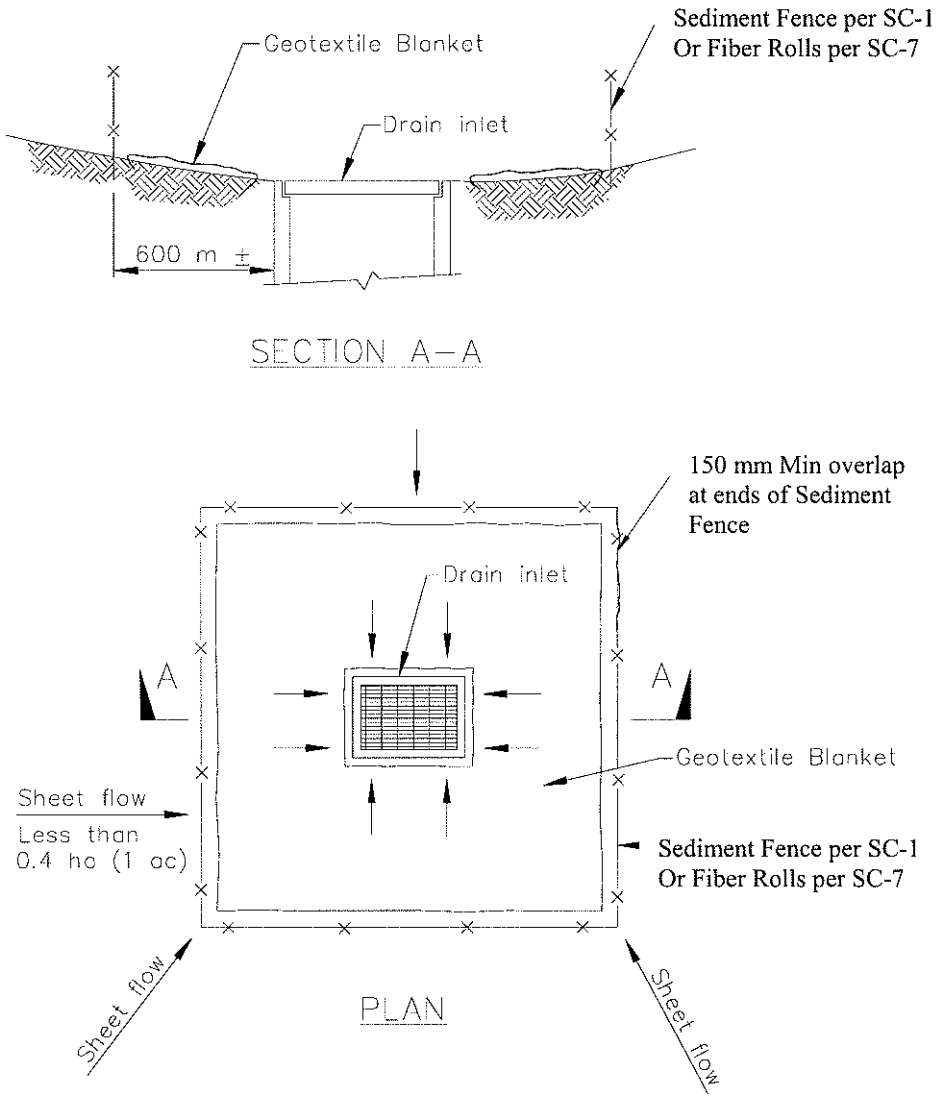

DI PROTECTION TYPE 1 AND TYPE 4
Not to scale

NOTES:

1. For use in areas where grading has been completed and final soil stabilization and seeding are pending.
2. Not applicable in paved areas.
3. Not applicable with concentrated flows.

STORM DRAIN INLET PROTECTION – SC-8

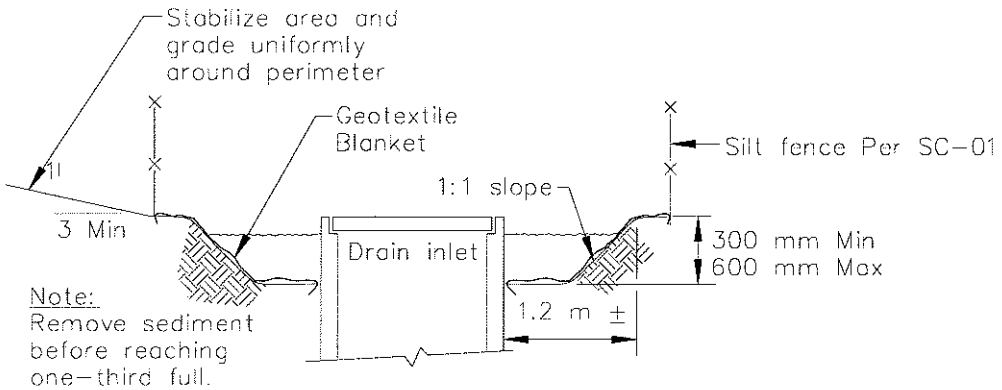

Section A–A

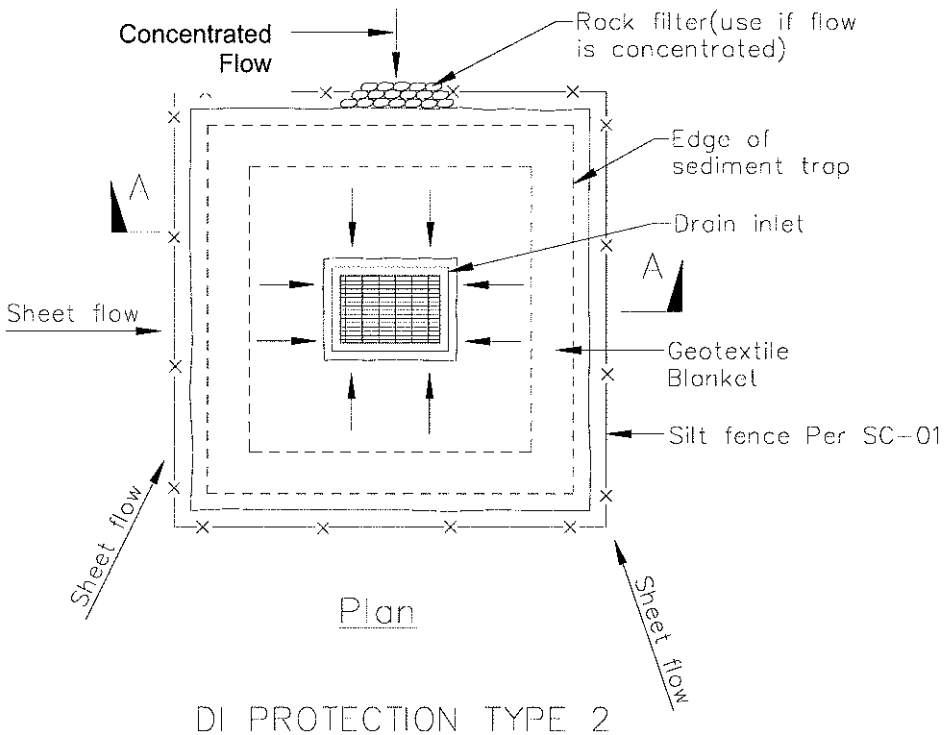

Plan

DI PROTECTION TYPE 2
NOT TO SCALE

Notes
1. For use in cleared and grubbed and in graded areas.
2. Shape basin so that longest inflow area faces longest length of trap.
3. For concentrated flows, shape basin in 2:1 ratio with length oriented towards direction of flow.

STORM DRAIN INLET PROTECTION – SC-8

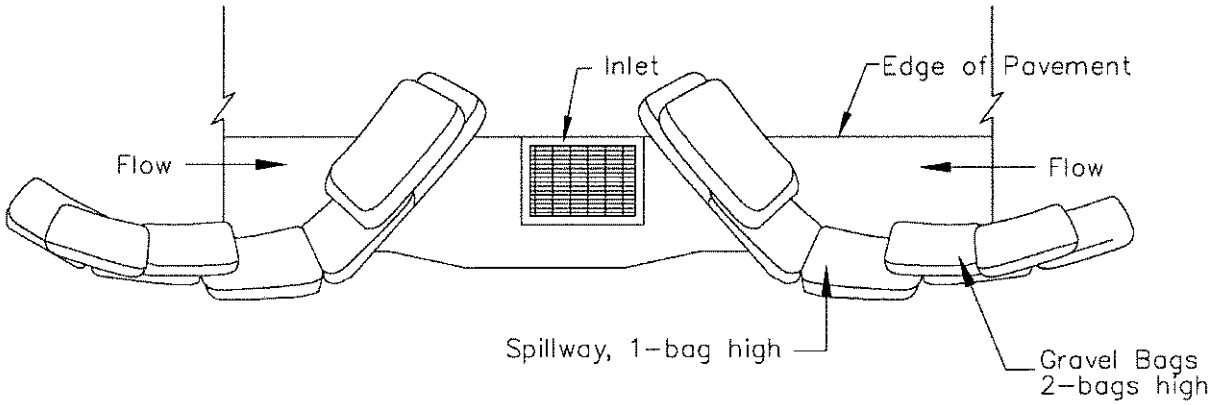

TYPICAL PROTECTION FOR INLET WITH OPPOSING FLOW DIRECTIONS

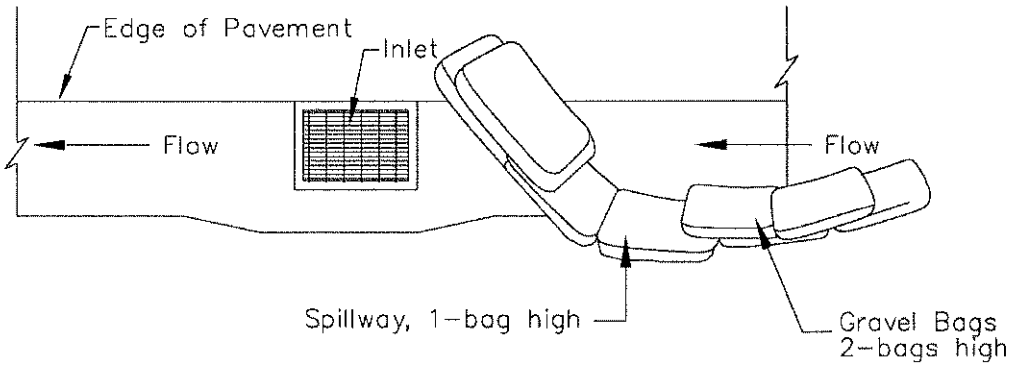

TYPICAL PROTECTION FOR INLET WITH SINGLE FLOW DIRECTION

NOTES:

1. Intended for short-term use.
2. Use to inhibit non-storm water flow.
3. Allow for proper maintenance and cleanup.
4. Bags must be removed after adjacent operation is completed
5. Not applicable in areas with high silts and clays without filter fabric.

STORM DRAIN INLET PROTECTION – SC-8

Typical Siltsack® Construction

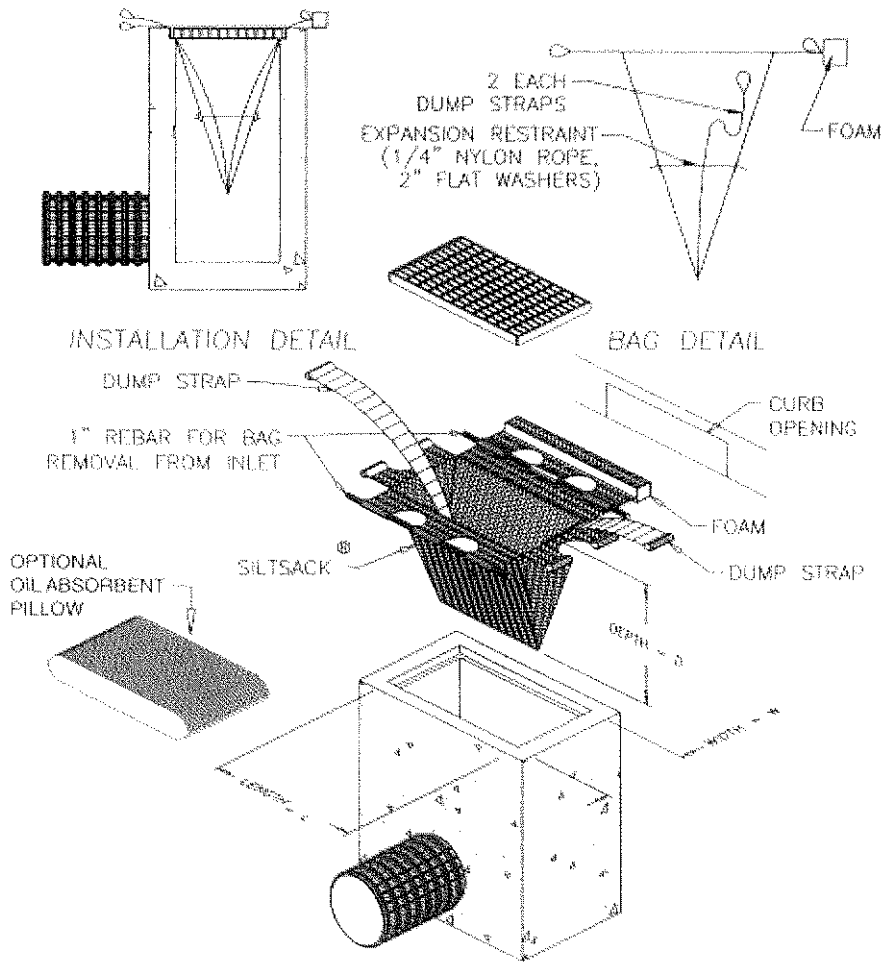

STORM DRAIN INLET PROTECTION – SC-8

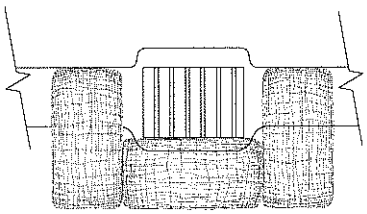

CATCH BASIN

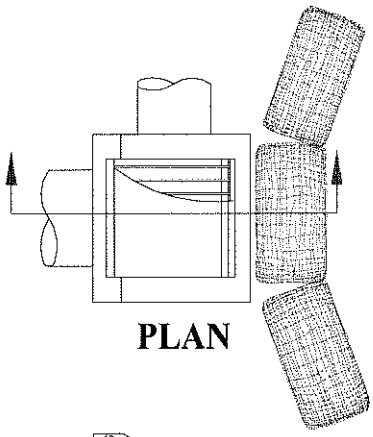

PLAN

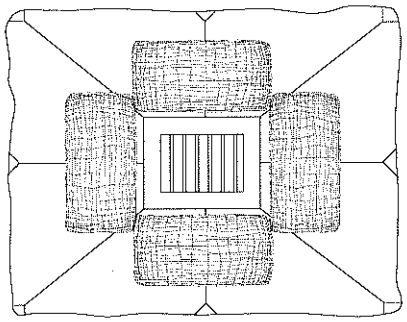

AREA DRAIN

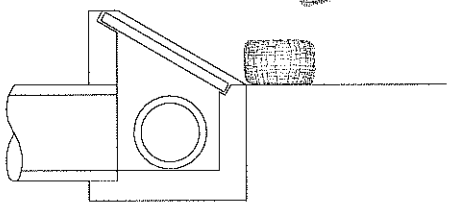

DITCH INLET

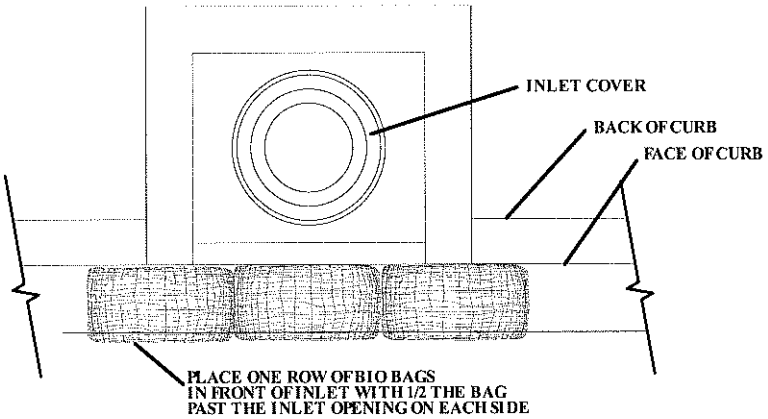

CURB INLET CATCH BASIN
BIO BAG INLET PROTECTION

NTS

APPENDIX F

Sampling Documentation Examples

OUTFALL SAMPLE COLLECTION FORM

Station ID _____ Project Name:

Sample No. _____ Project Number:

Date _____ Collector:

Field Parameters

pH	Temperature	Conductivity	D.O.	Comments
_____	_____	_____	_____	_____

Sampling Device

Filter:

Sample Containers Collection Time_____

Tag No.	Type		Preservative	Analytical Method	QA Remarks
	☐Amber	☐Poly			
	☐Amber	☐Poly			
	☐Amber	☐Poly			
	☐Amber	☐Poly			
	☐Amber	☐Poly			
	☐Amber	☐Poly			
	☐Amber	☐Poly			
	☐Amber	☐Poly			
	☐Amber	☐Poly			

Comments

Sample Location Sketch

Samplers' Signature_____ Date _____

integral consulting inc.

Sample Label

Site: _____

Sample No.: _____

Matrix: _____ Date: _____

Filtered (Y/N): _____ Time: _____
(if applicable)

Analysis: _____ Pres: _____
(optional)

Sampler: _____

Tag Number: I 1813

Custody Seal

CUSTODY SEAL

Date: _____ *Time:* _____

Sampler Signature: _____

"Outdoor writing products for outdoor writing people."

RECYCLABLE

"Rite in the Rain" - A unique All-Weather Writing paper created to shed water and enhance the written image. It is widely used throughout the world for recording critical field data in all kinds of weather.

Available in a variety of standard and custom printed case-bound field books, loose leaf, spiral and stapled notebooks, multi-copy sets and copier paper.

For best results, use a pencil or an all-weather pen.

a product of

J. L. DARLING CORPORATION
Tacoma, WA 98424-1017 USA
(253) 922-5000 • FAX (253) 922-5300
www.RiteintheRain.com

NSN: 7530-01-433-5654

6 32281 31111 9

"Rite in the Rain"®
ALL-WEATHER WRITING PAPER

LEVEL

All-Weather Notebook
No. 311

4 5/8" x 7" - 48 Numbered Pages

CHAIN OF CUSTODY FORM

0060

Page __ of __

Project: _____

Samplers: _____

Integral Contact: _____
Office _____
Phone _____

Ship to: Lab Name _____
Address _____
_____
_____
Contact _____
Phone _____

integral consulting inc.

Sample No.	Tag No.	Date	Time	Matrix	ANALYSES REQUESTED						Extra Container	Archive	Comments

Analysis Turn Time: Normal Rush **Rush Results Needed By:**

Shipped by: **Shipping Tracking No.**

Condition of Samples Upon Receipt: **Custody Seal Intact?**

Matrix Code: GW - Groundwater
SL - Soil SW - Surface water
SD -Sediment Other:

Relinquished by: _____ (signature) **Date/Time:** _____ **Received by:** _____ (signature) **Date/Time:** _____

Relinquished by: _____ (signature) **Date/Time:** _____ **Received by:** _____ (signature) **Date/Time:** _____

Special Instructions:

Seattle
1500 112th Avenue NE, STE 101
Bellevue, WA 98004

Portland
2817 NE 22nd Avenue
Portland, OR 97223

Boulder
1320 Pearl Street, STE 210
Boulder, CO 80021